DEPARTMENT OF THE AIR FORCE
377TH AIR BASE WING (AFGSC)

JUN 14 2017

Colonel Eric H. Froehlich
Commander
377th Air Base Wing
2000 Wyoming Blvd SE
Kirtland AFB NM 87117-5000

Mr. John Kieling, Bureau Chief
Hazardous Waste Bureau (HWB)
New Mexico Environment Department (NMED)
2905 Rodeo Park Drive East, Building 1
Santa Fe NM 87505-6303

Dear Mr. Kieling

Please find the attached *Construction Completion Report* associated with the Bulk Fuels Facility Spill interim measure at Solid Waste Management Unit ST-106/SS-111, Kirtland Air Force Base, New Mexico. This report has been prepared to summarize expansion activities at the Groundwater Treatment System associated with the groundwater capture and treatment system at ST 106/SS-111.

If you have any questions or concerns, please contact Mr. Scott Clark at (505) 846-9017 or at scott.clark@us.af.mil or Dr. Adria Bodour at (210) 241-6276 or at adria.bodour.1@us.af.mil.

Sincerely

ERIC H. FROEHLICH, Colonel, USAF
Commander

Attachment:
Construction Completion Report 2 Hard Copies/2 CDs
cc:
NMED (Borrego) letter
NMED GWQB (Agnew, Hunter), letter and CD
EPA Region 6 (King), letter and CD
SAF-IEE (Lynnes), electronic only
AFCEC/CZ (Bodour, Clark, O'Grady), electronic only
USACE-ABQ District Office (Simpler, Phaneuf, Dreeland, Sanchez, Salazar), electronic only
Public Info Repository, Administrative Record/Information Repository (AR/IR) and File

RECEIVED
JUN 16 2017
NMED Hazardous Waste Bureau

KAFB4533

DEPARTMENT OF THE AIR FORCE
377TH AIR BASE WING (AFGSC)

JUN 14 2017

Colonel Eric H. Froehlich
Commander
377th Air Base Wing
2000 Wyoming Blvd SE
Kirtland AFB NM 87117-5000

Mr. John Kieling, Bureau Chief
Hazardous Waste Bureau (HWB)
New Mexico Environment Department (NMED)
2905 Rodeo Park Drive East, Building 1
Santa Fe NM 87505-6303

Dear Mr. Kieling

Please find the attached *Construction Completion Report* associated with the Bulk Fuels Facility Spill interim measure at Solid Waste Management Unit ST-106/SS-111, Kirtland Air Force Base, New Mexico. This report has been prepared to summarize expansion activities at the Groundwater Treatment System associated with the groundwater capture and treatment system at ST 106/SS-111.

If you have any questions or concerns, please contact Mr. Scott Clark at (505) 846-9017 or at scott.clark@us.af.mil or Dr. Adria Bodour at (210) 241-6276 or at adria.bodour.1@us.af.mil.

Sincerely

ERIC H. FROEHLICH, Colonel, USAF
Commander

Attachment:
Construction Completion Report 2 Hard Copies/2 CDs
cc:
NMED (Borrego) letter
NMED GWQB (Agnew, Hunter), letter and CD
EPA Region 6 (King), letter and CD
SAF-IEE (Lynnes), electronic only
AFCEC/CZ (Bodour, Clark, O'Grady), electronic only
USACE-ABQ District Office (Simpler, Phaneuf, Dreeland, Sanchez, Salazar), electronic only
Public Info Repository, Administrative Record/Information Repository (AR/IR) and File

KIRTLAND AIR FORCE BASE
ALBUQUERQUE, NEW MEXICO

CONSTRUCTION COMPLETION REPORT FOR THE BULK FUELS FACILITY GROUNDWATER TREATMENT SYSTEM EXPANSION SOLID WASTE MANAGEMENT UNIT ST-106/SS-111

June 2017

377 MSG/CEI
2050 Wyoming Boulevard Southeast
Kirtland Air Force Base, New Mexico 87117-5270

KIRTLAND AIR FORCE BASE
ALBUQUERQUE, NEW MEXICO

CONSTRUCTION COMPLETION REPORT FOR THE BULK FUELS FACILITY GROUNDWATER TREATMENT SYSTEM EXPANSION SOLID WASTE MANAGEMENT UNIT ST-106/SS-111

June 2017

Prepared for
U.S. Army Corps of Engineers
Albuquerque District
4101 Jefferson Plaza NE
Albuquerque, New Mexico 87109-3435

Prepared by
EA Engineering, Science, and Technology, Inc., PBC
320 Gold Avenue SW, Suite 1300
Albuquerque, New Mexico 87102
Contract No. W912DR-12-D-0006
Delivery Order DM01

NOTICE

This Construction Completion Report was prepared for the U.S. Army Corps of Engineers by EA Engineering, Science, and Technology, Inc., PBC for the purpose of expanding the current groundwater treatment system for containment of the dissolved-phase ethylene dibromide (EDB; also known as 1,2-dibromoethane) plume associated with the Kirtland Air Force Base (AFB) Bulk Fuels Facility, Solid Waste Management Unit ST-106/SS-111. This work is performed under the U.S. Air Force Environmental Restoration Program, under requirements set forth in the Resource Conservation and Recovery Act permit issued to Kirtland AFB, with the New Mexico Environment Department serving as the lead regulatory agency. This Construction Completion Report describes the expansion of a groundwater treatment system that will extract, convey, treat, and discharge groundwater from the EDB plume.

Government agencies and their contractors registered with the Defense Technical Information Center should direct requests for copies of this report to: Defense Technical Information Center, Cameron Station, Alexandria, Virginia 22304-6145.

Non-government agencies may purchase copies of this document from: National Technical Information Service, 5285 Port Royal Road, Springfield, Virginia 22161.

REPORT DOCUMENTATION PAGE

Form Approved
OMB No. 0704-0188

Public reporting burden for this collection of information is estimated to average 1 hour per response, including the time for reviewing instructions, searching existing data sources, gathering and maintaining the data needed, and completing and reviewing this collection of information. Send comments regarding this burden estimate or any other aspect of this collection of information, including suggestions for reducing this burden to Department of Defense, Washington Headquarters Services, Directorate for Information Operations and Reports (0704-0188), 1215 Jefferson Davis Highway, Suite 1204, Arlington, VA 22202-4302. Respondents should be aware that notwithstanding any other provision of law, no person shall be subject to any penalty for failing to comply with a collection of information if it does not display a currently valid OMB control number. **PLEASE DO NOT RETURN YOUR FORM TO THE ABOVE ADDRESS.**

1. REPORT DATE *(DD-MM-YYYY)*	**2. REPORT TYPE**	**3. DATES COVERED** *(From - To)*
05-06-2017	Final	22-09-2016 – 06-03-2017

4. TITLE AND SUBTITLE
Construction Completion Report for the Bulk Fuels Facility
Groundwater Treatment System Expansion
Solid Waste Management Unit ST-106/SS-111
Kirtland Air Force Base, New Mexico

5a. CONTRACT NUMBER
W912DR-12-D-0006

5b. GRANT NUMBER

5c. PROGRAM ELEMENT NUMBER

6. AUTHOR(S)
EA Engineering, Science, and Technology, Inc., PBC

5d. PROJECT NUMBER
62599DM01

5e. TASK NUMBER
DM01

5f. WORK UNIT NUMBER
Not applicable

7. PERFORMING ORGANIZATION NAME(S) AND ADDRESS(ES)

AND ADDRESS(ES)
EA Engineering, Science, and Technology, Inc., PBC
320 Gold Avenue SW, Suite 1300
Albuquerque, New Mexico 87102

8. PERFORMING ORGANIZATION REPORT NUMBER
Not assigned

9. SPONSORING / MONITORING AGENCY NAME(S) AND ADDRESS(ES)

U.S. Army Corps of Engineers–Albuquerque District
4101 Jefferson Plaza NE
Albuquerque, New Mexico 87109-3435

10. SPONSOR/MONITOR'S ACRONYM(S)

11. SPONSOR/MONITOR'S REPORT NUMBER(S)

12. DISTRIBUTION / AVAILABILITY STATEMENT

13. SUPPLEMENTARY NOTES

14. ABSTRACT

This Construction Completion Report describes the expansion of a groundwater treatment system (GWTS) associated with the Bulk Fuels Facility site at Solid Waste Management Unit ST-106/SS 111, located on the Kirtland Air Force Base (AFB), New Mexico, as part of an interim measure for remediation of the off-Base portion of the dissolved-phase ethylene dibromide (EDB) groundwater plume. Groundwater is pumped from wells located to the west of the Base to a treatment facility located on-Base, treated to remove EDB and any other volatile organic compounds by carbon adsorption, and then discharged either to the Tijeras Arroyo Golf Course main pond or the gravity injection well KAFB-7. The GWTS was designed to ultimately extract and treat 800 gallons per minute (gpm) of groundwater, but was initially outfitted with equipment capable of treating up to 400 gpm. This project included expansion of the GWTS facility via construction of a second treatment train to increase the treatment capacity of the system to the designed 800 gpm, and implementation of design modifications to the existing GWTS components. Actions taken to complete this expansion included installation of the two 6,000-gallon tanks (TK-210 and TK-216), two equipment skids (one equipment skid with pumps P-212A/B and one equipment skid with pump P-218), and two carbon filtration vessels (V-214A/B, carbon steel treatment system piping). Additional items included electrical and control equipment, painting of treatment system piping and pipe supports, and approved modifications to treatment system equipment.

15. SUBJECT TERMS
Construction Completion Report, Kirtland AFB, Bulk Fuels Facility, ethylene dibromide, dissolved-phase plume, extraction wells, GWTS, and Solid Waste Management Unit ST-106/SS-111, Interim Measure

16. SECURITY CLASSIFICATION OF:			**17. LIMITATION OF ABSTRACT**	**18. NUMBER OF PAGES**	**19a. NAME OF RESPONSIBLE PERSON**
a. REPORT	**b. ABSTRACT**	**c. THIS PAGE**			Devon E. Jercinovic
UNCLASSIFIED	UNCLASSIFIED	UNCLASSIFIED	ABSTRACT	4009	**19b. TELEPHONE NUMBER** *(include area code)* 505-715-4248

Standard Form 298
(Rev. 8-98) **Prescribed by ANSI Std. Z39.18**

40 CFR 270.11
DOCUMENT CERTIFICATION

I certify under penalty of law that this document and all attachments were prepared under my direction or supervision according to a system designed to assure that qualified personnel properly gather and evaluate the information submitted. Based on my inquiry of the person or persons who manage the system, or those persons directly responsible for gathering the information, the information submitted is, to the best of my knowledge and belief, true, accurate, and complete. I am aware that there are significant penalties for submitting false information, including the possibility of fines and imprisonment for knowing violations.

ERIC H. FROEHLICH, Colonel, U.S. Air Force
Commander, 377th Air Base Wing

13 JUN 17
Date

This document has been approved for public release.

KIRTLAND AIR FORCE BASE
377th Air Base Wing Public Affairs

14 JUN 17
Date

PREFACE

This Construction Completion Report is prepared by EA Engineering, Science, and Technology, Inc., PBC (EA) for the U.S. Army Corps of Engineers (USACE), under Contract Number W912DR-12-D-0006, Delivery Order DM01 and pertains to expanding the groundwater treatment system (GWTS) that was installed as an Interim Measure to address the Kirtland Air Force Base (AFB) Bulk Fuels Facility (BFF) site at Solid Waste Management Unit ST-106/SS-111. The BFF site is located in Albuquerque, New Mexico. This Construction Completion Report was prepared in accordance with the permit issued to Kirtland AFB under the Resource Conservation and Recovery Act and applicable federal, state, and local laws and regulations.

The objective for this Construction Completion Report is to detail the activities that were performed to expand the current GWTS facility for containment of the dissolved-phase ethylene dibromide (EDB) plume associated with the BFF site. Groundwater is pumped from wells located to the west of the Base to a treatment facility located on-Base, treated to remove EDB and any other volatile organic compounds by carbon adsorption, and then discharged either to the Tijeras Arroyo Golf Course main pond or gravity injection well KAFB-7. The GWTS was designed to ultimately extract and treat 800 gallons per minute (gpm) of groundwater, but was initially outfitted with equipment capable of treating up to 400 gpm. This project included expansion of the GWTS facility via construction of a second treatment train to increase the treatment capacity of the system to the designed 800 gpm, and implementation of design modifications to the existing GWTS components.

This Construction Completion Report details the activities that were performed between September 22, 2016 and March 6, 2017. Mr. Trent Simpler, PE, is the USACE–Albuquerque District Project Manager. The Environmental Restoration Section Chief for this program is Mr. Scott Clark of Kirtland AFB. The Construction Completion Report was prepared by Devon Jercinovic, PG, CPG, PMP; Lucas Rief, PE; Kevin McKeage; and Lee Becker, PE of EA, with Devon Jercinovic as the EA Project Manager.

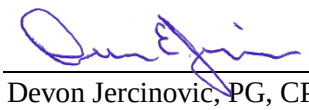

Devon Jercinovic, PG, CPG, PMP
Project Manager
EA Engineering, Science, and Technology, Inc., PBC

CONTENTS

Section **Page**

EXECUTIVE SUMMARY ES-1

1. INTRODUCTION 1-1

1.1 SITE DESCRIPTION AND PROJECT BACKGROUND 1-1
1.2 PROJECT OBJECTIVES 1-2
1.3 REPORT ORGANIZATION 1-2

2. PROJECT ACTIVITIES 2-1

2.1 MOBILIZATION AND SITE SETUP 2-1
2.2 EQUIPMENT 2-1
2.3 PIPE AND PIPE SUPPORTS 2-2
2.4 INSTRUMENTATION MODIFICATIONS 2-2
2.5 ELECTRICAL 2-3
2.6 PAINT AND FINISHES 2-3
2.7 CONTROLS 2-4
2.8 SUBSTANTIAL COMPLETION 2-4
2.9 SYSTEM STARTUP AND SHAKEDOWN 2-4

3. QUALITY CONTROL 3-1

3.1 CONSTRUCTION QUALITY CONTROL PLAN 3-1
3.2 THREE PHASES OF CONTROL 3-1
3.3 PROJECT RECORDS 3-2
3.4 SUBMITTAL REVIEW AND APPROVAL 3-3
3.5 MATERIALS RECEIVING AND DOCUMENTATION 3-3
3.6 QUALITY CONTROL TESTING 3-3
3.7 PUNCH LISTS 3-4
3.8 VARIANCES AND NONCONFORMANCE 3-4
3.9 SITE PHOTOGRAPHS 3-4

4. SUMMARY AND CONCLUSION 4-1

REFERENCES R-1

APPENDICES

A Quality Control Records, Miscellaneous Reports, and Correspondence
Attachment 1: Preparatory-Phase Meeting Minutes
Attachment 2: Daily Construction Quality Management Reports
Attachment 3: Testing Documentation
Attachment 4: Punch Lists
Attachment 5: Additional Safety Documentation

B Submittals
Attachment 1: Engineer-Approved Submittals
Attachment 2: Closeout Submittals

C Record Drawings

D Warranties

FIGURES

1-1 Site Map

ACRONYMS AND ABBREVIATIONS

AFB	Air Force Base
BFF	Bulk Fuels Facility
CB&I	CB&I Federal Services, LLC
CCR	Construction Completion Report
CFR	Code of Federal Regulations
CQCP	Construction Quality Control Plan
EA	EA Engineering, Science, and Technology, Inc., PBC
EDB	ethylene dibromide
gpm	gallon(s) per minute
GWTS	groundwater treatment system
HMI	human machine interface
I&CS	I&C Solutions LLC
NMED	New Mexico Environment Department
No.	number
QC	quality control
Rupert	Rupert Plumbing and Heating, Inc.
Site	Bulk Fuels Facility site
SWMU	Solid Waste Management Unit
USACE	U.S. Army Corps of Engineers

EXECUTIVE SUMMARY

This Construction Completion Report (CCR) has been prepared by EA Engineering, Science, and Technology, Inc., PBC (EA) to address activities performed at Solid Waste Management Unit (SWMU) ST-106/SS-111, the Bulk Fuels Facility (BFF) at Kirtland Air Force Base (AFB).

The objective for this CCR is to detail the activities that were performed to expand the current groundwater treatment system (GWTS) facility for containment of the dissolved-phase ethylene dibromide (EDB) plume associated with the BFF site. Groundwater is pumped from wells located to the west of the Base to a treatment facility located on-Base, treated to remove EDB and any other volatile organic compounds by carbon adsorption, and then discharged either to the Tijeras Arroyo Golf Course main pond or the gravity injection well KAFB-7. The GWTS was designed to ultimately extract and treat 800 gallons per minute (gpm) of groundwater, but was initially outfitted with equipment capable of treating up to 400 gpm. This project included expansion of the GWTS facility via construction of a second treatment train to increase the treatment capacity of the system to the designed 800 gpm, and implementation of design modifications to the existing GWTS components.

Actions taken to complete this expansion included installation of the two 6,000-gallon tanks (TK-210 and TK-216), two equipment skids (one equipment skid with pumps P-212A/B, and one equipment skid with pump P-218), and two carbon filtration vessels (V-214A/B, carbon steel treatment system piping). Additional items included electrical and control equipment, painting of treatment system piping and pipe supports, and approved modifications to treatment system equipment. The work completed for this project is described in the following sections:

- ***Section 1***—Presents an introduction to the project, a site description and background to the project, overview of the project objectives, and organization of the CCR.

- ***Section 2***—Presents the major activities completed during construction with milestone dates and significant details, including mobilization and site setup, equipment delivery, installation of pipes and pipe supports, instrumentation electrical components, paint and finishes, controls, substantial completion, and system startup and shakedown.

- ***Section 3***—Presents the quality control (QC) measures used during construction including three phases of control, project records, submittal review and approval, materials receiving and documentation, QC testing, substantial completion punch lists, and site photographs.

- ***Section 4***—Presents a summary of the project and conclusion stating the project has been completed.

The GWTS expansion has been completed in accordance with the contract drawings and technical specifications and EA considers this CCR and the work that it describes to be complete.

1. INTRODUCTION

Under Contract Number (No.) W912DR-12-D-0006, Delivery Order DM01, EA was contracted to perform tasks for the U.S. Army Corps of Engineers (USACE) associated with expanding the GWTS at SWMU ST-106/SS-111, at Kirtland AFB, New Mexico as part of an interim measure for remediation of the off-Base portion of the dissolved-phase EDB (a fuel additive) groundwater plume (Figure 1-1). This SWMU is known as the BFF site (Site). Environmental restoration efforts at the Site are being conducted under requirements set forth in the Resource Conservation and Recovery Act Permit No. NM9570024423 with the New Mexico Environment Department (NMED) serving as the lead regulatory agency (NMED, 2010). This CCR describes the expansion of a GWTS that will extract, convey, treat, and discharge groundwater from the EDB plume. Work for this project was completed in accordance with the Work Plan for the BFF Expansion of the Dissolved-Phase Plume GWTS Design SWMU ST-106/SS-111 (USACE, 2016a).

1.1 Site Description and Project Background

Kirtland AFB is located in Bernalillo County, in central New Mexico, southeast of and adjacent to the City of Albuquerque and Albuquerque International Sunport (Figure 1-1). The approximate area of the Base is 52,287 acres. The Site is located in the northwestern portion of Kirtland AFB.

The BFF and associated infrastructure operated from 1953 until 1999. During this time, the fueling area was separated into a tank holding area where bulk shipments of fuel were received and a fuel loading area where individual fuel trucks were filled. Kirtland AFB removed the underground piping at the facility from service in 1999 due to discovery of underground leakage. Even though the fuel leak was identified by Kirtland AFB, the exact history of the leaks or releases is unknown. Releases could have occurred when fuel was transferred from railcars to the pump house. Initially, it was thought that the leak only affected surface soil around the identified source area; however, Kirtland AFB learned through characterization activities that the leaked fuel had reached the groundwater table and that the dissolved-phase fuel contamination migrated northeast and north of Kirtland AFB. Over time, EDB had dissolved in groundwater and mobilized from the source area downgradient in the direction of groundwater flow, thus resulting in the formation of a dilute plume.

In order to comply with NMED Hazardous Waste Bureau requirements, interim measures were implemented for both groundwater and soil. The goals of the groundwater interim measure are to protect drinking water supply wells, collapse the EDB plume, and remediate the light non-aqueous phase liquid. The first phase of the groundwater interim measure consisted of the installation of three extraction wells and construction of the first treatment train of the GWTS. In the first phase, CB&I Federal Services LLC (CB&I) designed and oversaw the construction of a GWTS; a collection system comprised of extraction wells, pipelines, well vaults, and valve vaults; and a discharge system comprised of pipelines, valve vaults, an injection well, and a discharge at the Tijeras Arroyo Golf Course main pond. Under this project, the GWTS has been expanded to implement the groundwater interim measure.

1.2 Project Objectives

The objective for this project is to expand the current GWTS facility for containment of the dissolved-phase EDB plume associated with the Site. The extent of the EDB plume as of the fourth quarter of 2016 is depicted on Figure 1-1. The GWTS was designed to ultimately extract and treat 800 gpm of groundwater. Groundwater is pumped from wells located to the west of the Base to a treatment facility located on-Base, treated to remove EDB and any other volatile organic compounds by carbon adsorption, and then discharged either to the Tijeras Arroyo Golf Course main pond or gravity injection well KAFB-7.

Initially, the treatment facility was outfitted with equipment capable of treating up to 400 gpm (USACE, 2016b). The design provided for the installation of additional equipment to bring the total capacity of the treatment system up to 800 gpm. This project includes expansion of the GWTS facility via construction of a second treatment train to increase the treatment capacity of the system to the full 800 gpm, and to implement design modifications to the existing GWTS components. The GWTS expansion has been completed in accordance with the contract drawings and technical specifications as originally prepared by CB&I and carried forward for GWTS expansion by EA. Design modifications have been incorporated into the GWTS expansion as approved by USACE.

1.3 Report Organization

This CCR is divided into the following sections:

- ***Section 1***—Presents an introduction to the project, a Site description and background to the project, overview of the project objectives, and organization of the CCR.

- ***Section 2***—Presents the major activities completed during construction with milestone dates and significant details, including mobilization and Site setup, equipment delivery, installation of pipes and pipe supports, instrumentation modifications, electrical components, paint and finishes, controls, substantial completion, and system startup and shakedown.

- ***Section 3***—Presents the QC measures used during construction including three phases of control, project records, submittal review and approval, materials receiving and documentation, QC testing, punch lists, and Site photographs.

- ***Section 4***—Presents a summary of the project and conclusion stating the project has been completed.

Figures and Appendices are provided at the end of the CCR (included on compact disc) as follows:

- Figure 1-1: Site Map

- Appendix A: QC Records, Miscellaneous Reports, and Correspondence

  — Attachment 1: Preparatory-Phase Meeting Minutes
  — Attachment 2: Daily Construction Quality Management Reports
  — Attachment 3: Testing Documentation
  — Attachment 4: Punch Lists
  — Attachment 5: Additional Safety Documentation

- Appendix B: Submittals

  — Attachment 1: Engineer-Approved Submittals
  — Attachment 2: Closeout Submittals

- Appendix C: Record Drawings

- Appendix D: Warranties

2. PROJECT ACTIVITIES

2.1 Mobilization and Site Setup

Construction of the GWTS expansion was performed by Techsas Incorporated and their subcontractors. Construction started with mobilization of personnel and equipment, which began on September 22, 2016. Mobilization to the Site initially required only limited delivery of small tools and equipment on subcontractor vehicles. Additional tools and equipment such as man-lifts and forklifts were mobilized to the Site as-needed throughout construction. A crane was mobilized to the Site for placement of the major components on September 28, 2016, and demobilized at the end of the same day. A Rain For Rent 21,000-gallon Baker tank was mobilized to the Site on December 8, 2016, and remained on-site to temporarily store carbon vessel backwash water until the expanded GWTS was fully operational.

Prior to any construction activities, safety orientation and training were completed (Appendix A, Attachment 5). All personnel entering the project Site underwent safety orientation and training in accordance with the requirements of the Accident Prevention Plan (EA, 2016a). A Preparatory-Phase Meeting was held at the Site with the owner, contractor, and engineer present.

Temporary facilities such as an office trailer and temporary sanitary facilities had already been emplaced on the west side of Perimeter Circle during the first phase of construction for the GWTS, and these facilities were used during construction of the GWTS expansion. The open floor space within the existing GWTS building was used for equipment, material, and tool storage, and no additional storage sheds or containers were used by the contractor. Contractors parked personal vehicles and supporting equipment vehicles on the existing driveway on the south side of the GWTS, and in the open lot on the south side of the building.

2.2 Equipment

Placement of major components of the GWTS expansion equipment was completed by Crane Services Incorporated. Major components of the process equipment include the two 6,000-gallon tanks (TK-210 and TK-216); two equipment skids (one equipment skid with pumps P-212A/B, their variable frequency drives, check valves, and two bag filter units, and equipment skid with pump P-218, its variable frequency drives, a check valve, and two bag filter units), and two carbon filtration vessels (V-214A/B). The GWTS expansion equipment is shown in the Record Drawings (Appendix C).

On September 28, 2016, the major components were delivered and set into place by Crane Services Incorporated. The equipment was offloaded by crane and placed onto custom fabricated dollies near the overhead steel bay door. The equipment was then moved into marked locations within the building by forklift. A crane safety exclusion zone was established around the crane, and only trained and authorized personnel were allowed to enter. The carbon filtration vessels were offloaded and placed along the south wall of the building first. The two 6,000-gallon tanks were then placed in the northwest corner, and finally the equipment skids were placed adjacent to their respective counterparts from the first treatment train.

On December 13, 2016, with all piping installed, the carbon filtration vessels were loaded with granular activated carbon and backwashing of the carbon vessels was completed. Backwashing was performed using treated water provided from the existing treatment system. The treated discharge from existing carbon vessels V-114A/B was connected via hose to the backwash influent flange on carbon vessels V-214A/B, and the backwash discharge was connected via hose from the V-214A/B backwash effluent

flange to the Rain for Rent 21,000-gallon Baker tank. Backwash water was stored in the Baker tank and later treated by the GWTS during system startup and shakedown.

2.3 Pipe and Pipe Supports

Rupert Plumbing and Heating, Inc. installed the carbon steel piping for the treatment system. On October 3, 2016, Rupert Plumbing and Heating, Inc. mobilized to the Site and measured the piping lengths required using survey equipment. Pipe spools were pre-fabricated to a large extent at their facility and were x-ray-inspected by an independent testing company. On October 17, 2016, Rupert Plumbing and Heating, Inc. began leveling equipment skids and installing treatment system piping required for the GWTS expansion throughout the building. Over the course of the next 9 weeks, Rupert Plumbing and Heating, Inc. installed the carbon steel pipes in the treatment plant building and the associated valves and tank instrumentation. The carbon steel treatment system piping that could be installed and supported by the major system equipment was installed first, including carbon vessel manifold piping and tank influent flanges. The treatment system piping that would share a pipe support that had been previously installed for the first treatment train was then installed.

Mick Rich Contractors was responsible for installation of pipe supports. On October 24, 2016, Mick Rich Contractors mobilized to the Site and completed installation of pipe supports in one week. Pipe hangers were field fit to accommodate existing components of the first GWTS treatment train. All field changes were made in accordance with the contract drawings and technical specifications.

Upon completing installation of the pipe supports, the remaining carbon steel treatment system piping was installed by Rupert Plumbing and Heating, Inc. Newly installed pipe supports were measured by Rupert Plumbing and Heating, Inc. and piping was resized as necessary to accommodate the pipe support arrangement. Piping was typically pre-fabricated without end flanges and with extra length so that resizing would require only cutting the pipe to length and welding on the flange. Minor components, such as air relief valves and drain pipe, and lexan viewing flanges were also installed by Rupert Plumbing and Heating, Inc. Three segments of the treatment system piping that could be isolated by closing valves were hydrostatically tested prior to placing into service and results were documented (Appendix A, Attachment 2).

2.4 Instrumentation Modifications

Modifications to the existing GWTS were completed during construction of the GWTS expansion and the modifications were incorporated into the GWTS expansion design. The modifications were completed via construction contract modifications that were approved by USACE. The major modifications to the GWTS included the following instrument changes and additions:

- The V-Cone flow meters were replaced with magnetic flowmeters.
- Differential pressure sensors with transmitters were added at the influent bag filters.
- Two Lexan viewing flange plates were installed on each influent and effluent tank.
- Differential pressure level transducers were replaced with submersible level transducers, and level switches were replaced with float switches in each influent and effluent tank.
- Gauges and pressure transmitters were installed upstream and downstream of the effluent valve.

- An emergency stop button was installed on the exterior of the building.
- Programmable logic controller and human machine interface (HMI) programming were updated to include the GWTS expansion and increase functionality.
- A digital display was installed showing an accumulated total flow value above the control room entrance.

2.5 Electrical

Wilson Electric, Inc. furnished and installed electrical equipment associated with the project. On November 11, 2016, Wilson Electric, Inc. mobilized to the Site and began installation of electrical equipment. The electrical installation is comprised entirely of rigid metal conduit with threaded connections. The conduits distribute 480-volt circuits from the MDP-100, which is the 480-volt, three-phase circuit breaker panel located in the control room; 120/240-volt circuits from PP-100, which is the transformer/circuit breaker panel also located in the control room; and 4-20 mA control circuits for all systems emanates from CP-100, which is the main control system panel located in the control room. Wilson Electric, Inc. began pulling wire for power circuits on November 30, 2016, and began pulling wire for control circuits on December 13, 2016. Wire for power circuits was pulled and landed by December 21, 2016.

Several of the rigid metal conduits required for the GWTS expansion had been partially installed during construction of the first treatment train, and these conduits were extended during this GWTS expansion. New rigid metal conduit was installed to complete the GWTS expansion to provide power and controls to all equipment. The routing for the new conduit was selected by the contractor, using their professional judgement and expertise for placement, and in accordance with the technical specifications. The conduit was installed a minimum of six inches away from parallel runs of conduit or treatment system piping, parallel or at right angles to ceilings, walls, and structural members, and close to the ceiling so as not to cause any obstructions within the building. An existing trapeze conduit hanger was extended to include a second hanger. The second hanger is approximately six inches below the first. All conduit was painted white, matching the existing conduit.

2.6 Paint and Finishes

Ultra Painting, Inc. furnished and applied paints for the project. All paints used by Ultra Painting, Inc. were alkyd-based. On October 27, 2016, Ultra Painting, Inc. mobilized to the Site and applied a primer coat to all bare metal surfaces of piping supports and welded joints of installed treatment system piping. On January 3, 2017, Ultra Painting, Inc. re-mobilized to the Site and, over the course of two weeks, completed painting on all treatment system piping and rigid metal electrical conduit. Painting was completed with brushes or rollers (no sprayers were used). Touchup painting was completed by Ultra Painting, Inc. on January 11, 2017, and labeling for piping was installed by Rupert Plumbing and Heating, Inc. on January 12, 2017. A final application of touchup painting was completed by Techsas Incorporated on January 31, 2017. Pump skid surfaces were also touched up at that time.

The color of carbon steel piping and pipe supports for the GWTS expansion is an eggshell white. Samples of these colors can be taken from remnant buckets of these paints that were left at the treatment plant for this purpose.

2.7 Controls

I&C Solutions LLC (I&CS) furnished and installed control system hardware and programming for the project. I&CS mobilized to the Site on October 12, 2016, to begin installing the instrument modifications discussed in Section 2.4, including new pressure gauges and transmitters. I&CS developed updated programming for the GWTS throughout the construction period. On January 19, 2017, I&CS began landing control circuits in the main control system panel.

Controls for the GWTS expansion were incorporated into the existing main control panel (CP-100). CP-100 houses an Allen-Bradley programmable logic controller, which implements the control algorithm for the treatment system operation. CP-100 had been designed with adequate room to accommodate the additional hardware required for the GWTS expansion. The HMI for the control system is a touch screen located on a panel door for CP-100. On January 20, 2017, I&CS replaced the existing 7-inch display for the HMI with a 12-inch display. At that time, I&CS also updated the programming of the HMI to include graphics of both the first and second treatment train, and improved user controls and functionality. The programming controlling the first treatment train was replaced at that time. I&CS programmed the programmable logic controller to implement the control scheme described in the technical specifications and in accordance with design modifications. Programming updates and troubleshooting continued until February 1, 2017.

2.8 Substantial Completion

On February 2, 2017, USACE performed a final inspection of the GWTS expansion. Preceding the final inspection, a substantial completion punch list was prepared by EA. The punch list items were addressed by the contractor prior to the final inspection. The items on the punch list were verified and approved complete during the final inspection, and milestone payment for construction of the GWTS expansion was provided by USACE. EA acknowledges that several items, including construction of a new extraction well (KAFB-106239) and conveyance pipeline, and the addition of sand filters, are still yet to be completed. These items will be addressed under a separate report and do not represent any unfinished work with respect to completion of the GWTS expansion.

2.9 System Startup and Shakedown

Upon approval of the substantial completion, system startup and shakedown began. The system was started on February 2, 2017, when treatment pumps P-212A/B were started and water from wells KAFB-106228 and KAFB-106234 was treated through carbon filtration vessels V-214A/B. The system is configured to treat groundwater through both treatment trains simultaneously; however, during startup and shakedown testing, the treatment trains were run individually and in tandem to evaluate system performance under various conditions.

Shakedown testing began on February 6, 2017, and involved operating the system under close observation while documenting and evaluating the performance of the GWTS equipment and updated programming. Treated water was discharged to the Tijeras Arroyo Golf Course main pond during the shakedown. Shakedown testing included alarm verification and loop checks. Alarms in tanks, sumps, and pressure gauges were triggered by manual manipulation of the GWTS by the operator, and the system's response to each alarm state was recorded (Appendix A, Attachment 2). The shakedown revealed flow rate control issues that were documented in a shakedown punch list (Appendix A, Attachment 4), and those issues that impacted the proper operation of the GWTS were corrected by the contractor in a timely manner, which allowed shakedown testing to continue.

Samples were collected from the influent, effluent, and intermediate sample points during startup and shakedown. The sample results showed that the newly installed treatment system was effective in treating the contamination. A daily regimen of confirmatory sampling was performed, initially for the first seven days, then weekly for a month, then monthly thereafter to comply with the GWTS Operation and Maintenance Plan (USACE, 2016c). All shakedown testing results will be included in the Quarterly Report for January-March 2017.

3. QUALITY CONTROL

3.1 Construction Quality Control Plan

A Construction QC Plan, which established the QC system of EA to provide the necessary supervision, control phases, and tests for all work items, including that of suppliers and subcontractors was submitted to USACE and approved in September 2016 (EA, 2016b). Adherence to this document ensured the contractor-furnished equipment, materials, workmanship, construction, finish, functional performance, and identification were in compliance with the applicable contract drawings and technical specifications. The QC program described in that document was implemented during construction of the GWTS expansion.

3.2 Three Phases of Control

A three-phase QC inspection process as described in the Construction QC Plan (EA, 2016b) includes a Preparatory Phase, Initial Phase, and Follow-Up Phase as described below.

The Preparatory Phase meeting was held with the construction subcontractor prior to the beginning of work on the GWTS expansion. This meeting was recorded in meeting notes (Appendix A, Attachment 1). Topics discussed at this meeting included Site orientation, scheduling concerns, facility access, security at Kirtland AFB, reporting requirements, and health and safety. The Preparatory Phase inspection included:

- A review of the applicable planning documents (Construction QC Plan, [EA, 2016b], and Accident Prevention Plan/Site Safety and Health Plan [EA, 2016a])
- A review of the contract drawings
- A check to ensure that all materials and/or equipment have been delivered or inspected and are in acceptable condition
- A review of provisions that have been made to provide required control inspection and testing
- Examination of the work area to ensure that all required preliminary work has been completed and is in compliance with the contract
- A physical examination of required materials, equipment, and sample work to assure that they are on hand, conform to technical specifications, and are properly stored
- A review of the applicable activity hazard analysis to ensure safety requirements are met per Engineer Manual 385-1-1, Safety and Health Requirements Manual (Appendix A, Attachment 5)
- A discussion of procedures for controlling quality of the work including repetitive deficiencies, document construction tolerances, and workmanship standards for that feature of work
- A check to ensure that the portion of the plan for the work to be performed has been approved by the Contracting Officer.

The Initial Phase meetings were held with the construction subcontractor at the beginning of each definable feature of work. The Initial Phase inspections included:

- A check of the portion of work done to ensure that it is in full compliance with the contract document requirements
- Verification of adequacy of controls to ensure full contract document compliance
- Verification of the required control inspection and testing
- Establishment of a level of workmanship and verification that meets minimum acceptable workmanship standards
- A check of safety to include compliance with the site safety plan
- A review of the activity hazard analysis with each worker
- Repeat of the Initial Phase for each new crew to work onsite, or any time acceptable specified quality standards are not being met.

The Follow-up Phase consisted of continuous checks to ensure the requirements of the contract documents were being met. Daily quality assurance inspections (follow-up inspections) were performed, and the results of all inspections, testing, and surveillances performed were recorded on the Daily Construction Quality Management Reports (Appendix A, Attachment 2).

3.3 Project Records

Project records consist of many documents. Most fall into one of following several main categories:

- ***Health and Safety Records***—Daily tailgate safety meeting records, attendance rosters, job safety analyses, and incident and near-miss reports.
- ***QC Records***—Preparatory and initial control worksheets, Daily Construction Quality Management Reports, material testing records, and inspection reports.
- ***Production Records***—Daily production reports, receipts, and bills of lading.
- ***Sampling/Waste Management Records***—Collected sample forms, chains-of-custody forms, laboratory reports, and shipping manifests.
- ***Engineering Records***—Contract drawings, shop drawings, as-built drawings, record drawings, technical specifications, and submittals.
- ***Photographs***— Photographs to document major activities or newly installed equipment.

This CCR includes portions of the preceding list that are essential to document the completion of the construction phase in the appendices, which are presented on compact disc.

3.4 Submittal Review and Approval

Technical submittals were prepared as required by the technical specifications and per the pre-approved submittal registry as listed in the Construction QC Plan (EA, 2016b). Submittals requiring engineer-approval were scheduled and made prior to the acquisition of the material or equipment. Submittals were prepared by the contractor, Techsas Incorporated, and submitted to EA for approval. All items were checked and approved by the EA Construction Manager, and each item was signed by the EA Construction Manager indicating action taken. Upon approval by EA, these were submitted to USACE and approved. Engineer-approved submittals were provided to USACE via email, stored on EA file servers, and housed at the project Site in hard copies (Appendix B, Attachment 1). Closeout submittals were provided by the contractor upon completion of construction, and included Operation and Maintenance manuals for installed equipment (Appendix B, Attachment 2). Warranties have been provided for all treatment system equipment and control systems constructed for the GWTS expansion (Appendix D).

Each submittal was reviewed for completeness and sufficient detail to allow ready determination of compliance with contract document requirements. Where sufficient detail was not provided, the submittals were rejected by EA and re-submitted by the contractor. Submittal reviews are for general compliance with the contract documents. The engineer does not assume responsibility for correctness of dimensions or detail upon approval of a submittal. A lack of exceptions noted by the engineer does not waive the contractor's obligation to comply with contract drawings and technical specifications. Deviations from the contract document requirements were noted and corrected prior to construction.

3.5 Materials Receiving and Documentation

All materials used during construction and equipment installed were inspected and verified to be in accordance with the contract drawings and technical specifications. Items that are described by submittals requiring engineer approval were inspected to verify they were identical in make/manufacture to that which was approved. Verifying documentation for each of these inspections is included in the Daily Construction Quality Management Reports (Appendix A, Attachment 2).

3.6 Quality Control Testing

A wide array of QC testing (Appendix A, Attachment 3) was performed that includes, but was not limited to, the following:

- Hydrostatic tests for three segments of carbon steel treatment system piping
- Control system tests to ensure all the peripherals functioned properly, all transmitter loops operated properly, all component status indicators were functioning properly, and all interlocks on the control software responded properly to any potential alarm conditions
- Flowmeter calibration verification via sight glass level measurements and pump start and end time recordings
- Level sensor calibration verification via comparison of sight glass level measurements to HMI readings.

3.7 Punch Lists

EA began to keep a punch list of items that were found to be unfinished or needed to be addressed near the end of the construction schedule (Appendix A, Attachment 4). This punch list was completed on January 20, 2017. The punch list also included a sub-list of design modification items, and this sub-list was used to verify that the modifications had been completed. On January 25, 2017, six additional items identified by USACE in relation to electrical components were included on the punch list. All items were addressed prior to final approval on February 2, 2017.

A shakedown punch list was developed during the system startup and shakedown testing (Appendix A, Attachment 4). Items on the shakedown punch list were not detectable until the system was operating, but were identified during the shakedown testing. The shakedown punch list was completed on February 16, 2017, and all items were addressed by the contractor, via warranty service, by March 6, 2017. A sub-list of out-of-scope items was included in the shakedown punch list, and those items are not included in this CCR.

3.8 Variances and Nonconformance

During the building construction phase of work, variations to the contract drawings were handled via the Request for Information process. Any potential non-conformances to the technical specifications were brought to the attention of the project engineer, whereupon they were addressed immediately such that none were allowed to advance to the level of a formal non-conformance.

3.9 Site Photographs

Site activities, conditions, materials, and levels of completion were routinely documented with photographs throughout the project. Photographs were included in each Daily Construction Quality Management Report (Appendix A, Attachment 2). The photographs were labeled with the location, date, direction of the camera, and a brief description of the subject matter that was being depicted. Photographs were selected to document major activities or newly installed equipment each day.

4. SUMMARY AND CONCLUSION

The intent of this project was to expand the current GWTS facility associated with the Site at SWMU ST-106/SS-111, located on the Kirtland AFB, New Mexico, as part of an interim measure for remediation of the off-Base portion of the dissolved-phase EDB groundwater plume. Groundwater is pumped from wells located to the west of the Base to a treatment facility located on-Base, treated to remove EDB and any other volatile organic compounds by carbon adsorption, and then discharged either to the Tijeras Arroyo Golf Course main pond or gravity injection well KAFB-7. The GWTS was designed to ultimately extract and treat 800 gpm of groundwater, but was initially outfitted with equipment capable of treating up to 400 gpm. This project included expansion of the GWTS facility via construction of a second treatment train to increase the treatment capacity of the system to the designed 800 gpm, and implementation of design modifications to the existing GWTS components.

Actions taken to complete this expansion included installation of the two 6,000-gallon tanks (TK-210 and TK-216), two equipment skids (one equipment skid with pumps P-212A/B, and one equipment skid with pump P-218), and two carbon filtration vessels (V-214A/B, carbon steel treatment system piping). Additional items included electrical and control equipment, painting of treatment system piping and pipe supports, and approved modifications to treatment system equipment. The GWTS expansion has been completed in accordance with the contract drawings and technical specifications, and EA considers this CCR and the work that it describes to be complete.

REFERENCES

EA. 2016a. *Accident Prevention Plan for the Kirtland Air Force Base Bulk Fuels Facility Expansion of the Dissolved-Phase Plume Groundwater Treatment System Design Revision 4.* Kirtland Air Force Base, New Mexico. March.

EA. 2016b. *Construction Quality Control Plan, Kirtland Air Force Base Bulk Fuels Facility Expansion of the Dissolved-Phase Plume Groundwater Treatment System Design*. Kirtland Air Force Base, New Mexico.

NMED. 2010. Hazardous Waste Treatment Facility Operating Permit, EPA ID No. NM9570024423, Issued to U.S. Air Force for the Open Detonation Unit Located at Kirtland Air Force Base, Bernalillo County, New Mexico, by the NMED Hazardous Waste Bureau. July.

USACE. 2016a. *Work Plan for the Bulk Fuels Facility Expansion of the Dissolved-Phase Plume Groundwater Treatment System Design Revision 1, Solid Waste Management Unit ST-106/SS-111*. Prepared by EA Engineering, Science, and Technology, Inc., PBC for USACE–Albuquerque District. September 20.

USACE. 2016b. *Construction Completion Report Groundwater Treatment System Construction and Well Installation at Kirtland Air Force Base.* Bulk Fuels Facility Solid Waste Management Unit ST-106/SS-111. Prepared by CB&I Federal Services LLC for USACE–Albuquerque District. May.

USACE. 2016c. *Operations and Maintenance Plan, Groundwater Treatment System, Bulk Fuels Facility, SWMU ST-106/SS-111.* Prepared by EA Engineering, Science, and Technology, Inc., PBC for the USACE Albuquerque District under USACE Contract No. W912WR-12-D-0006. August 22.

FIGURES

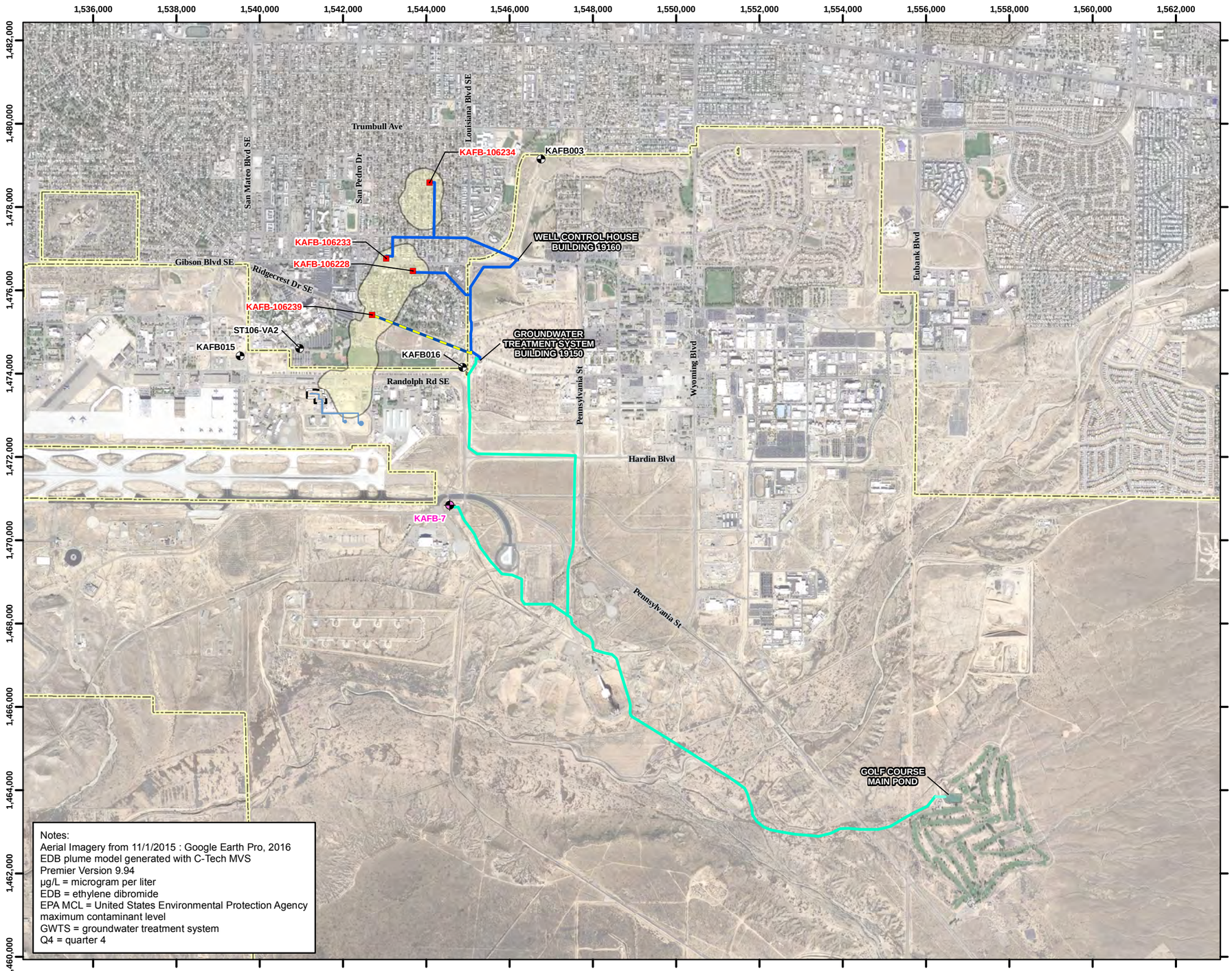

Notes:
Aerial Imagery from 11/1/2015 : Google Earth Pro, 2016
EDB plume model generated with C-Tech MVS Premier Version 9.94
µg/L = microgram per liter
EDB = ethylene dibromide
EPA MCL = United States Environmental Protection Agency maximum contaminant level
GWTS = groundwater treatment system
Q4 = quarter 4

P:\gis\Projects\Kirtland\Figures\BFF Workplan\1-1 SiteMap WP-R2.mxd 3/2/2017 EA sbusby

Legend

- Extraction Well
- Injection Well KAFB-7
- Drinking Water Supply Well
- Former Aboveground Storage Tank
- Former Fuel Transfer Line
- GWTS Expansion Influent Piping
- GWTS Influent Piping
- GWTS Effluent Piping
- Installation Boundary
- Q4 2016 EDB Plume with Concentration > 0.05 µg/L (EPA MCL)
- Source Area

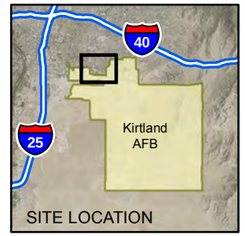

N

0 1,250 2,500 5,000

Feet

1 inch = 2,500 feet

Projection: NAD83 State Plane New Mexico Central FIPS3002 Feet

BULK FUELS FACILITY EXPANSION OF THE GROUNDWATER TREATMENT SYSTEM DESIGN
SOLID WASTE MANAGEMENT UNIT ST-106/SS-111
KIRTLAND AIR FORCE BASE, NEW MEXICO

FIGURE 1-1

SITE MAP

APPENDIX A

Quality Control Records, Miscellaneous Reports, and Correspondence

(Provided on compact disc)

- **Attachment 1: Preparatory-Phase Meeting Minutes**
- **Attachment 2: Daily Construction Quality Management Reports**
- **Attachment 3: Testing Documentation**
- **Attachment 4: Punch Lists**
- **Attachment 5: Additional Safety Documentation**

PREPARATORY-PHASE MEETING MINUTES

GWTS Expansion

Preparatory-Phase Meeting Minutes

Project: Kirtland Bulk Fuels Facility (BFF) Treatment System Expansion
Meeting: EA GWTS Building Construction - Preparatory Phase Meeting
Date: 22 September 2016
Time: 0900
Call in Number: NA

Attendees:

Participant	Attended
Trent Simpler, PE – USACE PM	X
Amy Sanchez – USACE COR	X
Wayne Bitner – AFCEC; Kirtland POC	X
Lee Becker PE, – EA Chief Engineer	X
Devon Jercinovic, PG – EA Project Manager	X
Lucas Rief, PE – EA Construction Manager	X
Alex Spiller, PE – Construction Quality	X
Earl Morse, PG – EA Field Operations Manager, SSHO	
Peter Ferrari – EA Sr Technician; SSHO	X
Kevin McKeage, EI, – EA Construction Quality	X
Ed Butler – President Techsas, Inc.	X

Mr. Becker of EA conducted the meeting. Mr. Becker provided a brief summary of the DFOWs, the status of submittals, and inspection and testing requirements.

On 28SEP16 the crane, GAC vessels, skid pumps, and water tanks will arrive at the groundwater treatment system (GWTS). Mr. Butler stated that the crane will mobilize at approximately 0830 to avoid rush hour traffic. Ms. Jercinovic noted that two of the overhead lights will need to be removed in order to allow the GAC vessels entrance into the GWTS. (NOTE: After the meeting EA staff contacted Wilson Electric about the light removal.) Mr. Bitner stated that contractors should identify Zia Park as their destination to avoid confusion at the security gates. Ms. Jercinovic asked about the planned crane and vehicle movements. Mr. Spiller responded that the plan is to place the crane on the concrete driveway and have trucks staged along Walker Street. Mr. Spiller also affirmed that there are no plans to stage vehicles or equipment along Ridgecrest Boulevard. Mr. Bitner and Mr. Simpler stated that closing off Walker Street and Perimeter Circle with barricades, cones, and caution tape is permitted and no notifications to the Base will be necessary.

General scheduling issues were discussed. Mr. Butler noted that work will generally be conducted from 0700 to 1700 each day. Mr. Bitner stated that EA can work outside of normal work hours, but a call to the Kirtland Air Force Police is recommended. Mr. Ferrari asked about coordinating with KUMMSC regarding upcoming scheduled work at injection well KAFB-7. Mr. Bitner stated that if we provide work dates, KUMMSC sometimes lets him know as a courtesy when work cannot occur. He also cautioned

that KUMMSC personnel often do not convey information from shift to shift (shifts from 0700-1500, 1500-2300, and 2300-0700).

Ms. Jercinovic stated that the Construction Quality Control Plan will be updated and resubmitted this afternoon.

Ms. Jercinovic stated that the faulty influent transfer pump should be replaced after the second treatment train is online so that the system can operate with minimal downtime. There was a general consensus regarding this issue.

Mr. Becker asked about reporting requirements. Ms. Sanchez stated that our detailed daily report format is suitable and should be emailed daily to the USACE staff. Ms. Sanchez said a brief weekly report summarizing weekly activities should be submitted to the AFCEC and USACE.

Mr. Simpler stated that safety is the highest priority and that strict adherence to established safety protocols is critical. He stated that EA and EA's subcontractors will need to be cognizant of all details.

DAILY CONSTRUCTION QUALITY MANAGEMENT REPORTS

DAILY REPORT

(ATTACH ADDITIONAL SHEETS IF NECESSARY)

CONTRACT NAME:	Kirtland AFB Bulk Fuels Facility Expansion of Dissolved Plume GWTS Design	REPORT NO: 001	
CONTRACT NUMBER:	W912DR-12-D-0006	REPORT DATE:	22SEP16
REVISION NUMBER:	-	REVISION DATE:	-
TASK ORDER NUMBER:	DM01	PROJECT NAME / LOCATION:	
PROJECT NUMBER:	62599DM01	PROJECT DESCRIPTION:	KAFB GWTS EXPANSION
PROJECT MANAGER:	Devon Jercinovic	FIELD QUALITY MANAGER:	Alex Spiller
CONSTRUCTION MANAGER:	Luke Rief	SITE SAFETY MANAGER:	Pete Ferarri

AM WEATHER:	Cool Breezey	PM WEATHER:	Hot Breezey	MAX TEMP (F): 86	

SUMMARY OF WORK PERFORMED TODAY

Wiring was run from dust suppression emergency stop button to HMI & and from bag filters to HMI. Emergency Stop Button Sign was installed at Main GWTS Stop button.

HEALTH AND SAFETY REPORT

SAFETY ACTIONS TAKEN TODAY/SAFETY INSPECTIONS CONDUCTED (Include Observations, Safety Violations, Corrective Instructions Given, Corrective Actions Taken, and Results of Safety Inspections Conducted: Safe work practices observed. No issues noted.

TAILGATE TOPICS: overhead/scissor lift hazards, safety gear, slips/trips+falls, etc.

SAFE BEHAVIOR OBSERVATIONS/SELF-ASSESSMENTS:

All staff utilized proper safety protocols

OPERATIONS / PRODUCTION REPORT

WORK FORCE – CONTRACTOR AND SUBCONTRACTOR

Company	Cumulative Total of Work Hours From Previous Report	Total Hours Today	Total Work Hours From Start of Injection Event
Techsgs	0	±1 hour	
Wilson Electric	0	±10 hours	

EQUIPMENT ON HAND

Description of Equipment	Make/Model/Manufacturer	Equipment ID Number	Inspection Performed By
Emergency Stop Button Sign		NA	A SPILLER
Wiring		NA	A SPILLER
Hose		NA	A SPILLER
Hose Racks		NA	A SPILLER

COMMENTS (acceptance status, inspection findings, etc.):

WORK AND/OR TESTS ACCOMPLISHED OR IN PROGRESS

Performed Work / Test for Today: Wiring was run and a sign was set. (See summary @above)

Planned Work / Test for Tomorrow:
Complete wiring, set hose racks

Planned Work / Test for Next Week:
Move GACs, water tanks, and skid pumps into position.
Make Programming upgrades, install PLCs

CHANGED CONDITIONS/DELAY/CONFLICTS ENCOUNTERED (List any conflicts with the project [i.e., scope of work and/or drawings], delays to the project attributable to site and weather conditions, etc.) None

VISITORS AND DISCUSSIONS:

QUALITY CONTROL REPORT

MATERIALS DELIVERED TO JOB SITE

Quantity/Volume/ Weight	Description of Materials Received	Make/Model/Manufacturer	Material Lot Number	Inspection Performed By
wiring	Gray twisted pair, Good	New Generation Belden	5320FF CHR 7SC 2C13	A Spilk
hose racks	stainless steel	Westward Stainless steel hanger	–	A Spilk
hose	blue flexible hose	Grainger blue	45DT94	A Spilk
signs	Good	custom	–	A Spilk

COMMENTS (acceptance status, inspection findings, etc.):

INSPECTIONS PERFORMED

Task/Activity Inspected	Inspection Performed	Findings
Mod 6	Visual Inspection	OK

TESTS PERFORMED

Task/Activity Tested	Test Performed	Test Results (Pass/Fail) - Criteria

QUALITY ISSUES AND RESOLUTIONS:

SUBMITTALS INSPECTION / REVIEW

Submittal No.	Submittal Description	Specification/Plan Reference	Submittal Approved?		Comment/Reason/Action
NA	Daily Report	–	Yes ☐	No ☐	Pending
NA	SBO	–	Yes ☐	No ☐	Pending
NA	PTSP	–	Yes ☐	No ☐	Pending

REGULATORY COMPLIANCE REPORT

PERMIT INSPECTIONS PERFORMED: NA

WASTE ACCUMULATION/STOCKPILE AREA INSPECTION

Inspection Performed By:	NA			Signature of Inspector:			
Accumulation / Stockpile Area Inspected:							
No of Bins:		No of Tankers		No of Roll-Off Boxes:		No. of Tanks	

Inspection Results:

GENERAL COMMENTS

General Comments~ (rework, directives, etc.):

ATTACHMENTS

List of Attachments: (examples, as applicable: submittals, meeting minutes, safety meeting minutes, COCs, weight tickets, manifests, profiles, rework item list, RFIs, DCNs, photographs, etc.):

Photo Log

NOTE: Write all entries legibly in ink. Line out all unused portions or designate as "not applicable". Preparer signs first and last name on each completed daily report. This form may be filled out electronically and signed electronically.

Alex Spill — PREPARER'S SIGNATURE

09-22-16 — DATE

PHOTOGRAPHS

Subject/Description: Emergency Stop Button Sign	
Photo Log No: 1	
Subject/Description:	
Photo Log No:	
Subject/Description:	
Photo Log No:	
Subject/Description:	
Photo Log No:	
Subject/Description:	
Photo Log No:	
Subject/Description:	
Photo Log No:	

Location: GWTS East interior wall
Description: Emergency Stop Button Sign
Date: 22 September 2016 Direction: East

DAILY REPORT

(ATTACH ADDITIONAL SHEETS IF NECESSARY)

CONTRACT NAME:	Kirtland AFB Bulk Fuels Facility Expansion of Dissolved Plume GWTS Design	REPORT NO:	002
CONTRACT NUMBER:	W912DR-12-D-0006	REPORT DATE:	23SEP16
REVISION NUMBER:	-	REVISION DATE:	-
TASK ORDER NUMBER:	DM01	PROJECT NAME / LOCATION:	KAFB, ABQ, NM
PROJECT NUMBER:	62599DM01	PROJECT DESCRIPTION:	KAFB GWTS Expansion
PROJECT MANAGER:	Devon Jercinovic	FIELD QUALITY MANAGER:	Alex Spilker
CONSTRUCTION MANAGER:	Luke Rief	SITE SAFETY MANAGER:	Pete Ferarri

AM WEATHER:	Cool Breezey Partly Cloudy	PM WEATHER:		MAX TEMP (F):			

SUMMARY OF WORK PERFORMED TODAY

Conduit + wiring run, (2) overhead lights removed

HEALTH AND SAFETY REPORT

SAFETY ACTIONS TAKEN TODAY/SAFETY INSPECTIONS CONDUCTED (Include Observations, Safety Violations, Corrective Instructions Given, Corrective Actions Taken, and Results of Safety Inspections Conducted: ~~overhead light removal (2), run conduit~~ ~~Pull wiring~~ Saw use safety discussed, otherwise no issues

TAILGATE TOPICS: Motor - moving parts, Bag filter valve safety, Lock out, ~~pull~~ tag out, lift safety, AR

SAFE BEHAVIOR OBSERVATIONS/SELF-ASSESSMENTS:

Safe behaviors observed

OPERATIONS / PRODUCTION REPORT

WORK FORCE – CONTRACTOR AND SUBCONTRACTOR

Company	Cumulative Total of Work Hours From Previous Report	Total Hours Today	Total Work Hours From Start of ~~Injection~~ Event
Wilson Electric	±10	±6	16

EQUIPMENT ON HAND

Description of Equipment	Make/Model/Manufacturer	Equipment ID Number	Inspection Performed By
Reciprocating Saw	DeWalt DW304P		A Spilk
Scissor lift	GS-1930	10118142	A Spilk / P. Ferarri

COMMENTS (acceptance status, inspection findings, etc.):

WORK AND/OR TESTS ACCOMPLISHED OR IN PROGRESS

Performed Work / Test for Today: wiring for differential pressure sensors run with conduit, 2 overhead lights removed for lift preparation

Planned Work / Test for Tomorrow:

None Planned

Planned Work / Test for Next Week:

Lift 2 GACs, 2 skid pump assemblies, and 2 water tanks with crane and set into position

CHANGED CONDITIONS/DELAY/CONFLICTS ENCOUNTERED (List any conflicts with the project [i.e., scope of work and/or drawings], delays to the project attributable to site and weather conditions, etc.

VISITORS AND DISCUSSIONS:

QUALITY CONTROL REPORT

MATERIALS DELIVERED TO JOB SITE

Quantity/Volume/ Weight	Description of Materials Received	Make/Model/Manufacturer	Material Lot Number	Inspection Performed By
± 20 ft	Aluminum Conduit			A Spill
± 200 ft	Gray twisted Pair wiring	New Generation Belden	5320FF CHK #5C 2C13	A Spill

COMMENTS (acceptance status, inspection findings, etc.):

INSPECTIONS PERFORMED

Task/Activity Inspected	Inspection Performed	Findings
Mod 6	Visual Inspection	OK

TESTS PERFORMED

Task/Activity Tested	Test Performed	Test Results (Pass/Fail) - Criteria

QUALITY ISSUES AND RESOLUTIONS:

SUBMITTALS INSPECTION / REVIEW

Submittal No.	Submittal Description	Specification/Plan Reference	Submittal Approved?		Comment/Reason/Action
NA	Daily Report	–	Yes ☐	No ☐	Pending
NA	SBO	–	Yes ☐	No ☐	Pending
NA	PTSP	–	Yes ☐	No ☐	Pending

REGULATORY COMPLIANCE REPORT

PERMIT INSPECTIONS PERFORMED: NA

WASTE ACCUMULATION/STOCKPILE AREA INSPECTION

Inspection Performed By:	NA	Signature of Inspector:	
Accumulation / Stockpile Area Inspected:			

No of Bins:		No of Tankers		No of Roll-Off Boxes:		No. of Tanks	

Inspection Results:

GENERAL COMMENTS

General Comments~ (rework, directives, etc.):

ATTACHMENTS

List of Attachments: (examples, as applicable: submittals, meeting minutes, safety meeting minutes, COCs, weight tickets, manifests, profiles, rework item list, RFIs, DCNs, photographs, etc.):

None

NOTE: Write all entries legibly in ink. Line out all unused portions or designate as "not applicable". Preparer signs first and last name on each completed daily report. This form may be filled out electronically and signed electronically.

Alex Spill — PREPARER'S SIGNATURE

09-23-16 — DATE

PHOTOGRAPHS

Subject/Description:	None
Photo Log No:	
Subject/Description:	
Photo Log No:	
Subject/Description:	
Photo Log No:	
Subject/Description:	
Photo Log No:	
Subject/Description:	
Photo Log No:	
Subject/Description:	
Photo Log No:	

DAILY REPORT

(ATTACH ADDITIONAL SHEETS IF NECESSARY)

CONTRACT NAME:	Kirtland AFB Bulk Fuels Facility Expansion of Dissolved Plume GWTS Design	REPORT NO: 003	
CONTRACT NUMBER:	W912DR-12-D-0006	REPORT DATE:	27 SEP16
REVISION NUMBER:	-	REVISION DATE:	- REV 1
TASK ORDER NUMBER:	DM01	PROJECT NAME / LOCATION:	KAFB, ABQ, NM
PROJECT NUMBER:	62599DM01	PROJECT DESCRIPTION:	KAFB GWTS Expansion
PROJECT MANAGER:	Devon Jercinovic	FIELD QUALITY MANAGER:	Alex Spilker
CONSTRUCTION MANAGER:	Luke Rief	SITE SAFETY MANAGER:	Pete Ferarri

AM WEATHER:	Cool, Breezy Partly Cloudy	PM WEATHER:	Hot, few clouds, Breezy	MAX TEMP (F):	76°	

SUMMARY OF WORK PERFORMED TODAY

Measured + Marked location of tanks, GACs, + Pump Skids
- Extended drop pipes on ARUs in vaults with tubing

HEALTH AND SAFETY REPORT

SAFETY ACTIONS TAKEN TODAY/SAFETY INSPECTIONS CONDUCTED (Include Observations, Safety Violations, Corrective Instructions Given, Corrective Actions Taken, and Results of Safety Inspections Conducted:

Visual Observation

TAILGATE TOPICS: Slips / Trips / Falls, uneven surfaces, hydration

SAFE BEHAVIOR OBSERVATIONS/SELF-ASSESSMENTS:

Safe Behaviors Observed

OPERATIONS / PRODUCTION REPORT

WORK FORCE – CONTRACTOR AND SUBCONTRACTOR

Company	Cumulative Total of Work Hours From Previous Report	Total Hours Today	Total Work Hours From Start of Injection Event
Techsas Inc.	0	±4	±4

EQUIPMENT ON HAND

Description of Equipment	Make/Model/Manufacturer	Equipment ID Number	Inspection Performed By
Tape Measure	Kobalt		NA
Screwdriver			
Combustible Gas Meter	QRAE II	PGM-2400P	Pete Ferarri

COMMENTS (acceptance status, inspection findings, etc.):

WORK AND/OR TESTS ACCOMPLISHED OR IN PROGRESS

Performed Work / Test for Today: Measured + Marked location for 2 GACs, 2 pump skids, and 2 water tanks, installed tubing in Vaults ARUs

Planned Work / Test for Tomorrow:

Set 2 GACs, 2 water tanks, and 2 pumpskids in place

Planned Work / Test for Next Week:

- Rupert may start measuring pipe lengths
~~None~~ - Depends on what materials arrive for Mod 6.

CHANGED CONDITIONS/DELAY/CONFLICTS ENCOUNTERED (List any conflicts with the project [i.e., scope of work and/or drawings], delays to the project attributable to site and weather conditions, etc.

VISITORS AND DISCUSSIONS: Discussed schedule for next day

QUALITY CONTROL REPORT

MATERIALS DELIVERED TO JOB SITE

Quantity/Volume/ Weight	Description of Materials Received	Make/Model/Manufacturer	Material Lot Number	Inspection Performed By
NA				

COMMENTS (acceptance status, inspection findings, etc.):

INSPECTIONS PERFORMED

Task/Activity Inspected	Inspection Performed	Findings
NA		

TESTS PERFORMED

Task/Activity Tested	Test Performed	Test Results (Pass/Fail) - Criteria

QUALITY ISSUES AND RESOLUTIONS:

SUBMITTALS INSPECTION / REVIEW

Submittal No.	Submittal Description	Specification/Plan Reference	Submittal Approved?		Comment/Reason/Action
NA	Daily Report	–	Yes ☐	No ☐	Pending
NA	SBO	–	Yes ☐	No ☐	Pending
NA	PTSP	–	Yes ☐	No ☐	Pending

REGULATORY COMPLIANCE REPORT

PERMIT INSPECTIONS PERFORMED: NA

WASTE ACCUMULATION/STOCKPILE AREA INSPECTION

Inspection Performed By:	NA			Signature of Inspector:			
Accumulation / Stockpile Area Inspected:							
No of Bins:		No of Tankers		No of Roll-Off Boxes:		No. of Tanks	

Inspection Results:

GENERAL COMMENTS

General Comments~ (rework, directives, etc.):

ATTACHMENTS

List of Attachments: (examples, as applicable: submittals, meeting minutes, safety meeting minutes, COCs, weight tickets, manifests, profiles, rework item list, RFIs, DCNs, photographs, etc.):

~~None~~ A2 Photo Log

NOTE: Write all entries legibly in ink. Line out all unused portions or designate as "not applicable". Preparer signs first and last name on each completed daily report. This form may be filled out electronically and signed electronically.

Alec Spill — PREPARER'S SIGNATURE

09-27-16 — DATE

PHOTOGRAPHS

Subject/Description: ARV Extension Drain Photo Log No: 1	KAFB-106228 well Vault
Subject/Description: Drain ARV Extension Photo Log No: 2	KAFB-106233 well Vault
Subject/Description: ARV DRAIN EXTENSION Photo Log No: 3	KAFB-106234 well Vault
Subject/Description: ARV Drain Extension Photo Log No: 4	~~tot~~ ARV Vault on Eastern AVE
Subject/Description: ARV Drain Extension Photo Log No: 5	ARV Vault on Louisiana Blvd
Subject/Description: Photo Log No:	

Location: KAFB-106228 Well Vault
Description: ARV Extension
Date: 27 September 2016 Direction: South

Location: KAFB-106233 Well Vault
Description: ARV Extension
Date: 27 September 2016 Direction: Down

Location: KAFB-106234 Well Vault
Description: ARV Extension
Date: 27 September 2016 Direction: West

Location: ARV Vault on Eastern Avenue
Description: ARV Extension
Date: 27 September 2016 Direction: Down

Location: ARV Vault on Louisiana Boulevard
Description: ARV Extension
Date: 27 September 2016 Direction: Down

DAILY REPORT

(ATTACH ADDITIONAL SHEETS IF NECESSARY)

CONTRACT NAME:	Kirtland AFB Bulk Fuels Facility Expansion of Dissolved Plume GWTS Design	REPORT NO:	004 REV01
CONTRACT NUMBER:	W912DR-12-D-0006	REPORT DATE:	28SEP16
REVISION NUMBER:	-	REVISION DATE:	- 29SEP16
TASK ORDER NUMBER:	DM01	PROJECT NAME / LOCATION:	KAFB, ABQ, NM
PROJECT NUMBER:	62599DM01	PROJECT DESCRIPTION:	KAFB GWTS EXPANSION
PROJECT MANAGER:	Devon Jercinovic	FIELD QUALITY MANAGER:	Alex Spilk
CONSTRUCTION MANAGER:	Luke Rief	SITE SAFETY MANAGER:	Earl Morse
AM WEATHER:	Cool, Breezy, Partly Cloudy	PM WEATHER:	Hot, breezy, Partly Cloudy
MAX TEMP (F):	81		

SUMMARY OF WORK PERFORMED TODAY

Deliver and set 2 GAC vessels, 2x6000 gallon tanks, and 2 pump skids.

HEALTH AND SAFETY REPORT

SAFETY ACTIONS TAKEN TODAY/SAFETY INSPECTIONS CONDUCTED (Include Observations, Safety Violations, Corrective Instructions Given, Corrective Actions Taken, and Results of Safety Inspections Conducted: See Attached

TAILGATE TOPICS: Exclusion zones, Crane Safety, Site control

SAFE BEHAVIOR OBSERVATIONS/SELF-ASSESSMENTS:

Overall, generally safe behavior observed. Minor exceptions noted.

OPERATIONS / PRODUCTION REPORT

WORK FORCE – CONTRACTOR AND SUBCONTRACTOR

Company	Cumulative Total of Work Hours From Previous Report	Total Hours Today	Total Work Hours From Start of Injection Event
Crane Services	0	12	0
Techsas	± 4	12	16
Brown Lee	0	4	4
Landstar	0	3	3
Paso Robles Tank	0	3	3

EQUIPMENT ON HAND

Description of Equipment	Make/Model/Manufacturer	Equipment ID Number	Inspection Performed By
Forklift	Fortis Hyster 155	8375	ASpilk / B Doody
Crane	Link belt	5895	ASpilk / B Doody

COMMENTS (acceptance status, inspection findings, etc.):

Crane Services has own daily equipment inspection procedures, conducted offsite by Bill Doody of Crane Services.

WORK AND/OR TESTS ACCOMPLISHED OR IN PROGRESS

Performed Work / Test for Today: 2 GAC Vessels, 2x 6000 gallon tanks, and 2 pump skids were delivered and set in the GWTS.

Planned Work / Test for Tomorrow:

None planned

Planned Work / Test for Next Week:

Possibly continue Mod 6 work, Possibly piping measurements.

CHANGED CONDITIONS/DELAY/CONFLICTS ENCOUNTERED (List any conflicts with the project [i.e., scope of work and/or drawings], delays to the project attributable to site and weather conditions, etc. Pipe hangers (see next page for details)

VISITORS AND DISCUSSIONS: USACE - T. Simpler, C. Salazar, A. Sanchez, M. Phaneuf

QUALITY CONTROL REPORT

MATERIALS DELIVERED TO JOB SITE

Quantity/Volume/ Weight	Description of Materials Received	Make/Model/Manufacturer	Material Lot Number	Inspection Performed By
2	CAC Vessels w/ Piping trea	Calgon Carbon	V-214A+B	A Spilk
2	6000-gallon tanks	Paso Robles Tank		A Spilk
2	Pump Skids	Flitemy Tech		A Spilk

COMMENTS (acceptance status, inspection findings, etc.): minor, see next page

INSPECTIONS PERFORMED

Task/Activity Inspected	Inspection Performed	Findings
Equipment	Visual Inspection	See Next page

TESTS PERFORMED

Task/Activity Tested	Test Performed	Test Results (Pass/Fail) - Criteria
NA		

QUALITY ISSUES AND RESOLUTIONS: Discussed pipe support on influent pump skid w/ E. Butler as Techsas. Additional support will be installed.

SUBMITTALS INSPECTION / REVIEW

Submittal No.	Submittal Description	Specification/Plan Reference	Submittal Approved?		Comment/Reason/Action
NA	Daily Report	-	Yes ☐	No ☐	Pending
NA	SBO	-	Yes ☐	No ☐	Pending
NA	PTSP	-	Yes ☐	No ☐	Pending

REGULATORY COMPLIANCE REPORT

PERMIT INSPECTIONS PERFORMED: None

WASTE ACCUMULATION/STOCKPILE AREA INSPECTION

Inspection Performed By:	NA		Signature of Inspector:				
Accumulation / Stockpile Area Inspected:							
No of Bins:		No of Tankers		No of Roll-Off Boxes:		No. of Tanks	

Inspection Results:

GENERAL COMMENTS

General Comments~ (rework, directives, etc.):	Ed Butler of Techsas and Luke Rief agreed on the placement of the GAC vessels, tanks, + pump skids

ATTACHMENTS

List of Attachments: (examples, as applicable: submittals, meeting minutes, safety meeting minutes, COCs, weight tickets, manifests, profiles, rework item list, RFIs, DCNs, photographs, etc.):

Photo Log + Post Equipment List Safety Review

NOTE: Write all entries legibly in ink. Line out all unused portions or designate as "not applicable". Preparer signs first and last name on each completed daily report. This form may be filled out electronically and signed electronically.

Alex Spill — PREPARER'S SIGNATURE

9-29-16 — DATE

A future pipe hanger for the overhead pipeline will need to be adjusted/redesigned to accomodate existing conduit.

The effluent pump skid pipe hanger (existing) was adjusted and does not match the as-builts provided. The hanger was adjusted to allow access to the bag filters.

Name plates on the 6000-gallon tanks were absent.

Equipment was visually inspected and the locations were measured to ensure conformance with design. All equipment needs minor paint touch up. The GAC vessels have 'Calgon Carbon' logos on front and back. These will need to be covered/removed.

Pump motors on the influent pump skid (new) do not match.

Location: Walker Street
Description: Unloading a Carbon Vessel
Date: 28 September 2016 Direction: West

Location: Walker Street
Description: Moving a Carbon Vessel
Date: 28 September 2016 Direction: West

Location: GWTS
Description: Positioning a Carbon Vessel
Date: 28 September 2016 Direction: South

Location: Walker Street
Description: Moving a 6000-Gallon Water Tank
Date: 28 September 2016 Direction: West

Location: GWTS
Description: Two (2) 6000-Gallon Tanks Set in GWTS
Date: 28 September 2016 Direction: Northwest

Location: GWTS
Description: Two (2) Carbon Vessels Set in GWTS with Piping Tree
Date: 28 September 2016 Direction: South

Location: GWTS
Description: Setting the Influent Pump Skid in the GWTS
Date: 28 September 2016 Direction: North

Location: GWTS
Description: Setting the Effluent Pump Skid in the GWTS
Date: 28 September 2016 Direction: West

Location: GWTS
Description: Effluent Pump Skid Set in the GWTS
Date: 28 September 2016 Direction: South

Location: GWTS
Description: Making Minor Adjustments to the Influent Pump Skid
Date: 28 September 2016 Direction: North

Location: GWTS
Description: Equipment Set in the GWTS at End of Day
Date: 28 September 2016 Direction: West

Location: GWTS
Description: New Influent Pump Skid Motors
Date: 29 September 2016 Direction: Northwest

A few health and safety observations were made while setting the equipment in the GWTS. The following is a list of theseobservations and resolutions. It should be noted that all issues were remediated immediately after being identified and conveyed to the workers involved.

Issue 1
Hard hats – The crane operator and one of the truck drivers exited their vehicles without wearing hard hats (one time each).

Resolution 1
For each instance the practice was observed, the operator/driver was notified and the person complied.

Issue 2
Exclusion Zone breach – A staff member without proper crane safety training inadvertently entered the exclusion zone around the crane.

Resolution 2
The staff member was notified. The staff member avoided the exclusion zone for the remainder of the event.

Issue 3
Forklift safety belt not worn – The forklift was operated without operator wearing a safety belt.

Resolution 3
Two different operators were observed and subsequently notified. After each notification, each operator wore the safety belt during forklift operation for the remainder of the event.

Issue 4
A-frame ladder safety –Workers were observed using the top step of an A-frame ladder and using an A-frame ladder on an elevated platform.

Resolution 4
Workers were notified of the unsafe practice. Workers immediately complied and discontinued the unsafe practices.

Issue 5
Extension ladder safety –Workers were observed using an extension ladder on an unsecured surface (dirt).

Resolution 5
Workers were notified of the unsafe practice. Additional workers immediately braced and secured the ladder.

Issue 6

While moving equipment workers were briefly observed being partially below equipment.

Resolution 6

Workers were notified of the unsafe practice. Workers immediately complied and discontinued the unsafe practice.

DAILY REPORT

(ATTACH ADDITIONAL SHEETS IF NECESSARY)

CONTRACT NAME:	Kirtland AFB Bulk Fuels Facility Expansion of Dissolved Plume GWTS Design	REPORT NO:	005
CONTRACT NUMBER:	W912DR-12-D-0006	REPORT DATE:	30CT16
REVISION NUMBER:	-	REVISION DATE:	-
TASK ORDER NUMBER:	DM01	PROJECT NAME / LOCATION:	KAFB, ABQ, NM
PROJECT NUMBER:	62599DM01	PROJECT DESCRIPTION:	KAFB GWTS EXPANSION
PROJECT MANAGER:	Devon Jercinovic	FIELD QUALITY MANAGER:	Alex Spiller
CONSTRUCTION MANAGER:	Luke Rief	SITE SAFETY MANAGER:	Pete Ferarsi

AM WEATHER:	Cloudy, cool Light wind	PM WEATHER:	Partly Cloudy, Windy	MAX TEMP (F):	78°		

SUMMARY OF WORK PERFORMED TODAY

Piping lengths required were measured

HEALTH AND SAFETY REPORT

SAFETY ACTIONS TAKEN TODAY/SAFETY INSPECTIONS CONDUCTED (Include Observations, Safety Violations, Corrective Instructions Given, Corrective Actions Taken, and Results of Safety Inspections Conducted: ~~Slips, Trips, + Falls; Hospital Route, emergency phone numbers~~ None

TAILGATE TOPICS: Slips, trips, and falls; emergency phone numbers; Hospital Route

SAFE BEHAVIOR OBSERVATIONS/SELF-ASSESSMENTS:

Safe behavior observed

OPERATIONS / PRODUCTION REPORT

WORK FORCE – CONTRACTOR AND SUBCONTRACTOR

Company	Cumulative Total of Work Hours From Previous Report	Total Hours Today	Total Work Hours From Start of Injection Event
Rupert Plumbing	0	1	0

EQUIPMENT ON HAND

Description of Equipment	Make/Model/Manufacturer	Equipment ID Number	Inspection Performed By
measuring tape			NA

COMMENTS (acceptance status, inspection findings, etc.):

NA

WORK AND/OR TESTS ACCOMPLISHED OR IN PROGRESS

Performed Work / Test for Today:

Measurements collected

Planned Work / Test for Tomorrow:

Install emergency stop button on extrusion at dust suppression pod.

Planned Work / Test for Next Week:

None planned

CHANGED CONDITIONS/DELAY/CONFLICTS ENCOUNTERED (List any conflicts with the project [i.e., scope of work and/or drawings], delays to the project attributable to site and weather conditions, etc. NONE noted

VISITORS AND DISCUSSIONS: None

QUALITY CONTROL REPORT

MATERIALS DELIVERED TO JOB SITE

Quantity/Volume/ Weight	Description of Materials Received	Make/Model/Manufacturer	Material Lot Number	Inspection Performed By
NA				

COMMENTS (acceptance status, inspection findings, etc.):

INSPECTIONS PERFORMED

Task/Activity Inspected	Inspection Performed	Findings
NA		

TESTS PERFORMED

Task/Activity Tested	Test Performed	Test Results (Pass/Fail) - Criteria
NA		

QUALITY ISSUES AND RESOLUTIONS: None noted

SUBMITTALS INSPECTION / REVIEW

Submittal No.	Submittal Description	Specification/Plan Reference	Submittal Approved?		Comment/Reason/Action
NA	Daily Report	–	Yes ☐	No ☐	Pending
NA	SBO	–	Yes ☐	No ☐	Pending
NA	PTSP	–	Yes ☐	No ☐	Pending

REGULATORY COMPLIANCE REPORT

PERMIT INSPECTIONS PERFORMED:

WASTE ACCUMULATION/STOCKPILE AREA INSPECTION

Inspection Performed By:		Signature of Inspector:	
Accumulation / Stockpile Area Inspected:	Not		

No of Bins:		No of Tankers	NA	No of Roll-Off Boxes:		No. of Tanks	

Inspection Results:

GENERAL COMMENTS

General Comments~ (rework, directives, etc.):

None

ATTACHMENTS

List of Attachments: (examples, as applicable: submittals, meeting minutes, safety meeting minutes, COCs, weight tickets, manifests, profiles, rework item list, RFIs, DCNs, photographs, etc.):

NOTE: Write all entries legibly in ink. Line out all unused portions or designate as "not applicable". Preparer signs first and last name on each completed daily report. This form may be filled out electronically and signed electronically.

Alec Spaill — PREPARER'S SIGNATURE

10-03-16 — DATE

DAILY REPORT

(ATTACH ADDITIONAL SHEETS IF NECESSARY)

CONTRACT NAME:	Kirtland AFB Bulk Fuels Facility Expansion of Dissolved Plume GWTS Design	REPORT NO:	006
CONTRACT NUMBER:	W912DR-12-D-0006	REPORT DATE:	4OCT16
REVISION NUMBER:	-	REVISION DATE:	-
TASK ORDER NUMBER:	DM01	PROJECT NAME / LOCATION:	KAFB, ABQ, NM
PROJECT NUMBER:	62599DM01	PROJECT DESCRIPTION:	KAFB GWTS Expansion
PROJECT MANAGER:	Devon Jercinovic	FIELD QUALITY MANAGER:	Alex Spille
CONSTRUCTION MANAGER:	Luke Rief	SITE SAFETY MANAGER:	Alex Spille

AM WEATHER:	Cool, breezy partly cloudy	PM WEATHER:	Hot, breezy clear	MAX TEMP (F):	69°		

SUMMARY OF WORK PERFORMED TODAY

Emergency stop button on dust suppression panel installed. A support strut was added to the previously installed conduit on pump skid.

HEALTH AND SAFETY REPORT

SAFETY ACTIONS TAKEN TODAY/SAFETY INSPECTIONS CONDUCTED (Include Observations, Safety Violations, Corrective Instructions Given, Corrective Actions Taken, and Results of Safety Inspections Conducted:

Visual inspection of activities

TAILGATE TOPICS: Emergency contacts, slips/Trips + falls, electrical safety

SAFE BEHAVIOR OBSERVATIONS/SELF-ASSESSMENTS:

Safe behavior observed

OPERATIONS / PRODUCTION REPORT

WORK FORCE – CONTRACTOR AND SUBCONTRACTOR

Company	Cumulative Total of Work Hours From Previous Report	Total Hours Today	Total Work Hours From Start of Injection Event
Wilson Electric	16	±5	21

EQUIPMENT ON HAND

Description of Equipment	Make/Model/Manufacturer	Equipment ID Number	Inspection Performed By
portable power drill			

COMMENTS (acceptance status, inspection findings, etc.):

Emergency stop button installed + conduit strut installed. Visual inspected as ok.

WORK AND/OR TESTS ACCOMPLISHED OR IN PROGRESS

Performed Work / Test for Today: Emergency stop button installed on dust suppression panel, strut installed on conduit on influent skid pump

Planned Work / Test for Tomorrow:

None planned

Planned Work / Test for Next Week:

not yet planned

CHANGED CONDITIONS/DELAY/CONFLICTS ENCOUNTERED (List any conflicts with the project [i.e., scope of work and/or drawings], delays to the project attributable to site and weather conditions, etc.

VISITORS AND DISCUSSIONS:

Trent Simpler and Mark Phaneuf observed activities

QUALITY CONTROL REPORT

MATERIALS DELIVERED TO JOB SITE

Quantity/Volume/ Weight	Description of Materials Received	Make/Model/Manufacturer	Material Lot Number	Inspection Performed By
NA				

COMMENTS (acceptance status, inspection findings, etc.):

INSPECTIONS PERFORMED

Task/Activity Inspected	Inspection Performed	Findings
NA		

TESTS PERFORMED

Task/Activity Tested	Test Performed	Test Results (Pass/Fail) - Criteria
NA		

QUALITY ISSUES AND RESOLUTIONS:

None noted

SUBMITTALS INSPECTION / REVIEW

Submittal No.	Submittal Description	Specification/Plan Reference	Submittal Approved?		Comment/Reason/Action
NA	Daily Report	-	Yes ☐	No ☐	Pending
- NA	SBO	-	Yes ☐	No ☐	Pending
-NA	PTSP	-	Yes ☐	No ☐	Pending

REGULATORY COMPLIANCE REPORT

PERMIT INSPECTIONS PERFORMED:

WASTE ACCUMULATION/STOCKPILE AREA INSPECTION

Inspection Performed By:		Signature of Inspector:	
Accumulation / Stockpile Area Inspected:	None		

No of Bins:		No of Tankers	NA	No of Roll-Off Boxes:		No. of Tanks	

Inspection Results:

GENERAL COMMENTS

General Comments~ (rework, directives, etc.):

ATTACHMENTS

List of Attachments: (examples, as applicable: submittals, meeting minutes, safety meeting minutes, COCs, weight tickets, manifests, profiles, rework item list, RFIs, DCNs, photographs, etc.):

Photo Log

NOTE: Write all entries legibly in ink. Line out all unused portions or designate as "not applicable". Preparer signs first and last name on each completed daily report. This form may be filled out electronically and signed electronically.

Alec Spill — PREPARER'S SIGNATURE

10-4-16 — DATE

Location: Dust Suppression Panel
Description: Emergency Stop Button at Dust Suppression Panel
Date: 4 October 2016 Direction: North

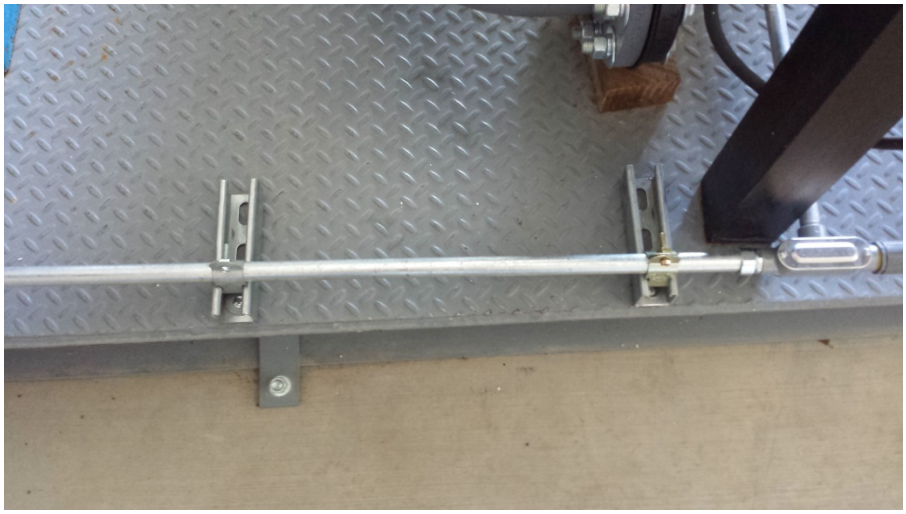

Location: Installed Strut for Additional Support
Description: Existing Influent Pump Skid
Date: 4 October 2016 Direction: Down

DAILY REPORT

(ATTACH ADDITIONAL SHEETS IF NECESSARY)

CONTRACT NAME:	Kirtland AFB Bulk Fuels Facility Expansion of Dissolved Plume GWTS Design	REPORT NO:	007
CONTRACT NUMBER:	W912DR-12-D-0006	REPORT DATE:	12OCT16
REVISION NUMBER:	-	REVISION DATE:	-
TASK ORDER NUMBER:	DM01	PROJECT NAME / LOCATION:	KAFB, ABQ, NM
PROJECT NUMBER:	62599DM01	PROJECT DESCRIPTION:	KAFB GWTS Expansion
PROJECT MANAGER:	Devon Jercinovic	FIELD QUALITY MANAGER:	Alex Spiller
CONSTRUCTION MANAGER:	Luke Rief	SITE SAFETY MANAGER:	Alex Spiller

AM WEATHER:	Cool, Hazey Breezey	PM WEATHER:	Hot breezey Partly Cloudy	MAX TEMP (F):	79°		

SUMMARY OF WORK PERFORMED TODAY

Install Hose fitting on Y-strainer, install site glass/pert holes on influent and effluent tank, measure piping, install pressure transmitters x5, programming

HEALTH AND SAFETY REPORT

SAFETY ACTIONS TAKEN TODAY/SAFETY INSPECTIONS CONDUCTED (Include Observations, Safety Violations, Corrective Instructions Given, Corrective Actions Taken, and Results of Safety Inspections Conducted: Visual Observation,

TAILGATE TOPICS: Uneven surfaces, Level D safety + hard hat, 911 emergency procedures

SAFE BEHAVIOR OBSERVATIONS/SELF-ASSESSMENTS:

Safe behaviors observed

OPERATIONS / PRODUCTION REPORT

WORK FORCE – CONTRACTOR AND SUBCONTRACTOR

Company	Cumulative Total of Work Hours From Previous Report	Total Hours Today	Total Work Hours From Start of Injection Event
Rupert Plumbing	1	10	11
ITC Solutions	0	12	12

EQUIPMENT ON HAND

Description of Equipment	Make/Model/Manufacturer	Equipment ID Number	Inspection Performed By
level			
wrenches + hand tools			
Man lift 1987 Genie	GS-1930		Chris Augster
Man lift 1987 Genie	GS-1930		Chris Augster

COMMENTS (acceptance status, inspection findings, etc.):

Site glasses will be installed next day. Ran out of time
Man lifts were not used, only positioned

WORK AND/OR TESTS ACCOMPLISHED OR IN PROGRESS

Performed Work / Test for Today: Pressure transmitters installed on influent bag filters KAFB-106228 well head, and well control house. Programming updated, installed new flange w/ hose connect on Y-Strainer, measured pipe runs

Planned Work / Test for Tomorrow: Install 4 site glasses on feed tanks.

Planned Work / Test for Next Week: Install process piping

CHANGED CONDITIONS/DELAY/CONFLICTS ENCOUNTERED (List any conflicts with the project [i.e., scope of work and/or drawings], delays to the project attributable to site and weather conditions, etc.

VISITORS AND DISCUSSIONS: M. Phaneuf

QUALITY CONTROL REPORT

MATERIALS DELIVERED TO JOB SITE

Quantity/Volume/ Weight	Description of Materials Received	Make/Model/Manufacturer	Material Lot Number	Inspection Performed By
5	Pressure Transmitter # 1XH927900766	Siemens Sitrans	PDS III	A Spilk
1	Y-Strainer flange w. Hose connect	NA	NA	A Spilk
4	Site glasses/port holes			A Spilk

COMMENTS (acceptance status, inspection findings, etc.):

INSPECTIONS PERFORMED

Task/Activity Inspected	Inspection Performed	Findings
Pressure transmitters	Visual inspection	Good
Y-Strainer Flange	Visual inspection	Good

TESTS PERFORMED

Task/Activity Tested	Test Performed	Test Results (Pass/Fail) - Criteria

QUALITY ISSUES AND RESOLUTIONS:

SUBMITTALS INSPECTION / REVIEW

Submittal No.	Submittal Description	Specification/Plan Reference	Submittal Approved?		Comment/Reason/Action
NA	Daily Report	–	Yes ☐	No ☐	Pending
NA	SBO	–	Yes ☐	No ☐	Pending
NA	PTSP	–	Yes ☐	No ☐	Pending

REGULATORY COMPLIANCE REPORT

PERMIT INSPECTIONS PERFORMED: None

WASTE ACCUMULATION/STOCKPILE AREA INSPECTION

Inspection Performed By:	NA	Signature of Inspector:	
Accumulation / Stockpile Area Inspected:			

No of Bins:		No of Tankers		No of Roll-Off Boxes:		No. of Tanks	

Inspection Results:

GENERAL COMMENTS

General Comments~ (rework, directives, etc.):

Previous day a cover was installed on main "E-Stop" button.

ATTACHMENTS

List of Attachments: (examples, as applicable: submittals, meeting minutes, safety meeting minutes, COCs, weight tickets, manifests, profiles, rework item list, RFIs, DCNs, photographs, etc.):

Photo Log

NOTE: Write all entries legibly in ink. Line out all unused portions or designate as "not applicable". Preparer signs first and last name on each completed daily report. This form may be filled out electronically and signed electronically.

Alex Spill — PREPARER'S SIGNATURE

10-12-16 — DATE

Location: Y-strainer at Influent Feed Tank
Description: New hose connect flange installed
Date: 12 October 2016 Direction: North

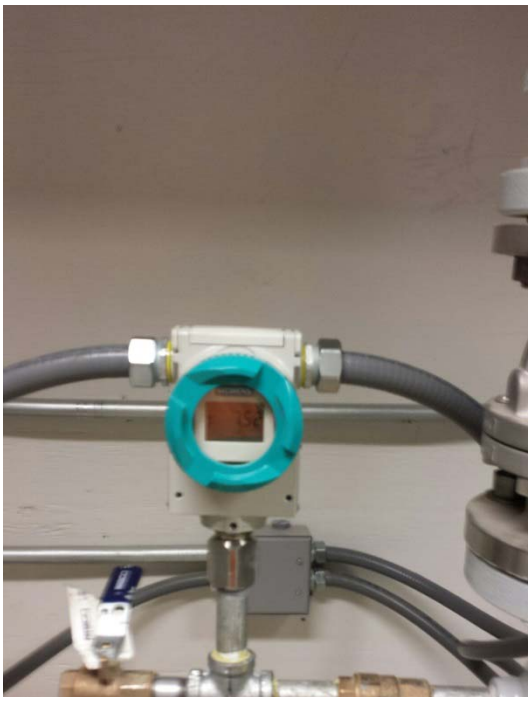

Location: Well Control House
Description: New Pressure Transmitter in Well Control House (KAFB-106233)
Date: 12 October 2016 Direction: North

Location: Well Control House
Description: New Pressure Transmitter in Well Control House (KAFB-106234)
Date: 12 October 2016 Direction: North

Location: KAFB-106228 Well House
Description: New Pressure Transmitter in KAFB-106228 Well Vault
Date: 12 October 2016 Direction: West

Location: East Wall of Ground Water Treatment System Building
Description: New Cover Installed on Emergency Stop Button
Date: 12 October 2016 Direction: East

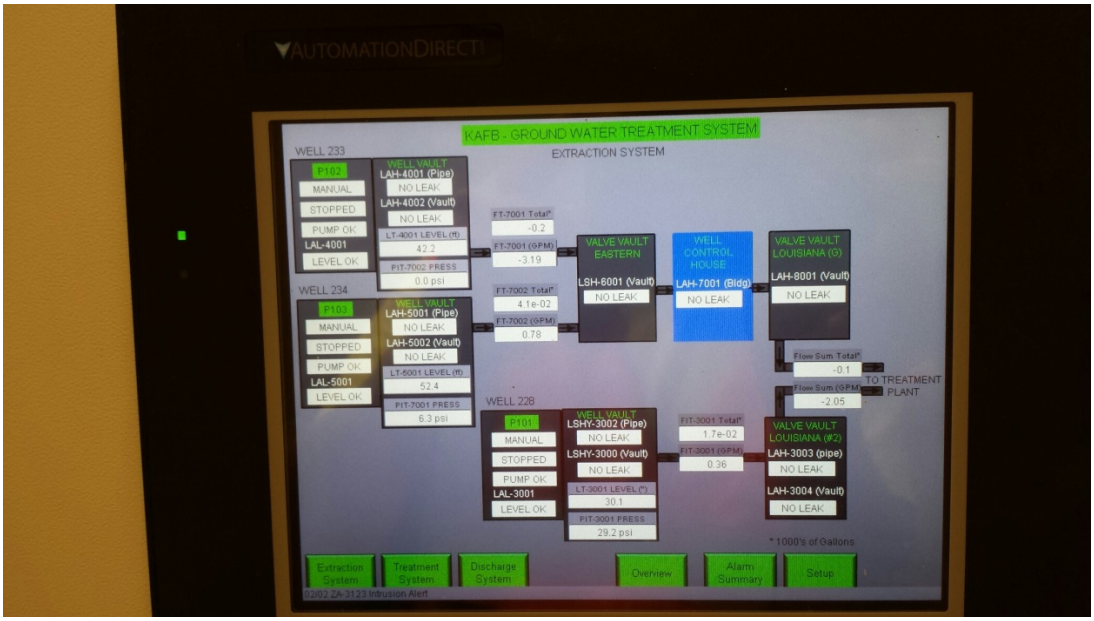

Location: Human Machine Interface (HMI) on South Wall of Ground Water Treatment System Building
Description: Extraction System Page on HMI
Date: 12 October 2016 Direction: South

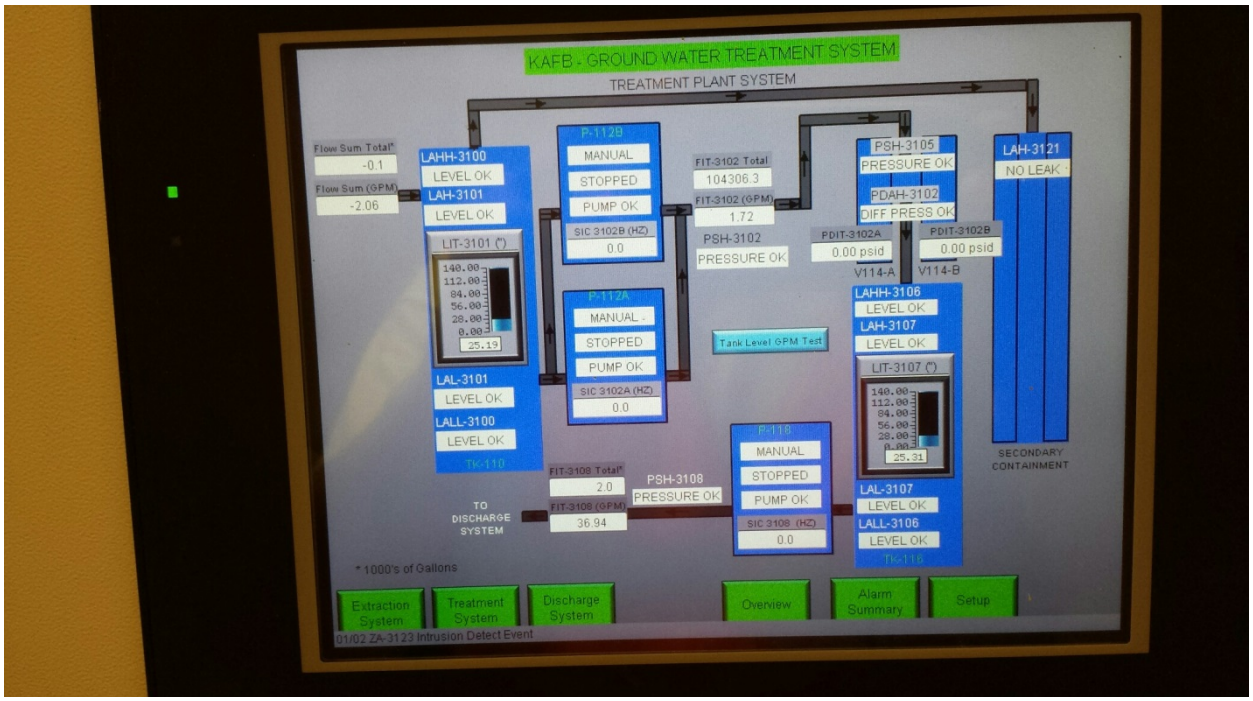

Location: Human Machine Interface (HMI) on South Wall of Ground Water Treatment System Building
Description: Treatment System Page on HMI
Date: 12 October 2016 Direction: South

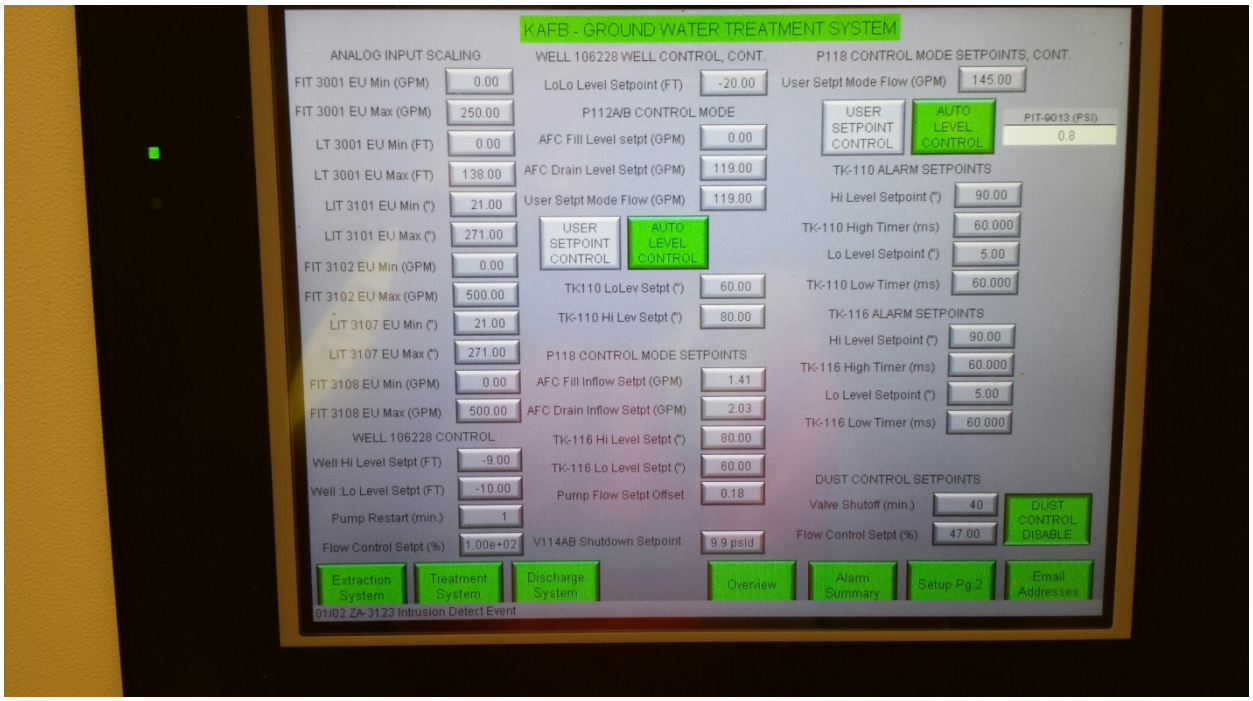

Location: Human Machine Interface (HMI) on South Wall of Ground Water Treatment System Building
Description: Setup Page on HMI
Date: 12 October 2016 Direction: South

DAILY REPORT

(ATTACH ADDITIONAL SHEETS IF NECESSARY)

CONTRACT NAME:	Kirtland AFB Bulk Fuels Facility Expansion of Dissolved Plume GWTS Design	REPORT NO: 008	008
CONTRACT NUMBER:	W912DR-12-D-0006	REPORT DATE:	13OCT16
REVISION NUMBER:	-	REVISION DATE:	-
TASK ORDER NUMBER:	DM01	PROJECT NAME / LOCATION:	KAFB ABQ, NM
PROJECT NUMBER:	62599DM01	PROJECT DESCRIPTION:	KAFB GWTS Expansio -
PROJECT MANAGER:	Devon Jercinovic	FIELD QUALITY MANAGER:	Alex Spilk
CONSTRUCTION MANAGER:	Luke Rief	SITE SAFETY MANAGER:	Alex Spilk

AM WEATHER:	Cool, Hazey, Breezey	PM WEATHER:	Hazey, Calm Warm	MAX TEMP (F):	76°		

SUMMARY OF WORK PERFORMED TODAY

Install 4 viewports/portholes on influent + effluent tanks

HEALTH AND SAFETY REPORT

SAFETY ACTIONS TAKEN TODAY/SAFETY INSPECTIONS CONDUCTED (Include Observations, Safety Violations, Corrective Instructions Given, Corrective Actions Taken, and Results of Safety Inspections Conducted:
Inspected manlift, safety harnesses + lanyards, visual observations

TAILGATE TOPICS: Slips, trips + Falls, eyewash station, 911 procedures, lift safety, safety gear inspection

SAFE BEHAVIOR OBSERVATIONS/SELF-ASSESSMENTS:
Safe Behaviors Observed

OPERATIONS / PRODUCTION REPORT

WORK FORCE – CONTRACTOR AND SUBCONTRACTOR

Company	Cumulative Total of Work Hours From Previous Report	Total Hours Today	Total Work Hours From Start of Injection Event
Report Plumbing	10	3	13

EQUIPMENT ON HAND

Description of Equipment	Make/Model/Manufacturer	Equipment ID Number	Inspection Performed By
Manlift #1	Genie GS-1930		Andrew Poras
Harness + Lanyard #1	Falltech	-	A Spilk
Harness + Lanyard #2	Safety Waze	-	A Spilk

COMMENTS (acceptance status, inspection findings, etc.):
site glass / portholes installed

WORK AND/OR TESTS ACCOMPLISHED OR IN PROGRESS

Performed Work / Test for Today:
Leak tested 2 of the viewports. Filled each tank to 80" with no leaks observed.

Planned Work / Test for Tomorrow: None

Planned Work / Test for Next Week: Pipe installation

CHANGED CONDITIONS/DELAY/CONFLICTS ENCOUNTERED (List any conflicts with the project [i.e., scope of work and/or drawings], delays to the project attributable to site and weather conditions, etc.

VISITORS AND DISCUSSIONS: None

QUALITY CONTROL REPORT

MATERIALS DELIVERED TO JOB SITE

Quantity/Volume/ Weight	Description of Materials Received	Make/Model/Manufacturer	Material Lot Number	Inspection Performed By
4	Maxos Glass Borosilicate Site Glass	Maxos	356752	A Spill

COMMENTS (acceptance status, inspection findings, etc.): OK

INSPECTIONS PERFORMED

Task/Activity Inspected	Inspection Performed	Findings
Lift Safety	visual observation	OK

TESTS PERFORMED

Task/Activity Tested	Test Performed	Test Results (Pass/Fail) - Criteria
Site Glass	Leak detection	Pass - No leaks observed

QUALITY ISSUES AND RESOLUTIONS: None

SUBMITTALS INSPECTION / REVIEW

Submittal No.	Submittal Description	Specification/Plan Reference	Submittal Approved?		Comment/Reason/Action
NA	Daily Report	–	Yes ☐	No ☐	Pending
NA	SBO	–	Yes ☐	No ☐	Pending
NA	PTSP	–	Yes ☐	No ☐	Pending

REGULATORY COMPLIANCE REPORT

PERMIT INSPECTIONS PERFORMED: None

WASTE ACCUMULATION/STOCKPILE AREA INSPECTION

Inspection Performed By:	NA	Signature of Inspector:	
Accumulation / Stockpile Area Inspected:			

No of Bins:		No of Tankers		No of Roll-Off Boxes:		No. of Tanks	

Inspection Results:

GENERAL COMMENTS

General Comments~ (rework, directives, etc.):

ATTACHMENTS

List of Attachments: (examples, as applicable: submittals, meeting minutes, safety meeting minutes, COCs, weight tickets, manifests, profiles, rework item list, RFIs, DCNs, photographs, etc.):

Photo Log

NOTE: Write all entries legibly in ink. Line out all unused portions or designate as "not applicable". Preparer signs first and last name on each completed daily report. This form may be filled out electronically and signed electronically.

Alec Spill — PREPARER'S SIGNATURE

13OCT16 — DATE

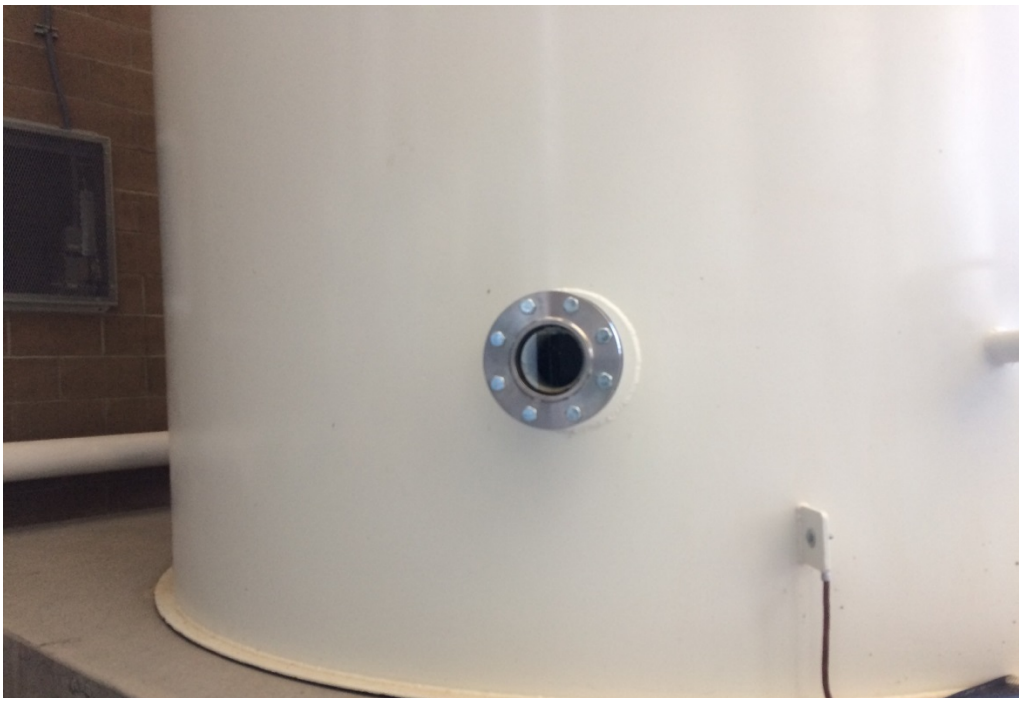

Location: Influent Feed Tank
Description: New Sight Glass Installed on Southwest Wall of Tank
Date: 13 October 2016 Direction: Northeast

Location: Influent Feed Tank
Description: New Sight Glass Installed on Top of Tank
Date: 13 October 2016 Direction: Down

Location: Effluent Feed Tank
Description: New Sight Glass Installed on Northeast Wall of Tank
Date: 13 October 2016 Direction: Southwest

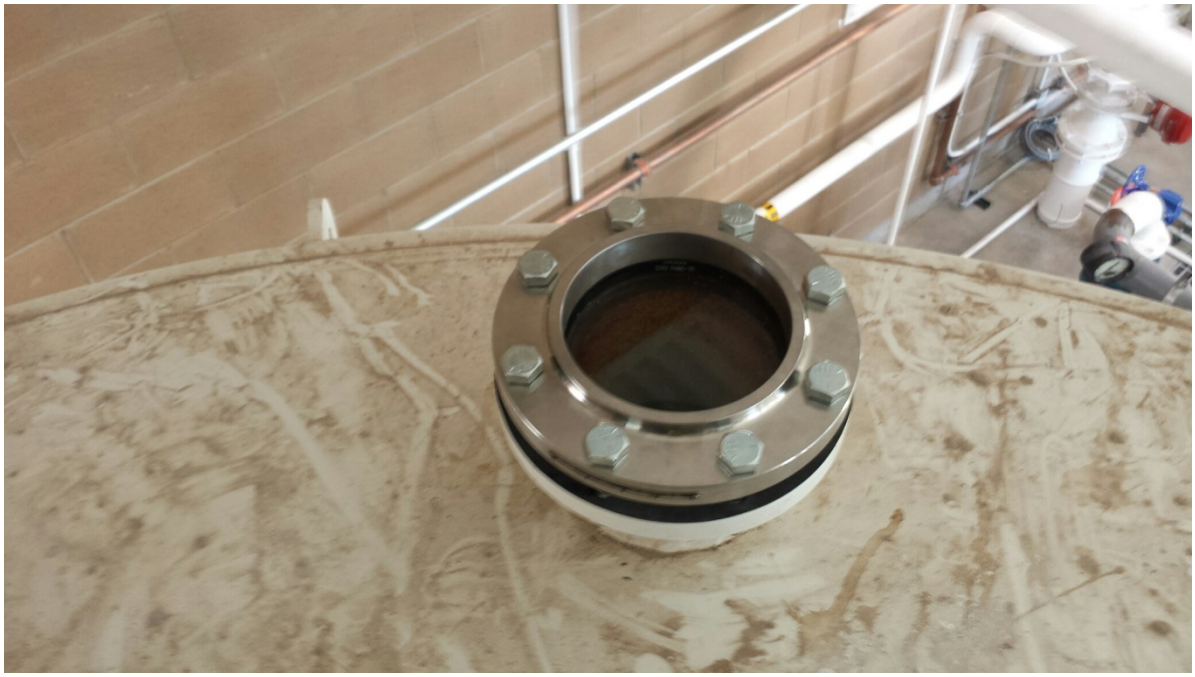

Location: Effluent Feed Tank
Description: New Sight Glass Installed on Top of Tank
Date: 13 October 2016 Direction: Down

DAILY REPORT

(ATTACH ADDITIONAL SHEETS IF NECESSARY)

CONTRACT NAME:	Kirtland AFB Bulk Fuels Facility Expansion of Dissolved Plume GWTS Design	REPORT NO:	009
CONTRACT NUMBER:	W912DR-12-D-0006	REPORT DATE:	~~10~~ 17OCT16
REVISION NUMBER:	-	REVISION DATE:	-
TASK ORDER NUMBER:	DM01	PROJECT NAME / LOCATION:	KAFB, ABQ, NM
PROJECT NUMBER:	62599DM01	PROJECT DESCRIPTION:	KAFB GWTS EXPANSION
PROJECT MANAGER:	Devon Jercinovic	FIELD QUALITY MANAGER:	Alex Spilk
CONSTRUCTION MANAGER:	Matt Bowman	SITE SAFETY MANAGER:	John DeBoca

AM WEATHER:	Cloudy, Breezy, Cool	PM WEATHER:	Hot, light wind Hazey	MAX TEMP (F):	85° F		

SUMMARY OF WORK PERFORMED TODAY

Piping + Pipe fitting installation, Pipe welding

HEALTH AND SAFETY REPORT

SAFETY ACTIONS TAKEN TODAY/SAFETY INSPECTIONS CONDUCTED (Include Observations, Safety Violations, Corrective Instructions Given, Corrective Actions Taken, and Results of Safety Inspections Conducted: Rigging Choker removed from site due to fraying.

TAILGATE TOPICS: stopwork procedure, eyewash, water, MSDS, Muster Area, APP review, overhead hazards, trip hazards

SAFE BEHAVIOR OBSERVATIONS/SELF-ASSESSMENTS:

Safe behavior observed

OPERATIONS / PRODUCTION REPORT

WORK FORCE – CONTRACTOR AND SUBCONTRACTOR

Company	Cumulative Total of Work Hours From Previous Report	Total Hours Today	Total Work Hours From Start of Injection Event
Rupert Plumbing	13	35	48

EQUIPMENT ON HAND

Description of Equipment	Make/Model/Manufacturer	Equipment ID Number	Inspection Performed By
Manlift #1	Genie GS-1930	#1	Andres Poras
Manlift #2	Genie GS-1930	#2	Andres Poras
Forklift	Genie	GTH-5519	Mike Clifford

COMMENTS (acceptance status, inspection findings, etc.):

OK

WORK AND/OR TESTS ACCOMPLISHED OR IN PROGRESS

Performed Work / Test for Today: installed piping, welded pipes

Planned Work / Test for Tomorrow:

More pipe fitting + welding

Planned Work / Test for Next Week:

pipe fitting, hanger installation, welding

CHANGED CONDITIONS/DELAY/CONFLICTS ENCOUNTERED (List any conflicts with the project [i.e., scope of work and/or drawings], delays to the project attributable to site and weather conditions, etc.

VISITORS AND DISCUSSIONS:

QUALITY CONTROL REPORT

MATERIALS DELIVERED TO JOB SITE

Quantity/Volume/ Weight	Description of Materials Received	Make/Model/Manufacturer	Material Lot Number	Inspection Performed By
Many	Various Pipes + fittings	varied		ASPL

COMMENTS (acceptance status, inspection findings, etc.):

INSPECTIONS PERFORMED

Task/Activity Inspected	Inspection Performed	Findings
Pipe installation	visual observation	OK

TESTS PERFORMED

Task/Activity Tested	Test Performed	Test Results (Pass/Fail) - Criteria
None		

QUALITY ISSUES AND RESOLUTIONS:

SUBMITTALS INSPECTION / REVIEW

Submittal No.	Submittal Description	Specification/Plan Reference	Submittal Approved?		Comment/Reason/Action
NA	Daily Report	-	Yes ☐	No ☐	Pending
NA	SBO	-	Yes ☐	No ☐	Pending
NA	PTSP	-	Yes ☐	No ☐	Pending

REGULATORY COMPLIANCE REPORT

PERMIT INSPECTIONS PERFORMED: None

WASTE ACCUMULATION/STOCKPILE AREA INSPECTION

Inspection Performed By:				Signature of Inspector:			
Accumulation / Stockpile Area Inspected:	NA						
No of Bins:		No of Tankers		No of Roll-Off Boxes:		No. of Tanks	

Inspection Results: NA

GENERAL COMMENTS

General Comments~ (rework, directives, etc.):

None

ATTACHMENTS

List of Attachments: (examples, as applicable: submittals, meeting minutes, safety meeting minutes, COCs, weight tickets, manifests, profiles, rework item list, RFIs, DCNs, photographs, etc.):

Safety documentation, photo log

NOTE: Write all entries legibly in ink. Line out all unused portions or designate as "not applicable". Preparer signs first and last name on each completed daily report. This form may be filled out electronically and signed electronically.

Alex Spill — PREPARER'S SIGNATURE

17OCT16 — DATE

Location: Influent Feed Tank Pipe
Description: New Welded Flange for Connection to an Influent Feed Tank (1 of 2)
Date: 17 October 2016 Direction: Down

Location: Influent Feed Tank Pipe
Description: New Welded Flange for Connection to an Influent Feed Tank (2 of 2)
Date: 17 October 2016 Direction: Down

Location: GAC Vessel (2nd from East Wall)
Description: Bolted Manway with Seal
Date: 17 October 2016 Direction: South

Location: GAC Vessel (2nd from East Wall)
Description: Newly Installed Pipe to Connect to Manifold
Date: 17 October 2016 Direction: South

Location: GAC Vessel (1st from East Wall)
Description: Newly Installed Pipe to Connect to Manifold
Date: 17 October 2016 Direction: South

Location: GAC Vessel (1st from East Wall)
Description: Bolted Manway with Seal
Date: 17 October 2016 Direction: South

Location: GAC Vessel (1st from East Wall)
Description: Newly Installed Piping and Fittings for Carbon Change-out
Date: 17 October 2016 Direction: West

Location: GAC Vessel (2nd from East Wall)
Description: Newly Installed Piping and Fittings for Carbon Change-out
Date: 17 October 2016 Direction: East

Location: New Effluent Pump Skid
Description: Shims Installed to Level Pump Skid
Date: 17 October 2016 Direction: West

Location: GAC Vessel (2nd from East Wall)
Description: Newly Installed Piping
Date: 17 October 2016 Direction: Southeast

Location: GAC Vessel (2nd from East Wall)
Description: Air Relief Valve and Piping Installed
Date: 17 October 2016 Direction: South

Location: Influent Piping
Description: Piping was Delivered and Set Temporarily
Date: 17 October 2016 Direction: Northwest

EA ENGINEERING, SCIENCE AND TECHNOLOGY, INC.
SAFETY MEETING REPORT

Date: 10/17/16	Time: 7:00	Duration of meeting: 15 min	Project # 62599M001
Location: KAFB		Task:	

Type of meeting: X Daily ___ Weekly ___ Monthly X Other: INITIAL

Items/Issues discussed:

1. MUSTER AREA	6. MSDS	11. Ladder use & tie-off
2. STOP WORK POLICY	7. PPE	12. FALL PROTECTION
3. FIRST AID KIT LOCATION	8. TRAINING REQUIREMENTS	13. HAND TOOLS
4. EYE WASH LOCATION	9. HOUSEKEEPING	
5. DRINKING WATER	10) EQUIPMENT/PPE INSPECTIONS	

Attach minutes of safety meeting if taken.

Safety questions/issues raised:	Actions/Follow-up needed:
1. TIE-OFF POINTS	No follow up needed Question was Answered
2.	
3.	
4.	
5.	
6.	

Remarks:

Meeting conducted by:

John M. Cde Baca

HEALTH AND SAFETY ACTIVITY REPORT

Site: BULK FUELS FACILITY EXPANSION Location: KAFB

Weather Cond.: _____ Onsite Hours: From _____ To _____

Changes in PPE Levels[1]	Work Operations	Reasons for Change

Site Safety and Health Plan Violations	Corrective Action Specified	Corrective Action Taken [2](yes/no)
RIGGING CHOKER	REMOVE FROM SITE	YES

Observations and Comments:

Completed by: _____ Date:
Site Health and Safety Supervisor

[1]Only SSHO may change PPE levels, using only criteria specified in APP/SSHP.
[2]If a deficiency is noted that cannot be immediately corrected, the SSHO will monitor the progress in correcting the deficiency and will document following:

- Date the deficiency was identified
- Description of the deficiency
- Name of the person responsible for correcting the deficiency
- Projected date of correction
- Actual date of correction.

QUALITY CONTROL

HEALTH AND SAFETY CHECKLIST

Date:

Project Name/Number: BULK FUELS FACILITY EXPANSION

Site: 62599 AM01

Personnel Observed and Locations:

Answer each question by checking the appropriate column (yes, no, or N/A). If "no" is checked, provide an explanation on the form.

Documentation	Yes	No	N/A
1. Is the Accident Prevention Plan (APP) and Site Health and Safety Plan (SSHP) on the Site?	☒	☐	☐
2. Has the SSHP and/or supplement been reviewed, dated, and signed within the last year?	☒	☐	☐
3. Are the tasks being completed reflected in the Supplement?	☒	☐	☐
4. Is there a written acknowledgement that all employees have been briefed on and read the SSHP (signature sheet)?	☒	☐	☐
5. Are the following training records current and available:			
• 40-Hour HAZWOPER for ALL employees?	☐	☐	☒
• 24 Hours Supervised Field Experience?	☒	☐	☐
• 8-Hour HAZWOPER Annual Refresher?	☒	☐	☐
• CPR/First Aid (minimum one person on site)?	☒	☐	☐
• 8-Hour Hazardous Waste Site Supervisor, and refresher?	☒	☐	☐
• Initial Site Health and Safety Briefing?	☒	☐	☐
• Site Health and Safety Briefing for each location or site (record in field log notebook)?	☒	☐	☐
6. Are emergency maps posted at the site and maintained in vehicles?	☒	☐	☐
7. Were fire extinguishers checked on first day?	☒	☐	☐
8. Were applicable Material Safety Data Sheets at the Site (located in IT Sampling Plan)?	☒	☐	☐
9. Are documents current and available that indicate personnel are medically fit to work and wear the required personal protective equipment (if required)?	☐	☐	☒

QUALITY CONTROL

HEALTH AND SAFETY CHECKLIST (continued)

Date:

Project Name/Number:

Site:

	Yes	No	N/A
Observations			
10. Are work zones adequately designated?	☒	☐	☐
11. Is required personal protective equipment available and correctly used, maintained, and stored?	☒	☐	☐
12. Is the following emergency equipment located at each site:	☒	☐	☐
• Fire extinguisher?	☒	☐	☐
• Eye wash (minimal)?	☒	☐	☐
• Communications (walkie talkie or phone)?	☒	☐	☐
• First aid kit?	☒	☐	☐
13. Is the buddy system in use?	☐	☐	☒
14. Are personnel refraining from drinking, chewing, smoking, taking medications, or other hand-to-mouth contact while working in the exclusion zone?	☒	☐	☐
15. Is the site organized to allow the use of lifting equipment, and avoid tripping hazards and spreading contamination?	☒	☐	☐
16. Was a random employee asked if he/she know site hazard and emergency procedures? Asked Rupert Employee	☒	☐	☐

The QC Inspector shall sign this checklist upon completion of all items on the checklist.

QC Inspector Signature:

Date:

EA Engineering, Science, and Technology, Inc.

DAILY SAFETY INSPECTION CHECKLIST (TO BE COMPLETED EACH DAY OF CONSTRUCTION OR HTRW SITE ACTIVITIES)

Site: _____ Prepared by SSHO: _____

Location: _____

Project No.: _____ Project Manager: _____

Client: _____ Date : _____

Rating	Y	N	N/A	Comments/Immediate Corrective Action[1]
Accident Prevention Plan (APP) and Site Safety and Health Plan (SSHP) General Requirements				
Are there new onsite personnel? • Did they receive pre-entry briefing and are their names recorded in field logbook or daily log? • Was the USACE PM made aware of the new personnel. • Required training and medical surveillance documentation received (e.g., 40-hr, 8 hr, etc.)?	X X			
Did personnel sign in/out of site?	X			
Daily tailgate safety meetings conducted and documented?	X			
Were new activities performed today? Were hazards identified, discussed during the daily safety tailgate, and incorporated into revised APP/SSHP?	X			
New materials brought on site? MSDSs available?		X		
Exclusion (EZ), Contamination Reduction (CRZ), and Support Zones (SZ) delineated and enforced?			X	
General housekeeping measures in place to prevent hazards?	X			
Emergency Planning				
Were there any changes to emergency contact names, telephone numbers, or hospital? If so, were site personnel made aware and was information distributed/reposted.		X		No changes made
Adequate safety equipment inventory available?	X			
Fire extinguisher available (monthly inspection of extinguisher will suffice)	X			
Eyewash station(s) functioning and in place (weekly inspection of eye wash station will suffice)?	X			
First aid supplies available (weekly inspection of first aid kit will suffice)?	X			
Communication equipment readily available for emergencies?				
Any reported accidents/incidents at this site? If so, were accident reporting procedures followed?			X	
Air Monitoring				
Monitoring equipment specified in SSHP available and in working order? Air monitoring instrumentation for this site includes – check each if required/on site, note deficiencies in comments: • Combustible gas meter • Organic vapor analyzer • Contaminant specific analyzer for benzene (if total organic vapor concentrations exceed 0.5 ppm)			X	
Monitoring equipment calibrated and calibration records			X	

Y = Satisfactory or Yes; N = Unsatisfactory or No, N/A = Not applicable

Rating	Y	N	N/A	Comments/Immediate Corrective Action[1]
available?				
Environmental and personnel monitoring performed as specified in SSHP?			X	
PPE				
Proper dermal protection worn by EA and subcontracted employees when handling/ contacting hazardous chemicals or contaminated environmental media?			X	
Required PPE (hard hats, safety boots / shoes, eye protection with side shields, hearing protection) being worn by EA and subcontracted employees?	X			
PPE inspection completed by SSHO?	X			
Drill Rig Operations				
Daily rig inspection completed? Any equipment problems?			X	
Drill rigs/elevated equipment maintaining minimum 10-ft distance from energized (50 kV) overhead power lines?			X	
Investigation-derived Waste (IDW)				
Wastes properly staged, secured, and labeled at end of day?			X	

Additional Comments:

John M. Cle Baca
Site Safety and Health Officer's Signature

10/17/16
Date

[1]If a deficiency is noted that cannot be immediately corrected, the SSHO will monitor the progress in correcting the deficiency and will document following:

- Date the deficiency was identified
- Description of the deficiency
- Name of the person responsible for correcting the deficiency
- Projected date of correction
- Actual date of correction.

EA Engineering, Science, and Technology, Inc.

INITIAL SAFETY INSPECTION CHECKLIST
(TO BE COMPLETED FIRST DAY OF SITE ACTIVITIES)

Site: BULK FUELS FACILITY EXPAN
Location: KAFB
Project No.: 62599DM01
Client: U.S. ARMY CORP OF ENGINEERS

Prepared by SSHO: John M. Cole Baca
Project Manager: DEVON JERCINOVIC
Date: 10/17/16

Rating	S	U	N/A	Comments/Immediate Corrective Action[1]
Accident Prevention Plan (APP) and Site Safety and Health Plan (SSHP) General Requirements				
Was a pre-entry safety briefing conducted? If so, did it include the following:				
• Site personnel and roles and authority to stop work?	X			
• Competent person(s) for identifying hazards?	X			
• Disclosure of potential hazards?	X			
• Emergency response procedures including rally point, contacts, location and directions of nearest medical support (hospital)?	X			
• Use of fire extinguishers	X			
• Vehicle rules/regulations?	X			
• Equipment to be used and those personnel qualified to use the equipment?	X			
• Methods of decontamination?			X	
• Storing/staging of wastes and materials?			X	
• Location/use of Material Safety Data Sheets (MSDS)?	X			
• Site control, including requirements for documenting entry into the site and procedures for entry and exit into work zones?	X			
• Task specific personal protective equipment (PPE) requirements?	X			
• Applicable standard operating procedures?	X			
• Environmental monitoring requirements and action levels?			X	
• Responsibilities for safety of personnel/property?	X			
• Safe work practices?	X			
• Procedures for maintaining personnel and site sanitation?	X			
Approved APP/SSHP on site?	X			
APP/SSHP compliance agreement form signed by onsite personnel, including subcontractors?	X			
New activities or hazards identified and incorporated into revised APP/SSHP?	X			
Names of onsite personnel recorded on site sign in sheet?	X			
Applicable MSDSs on site or available?	X			
Hazard labeling practices currently being used?			X	
Records of daily inspections available for review?				
Daily tailgate safety meetings conducted and documented?	X			
Onsite personnel meet SSHP requirements for medical examinations, fit testing, and training (including subcontractors)?			X	
Documentation of training, medical examinations, and fit tests available from employer (as applicable)?			X	
Compliance with specified safe work practices?	X			
Exclusion (EZ), Contamination Reduction (CRZ), and Support			X	

S = Satisfactory; U = Unsatisfactory, N/A = Not applicable

Rating	S	U	N/A	Comments/Immediate Corrective Action[1]
Zones (SZ) delineated and enforced?			X	
Windsock, flag, or ribbons in place to indicate wind direction?			X	
SZ located upwind from EZ and CRZ, as practicable?			X	
Emergency Planning				
Emergency telephone numbers posted?	X			
Emergency telephone numbers up to date?	X			
Emergency route to hospital posted?	X			
Local emergency providers notified of site activities?			X	
Fire extinguisher on site, of adequate size, and inspected within past month?	X			
Review weather emergency procedures?			X	
Adequate safety equipment inventory available?	X			
First aid provider and first aid supplies available?	X			
Eyewash station(s) functioning and in place?	X			
Communication equipment readily available for emergencies?	X			
Any reported accidents/incidents at this site? If so, are the accident/incident reports available for review?			X	
Air Monitoring				
Monitoring equipment specified in SSHP available and in working order (See Instrumentation list below)?			X	
Monitoring equipment calibrated and calibration records available?			X	
Personnel know how to operate monitoring equipment and equipment manuals available on site?			X	
Environmental and personnel monitoring performed as specified in SSHP?			X	
Air monitoring instrumentation includes: • Combustible gas meter? • Organic vapor analyzer?			X	
PPE (SSHO to enforce PPE requirements for EA and subcontractor employess)				
Proper dermal protection worn when handling/ contacting hazardous chemicals or contaminated environmental media?			X	
Required PPE (hard hats, safety boots / shoes, eye protection with side shields) being worn?	X			
PPE inspection completed by SSHO?	X			
Hearing protection available? Worn when required?	X			
Heavy Equipment Operations				
Equipment operators experienced/properly trained?			X	
Dust control measures implemented in EZ, as necessary?			X	
Equipment regularly inspected and maintained?			X	
Utility lines located and marked prior to construction activities?			X	
Clearance/digging permits kept onsite and available for review?			X	
Drill rigs/elevated equipment maintaining minimum 10-ft distance from energized (50 kV) overhead power lines?			X	
When backing a vehicle up is a spotter used?			X	
Supplies				

S = Satisfactory; U = Unsatisfactory, N/A = Not applicable

Rating	S	U	N/A	Comments/Immediate Corrective Action[1]
Decontamination equipment and supplies on site?			X	
Fire extinguishers (functioning, inspected, and in field vehicles)?			X	
Spill cleanup supplies on site?			X	
Investigation-derived Waste (IDW)				
Wastes properly disposed of?			X	
Designated location for drummed IDW?			X	
IDW containers properly labeled?			X	

Additional Comments:

John M. Cole Baca
Site Safety and Health Officer's Signature

10/17/16
Date

[1]If a deficiency is noted that cannot be immediately corrected, the SSHO will monitor the progress in correcting the deficiency and will document following:

- Date the deficiency was identified
- Description of the deficiency
- Name of the person responsible for correcting the deficiency
- Projected date of correction
- Actual date of correction.

DAILY REPORT

(ATTACH ADDITIONAL SHEETS IF NECESSARY)

CONTRACT NAME:	Kirtland AFB Bulk Fuels Facility Expansion of Dissolved Plume GWTS Design	REPORT NO:	010
CONTRACT NUMBER:	W912DR-12-D-0006	REPORT DATE:	18OCT16
REVISION NUMBER:	-	REVISION DATE:	-
TASK ORDER NUMBER:	DM01	PROJECT NAME / LOCATION:	KAFB ABQ NM
PROJECT NUMBER:	62599DM01	PROJECT DESCRIPTION:	KAFB GWTS Expansion
PROJECT MANAGER:	Devon Jercinovic	FIELD QUALITY MANAGER:	Alex Spille
CONSTRUCTION MANAGER:	Matt Bowman	SITE SAFETY MANAGER:	John CdeBaca

AM WEATHER:	Cool, Breezy Hazey Cool	PM WEATHER:	Hot Breezy Clear	MAX TEMP (F):	80		

SUMMARY OF WORK PERFORMED TODAY

Pipe fitting, installation, and hanger prep

HEALTH AND SAFETY REPORT

SAFETY ACTIONS TAKEN TODAY/SAFETY INSPECTIONS CONDUCTED (Include Observations, Safety Violations, Corrective Instructions Given, Corrective Actions Taken, and Results of Safety Inspections Conducted:

OK

TAILGATE TOPICS: Double lanyards to maintain safety protocol, work area access control, tool management, housekeeping

SAFE BEHAVIOR OBSERVATIONS/SELF-ASSESSMENTS:

Safe Behavior Observed

OPERATIONS / PRODUCTION REPORT

WORK FORCE – CONTRACTOR AND SUBCONTRACTOR

Company	Cumulative Total of Work Hours From Previous Report	Total Hours Today	Total Work Hours From Start of Injection Event
Rupert Plumbing	48	28	76
Tasman Geo	8	7	15
Mick-Rich	0	4	4

EQUIPMENT ON HAND

Description of Equipment	Make/Model/Manufacturer	Equipment ID Number	Inspection Performed By
Manlift #1	Genie GS-1930	#1	Andrew Poras
Manlift #2	Genie GS-1930	#2	Andrew Poras
Forklift	Genie	GTH-5519	Mike Ciliscorn

COMMENTS (acceptance status, inspection findings, etc.):

OK

WORK AND/OR TESTS ACCOMPLISHED OR IN PROGRESS

Performed Work / Test for Today: 7 pipe hangers were ~~installed overhead~~ drilled for pipe braces on south wall, 2 pipe sections were hung overhead along East wall, on eastern-most GAC and ARV, ARV pipe, and carbon exchange pipe were installed, ID plates were added to the new tanks, section of discharge pipe connected to western-most tank.

Planned Work / Test for Tomorrow:

More pipe fitting and installation

Planned Work / Test for Next Week:

Same as above

CHANGED CONDITIONS/DELAY/CONFLICTS ENCOUNTERED (List any conflicts with the project [i.e., scope of work and/or drawings], delays to the project attributable to site and weather conditions, etc.

VISITORS AND DISCUSSIONS:

QUALITY CONTROL REPORT

MATERIALS DELIVERED TO JOB SITE

Quantity/Volume/ Weight	Description of Materials Received	Make/Model/Manufacturer	Material Lot Number	Inspection Performed By
Many	Various Pipes + Fittings	Varied		A Spill

COMMENTS (acceptance status, inspection findings, etc.):

INSPECTIONS PERFORMED

Task/Activity Inspected	Inspection Performed	Findings
Pipe installation	Visual observation	OK

TESTS PERFORMED

Task/Activity Tested	Test Performed	Test Results (Pass/Fail) - Criteria
None		

QUALITY ISSUES AND RESOLUTIONS:

SUBMITTALS INSPECTION / REVIEW

Submittal No.	Submittal Description	Specification/Plan Reference	Submittal Approved?		Comment/Reason/Action
NA	Daily Report	–	Yes ☐	No ☐	Pending
NA	SBO	–	Yes ☐	No ☐	Pending
NA	PTSP	–	Yes ☐	No ☐	Pending

REGULATORY COMPLIANCE REPORT

PERMIT INSPECTIONS PERFORMED: None

WASTE ACCUMULATION/STOCKPILE AREA INSPECTION

Inspection Performed By:		Signature of Inspector:	
Accumulation / Stockpile Area Inspected:	NA		

No of Bins:		No of Tankers		No of Roll-Off Boxes:		No. of Tanks	

Inspection Results: NA

GENERAL COMMENTS

General Comments~ (rework, directives, etc.):

None

ATTACHMENTS

List of Attachments: (examples, as applicable: submittals, meeting minutes, safety meeting minutes, COCs, weight tickets, manifests, profiles, rework item list, RFIs, DCNs, photographs, etc.):

Safety documentation, Photo logs

NOTE: Write all entries legibly in ink. Line out all unused portions or designate as "not applicable". Preparer signs first and last name on each completed daily report. This form may be filled out electronically and signed electronically.

Alex Spill — PREPARER'S SIGNATURE

18OCT16 — DATE

Location: Pipe Rack Along East Wall Ceiling
Description: Newly Installed Piping
Date: 18 October 2016 Direction: Up

Location: Pipe Rack Along South Wall Ceiling
Description: Newly Drilled Holes for Pipe Support Clamps
Date: 18 October 2016 Direction: Up

Location: New Holding Tank
Description: Newly Installed Name Plate
Date: 18 October 2016 Direction: North

Location: New Holding Tank
Description: Newly Installed Name Plate
Date: 18 October 2016 Direction: North

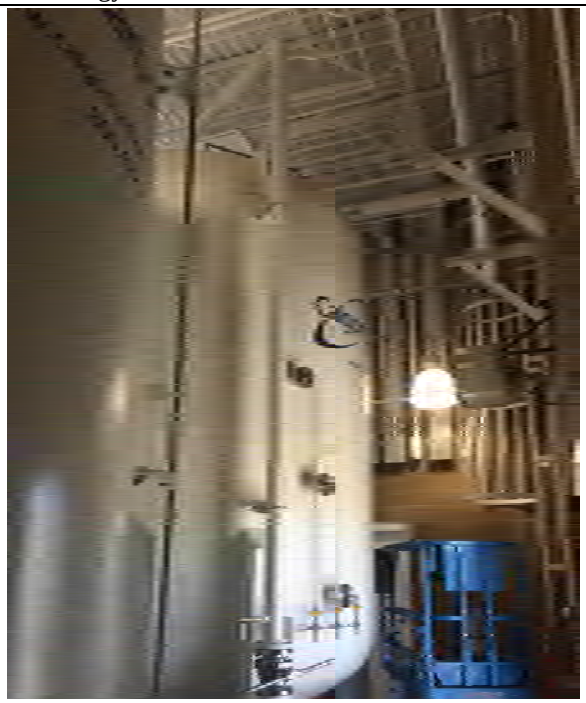

Location: GAC Vessel (1st from East Wall)
Description: Newly Installed Carbon Change-Out Pipe and ARV Drain Pipe
Date: 18 October 2016 Direction: East

Location: GAC Vessel (1st from East Wall)
Description: Newly Installed ARV and ARV Drain Pipe
Date: 18 October 2016 Direction: South

Location: Holding Tank (1st from West Wall)
Description: Newly Installed Effluent Piping
Date: 18 October 2016 Direction: North

EA Engineering, Science, and Technology, Inc.

DAILY SAFETY INSPECTION CHECKLIST (TO BE COMPLETED EACH DAY OF CONSTRUCTION OR HTRW SITE ACTIVITIES)

Site: BULK FUELS FACILITY EXPANSION
Location: KAFB
Project No.: 62599OM01
Client: U.S. ARMY CORP OF ENGINEERS

Prepared by SSHO: John Cde Baca
Project Manager: DEVON JERCINOVIC
Date: 10/18/16

Rating	Y	N	N/A	Comments/Immediate Corrective Action[1]
Accident Prevention Plan (APP) and Site Safety and Health Plan (SSHP) General Requirements				
Are there new onsite personnel? • Did they receive pre-entry briefing and are their names recorded in field logbook or daily log? • Was the USACE PM made aware of the new personnel. • Required training and medical surveillance documentation received (e.g., 40-hr, 8 hr, etc.)?		X		
Did personnel sign in/out of site?	X			
Daily tailgate safety meetings conducted and documented?	X			
Were new activities performed today? Were hazards identified, discussed during the daily safety tailgate, and incorporated into revised APP/SSHP?		X		No New activities
New materials brought on site? MSDSs available?		X		
Exclusion (EZ), Contamination Reduction (CRZ), and Support Zones (SZ) delineated and enforced?			X	
General housekeeping measures in place to prevent hazards?	X			
Emergency Planning				
Were there any changes to emergency contact names, telephone numbers, or hospital? If so, were site personnel made aware and was information distributed/reposted.		X		
Adequate safety equipment inventory available?	X			
Fire extinguisher available (monthly inspection of extinguisher will suffice)	X			
Eyewash station(s) functioning and in place (weekly inspection of eye wash station will suffice)?	X			
First aid supplies available (weekly inspection of first aid kit will suffice)?	X			
Communication equipment readily available for emergencies?	X			
Any reported accidents/incidents at this site? If so, were accident reporting procedures followed?			X	
Air Monitoring				
Monitoring equipment specified in SSHP available and in working order? Air monitoring instrumentation for this site includes – check each if required/on site, note deficiencies in comments: • Combustible gas meter • Organic vapor analyzer • Contaminant specific analyzer for benzene (if total organic vapor concentrations exceed 0.5 ppm)			X	
Monitoring equipment calibrated and calibration records			X	

Y = Satisfactory or Yes; N = Unsatisfactory or No, N/A = Not applicable

Rating	Y	N	N/A	Comments/Immediate Corrective Action[1]
available?			X	
Environmental and personnel monitoring performed as specified in SSHP?			X	
PPE				
Proper dermal protection worn by EA and subcontracted employees when handling/ contacting hazardous chemicals or contaminated environmental media?			X	
Required PPE (hard hats, safety boots / shoes, eye protection with side shields, hearing protection) being worn by EA and subcontracted employees?	X			
PPE inspection completed by SSHO?	X			
Drill Rig Operations				
Daily rig inspection completed? Any equipment problems?			X	
Drill rigs/elevated equipment maintaining minimum 10-ft distance from energized (50 kV) overhead power lines?			X	
Investigation-derived Waste (IDW)				
Wastes properly staged, secured, and labeled at end of day?			X	

Additional Comments:

John M. Cd Baca

Site Safety and Health Officer's Signature

10/18/16

Date

[1]If a deficiency is noted that cannot be immediately corrected, the SSHO will monitor the progress in correcting the deficiency and will document following:

- Date the deficiency was identified
- Description of the deficiency
- Name of the person responsible for correcting the deficiency
- Projected date of correction
- Actual date of correction.

Y = Satisfactory or Yes; N = Unsatisfactory or No, N/A = Not applicable

EA ENGINEERING, SCIENCE AND TECHNOLOGY, INC.
SAFETY MEETING REPORT

Date: 10/18/16	Time: 07:00	Duration of meeting: 10min	Project # 62599DM01
Location: KA6B		Task: PIPE INSTALLATION	

Type of meeting: X Daily ___ Weekly ___ Monthly ___ Other: _____

Items/Issues discussed:

1. 100% Fall Protection - Dual lanyard
2. EYE PROTECTION (NON-TINTED IN THE BUILDING)
3. Tool Control at Heights (Ensure tools don't drop)
4. Access Control during pipe installation above doors
5.

Attach minutes of safety meeting if taken.

Safety questions/issues raised:	Actions/Follow-up needed:
1.	
2.	
3.	
4.	
5.	
6.	

Remarks: No safety violations!

Meeting conducted by:
John Cde Baca

HEALTH AND SAFETY ACTIVITY REPORT

Site: Bulk Fuels Facility Expansion Location: KAFB

Weather Cond.: Clear Onsite Hours: From 0700 To 14:30

Changes in PPE Levels[1]	Work Operations	Reasons for Change
Added lanyard for Transition from Scissor Lift to Tanks	Pipe Installation	Ensure 100% Fall Protection

Site Safety and Health Plan Violations	Corrective Action Specified	Corrective Action Taken [2](yes/no)
None		

Observations and Comments:

Completed by: John Cde Baca Date: 10/18/16
Site Health and Safety Supervisor

[1]Only SSHO may change PPE levels, using only criteria specified in APP/SSHP.
[2]If a deficiency is noted that cannot be immediately corrected, the SSHO will monitor the progress in correcting the deficiency and will document following:

- Date the deficiency was identified
- Description of the deficiency
- Name of the person responsible for correcting the deficiency
- Projected date of correction
- Actual date of correction.

DAILY REPORT

(ATTACH ADDITIONAL SHEETS IF NECESSARY)

CONTRACT NAME:	Kirtland AFB Bulk Fuels Facility Expansion of Dissolved Plume GWTS Design	REPORT NO:	011
CONTRACT NUMBER:	W912DR-12-D-0006	REPORT DATE:	19OCT16
REVISION NUMBER:	-	REVISION DATE:	-
TASK ORDER NUMBER:	DM01	PROJECT NAME / LOCATION:	KAFB ABQ NM
PROJECT NUMBER:	62599DM01	PROJECT DESCRIPTION:	KAFB GWTS EXPANSION
PROJECT MANAGER:	Devon Jercinovic	FIELD QUALITY MANAGER:	Alex Spilka
CONSTRUCTION MANAGER:	Matt Bowman	SITE SAFETY MANAGER:	John Ede-Baea

AM WEATHER:	Cool, Hazey, Breezy	PM WEATHER:	warm, Hazey Breezy	MAX TEMP (F):	72	

SUMMARY OF WORK PERFORMED TODAY

pipefitting and installation, hange prep, connect GAC manifold

HEALTH AND SAFETY REPORT

SAFETY ACTIONS TAKEN TODAY/SAFETY INSPECTIONS CONDUCTED (Include Observations, Safety Violations, Corrective Instructions Given, Corrective Actions Taken, and Results of Safety Inspections Conducted:

OK

TAILGATE TOPICS: Emergency extraction- from a height procedure,

SAFE BEHAVIOR OBSERVATIONS/SELF-ASSESSMENTS:

Safe Behavior Observed

OPERATIONS / PRODUCTION REPORT

WORK FORCE – CONTRACTOR AND SUBCONTRACTOR

Company	Cumulative Total of Work Hours From Previous Report	Total Hours Today	Total Work Hours From Start of Injection Event
Rupert Plumbing	76	26	102
Jasman Geo	15	8	23
Mick Rich	4	4	8
Techsas	~~8~~ 16	~~8~~ 8	~~16~~ 24

EQUIPMENT ON HAND

Description of Equipment	Make/Model/Manufacturer	Equipment ID Number	Inspection Performed By
Manlift #1	Genie GS - 1930	#1	Andres Poras
Manlift #2	Genie GS - 1930	#2	Andres Poras
Forklift	Genie	GTH - 5519	Mike Clifcorn

COMMENTS (acceptance status, inspection findings, etc.):

OK

WORK AND/OR TESTS ACCOMPLISHED OR IN PROGRESS

Performed Work / Test for Today: Installed overhead piping, installed some of the GAC manifold piping

Planned Work / Test for Tomorrow:

None

Planned Work / Test for Next Week:

Install pipe hangers and piping

CHANGED CONDITIONS/DELAY/CONFLICTS ENCOUNTERED (List any conflicts with the project [i.e., scope of work and/or drawings], delays to the project attributable to site and weather conditions, etc. minor adjustment to GDE manifold piping needed

VISITORS AND DISCUSSIONS: Amy Sanchez of USACE

QUALITY CONTROL REPORT

MATERIALS DELIVERED TO JOB SITE

Quantity/Volume/ Weight	Description of Materials Received	Make/Model/Manufacturer	Material Lot Number	Inspection Performed By
Many	Various Pipes	Varied		A Spilk

COMMENTS (acceptance status, inspection findings, etc.):

INSPECTIONS PERFORMED

Task/Activity Inspected	Inspection Performed	Findings
Pipe Installation	Visual observation	OK

TESTS PERFORMED

Task/Activity Tested	Test Performed	Test Results (Pass/Fail) - Criteria
None		

QUALITY ISSUES AND RESOLUTIONS:

SUBMITTALS INSPECTION / REVIEW

Submittal No.	Submittal Description	Specification/Plan Reference	Submittal Approved?		Comment/Reason/Action
NA	Daily Report	-	Yes ☐	No ☐	Pending
NA	SBO	-	Yes ☐	No ☐	Pending
NA	PTSP	-	Yes ☐	No ☐	Pending

REGULATORY COMPLIANCE REPORT

PERMIT INSPECTIONS PERFORMED: None

WASTE ACCUMULATION/STOCKPILE AREA INSPECTION

Inspection Performed By:		Signature of Inspector:	
Accumulation / Stockpile Area Inspected:	NA		

No of Bins:		No of Tankers		No of Roll-Off Boxes:		No. of Tanks	

Inspection Results: NA

GENERAL COMMENTS

General Comments~ (rework, directives, etc.):

None

ATTACHMENTS

List of Attachments: (examples, as applicable: submittals, meeting minutes, safety meeting minutes, COCs, weight tickets, manifests, profiles, rework item list, RFIs, DCNs, photographs, etc.):

Safety Documentation and Photo Log

NOTE: Write all entries legibly in ink. Line out all unused portions or designate as "not applicable". Preparer signs first and last name on each completed daily report. This form may be filled out electronically and signed electronically.

Alex Spill — PREPARER'S SIGNATURE

19OCT16 — DATE

Location: Pipe Rack Along North and East Wall Ceiling
Description: Newly Installed Piping
Date: 19 October 2016 Direction: Up

Location: Pipe Rack Along East Wall Ceiling
Description: Newly Installed Piping
Date: 19 October 2016 Direction: Up

Location: Pipe Rack Along South Wall Ceiling
Description: Newly Installed Piping
Date: 19 October 2016 Direction: Up

Location: Pipe Rack Along South Wall Ceiling
Description: Newly Installed Piping
Date: 19 October 2016 Direction: Up

Location: Pipe Rack Along North Wall Ceiling
Description: Newly Installed Piping
Date: 19 October 2016 Direction: Up

Location: GAC Vessels
Description: Partially Installed Pipe Manifold for GAC Vessels
Date: 19 October 2016 Direction: South

EA Engineering, Science, and Technology, Inc.

DAILY SAFETY INSPECTION CHECKLIST (TO BE COMPLETED EACH DAY OF CONSTRUCTION OR HTRW SITE ACTIVITIES)

Site: BULK FUELS FACILITY EXPANSION
Location: KAFB
Project No.: 62599 DM01
Client: US ARMY CORP OF ENGINEERS

Prepared by SSHO: John CdeBaca
Project Manager: DEVON JERCINOVIC
Date: 10/19/16

Rating	Y	N	N/A	Comments/Immediate Corrective Action[1]
Accident Prevention Plan (APP) and Site Safety and Health Plan (SSHP) General Requirements				
Are there new onsite personnel? • Did they receive pre-entry briefing and are their names recorded in field logbook or daily log? • Was the USACE PM made aware of the new personnel. • Required training and medical surveillance documentation received (e.g., 40-hr, 8 hr, etc.)?		X		
Did personnel sign in/out of site?	X			
Daily tailgate safety meetings conducted and documented?	X			
Were new activities performed today? Were hazards identified, discussed during the daily safety tailgate, and incorporated into revised APP/SSHP?		X		
New materials brought on site? MSDSs available?		X		
Exclusion (EZ), Contamination Reduction (CRZ), and Support Zones (SZ) delineated and enforced?			X	
General housekeeping measures in place to prevent hazards?	X			
Emergency Planning				
Were there any changes to emergency contact names, telephone numbers, or hospital? If so, were site personnel made aware and was information distributed/reposted.		X		
Adequate safety equipment inventory available?	X			
Fire extinguisher available (monthly inspection of extinguisher will suffice)	X			
Eyewash station(s) functioning and in place (weekly inspection of eye wash station will suffice)?	X			
First aid supplies available (weekly inspection of first aid kit will suffice)?	X			
Communication equipment readily available for emergencies?	X			
Any reported accidents/incidents at this site? If so, were accident reporting procedures followed?			X	
Air Monitoring				
Monitoring equipment specified in SSHP available and in working order? Air monitoring instrumentation for this site includes – check each if required/on site, note deficiencies in comments: • Combustible gas meter • Organic vapor analyzer • Contaminant specific analyzer for benzene (if total organic vapor concentrations exceed 0.5 ppm)			X	
Monitoring equipment calibrated and calibration records			X	

Y = Satisfactory or Yes; N = Unsatisfactory or No, N/A = Not applicable

Rating	Y	N	N/A	Comments/Immediate Corrective Action[1]
available?			X	
Environmental and personnel monitoring performed as specified in SSHP?			X	
PPE				
Proper dermal protection worn by EA and subcontracted employees when handling/ contacting hazardous chemicals or contaminated environmental media?			X	
Required PPE (hard hats, safety boots / shoes, eye protection with side shields, hearing protection) being worn by EA and subcontracted employees?	X			
PPE inspection completed by SSHO?	X			
Drill Rig Operations				
Daily rig inspection completed? Any equipment problems?			X	
Drill rigs/elevated equipment maintaining minimum 10-ft distance from energized (50 kV) overhead power lines?			X	
Investigation-derived Waste (IDW)				
Wastes properly staged, secured, and labeled at end of day?			X	

Additional Comments:

John M. Cde Baca

Site Safety and Health Officer's Signature

10/19/16

Date

[1]If a deficiency is noted that cannot be immediately corrected, the SSHO will monitor the progress in correcting the deficiency and will document following:

- Date the deficiency was identified
- Description of the deficiency
- Name of the person responsible for correcting the deficiency
- Projected date of correction
- Actual date of correction.

Y = Satisfactory or Yes; N = Unsatisfactory or No, N/A = Not applicable

EA ENGINEERING, SCIENCE AND TECHNOLOGY, INC.
SAFETY MEETING REPORT

Date: 10/19/16	Time: 0700	Duration of meeting: 10 min	Project # 62599.0001
Location: KAFB		Task: INSTALLATION OF PIPE	

Type of meeting: X Daily ___ Weekly ___ Monthly ___ Other: _____

Items/Issues discussed:

1. Activities for the day (Scope of Work)
2. PLAN For Fall Arrest Rescue
3. BLOCKING OF SOUTH DOORS FOR OVERHEAD PIPE INSTALLATION
4. HOUSEKEEPING
5.

Attach minutes of safety meeting if taken.

Safety questions/issues raised:	Actions/Follow-up needed:
1. NONE	
2.	
3.	
4.	
5.	
6.	

Remarks: No safety violations!

Meeting conducted by:

John Cde Baca

HEALTH AND SAFETY ACTIVITY REPORT

Site: BULK FUELS FACILITY EXPANSION Location: KAFB

Weather Cond.: CLEAR Onsite Hours: From 0645 To 1530

Changes in PPE Levels[1]	Work Operations	Reasons for Change
None		

Site Safety and Health Plan Violations	Corrective Action Specified	Corrective Action Taken [2] (yes/no)
None		

Observations and Comments:

Completed by: John Cole Baca Date: 10/19/16
Site Health and Safety Supervisor

[1]Only SSHO may change PPE levels, using only criteria specified in APP/SSHP.
[2]If a deficiency is noted that cannot be immediately corrected, the SSHO will monitor the progress in correcting the deficiency and will document following:

- Date the deficiency was identified
- Description of the deficiency
- Name of the person responsible for correcting the deficiency
- Projected date of correction
- Actual date of correction.

DAILY REPORT

(ATTACH ADDITIONAL SHEETS IF NECESSARY)

CONTRACT NAME:	Kirtland AFB Bulk Fuels Facility Expansion of Dissolved Plume GWTS Design	REPORT NO:	012
CONTRACT NUMBER:	W912DR-12-D-0006	REPORT DATE:	20OCT16
REVISION NUMBER:	-	REVISION DATE:	-
TASK ORDER NUMBER:	DM01	PROJECT NAME / LOCATION:	KAFB ABQ NM
PROJECT NUMBER:	62599DM01	PROJECT DESCRIPTION:	KAFB GWTS EXPANSION
PROJECT MANAGER:	Devon Jercinovic	FIELD QUALITY MANAGER:	Alex Spill
CONSTRUCTION MANAGER:	Matt Bowman	SITE SAFETY MANAGER:	John Cde Baca

AM WEATHER:	Cool, windy Hazey	PM WEATHER:	Cool, windy Hazey	MAX TEMP (F):	68°		

SUMMARY OF WORK PERFORMED TODAY

Angle Iron and Plates Delivered to Laydown YARD.

HEALTH AND SAFETY REPORT

SAFETY ACTIONS TAKEN TODAY/SAFETY INSPECTIONS CONDUCTED (Include Observations, Safety Violations, Corrective Instructions Given, Corrective Actions Taken, and Results of Safety Inspections Conducted: None

TAILGATE TOPICS: slips/trips/falls, 911 procedures, location of safety equipment

SAFE BEHAVIOR OBSERVATIONS/SELF-ASSESSMENTS: Safe Behavior Observed

OPERATIONS / PRODUCTION REPORT

WORK FORCE – CONTRACTOR AND SUBCONTRACTOR

Company	Cumulative Total of Work Hours From Previous Report	Total Hours Today	Total Work Hours From Start of Injection Event
Mick Rich	4	1	5

EQUIPMENT ON HAND

Description of Equipment	Make/Model/Manufacturer	Equipment ID Number	Inspection Performed By
None			

COMMENTS (acceptance status, inspection findings, etc.):

OK

WORK AND/OR TESTS ACCOMPLISHED OR IN PROGRESS

Performed Work / Test for Today: None, only materials delivered

Planned Work / Test for Tomorrow:

None

Planned Work / Test for Next Week:

Pipe Hanger + Pipe installation

CHANGED CONDITIONS/DELAY/CONFLICTS ENCOUNTERED (List any conflicts with the project [i.e., scope of work and/or drawings], delays to the project attributable to site and weather conditions, etc.

VISITORS AND DISCUSSIONS:

Brenda Herman + Joel Lazzeri from EA

QUALITY CONTROL REPORT

MATERIALS DELIVERED TO JOB SITE

Quantity/Volume/ Weight	Description of Materials Received	Make/Model/Manufacturer	Material Lot Number	Inspection Performed By
Various	Red angle iron + plates	—	—	A Spilk

COMMENTS (acceptance status, inspection findings, etc.):

INSPECTIONS PERFORMED

Task/Activity Inspected	Inspection Performed	Findings
None		

TESTS PERFORMED

Task/Activity Tested	Test Performed	Test Results (Pass/Fail) - Criteria
None		

QUALITY ISSUES AND RESOLUTIONS:

NA

SUBMITTALS INSPECTION / REVIEW

Submittal No.	Submittal Description	Specification/Plan Reference	Submittal Approved?		Comment/Reason/Action
NA	Daily Report	–	Yes ☐	No ☐	Pending
NA	SBO	–	Yes ☐	No ☐	Pending
NA	PTSP	–	Yes ☐	No ☐	Pending

REGULATORY COMPLIANCE REPORT

PERMIT INSPECTIONS PERFORMED:

None

WASTE ACCUMULATION/STOCKPILE AREA INSPECTION

Inspection Performed By:		Signature of Inspector:	
Accumulation / Stockpile Area Inspected:	NA		

No of Bins:		No of Tankers		No of Roll-Off Boxes:		No. of Tanks	

Inspection Results:

NA

GENERAL COMMENTS

General Comments~ (rework, directives, etc.): None

ATTACHMENTS

List of Attachments: (examples, as applicable: submittals, meeting minutes, safety meeting minutes, COCs, weight tickets, manifests, profiles, rework item list, RFIs, DCNs, photographs, etc.): Photo Log

NOTE: Write all entries legibly in ink. Line out all unused portions or designate as "not applicable". Preparer signs first and last name on each completed daily report. This form may be filled out electronically and signed electronically.

Alex Spill — PREPARER'S SIGNATURE

25 OCT 16 — DATE

Location: Laydown Yard South of GWTS Building
Description: Newly Delivered Angle Iron and Plates for Pipe Brackets
Date: 20 October 2016 Direction: Down

Location: Laydown Yard South of GWTS Building
Description: Newly Delivered Angle Iron and Plates for Pipe Brackets
Date: 20 October 2016 Direction: West

DAILY REPORT

(ATTACH ADDITIONAL SHEETS IF NECESSARY)

CONTRACT NAME:	Kirtland AFB Bulk Fuels Facility Expansion of Dissolved Plume GWTS Design	REPORT NO:	013
CONTRACT NUMBER:	W912DR-12-D-0006	REPORT DATE:	24OCT16
REVISION NUMBER:	-	REVISION DATE:	-
TASK ORDER NUMBER:	DM01	PROJECT NAME / LOCATION:	KAFB ABQ NM
PROJECT NUMBER:	62599DM01	PROJECT DESCRIPTION:	KAFB GWTS EXPANSION
PROJECT MANAGER:	Devon Jercinovic	FIELD QUALITY MANAGER:	Alex Spilk
CONSTRUCTION MANAGER:	Luke Ries	SITE SAFETY MANAGER:	John Cde Baca

AM WEATHER:	cool, partly Cloudy, Breezy	PM WEATHER:	warm, mostly cloudy, breezy	MAX TEMP (F):	78		

SUMMARY OF WORK PERFORMED TODAY

Pipe hanger construction and installation, install GAC manifold pipes

HEALTH AND SAFETY REPORT

SAFETY ACTIONS TAKEN TODAY/SAFETY INSPECTIONS CONDUCTED (Include Observations, Safety Violations, Corrective Instructions Given, Corrective Actions Taken, and Results of Safety Inspections Conducted: None

TAILGATE TOPICS: welding safety, screens, slip/trip/falls, lift safety

SAFE BEHAVIOR OBSERVATIONS/SELF-ASSESSMENTS: Safe behavior observed

OPERATIONS / PRODUCTION REPORT

WORK FORCE – CONTRACTOR AND SUBCONTRACTOR

Company	Cumulative Total of Work Hours From Previous Report	Total Hours Today	Total Work Hours From Start of Injection Event
Techsas	24	8	32
Mick Rick	5	36	41
Rupert	102	39	141

EQUIPMENT ON HAND

Description of Equipment	Make/Model/Manufacturer	Equipment ID Number	Inspection Performed By
Manlift #1	Genie GS-1930	#1	Mike Clifcorn
Manlift #2	Genie GS - 1930	#2	Mike Clifcorn
Manlift #3	Skyjack SJIII 3219	150967	Mike McIlrath
Drill	DW565		Alex Spilk
ARC welder	Lincoln Electric	Classic 300D	Mike McIlrath

COMMENTS (acceptance status, inspection findings, etc.):

OK

WORK AND/OR TESTS ACCOMPLISHED OR IN PROGRESS

Performed Work / Test for Today: ~~Installed overhead pipehangers~~ Installed pipe hangers, installed piping on GAC manifold

Planned Work / Test for Tomorrow:
Pipe + Pipe hanger installation

Planned Work / Test for Next Week:
Pipe + Pipe hanger installation

CHANGED CONDITIONS/DELAY/CONFLICTS ENCOUNTERED (List any conflicts with the project [i.e., scope of work and/or drawings], delays to the project attributable to site and weather conditions, etc. anchors for hangers were discussed

VISITORS AND DISCUSSIONS: ~~None~~ Hilti recommends changing from HLC-H ½x3 to HLC-H ½x2¼ for hange bolts

QUALITY CONTROL REPORT

MATERIALS DELIVERED TO JOB SITE

Quantity/Volume/ Weight	Description of Materials Received	Make/Model/Manufacturer	Material Lot Number	Inspection Performed By
several	Piping (Various)	white		A Spith

COMMENTS (acceptance status, inspection findings, etc.):

INSPECTIONS PERFORMED

Task/Activity Inspected	Inspection Performed	Findings
Piping	Visual inspection	OK

TESTS PERFORMED

Task/Activity Tested	Test Performed	Test Results (Pass/Fail) - Criteria
None		

QUALITY ISSUES AND RESOLUTIONS:
None

SUBMITTALS INSPECTION / REVIEW

Submittal No.	Submittal Description	Specification/Plan Reference	Submittal Approved?		Comment/Reason/Action
NA	Daily Report	–	Yes ☐	No ☐	Pending
NA	SBO	–	Yes ☐	No ☐	Pending
NA	PTSP	–	Yes ☐	No ☐	Pending

REGULATORY COMPLIANCE REPORT

PERMIT INSPECTIONS PERFORMED: None

WASTE ACCUMULATION/STOCKPILE AREA INSPECTION

Inspection Performed By:		Signature of Inspector:	
Accumulation / Stockpile Area Inspected:	None		

No of Bins:		No of Tankers		No of Roll-Off Boxes:		No. of Tanks	

Inspection Results:
NA

GENERAL COMMENTS

General Comments~ (rework, directives, etc.):

None

ATTACHMENTS

List of Attachments: (examples, as applicable: submittals, meeting minutes, safety meeting minutes, COCs, weight tickets, manifests, profiles, rework item list, RFIs, DCNs, photographs, etc.):

Photo log and safety documentation

NOTE: Write all entries legibly in ink. Line out all unused portions or designate as "not applicable". Preparer signs first and last name on each completed daily report. This form may be filled out electronically and signed electronically.

Alec Spill — PREPARER'S SIGNATURE

24OCT16 — DATE

Location: Laydown Yard South of GWTS Building
Description: Newly Delivered Pipe Sections
Date: 24 October 2016 Direction: Southwest

Location: New GAC Manifold
Description: Newly Installed Manifold Piping
Date: 24 October 2016 Direction: South

Location: New GAC Manifold
Description: Newly Installed Manifold Piping
Date: 24 October 2016 Direction: Southeast

Location: New Effluent Tank
Description: Newly Installed and Constructed Pipe Hanger
Date: 24 October 2016 Direction: Northwest

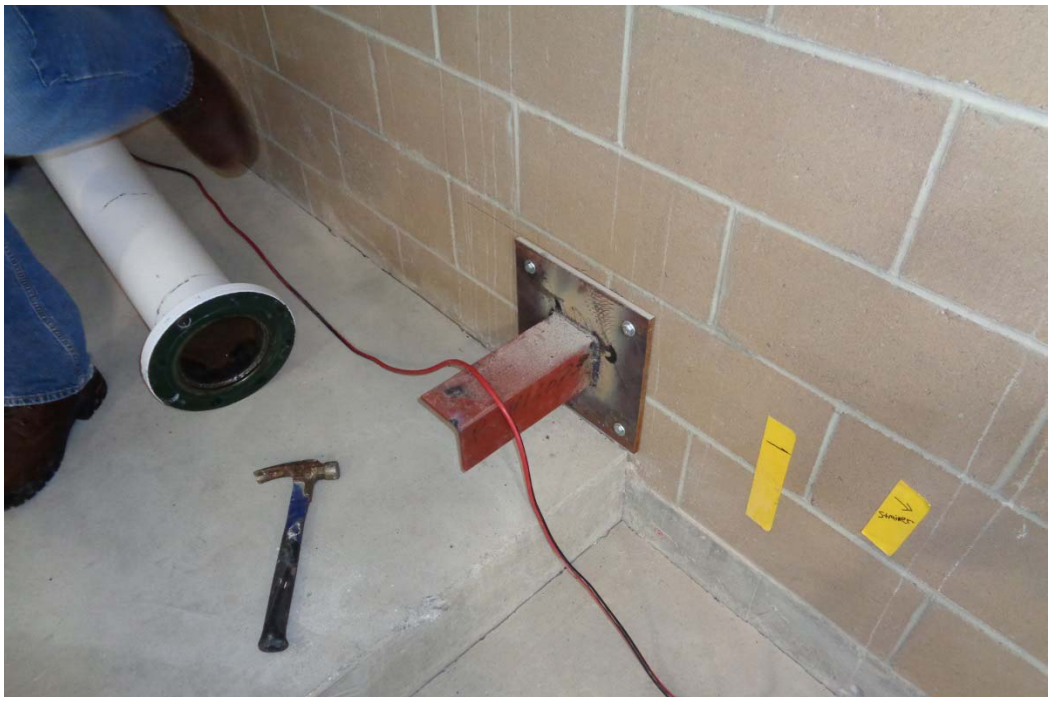

Location: Piping Along North Wall
Description: Newly Installed and Constructed Pipe Hanger
Date: 24 October 2016 Direction: Down

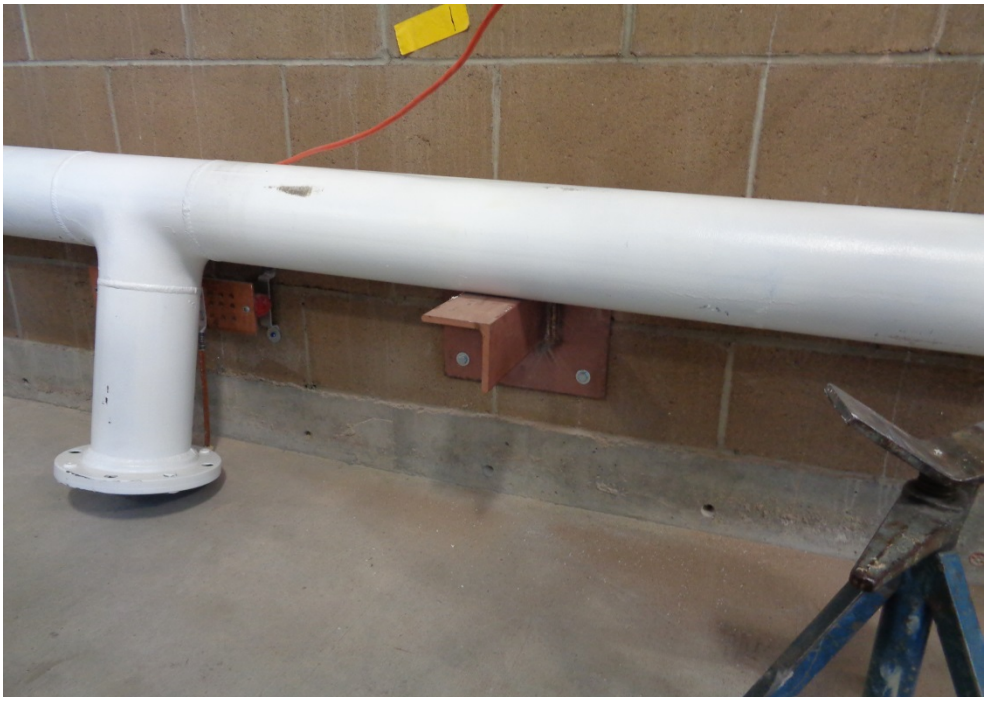

Location: Piping Along North Wall
Description: Newly Installed and Constructed Pipe Hanger
Date: 24 October 2016 Direction: North

Location: Piping Along North Wall
Description: Newly Installed and Constructed Pipe Hanger
Date: 24 October 2016 Direction: Up

Location: Piping Along North Wall
Description: Newly Installed and Constructed Pipe Hanger
Date: 24 October 2016 Direction: Up

EA Engineering, Science, and Technology, Inc.

DAILY SAFETY INSPECTION CHECKLIST (TO BE COMPLETED EACH DAY OF CONSTRUCTION OR HTRW SITE ACTIVITIES)

Site: BULK FUELS FACILITY EXPANSION
Location: KAFB BLDG 19150
Project No.: 625990M01
Client: U.S. ARMY CORP OF ENGINEERS

Prepared by SSHO: John Cde Baca
Project Manager: DEVON JERCINOVIC
Date: 10/24/16

Rating	Y	N	N/A	Comments/Immediate Corrective Action[1]
Accident Prevention Plan (APP) and Site Safety and Health Plan (SSHP) General Requirements				
Are there new onsite personnel? • Did they receive pre-entry briefing and are their names recorded in field logbook or daily log? • Was the USACE PM made aware of the new personnel. • Required training and medical surveillance documentation received (e.g., 40-hr, 8 hr, etc.)?	X X X	X		
Did personnel sign in/out of site?	X			
Daily tailgate safety meetings conducted and documented?	X			
Were new activities performed today? Were hazards identified, discussed during the daily safety tailgate, and incorporated into revised APP/SSHP?	X			
New materials brought on site? MSDSs available?		X		
Exclusion (EZ), Contamination Reduction (CRZ), and Support Zones (SZ) delineated and enforced?			X	
General housekeeping measures in place to prevent hazards?	X			
Emergency Planning				
Were there any changes to emergency contact names, telephone numbers, or hospital? If so, were site personnel made aware and was information distributed/reposted.		X		
Adequate safety equipment inventory available?	X			
Fire extinguisher available (monthly inspection of extinguisher will suffice)	X			
Eyewash station(s) functioning and in place (weekly inspection of eye wash station will suffice)?	X			
First aid supplies available (weekly inspection of first aid kit will suffice)?	X			
Communication equipment readily available for emergencies?	X			
Any reported accidents/incidents at this site? If so, were accident reporting procedures followed?			X	
Air Monitoring				
Monitoring equipment specified in SSHP available and in working order? Air monitoring instrumentation for this site includes – check each if required/on site, note deficiencies in comments: • Combustible gas meter • Organic vapor analyzer • Contaminant specific analyzer for benzene (if total organic vapor concentrations exceed 0.5 ppm)			X	
Monitoring equipment calibrated and calibration records			X	

Y = Satisfactory or Yes; N = Unsatisfactory or No, N/A = Not applicable

Rating	Y	N	N/A	Comments/Immediate Corrective Action[1]
available?			X	
Environmental and personnel monitoring performed as specified in SSHP?			X	
PPE				
Proper dermal protection worn by EA and subcontracted employees when handling/ contacting hazardous chemicals or contaminated environmental media?			X	
Required PPE (hard hats, safety boots / shoes, eye protection with side shields, hearing protection) being worn by EA and subcontracted employees?	X			
PPE inspection completed by SSHO?	X			
Drill Rig Operations				
Daily rig inspection completed? Any equipment problems?			X	
Drill rigs/elevated equipment maintaining minimum 10-ft distance from energized (50 kV) overhead power lines?			X	
Investigation-derived Waste (IDW)				
Wastes properly staged, secured, and labeled at end of day?			X	

Additional Comments:

John M. Cd Baca
Site Safety and Health Officer's Signature

10/24/16
Date

[1]If a deficiency is noted that cannot be immediately corrected, the SSHO will monitor the progress in correcting the deficiency and will document following:

- Date the deficiency was identified
- Description of the deficiency
- Name of the person responsible for correcting the deficiency
- Projected date of correction
- Actual date of correction.

Y = Satisfactory or Yes; N = Unsatisfactory or No, N/A = Not applicable

EA ENGINEERING, SCIENCE AND TECHNOLOGY, INC.
SAFETY MEETING REPORT

Date: 10/24/16	Time: 06:45	Duration of meeting: 15min	Project # 62599.0M01
Location: KAFB BLDG 19150		Task: PIPE RACK & PIPE INSTALLATION	

Type of meeting: X Daily ___ Weekly ___ Monthly ___ Other: _____

Items/Issues discussed:

1. PPE
2. STOP WORK POLICY
3. MUSTER AREA
4. FIRST AID KIT
5. EYE WASH STATION
6. DRINKING WATER
7. MSDS
8. TRAINING (Forklift, Scissor)
9) HOUSEKEEPING
10) INSPECTIONS (Fire, EXTINGUISHERS, SCISSOR LIFTS
11) LADDER USE
12) HOT WORK PERMIT
13) WELDING REQUIREMENTS

Attach minutes of safety meeting if taken.

Safety questions/issues raised:	Actions/Follow-up needed:
1. USE OF BOOM Lift w/combustion Engine	No Follow up needed Question was answered
2.	
3.	
4.	
5.	
6.	

Remarks:

Meeting conducted by:

JOHN COE BACA

HEALTH AND SAFETY ACTIVITY REPORT

Site: BULK FUELS FACILITY EXPANSION Location: KAFB BLDG 19150

Weather Cond.: CLEAR Onsite Hours: From 06:45 To 15:00

Changes in PPE Levels[1]	Work Operations	Reasons for Change
No changes		

Site Safety and Health Plan Violations	Corrective Action Specified	Corrective Action Taken [2](yes/no)
No safety violations		

Observations and Comments:
Use of ladder for pipe rack installation was high risk, contractor decided to use boom lift to access areas instead.

Completed by: JOHN CDE BACA Date: 10/24/16
Site Health and Safety Supervisor

[1]Only SSHO may change PPE levels, using only criteria specified in APP/SSHP.
[2]If a deficiency is noted that cannot be immediately corrected, the SSHO will monitor the progress in correcting the deficiency and will document following:

- Date the deficiency was identified
- Description of the deficiency
- Name of the person responsible for correcting the deficiency
- Projected date of correction
- Actual date of correction.

DAILY REPORT

(ATTACH ADDITIONAL SHEETS IF NECESSARY)

CONTRACT NAME:	Kirtland AFB Bulk Fuels Facility Expansion of Dissolved Plume GWTS Design	REPORT NO:	014
CONTRACT NUMBER:	W912DR-12-D-0006	REPORT DATE:	25 OCT 16
REVISION NUMBER:	-	REVISION DATE:	-
TASK ORDER NUMBER:	DM01	PROJECT NAME / LOCATION:	KAFB ABQ NM
PROJECT NUMBER:	62599DM01	PROJECT DESCRIPTION:	KAFB GWTS EXPANSION
PROJECT MANAGER:	Devon Jercinovic	FIELD QUALITY MANAGER:	Kevin McKeage
CONSTRUCTION MANAGER:	Luke Riet	SITE SAFETY MANAGER:	John Cde Baca

AM WEATHER:	Cloudy, light wind, cool	PM WEATHER:	Mostly Cloudy light wind, cool	MAX TEMP (F): 73°	

SUMMARY OF WORK PERFORMED TODAY

Installed a GAC manifold pipe, pipe hangers, ~~and~~ an overhead pipe, and hose hanger. ~~Pipe tunn~~ Kea

HEALTH AND SAFETY REPORT

SAFETY ACTIONS TAKEN TODAY/SAFETY INSPECTIONS CONDUCTED (Include Observations, Safety Violations, Corrective Instructions Given, Corrective Actions Taken, and Results of Safety Inspections Conducted:

Safe work practices observed, no issues noted.

TAILGATE TOPICS:

Lift safety, slips, trips, falls, eyewash use, safety equipment, weekly safety.

SAFE BEHAVIOR OBSERVATIONS/SELF-ASSESSMENTS:

Safe behavior Observed

OPERATIONS / PRODUCTION REPORT

WORK FORCE – CONTRACTOR AND SUBCONTRACTOR

Company	Cumulative Total of Work Hours From Previous Report	Total Hours Today	Total Work Hours From Start of Injection Event
Tech sons	32	8	40
Mick Rich	41	24	65
Rupert	141	16	157

EQUIPMENT ON HAND

Description of Equipment	Make/Model/Manufacturer	Equipment ID Number	Inspection Performed By
Man Lift #1	Genie GS-1930		Mike Clifcorn
Man Lift #2	Genie GS-1930		Mike Clifcorn
Man Lift #3	Skyjack SJIII 3219		Mike McIlrath
Drill	DW 565		Alex Spiller
ARC Welder	Lincoln Electric		Mike McIlrath
Articulated Lift	JLG 400S	148370	Mike McIlrath

COMMENTS (acceptance status, inspection findings, etc.):

OK

WORK AND/OR TESTS ACCOMPLISHED OR IN PROGRESS

Performed Work / Test for Today: Installed a GAC manifold pipe, pipe hangers, an overhead pipe, and hose hanger.

Planned Work / Test for Tomorrow:

Pipe + pipe hanger installation

Planned Work / Test for Next Week:

Pipe + pipe hanger installation

CHANGED CONDITIONS/DELAY/CONFLICTS ENCOUNTERED (List any conflicts with the project [i.e., scope of work and/or drawings], delays to the project attributable to site and weather conditions, etc. Field change to pipe hanger welding above the instrument feed ~~tank~~ tank.

VISITORS AND DISCUSSIONS:

Trent Simpler

QUALITY CONTROL REPORT

MATERIALS DELIVERED TO JOB SITE

Quantity/Volume/ Weight	Description of Materials Received	Make/Model/Manufacturer	Material Lot Number	Inspection Performed By
None				

COMMENTS (acceptance status, inspection findings, etc.): None

INSPECTIONS PERFORMED

Task/Activity Inspected	Inspection Performed	Findings
Piping + Pipe hangers	Visual Inspection	OK

TESTS PERFORMED

Task/Activity Tested	Test Performed	Test Results (Pass/Fail) - Criteria
None		

QUALITY ISSUES AND RESOLUTIONS: None

SUBMITTALS INSPECTION / REVIEW

Submittal No.	Submittal Description	Specification/Plan Reference	Submittal Approved?		Comment/Reason/Action
N-A	Daily Report	–	Yes ☐	No ☐	Pending
N-A	SBO	–	Yes ☐	No ☐	Pending
N-A	PTSP	–	Yes ☐	No ☐	Pending

REGULATORY COMPLIANCE REPORT

PERMIT INSPECTIONS PERFORMED: None

WASTE ACCUMULATION/STOCKPILE AREA INSPECTION

Inspection Performed By:				Signature of Inspector:			
Accumulation / Stockpile Area Inspected:	None						
No of Bins:		No of Tankers		No of Roll-Off Boxes:		No. of Tanks	

Inspection Results:

NA

GENERAL COMMENTS

General Comments~ (rework, directives, etc.): None

ATTACHMENTS

List of Attachments: (examples, as applicable: submittals, meeting minutes, safety meeting minutes, COCs, weight tickets, manifests, profiles, rework item list, RFIs, DCNs, photographs, etc.): Photo log and Safety Documentation

NOTE: Write all entries legibly in ink. Line out all unused portions or designate as "not applicable". Preparer signs first and last name on each completed daily report. This form may be filled out electronically and signed electronically.

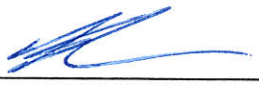

PREPARER'S SIGNATURE

25OCT16

DATE

Location: New GAC Manifold
Description: Newly Installed Manifold Piping
Date: 25 October 2016 Direction: South

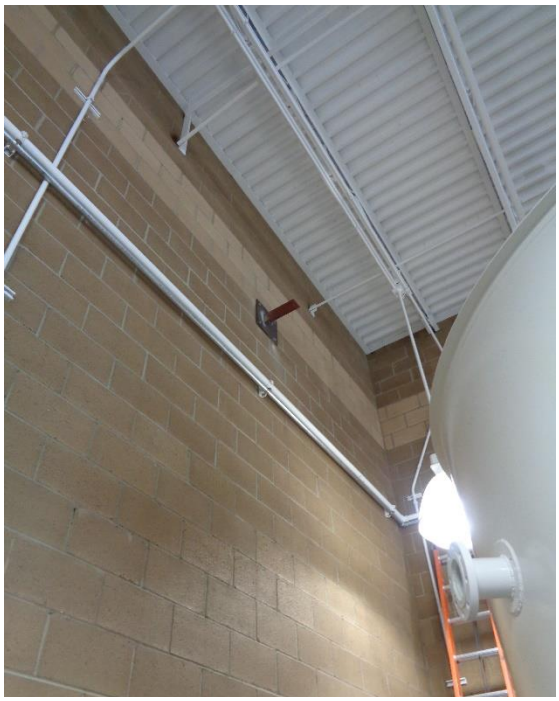

Location: West Wall
Description: Newly Installed Pipe Hanger
Date: 25 October 2016 Direction: Northwest

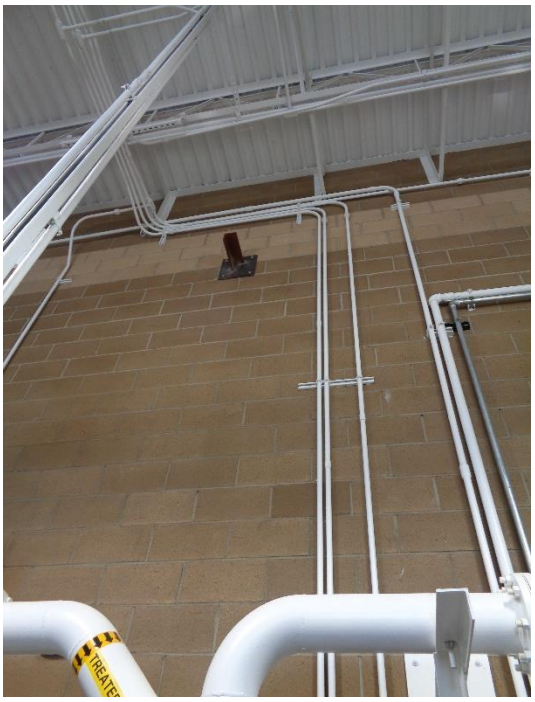

Location: West Wall
Description: Newly Installed Pipe Hanger
Date: 25 October 2016 Direction: West

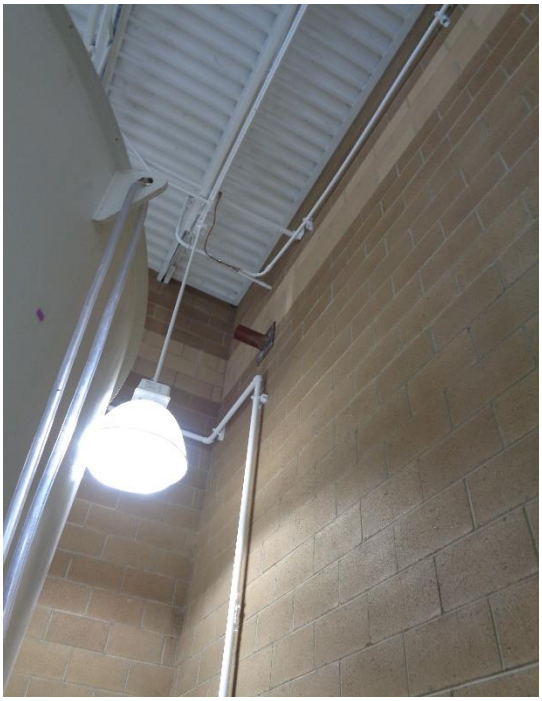

Location: West Wall
Description: Newly Installed Pipe Hanger
Date: 25 October 2016 Direction: Southwest

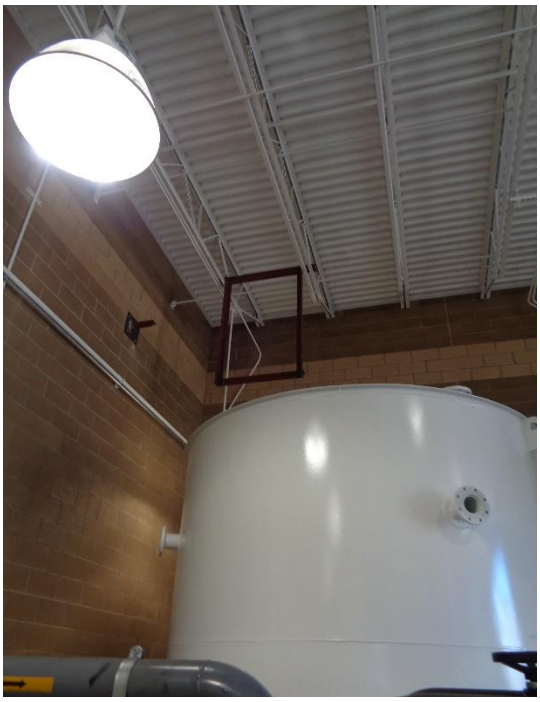

Location: Overhead of New Effluent Tank
Description: Newly Installed and Constructed Pipe Hanger
Date: 25 October 2016 Direction: Northwest

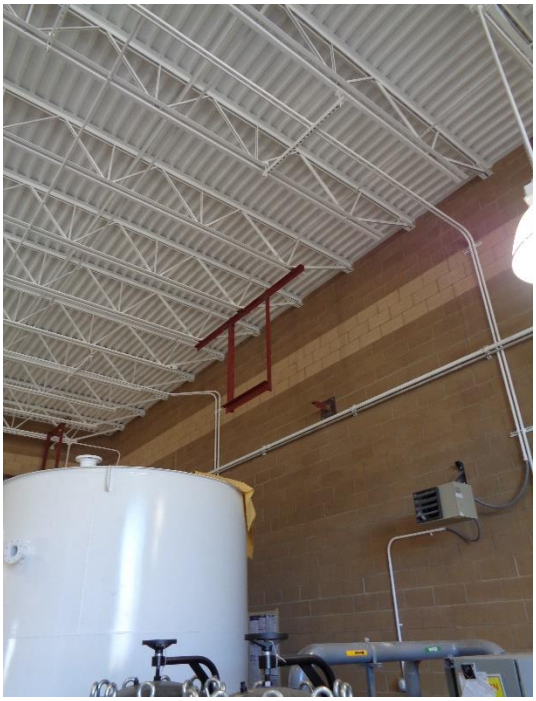

Location: Overhead of New Influent Tank
Description: Newly Installed and Constructed Pipe Hanger
Date: 25 October 2016 Direction: Northwest

Location: Overhead of New Influent Pump Skid
Description: Newly Installed and Constructed Pipe Hangers
Date: 25 October 2016 Direction: North

Location: Piping Along South Wall
Description: Newly Installed Pipe
Date: 25 October 2016 Direction: South

Location: South of the Control Room Door on the East Wall
Description: Newly Installed Eye Wash Station
Date: 25 October 2016 Direction: East

EA Engineering, Science, and Technology, Inc.

DAILY SAFETY INSPECTION CHECKLIST (TO BE COMPLETED EACH DAY OF CONSTRUCTION OR HTRW SITE ACTIVITIES)

Site: BULK FUELS FACILITY EXPANS
Location: KAFB BLDG 19150
Project No.: 62599DM01
Client: U.S. ARMY CORP OF ENGINEERS

Prepared by SSHO: JOHN CDE BACA
Project Manager: DEVON JERCINOVIC
Date: 10/25/16

Rating	Y	N	N/A	Comments/Immediate Corrective Action[1]
Accident Prevention Plan (APP) and Site Safety and Health Plan (SSHP) General Requirements				
Are there new onsite personnel? • Did they receive pre-entry briefing and are their names recorded in field logbook or daily log? • Was the USACE PM made aware of the new personnel. • Required training and medical surveillance documentation received (e.g., 40-hr, 8 hr, etc.)?		X	X X X	
Did personnel sign in/out of site?	X			
Daily tailgate safety meetings conducted and documented?	X			
Were new activities performed today? Were hazards identified, discussed during the daily safety tailgate, and incorporated into revised APP/SSHP?	X			Boom lift used today. Reviewed hazards and mitigation.
New materials brought on site? MSDSs available?		X		
Exclusion (EZ), Contamination Reduction (CRZ), and Support Zones (SZ) delineated and enforced?			X	
General housekeeping measures in place to prevent hazards?	X			
Emergency Planning				
Were there any changes to emergency contact names, telephone numbers, or hospital? If so, were site personnel made aware and was information distributed/reposted.		X		
Adequate safety equipment inventory available?	X			
Fire extinguisher available (monthly inspection of extinguisher will suffice)	X			
Eyewash station(s) functioning and in place (weekly inspection of eye wash station will suffice)?	X			New Eyewash installed on east wall.
First aid supplies available (weekly inspection of first aid kit will suffice)?	X			
Communication equipment readily available for emergencies?	X			
Any reported accidents/incidents at this site? If so, were accident reporting procedures followed?			X	
Air Monitoring				
Monitoring equipment specified in SSHP available and in working order? Air monitoring instrumentation for this site includes – check each if required/on site, note deficiencies in comments: • Combustible gas meter • Organic vapor analyzer • Contaminant specific analyzer for benzene (if total organic vapor concentrations exceed 0.5 ppm)			X	
Monitoring equipment calibrated and calibration records			X	

Y = Satisfactory or Yes; N = Unsatisfactory or No, N/A = Not applicable

Rating	Y	N	N/A	Comments/Immediate Corrective Action[1]
available?			X	
Environmental and personnel monitoring performed as specified in SSHP?			X	
PPE				
Proper dermal protection worn by EA and subcontracted employees when handling/ contacting hazardous chemicals or contaminated environmental media?			X	
Required PPE (hard hats, safety boots / shoes, eye protection with side shields, hearing protection) being worn by EA and subcontracted employees?	X			
PPE inspection completed by SSHO?	X			
Drill Rig Operations				
Daily rig inspection completed? Any equipment problems?			X	
Drill rigs/elevated equipment maintaining minimum 10-ft distance from energized (50 kV) overhead power lines?			X	
Investigation-derived Waste (IDW)				
Wastes properly staged, secured, and labeled at end of day?			X	

Additional Comments:

Jose M. Cedeño

Site Safety and Health Officer's Signature

10/25/16

Date

[1]If a deficiency is noted that cannot be immediately corrected, the SSHO will monitor the progress in correcting the deficiency and will document following:

- Date the deficiency was identified
- Description of the deficiency
- Name of the person responsible for correcting the deficiency
- Projected date of correction
- Actual date of correction.

EA ENGINEERING, SCIENCE AND TECHNOLOGY, INC.
SAFETY MEETING REPORT

Date: 10/25/16	**Time:** 0700	**Duration of meeting:** 10 min	**Project #** 62599.0101
Location: KAFB Bldg 19150		**Task:** Pipe & Pipe Rack Installation	

Type of meeting: X Daily ___ Weekly ___ Monthly ___ Other: _____

Items/Issues discussed:

1. Glove Use - Ensure All Personnel are using Gloves
2. New Eyewash Installed Today
3. Reminded everyone of the Muster Area Location
4. Boom Lift (Inspection, Tie-off, Adequate Ventilation
5. Fire Blanket Protection of Equipment & Utilities

Attach minutes of safety meeting if taken.

Safety questions/issues raised:	Actions/Follow-up needed:
1. Closure & Barricading of door for over-head work	Doors were locked and barricaded
3.	
4.	
5.	
6.	

Remarks:

Meeting conducted by:

John Coe Baca

HEALTH AND SAFETY ACTIVITY REPORT

Site: BULK FUELS FACILITY EXPANSION Location: KAFB BLDG 19150

Weather Cond.: CLOUDY Onsite Hours: From 06:45 To 1515

Changes in PPE Levels[1]	Work Operations	Reasons for Change
No change		

Site Safety and Health Plan Violations	Corrective Action Specified	Corrective Action Taken [2](yes/no)
No safety violation		

Observations and Comments:

Completed by: JOHN CODE BACA Date: 10/25/16
Site Health and Safety Supervisor

[1]Only SSHO may change PPE levels, using only criteria specified in APP/SSHP.
[2]If a deficiency is noted that cannot be immediately corrected, the SSHO will monitor the progress in correcting the deficiency and will document following:

- Date the deficiency was identified
- Description of the deficiency
- Name of the person responsible for correcting the deficiency
- Projected date of correction
- Actual date of correction.

DAILY REPORT

(ATTACH ADDITIONAL SHEETS IF NECESSARY)

CONTRACT NAME:	Kirtland AFB Bulk Fuels Facility Expansion of Dissolved Plume GWTS Design	REPORT NO:	015
CONTRACT NUMBER:	W912DR-12-D-0006	REPORT DATE:	26 OCT 16
REVISION NUMBER:	-	REVISION DATE:	-
TASK ORDER NUMBER:	DM01	PROJECT NAME / LOCATION:	KAFB ABQ NM
PROJECT NUMBER:	62599DM01	PROJECT DESCRIPTION:	KAFB GWTS EXPANSION
PROJECT MANAGER:	Devon Jercinovic	FIELD QUALITY MANAGER:	Kevin McKeage
CONSTRUCTION MANAGER:	Luke Riet	SITE SAFETY MANAGER:	John Cde Baca

AM WEATHER:	Cool, clear light wind	PM WEATHER:	Cool, clear light wind.	MAX TEMP (F):	75°

SUMMARY OF WORK PERFORMED TODAY

Installed pipe hangers and piping.

HEALTH AND SAFETY REPORT

SAFETY ACTIONS TAKEN TODAY/SAFETY INSPECTIONS CONDUCTED (Include Observations, Safety Violations, Corrective Instructions Given, Corrective Actions Taken, and Results of Safety Inspections Conducted:

Safe work practices observed, no issues noted.

TAILGATE TOPICS:

Welding Safety, Lift Safety, New eyewash, slips, trips, falls, etc.

SAFE BEHAVIOR OBSERVATIONS/SELF-ASSESSMENTS:

Safe behavior observed.

OPERATIONS / PRODUCTION REPORT

WORK FORCE – CONTRACTOR AND SUBCONTRACTOR

Company	Cumulative Total of Work Hours From Previous Report	Total Hours Today	Total Work Hours From Start of Injection Event
Technisas	40	6	46
Mick Rich	65	7	72
Rupert	157	8	165

EQUIPMENT ON HAND

Description of Equipment	Make/Model/Manufacturer	Equipment ID Number	Inspection Performed By
Manlift #1	Genie GS-1930		Andres Porras
Manlift #2	Genie GS-1930		Andres Porras
Arc Welder	Lincoln Electric		Mike McIlrath
Articulated Lift	JLG 400S	148370	Mike McIlrath
Forklift	Genie 5519		Chris Angster

COMMENTS (acceptance status, inspection findings, etc.):

OK

WORK AND/OR TESTS ACCOMPLISHED OR IN PROGRESS

Performed Work / Test for Today:

Installed Pipe hangers and piping.

Planned Work / Test for Tomorrow:

Pipe installation + Painting

Planned Work / Test for Next Week:

Pipe installation + Painting

CHANGED CONDITIONS/DELAY/CONFLICTS ENCOUNTERED (List any conflicts with the project [i.e., scope of work and/or drawings], delays to the project attributable to site and weather conditions, etc.: Field change to pipe hanger weld above the new GAC Vessels. Field change to pipe hanger above the effluent skid pump, hanger lengthened and moved slightly northward to allow for the opening of the bag filter housing.

VISITORS AND DISCUSSIONS: Painters arrived to see site.

QUALITY CONTROL REPORT

MATERIALS DELIVERED TO JOB SITE

Quantity/Volume/ Weight	Description of Materials Received	Make/Model/Manufacturer	Material Lot Number	Inspection Performed By
None				

COMMENTS (acceptance status, inspection findings, etc.): None

INSPECTIONS PERFORMED

Task/Activity Inspected	Inspection Performed	Findings
Piping + Pipe hangers	Visual Inspection	OK

TESTS PERFORMED

Task/Activity Tested	Test Performed	Test Results (Pass/Fail) - Criteria
None		

QUALITY ISSUES AND RESOLUTIONS: None

SUBMITTALS INSPECTION / REVIEW

Submittal No.	Submittal Description	Specification/Plan Reference	Submittal Approved?		Comment/Reason/Action
N-A	Daily Report	-	Yes ☐	No ☐	Pending
N-A	SBO	-	Yes ☐	No ☐	Pending
N-A	PTSP	-	Yes ☐	No ☐	Pending

REGULATORY COMPLIANCE REPORT

PERMIT INSPECTIONS PERFORMED: None

WASTE ACCUMULATION/STOCKPILE AREA INSPECTION

Inspection Performed By:				Signature of Inspector:			
Accumulation / Stockpile Area Inspected:	None						
No of Bins:		No of Tankers		No of Roll-Off Boxes:		No. of Tanks	

Inspection Results: NA

GENERAL COMMENTS

General Comments~ (rework, directives, etc.): None

ATTACHMENTS

List of Attachments: (examples, as applicable: submittals, meeting minutes, safety meeting minutes, COCs, weight tickets, manifests, profiles, rework item list, RFIs, DCNs, photographs, etc.): Photo log and Safety Documentation

NOTE: Write all entries legibly in ink. Line out all unused portions or designate as "not applicable". Preparer signs first and last name on each completed daily report. This form may be filled out electronically and signed electronically.

PREPARER'S SIGNATURE

26OCT16

DATE

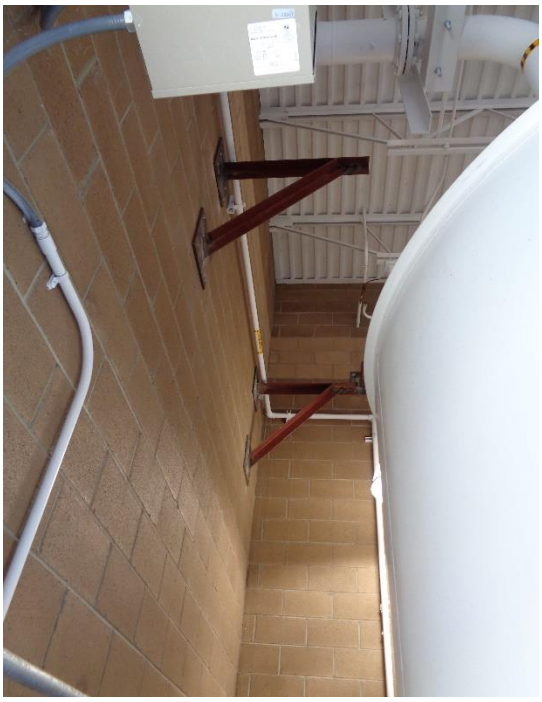

Location: South Wall
Description: Newly Installed Pipe Hangers
Date: 26 October 2016 Direction: West

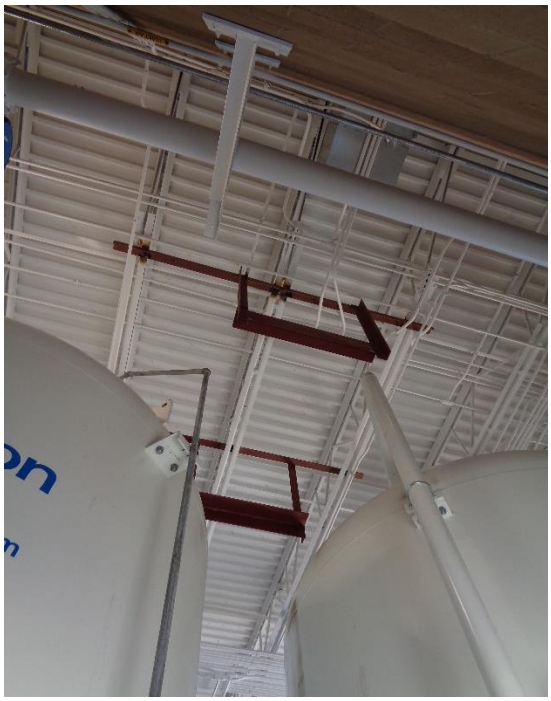

Location: Above Newly Installed GAC Vessels
Description: Newly Installed Pipe Hangers
Date: 26 October 2016 Direction: Up

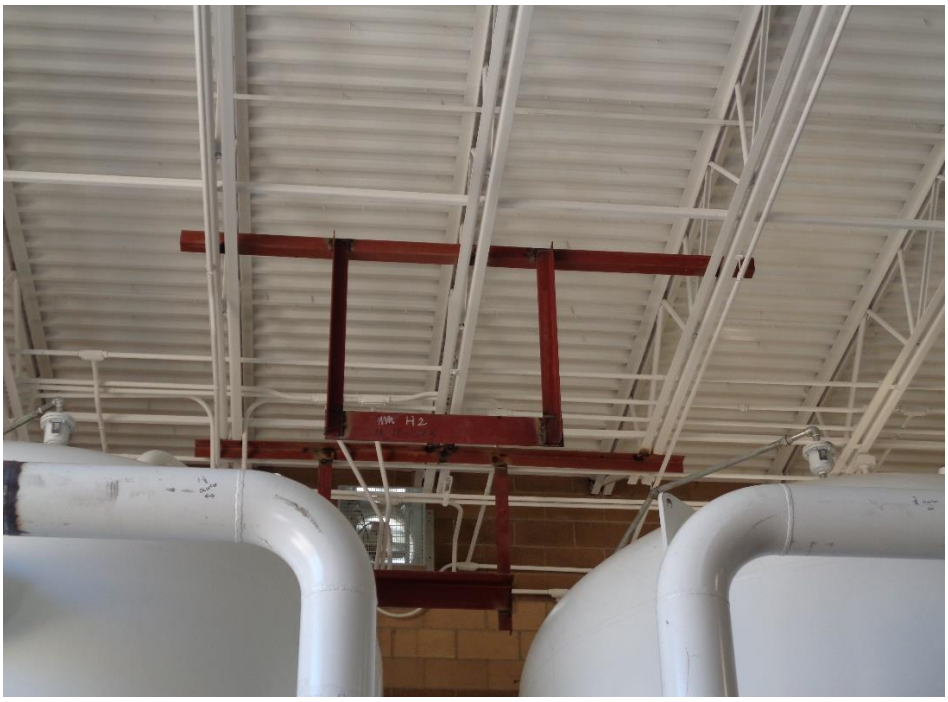

Location: Above Newly Installed GAC Vessels
Description: Newly Installed Pipe Hangers
Date: 26 October 2016 Direction: South

Location: Above Newly Installed Effluent Skid Pump
Description: Newly Installed Pipe Hanger
Date: 26 October 2016 Direction: West

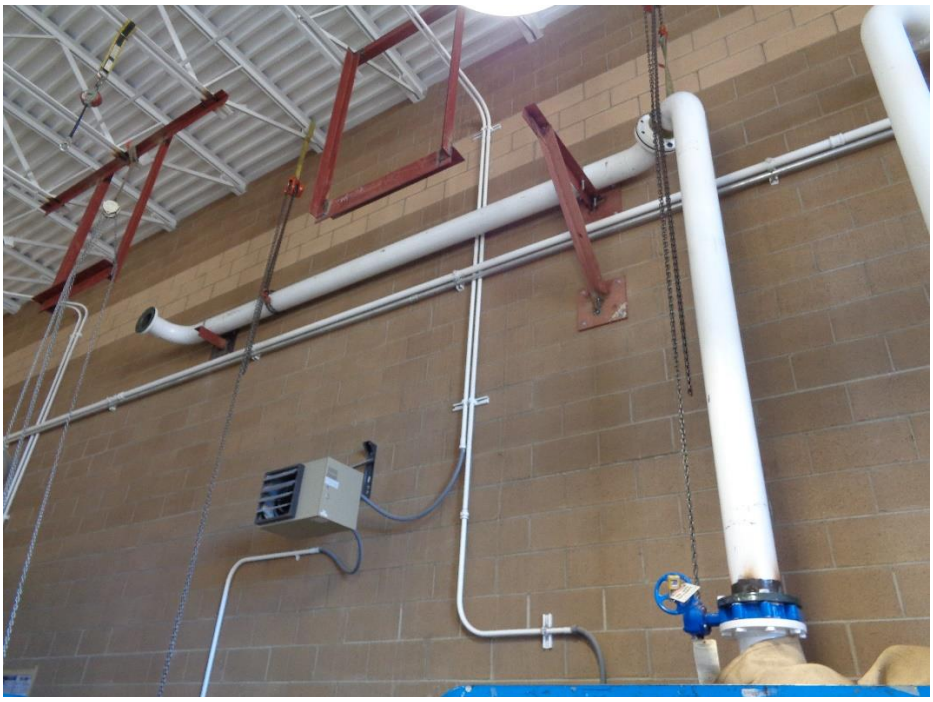

Location: Overhead of Newly Installed Influent Tank
Description: Newly Installed Pipe
Date: 26 October 2016 Direction: Northwest

Location: North Wall
Description: Newly Installed Hose Hanger
Date: 26 October 2016 Direction: North

EA Engineering, Science, and Technology, Inc.

DAILY SAFETY INSPECTION CHECKLIST (TO BE COMPLETED EACH DAY OF CONSTRUCTION OR HTRW SITE ACTIVITIES)

Site: BULK FUELS FACILITY EXPANSION
Location: KAFB BLDG 19150
Project No.: 62599 DM01
Client: U.S. ARMY CORP OF ENGINEERS

Prepared by SSHO: JOHN CODE BACA
Project Manager: DEVON JERCINOVIC
Date: 10/26/16

Rating	Y	N	N/A	Comments/Immediate Corrective Action[1]
Accident Prevention Plan (APP) and Site Safety and Health Plan (SSHP) General Requirements				
Are there new onsite personnel? • Did they receive pre-entry briefing and are their names recorded in field logbook or daily log? • Was the USACE PM made aware of the new personnel. • Required training and medical surveillance documentation received (e.g., 40-hr, 8 hr, etc.)?	X X X	 X 	 	
Did personnel sign in/out of site?	X			
Daily tailgate safety meetings conducted and documented?	X			
Were new activities performed today? Were hazards identified, discussed during the daily safety tailgate, and incorporated into revised APP/SSHP?		X		
New materials brought on site? MSDSs available?		X		
Exclusion (EZ), Contamination Reduction (CRZ), and Support Zones (SZ) delineated and enforced?			X	
General housekeeping measures in place to prevent hazards?	X			
Emergency Planning				
Were there any changes to emergency contact names, telephone numbers, or hospital? If so, were site personnel made aware and was information distributed/reposted.		X		
Adequate safety equipment inventory available?	X			
Fire extinguisher available (monthly inspection of extinguisher will suffice)	X			
Eyewash station(s) functioning and in place (weekly inspection of eye wash station will suffice)?	X			
First aid supplies available (weekly inspection of first aid kit will suffice)?	X			
Communication equipment readily available for emergencies?	X			
Any reported accidents/incidents at this site? If so, were accident reporting procedures followed?			X	
Air Monitoring				
Monitoring equipment specified in SSHP available and in working order? Air monitoring instrumentation for this site includes – check each if required/on site, note deficiencies in comments: • Combustible gas meter • Organic vapor analyzer • Contaminant specific analyzer for benzene (if total organic vapor concentrations exceed 0.5 ppm)			X	
Monitoring equipment calibrated and calibration records			X	

Y = Satisfactory or Yes; N = Unsatisfactory or No, N/A = Not applicable

Rating	Y	N	N/A	Comments/Immediate Corrective Action[1]
available?			X	
Environmental and personnel monitoring performed as specified in SSHP?			X	
PPE				
Proper dermal protection worn by EA and subcontracted employees when handling/ contacting hazardous chemicals or contaminated environmental media?			X	
Required PPE (hard hats, safety boots / shoes, eye protection with side shields, hearing protection) being worn by EA and subcontracted employees?	X			
PPE inspection completed by SSHO?	X			
Drill Rig Operations				
Daily rig inspection completed? Any equipment problems?			X	
Drill rigs/elevated equipment maintaining minimum 10-ft distance from energized (50 kV) overhead power lines?			X	
Investigation-derived Waste (IDW)				
Wastes properly staged, secured, and labeled at end of day?			X	

Additional Comments:

John M. DeBaca

Site Safety and Health Officer's Signature

10/26/16

Date

[1]If a deficiency is noted that cannot be immediately corrected, the SSHO will monitor the progress in correcting the deficiency and will document following:

- Date the deficiency was identified
- Description of the deficiency
- Name of the person responsible for correcting the deficiency
- Projected date of correction
- Actual date of correction.

EA ENGINEERING, SCIENCE AND TECHNOLOGY, INC.
SAFETY MEETING REPORT

Date: 10/26/16	**Time:** 0700	**Duration of meeting:** 10 min	**Project #** 62599OM01
Location: KAPB BLDG 19150		**Task:** PIPE RACK 1 & PIPE INSTALLATION	

Type of meeting: X **Daily** ____ **Weekly** ____ **Monthly** ____ **Other:** _____

Items/Issues discussed:

1. SCOPE OF WORK
2. USE OF GLOVES
3. ADDITIONAL EYEWASH LOCATION
4. TIE OFF IN LIFTS
5. LIFT 1 & PPE INSPECTION
6. FIRE BLANKET USE

Attach minutes of safety meeting if taken.

Safety questions/issues raised:	Actions/Follow-up needed:
1. NONE	
2.	
3.	
4.	
5.	
6.	

Remarks:

Meeting conducted by:
JOHN CODE BACA

HEALTH AND SAFETY ACTIVITY REPORT

Site: BULK FUELS FACILITY EXPANSION Location: KAFB BLDG 19150

Weather Cond.: CLEAR Onsite Hours: From 0645 To 1430

Changes in PPE Levels[1]	Work Operations	Reasons for Change
No changes		

Site Safety and Health Plan Violations	Corrective Action Specified	Corrective Action Taken [2](yes/no)
No safety violations!		

Observations and Comments:

Completed by: JOHN CODE BACA Date: 10/26/16
Site Health and Safety Supervisor

[1]Only SSHO may change PPE levels, using only criteria specified in APP/SSHP.
[2]If a deficiency is noted that cannot be immediately corrected, the SSHO will monitor the progress in correcting the deficiency and will document following:

- Date the deficiency was identified
- Description of the deficiency
- Name of the person responsible for correcting the deficiency
- Projected date of correction
- Actual date of correction.

DAILY REPORT

(ATTACH ADDITIONAL SHEETS IF NECESSARY)

CONTRACT NAME:	Kirtland AFB Bulk Fuels Facility Expansion of Dissolved Plume GWTS Design	REPORT NO:	016
CONTRACT NUMBER:	W912DR-12-D-0006	REPORT DATE:	27 OCT 16
REVISION NUMBER:	-	REVISION DATE:	-
TASK ORDER NUMBER:	DM01	PROJECT NAME / LOCATION:	KAFB ABQ, NM
PROJECT NUMBER:	62599DM01	PROJECT DESCRIPTION:	KAFB GWTS EXPANSION
PROJECT MANAGER:	Devon Jercinovic	FIELD QUALITY MANAGER:	Alex Spille
CONSTRUCTION MANAGER:	Luke Rich	SITE SAFETY MANAGER:	John Ede Baca

AM WEATHER:	cool, breezy, partly cloudy	PM WEATHER:	warm, breezy partly Cloudy	MAX TEMP (F):	78°		

SUMMARY OF WORK PERFORMED TODAY

Pipe installation, Painting (primer applied to welds on pipe hangers)

HEALTH AND SAFETY REPORT

SAFETY ACTIONS TAKEN TODAY/SAFETY INSPECTIONS CONDUCTED (Include Observations, Safety Violations, Corrective Instructions Given, Corrective Actions Taken, and Results of Safety Inspections Conducted:

Safe work practices observed

TAILGATE TOPICS:

welding safety, lift safety, slips/trips/falls, etc.

SAFE BEHAVIOR OBSERVATIONS/SELF-ASSESSMENTS:

Safe behavior observed

OPERATIONS / PRODUCTION REPORT

WORK FORCE – CONTRACTOR AND SUBCONTRACTOR

Company	Cumulative Total of Work Hours From Previous Report	Total Hours Today	Total Work Hours From Start of Injection Event
Rupert	165	13	178
Techsas	46	8	54
Ultra Painting	0	13	13
Mick Rich	72	8	80

EQUIPMENT ON HAND

Description of Equipment	Make/Model/Manufacturer	Equipment ID Number	Inspection Performed By
Manlift #1	Genie GS-1930		Andres Poras
Manlift #2	Genie GS-1930		Andres Poras
Articulated lift	~~Gen~~ JLG 400S	148370	Mike McIlrath
~~Foot~~			

COMMENTS (acceptance status, inspection findings, etc.):

OK

WORK AND/OR TESTS ACCOMPLISHED OR IN PROGRESS

Performed Work / Test for Today: pipe install, painting

Planned Work / Test for Tomorrow:

Painting + Pipe Installation

Planned Work / Test for Next Week:

Pipe Installation

CHANGED CONDITIONS/DELAY/CONFLICTS ENCOUNTERED (List any conflicts with the project [i.e., scope of work and/or drawings], delays to the project attributable to site and weather conditions, etc. SPEEDHIDE WB Alkyd 6-1510 used instead of Devguard 4306 Alkyd

VISITORS AND DISCUSSIONS:

Trent Simpler + Diane Agnew

QUALITY CONTROL REPORT

MATERIALS DELIVERED TO JOB SITE

Quantity/Volume/ Weight	Description of Materials Received	Make/Model/Manufacturer	Material Lot Number	Inspection Performed By
2 Gal	Paint ~~+ Primer~~	PPG Speedhide	6-1510	ASplh
1 Gal	Primer	Devguard Primer	4160-1000	

COMMENTS (acceptance status, inspection findings, etc.):

INSPECTIONS PERFORMED

Task/Activity Inspected	Inspection Performed	Findings
Pipes	Visual inspection	OK

TESTS PERFORMED

Task/Activity Tested	Test Performed	Test Results (Pass/Fail) - Criteria
Non		

QUALITY ISSUES AND RESOLUTIONS:

SUBMITTALS INSPECTION / REVIEW

Submittal No.	Submittal Description	Specification/Plan Reference	Submittal Approved?		Comment/Reason/Action
NA	Daily Report	-	Yes ☐	No ☐	Pending
NA	SBO	-	Yes ☐	No ☐	Pending
NA	PTSP	-	Yes ☐	No ☐	Pending

REGULATORY COMPLIANCE REPORT

PERMIT INSPECTIONS PERFORMED: Non

WASTE ACCUMULATION/STOCKPILE AREA INSPECTION

Inspection Performed By:		Signature of Inspector:	
Accumulation / Stockpile Area Inspected:	Non		

No of Bins:		No of Tankers		No of Roll-Off Boxes:		No. of Tanks	

Inspection Results: Non

GENERAL COMMENTS

General Comments~ (rework, directives, etc.): None
ATTACHMENTS
List of Attachments: (examples, as applicable: submittals, meeting minutes, safety meeting minutes, COCs, weight tickets, manifests, profiles, rework item list, RFIs, DCNs, photographs, etc.): Photo log and safety documentation
NOTE: Write all entries legibly in ink. Line out all unused portions or designate as "not applicable". Preparer signs first and last name on each completed daily report. This form may be filled out electronically and signed electronically. Alex Spill (PREPARER'S SIGNATURE) 27OCT16 (DATE)

Location: Outside of GWTS Building on Driveway
Description: Newly Delivered Paint
Date: 27 October 2016 Direction: Northwest

Location: Outside of GWTS Building, North of Driveway
Description: Newly Delivered Primer
Date: 27 October 2016 Direction: Northeast

Location: Above Newly Installed Influent Tank
Description: Newly Installed Piping and Pipe Hangers with Primer Applied
Date: 27 October 2016 Direction: Northwest

Location: Above Newly Installed Influent Pump Skid
Description: Newly Installed Pipe Hanger and Pipe Hangers with Primer Applied
Date: 27 October 2016 Direction: Northeast

Location: Above Newly Installed Effluent Tank
Description: Pipe Hangers with Primer Applied
Date: 27 October 2016 Direction: Northwest

Location: West and South Wall of GWTS
Description: Pipe hangers with Primer Applied
Date: 27 October 2016 Direction: South

Location: Easternmost GAC Vessel
Description: GAC with Calgon Logo Removed
Date: 27 October 2016 Direction: South

EA Engineering, Science, and Technology, Inc.

DAILY SAFETY INSPECTION CHECKLIST (TO BE COMPLETED EACH DAY OF CONSTRUCTION OR HTRW SITE ACTIVITIES)

Site: BULK FUELS FACILITY EXPANSION
Location: KAFB BLDG 19150
Project No.: 62599DM01
Client: U.S. ARMY CORP OF ENGINEERS

Prepared by SSHO: JOHN CODEBACK
Project Manager: DEVON JERCINOVIC
Date: 10/27/16

Rating	Y	N	N/A	Comments/Immediate Corrective Action[1]
Accident Prevention Plan (APP) and Site Safety and Health Plan (SSHP) General Requirements				
Are there new onsite personnel? • Did they receive pre-entry briefing and are their names recorded in field logbook or daily log? • Was the USACE PM made aware of the new personnel. • Required training and medical surveillance documentation received (e.g., 40-hr, 8 hr, etc.)?		X	X X X	
Did personnel sign in/out of site?	X			
Daily tailgate safety meetings conducted and documented?	X			
Were new activities performed today? Were hazards identified, discussed during the daily safety tailgate, and incorporated into revised APP/SSHP?	X			Painting operations - Review of MSDS & coordination of welding/painting operations
New materials brought on site? MSDSs available?	X			Paints
Exclusion (EZ), Contamination Reduction (CRZ), and Support Zones (SZ) delineated and enforced?			X	
General housekeeping measures in place to prevent hazards?	X			
Emergency Planning				
Were there any changes to emergency contact names, telephone numbers, or hospital? If so, were site personnel made aware and was information distributed/reposted.		X		
Adequate safety equipment inventory available?	X			
Fire extinguisher available (monthly inspection of extinguisher will suffice)	X			
Eyewash station(s) functioning and in place (weekly inspection of eye wash station will suffice)?	X			
First aid supplies available (weekly inspection of first aid kit will suffice)?	X			
Communication equipment readily available for emergencies?	X			
Any reported accidents/incidents at this site? If so, were accident reporting procedures followed?			X	
Air Monitoring				
Monitoring equipment specified in SSHP available and in working order? Air monitoring instrumentation for this site includes – check each if required/on site, note deficiencies in comments: • Combustible gas meter • Organic vapor analyzer • Contaminant specific analyzer for benzene (if total organic vapor concentrations exceed 0.5 ppm)			X	
Monitoring equipment calibrated and calibration records			X	

Y = Satisfactory or Yes; N = Unsatisfactory or No, N/A = Not applicable

Rating	Y	N	N/A	Comments/Immediate Corrective Action[1]
available?			X	
Environmental and personnel monitoring performed as specified in SSHP?			X	
PPE				
Proper dermal protection worn by EA and subcontracted employees when handling/ contacting hazardous chemicals or contaminated environmental media?			X	
Required PPE (hard hats, safety boots / shoes, eye protection with side shields, hearing protection) being worn by EA and subcontracted employees?	X			
PPE inspection completed by SSHO?	X			
Drill Rig Operations				
Daily rig inspection completed? Any equipment problems?			X	
Drill rigs/elevated equipment maintaining minimum 10-ft distance from energized (50 kV) overhead power lines?			X	
Investigation-derived Waste (IDW)				
Wastes properly staged, secured, and labeled at end of day?			X	

Additional Comments:
Stopped paint work to assist painter understand the tie-off policy for work above 6' from a ladder. Worker complied immediately

John M. Cd. Baca
Site Safety and Health Officer's Signature

10/27/16
Date

[1]If a deficiency is noted that cannot be immediately corrected, the SSHO will monitor the progress in correcting the deficiency and will document following:

- Date the deficiency was identified
- Description of the deficiency
- Name of the person responsible for correcting the deficiency
- Projected date of correction
- Actual date of correction.

Y = Satisfactory or Yes; N = Unsatisfactory or No, N/A = Not applicable

EA ENGINEERING, SCIENCE AND TECHNOLOGY, INC.
SAFETY MEETING REPORT

Date: 10/27/16	**Time:** 0700	**Duration of meeting:** 10 mm	**Project #** 62599.0101
Location: KAFB BLDG 19150		**Task:** PAINTING / PIPE INSTALLATION	

Type of meeting: X Daily ___ Weekly ___ Monthly ___ Other: _____

Items/Issues discussed:

1. SCOPE OF WORK
2. USE OF GLOVES (PAINTERS
3. EYE WASH / FIRST AID KIT LOCATION
4. INSPECTION OF LIFTS
5. AHA REVIEW RECORD
6. DRINKING WATER
7. PPE
8. WELDING / PAINTING COORDINATION
9. MSDS
10. NOISE LEVEL IN BUILDING

Attach minutes of safety meeting if taken.

Safety questions/issues raised:	Actions/Follow-up needed:
1. NOISE LEVEL OF B/U ALARM on Boom LIFT	MEASURED LEVEL & WAS WITHIN OSHA REQUIREMENTS
3. Painting and welding operations	Coordinated effort to ensure both operation didn't conflict.
5.	
6.	

Remarks:

Meeting conducted by:

JOHN CDE BACA

HEALTH AND SAFETY ACTIVITY REPORT

Site: BULK FUELS FACILITY EXPANSION Location: KAB BLDG 19150

Weather Cond.: CLEAR Onsite Hours: From 0700 To ~~1530~~ 1500

Changes in PPE Levels[1]	Work Operations	Reasons for Change
No Changes		

Site Safety and Health Plan Violations	Corrective Action Specified	Corrective Action Taken [2] (yes/no)
Worker attempted to work above 6' on a ladder w/o harness	Tie-off point identified worker donned harness & Completed work	YES!

Observations and Comments:
Worker was grateful to comply

Completed by: JOHN COE BACA Date: 10/27/16
Site Health and Safety Supervisor

[1]Only SSHO may change PPE levels, using only criteria specified in APP/SSHP.
[2]If a deficiency is noted that cannot be immediately corrected, the SSHO will monitor the progress in correcting the deficiency and will document following:

- Date the deficiency was identified
- Description of the deficiency
- Name of the person responsible for correcting the deficiency
- Projected date of correction
- Actual date of correction.

DAILY REPORT

(ATTACH ADDITIONAL SHEETS IF NECESSARY)

CONTRACT NAME:	Kirtland AFB Bulk Fuels Facility Expansion of Dissolved Plume GWTS Design	REPORT NO:	017
CONTRACT NUMBER:	W912DR-12-D-0006	REPORT DATE:	28OCT16
REVISION NUMBER:	-	REVISION DATE:	-
TASK ORDER NUMBER:	DM01	PROJECT NAME / LOCATION:	KAFB ABQ NM
PROJECT NUMBER:	62599DM01	PROJECT DESCRIPTION:	KAFB GWTS EXPANSION
PROJECT MANAGER:	Devon Jercinovic	FIELD QUALITY MANAGER:	Alex Spalk
CONSTRUCTION MANAGER:		SITE SAFETY MANAGER:	John Cde Baca

AM WEATHER:	Cool, ~~partly~~ Breezy mostly cloudy	PM WEATHER:	Cool, light wind mostly cloudy	MAX TEMP (F):	77

SUMMARY OF WORK PERFORMED TODAY

Pipe installation and painting of pipe hangers

HEALTH AND SAFETY REPORT

SAFETY ACTIONS TAKEN TODAY/SAFETY INSPECTIONS CONDUCTED (Include Observations, Safety Violations, Corrective Instructions Given, Corrective Actions Taken, and Results of Safety Inspections Conducted:

Safe work practices observed

TAILGATE TOPICS:

Lift safety, welding safety, etc.

SAFE BEHAVIOR OBSERVATIONS/SELF-ASSESSMENTS: Safe behavior observed

OPERATIONS / PRODUCTION REPORT

WORK FORCE – CONTRACTOR AND SUBCONTRACTOR

Company	Cumulative Total of Work Hours From Previous Report	Total Hours Today	Total Work Hours From Start of Injection Event
Mick Rich	80	8	88
Rupert	178 ~~54~~ Km	5 ~~5~~ Km	~~59~~ Km 183
Techsol	54 ~~178~~ Km	8 ~~5~~ Km	62

EQUIPMENT ON HAND

Description of Equipment	Make/Model/Manufacturer	Equipment ID Number	Inspection Performed By
Manlift #1	Genie GS-1930		Andres Poras
Manlift #2	Genie GS-1930		Andres Poras
Articulated Lift	JLG 400s	148370	Andres Poras
DC Welder	Miller PipePro 304	LH013526	John Cde Baca

COMMENTS (acceptance status, inspection findings, etc.):

O.K.

WORK AND/OR TESTS ACCOMPLISHED OR IN PROGRESS

Performed Work / Test for Today: Pipe installation and painting

Planned Work / Test for Tomorrow: None

Planned Work / Test for Next Week: Pipe installation

CHANGED CONDITIONS/DELAY/CONFLICTS ENCOUNTERED (List any conflicts with the project [i.e., scope of work and/or drawings], delays to the project attributable to site and weather conditions, etc. None

VISITORS AND DISCUSSIONS: None

QUALITY CONTROL REPORT

MATERIALS DELIVERED TO JOB SITE

Quantity/Volume/ Weight	Description of Materials Received	Make/Model/Manufacturer	Material Lot Number	Inspection Performed By
None				

COMMENTS (acceptance status, inspection findings, etc.): None

INSPECTIONS PERFORMED

Task/Activity Inspected	Inspection Performed	Findings
Pipe installation	Visual Inspection	OK

TESTS PERFORMED

Task/Activity Tested	Test Performed	Test Results (Pass/Fail) - Criteria
None		

QUALITY ISSUES AND RESOLUTIONS: None

SUBMITTALS INSPECTION / REVIEW

Submittal No.	Submittal Description	Specification/Plan Reference	Submittal Approved?		Comment/Reason/Action
NA	Daily Report	–	Yes ☐	No ☐	Pending
NA	SBO	–	Yes ☐	No ☐	Pending
NA	PTSP	–	Yes ☐	No ☐	Pending

REGULATORY COMPLIANCE REPORT

PERMIT INSPECTIONS PERFORMED: None

WASTE ACCUMULATION/STOCKPILE AREA INSPECTION

Inspection Performed By:		Signature of Inspector:	
Accumulation / Stockpile Area Inspected:	None		

No of Bins:		No of Tankers		No of Roll-Off Boxes:		No. of Tanks	

Inspection Results: None

GENERAL COMMENTS

General Comments~ (rework, directives, etc.):	None

ATTACHMENTS

List of Attachments: (examples, as applicable: submittals, meeting minutes, safety meeting minutes, COCs, weight tickets, manifests, profiles, rework item list, RFIs, DCNs, photographs, etc.): Photo log and safety documentation

NOTE: Write all entries legibly in ink. Line out all unused portions or designate as "not applicable". Preparer signs first and last name on each completed daily report. This form may be filled out electronically and signed electronically.

PREPARER'S SIGNATURE	DATE
	28 OCT 16

Location: North Wall Above Influent Pump Skids
Description: Newly Installed Piping
Date: 28 October 2016 Direction: North

Location: Above Newly Installed Pump Skid
Description: Newly Painted Pipe Hangers
Date: 28 October 2016 Direction: North

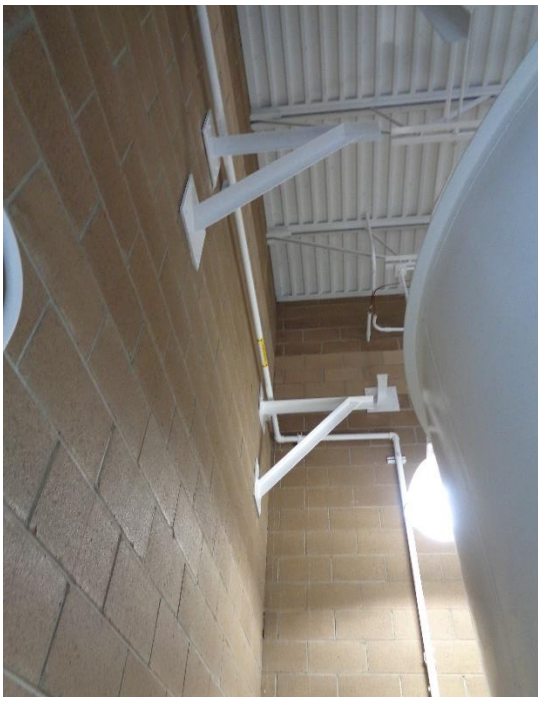

Location: South Wall Above Existing Effluent Tank
Description: Newly Painted Pipe Hangers
Date: 28 October 2016 Direction: West

Location: Above Newly Installed Influent Tank
Description: Newly Painted Pipe Hangers
Date: 28 October 2016 Direction: Northeast

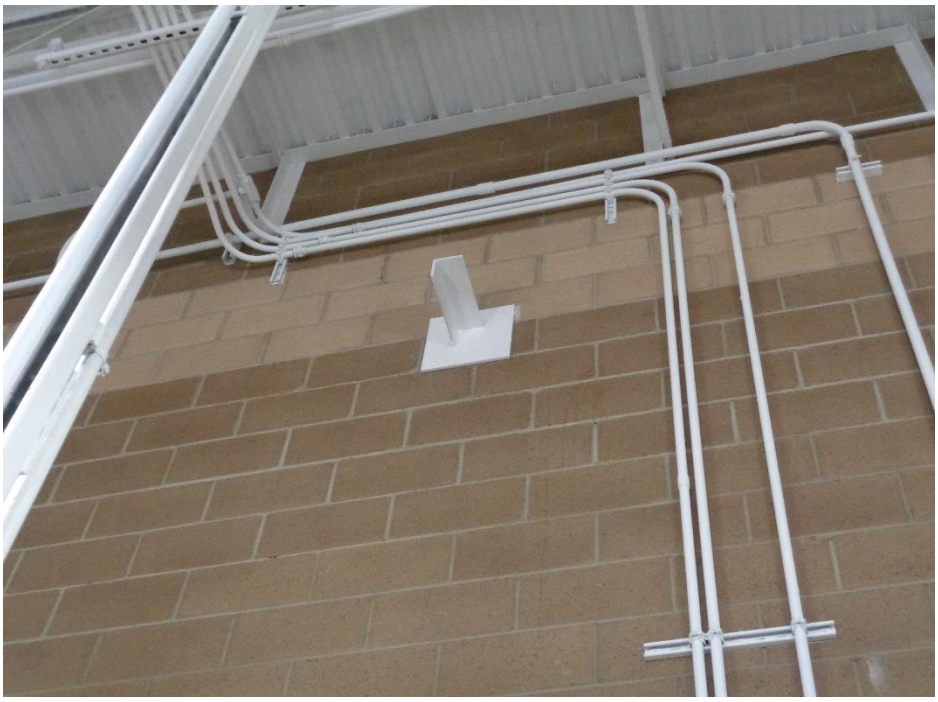

Location: West Wall Above Effluent Pump Skids
Description: Painted Pipe Hanger
Date: 28 October 2016 Direction: West

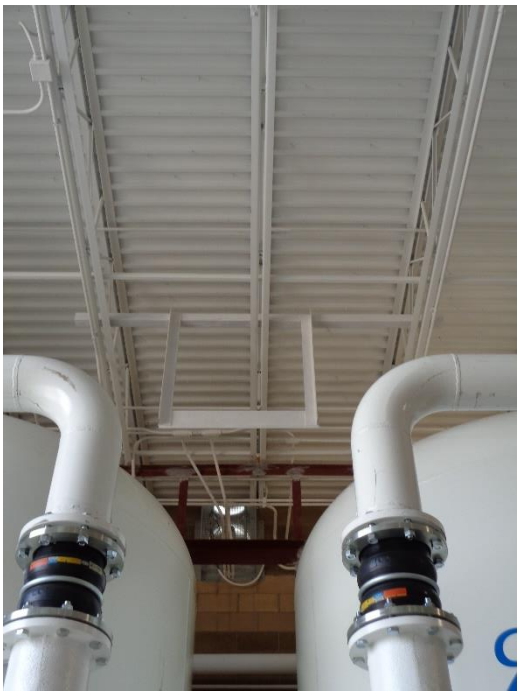

Location: Above Newly Installed GAC Vessels
Description: Newly Painted Pipe Hanger
Date: 28 October 2016 Direction: South

Location: Above Newly Installed GAC Vessels
Description: Newly Painted Pipe Hanger
Date: 28 October 2016 Direction: Up

Location: Above Newly Installed Effluent Pump Skid
Description: Newly Painted Pipe Hanger
Date: 28 October 2016 Direction: West

Location: North Wall
Description: Newly Painted Pipe Hanger
Date: 28 October 2016 Direction: North

EA Engineering, Science, and Technology, Inc.

DAILY SAFETY INSPECTION CHECKLIST (TO BE COMPLETED EACH DAY OF CONSTRUCTION OR HTRW SITE ACTIVITIES)

Site: BULK FUELS FACILITY EXPANSION
Location: KAFB BLDG 19150
Project No.: 62599OM01
Client: U.S. ARMY CORP OF ENGINEERS

Prepared by SSHO: JOHN CODE BACA
Project Manager: DEVON JERCINOVIC
Date: 10/28/16

Rating	Y	N	N/A	Comments/Immediate Corrective Action[1]
Accident Prevention Plan (APP) and Site Safety and Health Plan (SSHP) General Requirements				
Are there new onsite personnel? • Did they receive pre-entry briefing and are their names recorded in field logbook or daily log? • Was the USACE PM made aware of the new personnel. • Required training and medical surveillance documentation received (e.g., 40-hr, 8 hr, etc.)?		X	X X X	
Did personnel sign in/out of site?	X			
Daily tailgate safety meetings conducted and documented?	X			
Were new activities performed today? Were hazards identified, discussed during the daily safety tailgate, and incorporated into revised APP/SSHP?		X		
New materials brought on site? MSDSs available?		X		
Exclusion (EZ), Contamination Reduction (CRZ), and Support Zones (SZ) delineated and enforced?			X	
General housekeeping measures in place to prevent hazards?	X			
Emergency Planning				
Were there any changes to emergency contact names, telephone numbers, or hospital? If so, were site personnel made aware and was information distributed/reposted.		X		
Adequate safety equipment inventory available?	X			
Fire extinguisher available (monthly inspection of extinguisher will suffice)	X			
Eyewash station(s) functioning and in place (weekly inspection of eye wash station will suffice)?	X			
First aid supplies available (weekly inspection of first aid kit will suffice)?	X			
Communication equipment readily available for emergencies?	X			
Any reported accidents/incidents at this site? If so, were accident reporting procedures followed?			X	
Air Monitoring				
Monitoring equipment specified in SSHP available and in working order? Air monitoring instrumentation for this site includes – check each if required/on site, note deficiencies in comments: • Combustible gas meter • Organic vapor analyzer • Contaminant specific analyzer for benzene (if total organic vapor concentrations exceed 0.5 ppm)			X	
Monitoring equipment calibrated and calibration records			X	

Y = Satisfactory or Yes; N = Unsatisfactory or No, N/A = Not applicable

Rating	Y	N	N/A	Comments/Immediate Corrective Action[1]
available?			X	
Environmental and personnel monitoring performed as specified in SSHP?			X	
PPE				
Proper dermal protection worn by EA and subcontracted employees when handling/ contacting hazardous chemicals or contaminated environmental media?			X	
Required PPE (hard hats, safety boots / shoes, eye protection with side shields, hearing protection) being worn by EA and subcontracted employees?	X			
PPE inspection completed by SSHO?	X			
Drill Rig Operations				
Daily rig inspection completed? Any equipment problems?			X	
Drill rigs/elevated equipment maintaining minimum 10-ft distance from energized (50 kV) overhead power lines?			X	
Investigation-derived Waste (IDW)				
Wastes properly staged, secured, and labeled at end of day?			X	

Additional Comments:

John M. Cole Baca

Site Safety and Health Officer's Signature

10/28/16

Date

[1]If a deficiency is noted that cannot be immediately corrected, the SSHO will monitor the progress in correcting the deficiency and will document following:

- Date the deficiency was identified
- Description of the deficiency
- Name of the person responsible for correcting the deficiency
- Projected date of correction
- Actual date of correction.

EA ENGINEERING, SCIENCE AND TECHNOLOGY, INC.
SAFETY MEETING REPORT

Date: 10/28/16	Time: 0700	Duration of meeting: 10 min	Project # 625990M01
Location: KAFB BLDG 1950		Task: PAINTING & PIPE INSTALL	

Type of meeting: X Daily ___ Weekly ___ Monthly ___ Other: _____

Items/Issues discussed:

1. SCOPE OF WORK
2. USE OF GLOVES FOR PAINTING
3. USE OF FALL PROTECTION FROM LADDER
4. LIFT INSPECTION
5.

Attach minutes of safety meeting if taken.

Safety questions/issues raised:	Actions/Follow-up needed:
1. NONE	
2.	
3.	
4.	
5.	
6.	

Remarks:

Meeting conducted by:

JOHN COE BACA

HEALTH AND SAFETY ACTIVITY REPORT

Site: BULK FUELS FACILITY EXPANSION Location: KAFB BLDG 19150

Weather Cond.: PARTLY CLOUDY Onsite Hours: From 0700 To 1500

Changes in PPE Levels[1]	Work Operations	Reasons for Change
NO CHANGES!		

Site Safety and Health Plan Violations	Corrective Action Specified	Corrective Action Taken [2](yes/no)
NO VIOLATIONS!		

Observations and Comments:
NONE

Completed by: JOHN CODE BACA Date: 10/28/16
Site Health and Safety Supervisor

[1]Only SSHO may change PPE levels, using only criteria specified in APP/SSHP.
[2]If a deficiency is noted that cannot be immediately corrected, the SSHO will monitor the progress in correcting the deficiency and will document following:

- Date the deficiency was identified
- Description of the deficiency
- Name of the person responsible for correcting the deficiency
- Projected date of correction
- Actual date of correction.

DAILY REPORT

(ATTACH ADDITIONAL SHEETS IF NECESSARY)

CONTRACT NAME:	Kirtland AFB Bulk Fuels Facility Expansion of Dissolved Plume GWTS Design	REPORT NO:	018
CONTRACT NUMBER:	W912DR-12-D-0006	REPORT DATE:	31OCT16
REVISION NUMBER:	-	REVISION DATE:	-
TASK ORDER NUMBER:	DM01	PROJECT NAME / LOCATION:	KAFB GWTS EXPANSION
PROJECT NUMBER:	62599DM01	PROJECT DESCRIPTION:	KAFB, ABQ, NM
PROJECT MANAGER:	Devon Jercinovic	FIELD QUALITY MANAGER:	Alex Spilk
CONSTRUCTION MANAGER:	Matt Bowman	SITE SAFETY MANAGER:	John CdeBaca

AM WEATHER:	Mostly Cloudy Cool, breezy	PM WEATHER:	Mostly Cloudy Cool, Breezy	MAX TEMP (F):	78°		

SUMMARY OF WORK PERFORMED TODAY

Hanger adjustment + pipe fitting and installation

HEALTH AND SAFETY REPORT

SAFETY ACTIONS TAKEN TODAY/SAFETY INSPECTIONS CONDUCTED (Include Observations, Safety Violations, Corrective Instructions Given, Corrective Actions Taken, and Results of Safety Inspections Conducted: None, Visual inspection performed

TAILGATE TOPICS: Boom lift Safety, hearing protection, eye wash, + ladder safety

SAFE BEHAVIOR OBSERVATIONS/SELF-ASSESSMENTS: Safe behavior observe

OPERATIONS / PRODUCTION REPORT

WORK FORCE – CONTRACTOR AND SUBCONTRACTOR

Company	Cumulative Total of Work Hours From Previous Report	Total Hours Today	Total Work Hours From Start of Injection Event
Mick Rich	88	8	96
Rupert	183	21	204
Techsos	62	7	69

EQUIPMENT ON HAND

Description of Equipment	Make/Model/Manufacturer	Equipment ID Number	Inspection Performed By
Manlift #1	Genie GS-1930		Andres Poras
Manlift #2	Genie GS-1930		Andres Poras
Articulated Man lift	JLG-400S	148370	Andres Poras
DC Welder	Miller Pipe Pro 304	LH013526	John CdeBaca

COMMENTS (acceptance status, inspection findings, etc.):

OK

WORK AND/OR TESTS ACCOMPLISHED OR IN PROGRESS

Performed Work / Test for Today: pipe fitting + installation, Hanger adjustment

Planned Work / Test for Tomorrow:

Pipe installation

Planned Work / Test for Next Week:

Pipe installation

CHANGED CONDITIONS/DELAY/CONFLICTS ENCOUNTERED (List any conflicts with the project [i.e., scope of work and/or drawings], delays to the project attributable to site and weather conditions, etc.

VISITORS AND DISCUSSIONS: Amy Sanchez

QUALITY CONTROL REPORT

MATERIALS DELIVERED TO JOB SITE

Quantity/Volume/ Weight	Description of Materials Received	Make/Model/Manufacturer	Material Lot Number	Inspection Performed By
3	Pipes			Alex Spink

COMMENTS (acceptance status, inspection findings, etc.): OK

INSPECTIONS PERFORMED

Task/Activity Inspected	Inspection Performed	Findings
Pipe installation	Visual inspection	OK

TESTS PERFORMED

Task/Activity Tested	Test Performed	Test Results (Pass/Fail) - Criteria
None		

QUALITY ISSUES AND RESOLUTIONS: None

SUBMITTALS INSPECTION / REVIEW

Submittal No.	Submittal Description	Specification/Plan Reference	Submittal Approved?		Comment/Reason/Action
NA	Daily Report	-	Yes ☐	No ☐	Pending
NA	SBO	-	Yes ☐	No ☐	Pending
NA	PTSP	-	Yes ☐	No ☐	Pending

REGULATORY COMPLIANCE REPORT

PERMIT INSPECTIONS PERFORMED: None

WASTE ACCUMULATION/STOCKPILE AREA INSPECTION

Inspection Performed By:				Signature of Inspector:			
Accumulation / Stockpile Area Inspected:	None						
No of Bins:		No of Tankers		No of Roll-Off Boxes:		No. of Tanks	

Inspection Results: None

GENERAL COMMENTS

General Comments~ (rework, directives, etc.):

None

ATTACHMENTS

List of Attachments: (examples, as applicable: submittals, meeting minutes, safety meeting minutes, COCs, weight tickets, manifests, profiles, rework item list, RFIs, DCNs, photographs, etc.):

Photolog and Safety documentation

NOTE: Write all entries legibly in ink. Line out all unused portions or designate as "not applicable". Preparer signs first and last name on each completed daily report. This form may be filled out electronically and signed electronically.

Alex Spill

PREPARER'S SIGNATURE

DATE

Location: South of GWTS in Laydown Area
Description: Newly Delivered Piping
Date: 31 October 2016 Direction: Southwest

Location: Southwest Corner of GWTS
Description: Newly Installed Pipe and Modified Pipe Hanger
Date: 31 October 2016 Direction: Up

Location: Southwest Corner of GWTS
Description: Newly Installed Pipe
Date: 31 October 2016 Direction: Up

Location: Above Newly Installed Influent Pump Skid
Description: Newly Installed Pipe
Date: 31 October 2016 Direction: Up

Location: Newly Installed GAC Vessels
Description: Vessels with Calgon Logos Removed
Date: 31 October 2016 Direction: West

EA Engineering, Science, and Technology, Inc.

DAILY SAFETY INSPECTION CHECKLIST (TO BE COMPLETED EACH DAY OF CONSTRUCTION OR HTRW SITE ACTIVITIES)

Site: BULK FUELS FACILITY EXPANSION
Location: KAFB BLDG 19150
Project No.: 62599 DM01
Client: U.S. ARMY CORP OF ENGINEERS

Prepared by SSHO: JOHN CLOE BACA
Project Manager: DEVON JERCINOVIC
Date: 10/31/16

Rating	Y	N	N/A	Comments/Immediate Corrective Action[1]
Accident Prevention Plan (APP) and Site Safety and Health Plan (SSHP) General Requirements				
Are there new onsite personnel? • Did they receive pre-entry briefing and are their names recorded in field logbook or daily log? • Was the USACE PM made aware of the new personnel. • Required training and medical surveillance documentation received (e.g., 40-hr, 8 hr, etc.)?		X	X X X	
Did personnel sign in/out of site?	X			
Daily tailgate safety meetings conducted and documented?	X			
Were new activities performed today? Were hazards identified, discussed during the daily safety tailgate, and incorporated into revised APP/SSHP?		X		
New materials brought on site? MSDSs available?		X		
Exclusion (EZ), Contamination Reduction (CRZ), and Support Zones (SZ) delineated and enforced?			X	
General housekeeping measures in place to prevent hazards?	X			
Emergency Planning				
Were there any changes to emergency contact names, telephone numbers, or hospital? If so, were site personnel made aware and was information distributed/reposted.		X		
Adequate safety equipment inventory available?	X			
Fire extinguisher available (monthly inspection of extinguisher will suffice)	X			
Eyewash station(s) functioning and in place (weekly inspection of eye wash station will suffice)?	X			
First aid supplies available (weekly inspection of first aid kit will suffice)?	X			
Communication equipment readily available for emergencies?	X			
Any reported accidents/incidents at this site? If so, were accident reporting procedures followed?			X	
Air Monitoring				
Monitoring equipment specified in SSHP available and in working order? Air monitoring instrumentation for this site includes – check each if required/on site, note deficiencies in comments: • Combustible gas meter • Organic vapor analyzer • Contaminant specific analyzer for benzene (if total organic vapor concentrations exceed 0.5 ppm)			X	
Monitoring equipment calibrated and calibration records			X	

Y = Satisfactory or Yes; N = Unsatisfactory or No, N/A = Not applicable

Rating	Y	N	N/A	Comments/Immediate Corrective Action[1]
available?			X	
Environmental and personnel monitoring performed as specified in SSHP?			X	
PPE				
Proper dermal protection worn by EA and subcontracted employees when handling/ contacting hazardous chemicals or contaminated environmental media?			X	
Required PPE (hard hats, safety boots / shoes, eye protection with side shields, hearing protection) being worn by EA and subcontracted employees?	X			
PPE inspection completed by SSHO?	X			
Drill Rig Operations				
Daily rig inspection completed? Any equipment problems?			X	
Drill rigs/elevated equipment maintaining minimum 10-ft distance from energized (50 kV) overhead power lines?			X	
Investigation-derived Waste (IDW)				
Wastes properly staged, secured, and labeled at end of day?			X	

Additional Comments:

John M. Caldarone

Site Safety and Health Officer's Signature

10/31/16

Date

[1]If a deficiency is noted that cannot be immediately corrected, the SSHO will monitor the progress in correcting the deficiency and will document following:

- Date the deficiency was identified
- Description of the deficiency
- Name of the person responsible for correcting the deficiency
- Projected date of correction
- Actual date of correction.

Y = Satisfactory or Yes; N = Unsatisfactory or No, N/A = Not applicable

EA ENGINEERING, SCIENCE AND TECHNOLOGY, INC.
SAFETY MEETING REPORT

Date: 10/31/16	**Time:** 0700	**Duration of meeting:** 10min	**Project #** 62599.0101
Location: KAFB Bldg 19150		**Task:** Installing Pipe & Removing Tank Logo	

Type of meeting: X Daily ___ Weekly ___ Monthly ___ Other: _____

Items/Issues discussed:

1. Scope of Work & Noise Level on Boom Lift B.U. Alarm
2. Second Eyewash Operational
3. Tie-off in Lifts
4. Inspect Lifts
5. Fall Protection on Ladder Above 6'

Attach minutes of safety meeting if taken.

Safety questions/issues raised:	Actions/Follow-up needed:
1. None!	
2.	
3.	
4.	
5.	
6.	

Remarks:

Meeting conducted by:
Cde Baca

HEALTH AND SAFETY ACTIVITY REPORT

Site: BULK FUELS FACILITY EXPANSION Location: KAFB Bldg 19150

Weather Cond.: CLEAR Onsite Hours: From 0700 To 1430

Changes in PPE Levels[1]	Work Operations	Reasons for Change
NO CHANGES!		

Site Safety and Health Plan Violations	Corrective Action Specified	Corrective Action Taken [2](yes/no)
NO SAFETY VIOLATIONS!		

Observations and Comments:

Completed by: JOHN COE BACA
Site Health and Safety Supervisor

Date: 10/31/16

[1]Only SSHO may change PPE levels, using only criteria specified in APP/SSHP.
[2]If a deficiency is noted that cannot be immediately corrected, the SSHO will monitor the progress in correcting the deficiency and will document following:

- Date the deficiency was identified
- Description of the deficiency
- Name of the person responsible for correcting the deficiency
- Projected date of correction
- Actual date of correction.

DAILY REPORT

(ATTACH ADDITIONAL SHEETS IF NECESSARY)

CONTRACT NAME:	Kirtland AFB Bulk Fuels Facility Expansion of Dissolved Plume GWTS Design	REPORT NO:	019
CONTRACT NUMBER:	W912DR-12-D-0006	REPORT DATE:	01NOV16
REVISION NUMBER:	-	REVISION DATE:	-
TASK ORDER NUMBER:	DM01	PROJECT NAME / LOCATION:	KAFB, ABQ, NM
PROJECT NUMBER:	62599DM01	PROJECT DESCRIPTION:	KAFB GWTS EXPANSION
PROJECT MANAGER:	Devon Jercinovic	FIELD QUALITY MANAGER:	Alex Spill
CONSTRUCTION MANAGER:	Matt Bowman	SITE SAFETY MANAGER:	John CdeBaca

AM WEATHER:	Cool, Mostly Cloudy, Breezy	PM WEATHER:	Cool, Mostly Cloudy Breezy	MAX TEMP (F):	72°		

SUMMARY OF WORK PERFORMED TODAY

Pipe installation + welding

HEALTH AND SAFETY REPORT

SAFETY ACTIONS TAKEN TODAY/SAFETY INSPECTIONS CONDUCTED (Include Observations, Safety Violations, Corrective Instructions Given, Corrective Actions Taken, and Results of Safety Inspections Conducted:

Visual observations, No issues

TAILGATE TOPICS: Welding Safety, slips/trips/falls, etc

SAFE BEHAVIOR OBSERVATIONS/SELF-ASSESSMENTS:

Safe behavior observed

OPERATIONS / PRODUCTION REPORT

WORK FORCE – CONTRACTOR AND SUBCONTRACTOR

Company	Cumulative Total of Work Hours From Previous Report	Total Hours Today	Total Work Hours From Start of Injection Event
Rupert	204	21	225
Techgas	69	7	76
Mick Rich	96	6	102

EQUIPMENT ON HAND

Description of Equipment	Make/Model/Manufacturer	Equipment ID Number	Inspection Performed By
Manlift #1	Genie GS - 1930		Andres Poras
Manlift #2	Genie GS - 1930		Andres Poras
Articulated Man lift	JLG - 400S	148370	Andres Poras
DC welder	Miller PipePro 304	LH013526	Andres Poras

COMMENTS (acceptance status, inspection findings, etc.):

OK

WORK AND/OR TESTS ACCOMPLISHED OR IN PROGRESS

Performed Work / Test for Today:

2 Pipes were welded and installed

Planned Work / Test for Tomorrow:

Pipe Installation

Planned Work / Test for Next Week:

Pipe Installation and electrical wiring

CHANGED CONDITIONS/DELAY/CONFLICTS ENCOUNTERED (List any conflicts with the project [i.e., scope of work and/or drawings], delays to the project attributable to site and weather conditions, etc.

VISITORS AND DISCUSSIONS:

QUALITY CONTROL REPORT

MATERIALS DELIVERED TO JOB SITE

Quantity/Volume/ Weight	Description of Materials Received	Make/Model/Manufacturer	Material Lot Number	Inspection Performed By
None				

COMMENTS (acceptance status, inspection findings, etc.):

INSPECTIONS PERFORMED

Task/Activity Inspected	Inspection Performed	Findings
Pipe Installation	Visual inspection	OK

TESTS PERFORMED

Task/Activity Tested	Test Performed	Test Results (Pass/Fail) - Criteria
None		

QUALITY ISSUES AND RESOLUTIONS: None

SUBMITTALS INSPECTION / REVIEW

Submittal No.	Submittal Description	Specification/Plan Reference	Submittal Approved?		Comment/Reason/Action
NA	Daily Report	–	Yes ☐	No ☐	Pending
NA	SBO	–	Yes ☐	No ☐	Pending
NA	PTSP	–	Yes ☐	No ☐	Pending

REGULATORY COMPLIANCE REPORT

PERMIT INSPECTIONS PERFORMED: None

WASTE ACCUMULATION/STOCKPILE AREA INSPECTION

Inspection Performed By:				Signature of Inspector:			
Accumulation / Stockpile Area Inspected:	None						
No of Bins:		No of Tankers		No of Roll-Off Boxes:		No. of Tanks	

Inspection Results: None

GENERAL COMMENTS

General Comments~ (rework, directives, etc.):

None

ATTACHMENTS

List of Attachments: (examples, as applicable: submittals, meeting minutes, safety meeting minutes, COCs, weight tickets, manifests, profiles, rework item list, RFIs, DCNs, photographs, etc.):

Photo Log and Safety documentation

NOTE: Write all entries legibly in ink. Line out all unused portions or designate as "not applicable". Preparer signs first and last name on each completed daily report. This form may be filled out electronically and signed electronically.

Alec Spill — PREPARER'S SIGNATURE

01NOV16 — DATE

Location: New Influent Pump Skid
Description: Newly Installed Pipe
Date: 1 November 2016 Direction: West

Location: West Wall of GWTS
Description: Newly Installed Pipe
Date: 1 November 2016 Direction: Southwest

EA Engineering, Science, and Technology, Inc.

DAILY SAFETY INSPECTION CHECKLIST (TO BE COMPLETED EACH DAY OF CONSTRUCTION OR HTRW SITE ACTIVITIES)

Site: BULK FUELS FACILITY EXPANSION
Location: KAFB BLDG 19150
Project No.: 62599 DM01
Client: U.S. ARMY CORP OF ENGINEERS

Prepared by SSHO: JOHN CLOE BACA
Project Manager: DEVON JERCINOVIC
Date: 10/31/16

Rating	Y	N	N/A	Comments/Immediate Corrective Action[1]
Accident Prevention Plan (APP) and Site Safety and Health Plan (SSHP) General Requirements				
Are there new onsite personnel? • Did they receive pre-entry briefing and are their names recorded in field logbook or daily log? • Was the USACE PM made aware of the new personnel. • Required training and medical surveillance documentation received (e.g., 40-hr, 8 hr, etc.)?		X	X X X	
Did personnel sign in/out of site?	X			
Daily tailgate safety meetings conducted and documented?	X			
Were new activities performed today? Were hazards identified, discussed during the daily safety tailgate, and incorporated into revised APP/SSHP?		X		
New materials brought on site? MSDSs available?		X		
Exclusion (EZ), Contamination Reduction (CRZ), and Support Zones (SZ) delineated and enforced?			X	
General housekeeping measures in place to prevent hazards?	X			
Emergency Planning				
Were there any changes to emergency contact names, telephone numbers, or hospital? If so, were site personnel made aware and was information distributed/reposted.		X		
Adequate safety equipment inventory available?	X			
Fire extinguisher available (monthly inspection of extinguisher will suffice)	X			
Eyewash station(s) functioning and in place (weekly inspection of eye wash station will suffice)?	X			
First aid supplies available (weekly inspection of first aid kit will suffice)?	X			
Communication equipment readily available for emergencies?	X			
Any reported accidents/incidents at this site? If so, were accident reporting procedures followed?			X	
Air Monitoring				
Monitoring equipment specified in SSHP available and in working order? Air monitoring instrumentation for this site includes – check each if required/on site, note deficiencies in comments: • Combustible gas meter • Organic vapor analyzer • Contaminant specific analyzer for benzene (if total organic vapor concentrations exceed 0.5 ppm)			X	
Monitoring equipment calibrated and calibration records			X	

Y = Satisfactory or Yes; N = Unsatisfactory or No, N/A = Not applicable

Rating	Y	N	N/A	Comments/Immediate Corrective Action[1]
available?			X	
Environmental and personnel monitoring performed as specified in SSHP?			X	
PPE				
Proper dermal protection worn by EA and subcontracted employees when handling/ contacting hazardous chemicals or contaminated environmental media?			X	
Required PPE (hard hats, safety boots / shoes, eye protection with side shields, hearing protection) being worn by EA and subcontracted employees?	X			
PPE inspection completed by SSHO?	X			
Drill Rig Operations				
Daily rig inspection completed? Any equipment problems?			X	
Drill rigs/elevated equipment maintaining minimum 10-ft distance from energized (50 kV) overhead power lines?			X	
Investigation-derived Waste (IDW)				
Wastes properly staged, secured, and labeled at end of day?			X	

Additional Comments:

John M. Caldarone

Site Safety and Health Officer's Signature

10/31/16

Date

[1]If a deficiency is noted that cannot be immediately corrected, the SSHO will monitor the progress in correcting the deficiency and will document following:

- Date the deficiency was identified
- Description of the deficiency
- Name of the person responsible for correcting the deficiency
- Projected date of correction
- Actual date of correction.

Y = Satisfactory or Yes; N = Unsatisfactory or No, N/A = Not applicable

EA ENGINEERING, SCIENCE AND TECHNOLOGY, INC.
SAFETY MEETING REPORT

Date: 10/31/16	**Time:** 0700	**Duration of meeting:** 10min	**Project #** 62599.0101
Location: KAFB Bldg 19150		**Task:** Installing Pipe & Removing Tank Logo	

Type of meeting: X Daily ___ Weekly ___ Monthly ___ Other: _____

Items/Issues discussed:

1. Scope of Work & Noise Level on Boom Lift B.U. Alarm
2. Second Eyewash Operational
3. Tie-off in Lifts
4. Inspect Lifts
5. Fall Protection on Ladder Above 6'

Attach minutes of safety meeting if taken.

Safety questions/issues raised:	Actions/Follow-up needed:
1. None!	
2.	
3.	
4.	
5.	
6.	

Remarks:

Meeting conducted by:
Cde Baca

HEALTH AND SAFETY ACTIVITY REPORT

Site: BULK FUELS FACILITY EXPANSION Location: KAFB Bldg 19150

Weather Cond.: CLEAR Onsite Hours: From 0700 To 1430

Changes in PPE Levels[1]	Work Operations	Reasons for Change
NO CHANGES!		

Site Safety and Health Plan Violations	Corrective Action Specified	Corrective Action Taken [2](yes/no)
NO SAFETY VIOLATIONS!		

Observations and Comments:

Completed by: JOHN COE BACA
Site Health and Safety Supervisor

Date: 10/31/16

[1]Only SSHO may change PPE levels, using only criteria specified in APP/SSHP.
[2]If a deficiency is noted that cannot be immediately corrected, the SSHO will monitor the progress in correcting the deficiency and will document following:

- Date the deficiency was identified
- Description of the deficiency
- Name of the person responsible for correcting the deficiency
- Projected date of correction
- Actual date of correction.

DAILY REPORT

(ATTACH ADDITIONAL SHEETS IF NECESSARY)

CONTRACT NAME:	Kirtland AFB Bulk Fuels Facility Expansion of Dissolved Plume GWTS Design	REPORT NO:	020
CONTRACT NUMBER:	W912DR-12-D-0006	REPORT DATE:	02NOV16
REVISION NUMBER:	-	REVISION DATE:	-
TASK ORDER NUMBER:	DM01	PROJECT NAME / LOCATION:	KAFB, ABQ, NM
PROJECT NUMBER:	62599DM01	PROJECT DESCRIPTION:	KAFB GWTS EXPANSION
PROJECT MANAGER:	Devon Jercinovic	FIELD QUALITY MANAGER:	Alex Spilk
CONSTRUCTION MANAGER:	Matt Bowman	SITE SAFETY MANAGER:	John Cde Baca

AM WEATHER:	Cool, Hazey, Breezey	PM WEATHER:	Mostly Cloudy, warm, breezey	MAX TEMP (F):	72°		

SUMMARY OF WORK PERFORMED TODAY

Pipe Installation and Welding

HEALTH AND SAFETY REPORT

SAFETY ACTIONS TAKEN TODAY/SAFETY INSPECTIONS CONDUCTED (Include Observations, Safety Violations, Corrective Instructions Given, Corrective Actions Taken, and Results of Safety Inspections Conducted: Safety inspections ok.

TAILGATE TOPICS: Safe storage of materials, lift safety, welding safety, noise mitigation

SAFE BEHAVIOR OBSERVATIONS/SELF-ASSESSMENTS:

Safe Behavior Observed

OPERATIONS / PRODUCTION REPORT

WORK FORCE – CONTRACTOR AND SUBCONTRACTOR

Company	Cumulative Total of Work Hours From Previous Report	Total Hours Today	Total Work Hours From Start of Injection Event
Rupert	225	35	260
Techsas	76	7	83
Mick Rich	102	7	109

EQUIPMENT ON HAND

Description of Equipment	Make/Model/Manufacturer	Equipment ID Number	Inspection Performed By
Manlift #1	Genie GS-1930		Andres Poras
Manlift #2	Genie GS-1930		Andres Poras
Articulated Man Lift	JLG-4005	148370	Andres Poras
DC WELDER	Miller Pipe Pro 304	LH013526	Andres Poras

COMMENTS (acceptance status, inspection findings, etc.):

OK

WORK AND/OR TESTS ACCOMPLISHED OR IN PROGRESS

Performed Work / Test for Today: Pipes welded and installed

Planned Work / Test for Tomorrow:

Pipe installation + welding

Planned Work / Test for Next Week:

Pipe installation, electrical conduit + equipment installation

CHANGED CONDITIONS/DELAY/CONFLICTS ENCOUNTERED (List any conflicts with the project [i.e., scope of work and/or drawings], delays to the project attributable to site and weather conditions, etc.

VISITORS AND DISCUSSIONS: Discussed communication options for As mixing tank w/ Mark Dalzelle
Visitors: Trent Simpler, Wayne Bitner, Kole Lyndes, Scott Clark, Ted Sheets, Leon Boros, Chris Sipes, Suzanne Devegvie, Ben Creek, Paul Gurule, Mark Dalzelle, Aaron Brockett, Jayson Varela

QUALITY CONTROL REPORT

MATERIALS DELIVERED TO JOB SITE

Quantity/Volume/ Weight	Description of Materials Received	Make/Model/Manufacturer	Material Lot Number	Inspection Performed By
None				

COMMENTS (acceptance status, inspection findings, etc.):

INSPECTIONS PERFORMED

Task/Activity Inspected	Inspection Performed	Findings
Pipe fitting	Visual inspection	OK
Welding	Visual inspection	OK

TESTS PERFORMED

Task/Activity Tested	Test Performed	Test Results (Pass/Fail) - Criteria
None		

QUALITY ISSUES AND RESOLUTIONS: None

SUBMITTALS INSPECTION / REVIEW

Submittal No.	Submittal Description	Specification/Plan Reference	Submittal Approved?		Comment/Reason/Action
NA	Daily Report	–	Yes ☐	No ☐	Pending
NA	SBO	–	Yes ☐	No ☐	Pending
NA	PTSP	–	Yes ☐	No ☐	Pending

REGULATORY COMPLIANCE REPORT

PERMIT INSPECTIONS PERFORMED: None

WASTE ACCUMULATION/STOCKPILE AREA INSPECTION

Inspection Performed By:	NA	Signature of Inspector:	
Accumulation / Stockpile Area Inspected:			

No of Bins:		No of Tankers		No of Roll-Off Boxes:		No. of Tanks	

Inspection Results: NA

GENERAL COMMENTS

General Comments~ (rework, directives, etc.):

ATTACHMENTS

List of Attachments: (examples, as applicable: submittals, meeting minutes, safety meeting minutes, COCs, weight tickets, manifests, profiles, rework item list, RFIs, DCNs, photographs, etc.):

Photo log + Safety documentation

NOTE: Write all entries legibly in ink. Line out all unused portions or designate as "not applicable". Preparer signs first and last name on each completed daily report. This form may be filled out electronically and signed electronically.

Alec Spill — PREPARER'S SIGNATURE

2 NOV 16 — DATE

Location: South Side of Westernmost GAC Vessel
Description: Newly Installed Pipe
Date: 02 November 2016 Direction: Up

Location: West Wall of GWTS
Description: Newly Installed Pipe
Date: 02 November 2016 Direction: West

Location: Northwest Corner of GWTS
Description: Newly Installed Pipe
Date: 02 November 2016 Direction: Northwest

EA Engineering, Science, and Technology, Inc.

DAILY SAFETY INSPECTION CHECKLIST (TO BE COMPLETED EACH DAY OF CONSTRUCTION OR HTRW SITE ACTIVITIES)

Site: BULK FUELS FACILITY EXPANSION
Location: KAFB BLDG 19150
Project No.: 62599DM01
Client: U. S. ARMY CORP OF ENGINEERS

Prepared by SSHO: JOHN COE BACA
Project Manager: DEVON JERCINOVIC
Date: 11/2/16

Rating	Y	N	N/A	Comments/Immediate Corrective Action[1]
Accident Prevention Plan (APP) and Site Safety and Health Plan (SSHP) General Requirements				
Are there new onsite personnel? • Did they receive pre-entry briefing and are their names recorded in field logbook or daily log? • Was the USACE PM made aware of the new personnel. • Required training and medical surveillance documentation received (e.g., 40-hr, 8 hr, etc.)?		X	X X X	
Did personnel sign in/out of site?	X			
Daily tailgate safety meetings conducted and documented?	X			
Were new activities performed today? Were hazards identified, discussed during the daily safety tailgate, and incorporated into revised APP/SSHP?		X		
New materials brought on site? MSDSs available?		X		
Exclusion (EZ), Contamination Reduction (CRZ), and Support Zones (SZ) delineated and enforced?			X	
General housekeeping measures in place to prevent hazards?	X			
Emergency Planning				
Were there any changes to emergency contact names, telephone numbers, or hospital? If so, were site personnel made aware and was information distributed/reposted.		X		
Adequate safety equipment inventory available?	X			
Fire extinguisher available (monthly inspection of extinguisher will suffice)	X			
Eyewash station(s) functioning and in place (weekly inspection of eye wash station will suffice)?	X			
First aid supplies available (weekly inspection of first aid kit will suffice)?	X			
Communication equipment readily available for emergencies?	X			
Any reported accidents/incidents at this site? If so, were accident reporting procedures followed?			X	
Air Monitoring				
Monitoring equipment specified in SSHP available and in working order? Air monitoring instrumentation for this site includes – check each if required/on site, note deficiencies in comments: • Combustible gas meter • Organic vapor analyzer • Contaminant specific analyzer for benzene (if total organic vapor concentrations exceed 0.5 ppm)			X	
Monitoring equipment calibrated and calibration records			X	

Y = Satisfactory or Yes; N = Unsatisfactory or No, N/A = Not applicable

Rating	Y	N	N/A	Comments/Immediate Corrective Action[1]
available?				
Environmental and personnel monitoring performed as specified in SSHP?			X	
PPE				
Proper dermal protection worn by EA and subcontracted employees when handling/ contacting hazardous chemicals or contaminated environmental media?			X	
Required PPE (hard hats, safety boots / shoes, eye protection with side shields, hearing protection) being worn by EA and subcontracted employees?	X			
PPE inspection completed by SSHO?	X			
Drill Rig Operations				
Daily rig inspection completed? Any equipment problems?			X	
Drill rigs/elevated equipment maintaining minimum 10-ft distance from energized (50 kV) overhead power lines?			X	
Investigation-derived Waste (IDW)				
Wastes properly staged, secured, and labeled at end of day?			X	

Additional Comments:

John M. Ochoa

Site Safety and Health Officer's Signature

11/2/16

Date

[1]If a deficiency is noted that cannot be immediately corrected, the SSHO will monitor the progress in correcting the deficiency and will document following:

- Date the deficiency was identified
- Description of the deficiency
- Name of the person responsible for correcting the deficiency
- Projected date of correction
- Actual date of correction.

EA ENGINEERING, SCIENCE AND TECHNOLOGY, INC.
SAFETY MEETING REPORT

Date: 11/2/16	**Time:** 0700	**Duration of meeting:** 10 min	**Project #** 62599.0101
Location: KAFB Bldg 19150		**Task:** Welding & Pipe Install	

Type of meeting: X Daily ___ Weekly ___ Monthly ___ Other: _____

Items/Issues discussed:

1. Scope of Work
2. Welding Screens
3. Tie-off in Lifts
4. Fire Blanket on Tank
5. B/U Alarm on Boom Lift (Hearing Protection)
6) Lift Inspection
7)

Attach minutes of safety meeting if taken.

Safety questions/issues raised:	Actions/Follow-up needed:
1. Eating & Drinking in the Building	Corrected Issue
2.	
3.	
4.	
5.	
6.	

Remarks:

Meeting conducted by:
John Coe Baca

HEALTH AND SAFETY ACTIVITY REPORT

Site: BULK FUELS FACILITY EXPANSION Location: KAFB BLDG 19150

Weather Cond.: CLEAR Onsite Hours: From 0700 To 1400

Changes in PPE Levels[1]	Work Operations	Reasons for Change
No Changes in PPE		

Site Safety and Health Plan Violations	Corrective Action Specified	Corrective Action Taken [2](yes/no)
NO SAFETY VIOLATIONS		

Observations and Comments:
Observed personnel attempting to take drinks into building and corrected issue.

Completed by: JOHN CODE BACA Date: 11/02/16
Site Health and Safety Supervisor

[1]Only SSHO may change PPE levels, using only criteria specified in APP/SSHP.
[2]If a deficiency is noted that cannot be immediately corrected, the SSHO will monitor the progress in correcting the deficiency and will document following:

- Date the deficiency was identified
- Description of the deficiency
- Name of the person responsible for correcting the deficiency
- Projected date of correction
- Actual date of correction.

DAILY REPORT

(ATTACH ADDITIONAL SHEETS IF NECESSARY)

CONTRACT NAME:	Kirtland AFB Bulk Fuels Facility Expansion of Dissolved Plume GWTS Design	REPORT NO:	21
CONTRACT NUMBER:	W912DR-12-D-0006	REPORT DATE:	03NOV16
REVISION NUMBER:	-	REVISION DATE:	-
TASK ORDER NUMBER:	DM01	PROJECT NAME / LOCATION:	KAFB, ABQ, NM
PROJECT NUMBER:	62599DM01	PROJECT DESCRIPTION:	KAFB GWTS EXPANSION
PROJECT MANAGER:	Devon Jercinovic	FIELD QUALITY MANAGER:	Alex Spiller
CONSTRUCTION MANAGER:	Matt Bowmer	SITE SAFETY MANAGER:	John Cde Baca

AM WEATHER:	cool, light wind Mostly Cloudy	PM WEATHER:	cold, windy, Mostly Cloudy	MAX TEMP (F):	60°		

SUMMARY OF WORK PERFORMED TODAY

Pipe fitting and installation, pipewelding

HEALTH AND SAFETY REPORT

SAFETY ACTIONS TAKEN TODAY/SAFETY INSPECTIONS CONDUCTED (Include Observations, Safety Violations, Corrective Instructions Given, Corrective Actions Taken, and Results of Safety Inspections Conducted: ~~Welding~~ Welder arrived onsite without proper PPE; he was told to leave. No other issues noted

TAILGATE TOPICS: Food + Drink (outside of GWTS only), safety equipment and PPE, slips/trips/falls

SAFE BEHAVIOR OBSERVATIONS/SELF-ASSESSMENTS:

Safe behavior observed

OPERATIONS / PRODUCTION REPORT

WORK FORCE – CONTRACTOR AND SUBCONTRACTOR

Company	Cumulative Total of Work Hours From Previous Report	Total Hours Today	Total Work Hours From Start of Injection Event
Rupert	260	35	295
Techsos	83	7	90
Mick Rich	109	8	117

EQUIPMENT ON HAND

Description of Equipment	Make/Model/Manufacturer	Equipment ID Number	Inspection Performed By
Manlift #1	Genie GS-1930		Andres Poras
Manlift #2	Genie GS-1930		Andres Poras
Articulated Manlift	JLG-400S	148370	Andres Poras
DC Welder	Miller Pipe Pro 304	LH013526	Andres Poras

COMMENTS (acceptance status, inspection findings, etc.):

OK

WORK AND/OR TESTS ACCOMPLISHED OR IN PROGRESS

Performed Work / Test for Today: fit a pipe, welded flanges, delivered materials

Planned Work / Test for Tomorrow: Pipe installation, welding, .

Planned Work / Test for Next Week: Pipe installation, welding, set conduit and wiring

CHANGED CONDITIONS/DELAY/CONFLICTS ENCOUNTERED (List any conflicts with the project [i.e., scope of work and/or drawings], delays to the project attributable to site and weather conditions, etc. Nom

VISITORS AND DISCUSSIONS: Nom

QUALITY CONTROL REPORT

MATERIALS DELIVERED TO JOB SITE

Quantity/Volume/ Weight	Description of Materials Received	Make/Model/Manufacturer	Material Lot Number	Inspection Performed By
2	Butterfly Valves SS 8"	Forum	102697	A Spilk
14	Flanges		8-166H5369	A Spilk
4	various pipes			A Spilk

COMMENTS (acceptance status, inspection findings, etc.):

INSPECTIONS PERFORMED

Task/Activity Inspected	Inspection Performed	Findings
welding	visual inspection	OK/Good

TESTS PERFORMED

Task/Activity Tested	Test Performed	Test Results (Pass/Fail) - Criteria
Nom		

QUALITY ISSUES AND RESOLUTIONS:

SUBMITTALS INSPECTION / REVIEW

Submittal No.	Submittal Description	Specification/Plan Reference	Submittal Approved?		Comment/Reason/Action
NA	Daily Report	–	Yes ☐	No ☐	Pending
NA	SBO	–	Yes ☐	No ☐	Pending
NA	PTSP	–	Yes ☐	No ☐	Pending

REGULATORY COMPLIANCE REPORT

PERMIT INSPECTIONS PERFORMED: Nom

WASTE ACCUMULATION/STOCKPILE AREA INSPECTION

Inspection Performed By:		Signature of Inspector:	
Accumulation / Stockpile Area Inspected:	NA		

No of Bins:		No of Tankers		No of Roll-Off Boxes:		No. of Tanks	

Inspection Results: NA

GENERAL COMMENTS

General Comments~ (rework, directives, etc.): Good
ATTACHMENTS
List of Attachments: (examples, as applicable: submittals, meeting minutes, safety meeting minutes, COCs, weight tickets, manifests, profiles, rework item list, RFIs, DCNs, photographs, etc.): Photo log and SO Safety documentation
NOTE: Write all entries legibly in ink. Line out all unused portions or designate as "not applicable". Preparer signs first and last name on each completed daily report. This form may be filled out electronically and signed electronically. Alex Spill (PREPARER'S SIGNATURE) 3NOV16 (DATE)

Location: South of GWTS in Laydown Area
Description: Newly Delivered Pipes
Date: 3 November 2016 Direction: East

Location: South of GWTS in Laydown Area
Description: Newly Delivered Pipes
Date: 3 November 2016 Direction: West

Location: Floor of GWTS
Description: Newly Delivered Valve
Date: 3 November 2016 Direction: Down

Location: Floor of GWTS
Description: Newly Delivered Flanges
Date: 3 November 2016 Direction: Down

Location: South of GWTS in Laydown Area
Description: Pipe with Flanges Installed
Date: 3 November 2016 Direction: West

EA Engineering, Science, and Technology, Inc.

DAILY SAFETY INSPECTION CHECKLIST (TO BE COMPLETED EACH DAY OF CONSTRUCTION OR HTRW SITE ACTIVITIES)

Site: BULK FUELS FACILITY EXPANSION
Location: KAFB BLDG 19150
Project No.: 62594DM01
Client: U.S. ARMY CORP OF ENGINEERS

Prepared by SSHO: JOHN CODE BACA
Project Manager: DEVON JERCINOVIC
Date: 11/3/16

Rating	Y	N	N/A	Comments/Immediate Corrective Action[1]
Accident Prevention Plan (APP) and Site Safety and Health Plan (SSHP) General Requirements				
Are there new onsite personnel? • Did they receive pre-entry briefing and are their names recorded in field logbook or daily log? • Was the USACE PM made aware of the new personnel. • Required training and medical surveillance documentation received (e.g., 40-hr, 8 hr, etc.)?		X	X X X	
Did personnel sign in/out of site?	X			
Daily tailgate safety meetings conducted and documented?	X			
Were new activities performed today? Were hazards identified, discussed during the daily safety tailgate, and incorporated into revised APP/SSHP?		X		
New materials brought on site? MSDSs available?		X		
Exclusion (EZ), Contamination Reduction (CRZ), and Support Zones (SZ) delineated and enforced?			X	
General housekeeping measures in place to prevent hazards?	X			
Emergency Planning				
Were there any changes to emergency contact names, telephone numbers, or hospital? If so, were site personnel made aware and was information distributed/reposted.		X		
Adequate safety equipment inventory available?	X			
Fire extinguisher available (monthly inspection of extinguisher will suffice)	X			
Eyewash station(s) functioning and in place (weekly inspection of eye wash station will suffice)?	X			
First aid supplies available (weekly inspection of first aid kit will suffice)?	X			
Communication equipment readily available for emergencies?	X			
Any reported accidents/incidents at this site? If so, were accident reporting procedures followed?			X	
Air Monitoring				
Monitoring equipment specified in SSHP available and in working order? Air monitoring instrumentation for this site includes – check each if required/on site, note deficiencies in comments: • Combustible gas meter • Organic vapor analyzer • Contaminant specific analyzer for benzene (if total organic vapor concentrations exceed 0.5 ppm)			X	
Monitoring equipment calibrated and calibration records			X	

Y = Satisfactory or Yes; N = Unsatisfactory or No, N/A = Not applicable

Rating	Y	N	N/A	Comments/Immediate Corrective Action[1]
available?			X	
Environmental and personnel monitoring performed as specified in SSHP?			X	
PPE				
Proper dermal protection worn by EA and subcontracted employees when handling/ contacting hazardous chemicals or contaminated environmental media?			X	
Required PPE (hard hats, safety boots / shoes, eye protection with side shields, hearing protection) being worn by EA and subcontracted employees?	X			
PPE inspection completed by SSHO?	X			
Drill Rig Operations				
Daily rig inspection completed? Any equipment problems?			X	
Drill rigs/elevated equipment maintaining minimum 10-ft distance from energized (50 kV) overhead power lines?			X	
Investigation-derived Waste (IDW)				
Wastes properly staged, secured, and labeled at end of day?			X	

Additional Comments:

COYOTE STEEL WELDING SENT A WELDER TO PERFORM THE TASK OF RE-SETTING A PIPE HANGER. THE PERSON DID NOT MEET THE MINIMUM REQUIREMENTS TO WORK ON SITE, WHICH INCLUDED BUT LIMITED TO; NO SAFETY SHOES, HAD NOT READ OR SIGNED A.P.P.

THE PERSON WAS INFORMED THAT HE COULD NOT WORK ON SITE AND HE LEFT.

John M. Cole Baca

Site Safety and Health Officer's Signature

11/3/16

Date

[1]If a deficiency is noted that cannot be immediately corrected, the SSHO will monitor the progress in correcting the deficiency and will document following:

- Date the deficiency was identified
- Description of the deficiency
- Name of the person responsible for correcting the deficiency
- Projected date of correction
- Actual date of correction.

HEALTH AND SAFETY ACTIVITY REPORT

Site: KAFB BLDG 19150 Location: KAFB BLDG 19150

Weather Cond.: CLOUDY Onsite Hours: From 0700 To 1400

Changes in PPE Levels[1]	Work Operations	Reasons for Change
NO CHANGES !!!		

Site Safety and Health Plan Violations	Corrective Action Specified	Corrective Action Taken [2](yes/no)
NO SAFETY VIOLATIONS !!!		

Observations and Comments:
Attempt was made to work on site w/o all minimum requirements being met. WORKER WAS NOT ALLOWED to work.

Completed by: JOHN COE AKA
Site Health and Safety Supervisor

Date: 11/3/16

[1]Only SSHO may change PPE levels, using only criteria specified in APP/SSHP.
[2]If a deficiency is noted that cannot be immediately corrected, the SSHO will monitor the progress in correcting the deficiency and will document following:

- Date the deficiency was identified
- Description of the deficiency
- Name of the person responsible for correcting the deficiency
- Projected date of correction
- Actual date of correction.

EA ENGINEERING, SCIENCE AND TECHNOLOGY, INC.
SAFETY MEETING REPORT

Date: 11/3/16	Time: 0700	Duration of meeting: 10min	Project # 62599.0101
Location: KAFB BLDG 19150		Task: Welding, pipe install	

Type of meeting: X Daily ___ Weekly ___ Monthly ___ Other: _____

Items/Issues discussed:

1. SCOPE OF WORK
2. WELDING OPERATIONS
3. LIFT INSPECTIONS
4. USE OF FIRE BLANKETS
5. NO EATING NOR DRINKING IN THE BUILDING

Attach minutes of safety meeting if taken.

Safety questions/issues raised:	Actions/Follow-up needed:
1. WHETHER WORKER COULD WORK W/O SAFETY SHOES	No follow up needed person was not allowed to work on site
X	
3.	
4.	
5.	
6.	

Remarks:

Meeting conducted by:

JOHN CODE BACA

DAILY REPORT

(ATTACH ADDITIONAL SHEETS IF NECESSARY)

CONTRACT NAME:	Kirtland AFB Bulk Fuels Facility Expansion of Dissolved Plume GWTS Design	REPORT NO:	22
CONTRACT NUMBER:	W912DR-12-D-0006	REPORT DATE:	4NOV16
REVISION NUMBER:	-	REVISION DATE:	-
TASK ORDER NUMBER:	DM01	PROJECT NAME / LOCATION:	KAFB, ABQ, NM
PROJECT NUMBER:	62599DM01	PROJECT DESCRIPTION:	KAFB GWTS EXPANSION
PROJECT MANAGER:	Devon Jercinovic	FIELD QUALITY MANAGER:	Kevin McKeage
CONSTRUCTION MANAGER:	Matt Bowman	SITE SAFETY MANAGER:	Alex Spiller

AM WEATHER:	Cloudy, cool, moderate breeze	PM WEATHER:	Cloudy, cool, windy, rain	MAX TEMP (F):	60		

SUMMARY OF WORK PERFORMED TODAY

Installed ARV valves and welded pipe hangers

HEALTH AND SAFETY REPORT

SAFETY ACTIONS TAKEN TODAY/SAFETY INSPECTIONS CONDUCTED (Include Observations, Safety Violations, Corrective Instructions Given, Corrective Actions Taken, and Results of Safety Inspections Conducted:

Safety inspections OK.

TAILGATE TOPICS:

Lift inspections, Lift Tieoffs, slips, trips, falls, etc.

SAFE BEHAVIOR OBSERVATIONS/SELF-ASSESSMENTS:

Safe behavior observed

OPERATIONS / PRODUCTION REPORT

WORK FORCE – CONTRACTOR AND SUBCONTRACTOR

Company	Cumulative Total of Work Hours From Previous Report	Total Hours Today	Total Work Hours From Start of Injection Event
Rydar	295	21	316
Techsas	90	5	95
McKRich	117	5	122

EQUIPMENT ON HAND

Description of Equipment	Make/Model/Manufacturer	Equipment ID Number	Inspection Performed By
Manlift #1	Genie GS-1930		Elias Gallegos
Manlift #2	Genie GS-1930		Elias Gallegos
Articulated Manlift	JLG-400S	148370	Elias Gallegos
DC Welder	Miller Pipe Pro 304	LH013526	Elias Gallegos

COMMENTS (acceptance status, inspection findings, etc.):

OK.

WORK AND/OR TESTS ACCOMPLISHED OR IN PROGRESS

Performed Work / Test for Today:

Installed ARV valves and welded pipe hangers

Planned Work / Test for Tomorrow: Pipe installation ICM No work scheduled for tomorrow

Planned Work / Test for Next Week: Pipe installation

CHANGED CONDITIONS/DELAY/CONFLICTS ENCOUNTERED (List any conflicts with the project [i.e., scope of work and/or drawings], delays to the project attributable to site and weather conditions, etc. None

VISITORS AND DISCUSSIONS: None

QUALITY CONTROL REPORT

MATERIALS DELIVERED TO JOB SITE

Quantity/Volume/ Weight	Description of Materials Received	Make/Model/Manufacturer	Material Lot Number	Inspection Performed By
None				

COMMENTS (acceptance status, inspection findings, etc.): None

INSPECTIONS PERFORMED

Task/Activity Inspected	Inspection Performed	Findings
Welding	Visual Inspection	O.K.

TESTS PERFORMED

Task/Activity Tested	Test Performed	Test Results (Pass/Fail) - Criteria
None		

QUALITY ISSUES AND RESOLUTIONS: None

SUBMITTALS INSPECTION / REVIEW

Submittal No.	Submittal Description	Specification/Plan Reference	Submittal Approved?		Comment/Reason/Action
NA	Daily Report	–	Yes ☐	No ☐	Pending
NA	SBO	–	Yes ☐	No ☐	Pending
NA	PTSP	–	Yes ☐	No ☐	Pending

REGULATORY COMPLIANCE REPORT

PERMIT INSPECTIONS PERFORMED: None

WASTE ACCUMULATION/STOCKPILE AREA INSPECTION

Inspection Performed By:	NA			Signature of Inspector:			
Accumulation / Stockpile Area Inspected:							
No of Bins:		No of Tankers		No of Roll-Off Boxes:		No. of Tanks	

Inspection Results: NA

GENERAL COMMENTS

General Comments~ (rework, directives, etc.):

ATTACHMENTS

List of Attachments: (examples, as applicable: submittals, meeting minutes, safety meeting minutes, COCs, weight tickets, manifests, profiles, rework item list, RFIs, DCNs, photographs, etc.): Photo log and safety documentation

NOTE: Write all entries legibly in ink. Line out all unused portions or designate as "not applicable". Preparer signs first and last name on each completed daily report. This form may be filled out electronically and signed electronically.

PREPARER'S SIGNATURE

4NOV16

DATE

Location: Above Newly Installed GAC Vessels
Description: Newly Installed ARV Valve
Date: 4 November 2016 Direction: Up

Location: North Wall Above Newly Installed Influent Tank
Description: Newly Installed ARV Valve
Date: 4 November 2016 Direction: Northwest

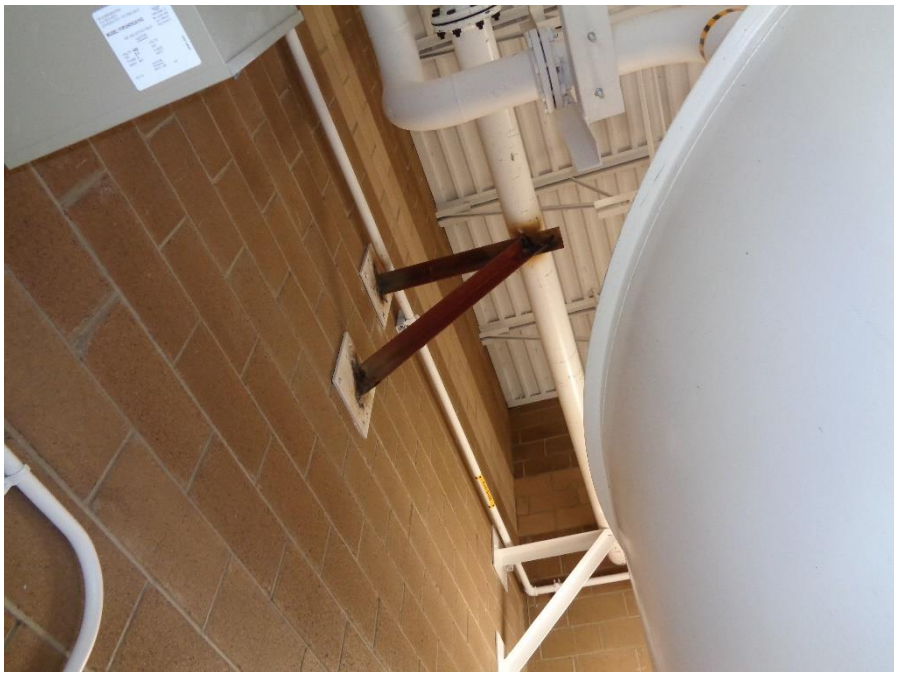

Location: South Wall Above Existing Effluent Tank
Description: Newly Installed Pipe Hanger
Date: 4 November 2016 Direction: West

Location: Above Newly Installed GAC Vessels
Description: Welded Newly Installed Piper Hanger
Date: 4 November 2016 Direction: Up

Location: Newly Installed Influent Tank
Description: Inside of the Newly Installed Influent Tank
Date: 4 November 2016 Direction: North

EA Engineering, Science, and Technology, Inc.

DAILY SAFETY INSPECTION CHECKLIST (TO BE COMPLETED EACH DAY OF CONSTRUCTION OR HTRW SITE ACTIVITIES)

Site: BULK FUELS FACILITY EXPAN
Location: KAFB BLDG 19150
Project No.: 62599.0001
Client: U.S ARMY CORP OF ENGINEERS

Prepared by SSHO: ALEX SPILLER
Project Manager: DEVON JERCINOVIC
Date: 11/4/16

Rating	Y	N	N/A	Comments/Immediate Corrective Action[1]
Accident Prevention Plan (APP) and Site Safety and Health Plan (SSHP) General Requirements				
Are there new onsite personnel? • Did they receive pre-entry briefing and are their names recorded in field logbook or daily log? • Was the USACE PM made aware of the new personnel. • Required training and medical surveillance documentation received (e.g., 40-hr, 8 hr, etc.)?		X	X X X	
Did personnel sign in/out of site?	X			
Daily tailgate safety meetings conducted and documented?	X			
Were new activities performed today? Were hazards identified, discussed during the daily safety tailgate, and incorporated into revised APP/SSHP?		X		
New materials brought on site? MSDSs available?		X		
Exclusion (EZ), Contamination Reduction (CRZ), and Support Zones (SZ) delineated and enforced?			X	
General housekeeping measures in place to prevent hazards?	X			
Emergency Planning				
Were there any changes to emergency contact names, telephone numbers, or hospital? If so, were site personnel made aware and was information distributed/reposted.		X		
Adequate safety equipment inventory available?	X			
Fire extinguisher available (monthly inspection of extinguisher will suffice)	X			
Eyewash station(s) functioning and in place (weekly inspection of eye wash station will suffice)?	X			
First aid supplies available (weekly inspection of first aid kit will suffice)?	X			
Communication equipment readily available for emergencies?	X			
Any reported accidents/incidents at this site? If so, were accident reporting procedures followed?			X	
Air Monitoring				
Monitoring equipment specified in SSHP available and in working order? Air monitoring instrumentation for this site includes – check each if required/on site, note deficiencies in comments: • Combustible gas meter • Organic vapor analyzer • Contaminant specific analyzer for benzene (if total organic vapor concentrations exceed 0.5 ppm)			X	
Monitoring equipment calibrated and calibration records			X	

Y = Satisfactory or Yes; N = Unsatisfactory or No, N/A = Not applicable

Rating	Y	N	N/A	Comments/Immediate Corrective Action[1]
available?			X	
Environmental and personnel monitoring performed as specified in SSHP?			X	
PPE				
Proper dermal protection worn by EA and subcontracted employees when handling/ contacting hazardous chemicals or contaminated environmental media?			X	
Required PPE (hard hats, safety boots / shoes, eye protection with side shields, hearing protection) being worn by EA and subcontracted employees?	X			
PPE inspection completed by SSHO?	X			
Drill Rig Operations				
Daily rig inspection completed? Any equipment problems?			X	
Drill rigs/elevated equipment maintaining minimum 10-ft distance from energized (50 kV) overhead power lines?			X	
Investigation-derived Waste (IDW)				
Wastes properly staged, secured, and labeled at end of day?			X	

Additional Comments: Safe Behavior Observed!

Alex Spill
Site Safety and Health Officer's Signature

11/4/16
Date

[1]If a deficiency is noted that cannot be immediately corrected, the SSHO will monitor the progress in correcting the deficiency and will document following:

- Date the deficiency was identified
- Description of the deficiency
- Name of the person responsible for correcting the deficiency
- Projected date of correction
- Actual date of correction.

Y = Satisfactory or Yes; N = Unsatisfactory or No, N/A = Not applicable

EA ENGINEERING, SCIENCE AND TECHNOLOGY, INC.
SAFETY MEETING REPORT

Date: 11/4/16	**Time:** 0700	**Duration of meeting:** 10 min	**Project #** 62599.0001
Location: KAFB Bldg 19150		**Task:** Welding, pipe install	

Type of meeting: X Daily ___ Weekly ___ Monthly ___ Other: _____

Items/Issues discussed:

1. Scope of Work
2. Lift Inspection
3. Tie-off in lifts
4. No Eating / Drinking in Bldg
5. Slips / trips / falls

Attach minutes of safety meeting if taken.

Safety questions/issues raised:	Actions/Follow-up needed:
1. Site controls below overhead work	Doors blocked w/ safety cones and tape
2.	No follow up needed
3.	
4.	
5.	
6.	

Remarks:

Meeting conducted by:

Alex Spiller

HEALTH AND SAFETY ACTIVITY REPORT

Site: BULK FUELS FACILITY EXPANSION Location: KAFB BLDG 19150

Weather Cond.: Rainy, windy, cold Onsite Hours: From 0700 To 1120

Changes in PPE Levels[1]	Work Operations	Reasons for Change
No changes		

Site Safety and Health Plan Violations	Corrective Action Specified	Corrective Action Taken [2](yes/no)
No safety violations		

Observations and Comments:
Safe behavior observed

Completed by: ALEX SPILLER Date: 11/4/16
Site Health and Safety Supervisor

[1]Only SSHO may change PPE levels, using only criteria specified in APP/SSHP.
[2]If a deficiency is noted that cannot be immediately corrected, the SSHO will monitor the progress in correcting the deficiency and will document following:

- Date the deficiency was identified
- Description of the deficiency
- Name of the person responsible for correcting the deficiency
- Projected date of correction
- Actual date of correction.

DAILY REPORT

(ATTACH ADDITIONAL SHEETS IF NECESSARY)

CONTRACT NAME:	Kirtland AFB Bulk Fuels Facility Expansion of Dissolved Plume GWTS Design	REPORT NO:	23
CONTRACT NUMBER:	W912DR-12-D-0006	REPORT DATE:	7NOV16
REVISION NUMBER:	-	REVISION DATE:	-
TASK ORDER NUMBER:	DM01	PROJECT NAME / LOCATION:	KAFB, ABQ, NM
PROJECT NUMBER:	62599DM01	PROJECT DESCRIPTION:	KAFB GWTS EXPANSION
PROJECT MANAGER:	Devon Jercinovic	FIELD QUALITY MANAGER:	Kody Garcia
CONSTRUCTION MANAGER:	Luke Rief	SITE SAFETY MANAGER:	John Cde Baca

AM WEATHER:	Mostly Cloudy ~~Cloudy~~, Cool, Breezy.	PM WEATHER:	Cloudy, windy, Cool	MAX TEMP (F):	64°F		

SUMMARY OF WORK PERFORMED TODAY

Pipe fitting and installation; ~~cover~~ blind flanges on new influent and effluent tanks
Welding on connections/pipe)

HEALTH AND SAFETY REPORT

SAFETY ACTIONS TAKEN TODAY/SAFETY INSPECTIONS CONDUCTED (Include Observations, Safety Violations, Corrective Instructions Given, Corrective Actions Taken, and Results of Safety Inspections Conducted:

Observed safe work practices

TAILGATE TOPICS: Lift safety, slips/trips/falls, eyewash, overhead hazards, PPE, Food and drink

SAFE BEHAVIOR OBSERVATIONS/SELF-ASSESSMENTS:

Safe behavior observed

OPERATIONS / PRODUCTION REPORT

WORK FORCE – CONTRACTOR AND SUBCONTRACTOR

Company	Cumulative Total of Work Hours From Previous Report	Total Hours Today	Total Work Hours From Start of Injection Event
Rupert	316	28	344
Techsas	95	2	97
Mick Rich	122	6	128

EQUIPMENT ON HAND

Description of Equipment	Make/Model/Manufacturer	Equipment ID Number	Inspection Performed By
Manlift #1	Genie GS. 1930		Andres Poras
Manlift #2	Genie GS-1930		Andres Poras
Articulated Manlift	JLG-4005	148370	Andres Poras
DC Welder	Miller Pipe Pro 304	LH011352 6	John Cde Baca

COMMENTS (acceptance status, inspection findings, etc.):

OK; effluent from GAC pipe resized

WORK AND/OR TESTS ACCOMPLISHED OR IN PROGRESS

Performed Work / Test for Today:

Pipe fitted and installed, welding

Planned Work / Test for Tomorrow:

Pipe fitting and installations

Planned Work / Test for Next Week:

Electrical work, possible pipe fitting

CHANGED CONDITIONS/DELAY/CONFLICTS ENCOUNTERED (List any conflicts with the project [i.e., scope of work and/or drawings], delays to the project attributable to site and weather conditions, etc. GAC effluent line ~~resized~~ refitted (field adjusted ~~5~~ longer)

VISITORS AND DISCUSSIONS: None

QUALITY CONTROL REPORT

MATERIALS DELIVERED TO JOB SITE

Quantity/Volume/ Weight	Description of Materials Received	Make/Model/Manufacturer	Material Lot Number	Inspection Performed By
NA				

COMMENTS (acceptance status, inspection findings, etc.):

INSPECTIONS PERFORMED

Task/Activity Inspected	Inspection Performed	Findings
Pipes	visual inspection	ok

TESTS PERFORMED

Task/Activity Tested	Test Performed	Test Results (Pass/Fail) - Criteria
Pipes	visual inspection	OK

QUALITY ISSUES AND RESOLUTIONS:

SUBMITTALS INSPECTION / REVIEW

Submittal No.	Submittal Description	Specification/Plan Reference	Submittal Approved?		Comment/Reason/Action
N/A	Daily Report	–	Yes ☐	No ☐	Pending
N/A	SBO	–	Yes ☐	No ☐	Pending
N/A	PTSP	–	Yes ☐	No ☐	Pending

REGULATORY COMPLIANCE REPORT

PERMIT INSPECTIONS PERFORMED: N/A

WASTE ACCUMULATION/STOCKPILE AREA INSPECTION

Inspection Performed By:		Signature of Inspector:	
Accumulation / Stockpile Area Inspected:	N/A		

No of Bins:		No of Tankers		No of Roll-Off Boxes:		No. of Tanks	

Inspection Results: N/A

GENERAL COMMENTS

General Comments~ (rework, directives, etc.):

ATTACHMENTS

List of Attachments: (examples, as applicable: submittals, meeting minutes, safety meeting minutes, COCs, weight tickets, manifests, profiles, rework item list, RFIs, DCNs, photographs, etc.): Photo Log and Safety documentation

NOTE: Write all entries legibly in ink. Line out all unused portions or designate as "not applicable". Preparer signs first and last name on each completed daily report. This form may be filled out electronically and signed electronically.

Kadya A. Garcia — PREPARER'S SIGNATURE

07 Nov 2016 — DATE

Location: Above New GAC Vessels
Description: Newly Installed Section of Pipe
Date: 07 November 2016 Direction: Up

Location: New Influent Feed Tank
Description: New Blind Flange on Influent Feed Tank
Date: 07 November 2016 Direction: Northeast

Location: New Effluent Feed Tank
Description: New Flange on Effluent Feed Tank
Date: 07 November 2016 Direction: West

Location: New Influent Feed Tank
Description: New Blind Flange on Influent Feed Tank
Date: 07 November 2016 Direction: West

Location: New Effluent Feed Tank
Description: New Flange on Effluent Feed Tank
Date: 07 November 2016 Direction: Northeast

Location: New Influent Feed Tank
Description: New Blind Flange on Influent Feed Tank
Date: 07 November 2016 Direction: Northeast

Location: New Influent Feed Tank
Description: Newly Installed Butterfly Valve
Date: 07 November 2016 Direction: South

EA Engineering, Science, and Technology, Inc.

DAILY SAFETY INSPECTION CHECKLIST
(TO BE COMPLETED EACH DAY OF CONSTRUCTION OR HTRW SITE ACTIVITIES)

Site: BULK FUELS FACILITY EXPANSION
Location: KAFB BLDG 19150
Project No.: 62599 DM01
Client: U.S. ARMY CORP OF ENGINEERS

Prepared by SSHO: JOHN C DE BACA
Project Manager: DEVON JERCINOVIC
Date: 11/7/16

Rating	Y	N	N/A	Comments/Immediate Corrective Action[1]
Accident Prevention Plan (APP) and Site Safety and Health Plan (SSHP) General Requirements				
Are there new onsite personnel? • Did they receive pre-entry briefing and are their names recorded in field logbook or daily log? • Was the USACE PM made aware of the new personnel. • Required training and medical surveillance documentation received (e.g., 40-hr, 8 hr, etc.)?	X X X	X		
Did personnel sign in/out of site?	X			
Daily tailgate safety meetings conducted and documented?	X			
Were new activities performed today? Were hazards identified, discussed during the daily safety tailgate, and incorporated into revised APP/SSHP?		X		
New materials brought on site? MSDSs available?		X		
Exclusion (EZ), Contamination Reduction (CRZ), and Support Zones (SZ) delineated and enforced?			X	
General housekeeping measures in place to prevent hazards?	X			
Emergency Planning				
Were there any changes to emergency contact names, telephone numbers, or hospital? If so, were site personnel made aware and was information distributed/reposted.		X		
Adequate safety equipment inventory available?	X			
Fire extinguisher available (monthly inspection of extinguisher will suffice)	X			
Eyewash station(s) functioning and in place (weekly inspection of eye wash station will suffice)?	X			
First aid supplies available (weekly inspection of first aid kit will suffice)?	X			
Communication equipment readily available for emergencies?	X			
Any reported accidents/incidents at this site? If so, were accident reporting procedures followed?			X	
Air Monitoring				
Monitoring equipment specified in SSHP available and in working order? Air monitoring instrumentation for this site includes – check each if required/on site, note deficiencies in comments: • Combustible gas meter • Organic vapor analyzer • Contaminant specific analyzer for benzene (if total organic vapor concentrations exceed 0.5 ppm)			X	
Monitoring equipment calibrated and calibration records			X	

Y = Satisfactory or Yes; N = Unsatisfactory or No, N/A = Not applicable

Rating	Y	N	N/A	Comments/Immediate Corrective Action[1]
available?			X	
Environmental and personnel monitoring performed as specified in SSHP?			X	
PPE				
Proper dermal protection worn by EA and subcontracted employees when handling/ contacting hazardous chemicals or contaminated environmental media?			X	
Required PPE (hard hats, safety boots / shoes, eye protection with side shields, hearing protection) being worn by EA and subcontracted employees?	X			
PPE inspection completed by SSHO?	X			
Drill Rig Operations				
Daily rig inspection completed? Any equipment problems?			X	
Drill rigs/elevated equipment maintaining minimum 10-ft distance from energized (50 kV) overhead power lines?			X	
Investigation-derived Waste (IDW)				
Wastes properly staged, secured, and labeled at end of day?			X	

Additional Comments:

NEW PERSONNEL ON-SITE WERE GIVEN AN INDOCTRINATION OF SAFETY PROCEDURES AND REQUIRENTS. NEW PERSONNEL ARE IN SUPERVISORY CAPACITY ROLES AND WILL NOT BE USING ANY EQUIPMENT OR TOOLS. ITEMS REVIEWED WERE: FIRST AID KIT, EYEWASH, FIRE EXTINGUISHER, MUSTER AREA, MSDS AND DRINKING WATER LOCATIONS. EXPECTATIONS ALSO COVERED WERE: PPE, TRAINING REQUIRED AND SAFETY HAZARDS AT THE SITE.

John M. Cd Baca

Site Safety and Health Officer's Signature

11/7/16

Date

[1]If a deficiency is noted that cannot be immediately corrected, the SSHO will monitor the progress in correcting the deficiency and will document following:

- Date the deficiency was identified
- Description of the deficiency
- Name of the person responsible for correcting the deficiency
- Projected date of correction
- Actual date of correction.

Y = Satisfactory or Yes; N = Unsatisfactory or No, N/A = Not applicable

EA ENGINEERING, SCIENCE AND TECHNOLOGY, INC.
SAFETY MEETING REPORT

Date: 11/7/16	Time: 0700	Duration of meeting: 10min	Project # 62599DM01
Location: KAFB Bldg [redacted] 19150		Task: Tank welding, pipe install	

Type of meeting: X Daily ___ Weekly ___ Monthly ___ Other: _____

Items/Issues discussed:

1. LIFT INSPECTION
2. TIE OFF IN LIFTS
3. INDOCTRINATION TO NEW PERSONNEL
4.
5.

Attach minutes of safety meeting if taken.

Safety questions/issues raised:	Actions/Follow-up needed:
1. NONE!	
2.	
3.	
4.	
5.	
6.	

Remarks:

Meeting conducted by:

JOHN COE BACA

HEALTH AND SAFETY ACTIVITY REPORT

Site: BULK FUELS FACILITY EXPANSION Location: KAFB BLDG 19150

Weather Cond.: PARTLY CLOUDY Onsite Hours: From 0700 To 1430

Changes in PPE Levels[1]	Work Operations	Reasons for Change
NO CHANGES!!!		

Site Safety and Health Plan Violations	Corrective Action Specified	Corrective Action Taken [2](yes/no)
NO VIOLATIONS		

Observations and Comments:
NONE!!!

Completed by: JOHN COE BACA Date: 11/7/16
Site Health and Safety Supervisor

[1]Only SSHO may change PPE levels, using only criteria specified in APP/SSHP.
[2]If a deficiency is noted that cannot be immediately corrected, the SSHO will monitor the progress in correcting the deficiency and will document following:

- Date the deficiency was identified
- Description of the deficiency
- Name of the person responsible for correcting the deficiency
- Projected date of correction
- Actual date of correction.

DAILY REPORT

(ATTACH ADDITIONAL SHEETS IF NECESSARY)

CONTRACT NAME:	Kirtland AFB Bulk Fuels Facility Expansion of Dissolved Plume GWTS Design	REPORT NO:	24
CONTRACT NUMBER:	W912DR-12-D-0006	REPORT DATE:	8NOV16
REVISION NUMBER:	-	REVISION DATE:	-
TASK ORDER NUMBER:	DM01	PROJECT NAME / LOCATION:	KAFB, ABQ, NM
PROJECT NUMBER:	62599DM01	PROJECT DESCRIPTION:	KAFB, GWTS Expansion
PROJECT MANAGER:	Devon Jercinovic	FIELD QUALITY MANAGER:	Kody Garcia
CONSTRUCTION MANAGER:	Luke Rief	SITE SAFETY MANAGER:	John Cde Baca

AM WEATHER:	Clear, cool	PM WEATHER:	Clear/breezy	MAX TEMP (F):	61°		

SUMMARY OF WORK PERFORMED TODAY

Pipe fitting and installation, welding pipe, flange installation
KB~~wits~~ Site evaluation for electrical work

HEALTH AND SAFETY REPORT

SAFETY ACTIONS TAKEN TODAY/SAFETY INSPECTIONS CONDUCTED (Include Observations, Safety Violations, Corrective Instructions Given, Corrective Actions Taken, and Results of Safety Inspections Conducted:

Observed safe behavior

TAILGATE TOPICS: Overhead hazards, slips/trips/falls, eyewash, fire extinguishers PPE, Lift Safety

SAFE BEHAVIOR OBSERVATIONS/SELF-ASSESSMENTS:

Safe behavior observed

OPERATIONS / PRODUCTION REPORT

WORK FORCE – CONTRACTOR AND SUBCONTRACTOR

Company	Cumulative Total of Work Hours From Previous Report	Total Hours Today	Total Work Hours From Start of Injection Event
Rupert Plumbing	344	28	372
Techsas	97	3	100
Mick Rich	128	7	135
Wilson Electric	21	1	22

EQUIPMENT ON HAND

Description of Equipment	Make/Model/Manufacturer	Equipment ID Number	Inspection Performed By
Manlift #1	Genre GS-1930		Andres Poras
Manlift #2	Genre GS-1930		Andres Poras
KB ~~Articulated Manlift~~	~~SLG-1005~~	~~148370~~	~~Andres Poras~~
DC Welder	Miller Pipe Pro 304	LH011 3526	John Cde Baca

COMMENTS (acceptance status, inspection findings, etc.):

OK

WORK AND/OR TESTS ACCOMPLISHED OR IN PROGRESS

Performed Work / Test for Today: Site evaluation for electrical work

Installed GAC influent and effluent pipes. Installed flanges.

Planned Work / Test for Tomorrow:

Pipe fitting and installation

Planned Work / Test for Next Week:

Electrical conduit installation

CHANGED CONDITIONS/DELAY/CONFLICTS ENCOUNTERED (List any conflicts with the project [i.e., scope of work and/or drawings], delays to the project attributable to site and weather conditions, etc.

VISITORS AND DISCUSSIONS: Lee Becker,

QUALITY CONTROL REPORT

MATERIALS DELIVERED TO JOB SITE

Quantity/Volume/ Weight	Description of Materials Received	Make/Model/Manufacturer	Material Lot Number	Inspection Performed By
NA				

COMMENTS (acceptance status, inspection findings, etc.):

INSPECTIONS PERFORMED

Task/Activity Inspected	Inspection Performed	Findings
pipes	visual inspection	ok

TESTS PERFORMED

Task/Activity Tested	Test Performed	Test Results (Pass/Fail) - Criteria
Pipes	visual inspection	OK

QUALITY ISSUES AND RESOLUTIONS:

SUBMITTALS INSPECTION / REVIEW

Submittal No.	Submittal Description	Specification/Plan Reference	Submittal Approved?		Comment/Reason/Action
NA	Daily Report	–	Yes ☐	No ☐	Pending
NA	SBO	–	Yes ☐	No ☐	Pending
NA	PTSP	–	Yes ☐	No ☐	Pending

REGULATORY COMPLIANCE REPORT

PERMIT INSPECTIONS PERFORMED: NA

WASTE ACCUMULATION/STOCKPILE AREA INSPECTION

Inspection Performed By:		Signature of Inspector:			
Accumulation / Stockpile Area Inspected:	NA				
No of Bins:		No of Tankers		No of Roll-Off Boxes:		No. of Tanks	

Inspection Results: NA

GENERAL COMMENTS

General Comments~ (rework, directives, etc.):

ATTACHMENTS

List of Attachments: (examples, as applicable: submittals, meeting minutes, safety meeting minutes, COCs, weight tickets, manifests, profiles, rework item list, RFIs, DCNs, photographs, etc.): Photo log and safety documentation

NOTE: Write all entries legibly in ink. Line out all unused portions or designate as "not applicable". Preparer signs first and last name on each completed daily report. This form may be filled out electronically and signed electronically.

Kody A. Garcia — PREPARER'S SIGNATURE

08Nov16 — DATE

Location: New Effluent Feed Tank
Description: New Flange on Effluent Feed Tank
Date: 08 November 2016 Direction: Northwest

Location: New Influent Feed Tank
Description: New Flange on Influent Feed Tank
Date: 08 November 2016 Direction: Northwest

Location: Between New GAC Vessels
Description: Newly Installed Section of Pipe for GAC Effluent
Date: 08 November 2016 Direction: North

Location: Between New GAC Vessels
Description: Newly Installed Section of Pipe for GAC Influent
Date: 08 November 2016 Direction: North

EA Engineering, Science, and Technology, Inc.

DAILY SAFETY INSPECTION CHECKLIST (TO BE COMPLETED EACH DAY OF CONSTRUCTION OR HTRW SITE ACTIVITIES)

Site: BULK FUELS FACILITY EXPANSION
Location: KAFB BLDG 19150
Project No.: 625990M01
Client: U.S. ARMY CORP OF ENGINEERS

Prepared by SSHO: JOHN CODE BACA
Project Manager: DEVON JERCINOVIC
Date : 11/8/16

Rating	Y	N	N/A	Comments/Immediate Corrective Action[1]
Accident Prevention Plan (APP) and Site Safety and Health Plan (SSHP) General Requirements				
Are there new onsite personnel? • Did they receive pre-entry briefing and are their names recorded in field logbook or daily log? • Was the USACE PM made aware of the new personnel. • Required training and medical surveillance documentation received (e.g., 40-hr, 8 hr, etc.)?		X	X X X	
Did personnel sign in/out of site?	X			
Daily tailgate safety meetings conducted and documented?	X			
Were new activities performed today? Were hazards identified, discussed during the daily safety tailgate, and incorporated into revised APP/SSHP?		X		
New materials brought on site? MSDSs available?		X		
Exclusion (EZ), Contamination Reduction (CRZ), and Support Zones (SZ) delineated and enforced?			X	
General housekeeping measures in place to prevent hazards?	X			
Emergency Planning				
Were there any changes to emergency contact names, telephone numbers, or hospital? If so, were site personnel made aware and was information distributed/reposted.		X		
Adequate safety equipment inventory available?	X			
Fire extinguisher available (monthly inspection of extinguisher will suffice)	X			
Eyewash station(s) functioning and in place (weekly inspection of eye wash station will suffice)?	X			
First aid supplies available (weekly inspection of first aid kit will suffice)?	X			
Communication equipment readily available for emergencies?	X			
Any reported accidents/incidents at this site? If so, were accident reporting procedures followed?			X	
Air Monitoring				
Monitoring equipment specified in SSHP available and in working order? Air monitoring instrumentation for this site includes – check each if required/on site, note deficiencies in comments: • Combustible gas meter • Organic vapor analyzer • Contaminant specific analyzer for benzene (if total organic vapor concentrations exceed 0.5 ppm)			X	
Monitoring equipment calibrated and calibration records			X	

Y = Satisfactory or Yes; N = Unsatisfactory or No, N/A = Not applicable

Rating	Y	N	N/A	Comments/Immediate Corrective Action[1]
available?			X	
Environmental and personnel monitoring performed as specified in SSHP?			X	
PPE				
Proper dermal protection worn by EA and subcontracted employees when handling/ contacting hazardous chemicals or contaminated environmental media?			X	
Required PPE (hard hats, safety boots / shoes, eye protection with side shields, hearing protection) being worn by EA and subcontracted employees?	X			
PPE inspection completed by SSHO?	X			
Drill Rig Operations				
Daily rig inspection completed? Any equipment problems?			X	
Drill rigs/elevated equipment maintaining minimum 10-ft distance from energized (50 kV) overhead power lines?			X	
Investigation-derived Waste (IDW)				
Wastes properly staged, secured, and labeled at end of day?			X	

Additional Comments:

John M. Cd Baca
Site Safety and Health Officer's Signature

11/8/16
Date

[1]If a deficiency is noted that cannot be immediately corrected, the SSHO will monitor the progress in correcting the deficiency and will document following:

- Date the deficiency was identified
- Description of the deficiency
- Name of the person responsible for correcting the deficiency
- Projected date of correction
- Actual date of correction.

Y = Satisfactory or Yes; N = Unsatisfactory or No, N/A = Not applicable

EA ENGINEERING, SCIENCE AND TECHNOLOGY, INC.
SAFETY MEETING REPORT

Date: 11/8/16	**Time:** 0700	**Duration of meeting:** 10 min	**Project #** 62599 DM01
Location: KAFB BLDG 19150		**Task:** WELDING, Pipe INSTALL	

Type of meeting: X Daily ___ Weekly ___ Monthly ___ Other: _____

Items/Issues discussed:

1. SCOPE OF WORK
2. WELDING SAFETY
3. TIE OFF IN LIFTS
4. LIFT INSPECTION
5. HEARING PROTECTION

Attach minutes of safety meeting if taken.

Safety questions/issues raised:	Actions/Follow-up needed:
1. NONE!	
2.	
3.	
4.	
5.	
6.	

Remarks:

Meeting conducted by:
JOHN CODEBACA

HEALTH AND SAFETY ACTIVITY REPORT

Site: BULK FUELS FACILITY EXPANSION Location: KAFB BLDG 19150

Weather Cond.: CLEAR Onsite Hours: From 0700 To 1400

Changes in PPE Levels[1]	Work Operations	Reasons for Change
No changes in PPE levels !!!		

Site Safety and Health Plan Violations	Corrective Action Specified	Corrective Action Taken [2](yes/no)
No violation !!!		

Observations and Comments:
NONE !!!

Completed by: JOHN CODE BACA Date: 11/8/16
Site Health and Safety Supervisor

[1]Only SSHO may change PPE levels, using only criteria specified in APP/SSHP.
[2]If a deficiency is noted that cannot be immediately corrected, the SSHO will monitor the progress in correcting the deficiency and will document following:

- Date the deficiency was identified
- Description of the deficiency
- Name of the person responsible for correcting the deficiency
- Projected date of correction
- Actual date of correction.

DAILY REPORT

(ATTACH ADDITIONAL SHEETS IF NECESSARY)

CONTRACT NAME:	Kirtland AFB Bulk Fuels Facility Expansion of Dissolved Plume GWTS Design	REPORT NO:	25
CONTRACT NUMBER:	W912DR-12-D-0006	REPORT DATE:	9NOV16
REVISION NUMBER:	-	REVISION DATE:	-
TASK ORDER NUMBER:	DM01	PROJECT NAME / LOCATION:	KAFB, ABQ, NM
PROJECT NUMBER:	62599DM01	PROJECT DESCRIPTION:	KAFB GWTS EXPANSION
PROJECT MANAGER:	Devon Jercinovic	FIELD QUALITY MANAGER:	Alex Spiller
CONSTRUCTION MANAGER:	Luke Rief	SITE SAFETY MANAGER:	John CdeBaca

AM WEATHER:	Cool, few clouds, light wind	PM WEATHER:	warm, few clouds, breezy	MAX TEMP (F):	62°		

SUMMARY OF WORK PERFORMED TODAY

Pipe installation, inspect worksite for conduit placement, straight out site

HEALTH AND SAFETY REPORT

SAFETY ACTIONS TAKEN TODAY/SAFETY INSPECTIONS CONDUCTED (Include Observations, Safety Violations, Corrective Instructions Given, Corrective Actions Taken, and Results of Safety Inspections Conducted:

Safe work practices Observed

TAILGATE TOPICS: Lift safety, housekeeping, lockout/tag-out

SAFE BEHAVIOR OBSERVATIONS/SELF-ASSESSMENTS:

Safe behavior observed

OPERATIONS / PRODUCTION REPORT

WORK FORCE – CONTRACTOR AND SUBCONTRACTOR

Company	Cumulative Total of Work Hours From Previous Report	Total Hours Today	Total Work Hours From Start of Injection Event
Rupert Plumbing	372	12	384
Techsas	100	4	104
Mick Rich	135	6	141
Wilson electric	22	2	24

EQUIPMENT ON HAND

Description of Equipment	Make/Model/Manufacturer	Equipment ID Number	Inspection Performed By
Manlift #1	Genie GS-1930		Andres Poras
Manlift #2	Genie GS-1930		Andres Poras

COMMENTS (acceptance status, inspection findings, etc.):

ok

WORK AND/OR TESTS ACCOMPLISHED OR IN PROGRESS

Performed Work / Test for Today: pipe was installed, site was straightened up

Planned Work / Test for Tomorrow:

Conduit to be installed

Planned Work / Test for Next Week:

wiring and conduit installation

CHANGED CONDITIONS/DELAY/CONFLICTS ENCOUNTERED (List any conflicts with the project [i.e., scope of work and/or drawings], delays to the project attributable to site and weather conditions, etc. None

VISITORS AND DISCUSSIONS: None

QUALITY CONTROL REPORT

MATERIALS DELIVERED TO JOB SITE

Quantity/Volume/ Weight	Description of Materials Received	Make/Model/Manufacturer	Material Lot Number	Inspection Performed By
None				

COMMENTS (acceptance status, inspection findings, etc.):

INSPECTIONS PERFORMED

Task/Activity Inspected	Inspection Performed	Findings
Pipe installation	visual inspection	OK

TESTS PERFORMED

Task/Activity Tested	Test Performed	Test Results (Pass/Fail) - Criteria
None		

QUALITY ISSUES AND RESOLUTIONS:

SUBMITTALS INSPECTION / REVIEW

Submittal No.	Submittal Description	Specification/Plan Reference	Submittal Approved?		Comment/Reason/Action
NA	Daily Report	–	Yes ☐	No ☐	Pending
NA	SBO	–	Yes ☐	No ☐	Pending
NA	PTSP	–	Yes ☐	No ☐	Pending

REGULATORY COMPLIANCE REPORT

PERMIT INSPECTIONS PERFORMED: None

WASTE ACCUMULATION/STOCKPILE AREA INSPECTION

Inspection Performed By:		Signature of Inspector:	
Accumulation / Stockpile Area Inspected:	NA		

No of Bins:		No of Tankers		No of Roll-Off Boxes:		No. of Tanks	

Inspection Results: NA

GENERAL COMMENTS

General Comments~ (rework, directives, etc.):

None

ATTACHMENTS

List of Attachments: (examples, as applicable: submittals, meeting minutes, safety meeting minutes, COCs, weight tickets, manifests, profiles, rework item list, RFIs, DCNs, photographs, etc.):

Photo log and safety documentation

NOTE: Write all entries legibly in ink. Line out all unused portions or designate as "not applicable". Preparer signs first and last name on each completed daily report. This form may be filled out electronically and signed electronically.

Alec Spill — PREPARER'S SIGNATURE

9NOV16 — DATE

Location: New Effluent Feed Pump Skid
Description: Newly Installed Pipe
Date: 09 November 2016 Direction: Northwest

EA Engineering, Science, and Technology, Inc.

DAILY SAFETY INSPECTION CHECKLIST (TO BE COMPLETED EACH DAY OF CONSTRUCTION OR HTRW SITE ACTIVITIES)

Site: BULK FUELS FACILITY EXPANSION
Location: KAFB BLDG 19150
Project No.: 62599DM01
Client: U.S. ARMY CORP OF ENGINEERS

Prepared by SSHO: JOHN CODE BACA
Project Manager: DEVON JERCINOVIC
Date : 11/9/18

Rating	Y	N	N/A	Comments/Immediate Corrective Action[1]
Accident Prevention Plan (APP) and Site Safety and Health Plan (SSHP) General Requirements				
Are there new onsite personnel? • Did they receive pre-entry briefing and are their names recorded in field logbook or daily log? • Was the USACE PM made aware of the new personnel. • Required training and medical surveillance documentation received (e.g., 40-hr, 8 hr, etc.)?	X X X	 X 	 	
Did personnel sign in/out of site?	X			
Daily tailgate safety meetings conducted and documented?	X			
Were new activities performed today? Were hazards identified, discussed during the daily safety tailgate, and incorporated into revised APP/SSHP?		X		
New materials brought on site? MSDSs available?		X		
Exclusion (EZ), Contamination Reduction (CRZ), and Support Zones (SZ) delineated and enforced?			X	
General housekeeping measures in place to prevent hazards?	X			
Emergency Planning				
Were there any changes to emergency contact names, telephone numbers, or hospital? If so, were site personnel made aware and was information distributed/reposted.		X		
Adequate safety equipment inventory available?	X			
Fire extinguisher available (monthly inspection of extinguisher will suffice)	X			
Eyewash station(s) functioning and in place (weekly inspection of eye wash station will suffice)?	X			
First aid supplies available (weekly inspection of first aid kit will suffice)?	X			
Communication equipment readily available for emergencies?	X			
Any reported accidents/incidents at this site? If so, were accident reporting procedures followed?			X	
Air Monitoring				
Monitoring equipment specified in SSHP available and in working order? Air monitoring instrumentation for this site includes – check each if required/on site, note deficiencies in comments: • Combustible gas meter • Organic vapor analyzer • Contaminant specific analyzer for benzene (if total organic vapor concentrations exceed 0.5 ppm)			X	
Monitoring equipment calibrated and calibration records			X	

Y = Satisfactory or Yes; N = Unsatisfactory or No, N/A = Not applicable

Rating	Y	N	N/A	Comments/Immediate Corrective Action[1]
available?			X	
Environmental and personnel monitoring performed as specified in SSHP?			X	
PPE				
Proper dermal protection worn by EA and subcontracted employees when handling/ contacting hazardous chemicals or contaminated environmental media?			X	
Required PPE (hard hats, safety boots / shoes, eye protection with side shields, hearing protection) being worn by EA and subcontracted employees?	X			
PPE inspection completed by SSHO?	X			
Drill Rig Operations				
Daily rig inspection completed? Any equipment problems?			X	
Drill rigs/elevated equipment maintaining minimum 10-ft distance from energized (50 kV) overhead power lines?			X	
Investigation-derived Waste (IDW)				
Wastes properly staged, secured, and labeled at end of day?			X	

Additional Comments:

John M. Col Baca
Site Safety and Health Officer's Signature

11/9/16
Date

[1]If a deficiency is noted that cannot be immediately corrected, the SSHO will monitor the progress in correcting the deficiency and will document following:

- Date the deficiency was identified
- Description of the deficiency
- Name of the person responsible for correcting the deficiency
- Projected date of correction
- Actual date of correction.

EA ENGINEERING, SCIENCE AND TECHNOLOGY, INC.
SAFETY MEETING REPORT

Date: 11/9/16	Time: 0800	Duration of meeting: 10 min	Project # 62599.0001
Location: KAFB Bldg 19150		Task: Pipe Install	

Type of meeting: X Daily ___ Weekly ___ Monthly ___ Other: _____

Items/Issues discussed:

1. Scope of Work
2. Muster Area
3. Stop Work Policy
4. F/A Kit Location
5. Eye Wash/FE Location
6. MSDS Location
7. PPE Requirements
8. Training Requirements
9. Inspection on Lifts
10. Inspection of PPE
11. Tie off during ladder use
12. Hand Tool Safety
13. LO/TO

Attach minutes of safety meeting if taken.

Safety questions/issues raised:	Actions/Follow-up needed:
1. None	
2.	
3.	
4.	
5.	
6.	

Remarks:
Electricians were onsite to conduct a Quantity of Material Estimate. Workers were given a overview of the above-mentioned items

Meeting conducted by:
John Coe Baca

HEALTH AND SAFETY ACTIVITY REPORT

Site: BULK FUELS FACILITY EXPANSION Location: KAFB BLDG 19150

Weather Cond.: CLEAR Onsite Hours: From 0645 To 1215

Changes in PPE Levels[1]	Work Operations	Reasons for Change
No Changes in PPE Levels !!		

Site Safety and Health Plan Violations	Corrective Action Specified	Corrective Action Taken [2](yes/no)
No Safety & HEALTH Violations		

Observations and Comments:
None!

Completed by: JOHN COEBACH Date: 11/9/16
Site Health and Safety Supervisor

[1]Only SSHO may change PPE levels, using only criteria specified in APP/SSHP.
[2]If a deficiency is noted that cannot be immediately corrected, the SSHO will monitor the progress in correcting the deficiency and will document following:

- Date the deficiency was identified
- Description of the deficiency
- Name of the person responsible for correcting the deficiency
- Projected date of correction
- Actual date of correction.

DAILY REPORT

(ATTACH ADDITIONAL SHEETS IF NECESSARY)

CONTRACT NAME:	Kirtland AFB Bulk Fuels Facility Expansion of Dissolved Plume GWTS Design	REPORT NO:	[redacted] 26 AR
CONTRACT NUMBER:	W912DR-12-D-0006	REPORT DATE:	10NOV16
REVISION NUMBER:	-	REVISION DATE:	-
TASK ORDER NUMBER:	DM01	PROJECT NAME / LOCATION:	KAFB, ABQ, NM
PROJECT NUMBER:	62599DM01	PROJECT DESCRIPTION:	KAFB GWTS Expansion
PROJECT MANAGER:	Devon Jercinovic	FIELD QUALITY MANAGER:	Alex Spiller
CONSTRUCTION MANAGER:	Luke Ries	SITE SAFETY MANAGER:	John Cole Baca

AM WEATHER:	Cool, partly cloudy, breezy	PM WEATHER:	Cool, mostly cloudy, light wind	MAX TEMP (F):	58°	

SUMMARY OF WORK PERFORMED TODAY

Installed unistrut brackets for conduit

HEALTH AND SAFETY REPORT

SAFETY ACTIONS TAKEN TODAY/SAFETY INSPECTIONS CONDUCTED (Include Observations, Safety Violations, Corrective Instructions Given, Corrective Actions Taken, and Results of Safety Inspections Conducted:

Visual observation of Safe work practices.

TAILGATE TOPICS: PPE, Training, housekeeping, equipment inspections, ladder use, fall protection, tool safety

SAFE BEHAVIOR OBSERVATIONS/SELF-ASSESSMENTS:

Safe behavior noted

OPERATIONS / PRODUCTION REPORT

WORK FORCE – CONTRACTOR AND SUBCONTRACTOR

Company	Cumulative Total of Work Hours From Previous Report	Total Hours Today	Total Work Hours From Start of Injection Event
Techsas	104	7	111
Wilson Electric	24	16	40

EQUIPMENT ON HAND

Description of Equipment	Make/Model/Manufacturer	Equipment ID Number	Inspection Performed By
Manlift	Genie GS-1930	10145036	Stephan Speess

COMMENTS (acceptance status, inspection findings, etc.):

OK

WORK AND/OR TESTS ACCOMPLISHED OR IN PROGRESS

Performed Work / Test for Today:

Installed unistrut brackets on effluent skid pump

Planned Work / Test for Tomorrow: Install racks and conduit for wiring

Planned Work / Test for Next Week: Install wiring, conduit, and brackets

CHANGED CONDITIONS/DELAY/CONFLICTS ENCOUNTERED (List any conflicts with the project [i.e., scope of work and/or drawings], delays to the project attributable to site and weather conditions, etc. No issues

VISITORS AND DISCUSSIONS: Trent Simple w/ approx 15 others

QUALITY CONTROL REPORT

MATERIALS DELIVERED TO JOB SITE

Quantity/Volume/ Weight	Description of Materials Received	Make/Model/Manufacturer	Material Lot Number	Inspection Performed By
80 ft	unistrut brackets			A Spilk
150 ft	Rigid conduit IMC			A Spilk

COMMENTS (acceptance status, inspection findings, etc.):

INSPECTIONS PERFORMED

Task/Activity Inspected	Inspection Performed	Findings
bracket installation	Visual inspection	OK

TESTS PERFORMED

Task/Activity Tested	Test Performed	Test Results (Pass/Fail) - Criteria
None		

QUALITY ISSUES AND RESOLUTIONS:

SUBMITTALS INSPECTION / REVIEW

Submittal No.	Submittal Description	Specification/Plan Reference	Submittal Approved?		Comment/Reason/Action
NA	Daily Report	–	Yes ☐	No ☐	Pending
NA	SBO	–	Yes ☐	No ☐	Pending
NA	PTSP	–	Yes ☐	No ☐	Pending

REGULATORY COMPLIANCE REPORT

PERMIT INSPECTIONS PERFORMED: None

WASTE ACCUMULATION/STOCKPILE AREA INSPECTION

Inspection Performed By:		Signature of Inspector:	
Accumulation / Stockpile Area Inspected:	NA		

No of Bins:		No of Tankers		No of Roll-Off Boxes:		No. of Tanks	

Inspection Results: NA

GENERAL COMMENTS

General Comments~ (rework, directives, etc.):

None

ATTACHMENTS

List of Attachments: (examples, as applicable: submittals, meeting minutes, safety meeting minutes, COCs, weight tickets, manifests, profiles, rework item list, RFIs, DCNs, photographs, etc.):

Photo Log and safety documentation -

NOTE: Write all entries legibly in ink. Line out all unused portions or designate as "not applicable". Preparer signs first and last name on each completed daily report. This form may be filled out electronically and signed electronically.

Alec Spill — PREPARER'S SIGNATURE

10 NOV 16 — DATE

Location: New Effluent Feed Pump Skid
Description: Newly Installed Brackets for Conduit
Date: 10 November 2016 Direction: West

EA Engineering, Science, and Technology, Inc.

DAILY SAFETY INSPECTION CHECKLIST (TO BE COMPLETED EACH DAY OF CONSTRUCTION OR HTRW SITE ACTIVITIES)

Site: BULK FUELS FACILITY EXPANSION
Location: KAFB BLDG 19150
Project No.: 62599DM01
Client: U.S. ARMY CORP OF ENGINEERS

Prepared by SSHO: JOHN CODE BACA
Project Manager: DEVON JERCINOVIC
Date: 11/10/16

Rating	Y	N	N/A	Comments/Immediate Corrective Action[1]
Accident Prevention Plan (APP) and Site Safety and Health Plan (SSHP) General Requirements				
Are there new onsite personnel? • Did they receive pre-entry briefing and are their names recorded in field logbook or daily log? • Was the USACE PM made aware of the new personnel. • Required training and medical surveillance documentation received (e.g., 40-hr, 8 hr, etc.)?	X X X	 X 	 	
Did personnel sign in/out of site?	X			
Daily tailgate safety meetings conducted and documented?	X			
Were new activities performed today? Were hazards identified, discussed during the daily safety tailgate, and incorporated into revised APP/SSHP?	X			
New materials brought on site? MSDSs available?		X		
Exclusion (EZ), Contamination Reduction (CRZ), and Support Zones (SZ) delineated and enforced?			X	
General housekeeping measures in place to prevent hazards?	X			
Emergency Planning				
Were there any changes to emergency contact names, telephone numbers, or hospital? If so, were site personnel made aware and was information distributed/reposted.		X		
Adequate safety equipment inventory available?	X			
Fire extinguisher available (monthly inspection of extinguisher will suffice)	X			
Eyewash station(s) functioning and in place (weekly inspection of eye wash station will suffice)?	X			
First aid supplies available (weekly inspection of first aid kit will suffice)?	X			
Communication equipment readily available for emergencies?	X			
Any reported accidents/incidents at this site? If so, were accident reporting procedures followed?			X	
Air Monitoring				
Monitoring equipment specified in SSHP available and in working order? Air monitoring instrumentation for this site includes – check each if required/on site, note deficiencies in comments: • Combustible gas meter • Organic vapor analyzer • Contaminant specific analyzer for benzene (if total organic vapor concentrations exceed 0.5 ppm)			X	
Monitoring equipment calibrated and calibration records			X	

Y = Satisfactory or Yes; N = Unsatisfactory or No, N/A = Not applicable

Rating	Y	N	N/A	Comments/Immediate Corrective Action[1]
available?			X	
Environmental and personnel monitoring performed as specified in SSHP?			X	
PPE				
Proper dermal protection worn by EA and subcontracted employees when handling/ contacting hazardous chemicals or contaminated environmental media?			X	
Required PPE (hard hats, safety boots / shoes, eye protection with side shields, hearing protection) being worn by EA and subcontracted employees?	X			
PPE inspection completed by SSHO?	X			
Drill Rig Operations				
Daily rig inspection completed? Any equipment problems?			X	
Drill rigs/elevated equipment maintaining minimum 10-ft distance from energized (50 kV) overhead power lines?			X	
Investigation-derived Waste (IDW)				
Wastes properly staged, secured, and labeled at end of day?			X	

Additional Comments:

SSHO WILL BE CHANGED FROM JOHN CDE BACA TO DANIEL CHAVEZ ON 11/11/16.

John M. Cde Baca
Site Safety and Health Officer's Signature

11/10/16
Date

[1]If a deficiency is noted that cannot be immediately corrected, the SSHO will monitor the progress in correcting the deficiency and will document following:

- Date the deficiency was identified
- Description of the deficiency
- Name of the person responsible for correcting the deficiency
- Projected date of correction
- Actual date of correction.

Y = Satisfactory or Yes; N = Unsatisfactory or No, N/A = Not applicable

EA ENGINEERING, SCIENCE AND TECHNOLOGY, INC.
SAFETY MEETING REPORT

Date: 11/10/16	Time: 0900	Duration of meeting: 15 min	Project # 62.5990.0101
Location: KAFB BLDG 19150		Task: INSTALLING UNISTRUT	

Type of meeting: X Daily ___ Weekly ___ Monthly ___ Other: _____

Items/Issues discussed:

1. SCOPE OF WORK
2. MUSTER AREA
3. STOP WORK POLICY
4. FIRST AID KIT
5. EYE WASH
6. DRINKING WATER
7. MSDS
8. PPE
9. TRAINING
10. HOUSEKEEPING
11. LADDER USE
12. FALL PROTECTION
13. HAND TOOLS

Attach minutes of safety meeting if taken.

Safety questions/issues raised:	Actions/Follow-up needed:
1. NONE!	
2.	
3.	
4.	
5.	
6.	

Remarks:

Meeting conducted by:

JOHN CODE BACA

HEALTH AND SAFETY ACTIVITY REPORT

Site: BULK FUELS FACILITY EXPANSION Location: KAFB BLDG 19150

Weather Cond.: CLOUDY Onsite Hours: From 0830 To 1400

Changes in PPE Levels[1]	Work Operations	Reasons for Change
No changes in PPE Level		

Site Safety and Health Plan Violations	Corrective Action Specified	Corrective Action Taken [2](yes/no)
NO VIOLATIONS!!!		

Observations and Comments:
NONE

Completed by: JOHN COE BACA Date: 11/10/16
Site Health and Safety Supervisor

[1]Only SSHO may change PPE levels, using only criteria specified in APP/SSHP.
[2]If a deficiency is noted that cannot be immediately corrected, the SSHO will monitor the progress in correcting the deficiency and will document following:

- Date the deficiency was identified
- Description of the deficiency
- Name of the person responsible for correcting the deficiency
- Projected date of correction
- Actual date of correction.

DAILY REPORT

(ATTACH ADDITIONAL SHEETS IF NECESSARY)

CONTRACT NAME:	Kirtland AFB Bulk Fuels Facility Expansion of Dissolved Plume GWTS Design	REPORT NO:	27
CONTRACT NUMBER:	W912DR-12-D-0006	REPORT DATE:	11NOV16
REVISION NUMBER:	-	REVISION DATE:	-
TASK ORDER NUMBER:	DM01	PROJECT NAME / LOCATION:	KAFB, ABQ, NM
PROJECT NUMBER:	62599DM01	PROJECT DESCRIPTION:	KAFB GWTS Expansion
PROJECT MANAGER:	Devon Jercinovic	FIELD QUALITY MANAGER:	~~Alex~~ Kevin McKeage
CONSTRUCTION MANAGER:	Luke Rief	SITE SAFETY MANAGER:	Alex Spiller

AM WEATHER:	Cool, Breezy, Mostly cloudy	PM WEATHER:	Cool, Partly Cloudy light wind	MAX TEMP (F):	62		

SUMMARY OF WORK PERFORMED TODAY

Install unistrut brackets and conduit

HEALTH AND SAFETY REPORT

SAFETY ACTIONS TAKEN TODAY/SAFETY INSPECTIONS CONDUCTED (Include Observations, Safety Violations, Corrective Instructions Given, Corrective Actions Taken, and Results of Safety Inspections Conducted:

Visual observation of safe work practices.

TAILGATE TOPICS: Housekeeping, lift safety, ladder safety, emergency procedures, emergency contacts, eyewash, overhead hazards

SAFE BEHAVIOR OBSERVATIONS/SELF-ASSESSMENTS:

Safe behavior noted

OPERATIONS / PRODUCTION REPORT

WORK FORCE – CONTRACTOR AND SUBCONTRACTOR

Company	Cumulative Total of Work Hours From Previous Report	Total Hours Today	Total Work Hours From Start of Injection Event
Techsas	111	~~118~~ 7	118
Wilson Electric	40	16	56

EQUIPMENT ON HAND

Description of Equipment	Make/Model/Manufacturer	Equipment ID Number	Inspection Performed By
Manlift	Genie GS-1930	10145036	Stephan Spiess

COMMENTS (acceptance status, inspection findings, etc.):

OK

WORK AND/OR TESTS ACCOMPLISHED OR IN PROGRESS

Performed Work / Test for Today:

Installed unistrut brackets and conduit

Planned Work / Test for Tomorrow:

No work planned for tomorrow.

Planned Work / Test for Next Week:

Install wiring, conduit, and remaining brackets

CHANGED CONDITIONS/DELAY/CONFLICTS ENCOUNTERED (List any conflicts with the project [i.e., scope of work and/or drawings], delays to the project attributable to site and weather conditions, etc. No issues

VISITORS AND DISCUSSIONS: None

QUALITY CONTROL REPORT

MATERIALS DELIVERED TO JOB SITE

Quantity/Volume/ Weight	Description of Materials Received	Make/Model/Manufacturer	Material Lot Number	Inspection Performed By
120 Ft	Unistrut brackets	Graybar A1200HS	772687586	A Spiller
150 ft	3/4" Rigid Conduit	Western Tube + Conduit		A Spiller
Various	Fasteners	Various		K McKeon

COMMENTS (acceptance status, inspection findings, etc.):

INSPECTIONS PERFORMED

Task/Activity Inspected	Inspection Performed	Findings
bracket installation	visual inspection	OK
conduit installation	visual inspection	OK.

TESTS PERFORMED

Task/Activity Tested	Test Performed	Test Results (Pass/Fail) - Criteria
None		

QUALITY ISSUES AND RESOLUTIONS: None

SUBMITTALS INSPECTION / REVIEW

Submittal No.	Submittal Description	Specification/Plan Reference	Submittal Approved?		Comment/Reason/Action
NA	Daily Report	–	Yes ☐	No ☐	Pending
NA	SBO	–	Yes ☐	No ☐	Pending
N-A	PTSP	–	Yes ☐	No ☐	Pending

REGULATORY COMPLIANCE REPORT

PERMIT INSPECTIONS PERFORMED: None

WASTE ACCUMULATION/STOCKPILE AREA INSPECTION

Inspection Performed By:		Signature of Inspector:	
Accumulation / Stockpile Area Inspected:	NA		

No of Bins:		No of Tankers		No of Roll-Off Boxes:		No. of Tanks	

Inspection Results: NA

GENERAL COMMENTS

General Comments~ (rework, directives, etc.):

None

ATTACHMENTS

List of Attachments: (examples, as applicable: submittals, meeting minutes, safety meeting minutes, COCs, weight tickets, manifests, profiles, rework item list, RFIs, DCNs, photographs, etc.):

Photo Log and Safety Documentation

NOTE: Write all entries legibly in ink. Line out all unused portions or designate as "not applicable". Preparer signs first and last name on each completed daily report. This form may be filled out electronically and signed electronically.

PREPARER'S SIGNATURE

11NOV16

DATE

Location: South of Driveway
Description: Conduit and Unistrut Brackets
Date: 11 November 2016 Direction: East

Location: Driveway
Description: Fasteners
Date: 11 November 2016 Direction: Down

Location: Newly Installed Influent Pump Skid
Description: Newly Installed Unistrut Brackets
Date: 11 November 2016 Direction: Northwest

Location: Above GAC Vessels
Description: Newly Installed Unistrut Brackets
Date: 11 November 2016 Direction: Up

Location: Above the Newly Installed GAC Vessels
Description: Newly Installed Unistrut Brackets
Date: 11 November 2016 Direction: East

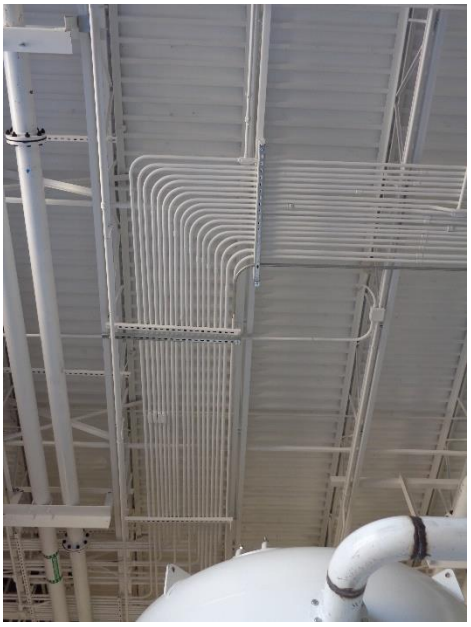

Location: Above the Newly Installed GAC Vessels
Description: Newly Installed Unistrut Brackets
Date: 11 November 2016 Direction: South

EA Engineering, Science, and Technology, Inc.

DAILY SAFETY INSPECTION CHECKLIST (TO BE COMPLETED EACH DAY OF CONSTRUCTION OR HTRW SITE ACTIVITIES)

Site: Bulk Fuels Facility
Location: KAFB Bldg 19156
Project No.: 625499DM01
Client: US Army Corp of Engineers

Prepared by SSHO: Alex Spilke
Project Manager: Devon Jeccinovic
Date: 11/11/16

Rating	Y	N	N/A	Comments/Immediate Corrective Action[1]
Accident Prevention Plan (APP) and Site Safety and Health Plan (SSHP) General Requirements				
Are there new onsite personnel? • Did they receive pre-entry briefing and are their names recorded in field logbook or daily log? • Was the USACE PM made aware of the new personnel. • Required training and medical surveillance documentation received (e.g., 40-hr, 8 hr, etc.)?	X X X	 X 	 	
Did personnel sign in/out of site?	X			
Daily tailgate safety meetings conducted and documented?	X			
Were new activities performed today? Were hazards identified, discussed during the daily safety tailgate, and incorporated into revised APP/SSHP?	X			
New materials brought on site? MSDSs available?		X		
Exclusion (EZ), Contamination Reduction (CRZ), and Support Zones (SZ) delineated and enforced?			X	
General housekeeping measures in place to prevent hazards?	X			
Emergency Planning				
Were there any changes to emergency contact names, telephone numbers, or hospital? If so, were site personnel made aware and was information distributed/reposted.		X		
Adequate safety equipment inventory available?	X			
Fire extinguisher available (monthly inspection of extinguisher will suffice)	X			
Eyewash station(s) functioning and in place (weekly inspection of eye wash station will suffice)?	X			
First aid supplies available (weekly inspection of first aid kit will suffice)?	X			
Communication equipment readily available for emergencies?	X			
Any reported accidents/incidents at this site? If so, were accident reporting procedures followed?			X	
Air Monitoring				
Monitoring equipment specified in SSHP available and in working order? Air monitoring instrumentation for this site includes – check each if required/on site, note deficiencies in comments: • Combustible gas meter • Organic vapor analyzer • Contaminant specific analyzer for benzene (if total organic vapor concentrations exceed 0.5 ppm)			X	
Monitoring equipment calibrated and calibration records			X	

Y = Satisfactory or Yes; N = Unsatisfactory or No, N/A = Not applicable

Rating	Y	N	N/A	Comments/Immediate Corrective Action[1]
available?			X	
Environmental and personnel monitoring performed as specified in SSHP?			X	
PPE				
Proper dermal protection worn by EA and subcontracted employees when handling/ contacting hazardous chemicals or contaminated environmental media?			X	
Required PPE (hard hats, safety boots / shoes, eye protection with side shields, hearing protection) being worn by EA and subcontracted employees?	X			
PPE inspection completed by SSHO?	X			
Drill Rig Operations				
Daily rig inspection completed? Any equipment problems?			X	
Drill rigs/elevated equipment maintaining minimum 10-ft distance from energized (50 kV) overhead power lines?			X	
Investigation-derived Waste (IDW)				
Wastes properly staged, secured, and labeled at end of day?			X	

Additional Comments:

SSHO will be changed to Daniel Chavez on 14NOV16.

Alex Spill
Site Safety and Health Officer's Signature

11NOV16
Date

[1]If a deficiency is noted that cannot be immediately corrected, the SSHO will monitor the progress in correcting the deficiency and will document following:

- Date the deficiency was identified
- Description of the deficiency
- Name of the person responsible for correcting the deficiency
- Projected date of correction
- Actual date of correction.

Y = Satisfactory or Yes; N = Unsatisfactory or No, N/A = Not applicable

EA ENGINEERING, SCIENCE AND TECHNOLOGY, INC.
SAFETY MEETING REPORT

Date: 11NOV16	Time: 0700	Duration of meeting: 5 min	Project # 62899DM01
Location: KAFB Bldg 19150		Task: Install unistrut brackets and conduit	

Type of meeting: X Daily ___ Weekly ___ Monthly ___ Other: _____

Items/Issues discussed:

1. Scope of Work
2. Emergency Procedures
3. List safety
4. PPE
5. Fall Protection

Attach minutes of safety meeting if taken.

Safety questions/issues raised:	Actions/Follow-up needed:
1. None	
2.	
3.	
4.	
5.	
6.	

Remarks:

Meeting conducted by:

Alex Spiller

HEALTH AND SAFETY ACTIVITY REPORT

Site: Bulk Fuels Facility GWTS Location: KAFB BLDG 19150

Weather Cond.: Partly Cloudy, Cool Onsite Hours: From 0700 To ~~0800~~ 1500

Changes in PPE Levels[1]	Work Operations	Reasons for Change
None		

Site Safety and Health Plan Violations	Corrective Action Specified	Corrective Action Taken [2](yes/no)
No violations		

Observations and Comments:

None

Completed by: Alex Spill Date: 11 NOV 16

Site Health and Safety Supervisor

[1]Only SSHO may change PPE levels, using only criteria specified in APP/SSHP.

[2]If a deficiency is noted that cannot be immediately corrected, the SSHO will monitor the progress in correcting the deficiency and will document following:

- Date the deficiency was identified
- Description of the deficiency
- Name of the person responsible for correcting the deficiency
- Projected date of correction
- Actual date of correction.

DAILY REPORT

(ATTACH ADDITIONAL SHEETS IF NECESSARY)

CONTRACT NAME:	Kirtland AFB Bulk Fuels Facility Expansion of Dissolved Plume GWTS Design	REPORT NO:	28
CONTRACT NUMBER:	W912DR-12-D-0006	REPORT DATE:	14NOV16
REVISION NUMBER:	-	REVISION DATE:	-
TASK ORDER NUMBER:	DM01	PROJECT NAME / LOCATION:	KAFB, ABQ, NM
PROJECT NUMBER:	62599DM01	PROJECT DESCRIPTION:	KAFB GWTS Expansio –
PROJECT MANAGER:	Devon Jercinovic	FIELD QUALITY MANAGER:	Kevine Mckeag
CONSTRUCTION MANAGER:	Alex Spiller	SITE SAFETY MANAGER:	Danel Chavez

AM WEATHER:	cool, hazey, breezy	PM WEATHER:	Calm, cool Hazey	MAX TEMP (F):	67°		

SUMMARY OF WORK PERFORMED TODAY

Conduit and unistrut brackets installed

HEALTH AND SAFETY REPORT

SAFETY ACTIONS TAKEN TODAY/SAFETY INSPECTIONS CONDUCTED (Include Observations, Safety Violations, Corrective Instructions Given, Corrective Actions Taken, and Results of Safety Inspections Conducted:

TAILGATE TOPICS: overhead safety, slips/trips/falls, muster area, safety equipment, lanyard safety, PPE requirements

SAFE BEHAVIOR OBSERVATIONS/SELF-ASSESSMENTS:

Safe behavior observed

OPERATIONS / PRODUCTION REPORT

WORK FORCE – CONTRACTOR AND SUBCONTRACTOR

Company	Cumulative Total of Work Hours From Previous Report	Total Hours Today	Total Work Hours From Start of Injection Event
Techsas	118	8	126
Wilson Electric	56	22	78

EQUIPMENT ON HAND

Description of Equipment	Make/Model/Manufacturer	Equipment ID Number	Inspection Performed By
Manlift	Genie GS-1930	10145036	Stephan Spiess

COMMENTS (acceptance status, inspection findings, etc.):

OK

WORK AND/OR TESTS ACCOMPLISHED OR IN PROGRESS

Performed Work / Test for Today:

unistruts and conduit were installed

Planned Work / Test for Tomorrow: Install conduit and brackets, update code, install electronics

Planned Work / Test for Next Week:

Nothing planned for next week

CHANGED CONDITIONS/DELAY/CONFLICTS ENCOUNTERED (List any conflicts with the project [i.e., scope of work and/or drawings], delays to the project attributable to site and weather conditions, etc.

VISITORS AND DISCUSSIONS: Amy Sanchez, reviewed mod 6 components, All ~~OK~~ installed OK

QUALITY CONTROL REPORT

MATERIALS DELIVERED TO JOB SITE

Quantity/Volume/ Weight	Description of Materials Received	Make/Model/Manufacturer	Material Lot Number	Inspection Performed By
100ft	Unistrut brackets H-132	Graybar AR00H	–	ASpilk
350ft	1" Rgd. Conduit	Western tube and conduit	–	ASpilk
200 ft	3/4" Rig Conduit	Western tube & conduit	–	ASpilk
60Ft	1" EMT Conduit	–	–	ASpilk

COMMENTS (acceptance status, inspection findings, etc.): OK, see attached for additional items delivered

INSPECTIONS PERFORMED

Task/Activity Inspected	Inspection Performed	Findings
Conduit installation	~~A Spilk~~ visual inspection	OK
Bracket installation	~~A Spilk~~ visual inspection	OK

TESTS PERFORMED

Task/Activity Tested	Test Performed	Test Results (Pass/Fail) - Criteria
~~via installation~~	~~visual inspection~~	~~OK~~

QUALITY ISSUES AND RESOLUTIONS:

SUBMITTALS INSPECTION / REVIEW

Submittal No.	Submittal Description	Specification/Plan Reference	Submittal Approved?		Comment/Reason/Action
NA	Daily Report	–	Yes ☐	No ☐	Pending
NA	SBO	–	Yes ☐	No ☐	Pending
NA	PTSP	–	Yes ☐	No ☐	Pending

REGULATORY COMPLIANCE REPORT

PERMIT INSPECTIONS PERFORMED: None

WASTE ACCUMULATION/STOCKPILE AREA INSPECTION

Inspection Performed By:		Signature of Inspector:	
Accumulation / Stockpile Area Inspected:	NA		

No of Bins:		No of Tankers		No of Roll-Off Boxes:		No. of Tanks	

Inspection Results: NA

GENERAL COMMENTS

General Comments~ (rework, directives, etc.):

None

ATTACHMENTS

List of Attachments: (examples, as applicable: submittals, meeting minutes, safety meeting minutes, COCs, weight tickets, manifests, profiles, rework item list, RFIs, DCNs, photographs, etc.):

Photo log, safety documentation, and additional items delivered

NOTE: Write all entries legibly in ink. Line out all unused portions or designate as "not applicable". Preparer signs first and last name on each completed daily report. This form may be filled out electronically and signed electronically.

Alec Spill — PREPARER'S SIGNATURE

14NOV16 — DATE

Items Delivered (continued from daily report)

Qty	Item	Inspector
14	¾” 90° angled conduit	ASpiller
7	1” 90° angled conduit	ASpiller
Many	Various fittings	ASpiller

Location: South of Driveway
Description: Newly Delivered Conduit and Unistrut Brackets
Date: 14 November 2016 Direction: West

Location: South of Driveway
Description: Newly Delivered Fittings
Date: 14 November 2016 Direction: Down

Location: South of Driveway
Description: Newly Delivered Conduit Elbows
Date: 14 November 2016 Direction: Down

Location: South of Driveway
Description: Newly Delivered Fasteners and Fittings
Date: 14 November 2016 Direction: Down

Location: Newly Installed Influent Tank
Description: Newly Installed Unistrut Bracket
Date: 14 November 2016 Direction: Northwest

Location: Newly Installed Effluent Tank
Description: Newly Installed Unistrut Bracket
Date: 14 November 2016 Direction: Northwest

Location: Newly Installed GAC Vessel
Description: Newly Installed Unistrut Bracket
Date: 14 November 2016 Direction: Southeast

Location: Ceiling Above Newly Installed GAC Vessels
Description: Newly Installed Conduit
Date: 14 November 2016 Direction: West

Location: Ceiling Above Effluent Pump Skid
Description: Newly Installed Conduit
Date: 14 November 2016 Direction: Up

Location: Newly Installed Effluent Pump Skid
Description: Newly Installed Conduit
Date: 14 November 2016 Direction: Northwest

EA Engineering, Science, and Technology, Inc.

DAILY SAFETY INSPECTION CHECKLIST (TO BE COMPLETED EACH DAY OF CONSTRUCTION OR HTRW SITE ACTIVITIES)

Site: Bulk Fuels Facility Expan
Location: KAFB Bldg 19150
Project No.: 625990DM01
Client: US Army Corp of Engineers

Prepared by SSHO: Daniel Chavez
Project Manager: Devon Jerconovic
Date: 11-14-16

Rating	Y	N	N/A	Comments/Immediate Corrective Action[1]
Accident Prevention Plan (APP) and Site Safety and Health Plan (SSHP) General Requirements				
Are there new onsite personnel? • Did they receive pre-entry briefing and are their names recorded in field logbook or daily log? • Was the USACE PM made aware of the new personnel. • Required training and medical surveillance documentation received (e.g., 40-hr, 8 hr, etc.)?	X X[DC]	X		
Did personnel sign in/out of site?	X			
Daily tailgate safety meetings conducted and documented?	X			
Were new activities performed today? Were hazards identified, discussed during the daily safety tailgate, and incorporated into revised APP/SSHP?	X			
New materials brought on site? MSDSs available?		X		
Exclusion (EZ), Contamination Reduction (CRZ), and Support Zones (SZ) delineated and enforced?			X	
General housekeeping measures in place to prevent hazards?	X			
Emergency Planning				
Were there any changes to emergency contact names, telephone numbers, or hospital? If so, were site personnel made aware and was information distributed/reposted.	X			
Adequate safety equipment inventory available?		X		Earplugs ran out but Alex had more
Fire extinguisher available (monthly inspection of extinguisher will suffice)	X			
Eyewash station(s) functioning and in place (weekly inspection of eye wash station will suffice)?	X			
First aid supplies available (weekly inspection of first aid kit will suffice)?	X			
Communication equipment readily available for emergencies?	X			
Any reported accidents/incidents at this site? If so, were accident reporting procedures followed?				
Air Monitoring				
Monitoring equipment specified in SSHP available and in working order? Air monitoring instrumentation for this site includes – check each if required/on site, note deficiencies in comments: • Combustible gas meter • Organic vapor analyzer • Contaminant specific analyzer for benzene (if total organic vapor concentrations exceed 0.5 ppm)			X	
Monitoring equipment calibrated and calibration records			X	

Y = Satisfactory or Yes; N = Unsatisfactory or No, N/A = Not applicable

Rating	Y	N	N/A	Comments/Immediate Corrective Action[1]
available?			X	
Environmental and personnel monitoring performed as specified in SSHP?			X	
PPE				
Proper dermal protection worn by EA and subcontracted employees when handling/ contacting hazardous chemicals or contaminated environmental media?	X			
Required PPE (hard hats, safety boots / shoes, eye protection with side shields, hearing protection) being worn by EA and subcontracted employees?	X			
PPE inspection completed by SSHO?	X			
Drill Rig Operations				
Daily rig inspection completed? Any equipment problems?			X	
Drill rigs/elevated equipment maintaining minimum 10-ft distance from energized (50 kV) overhead power lines?			X	
Investigation-derived Waste (IDW)				
Wastes properly staged, secured, and labeled at end of day?			X	
Additional Comments:				

Site Safety and Health Officer's Signature

11-14-16
Date

[1]If a deficiency is noted that cannot be immediately corrected, the SSHO will monitor the progress in correcting the deficiency and will document following:

- Date the deficiency was identified
- Description of the deficiency
- Name of the person responsible for correcting the deficiency
- Projected date of correction
- Actual date of correction.

Y = Satisfactory or Yes; N = Unsatisfactory or No, N/A = Not applicable

EA ENGINEERING, SCIENCE AND TECHNOLOGY, INC.
SAFETY MEETING REPORT

Date: 11-14-16	Time: 0800	Duration of meeting:	Project # 62599 DM01
Location:		Task: Installing UNISTRUT & Running Conduit	

Type of meeting: X Daily ___Weekly ___ Monthly ___ Other:_____

Items/Issues discussed:

1. Scope of work
2. Muster Area
3. Stop Work Policy
4. First Aid Kit
5. Eye Wash
6. Drinking Water
7. SDS
8. PPE
9. Training
10. House Keeping
11. Ladder use
12. Fall Protection
13. Hand Tools

Attach minutes of safety meeting if taken.

Safety questions/issues raised:	Actions/Follow-up needed:
1. None	
2.	
3.	
4.	
5.	
6.	

Remarks:

Meeting conducted by:

Daniel Chavez

HEALTH AND SAFETY ACTIVITY REPORT

Site: Bulk Fuels Facility Expansion Location: KAFB Bldg 19150

Weather Cond.: Clear & sunny Onsite Hours: From 0800 To _____

Changes in PPE Levels[1]	Work Operations	Reasons for Change
NO Changes		

Site Safety and Health Plan Violations	Corrective Action Specified	Corrective Action Taken [2](yes/no)
NO Violations		

Observations and Comments:

None

Completed by: Daniel Chavez Date: 11-14-16
Site Health and Safety Supervisor

[1]Only SSHO may change PPE levels, using only criteria specified in APP/SSHP.
[2]If a deficiency is noted that cannot be immediately corrected, the SSHO will monitor the progress in correcting the deficiency and will document following:

- Date the deficiency was identified
- Description of the deficiency
- Name of the person responsible for correcting the deficiency
- Projected date of correction
- Actual date of correction.

DAILY REPORT

(ATTACH ADDITIONAL SHEETS IF NECESSARY)

CONTRACT NAME:	Kirtland AFB Bulk Fuels Facility Expansion of Dissolved Plume GWTS Design	REPORT NO:	29
CONTRACT NUMBER:	W912DR-12-D-0006	REPORT DATE:	15Nov16
REVISION NUMBER:	-	REVISION DATE:	-
TASK ORDER NUMBER:	DM01	PROJECT NAME / LOCATION:	KAFB, ABQ, NM
PROJECT NUMBER:	62599DM01	PROJECT DESCRIPTION:	KAFB GWTS Expansion
PROJECT MANAGER:	Devon Jercinovic	FIELD QUALITY MANAGER:	Alex Spill
CONSTRUCTION MANAGER:	Alex Spill	SITE SAFETY MANAGER:	Daniel Chavez / Pete Fortani

AM WEATHER:	cool, hazey breezy	PM WEATHER:	warm, calm clear	MAX TEMP (F):	68°		

SUMMARY OF WORK PERFORMED TODAY

Install conduit, brackets, ~~electronics and program upgrades~~ ✱

HEALTH AND SAFETY REPORT

SAFETY ACTIONS TAKEN TODAY/SAFETY INSPECTIONS CONDUCTED (Include Observations, Safety Violations, Corrective Instructions Given, Corrective Actions Taken, and Results of Safety Inspections Conducted:

TAILGATE TOPICS: Lift safety, Avoiding work under lifts, etc.

SAFE BEHAVIOR OBSERVATIONS/SELF-ASSESSMENTS:

OPERATIONS / PRODUCTION REPORT

WORK FORCE – CONTRACTOR AND SUBCONTRACTOR

Company	Cumulative Total of Work Hours From Previous Report	Total Hours Today	Total Work Hours From Start of Injection Event
Techsas	126	8	134
Wilson Electric	78	15	93
I+C solutions	12	0	12

EQUIPMENT ON HAND

Description of Equipment	Make/Model/Manufacturer	Equipment ID Number	Inspection Performed By
Man lift	Genie GS-1930	10145036	Stephan Spiess

COMMENTS (acceptance status, inspection findings, etc.):

OK

WORK AND/OR TESTS ACCOMPLISHED OR IN PROGRESS

Performed Work / Test for Today:

Install conduit and brackets

Planned Work / Test for Tomorrow: Install conduit + brackets. Install electronics and program HMI

Planned Work / Test for Next Week: None

CHANGED CONDITIONS/DELAY/CONFLICTS ENCOUNTERED (List any conflicts with the project [i.e., scope of work and/or drawings], delays to the project attributable to site and weather conditions, etc. I+C solutions arrived onsite w/o proper PPE and were sent home

VISITORS AND DISCUSSIONS:
Trent Simpler arrived and discussed possibility of leak detection on effluent.

QUALITY CONTROL REPORT

MATERIALS DELIVERED TO JOB SITE

Quantity/Volume/ Weight	Description of Materials Received	Make/Model/Manufacturer	Material Lot Number	Inspection Performed By
None				

COMMENTS (acceptance status, inspection findings, etc.):
NA

INSPECTIONS PERFORMED

Task/Activity Inspected	Inspection Performed	Findings
Conduit installation	Visual Inspection	OK

TESTS PERFORMED

Task/Activity Tested	Test Performed	Test Results (Pass/Fail) - Criteria
None		

QUALITY ISSUES AND RESOLUTIONS: None

SUBMITTALS INSPECTION / REVIEW

Submittal No.	Submittal Description	Specification/Plan Reference	Submittal Approved?		Comment/Reason/Action
NA	Daily Report	–	Yes ☐	No ☐	Pending
NA	SBO	–	Yes ☐	No ☐	Pending
NA	PTSP	–	Yes ☐	No ☐	Pending

REGULATORY COMPLIANCE REPORT

PERMIT INSPECTIONS PERFORMED: None

WASTE ACCUMULATION/STOCKPILE AREA INSPECTION

Inspection Performed By:				Signature of Inspector:			
Accumulation / Stockpile Area Inspected:	NA						
No of Bins:		No of Tankers		No of Roll-Off Boxes:		No. of Tanks	

Inspection Results: NA

GENERAL COMMENTS

General Comments~ (rework, directives, etc.): None
ATTACHMENTS
List of Attachments: (examples, as applicable: submittals, meeting minutes, safety meeting minutes, COCs, weight tickets, manifests, profiles, rework item list, RFIs, DCNs, photographs, etc.): Photo log and safety documentation
NOTE: Write all entries legibly in ink. Line out all unused portions or designate as "not applicable". Preparer signs first and last name on each completed daily report. This form may be filled out electronically and signed electronically. Alex Spill (PREPARER'S SIGNATURE) 15/NOV/16 (DATE)

Location: Northwest Quadrant of GWTS
Description: Newly Installed Conduit and Unistrut Brackets
Date: 15 November 2016 Direction: North

Location: Ceiling Near Center of GWTS
Description: Newly Installed Overhead Brackets
Date: 15 November 2016 Direction: Up

Location: At Newly Installed Effluent Tank
Description: Newly Installed Unistrut Bracket and Conduit
Date: 15 November 2016 Direction: Northwest

Location: At Newly Installed Influent Tank
Description: Newly Installed Unistrut Bracket and Conduit
Date: 15 November 2016 Direction: North

EA Engineering, Science, and Technology, Inc.

DAILY SAFETY INSPECTION CHECKLIST
(TO BE COMPLETED EACH DAY OF CONSTRUCTION OR HTRW SITE ACTIVITIES)

Site: Bulk Fuels Facility Expan
Location: KAFB Bldg 19150
Project No.: 62599DDMO1
Client: U.S. Army Corp of Eng

Prepared by SSHO: Daniel Chavez
Project Manager: Devon Jercinovic
Date: 11-15-16

Rating	Y	N	N/A	Comments/Immediate Corrective Action[1]
Accident Prevention Plan (APP) and Site Safety and Health Plan (SSHP) General Requirements				
Are there new onsite personnel? • Did they receive pre-entry briefing and are their names recorded in field logbook or daily log? • Was the USACE PM made aware of the new personnel. • Required training and medical surveillance documentation received (e.g., 40-hr, 8 hr, etc.)?		X	X X X	
Did personnel sign in/out of site?	X			
Daily tailgate safety meetings conducted and documented?	X			
Were new activities performed today? Were hazards identified, discussed during the daily safety tailgate, and incorporated into revised APP/SSHP?		X		
New materials brought on site? MSDSs available?		X		
Exclusion (EZ), Contamination Reduction (CRZ), and Support Zones (SZ) delineated and enforced?			X	
General housekeeping measures in place to prevent hazards?	X			
Emergency Planning				
Were there any changes to emergency contact names, telephone numbers, or hospital? If so, were site personnel made aware and was information distributed/reposted.		X		
Adequate safety equipment inventory available?	X			
Fire extinguisher available (monthly inspection of extinguisher will suffice)	X			
Eyewash station(s) functioning and in place (weekly inspection of eye wash station will suffice)?	X			
First aid supplies available (weekly inspection of first aid kit will suffice)?	X			
Communication equipment readily available for emergencies?	X			
Any reported accidents/incidents at this site? If so, were accident reporting procedures followed?				
Air Monitoring				
Monitoring equipment specified in SSHP available and in working order? Air monitoring instrumentation for this site includes – check each if required/on site, note deficiencies in comments: • Combustible gas meter • Organic vapor analyzer • Contaminant specific analyzer for benzene (if total organic vapor concentrations exceed 0.5 ppm)			X	
Monitoring equipment calibrated and calibration records			X	

Y = Satisfactory or Yes; N = Unsatisfactory or No, N/A = Not applicable

Rating	Y	N	N/A	Comments/Immediate Corrective Action[1]
available?			X	
Environmental and personnel monitoring performed as specified in SSHP?			X	
PPE				
Proper dermal protection worn by EA and subcontracted employees when handling/ contacting hazardous chemicals or contaminated environmental media?	X			
Required PPE (hard hats, safety boots / shoes, eye protection with side shields, hearing protection) being worn by EA and subcontracted employees?	X			
PPE inspection completed by SSHO?	X			
Drill Rig Operations				
Daily rig inspection completed? Any equipment problems?			X	
Drill rigs/elevated equipment maintaining minimum 10-ft distance from energized (50 kV) overhead power lines?			X	
Investigation-derived Waste (IDW)				
Wastes properly staged, secured, and labeled at end of day?			X	

Additional Comments:

Site Safety and Health Officer's Signature

11-15-16
Date

[1]If a deficiency is noted that cannot be immediately corrected, the SSHO will monitor the progress in correcting the deficiency and will document following:

- Date the deficiency was identified
- Description of the deficiency
- Name of the person responsible for correcting the deficiency
- Projected date of correction
- Actual date of correction.

HEALTH AND SAFETY ACTIVITY REPORT

Site: Bulk Fuels Facility Expansion Location: KAFB Bldg 19150

Weather Cond.: Clear + Sunny Onsite Hours: From 0800 To _____

Changes in PPE Levels[1]	Work Operations	Reasons for Change
No Changes		

Site Safety and Health Plan Violations	Corrective Action Specified	Corrective Action Taken[2] (yes/no)
No Violations		

Observations and Comments:

None

Completed by: _____ Date: 11-15-16

Site Health and Safety Supervisor

[1]Only SSHO may change PPE levels, using only criteria specified in APP/SSHP.

[2]If a deficiency is noted that cannot be immediately corrected, the SSHO will monitor the progress in correcting the deficiency and will document following:

- Date the deficiency was identified
- Description of the deficiency
- Name of the person responsible for correcting the deficiency
- Projected date of correction
- Actual date of correction.

EA ENGINEERING, SCIENCE AND TECHNOLOGY, INC.
SAFETY MEETING REPORT

Date: 11-15-16	Time: 0800	Duration of meeting: 10 Min	Project # 62599DM01
Location: KAFB Bldg 19150		Task: Installing hangers and Conduit	

Type of meeting: X Daily ___ Weekly ___ Monthly ___ Other: _____

Items/Issues discussed:

1. Overhead work
2. Equipment Inspection
3. Tools Falling From Lift
4. Stop the Job
5.

Attach minutes of safety meeting if taken.

Safety questions/issues raised:	Actions/Follow-up needed:
1. None	
2.	
3.	
4.	
5.	
6.	

Remarks:

Meeting conducted by:

Daniel Chavez

DAILY REPORT

(ATTACH ADDITIONAL SHEETS IF NECESSARY)

CONTRACT NAME:	Kirtland AFB Bulk Fuels Facility Expansion of Dissolved Plume GWTS Design	REPORT NO:	30
CONTRACT NUMBER:	W912DR-12-D-0006	REPORT DATE:	16 NOV 16
REVISION NUMBER:	-	REVISION DATE:	-
TASK ORDER NUMBER:	DM01	PROJECT NAME / LOCATION:	KAFB, ABQ, NM
PROJECT NUMBER:	62599DM01	PROJECT DESCRIPTION:	KAFB GWTS Expansion
PROJECT MANAGER:	Devon Jercinovic	FIELD QUALITY MANAGER:	Kevin McKeage
CONSTRUCTION MANAGER:	Alex Spiller	SITE SAFETY MANAGER:	Daniel Chavez

AM WEATHER:	cool, breezy, partly cloudy	PM WEATHER:	Cool, breezy Mostly Cloudy	MAX TEMP (F):	67		

SUMMARY OF WORK PERFORMED TODAY

Install conduit and brackets. Installed PLC and programming upgrade.

HEALTH AND SAFETY REPORT

SAFETY ACTIONS TAKEN TODAY/SAFETY INSPECTIONS CONDUCTED (Include Observations, Safety Violations, Corrective Instructions Given, Corrective Actions Taken, and Results of Safety Inspections Conducted: Muster area, overhead safety, tool safety, safety equipment and procedures

TAILGATE TOPICS:

Work to be performed today, muster area, stop work policy, first aid kit locations, etc

SAFE BEHAVIOR OBSERVATIONS/SELF-ASSESSMENTS:

Safe behavior noted

OPERATIONS / PRODUCTION REPORT

WORK FORCE – CONTRACTOR AND SUBCONTRACTOR

Company	Cumulative Total of Work Hours From Previous Report	Total Hours Today	Total Work Hours From Start of Injection Event
Techsas	~~126~~ 134	8	142
Wilson Electric	93	16	109
I+C Solutions	12	10	22

EQUIPMENT ON HAND

Description of Equipment	Make/Model/Manufacturer	Equipment ID Number	Inspection Performed By
Man lift	Genie GS-1930	10145036	Stephan Spiess

COMMENTS (acceptance status, inspection findings, etc.):

OK

WORK AND/OR TESTS ACCOMPLISHED OR IN PROGRESS

Performed Work / Test for Today:

Installed conduit and brackets. Installed PLC and programming upgrade tested the operation of the PLC w/new programming.

Planned Work / Test for Tomorrow:

Install conduit and brackets. Troubleshoot PLC and Programming

Planned Work / Test for Next Week:

None

CHANGED CONDITIONS/DELAY/CONFLICTS ENCOUNTERED (List any conflicts with the project [i.e., scope of work and/or drawings], delays to the project attributable to site and weather conditions, etc. No issues

VISITORS AND DISCUSSIONS: None

QUALITY CONTROL REPORT

MATERIALS DELIVERED TO JOB SITE

Quantity/Volume/ Weight	Description of Materials Received	Make/Model/Manufacturer	Material Lot Number	Inspection Performed By
None				

COMMENTS (acceptance status, inspection findings, etc.): NA

INSPECTIONS PERFORMED

Task/Activity Inspected	Inspection Performed	Findings
PLC and Programming	Visual Inspection	OK
Conduit and brackets	Visual Inspection	OK

TESTS PERFORMED

Task/Activity Tested	Test Performed	Test Results (Pass/Fail) - Criteria
PLC and Programming	Operational Test	Failed - Operates Normally

QUALITY ISSUES AND RESOLUTIONS: ~~None~~ Trouble shooting of the PLC and Programming to occur tomorrow.

SUBMITTALS INSPECTION / REVIEW

Submittal No.	Submittal Description	Specification/Plan Reference	Submittal Approved?		Comment/Reason/Action
NA	Daily Report	–	Yes ☐	No ☐	Pending
NA	SBO	–	Yes ☐	No ☐	Pending
NA	PTSP	–	Yes ☐	No ☐	Pending

REGULATORY COMPLIANCE REPORT

PERMIT INSPECTIONS PERFORMED: None

WASTE ACCUMULATION/STOCKPILE AREA INSPECTION

Inspection Performed By:	NA	Signature of Inspector:			
Accumulation / Stockpile Area Inspected:					
No of Bins:		No of Tankers		No of Roll-Off Boxes:		No. of Tanks	

Inspection Results: NA

GENERAL COMMENTS

General Comments~ (rework, directives, etc.):

None

ATTACHMENTS

List of Attachments: (examples, as applicable: submittals, meeting minutes, safety meeting minutes, COCs, weight tickets, manifests, profiles, rework item list, RFIs, DCNs, photographs, etc.):

Photo log and Safety Documentation

NOTE: Write all entries legibly in ink. Line out all unused portions or designate as "not applicable". Preparer signs first and last name on each completed daily report. This form may be filled out electronically and signed electronically.

PREPARER'S SIGNATURE

16NOV16

DATE

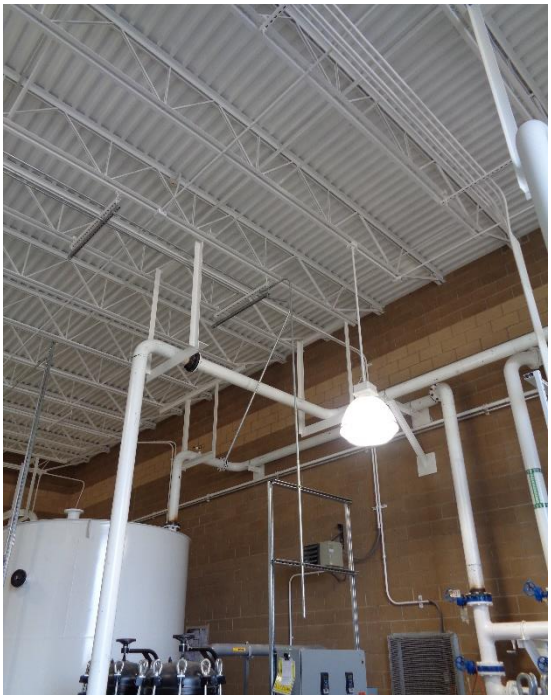

Location: Above Newly Installed Influent Pump Skid
Description: Newly Installed Conduit
Date: 16 November 2016 Direction: Northwest

Location: Ceiling Near Center of GWTS
Description: Newly Installed Conduit
Date: 16 November 2016 Direction: Up

Location: Above Newly Installed Effluent Pump Skid
Description: Newly Installed Conduit
Date: 16 November 2016 Direction: West

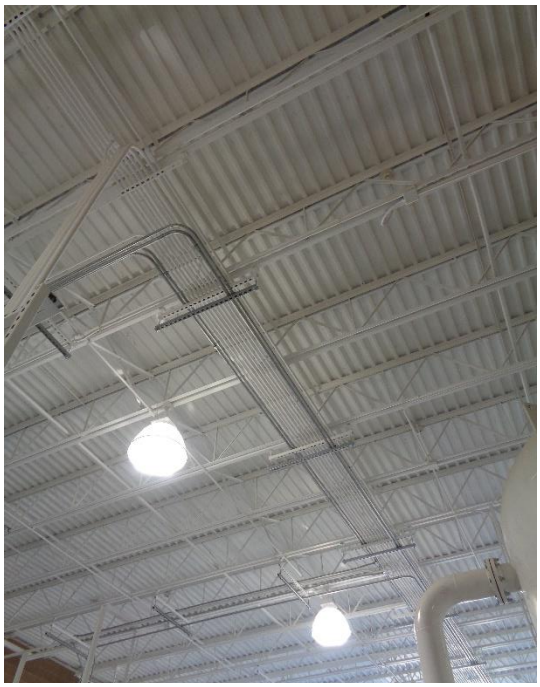

Location: Ceiling Near Center of GWTS
Description: Newly Installed Conduit
Date: 16 November 2016 Direction: Up

Location: Well Control House
Description: Newly Installed PLC
Date: 16 November 2016 Direction: South

Location: Well KAFB-7
Description: Newly Installed PLC
Date: 16 November 2016 Direction: South

EA Engineering, Science, and Technology, Inc.

DAILY SAFETY INSPECTION CHECKLIST (TO BE COMPLETED EACH DAY OF CONSTRUCTION OR HTRW SITE ACTIVITIES)

Site: Bulk Fuels Facility Expan
Location: KAFB Bldg 19150
Project No.: 625990 DM01
Client: U.S. Army Corp of Eng

Prepared by SSHO: Daniel Chavez
Project Manager: Devon Jerciauic
Date: 11-16-16

Rating	Y	N	N/A	Comments/Immediate Corrective Action[1]
Accident Prevention Plan (APP) and Site Safety and Health Plan (SSHP) General Requirements				
Are there new onsite personnel? • Did they receive pre-entry briefing and are their names recorded in field logbook or daily log? • Was the USACE PM made aware of the new personnel. • Required training and medical surveillance documentation received (e.g., 40-hr, 8 hr, etc.)?	X X X	 X 	 	
Did personnel sign in/out of site?	X			
Daily tailgate safety meetings conducted and documented?	X			
Were new activities performed today? Were hazards identified, discussed during the daily safety tailgate, and incorporated into revised APP/SSHP?		X		
New materials brought on site? MSDSs available?		X		
Exclusion (EZ), Contamination Reduction (CRZ), and Support Zones (SZ) delineated and enforced?			X	
General housekeeping measures in place to prevent hazards?	X			
Emergency Planning				
Were there any changes to emergency contact names, telephone numbers, or hospital? If so, were site personnel made aware and was information distributed/reposted.		X		
Adequate safety equipment inventory available?	X			
Fire extinguisher available (monthly inspection of extinguisher will suffice)	X			
Eyewash station(s) functioning and in place (weekly inspection of eye wash station will suffice)?	X			
First aid supplies available (weekly inspection of first aid kit will suffice)?	X			
Communication equipment readily available for emergencies?	X			
Any reported accidents/incidents at this site? If so, were accident reporting procedures followed?		X		
Air Monitoring				
Monitoring equipment specified in SSHP available and in working order? Air monitoring instrumentation for this site includes – check each if required/on site, note deficiencies in comments: • Combustible gas meter • Organic vapor analyzer • Contaminant specific analyzer for benzene (if total organic vapor concentrations exceed 0.5 ppm)			X	
Monitoring equipment calibrated and calibration records			X	

Y = Satisfactory or Yes; N = Unsatisfactory or No, N/A = Not applicable

Rating	Y	N	N/A	Comments/Immediate Corrective Action[1]
available?			X	
Environmental and personnel monitoring performed as specified in SSHP?			X	
PPE				
Proper dermal protection worn by EA and subcontracted employees when handling/ contacting hazardous chemicals or contaminated environmental media?	X			
Required PPE (hard hats, safety boots / shoes, eye protection with side shields, hearing protection) being worn by EA and subcontracted employees?	X			
PPE inspection completed by SSHO?	X			
Drill Rig Operations				
Daily rig inspection completed? Any equipment problems?			X	
Drill rigs/elevated equipment maintaining minimum 10-ft distance from energized (50 kV) overhead power lines?			X	
Investigation-derived Waste (IDW)				
Wastes properly staged, secured, and labeled at end of day?			X	
Additional Comments:				

Site Safety and Health Officer's Signature

11-16-16
Date

[1]If a deficiency is noted that cannot be immediately corrected, the SSHO will monitor the progress in correcting the deficiency and will document following:

- Date the deficiency was identified
- Description of the deficiency
- Name of the person responsible for correcting the deficiency
- Projected date of correction
- Actual date of correction.

Y = Satisfactory or Yes; N = Unsatisfactory or No, N/A = Not applicable

EA ENGINEERING, SCIENCE AND TECHNOLOGY, INC.
SAFETY MEETING REPORT

Date: 11-16-16	Time: 0730	Duration of meeting: 10 Min	Project # 62599DM01
Location: KAFB Bldg 19150		Task: Installing Unistrut + Running Conduit	

Type of meeting: X Daily ___ Weekly ___ Monthly ___ Other: _____

Items/Issues discussed:

1. Scope of work
2. Muster Area
3. Stop work Policy
4. First Aid Kit
5. Eye Wash
6. Drinking Water
7. SDS
8. PPE
9. Trainins
10. Housekeeping
11. Chemicals
12. Ladder use
13. Fall Protection
14. Hand Tools

Attach minutes of safety meeting if taken.

Safety questions/issues raised:	Actions/Follow-up needed:
1.	
2.	
3.	
4.	
5.	
6.	

Remarks:

Meeting conducted by: Daniel Chavez

HEALTH AND SAFETY ACTIVITY REPORT

Site: Bulk Fuels Facility Expansion Location: KAFB Bldg 19150

Weather Cond.: Sunny + Clear Onsite Hours: From 0700 To _____

Changes in PPE Levels[1]	Work Operations	Reasons for Change
NO Changes		

Site Safety and Health Plan Violations	Corrective Action Specified	Corrective Action Taken [2](yes/no)
NO Violations		

Observations and Comments:

None

Completed by: Daniel Chavez Date: 11-16-16

Site Health and Safety Supervisor

[1]Only SSHO may change PPE levels, using only criteria specified in APP/SSHP.
[2]If a deficiency is noted that cannot be immediately corrected, the SSHO will monitor the progress in correcting the deficiency and will document following:

- Date the deficiency was identified
- Description of the deficiency
- Name of the person responsible for correcting the deficiency
- Projected date of correction
- Actual date of correction.

DAILY REPORT

(ATTACH ADDITIONAL SHEETS IF NECESSARY)

CONTRACT NAME:	Kirtland AFB Bulk Fuels Facility Expansion of Dissolved Plume GWTS Design	REPORT NO:	31
CONTRACT NUMBER:	W912DR-12-D-0006	REPORT DATE:	17NOV16
REVISION NUMBER:	-	REVISION DATE:	-
TASK ORDER NUMBER:	DM01	PROJECT NAME / LOCATION:	KAFB, ABQ, NM
PROJECT NUMBER:	62599DM01	PROJECT DESCRIPTION:	KAFB GWTS Expansion
PROJECT MANAGER:	Devon Jercinovic	FIELD QUALITY MANAGER:	Alex Spilk
CONSTRUCTION MANAGER:	Alex Spilk	SITE SAFETY MANAGER:	Daniel Chavez

AM WEATHER:	Hazey, cold, windy	PM WEATHER:	cold, Partly windy Cloudy	MAX TEMP (F):	63°		

SUMMARY OF WORK PERFORMED TODAY

Install conduit and brackets, ~~Tro~~ troubleshoot PLCs

HEALTH AND SAFETY REPORT

SAFETY ACTIONS TAKEN TODAY/SAFETY INSPECTIONS CONDUCTED (Include Observations, Safety Violations, Corrective Instructions Given, Corrective Actions Taken, and Results of Safety Inspections Conducted: Visual observations, no issues

TAILGATE TOPICS: overhead hazards, equipment inspections, tool inspections material staging, proper PPE

SAFE BEHAVIOR OBSERVATIONS/SELF-ASSESSMENTS: Safe behavior observed

OPERATIONS / PRODUCTION REPORT

WORK FORCE – CONTRACTOR AND SUBCONTRACTOR

Company	Cumulative Total of Work Hours From Previous Report	Total Hours Today	Total Work Hours From Start of Injection Event
Techsas	142	8	150
Wilson Electric	109	15	124
I+C Solutions	22	6	28

EQUIPMENT ON HAND

Description of Equipment	Make/Model/Manufacturer	Equipment ID Number	Inspection Performed By
Manlift	Genie GS-1930	10145036	~~Ste~~ Travis Thomas

COMMENTS (acceptance status, inspection findings, etc.):

OK

WORK AND/OR TESTS ACCOMPLISHED OR IN PROGRESS

Performed Work / Test for Today: Installed conduit, brackets, and troubleshoot new PLC and KAFB-07

Planned Work / Test for Tomorrow: Install conduit and brackets

Planned Work / Test for Next Week: None

CHANGED CONDITIONS/DELAY/CONFLICTS ENCOUNTERED (List any conflicts with the project [i.e., scope of work and/or drawings], delays to the project attributable to site and weather conditions, etc. None

VISITORS AND DISCUSSIONS: None

QUALITY CONTROL REPORT

MATERIALS DELIVERED TO JOB SITE

Quantity/Volume/ Weight	Description of Materials Received	Make/Model/Manufacturer	Material Lot Number	Inspection Performed By
None				

COMMENTS (acceptance status, inspection findings, etc.):

INSPECTIONS PERFORMED

Task/Activity Inspected	Inspection Performed	Findings
conduit + brackets	visual observation	OK

TESTS PERFORMED

Task/Activity Tested	Test Performed	Test Results (Pass/Fail) - Criteria
KAFB-1	Operational Test	Pass - functional

QUALITY ISSUES AND RESOLUTIONS: None

SUBMITTALS INSPECTION / REVIEW

Submittal No.	Submittal Description	Specification/Plan Reference	Submittal Approved?		Comment/Reason/Action
NA	Daily Report	–	Yes ☐	No ☐	Pending
NA	SBO	–	Yes ☐	No ☐	Pending
NA	PTSP	–	Yes ☐	No ☐	Pending

REGULATORY COMPLIANCE REPORT

PERMIT INSPECTIONS PERFORMED: None

WASTE ACCUMULATION/STOCKPILE AREA INSPECTION

Inspection Performed By:		Signature of Inspector:	
Accumulation / Stockpile Area Inspected:	None		

No of Bins:		No of Tankers		No of Roll-Off Boxes:		No. of Tanks	

Inspection Results: NA

GENERAL COMMENTS

General Comments~ (rework, directives, etc.):

No comments

ATTACHMENTS

List of Attachments: (examples, as applicable: submittals, meeting minutes, safety meeting minutes, COCs, weight tickets, manifests, profiles, rework item list, RFIs, DCNs, photographs, etc.):

Photo log and safety documentation

NOTE: Write all entries legibly in ink. Line out all unused portions or designate as "not applicable". Preparer signs first and last name on each completed daily report. This form may be filled out electronically and signed electronically.

Alec Spall 17NOV16

PREPARER'S SIGNATURE DATE

Location: Newly Installed Influent GAC Vessels
Description: Newly Installed Conduit and Bracket
Date: 17 November 2016 Direction: Southeast

Location: Newly Installed Effluent Pump Skid
Description: Newly Installed Conduit
Date: 17 November 2016 Direction: West

Location: Newly Installed Effluent Tank
Description: Newly Installed Conduit
Date: 17 November 2016 Direction: West

Location: Newly Installed Influent Tank
Description: Newly Installed Conduit
Date: 17 November 2016 Direction: North

Location: Newly Installed Influent Pump Skid
Description: Newly Installed Conduit and Brackets
Date: 17 November 2016 Direction: West

EA Engineering, Science, and Technology, Inc.

DAILY SAFETY INSPECTION CHECKLIST (TO BE COMPLETED EACH DAY OF CONSTRUCTION OR HTRW SITE ACTIVITIES)

Site: Bulk Fuels Facility Expan
Location: KAFB Bldg 19156
Project No.: 625990JM01
Client: U.S. Army Corp of Engs

Prepared by SSHO: Daniel Chavez
Project Manager: Devon Jerricovic
Date: ~~11-16-16~~ 11-17-16

Rating	Y	N	N/A	Comments/Immediate Corrective Action[1]
Accident Prevention Plan (APP) and Site Safety and Health Plan (SSHP) General Requirements				
Are there new onsite personnel? • Did they receive pre-entry briefing and are their names recorded in field logbook or daily log? • Was the USACE PM made aware of the new personnel. • Required training and medical surveillance documentation received (e.g., 40-hr, 8 hr, etc.)?		X	X X X	
Did personnel sign in/out of site?	X			
Daily tailgate safety meetings conducted and documented?	X			
Were new activities performed today? Were hazards identified, discussed during the daily safety tailgate, and incorporated into revised APP/SSHP?		X		
New materials brought on site? MSDSs available?		X		
Exclusion (EZ), Contamination Reduction (CRZ), and Support Zones (SZ) delineated and enforced?			X	
General housekeeping measures in place to prevent hazards?	X			
Emergency Planning				
Were there any changes to emergency contact names, telephone numbers, or hospital? If so, were site personnel made aware and was information distributed/reposted.		X		
Adequate safety equipment inventory available?	X			
Fire extinguisher available (monthly inspection of extinguisher will suffice)	X			
Eyewash station(s) functioning and in place (weekly inspection of eye wash station will suffice)?	X			
First aid supplies available (weekly inspection of first aid kit will suffice)?	X			
Communication equipment readily available for emergencies?	X			
Any reported accidents/incidents at this site? If so, were accident reporting procedures followed?		X		
Air Monitoring				
Monitoring equipment specified in SSHP available and in working order? Air monitoring instrumentation for this site includes – check each if required/on site, note deficiencies in comments: • Combustible gas meter • Organic vapor analyzer • Contaminant specific analyzer for benzene (if total organic vapor concentrations exceed 0.5 ppm)			X	
Monitoring equipment calibrated and calibration records			X	

Y = Satisfactory or Yes; N = Unsatisfactory or No, N/A = Not applicable

Rating	Y	N	N/A	Comments/Immediate Corrective Action[1]
available?			X	
Environmental and personnel monitoring performed as specified in SSHP?			X	
PPE				
Proper dermal protection worn by EA and subcontracted employees when handling/ contacting hazardous chemicals or contaminated environmental media?			X	
Required PPE (hard hats, safety boots / shoes, eye protection with side shields, hearing protection) being worn by EA and subcontracted employees?	X			
PPE inspection completed by SSHO?	X			
Drill Rig Operations				
Daily rig inspection completed? Any equipment problems?			X	
Drill rigs/elevated equipment maintaining minimum 10-ft distance from energized (50 kV) overhead power lines?			X	
Investigation-derived Waste (IDW)				
Wastes properly staged, secured, and labeled at end of day?			X	

Additional Comments:

Dawn Chan
Site Safety and Health Officer's Signature

11-17-16
Date

[1]If a deficiency is noted that cannot be immediately corrected, the SSHO will monitor the progress in correcting the deficiency and will document following:

- Date the deficiency was identified
- Description of the deficiency
- Name of the person responsible for correcting the deficiency
- Projected date of correction
- Actual date of correction.

Y = Satisfactory or Yes; N = Unsatisfactory or No, N/A = Not applicable

HEALTH AND SAFETY ACTIVITY REPORT

Site: Bulk Fuels Facility Expansion Location: KAFB Bldg 19150

Weather Cond.: Sunny + Clear Onsite Hours: From 0700 To 1500

Changes in PPE Levels[1]	Work Operations	Reasons for Change
No Change		

Site Safety and Health Plan Violations	Corrective Action Specified	Corrective Action Taken [2](yes/no)
No Violations		

Observations and Comments:

None

Completed by: Daniel Chavez Date: 11-17-16

Site Health and Safety Supervisor

[1]Only SSHO may change PPE levels, using only criteria specified in APP/SSHP.

[2]If a deficiency is noted that cannot be immediately corrected, the SSHO will monitor the progress in correcting the deficiency and will document following:

- Date the deficiency was identified
- Description of the deficiency
- Name of the person responsible for correcting the deficiency
- Projected date of correction
- Actual date of correction.

EA ENGINEERING, SCIENCE AND TECHNOLOGY, INC.
SAFETY MEETING REPORT

Date: 11-17-16	**Time:** 0730	**Duration of meeting:** 10 MIN	**Project #** 62599DM01
Location: KAFB Bldg 19150		**Task:** Installing Unistrut & Running Conduit	

Type of meeting: _X_ Daily ____ Weekly ____ Monthly ____ Other:_____

Items/Issues discussed:

1. Overhead Hazards
2. Equipment Inspection
3. Tool Inspection
4. Material Staging
5. PPE
6. Visitors / other Contractors

Attach minutes of safety meeting if taken.

Safety questions/issues raised:	Actions/Follow-up needed:
1.	
2.	
3.	
4.	
5.	
6.	

Remarks:

Meeting conducted by:

Daniel Chavez

DAILY REPORT

(ATTACH ADDITIONAL SHEETS IF NECESSARY)

CONTRACT NAME:	Kirtland AFB Bulk Fuels Facility Expansion of Dissolved Plume GWTS Design	REPORT NO:	32
CONTRACT NUMBER:	W912DR-12-D-0006	REPORT DATE:	18 NOV 16
REVISION NUMBER:	-	REVISION DATE:	-
TASK ORDER NUMBER:	DM01	PROJECT NAME / LOCATION:	KAFB, ABQ, NM
PROJECT NUMBER:	62599DM01	PROJECT DESCRIPTION:	KAFB GWTS EXPANSION
PROJECT MANAGER:	Devon Jercinovic	FIELD QUALITY MANAGER:	Kevin McKeage
CONSTRUCTION MANAGER:	Alex Spiller	SITE SAFETY MANAGER:	Alex Spiller / Pete Ferrari

AM WEATHER:	Clear, cool light breeze	PM WEATHER:	Clear, cool light breeze	MAX TEMP (F):	53		

SUMMARY OF WORK PERFORMED TODAY

Installed conduit and brackets.

HEALTH AND SAFETY REPORT

SAFETY ACTIONS TAKEN TODAY/SAFETY INSPECTIONS CONDUCTED (Include Observations, Safety Violations, Corrective Instructions Given, Corrective Actions Taken, and Results of Safety Inspections Conducted:

Visual observation of safe work practices.

TAILGATE TOPICS:

Overhead safety, tool safety, manlift safety, PPE, etc.

SAFE BEHAVIOR OBSERVATIONS/SELF-ASSESSMENTS:

Safe behavior noted

OPERATIONS / PRODUCTION REPORT

WORK FORCE – CONTRACTOR AND SUBCONTRACTOR

Company	Cumulative Total of Work Hours From Previous Report	Total Hours Today	Total Work Hours From Start of Injection Event
Techsas	150	8	158
Wilson Electric	124	16	140

EQUIPMENT ON HAND

Description of Equipment	Make/Model/Manufacturer	Equipment ID Number	Inspection Performed By
Manlift	Genie GS-1930	10145036	Stephan Spiess

COMMENTS (acceptance status, inspection findings, etc.):

OK

WORK AND/OR TESTS ACCOMPLISHED OR IN PROGRESS

Performed Work / Test for Today:

Installed conduit and brackets.

Planned Work / Test for Tomorrow:

No work planned for tomorrow

Planned Work / Test for Next Week:

No work planned for next week

CHANGED CONDITIONS/DELAY/CONFLICTS ENCOUNTERED (List any conflicts with the project [i.e., scope of work and/or drawings], delays to the project attributable to site and weather conditions, etc. No issues

VISITORS AND DISCUSSIONS: None

QUALITY CONTROL REPORT

MATERIALS DELIVERED TO JOB SITE

Quantity/Volume/ Weight	Description of Materials Received	Make/Model/Manufacturer	Material Lot Number	Inspection Performed By
None				
Various	Various conduit fittings	Various	—	Kevin McKenzie

COMMENTS (acceptance status, inspection findings, etc.): NA

INSPECTIONS PERFORMED

Task/Activity Inspected	Inspection Performed	Findings
Conduit and brackets	Visual Inspection	OK

TESTS PERFORMED

Task/Activity Tested	Test Performed	Test Results (Pass/Fail) - Criteria
None		

QUALITY ISSUES AND RESOLUTIONS: None

SUBMITTALS INSPECTION / REVIEW

Submittal No.	Submittal Description	Specification/Plan Reference	Submittal Approved?		Comment/Reason/Action
NA	Daily Report	–	Yes ☐	No ☐	Pending
NA	SBO	–	Yes ☐	No ☐	Pending
NA	PTSP	–	Yes ☐	No ☐	Pending
NA					

REGULATORY COMPLIANCE REPORT

PERMIT INSPECTIONS PERFORMED: None

WASTE ACCUMULATION/STOCKPILE AREA INSPECTION

Inspection Performed By:	NA			Signature of Inspector:			
Accumulation / Stockpile Area Inspected:							
No of Bins:		No of Tankers		No of Roll-Off Boxes:		No. of Tanks	

Inspection Results:

NA

GENERAL COMMENTS

General Comments~ (rework, directives, etc.): None

ATTACHMENTS

List of Attachments: (examples, as applicable: submittals, meeting minutes, safety meeting minutes, COCs, weight tickets, manifests, profiles, rework item list, RFIs, DCNs, photographs, etc.): Photo log and safety documentation

NOTE: Write all entries legibly in ink. Line out all unused portions or designate as "not applicable". Preparer signs first and last name on each completed daily report. This form may be filled out electronically and signed electronically.

PREPARER'S SIGNATURE

18NOV16

DATE

Location: Driveway
Description: Conduit Fittings Delivered
Date: 18 November 2016 Direction: Down

Location: East Wall Above Control Room Door
Description: Newly Installed Conduit
Date: 18 November 2016 Direction: East

Location: Above Newly Installed GAC Vessels
Description: Newly Installed Conduit Bracket
Date: 18 November 2016 Direction: Up

Location: Above Newly Installed GAC Vessels
Description: Newly Installed Conduit
Date: 18 November 2016 Direction: Up

Location: Newly Installed Influent Pump Skid
Description: Newly Installed Conduit Fittings
Date: 18 November 2016 Direction: West

Location: Newly Installed Influent Tank
Description: Newly Installed Conduit
Date: 18 November 2016 Direction: West

Location: Newly Installed Effluent Tank
Description: Newly Installed Conduit
Date: 18 November 2016 Direction: West

Location: Newly Installed Effluent Pump Skid
Description: Newly Installed Conduit and Fittings
Date: 18 November 2016 Direction: West

EA Engineering, Science, and Technology, Inc.

DAILY SAFETY INSPECTION CHECKLIST (TO BE COMPLETED EACH DAY OF CONSTRUCTION OR HTRW SITE ACTIVITIES)

Site: Bulk Fuels Facility Expan
Location: KDFB Bldg 1910
Project No.: 625990DM01
Client: USACE

Prepared by SSHO: Alex Spilka
Project Manager: Devon Tercinovic
Date: 18NOV16

Rating	Y	N	N/A	Comments/Immediate Corrective Action[1]
Accident Prevention Plan (APP) and Site Safety and Health Plan (SSHP) General Requirements				
Are there new onsite personnel? • Did they receive pre-entry briefing and are their names recorded in field logbook or daily log? • Was the USACE PM made aware of the new personnel. • Required training and medical surveillance documentation received (e.g., 40-hr, 8 hr, etc.)?		X	X X X	
Did personnel sign in/out of site?	X			
Daily tailgate safety meetings conducted and documented?	X			
Were new activities performed today? Were hazards identified, discussed during the daily safety tailgate, and incorporated into revised APP/SSHP?		X		
New materials brought on site? MSDSs available?		X		
Exclusion (EZ), Contamination Reduction (CRZ), and Support Zones (SZ) delineated and enforced?			X	
General housekeeping measures in place to prevent hazards?	X			
Emergency Planning				
Were there any changes to emergency contact names, telephone numbers, or hospital? If so, were site personnel made aware and was information distributed/reposted.		X		
Adequate safety equipment inventory available?	X			
Fire extinguisher available (monthly inspection of extinguisher will suffice)	X			
Eyewash station(s) functioning and in place (weekly inspection of eye wash station will suffice)?	X			
First aid supplies available (weekly inspection of first aid kit will suffice)?	X			
Communication equipment readily available for emergencies?	X			
Any reported accidents/incidents at this site? If so, were accident reporting procedures followed?		X		
Air Monitoring				
Monitoring equipment specified in SSHP available and in working order? Air monitoring instrumentation for this site includes – check each if required/on site, note deficiencies in comments: • Combustible gas meter • Organic vapor analyzer • Contaminant specific analyzer for benzene (if total organic vapor concentrations exceed 0.5 ppm)			X	
Monitoring equipment calibrated and calibration records			X	

Y = Satisfactory or Yes; N = Unsatisfactory or No, N/A = Not applicable

Rating	Y	N	N/A	Comments/Immediate Corrective Action[1]
available?			X	
Environmental and personnel monitoring performed as specified in SSHP?			X	
PPE				
Proper dermal protection worn by EA and subcontracted employees when handling/ contacting hazardous chemicals or contaminated environmental media?			X	
Required PPE (hard hats, safety boots / shoes, eye protection with side shields, hearing protection) being worn by EA and subcontracted employees?	X			
PPE inspection completed by SSHO?	X			
Drill Rig Operations				
Daily rig inspection completed? Any equipment problems?			X	
Drill rigs/elevated equipment maintaining minimum 10-ft distance from energized (50 kV) overhead power lines?			X	
Investigation-derived Waste (IDW)				
Wastes properly staged, secured, and labeled at end of day?			X	
Additional Comments:				

Alec Spill
Site Safety and Health Officer's Signature

18NOV16
Date

[1]If a deficiency is noted that cannot be immediately corrected, the SSHO will monitor the progress in correcting the deficiency and will document following:

- Date the deficiency was identified
- Description of the deficiency
- Name of the person responsible for correcting the deficiency
- Projected date of correction
- Actual date of correction.

Y = Satisfactory or Yes; N = Unsatisfactory or No, N/A = Not applicable

HEALTH AND SAFETY ACTIVITY REPORT

Site: Bulk Fuel Facility Expansion Location: KAFB Bldg 19150

Weather Cond.: Cold, Clear, breezy Onsite Hours: From 0700 To _____

Changes in PPE Levels[1]	Work Operations	Reasons for Change
No Change		

Site Safety and Health Plan Violations	Corrective Action Specified	Corrective Action Taken [2] (yes/no)
No Violation		

Observations and Comments:

Nom

Completed by: Alex Spilk Date: 18NOV16

Site Health and Safety Supervisor

[1] Only SSHO may change PPE levels, using only criteria specified in APP/SSHP.

[2] If a deficiency is noted that cannot be immediately corrected, the SSHO will monitor the progress in correcting the deficiency and will document following:

- Date the deficiency was identified
- Description of the deficiency
- Name of the person responsible for correcting the deficiency
- Projected date of correction
- Actual date of correction.

EA ENGINEERING, SCIENCE AND TECHNOLOGY, INC.
SAFETY MEETING REPORT

Date: 18NOV16	Time: 0700	Duration of meeting: 10 min	Project # 62599DM01
Location: KAFB Bldg 19150		Task: Install unistrut and conduit	

Type of meeting: X Daily ___ Weekly ___ Monthly ___ Other: _____

Items/Issues discussed:

1. Overhead hazards
2. Equipment inspection
3. Housekeeping
4. Proper PPE
5. Safety contacts / 911

Attach minutes of safety meeting if taken.

Safety questions/issues raised:	Actions/Follow-up needed:
1. None	
2.	
3.	
4.	
5.	
6.	

Remarks:

Meeting conducted by:

Alex Spilka / Kevin McKeage

DAILY REPORT

(ATTACH ADDITIONAL SHEETS IF NECESSARY)

CONTRACT NAME:	Kirtland AFB Bulk Fuels Facility Expansion of Dissolved Plume GWTS Design	REPORT NO:	33
CONTRACT NUMBER:	W912DR-12-D-0006	REPORT DATE:	28 NOV 16
REVISION NUMBER:	-	REVISION DATE:	-
TASK ORDER NUMBER:	DM01	PROJECT NAME / LOCATION:	KAFB, ABQ, NM
PROJECT NUMBER:	62599DM01	PROJECT DESCRIPTION:	KAFB GWTS Expansion
PROJECT MANAGER:	Devon Jercinovic	FIELD QUALITY MANAGER:	Kevin McKenzie
CONSTRUCTION MANAGER:	Alex Spiller	SITE SAFETY MANAGER:	Daniel Chavez

AM WEATHER:	Cloudy, cool slight breeze	PM WEATHER:	Cloudy, cool Windy	MAX TEMP (F):	42		

SUMMARY OF WORK PERFORMED TODAY

Installed conduit and pipeing. Installed ARV and Vents on newly installed tanks.

HEALTH AND SAFETY REPORT

SAFETY ACTIONS TAKEN TODAY/SAFETY INSPECTIONS CONDUCTED (Include Observations, Safety Violations, Corrective Instructions Given, Corrective Actions Taken, and Results of Safety Inspections Conducted: Corrected an issue where two fall protection lanyards were connected together, Contractor was instructed to obtain a longer lanyard and work was paused.

Chemical Visual observations of safe work practices.

TAILGATE TOPICS:

Overhead hazards, equipment inspection, Housekeeping, welding safety, etc.

SAFE BEHAVIOR OBSERVATIONS/SELF-ASSESSMENTS:

Safe behavior Noted, except for the lanyard correction.

OPERATIONS / PRODUCTION REPORT

WORK FORCE – CONTRACTOR AND SUBCONTRACTOR

Company	Cumulative Total of Work Hours From Previous Report	Total Hours Today	Total Work Hours From Start of Injection Event
Techsas	158	8	166
Wilson Electric	140	16	156
Rupert	384	22	406
Mck Rich	141	8	149
I+C Solutions	28		

EQUIPMENT ON HAND

Description of Equipment	Make/Model/Manufacturer	Equipment ID Number	Inspection Performed By
Manlift	Genie GS-1930	10145036	Roberto Gurula
Manlift #2	Genie GS-1930		Mike Clifcorn

COMMENTS (acceptance status, inspection findings, etc.):

OK

WORK AND/OR TESTS ACCOMPLISHED OR IN PROGRESS

Performed Work / Test for Today:

Installed conduit and pipeing. Installed ARV and tank vents.

Planned Work / Test for Tomorrow:

Continue installing conduit and piping.

Planned Work / Test for Next Week:

Installing wiring and attaching magnetic flow meters to the existing influent and effluent skids.

CHANGED CONDITIONS/DELAY/CONFLICTS ENCOUNTERED (List any conflicts with the project [i.e., scope of work and/or drawings], delays to the project attributable to site and weather conditions, etc. No issues

VISITORS AND DISCUSSIONS: None.

QUALITY CONTROL REPORT

MATERIALS DELIVERED TO JOB SITE

Quantity/Volume/ Weight	Description of Materials Received	Make/Model/Manufacturer	Material Lot Number	Inspection Performed By
2	Y Strainers	ASME B31.9 / Watts ~~Siemens / Siemens~~ KM	1610-0853A	Kevin McKeon
1	Magnetic Flowmeter	Siemens / Siemens / Siemens	772603 6456	Kevin McKeon

COMMENTS (acceptance status, inspection findings, etc.): OK

INSPECTIONS PERFORMED

Task/Activity Inspected	Inspection Performed	Findings
Conduit	Visual Inspection	OK
Piping, ARV, and vents	Visual Inspection	OK

TESTS PERFORMED

Task/Activity Tested	Test Performed	Test Results (Pass/Fail) - Criteria
None		

QUALITY ISSUES AND RESOLUTIONS: None

SUBMITTALS INSPECTION / REVIEW

Submittal No.	Submittal Description	Specification/Plan Reference	Submittal Approved?		Comment/Reason/Action
NA	Daily Report	-	Yes ☐	No ☐	Pending
NA	SBO	-	Yes ☐	No ☐	Pending
NA	PTSP	-	Yes ☐	No ☐	Pending

REGULATORY COMPLIANCE REPORT

PERMIT INSPECTIONS PERFORMED: None

WASTE ACCUMULATION/STOCKPILE AREA INSPECTION

Inspection Performed By:	NA	Signature of Inspector:	
Accumulation / Stockpile Area Inspected:			

No of Bins:		No of Tankers		No of Roll-Off Boxes:		No. of Tanks	

Inspection Results: NA

GENERAL COMMENTS

General Comments~ (rework, directives, etc.): None

ATTACHMENTS

List of Attachments: (examples, as applicable: submittals, meeting minutes, safety meeting minutes, COCs, weight tickets, manifests, profiles, rework item list, RFIs, DCNs, photographs, etc.): Photo log and safety documentation

NOTE: Write all entries legibly in ink. Line out all unused portions or designate as "not applicable". Preparer signs first and last name on each completed daily report. This form may be filled out electronically and signed electronically.

PREPARER'S SIGNATURE

28 NOV 16

DATE

Location: Driveway
Description: Magnetic Flow Meter
Date: 28 November 2016 Direction: Down

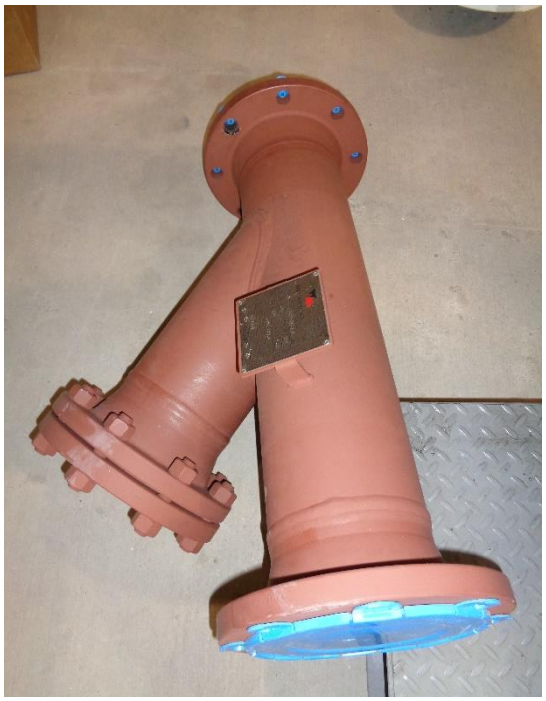

Location: Newly Installed Influent Skid Pump
Description: Y-Strainer Piping
Date: 28 November 2016 Direction: Down

Location: North Wall
Description: Newly Installed Butterfly Valve and Piping
Date: 28 November 2016 Direction: Northwest

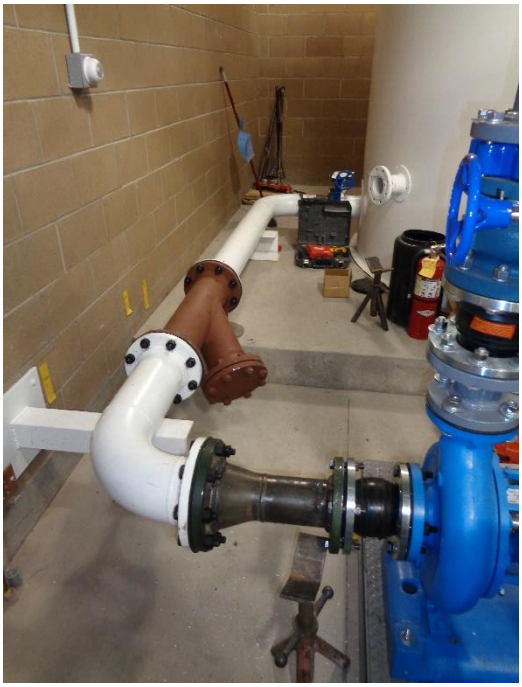

Location: West Wall
Description: Newly Installed Y-Strainer and Piping
Date: 28 November 2016 Direction: North

Location: Above Newly Installed Effluent Tank
Description: Newly Installed Tank Vent
Date: 28 November 2016 Direction: Northwest

Location: Newly Installed Influent Tank
Description: Newly Installed Tank Vent and ARV
Date: 28 November 2016 Direction: Northeast

Location: Newly Installed Influent Pump Skid
Description: Newly Installed Conduit
Date: 28 November 2016 Direction: Northwest

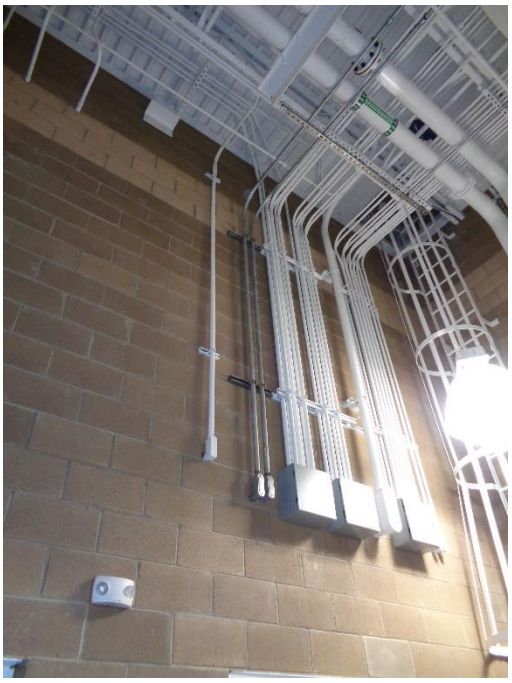

Location: East Wall
Description: Newly Installed Conduit
Date: 28 November 2016 Direction: Southeast

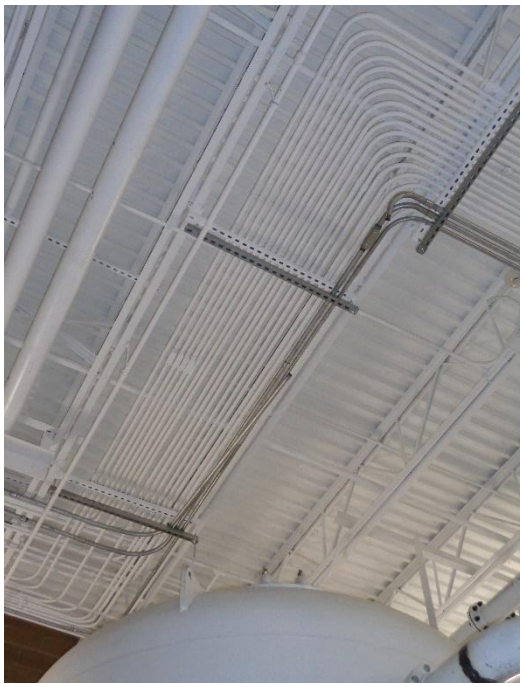

Location: Above Newly Installed GAC Vessels
Description: Newly Installed Conduit
Date: 28 November 2016 Direction: Up

EA Engineering, Science, and Technology, Inc.

DAILY SAFETY INSPECTION CHECKLIST (TO BE COMPLETED EACH DAY OF CONSTRUCTION OR HTRW SITE ACTIVITIES)

Site: Bulk Fuels Facility Expan
Location: KAFB Bldg 19150
Project No.: 62599ODM01
Client: USACE

Prepared by SSHO: Daniel Chavez
Project Manager: Devon Jercinovic
Date: 11/28/16

Rating	Y	N	N/A	Comments/Immediate Corrective Action[1]
Accident Prevention Plan (APP) and Site Safety and Health Plan (SSHP) General Requirements				
Are there new onsite personnel? • Did they receive pre-entry briefing and are their names recorded in field logbook or daily log? • Was the USACE PM made aware of the new personnel. • Required training and medical surveillance documentation received (e.g., 40-hr, 8 hr, etc.)?		X	X X X	
Did personnel sign in/out of site?	X			
Daily tailgate safety meetings conducted and documented?	X			
Were new activities performed today? Were hazards identified, discussed during the daily safety tailgate, and incorporated into revised APP/SSHP?	X			Rupert Pipefitters Welding
New materials brought on site? MSDSs available?		X		
Exclusion (EZ), Contamination Reduction (CRZ), and Support Zones (SZ) delineated and enforced?			X	
General housekeeping measures in place to prevent hazards?	X			
Emergency Planning				
Were there any changes to emergency contact names, telephone numbers, or hospital? If so, were site personnel made aware and was information distributed/reposted.	X			
Adequate safety equipment inventory available?	X			
Fire extinguisher available (monthly inspection of extinguisher will suffice)	X			
Eyewash station(s) functioning and in place (weekly inspection of eye wash station will suffice)?	X			
First aid supplies available (weekly inspection of first aid kit will suffice)?	X			
Communication equipment readily available for emergencies?	X			
Any reported accidents/incidents at this site? If so, were accident reporting procedures followed?		X		
Air Monitoring				
Monitoring equipment specified in SSHP available and in working order? Air monitoring instrumentation for this site includes – check each if required/on site, note deficiencies in comments: • Combustible gas meter • Organic vapor analyzer • Contaminant specific analyzer for benzene (if total organic vapor concentrations exceed 0.5 ppm)			X	
Monitoring equipment calibrated and calibration records			X	

Y = Satisfactory or Yes; N = Unsatisfactory or No, N/A = Not applicable

Rating	Y	N	N/A	Comments/Immediate Corrective Action[1]
available?			X	
Environmental and personnel monitoring performed as specified in SSHP?			X	
PPE				
Proper dermal protection worn by EA and subcontracted employees when handling/ contacting hazardous chemicals or contaminated environmental media?	X			
Required PPE (hard hats, safety boots / shoes, eye protection with side shields, hearing protection) being worn by EA and subcontracted employees?	X			
PPE inspection completed by SSHO?	X			
Drill Rig Operations				
Daily rig inspection completed? Any equipment problems?			X	
Drill rigs/elevated equipment maintaining minimum 10-ft distance from energized (50 kV) overhead power lines?			X	
Investigation-derived Waste (IDW)				
Wastes properly staged, secured, and labeled at end of day?			X	

Additional Comments:

Site Safety and Health Officer's Signature

11/28/16
Date

[1]If a deficiency is noted that cannot be immediately corrected, the SSHO will monitor the progress in correcting the deficiency and will document following:

- Date the deficiency was identified
- Description of the deficiency
- Name of the person responsible for correcting the deficiency
- Projected date of correction
- Actual date of correction.

Y = Satisfactory or Yes; N = Unsatisfactory or No, N/A = Not applicable

EA ENGINEERING, SCIENCE AND TECHNOLOGY, INC.
SAFETY MEETING REPORT

Date: 11/28/16	Time: 0700	Duration of meeting:	Project# 625990DM01
Location: KAFB Bldg 19150		Task: Install Pipe (Rupert) Install unistrut + Conduit (Wilson)	

Type of meeting: X Daily ___ Weekly ___ Monthly ___ Other: _____

Items/Issues discussed:

1. Overhead Hazard
2. Equipment Inspection
3. Housekeeping
4. PPE
5. Fall Hazards
6. Welding Hazard

Attach minutes of safety meeting if taken.

Safety questions/issues raised:	Actions/Follow-up needed:
1. Wilson was not wearing the required	Talked to Travis and he brought back
2. Fall Protection equipment	the correct equipment
3.	
4.	
5.	
6.	

Remarks:

Meeting conducted by: Daniel Chavez

HEALTH AND SAFETY ACTIVITY REPORT

Site: Bulk Fuel Facility Expansion Location: KAFB Bldg 19150

Weather Cond.: Cold, Clear Onsite Hours: From 0700 To _____

Changes in PPE Levels[1]	Work Operations	Reasons for Change
No Change		

Site Safety and Health Plan Violations	Corrective Action Specified	Corrective Action Taken [2](yes/no)
Wilson Electric had Two Fall protection lanyards attached to each other. Work was Paused employee Came down and issue was talked about. Travis went to Pick up the Correct lanyard.		

Observations and Comments:

Completed by: Daniel Chavez Date: 11/28/16
Site Health and Safety Supervisor

[1]Only SSHO may change PPE levels, using only criteria specified in APP/SSHP.
[2]If a deficiency is noted that cannot be immediately corrected, the SSHO will monitor the progress in correcting the deficiency and will document following:

- Date the deficiency was identified
- Description of the deficiency
- Name of the person responsible for correcting the deficiency
- Projected date of correction
- Actual date of correction.

DAILY REPORT

(ATTACH ADDITIONAL SHEETS IF NECESSARY)

CONTRACT NAME:	Kirtland AFB Bulk Fuels Facility Expansion of Dissolved Plume GWTS Design	REPORT NO:	34
CONTRACT NUMBER:	W912DR-12-D-0006	REPORT DATE:	29NOV16
REVISION NUMBER:	-	REVISION DATE:	-
TASK ORDER NUMBER:	DM01	PROJECT NAME / LOCATION:	KAFB, ABQ, NM
PROJECT NUMBER:	62599DM01	PROJECT DESCRIPTION:	KAFB GWTS Expansion
PROJECT MANAGER:	Devon Jercinovic	FIELD QUALITY MANAGER:	Kody Garcia
CONSTRUCTION MANAGER:	Kevin McKeage	SITE SAFETY MANAGER:	John Kayate

AM WEATHER:	Cloudy, cold below freezing	PM WEATHER:	Cloudy, cold	MAX TEMP (F):	39°		

SUMMARY OF WORK PERFORMED TODAY

Pipe installation. ~~Flange~~ Coupling installation, Conduit installation.

HEALTH AND SAFETY REPORT

SAFETY ACTIONS TAKEN TODAY/SAFETY INSPECTIONS CONDUCTED (Include Observations, Safety Violations, Corrective Instructions Given, Corrective Actions Taken, and Results of Safety Inspections Conducted:

Observed safe work practices

TAILGATE TOPICS:

Pinch points, equipment inspection, PPE, eyewash stations

SAFE BEHAVIOR OBSERVATIONS/SELF-ASSESSMENTS:

Safe behavior practiced.

OPERATIONS / PRODUCTION REPORT

WORK FORCE – CONTRACTOR AND SUBCONTRACTOR

Company	Cumulative Total of Work Hours From Previous Report	Total Hours Today	Total Work Hours From Start of Injection Event
Rupert	406	21	~~413~~ 427
Techsas	166	8	174
Mick Rich	149	7	156
Wilson	156	4	160

EQUIPMENT ON HAND

Description of Equipment	Make/Model/Manufacturer	Equipment ID Number	Inspection Performed By
DC Welder	Miller PipePro 304	LH011352 6	John Kayate
Manlift	Genie GS-1930	10145036	Roberto Gurrola

COMMENTS (acceptance status, inspection findings, etc.):

OK

WORK AND/OR TESTS ACCOMPLISHED OR IN PROGRESS

Performed Work / Test for Today:

Installed influent skid piping and ~~flanges~~ coupling. Installed conduit.

KA

Planned Work / Test for Tomorrow:

Pipe Securing (U-bolt installations) ; Conduit installation

Planned Work / Test for Next Week:

Wiring installation ; magnetic flow meter installation

CHANGED CONDITIONS/DELAY/CONFLICTS ENCOUNTERED (List any conflicts with the project [i.e., scope of work and/or drawings], delays to the project attributable to site and weather conditions, etc. NO ISSUES

VISITORS AND DISCUSSIONS: NA

QUALITY CONTROL REPORT

MATERIALS DELIVERED TO JOB SITE

Quantity/Volume/ Weight	Description of Materials Received	Make/Model/Manufacturer	Material Lot Number	Inspection Performed By
NA				

COMMENTS (acceptance status, inspection findings, etc.):

INSPECTIONS PERFORMED

Task/Activity Inspected	Inspection Performed	Findings
Piping, valves	Visual inspection	OK
Conduit	visual inspection	OK

TESTS PERFORMED

Task/Activity Tested	Test Performed	Test Results (Pass/Fail) - Criteria
None		

QUALITY ISSUES AND RESOLUTIONS:

SUBMITTALS INSPECTION / REVIEW

Submittal No.	Submittal Description	Specification/Plan Reference	Submittal Approved?		Comment/Reason/Action
NA	Daily Report	–	Yes ☐	No ☐	Pending
NA	SBO	–	Yes ☐	No ☐	Pending
NA	PTSP	–	Yes ☐	No ☐	Pending

REGULATORY COMPLIANCE REPORT

PERMIT INSPECTIONS PERFORMED: NONE

WASTE ACCUMULATION/STOCKPILE AREA INSPECTION

Inspection Performed By:	NA	Signature of Inspector:			
Accumulation / Stockpile Area Inspected:					
No of Bins:		No of Tankers		No of Roll-Off Boxes:		No. of Tanks	

Inspection Results:

NA

GENERAL COMMENTS

General Comments~ (rework, directives, etc.): None

ATTACHMENTS

List of Attachments: (examples, as applicable: submittals, meeting minutes, safety meeting minutes, COCs, weight tickets, manifests, profiles, rework item list, RFIs, DCNs, photographs, etc.): Photo log and Safety documentation

NOTE: Write all entries legibly in ink. Line out all unused portions or designate as "not applicable". Preparer signs first and last name on each completed daily report. This form may be filled out electronically and signed electronically.

Kady A. Garcia — PREPARER'S SIGNATURE

29 Nov 16 — DATE

Location: Newly Installed Influent Skid Pump
Description: Newly Installed Piping
Date: 29 November 2016 Direction: Northeast

Location: Newly Installed Influent Skid Pump
Description: Newly Installed Expansion Coupling
Date: 29 November 2016 Direction: Down

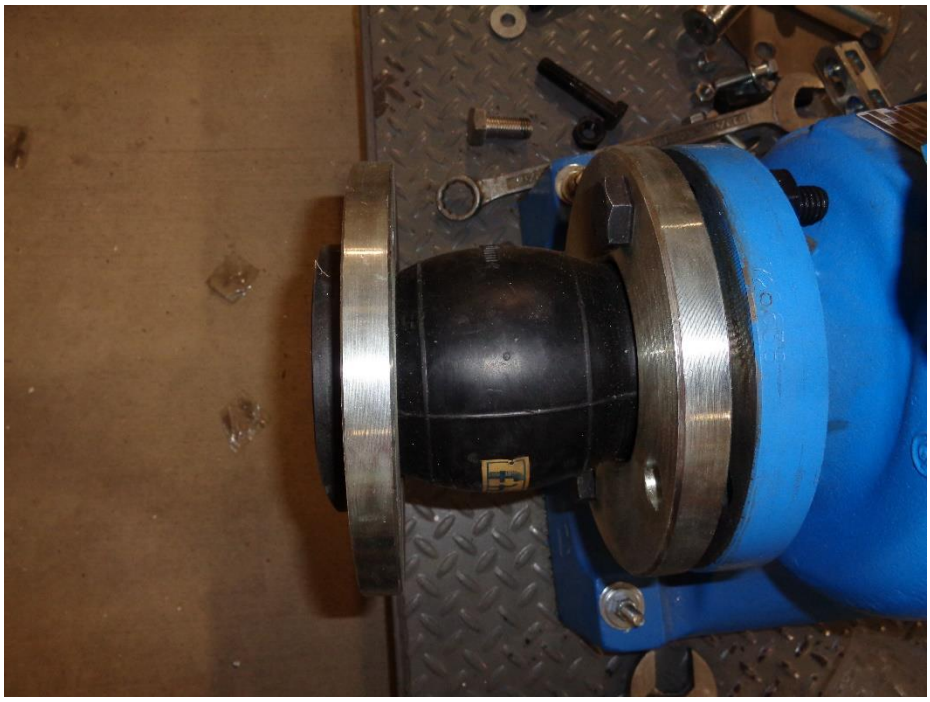

Location: Newly Installed Influent Skid Pump
Description: Newly Installed Expansion Coupling
Date: 29 November 2016 Direction: Down

Location: Newly Installed Influent Skid Pump
Description: Newly Installed Butterfly Valve
Date: 29 November 2016 Direction: North

Location: Newly Installed Influent Skid Pump
Description: Newly Installed Butterfly Valve
Date: 29 November 2016 Direction: North

Location: Newly Installed Influent Skid Pump
Description: Newly Installed Reducer
Date: 29 November 2016 Direction: Down

Location: Newly Installed Influent Skid Pump
Description: Newly Installed Reducer
Date: 29 November 2016 Direction: Down

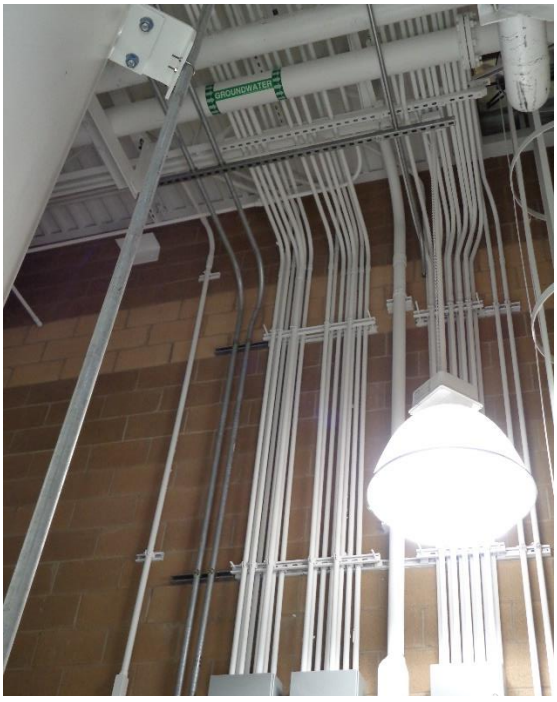

Location: East Wall
Description: Newly Installed Conduit
Date: 29 November 2016 Direction: Southeast

EA Engineering, Science, and Technology, Inc.

DAILY SAFETY INSPECTION CHECKLIST (TO BE COMPLETED EACH DAY OF CONSTRUCTION OR HTRW SITE ACTIVITIES)

Site: Bulk Fuels Facility EPAW
Location: KAFB Bldg 19150
Project No.: 625990Dmo4
Client: USACE

Prepared by SSHO: John Kavate
Project Manager: Devon Jercinovic
Date: 11/29/2016

Rating	Y	N	N/A	Comments/Immediate Corrective Action[1]
Accident Prevention Plan (APP) and Site Safety and Health Plan (SSHP) General Requirements				
Are there new onsite personnel? • Did they receive pre-entry briefing and are their names recorded in field logbook or daily log? • Was the USACE PM made aware of the new personnel. • Required training and medical surveillance documentation received (e.g., 40-hr, 8 hr, etc.)?		X	X X X	
Did personnel sign in/out of site?	X			
Daily tailgate safety meetings conducted and documented?	X			
Were new activities performed today? Were hazards identified, discussed during the daily safety tailgate, and incorporated into revised APP/SSHP?		X		
New materials brought on site? MSDSs available?		X		
Exclusion (EZ), Contamination Reduction (CRZ), and Support Zones (SZ) delineated and enforced?			X	
General housekeeping measures in place to prevent hazards?	X			
Emergency Planning				
Were there any changes to emergency contact names, telephone numbers, or hospital? If so, were site personnel made aware and was information distributed/reposted.	Y			
Adequate safety equipment inventory available?	X			
Fire extinguisher available (monthly inspection of extinguisher will suffice)	X			
Eyewash station(s) functioning and in place (weekly inspection of eye wash station will suffice)?	X			
First aid supplies available (weekly inspection of first aid kit will suffice)?	X			
Communication equipment readily available for emergencies?	X			
Any reported accidents/incidents at this site? If so, were accident reporting procedures followed?		X		
Air Monitoring				
Monitoring equipment specified in SSHP available and in working order? Air monitoring instrumentation for this site includes – check each if required/on site, note deficiencies in comments: • Combustible gas meter • Organic vapor analyzer • Contaminant specific analyzer for benzene (if total organic vapor concentrations exceed 0.5 ppm)			X	
Monitoring equipment calibrated and calibration records			X	

Y = Satisfactory or Yes; N = Unsatisfactory or No, N/A = Not applicable

Rating	Y	N	N/A	Comments/Immediate Corrective Action[1]
available?			X	
Environmental and personnel monitoring performed as specified in SSHP?			X	
PPE				
Proper dermal protection worn by EA and subcontracted employees when handling/ contacting hazardous chemicals or contaminated environmental media?	X			
Required PPE (hard hats, safety boots / shoes, eye protection with side shields, hearing protection) being worn by EA and subcontracted employees?	X			
PPE inspection completed by SSHO?	X			
Drill Rig Operations				
Daily rig inspection completed? Any equipment problems?			X	
Drill rigs/elevated equipment maintaining minimum 10-ft distance from energized (50 kV) overhead power lines?			X	
Investigation-derived Waste (IDW)				
Wastes properly staged, secured, and labeled at end of day?			X	

Additional Comments:

John Krayak
Site Safety and Health Officer's Signature

11/29/2016
Date

[1]If a deficiency is noted that cannot be immediately corrected, the SSHO will monitor the progress in correcting the deficiency and will document following:

- Date the deficiency was identified
- Description of the deficiency
- Name of the person responsible for correcting the deficiency
- Projected date of correction
- Actual date of correction.

Y = Satisfactory or Yes; N = Unsatisfactory or No, N/A = Not applicable

EA ENGINEERING, SCIENCE AND TECHNOLOGY, INC.
SAFETY MEETING REPORT

Date: 11/28/2016	**Time:** 0700	**Duration of meeting:** 15 MIN	**Project #** 62599OD M01
Location: KAFB Bldg 19150		**Task:** INSTALL PIPE (EU.PENT) INSTALL CONDUIT (WILSON)	

Type of meeting: X Daily ___ Weekly ___ Monthly ___ Other: _____

Items/Issues discussed:

1. Equipment Inspection and Keeping Equipment clean
2. Welding. Protecting others
3. Fall protection
4.
5.

Attach minutes of safety meeting if taken.

Safety questions/issues raised:	Actions/Follow-up needed:
1. Wilson not going to be in till	
2. Afternoon. showed up after lunch	
3.	
4.	
5.	
6.	

Remarks:

Meeting conducted by: John Krayate

HEALTH AND SAFETY ACTIVITY REPORT

Site: BULK Fuel Facility Expansion Location: KAFB

Weather Cond.: Cold, SNOW Onsite Hours: From 0700 To _____

Changes in PPE Levels[1]	Work Operations	Reasons for Change
NO CHANGES		

Site Safety and Health Plan Violations	Corrective Action Specified	Corrective Action Taken [2](yes/no)
NO VIOLATIONS		

Observations and Comments:
ALL OBSERVATIONS GOOD

Completed by: JOHN KRAYATE Date: NOV. 29, 2016
Site Health and Safety Supervisor

[1]Only SSHO may change PPE levels, using only criteria specified in APP/SSHP.
[2]If a deficiency is noted that cannot be immediately corrected, the SSHO will monitor the progress in correcting the deficiency and will document following:

- Date the deficiency was identified
- Description of the deficiency
- Name of the person responsible for correcting the deficiency
- Projected date of correction
- Actual date of correction.

DAILY REPORT

(ATTACH ADDITIONAL SHEETS IF NECESSARY)

CONTRACT NAME:	Kirtland AFB Bulk Fuels Facility Expansion of Dissolved Plume GWTS Design	REPORT NO:	35
CONTRACT NUMBER:	W912DR-12-D-0006	REPORT DATE:	30NOV16
REVISION NUMBER:	-	REVISION DATE:	-
TASK ORDER NUMBER:	DM01	PROJECT NAME / LOCATION:	KAFB, ABQ, NM
PROJECT NUMBER:	62599DM01	PROJECT DESCRIPTION:	KAFB GWTS Expansion
PROJECT MANAGER:	Devon Jercinovic	FIELD QUALITY MANAGER:	Kody Garcia
CONSTRUCTION MANAGER:	Kevin McKeage	SITE SAFETY MANAGER:	John Kayate

AM WEATHER:	Cloudy, Cold	PM WEATHER:	Sunny, Cold	MAX TEMP (F):	39°		

SUMMARY OF WORK PERFORMED TODAY

Conduit installation, wiring measurements, pipe welding, U-bolt ~~SS~~ KH installation
Anchor GAC tanks to GWTS floor, grout work

HEALTH AND SAFETY REPORT

SAFETY ACTIONS TAKEN TODAY/SAFETY INSPECTIONS CONDUCTED (Include Observations, Safety Violations, Corrective Instructions Given, Corrective Actions Taken, and Results of Safety Inspections Conducted:

Observed safe work practices

TAILGATE TOPICS:

Lift safety, PPE, Overhead hazards, power tools safety, slips/trips

SAFE BEHAVIOR OBSERVATIONS/SELF-ASSESSMENTS:

Safe behavior monitored

OPERATIONS / PRODUCTION REPORT

WORK FORCE – CONTRACTOR AND SUBCONTRACTOR

Company	Cumulative Total of Work Hours From Previous Report	Total Hours Today	Total Work Hours From Start of Injection Event
Rupert	427	24	451
Texsas	174	8	182
Mick Rich	156	6	162
Wilson	160	KH ~~8~~ 16	KH ~~168~~ 176

EQUIPMENT ON HAND

Description of Equipment	Make/Model/Manufacturer	Equipment ID Number	Inspection Performed By
DC Welder	Miller PipePro 304	LH011 3526	John Kayate
Manlift	Genie GS-1930	101450 36	Roberto Gurrola

COMMENTS (acceptance status, inspection findings, etc.):

OK

WORK AND/OR TESTS ACCOMPLISHED OR IN PROGRESS

Performed Work / Test for Today: re-Welded flange to enlarger, U-bolt installation, secured GAC tanks, Installed conduit support hardware and performed wiring measurements, grout work

Planned Work / Test for Tomorrow:

U-bolt installation, magnetic flow meter installation

Planned Work / Test for Next Week:

Wiring installation / flow meter connecting ~~toky~~

CHANGED CONDITIONS/DELAY/CONFLICTS ENCOUNTERED (List any conflicts with the project [i.e., scope of work and/or drawings], delays to the project attributable to site and weather conditions, etc. no issues

VISITORS AND DISCUSSIONS: none

QUALITY CONTROL REPORT

MATERIALS DELIVERED TO JOB SITE

Quantity/Volume/ Weight	Description of Materials Received	Make/Model/Manufacturer	Material Lot Number	Inspection Performed By
NA				

COMMENTS (acceptance status, inspection findings, etc.):

INSPECTIONS PERFORMED

Task/Activity Inspected	Inspection Performed	Findings
Weld job	visual inspection	OK
grout work	visual inspection	OK

TESTS PERFORMED

Task/Activity Tested	Test Performed	Test Results (Pass/Fail) - Criteria
none		

QUALITY ISSUES AND RESOLUTIONS:

SUBMITTALS INSPECTION / REVIEW

Submittal No.	Submittal Description	Specification/Plan Reference	Submittal Approved?		Comment/Reason/Action
NA	Daily Report	–	Yes ☐	No ☐	Pending
NA	SBO	–	Yes ☐	No ☐	Pending
NA	PTSP	–	Yes ☐	No ☐	Pending

REGULATORY COMPLIANCE REPORT

PERMIT INSPECTIONS PERFORMED: none

WASTE ACCUMULATION/STOCKPILE AREA INSPECTION

Inspection Performed By:		NA		Signature of Inspector:			
Accumulation / Stockpile Area Inspected:							
No of Bins:		No of Tankers		No of Roll-Off Boxes:		No. of Tanks	

Inspection Results:

NA

GENERAL COMMENTS

General Comments~ (rework, directives, etc.): none	
ATTACHMENTS	
List of Attachments: (examples, as applicable: submittals, meeting minutes, safety meeting minutes, COCs, weight tickets, manifests, profiles, rework item list, RFIs, DCNs, photographs, etc.): Photo log and safety documentation	
NOTE: Write all entries legibly in ink. Line out all unused portions or designate as "not applicable". Preparer signs first and last name on each completed daily report. This form may be filled out electronically and signed electronically.	Kody A. Garcia (PREPARER'S SIGNATURE) 30NOV16 (DATE)

Location: New Effluent Pump Skid
Description: New Grout Work
Date: 30 November 2016 Direction: Northwest

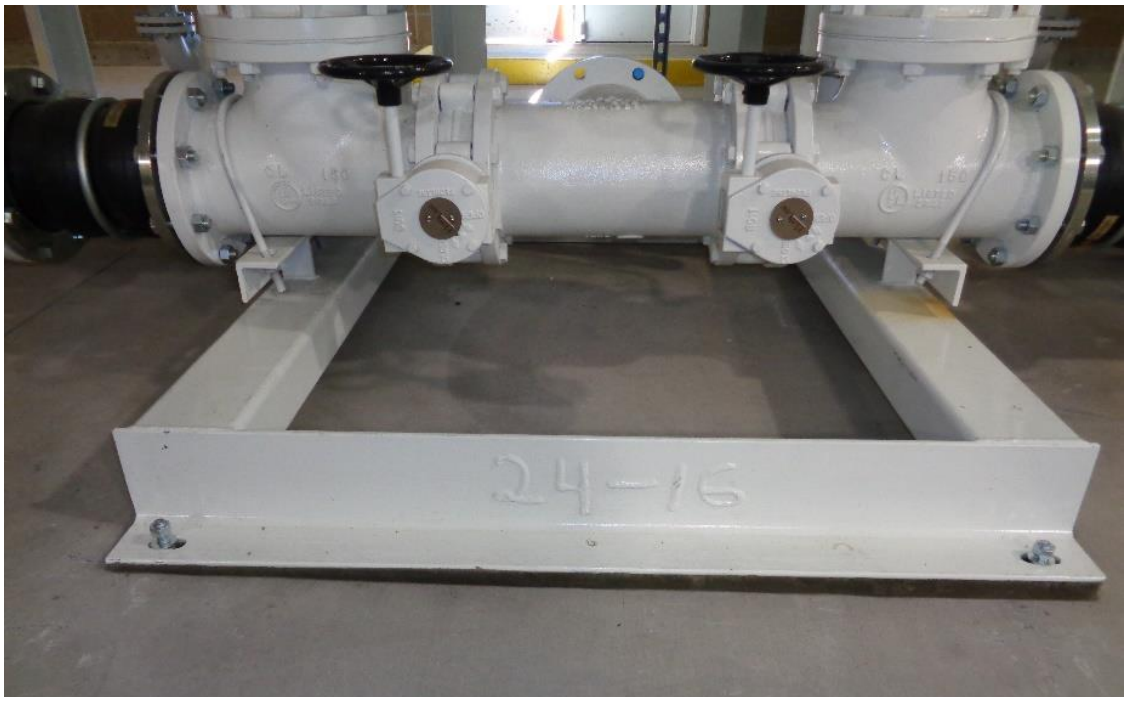

Location: Between Newly Installed GAC Vessels
Description: New Grout Work
Date: 30 November 2016 Direction: South

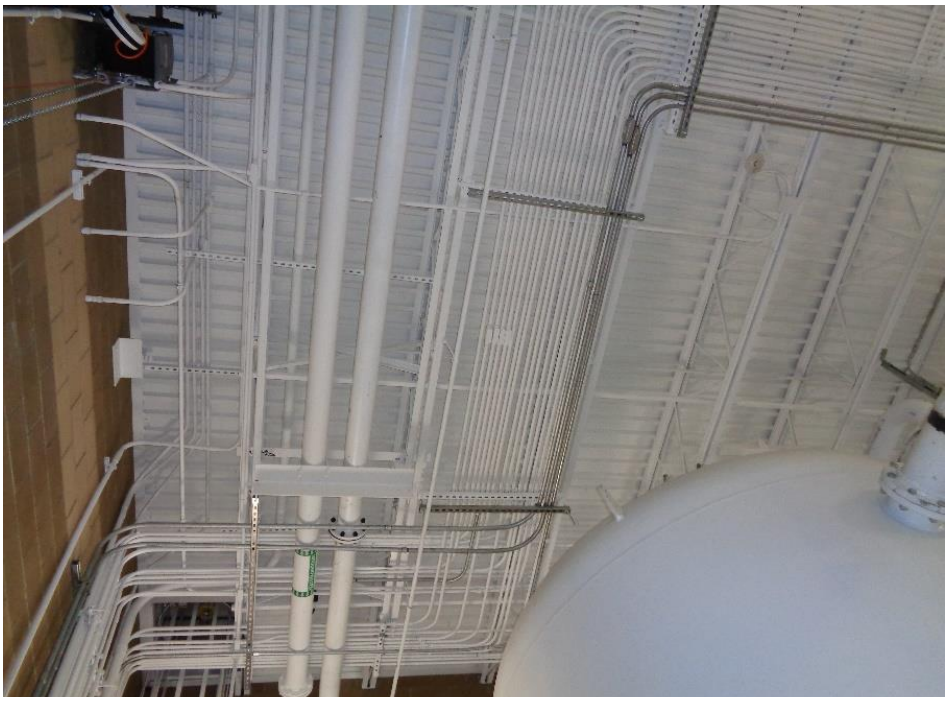

Location: Above Newly Installed GAC Vessels
Description: Newly Installed Strut Pipe Clamps
Date: 30 November 2016 Direction: Up

Location: Ceiling Above All GAC Vessels
Description: Newly Installed Strut Pipe Clamps
Date: 30 November 2016 Direction: Up

Location: New Influent Feed Tank
Description: Conduit Section Removed (New Design Adjustment)
Date: 30 November 2016 Direction: North

Location: New Effluent Feed Tank
Description: Conduit Section Removed (New Design Adjustment)
Date: 30 November 2016 Direction: North

Location: New Effluent Pump Skid
Description: Pull Tape (Wiring Preparation)
Date: 30 November 2016 Direction: West

Location: East Wall Above HMI Room Doorway
Description: Pull Tape (Wiring Preparation)
Date: 30 November 2016 Direction: East

Location: New Effluent Pump Skid
Description: New Weld Job on Flange to Enlarger Connection
Date: 30 November 2016 Direction: Down

EA Engineering, Science, and Technology, Inc.

DAILY SAFETY INSPECTION CHECKLIST (TO BE COMPLETED EACH DAY OF CONSTRUCTION OR HTRW SITE ACTIVITIES)

Site: BULK FUEL FACILITY Expan. Prepared by SSHO: JOHN KAYHATE
Location: KAFB Bldg 19150
Project No.: 625990DM01 Project Manager: DEVON JERCINOVIC
Client: USACE Date: 11/30/2016

Rating	Y	N	N/A	Comments/Immediate Corrective Action[1]
Accident Prevention Plan (APP) and Site Safety and Health Plan (SSHP) General Requirements				
Are there new onsite personnel? • Did they receive pre-entry briefing and are their names recorded in field logbook or daily log? • Was the USACE PM made aware of the new personnel. • Required training and medical surveillance documentation received (e.g., 40-hr, 8 hr, etc.)?		X	X X X	
Did personnel sign in/out of site?	X			
Daily tailgate safety meetings conducted and documented?	X			
Were new activities performed today? Were hazards identified, discussed during the daily safety tailgate, and incorporated into revised APP/SSHP?		X		
New materials brought on site? MSDSs available?		X		
Exclusion (EZ), Contamination Reduction (CRZ), and Support Zones (SZ) delineated and enforced?			X	
General housekeeping measures in place to prevent hazards?	X			
Emergency Planning				
Were there any changes to emergency contact names, telephone numbers, or hospital? If so, were site personnel made aware and was information distributed/reposted.		X		
Adequate safety equipment inventory available?	X			
Fire extinguisher available (monthly inspection of extinguisher will suffice)	X			
Eyewash station(s) functioning and in place (weekly inspection of eye wash station will suffice)?	X			
First aid supplies available (weekly inspection of first aid kit will suffice)?	X			
Communication equipment readily available for emergencies?	X			
Any reported accidents/incidents at this site? If so, were accident reporting procedures followed?		X		
Air Monitoring				
Monitoring equipment specified in SSHP available and in working order? Air monitoring instrumentation for this site includes – check each if required/on site, note deficiencies in comments: • Combustible gas meter • Organic vapor analyzer • Contaminant specific analyzer for benzene (if total organic vapor concentrations exceed 0.5 ppm)			X	
Monitoring equipment calibrated and calibration records			X	

Y = Satisfactory or Yes; N = Unsatisfactory or No, N/A = Not applicable

Rating	Y	N	N/A	Comments/Immediate Corrective Action[1]
available?			X	
Environmental and personnel monitoring performed as specified in SSHP?			X	
PPE				
Proper dermal protection worn by EA and subcontracted employees when handling/ contacting hazardous chemicals or contaminated environmental media?	X			
Required PPE (hard hats, safety boots / shoes, eye protection with side shields, hearing protection) being worn by EA and subcontracted employees?	X			
PPE inspection completed by SSHO?	X			
Drill Rig Operations				
Daily rig inspection completed? Any equipment problems?			X	
Drill rigs/elevated equipment maintaining minimum 10-ft distance from energized (50 kV) overhead power lines?			X	
Investigation-derived Waste (IDW)				
Wastes properly staged, secured, and labeled at end of day?			X	

Additional Comments:

Site Safety and Health Officer's Signature

Nov. 30 2016
Date

[1]If a deficiency is noted that cannot be immediately corrected, the SSHO will monitor the progress in correcting the deficiency and will document following:

- Date the deficiency was identified
- Description of the deficiency
- Name of the person responsible for correcting the deficiency
- Projected date of correction
- Actual date of correction.

Y = Satisfactory or Yes; N = Unsatisfactory or No, N/A = Not applicable

EA ENGINEERING, SCIENCE AND TECHNOLOGY, INC.
SAFETY MEETING REPORT

Date: 11/30/2016	**Time:** 7:00	**Duration of meeting:** 10 MINS.	**Project #** 623990D M01
Location: KAFB Building 19150		**Task:** INSTALL CONDUIT (WILSON) INSTALL PIPE (RUPERT)	

Type of meeting: X Daily ___ Weekly ___ Monthly ___ Other: _____

Items/Issues discussed:

1. HOUSE KEEPING
2. 100% TIE OFF, SCISSOR LIFT/LADDER OVER 6'
3. PINCH POINTS
4. 100% PPE
5.

Attach minutes of safety meeting if taken.

Safety questions/issues raised:	Actions/Follow-up needed:
1. NONE	
2.	
3.	
4.	
5.	
6.	

Remarks:

Meeting conducted by:

JOHN KAYKATE INDEED SAFETY

HEALTH AND SAFETY ACTIVITY REPORT

Site: Bulk Fuel Facility Expansion Location: KAFB

Weather Cond.: Cold Onsite Hours: From 7:00am To 3:00pm

Changes in PPE Levels[1]	Work Operations	Reasons for Change
No Changes		

Site Safety and Health Plan Violations	Corrective Action Specified	Corrective Action Taken [2](yes/no)
No Violations		

Observations and Comments:
All observation Good.

Completed by: John Kayate Indeed Safety Date: Nov 30, 2016
Site Health and Safety Supervisor

[1]Only SSHO may change PPE levels, using only criteria specified in APP/SSHP.
[2]If a deficiency is noted that cannot be immediately corrected, the SSHO will monitor the progress in correcting the deficiency and will document following:

- Date the deficiency was identified
- Description of the deficiency
- Name of the person responsible for correcting the deficiency
- Projected date of correction
- Actual date of correction.

DAILY REPORT

(ATTACH ADDITIONAL SHEETS IF NECESSARY)

CONTRACT NAME:	Kirtland AFB Bulk Fuels Facility Expansion of Dissolved Plume GWTS Design	REPORT NO:	36
CONTRACT NUMBER:	W912DR-12-D-0006	REPORT DATE:	01 DEC 16
REVISION NUMBER:	-	REVISION DATE:	-
TASK ORDER NUMBER:	DM01	PROJECT NAME / LOCATION:	KAFB, ABQ, NM
PROJECT NUMBER:	62599DM01	PROJECT DESCRIPTION:	KAFB GWTS Expansion
PROJECT MANAGER:	Devon Jercinovic	FIELD QUALITY MANAGER:	Kody Garcia
CONSTRUCTION MANAGER:	None Required	SITE SAFETY MANAGER:	John Kayate

AM WEATHER:	partially cloudy below freezing	PM WEATHER:	Sunny, cool	MAX TEMP (F):	41°		

SUMMARY OF WORK PERFORMED TODAY

Wiring preparation, grounding tanks, anchor GAC vessels to floor, anchor skids, conduit installation, ~~pekt~~ install light fixtures, install drain valves

HEALTH AND SAFETY REPORT

SAFETY ACTIONS TAKEN TODAY/SAFETY INSPECTIONS CONDUCTED (Include Observations, Safety Violations, Corrective Instructions Given, Corrective Actions Taken, and Results of Safety Inspections Conducted:

Observed safe work practices

TAILGATE TOPICS:

trip hazards, overhead hazards, fall protection, safety equipment

SAFE BEHAVIOR OBSERVATIONS/SELF-ASSESSMENTS:

Safe behavior monitored

OPERATIONS / PRODUCTION REPORT

WORK FORCE – CONTRACTOR AND SUBCONTRACTOR

Company	Cumulative Total of Work Hours From Previous Report	Total Hours Today	Total Work Hours From Start of Injection Event
Wilson	176	~~8~~ 16	192
Techsas	182	8	190
Mick Rich	162	5	167
Rupert	451	3	454

EQUIPMENT ON HAND

Description of Equipment	Make/Model/Manufacturer	Equipment ID Number	Inspection Performed By
Manlift	Genie GS-1930	10145036	Roberto Gurrola

COMMENTS (acceptance status, inspection findings, etc.):

OK

WORK AND/OR TESTS ACCOMPLISHED OR IN PROGRESS

Performed Work / Test for Today: Tanks anchored, skids anchored, conduit installed, light fixtures installed, drain valve installed,

Planned Work / Test for Tomorrow:

Wiring installation, tank and skid grounding

Planned Work / Test for Next Week:

magnetic flowmeter installation, Feed tank(s) wiring

CHANGED CONDITIONS/DELAY/CONFLICTS ENCOUNTERED (List any conflicts with the project [i.e., scope of work and/or drawings], delays to the project attributable to site and weather conditions, etc. no issues

VISITORS AND DISCUSSIONS: none

QUALITY CONTROL REPORT

MATERIALS DELIVERED TO JOB SITE

Quantity/Volume/ Weight	Description of Materials Received	Make/Model/Manufacturer	Material Lot Number	Inspection Performed By
300 ft	Pipe	EMT - 1/2" - EMT	98001002 001	Kody Garcia
320 ft	Wire	SS-THHN-2-BRN	19STR-CU-2500R	Kody Garcia
320 ft	Wire	SS-THHN-2-ORG	19STR-CU-2500R	Kody Garcia
320 ft	Wire	SS-THHN-2-YEL	19STR-CU-2500R	Kody Garcia

COMMENTS (acceptance status, inspection findings, etc.):

INSPECTIONS PERFORMED

Task/Activity Inspected	Inspection Performed	Findings
Conduit	visual inspection	OK
anchors	visual inspection	OK

TESTS PERFORMED

Task/Activity Tested	Test Performed	Test Results (Pass/Fail) - Criteria
none		

QUALITY ISSUES AND RESOLUTIONS:

SUBMITTALS INSPECTION / REVIEW

Submittal No.	Submittal Description	Specification/Plan Reference	Submittal Approved?		Comment/Reason/Action
NA	Daily Report	-	Yes ☐	No ☐	Pending
NA	SBO	-	Yes ☐	No ☐	Pending
NA	PTSP	-	Yes ☐	No ☐	Pending

REGULATORY COMPLIANCE REPORT

PERMIT INSPECTIONS PERFORMED: none

WASTE ACCUMULATION/STOCKPILE AREA INSPECTION

Inspection Performed By:	NA	Signature of Inspector:	
Accumulation / Stockpile Area Inspected:			

No of Bins:		No of Tankers		No of Roll-Off Boxes:		No. of Tanks	

Inspection Results:

NA

GENERAL COMMENTS

General Comments~ (rework, directives, etc.):	none

ATTACHMENTS

List of Attachments: (examples, as applicable: submittals, meeting minutes, safety meeting minutes, COCs, weight tickets, manifests, profiles, rework item list, RFIs, DCNs, photographs, etc.): Photo log and safety documentation

NOTE: Write all entries legibly in ink. Line out all unused portions or designate as "not applicable". Preparer signs first and last name on each completed daily report. This form may be filled out electronically and signed electronically.

Kody A. Garcia — PREPARER'S SIGNATURE

01DEC16 — DATE

Location: East Wall
Description: Newly Installed Conduit
Date: 01 December 2016 Direction: Southeast

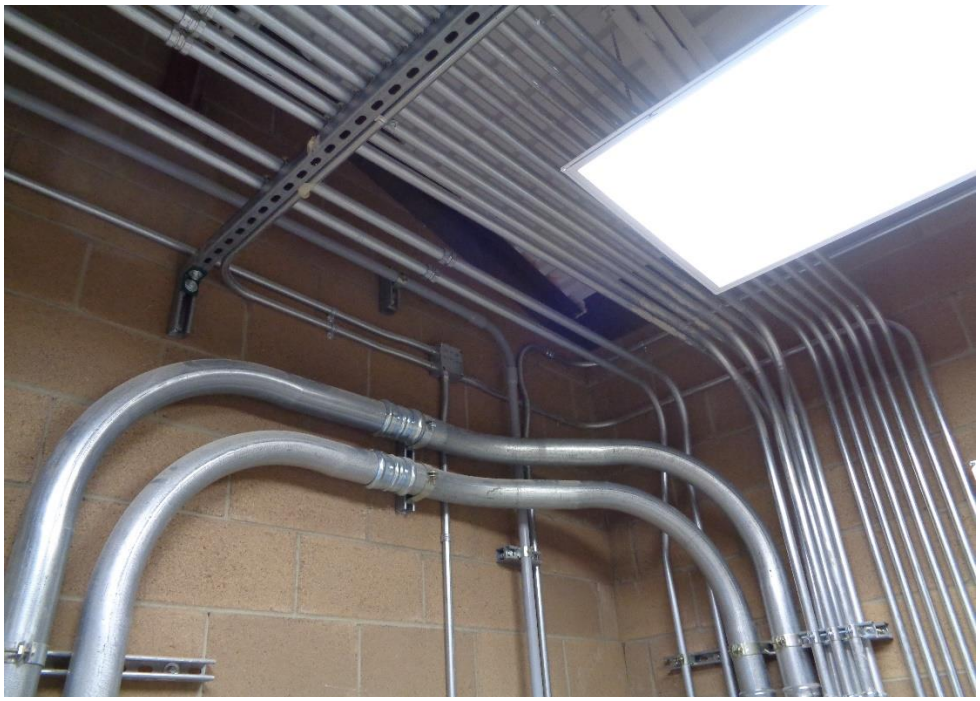

Location: HMI Room
Description: Newly Installed Conduit
Date: 01 December 2016 Direction: Northeast

Location: GWTS Ceiling
Description: Two Reinstalled Light Fixtures
Date: 01 December 2016 Direction: Up

Location: New Influent Feed Tank
Description: Newly Installed Ball Valve
Date: 01 December 2016 Direction: Northwest

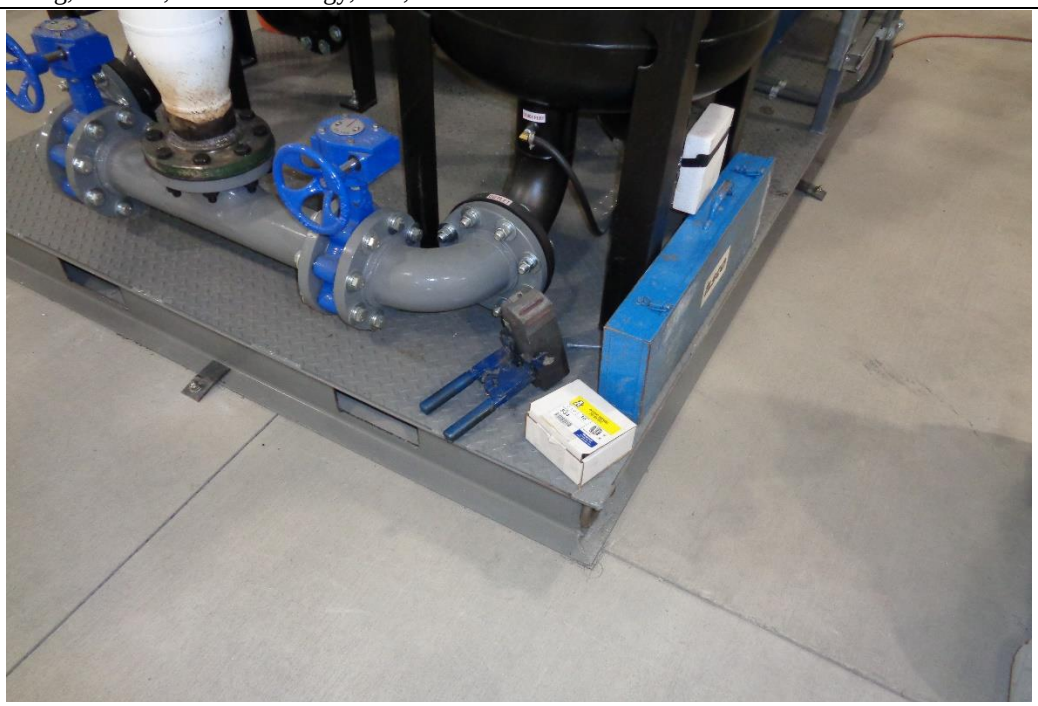

Location: New Influent Pump Skid
Description: Newly Installed Anchor Bolts
Date: 01 December 2016 Direction: Northwest

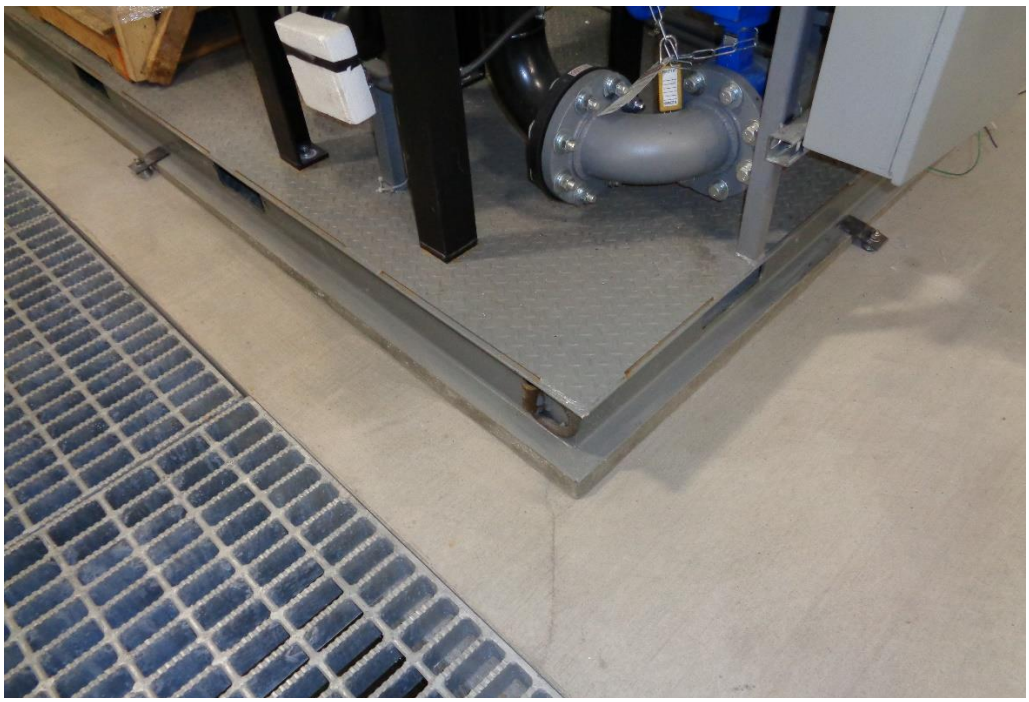

Location: New Effluent Pump Skid
Description: Newly Installed Anchor Bolts
Date: 01 December 2016 Direction: Northwest

Location: New Effluent and Influent Feed Tanks (Left to Right Respectively)
Description: Newly Installed Liquid Tight Conduit
Date: 01 December 2016 Direction: North

Location: New GAC Vessel (2nd From East Wall)
Description: Newly Installed Anchor Bolts
Date: 01 December 2016 Direction: Southeast

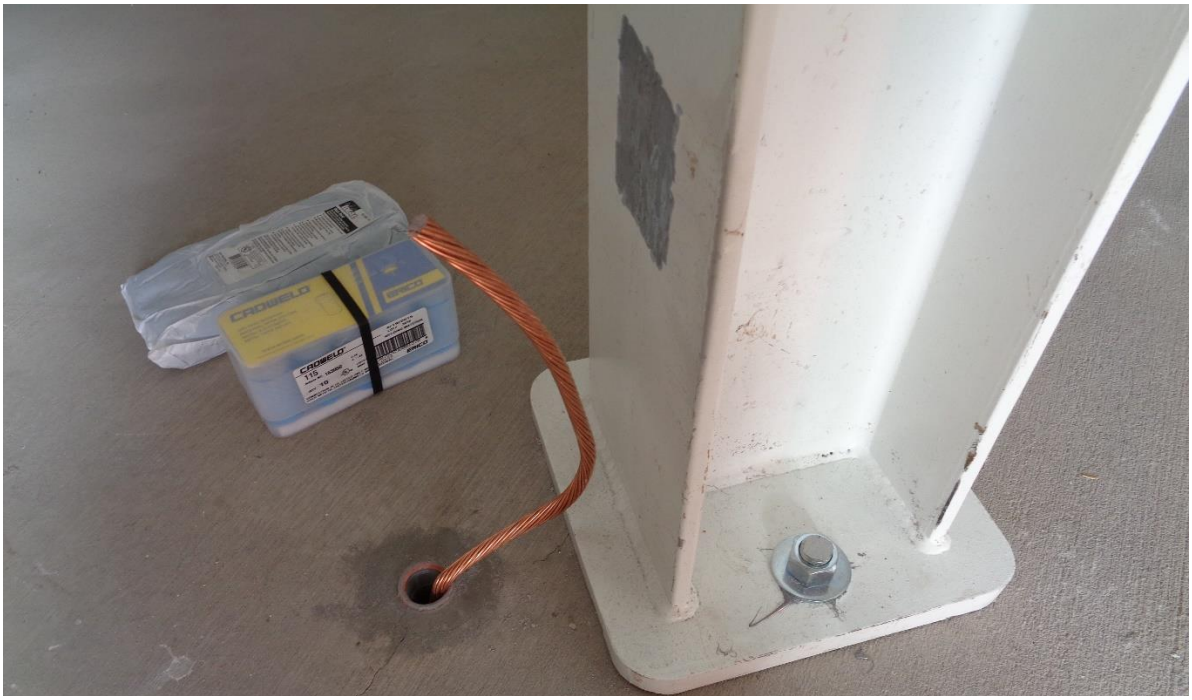

Location: New GAC Vessel (2nd From East Wall)
Description: Newly Installed Grounding Wire (In Progress)
Date: 01 December 2016 Direction: Northeast

Location: New GAC Vessel (1st from East Wall)
Description: Newly Installed Anchor Bolts
Date: 01 December 2016 Direction: West

Location: New GAC Vessel (1st from East Wall)
Description: Newly Installed Grounding Wire (In Progress)
Date: 01 December 2016 Direction: West

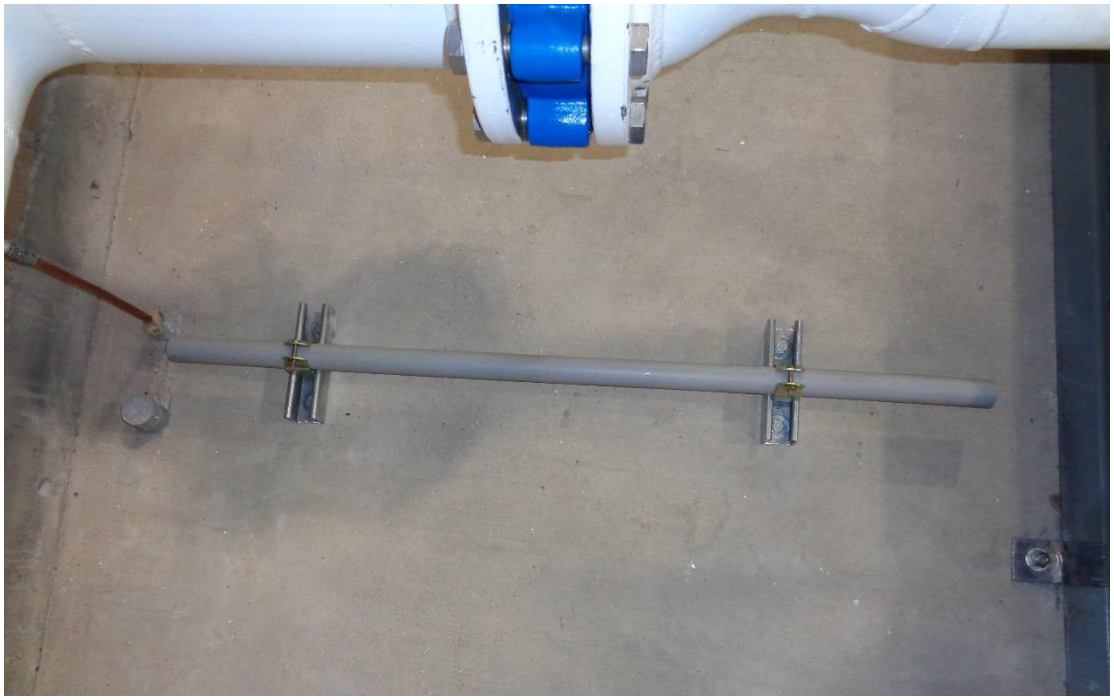

Location: New Influent Pump Skid
Description: Newly Installed Grounding Wire (In Progress)
Date: 01 December 2016 Direction: Down

EA Engineering, Science, and Technology, Inc.

DAILY SAFETY INSPECTION CHECKLIST
(TO BE COMPLETED EACH DAY OF CONSTRUCTION OR HTRW SITE ACTIVITIES)

Site: BULK FUEL FACILITY EXPAN. Prepared by SSHO: JOHN KAYATE
Location: KAFB Bldg 19150
Project No.: 625990 DM01 Project Manager: DEVON JERKOVIC
Client: USACE Date: 12/01/2016

Rating	Y	N	N/A	Comments/Immediate Corrective Action[1]
Accident Prevention Plan (APP) and Site Safety and Health Plan (SSHP) General Requirements				
Are there new onsite personnel? • Did they receive pre-entry briefing and are their names recorded in field logbook or daily log? • Was the USACE PM made aware of the new personnel. • Required training and medical surveillance documentation received (e.g., 40-hr, 8 hr, etc.)?		X	X X X	
Did personnel sign in/out of site?	X			
Daily tailgate safety meetings conducted and documented?	X			
Were new activities performed today? Were hazards identified, discussed during the daily safety tailgate, and incorporated into revised APP/SSHP?		X		
New materials brought on site? MSDSs available?		X		
Exclusion (EZ), Contamination Reduction (CRZ), and Support Zones (SZ) delineated and enforced?			X	
General housekeeping measures in place to prevent hazards?			X	
Emergency Planning				
Were there any changes to emergency contact names, telephone numbers, or hospital? If so, were site personnel made aware and was information distributed/reposted.		X		
Adequate safety equipment inventory available?	X			
Fire extinguisher available (monthly inspection of extinguisher will suffice)	X			
Eyewash station(s) functioning and in place (weekly inspection of eye wash station will suffice)?	X			
First aid supplies available (weekly inspection of first aid kit will suffice)?	X			
Communication equipment readily available for emergencies?	X			
Any reported accidents/incidents at this site? If so, were accident reporting procedures followed?		X		
Air Monitoring				
Monitoring equipment specified in SSHP available and in working order? Air monitoring instrumentation for this site includes – check each if required/on site, note deficiencies in comments: • Combustible gas meter • Organic vapor analyzer • Contaminant specific analyzer for benzene (if total organic vapor concentrations exceed 0.5 ppm)			X	
Monitoring equipment calibrated and calibration records			X	

Y = Satisfactory or Yes; N = Unsatisfactory or No, N/A = Not applicable

Rating	Y	N	N/A	Comments/Immediate Corrective Action[1]
available?			X	
Environmental and personnel monitoring performed as specified in SSHP?			X	
PPE				
Proper dermal protection worn by EA and subcontracted employees when handling/ contacting hazardous chemicals or contaminated environmental media?	X			
Required PPE (hard hats, safety boots / shoes, eye protection with side shields, hearing protection) being worn by EA and subcontracted employees?	X			
PPE inspection completed by SSHO?	X			
Drill Rig Operations				
Daily rig inspection completed? Any equipment problems?			X	
Drill rigs/elevated equipment maintaining minimum 10-ft distance from energized (50 kV) overhead power lines?			X	
Investigation-derived Waste (IDW)				
Wastes properly staged, secured, and labeled at end of day?			X	

Additional Comments:

Site Safety and Health Officer's Signature

Dec 1 2016

Date

[1]If a deficiency is noted that cannot be immediately corrected, the SSHO will monitor the progress in correcting the deficiency and will document following:

- Date the deficiency was identified
- Description of the deficiency
- Name of the person responsible for correcting the deficiency
- Projected date of correction
- Actual date of correction.

Y = Satisfactory or Yes; N = Unsatisfactory or No, N/A = Not applicable

EA ENGINEERING, SCIENCE AND TECHNOLOGY, INC.
SAFETY MEETING REPORT

Date: 12/01/2014	**Time:** 7.00 AM	**Duration of meeting:** 10 MIN.	**Project #** 625990.DM01
Location: KAFB Bldg 19150		**Task:** Install ground	

Type of meeting: X Daily ___ Weekly ___ Monthly ___ Other: _____

Items/Issues discussed:

1. 100% PPE
2. 100% TIE OFF OVER 6'
3. HOUSEKEEPING
4. Inspections on Equipment, Hand Tools
5.

Attach minutes of safety meeting if taken.

Safety questions/issues raised:	Actions/Follow-up needed:
1. How Wilson was going to tie into panel	
2. drill on top and side, shut down	
3. Panel.	
4.	
5.	
6.	

Remarks:
It was decided that all wire be pulled to panel Ready to go. so panel can only be shut down one time.

Meeting conducted by:
John Kayate

HEALTH AND SAFETY ACTIVITY REPORT

Site: Bulk Fuel Facility Expansion Location: KAFB

Weather Cond.: Cold Onsite Hours: From 7:00 To _____

Changes in PPE Levels[1]	Work Operations	Reasons for Change
No Changes		

Site Safety and Health Plan Violations	Corrective Action Specified	Corrective Action Taken [2](yes/no)
No Violations		

Observations and Comments:

All Observation Good

Completed by: John Kuyath Date: Dec 1, 2014
Site Health and Safety Supervisor

[1]Only SSHO may change PPE levels, using only criteria specified in APP/SSHP.
[2]If a deficiency is noted that cannot be immediately corrected, the SSHO will monitor the progress in correcting the deficiency and will document following:

- Date the deficiency was identified
- Description of the deficiency
- Name of the person responsible for correcting the deficiency
- Projected date of correction
- Actual date of correction.

DAILY REPORT

(ATTACH ADDITIONAL SHEETS IF NECESSARY)

CONTRACT NAME:	Kirtland AFB Bulk Fuels Facility Expansion of Dissolved Plume GWTS Design	REPORT NO:	37
CONTRACT NUMBER:	W912DR-12-D-0006	REPORT DATE:	02 DEC 16
REVISION NUMBER:	-	REVISION DATE:	-
TASK ORDER NUMBER:	DM01	PROJECT NAME / LOCATION:	KAFB, ABQ, NM
PROJECT NUMBER:	62599DM01	PROJECT DESCRIPTION:	KAFB GWTS Expansion
PROJECT MANAGER:	Devon Jercinovic	FIELD QUALITY MANAGER:	Kody Garcia
CONSTRUCTION MANAGER:	Tyler Curley	SITE SAFETY MANAGER:	John Kayate

AM WEATHER:	Windy / Cloudy / Cold	PM WEATHER:	Windy, Cloudy	MAX TEMP (F):	46°		

SUMMARY OF WORK PERFORMED TODAY

Wiring installation, grounding tanks, valve installation, U-bolt installation

HEALTH AND SAFETY REPORT

SAFETY ACTIONS TAKEN TODAY/SAFETY INSPECTIONS CONDUCTED (Include Observations, Safety Violations, Corrective Instructions Given, Corrective Actions Taken, and Results of Safety Inspections Conducted:

Observed safe work practices

TAILGATE TOPICS: Lift safety

Fire extinguisher and eyewash locations, slips/trips/falls, PPE, food/drink

SAFE BEHAVIOR OBSERVATIONS/SELF-ASSESSMENTS:

Safe behavior observed all day

OPERATIONS / PRODUCTION REPORT

WORK FORCE – CONTRACTOR AND SUBCONTRACTOR

Company	Cumulative Total of Work Hours From Previous Report	Total Hours Today	Total Work Hours From Start of Injection Event
Wilson	192	16	208
Techsas	190	8	198
Mick Rich	167	8	175
Rupert	454	7	461

EQUIPMENT ON HAND

Description of Equipment	Make/Model/Manufacturer	Equipment ID Number	Inspection Performed By
Manlift #1	Genie GS-1930		Andres Porras
Manlift #2	Genie GS-1930	1014 5036	Roberto Gurrola

COMMENTS (acceptance status, inspection findings, etc.):

OK

WORK AND/OR TESTS ACCOMPLISHED OR IN PROGRESS

Performed Work / Test for Today: Tanks grounded

Wiring installation, U-bolt installations, ball valve installation

Planned Work / Test for Tomorrow:

no work planned

Planned Work / Test for Next Week:

Magnetic flow meter installation, Influent/Effluent Tank wiring

CHANGED CONDITIONS/DELAY/CONFLICTS ENCOUNTERED (List any conflicts with the project [i.e., scope of work and/or drawings], delays to the project attributable to site and weather conditions, etc. no issues

VISITORS AND DISCUSSIONS:

none

QUALITY CONTROL REPORT

MATERIALS DELIVERED TO JOB SITE

Quantity/Volume/ Weight	Description of Materials Received	Make/Model/Manufacturer	Material Lot Number	Inspection Performed By
NA				

COMMENTS (acceptance status, inspection findings, etc.):

INSPECTIONS PERFORMED

Task/Activity Inspected	Inspection Performed	Findings
grounding wire	visual inspection	OK
U-bolts	visual inspection	OK

TESTS PERFORMED

Task/Activity Tested	Test Performed	Test Results (Pass/Fail) - Criteria
none		

QUALITY ISSUES AND RESOLUTIONS:

SUBMITTALS INSPECTION / REVIEW

Submittal No.	Submittal Description	Specification/Plan Reference	Submittal Approved?		Comment/Reason/Action
NA	Daily Report	_	Yes ☐	No ☐	Pending
NA	SBO	_	Yes ☐	No ☐	Pending
NA	PTSP	_	Yes ☐	No ☐	Pending

REGULATORY COMPLIANCE REPORT

PERMIT INSPECTIONS PERFORMED: none

WASTE ACCUMULATION/STOCKPILE AREA INSPECTION

Inspection Performed By:	NA		Signature of Inspector:				
Accumulation / Stockpile Area Inspected:							
No of Bins:		No of Tankers		No of Roll-Off Boxes:		No. of Tanks	

Inspection Results: NA

GENERAL COMMENTS

General Comments~ (rework, directives, etc.):

none

ATTACHMENTS

List of Attachments: (examples, as applicable: submittals, meeting minutes, safety meeting minutes, COCs, weight tickets, manifests, profiles, rework item list, RFIs, DCNs, photographs, etc.): Photo log and safety documentation

NOTE: Write all entries legibly in ink. Line out all unused portions or designate as "not applicable". Preparer signs first and last name on each completed daily report. This form may be filled out electronically and signed electronically.

Kody A. Garus — PREPARER'S SIGNATURE

02DEC16 — DATE

Location: New Effluent Pump Skid
Description: Newly Installed U-Bolt
Date: 02 December 2016 Direction: Northeast

Location: New GAC Vessel (2nd From East Wall)
Description: Hex Bolts Removed for Upcoming Inspection
Date: 02 December 2016 Direction: South

Location: New GAC Vessel (1st from East Wall)
Description: Hex Bolts Removed for Upcoming Inspection
Date: 02 December 2016 Direction: South

Location: New Effluent Feed Tank
Description: Newly Installed Ball Valve
Date: 02 December 2016 Direction: Northwest

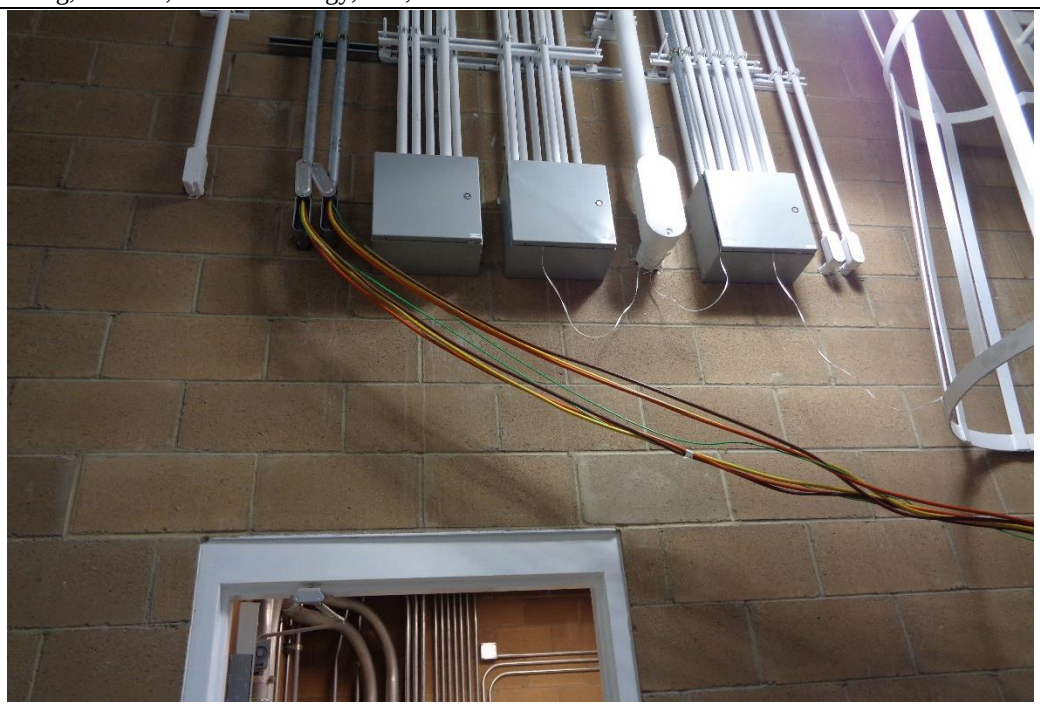

Location: East Wall
Description: Newly Installed Wiring (In Progress)
Date: 02 December 2016 Direction: East

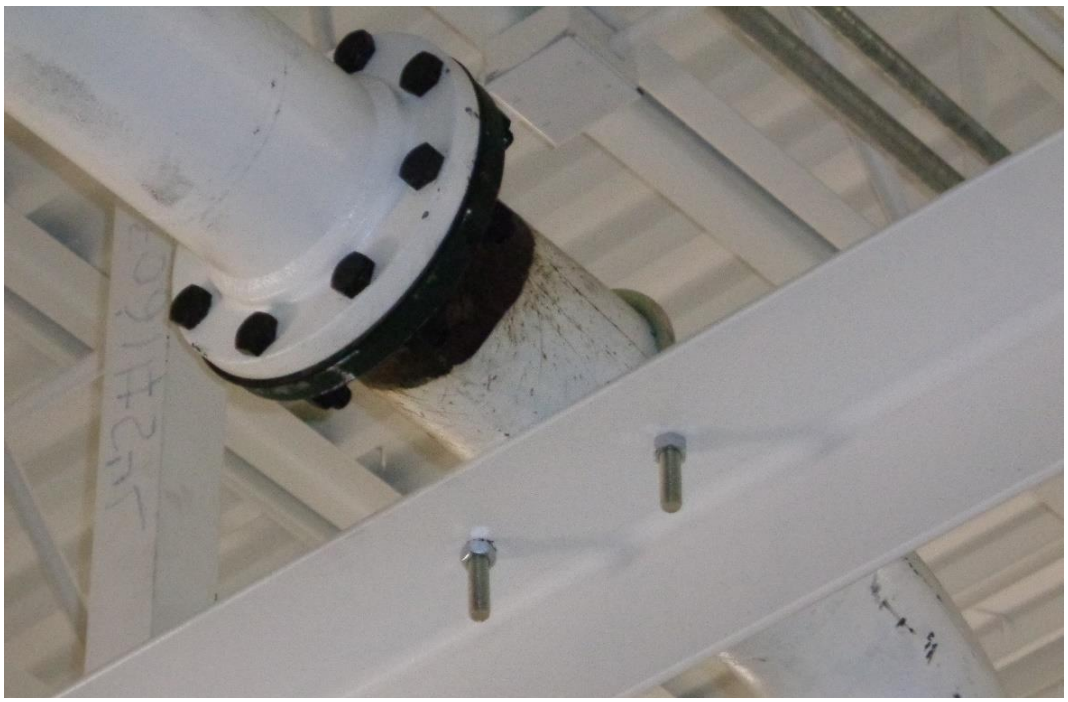

Location: Above New Influent Pump Skid
Description: Newly Installed U-Bolt
Date: 02 December 2016 Direction: Up

Location: Above New GAC Vessels
Description: Newly Installed U-Bolts
Date: 02 December 2016 Direction: Up

Location: Between Old GAC Vessels and South Wall
Description: Newly Installed U-Bolt
Date: 02 December 2016 Direction: Up

Location: New GAC Vessel (1st from East Wall)
Description: Newly Installed Grounding Wire
Date: 02 December 2016 Direction: Southwest

Location: New GAC Vessel (2nd from East Wall)
Description: Newly Installed Grounding Wire
Date: 02 December 2016 Direction: Southeast

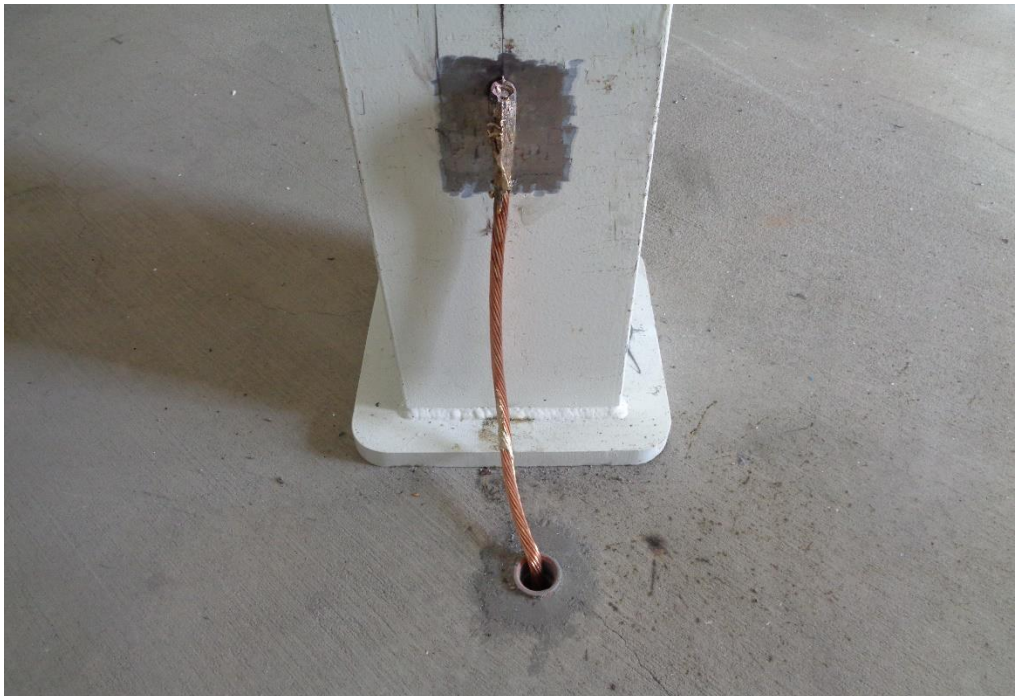

Location: New GAC Vessel (2nd from East Wall)
Description: Newly Installed Grounding Wire
Date: 02 December 2016 Direction: North

Location: Above New GAC Vessel (1st from East Wall)
Description: Newly Installed U-Bolt
Date: 02 December 2016 Direction: Up

EA Engineering, Science, and Technology, Inc.

DAILY SAFETY INSPECTION CHECKLIST (TO BE COMPLETED EACH DAY OF CONSTRUCTION OR HTRW SITE ACTIVITIES)

Site: Bulk Fuel Facility Expan.
Location: KAFB Bldg 19150
Project No.: 625990 DM01
Client: USACE

Prepared by SSHO: John Kayate
Project Manager: Devon Jencewicz
Date: 12/02/2016

Rating	Y	N	N/A	Comments/Immediate Corrective Action[1]
Accident Prevention Plan (APP) and Site Safety and Health Plan (SSHP) General Requirements				
Are there new onsite personnel? • Did they receive pre-entry briefing and are their names recorded in field logbook or daily log? • Was the USACE PM made aware of the new personnel. • Required training and medical surveillance documentation received (e.g., 40-hr, 8 hr, etc.)?		X	X X X	
Did personnel sign in/out of site?	X			
Daily tailgate safety meetings conducted and documented?	X			
Were new activities performed today? Were hazards identified, discussed during the daily safety tailgate, and incorporated into revised APP/SSHP?		X		
New materials brought on site? MSDSs available?		X		
Exclusion (EZ), Contamination Reduction (CRZ), and Support Zones (SZ) delineated and enforced?			X	
General housekeeping measures in place to prevent hazards?			X	
Emergency Planning				
Were there any changes to emergency contact names, telephone numbers, or hospital? If so, were site personnel made aware and was information distributed/reposted.		X		
Adequate safety equipment inventory available?	X			
Fire extinguisher available (monthly inspection of extinguisher will suffice)	X			
Eyewash station(s) functioning and in place (weekly inspection of eye wash station will suffice)?	X			
First aid supplies available (weekly inspection of first aid kit will suffice)?	X			
Communication equipment readily available for emergencies?	X			
Any reported accidents/incidents at this site? If so, were accident reporting procedures followed?		X		
Air Monitoring				
Monitoring equipment specified in SSHP available and in working order? Air monitoring instrumentation for this site includes – check each if required/on site, note deficiencies in comments: • Combustible gas meter • Organic vapor analyzer • Contaminant specific analyzer for benzene (if total organic vapor concentrations exceed 0.5 ppm)			X	
Monitoring equipment calibrated and calibration records			X	

Y = Satisfactory or Yes; N = Unsatisfactory or No, N/A = Not applicable

Rating	Y	N	N/A	Comments/Immediate Corrective Action[1]
available?			X	
Environmental and personnel monitoring performed as specified in SSHP?			X	
PPE				
Proper dermal protection worn by EA and subcontracted employees when handling/ contacting hazardous chemicals or contaminated environmental media?	X			
Required PPE (hard hats, safety boots / shoes, eye protection with side shields, hearing protection) being worn by EA and subcontracted employees?	X			
PPE inspection completed by SSHO?	X			
Drill Rig Operations				
Daily rig inspection completed? Any equipment problems?			X	
Drill rigs/elevated equipment maintaining minimum 10-ft distance from energized (50 kV) overhead power lines?			X	
Investigation-derived Waste (IDW)				
Wastes properly staged, secured, and labeled at end of day?			Y	

Additional Comments:

John Kazalo
Site Safety and Health Officer's Signature

Dec 2 2014
Date

[1]If a deficiency is noted that cannot be immediately corrected, the SSHO will monitor the progress in correcting the deficiency and will document following:

- Date the deficiency was identified
- Description of the deficiency
- Name of the person responsible for correcting the deficiency
- Projected date of correction
- Actual date of correction.

Y = Satisfactory or Yes; N = Unsatisfactory or No, N/A = Not applicable

EA ENGINEERING, SCIENCE AND TECHNOLOGY, INC.
SAFETY MEETING REPORT

Date: 12/02/2016	**Time:** 7:00	**Duration of meeting:** 10 MIN	**Project #** 6259900 MO1
Location: KAFB Bldg ~~#~~ 19150		**Task:** INSTALL ground pull wire (WILSON) High point Vent. Braces (Repeat)	

Type of meeting: X Daily ___Weekly ___ Monthly ___ Other: _____

Items/Issues discussed:

1. Scope of work — 100% TIE OFF
2. staying Focus — 100% PPE
3. House Keeping
4.
5.

Attach minutes of safety meeting if taken.

Safety questions/issues raised:	Actions/Follow-up needed:
1. NONE	
2.	
3.	
4.	
5.	
6.	

Remarks:

Meeting conducted by:
John Kynate

HEALTH AND SAFETY ACTIVITY REPORT

Site: Bulk Fuel Facility Expansion Location: KAFB Bldg 19150

Weather Cond.: Cold, Windy Onsite Hours: From 0700 To 1500

Changes in PPE Levels[1]	Work Operations	Reasons for Change
No changes		

Site Safety and Health Plan Violations	Corrective Action Specified	Corrective Action Taken [2](yes/no)
No Violations		

Observations and Comments:

All Observations Good

Completed by: Jason Kayata Date: Dec 2, 2014
Site Health and Safety Supervisor

[1]Only SSHO may change PPE levels, using only criteria specified in APP/SSHP.
[2]If a deficiency is noted that cannot be immediately corrected, the SSHO will monitor the progress in correcting the deficiency and will document following:

- Date the deficiency was identified
- Description of the deficiency
- Name of the person responsible for correcting the deficiency
- Projected date of correction
- Actual date of correction.

DAILY REPORT

(ATTACH ADDITIONAL SHEETS IF NECESSARY)

CONTRACT NAME:	Kirtland AFB Bulk Fuels Facility Expansion of Dissolved Plume GWTS Design	REPORT NO:	38
CONTRACT NUMBER:	W912DR-12-D-0006	REPORT DATE:	05DEC16
REVISION NUMBER:	-	REVISION DATE:	-
TASK ORDER NUMBER:	DM01	PROJECT NAME / LOCATION:	KAFB, ABQ, NM
PROJECT NUMBER:	62599DM01	PROJECT DESCRIPTION:	KAFB GWTS Expansion
PROJECT MANAGER:	Devon Jercinovic	FIELD QUALITY MANAGER:	Kody Garcia
CONSTRUCTION MANAGER:	Alex Spiller	SITE SAFETY MANAGER:	John Kayate

AM WEATHER:	partially cloudy Cold	PM WEATHER:	partially cloudy	MAX TEMP (F):	51°		

SUMMARY OF WORK PERFORMED TODAY

Welding and installation of piping, magnetic flow meter installation

HEALTH AND SAFETY REPORT

SAFETY ACTIONS TAKEN TODAY/SAFETY INSPECTIONS CONDUCTED (Include Observations, Safety Violations, Corrective Instructions Given, Corrective Actions Taken, and Results of Safety Inspections Conducted:

Observed safe work practices

TAILGATE TOPICS:

Welding safety, overhead hazards, PPE, lift safety, slips/trips/falls

SAFE BEHAVIOR OBSERVATIONS/SELF-ASSESSMENTS:

Safe behavior monitored

OPERATIONS / PRODUCTION REPORT

WORK FORCE – CONTRACTOR AND SUBCONTRACTOR

Company	Cumulative Total of Work Hours From Previous Report	Total Hours Today	Total Work Hours From Start of Injection Event
Rupert	461	24	485
Techsas	182	4	186

EQUIPMENT ON HAND

Description of Equipment	Make/Model/Manufacturer	Equipment ID Number	Inspection Performed By
Manlift	Genie GS-1930		Andres Porras
DC Welder	Miller Pipe Pro 304	LH011 3526	John Kayate

COMMENTS (acceptance status, inspection findings, etc.):

OK

WORK AND/OR TESTS ACCOMPLISHED OR IN PROGRESS

Performed Work / Test for Today: Welded flanges and installed piping section on influent skid discharge line. Magnetic flow meter installation

Planned Work / Test for Tomorrow:

Inspection of GAC vessels by Calgon

Planned Work / Test for Next Week:

Install magnetic flow meters, pulling of electrical wiring through conduit

CHANGED CONDITIONS/DELAY/CONFLICTS ENCOUNTERED (List any conflicts with the project [i.e., scope of work and/or drawings], delays to the project attributable to site and weather conditions, etc. no issues

VISITORS AND DISCUSSIONS: none

QUALITY CONTROL REPORT

MATERIALS DELIVERED TO JOB SITE

Quantity/Volume/ Weight	Description of Materials Received	Make/Model/Manufacturer	Material Lot Number	Inspection Performed By
3	Slip flanges	~~SA 106 A57 KG~~		Kody Garcia
2	Spool pipes	SA 106 AST		Kody Garcia

COMMENTS (acceptance status, inspection findings, etc.): NA

INSPECTIONS PERFORMED

Task/Activity Inspected	Inspection Performed	Findings
flange weld	visual inspection	OK
magnetic flowmeter	visual inspection	OK

TESTS PERFORMED

Task/Activity Tested	Test Performed	Test Results (Pass/Fail) - Criteria
none		

QUALITY ISSUES AND RESOLUTIONS: NA

SUBMITTALS INSPECTION / REVIEW

Submittal No.	Submittal Description	Specification/Plan Reference	Submittal Approved?		Comment/Reason/Action
NA	Daily Report	_	Yes ☐	No ☐	Pending
NA	SBO	_	Yes ☐	No ☐	Pending
NA	PTSP	_	Yes ☐	No ☐	Pending

REGULATORY COMPLIANCE REPORT

PERMIT INSPECTIONS PERFORMED: none

WASTE ACCUMULATION/STOCKPILE AREA INSPECTION

Inspection Performed By:	NA		Signature of Inspector:				
Accumulation / Stockpile Area Inspected:							
No of Bins:		No of Tankers		No of Roll-Off Boxes:		No. of Tanks	

Inspection Results: NA

GENERAL COMMENTS

General Comments~ (rework, directives, etc.): None

ATTACHMENTS

List of Attachments: (examples, as applicable: submittals, meeting minutes, safety meeting minutes, COCs, weight tickets, manifests, profiles, rework item list, RFIs, DCNs, photographs, etc.): Photo log and safety documentation

NOTE: Write all entries legibly in ink. Line out all unused portions or designate as "not applicable". Preparer signs first and last name on each completed daily report. This form may be filled out electronically and signed electronically.

Kady A. Garcia — PREPARER'S SIGNATURE

05DEC16 — DATE

Location: Influent Pump Skids
Description: Slip Flanges and Spool Pipes Delivered to Site
Date: 05 December 2016 Direction: Down

Location: New Influent Skid Pump
Description: Newly Installed Magnetic Flow Meter
Date: 05 December 2016 Direction: North

EA Engineering, Science, and Technology, Inc.

DAILY SAFETY INSPECTION CHECKLIST (TO BE COMPLETED EACH DAY OF CONSTRUCTION OR HTRW SITE ACTIVITIES)

Site: Bulk Fuel Facility Expansion
Location: KAFB Bldg 19150
Project No.: 625990 DM01
Client: USACE

Prepared by SSHO: John Kamyate
Project Manager: Devon Jerabkowic
Date: 12/05/2014

Rating	Y	N	N/A	Comments/Immediate Corrective Action[1]
Accident Prevention Plan (APP) and Site Safety and Health Plan (SSHP) General Requirements				
Are there new onsite personnel? • Did they receive pre-entry briefing and are their names recorded in field logbook or daily log? • Was the USACE PM made aware of the new personnel. • Required training and medical surveillance documentation received (e.g., 40-hr, 8 hr, etc.)?		X	X X X	
Did personnel sign in/out of site?	X			
Daily tailgate safety meetings conducted and documented?	X			
Were new activities performed today? Were hazards identified, discussed during the daily safety tailgate, and incorporated into revised APP/SSHP?		X		
New materials brought on site? MSDSs available?		X		
Exclusion (EZ), Contamination Reduction (CRZ), and Support Zones (SZ) delineated and enforced?			X	
General housekeeping measures in place to prevent hazards?			X	
Emergency Planning				
Were there any changes to emergency contact names, telephone numbers, or hospital? If so, were site personnel made aware and was information distributed/reposted.		X		
Adequate safety equipment inventory available?	X			
Fire extinguisher available (monthly inspection of extinguisher will suffice)	X			
Eyewash station(s) functioning and in place (weekly inspection of eye wash station will suffice)?	X			
First aid supplies available (weekly inspection of first aid kit will suffice)?	X			
Communication equipment readily available for emergencies?	X			
Any reported accidents/incidents at this site? If so, were accident reporting procedures followed?		X		
Air Monitoring				
Monitoring equipment specified in SSHP available and in working order? Air monitoring instrumentation for this site includes – check each if required/on site, note deficiencies in comments: • Combustible gas meter • Organic vapor analyzer • Contaminant specific analyzer for benzene (if total organic vapor concentrations exceed 0.5 ppm)			X	
Monitoring equipment calibrated and calibration records			X	

Y = Satisfactory or Yes; N = Unsatisfactory or No, N/A = Not applicable

Rating	Y	N	N/A	Comments/Immediate Corrective Action[1]
available?			X	
Environmental and personnel monitoring performed as specified in SSHP?			X	
PPE				
Proper dermal protection worn by EA and subcontracted employees when handling/ contacting hazardous chemicals or contaminated environmental media?	X			
Required PPE (hard hats, safety boots / shoes, eye protection with side shields, hearing protection) being worn by EA and subcontracted employees?	X			
PPE inspection completed by SSHO?	X			
Drill Rig Operations				
Daily rig inspection completed? Any equipment problems?			X	
Drill rigs/elevated equipment maintaining minimum 10-ft distance from energized (50 kV) overhead power lines?			X	
Investigation-derived Waste (IDW)				
Wastes properly staged, secured, and labeled at end of day?			X	

Additional Comments:

John Kenyatta
Site Safety and Health Officer's Signature

Dec 3 2014
Date

[1]If a deficiency is noted that cannot be immediately corrected, the SSHO will monitor the progress in correcting the deficiency and will document following:

- Date the deficiency was identified
- Description of the deficiency
- Name of the person responsible for correcting the deficiency
- Projected date of correction
- Actual date of correction.

EA ENGINEERING, SCIENCE AND TECHNOLOGY, INC.
SAFETY MEETING REPORT

Date: 12/05/2016	**Time:** 7:00	**Duration of meeting:** 10 min	**Project #** 62599.0DM01
Location: KAFB Bldg 19150		**Task:** INSTALL PIPE, WELDING, PRESSURE TEST	

Type of meeting: X Daily ___ Weekly ___ Monthly ___ Other:_____

Items/Issues discussed:

1. Refocus
2. Scope of work
3. Waste water drums Bellz dropped off and Dump
4. Housekeeping
5. Muster Area

Attach minutes of safety meeting if taken.

Safety questions/issues raised:	Actions/Follow-up needed:
1. None	
2.	
3.	
4.	
5.	
6.	

Remarks:

Meeting conducted by:
John Kuyatt

HEALTH AND SAFETY ACTIVITY REPORT

Site: Bulk Fuel Facility Expansion Location: _____

Weather Cond.: Mild Onsite Hours: From _____ To _____

Changes in PPE Levels[1]	Work Operations	Reasons for Change
No changes		

Site Safety and Health Plan Violations	Corrective Action Specified	Corrective Action Taken [2](yes/no)
No Violations		

Observations and Comments:
All observation good

Completed by: John Kayak Date: Dec 5 2014
Site Health and Safety Supervisor

[1]Only SSHO may change PPE levels, using only criteria specified in APP/SSHP.
[2]If a deficiency is noted that cannot be immediately corrected, the SSHO will monitor the progress in correcting the deficiency and will document following:

- Date the deficiency was identified
- Description of the deficiency
- Name of the person responsible for correcting the deficiency
- Projected date of correction
- Actual date of correction.

DAILY REPORT

(ATTACH ADDITIONAL SHEETS IF NECESSARY)

CONTRACT NAME:	Kirtland AFB Bulk Fuels Facility Expansion of Dissolved Plume GWTS Design	REPORT NO:	39
CONTRACT NUMBER:	W912DR-12-D-0006	REPORT DATE:	06DEC16
REVISION NUMBER:	-	REVISION DATE:	-
TASK ORDER NUMBER:	DM01	PROJECT NAME / LOCATION:	KAFB, ABQ, NM
PROJECT NUMBER:	62599DM01	PROJECT DESCRIPTION:	KAFB GWTS Expansion
PROJECT MANAGER:	Devon Jercinovic	FIELD QUALITY MANAGER:	Alex Spiller
CONSTRUCTION MANAGER:	Alex Spiller	SITE SAFETY MANAGER:	John Kayote

AM WEATHER:	cloudy, cold breezy	PM WEATHER:	cloudy, breezy cold	MAX TEMP (F):	49°	

SUMMARY OF WORK PERFORMED TODAY

Install ARV piping, inspect 2 new GAC vessels

HEALTH AND SAFETY REPORT

SAFETY ACTIONS TAKEN TODAY/SAFETY INSPECTIONS CONDUCTED (Include Observations, Safety Violations, Corrective Instructions Given, Corrective Actions Taken, and Results of Safety Inspections Conducted: None

TAILGATE TOPICS: Lift Safety, scope of work, Muster area, confined space, pinch points, housekeeping

SAFE BEHAVIOR OBSERVATIONS/SELF-ASSESSMENTS:

Safe Behavior Observed

OPERATIONS / PRODUCTION REPORT

WORK FORCE – CONTRACTOR AND SUBCONTRACTOR

Company	Cumulative Total of Work Hours From Previous Report	Total Hours Today	Total Work Hours From Start of Injection Event
Rupert	485	7	492
Techsas	186	3	189
Colgan	0	2	2

EQUIPMENT ON HAND

Description of Equipment	Make/Model/Manufacturer	Equipment ID Number	Inspection Performed By
Manlift	GS-1930 Genie		Andres Poras

COMMENTS (acceptance status, inspection findings, etc.):

OK

WORK AND/OR TESTS ACCOMPLISHED OR IN PROGRESS

Performed Work / Test for Today: installed ARV piping, inspected GAC vessels

Planned Work / Test for Tomorrow:
Finish ARV piping, install various pipe components

Planned Work / Test for Next Week:
carbo- delivery, piping and wiring

CHANGED CONDITIONS/DELAY/CONFLICTS ENCOUNTERED (List any conflicts with the project [i.e., scope of work and/or drawings], delays to the project attributable to site and weather conditions, etc.

VISITORS AND DISCUSSIONS: USACE Amy Sanchez and Mark Phoneuff

QUALITY CONTROL REPORT

MATERIALS DELIVERED TO JOB SITE

Quantity/Volume/ Weight	Description of Materials Received	Make/Model/Manufacturer	Material Lot Number	Inspection Performed By
~~None~~ 2	6" Hoses w/camlocks 75'	Duraflex		ASpilk
2	50' Air Hoses 3/4"	unisource		ASpilk

COMMENTS (acceptance status, inspection findings, etc.):

INSPECTIONS PERFORMED

Task/Activity Inspected	Inspection Performed	Findings
David Kwedes	visual internal/external GAC inspection	OK

TESTS PERFORMED

Task/Activity Tested	Test Performed	Test Results (Pass/Fail) - Criteria
hydrostatic Test	100 psi test (influent skid to GACs)	Pass

QUALITY ISSUES AND RESOLUTIONS:

SUBMITTALS INSPECTION / REVIEW

Submittal No.	Submittal Description	Specification/Plan Reference	Submittal Approved?		Comment/Reason/Action
NA	Daily Report	–	Yes ☐	No ☐	Pending
NA	SBO	–	Yes ☐	No ☐	Pending
NA	PTSP	–	Yes ☐	No ☐	Pending

REGULATORY COMPLIANCE REPORT

PERMIT INSPECTIONS PERFORMED: None

WASTE ACCUMULATION/STOCKPILE AREA INSPECTION

Inspection Performed By:		Signature of Inspector:	
Accumulation / Stockpile Area Inspected:	NA		

No of Bins:		No of Tankers		No of Roll-Off Boxes:		No. of Tanks	

Inspection Results: NA

GENERAL COMMENTS

General Comments~ (rework, directives, etc.):
ATTACHMENTS
List of Attachments: (examples, as applicable: submittals, meeting minutes, safety meeting minutes, COCs, weight tickets, manifests, profiles, rework item list, RFIs, DCNs, photographs, etc.): Safety documentation and photology
NOTE: Write all entries legibly in ink. Line out all unused portions or designate as "not applicable". Preparer signs first and last name on each completed daily report. This form may be filled out electronically and signed electronically. Alex Spill (PREPARER'S SIGNATURE) 6 DEC 16 (DATE)

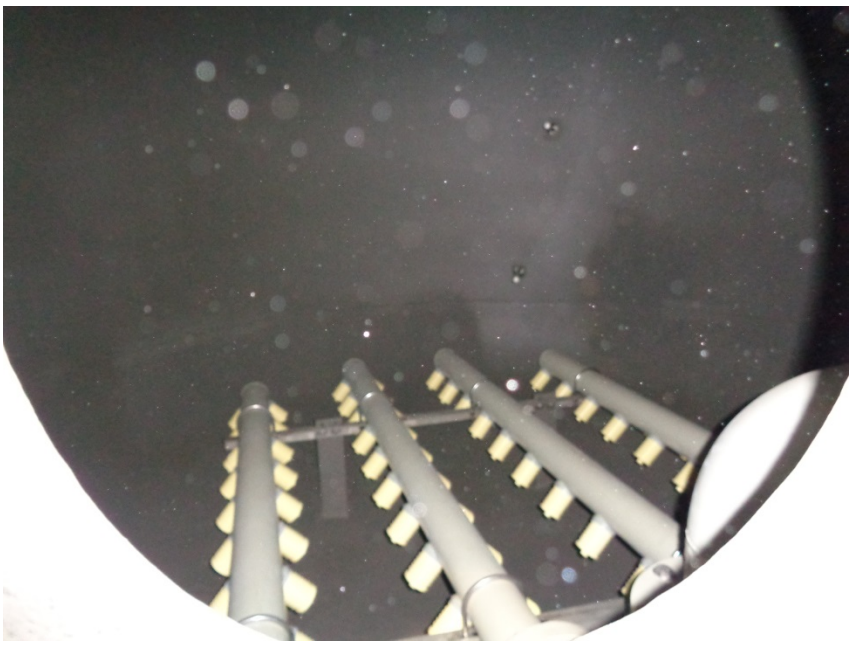

Location: Easternmost New GAC Vessel
Description: Inside GAC Vessel
Date: 6 December 2016 Direction: South

Location: Easternmost New GAC Vessel
Description: Inside GAC Vessel
Date: 6 December 2016 Direction: Up

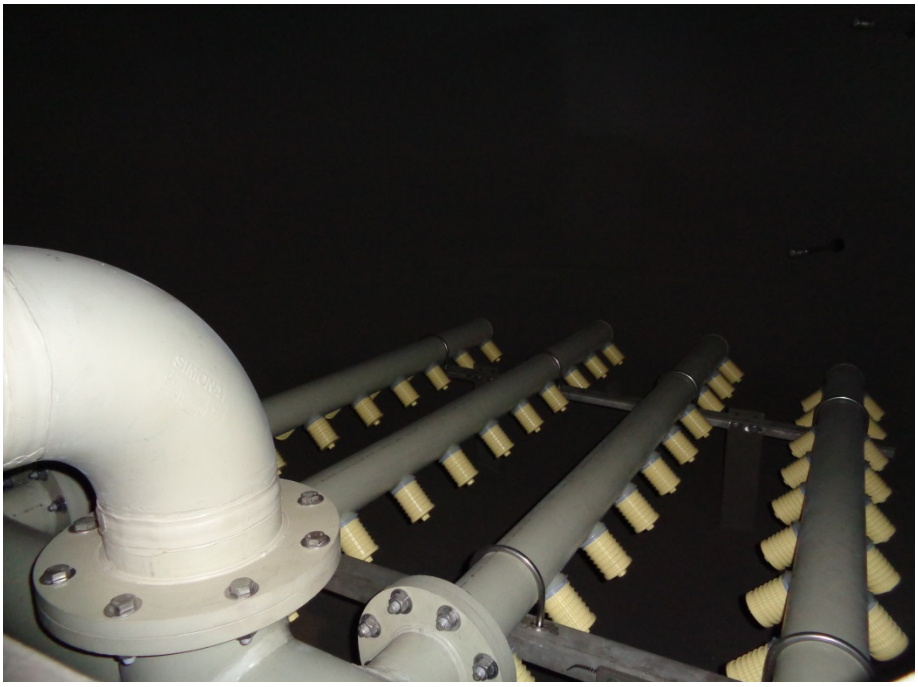

Location: Westernmost New GAC Vessel
Description: Inside GAC Vessel
Date: 6 December 2016 Direction: South

Location: Westernmost New GAC Vessel
Description: Inside GAC Vessel
Date: 6 December 2016 Direction: Up

Location: Groundwater Treatment System Floor
Description: Newly Delivered Hoses for GAC Installation
Date: 6 December 2016 Direction: Down

Location: Above Easternmost GAC Vessel
Description: Newly Installed ARV Piping
Date: 6 December 2016 Direction: Up

Location: Above Newly Installed Influent Pump Skid
Description: Newly Installed ARV Piping
Date: 6 December 2016 Direction: North

EA Engineering, Science, and Technology, Inc.

DAILY SAFETY INSPECTION CHECKLIST (TO BE COMPLETED EACH DAY OF CONSTRUCTION OR HTRW SITE ACTIVITIES)

Site: Bulk Fuel Facility Expan
Location: KHFB Bldg 19150
Project No.: 625990DM001
Client: USACE

Prepared by SSHO: John Kunyak
Project Manager: Devon Jencunovic
Date: 12/06/2014

Rating	Y	N	N/A	Comments/Immediate Corrective Action[1]
Accident Prevention Plan (APP) and Site Safety and Health Plan (SSHP) General Requirements				
Are there new onsite personnel? • Did they receive pre-entry briefing and are their names recorded in field logbook or daily log? • Was the USACE PM made aware of the new personnel. • Required training and medical surveillance documentation received (e.g., 40-hr, 8 hr, etc.)?	X X X X			
Did personnel sign in/out of site?	X			
Daily tailgate safety meetings conducted and documented?	X			
Were new activities performed today? Were hazards identified, discussed during the daily safety tailgate, and incorporated into revised APP/SSHP?	X			
New materials brought on site? MSDSs available?		X		
Exclusion (EZ), Contamination Reduction (CRZ), and Support Zones (SZ) delineated and enforced?			X	
General housekeeping measures in place to prevent hazards?			X	
Emergency Planning				
Were there any changes to emergency contact names, telephone numbers, or hospital? If so, were site personnel made aware and was information distributed/reposted.		X		
Adequate safety equipment inventory available?	X			
Fire extinguisher available (monthly inspection of extinguisher will suffice)	X			
Eyewash station(s) functioning and in place (weekly inspection of eye wash station will suffice)?	X			
First aid supplies available (weekly inspection of first aid kit will suffice)?	X			
Communication equipment readily available for emergencies?	X			
Any reported accidents/incidents at this site? If so, were accident reporting procedures followed?		X		
Air Monitoring				
Monitoring equipment specified in SSHP available and in working order? Air monitoring instrumentation for this site includes – check each if required/on site, note deficiencies in comments: • Combustible gas meter • Organic vapor analyzer • Contaminant specific analyzer for benzene (if total organic vapor concentrations exceed 0.5 ppm)			X	
Monitoring equipment calibrated and calibration records			X	

Y = Satisfactory or Yes; N = Unsatisfactory or No, N/A = Not applicable

Rating	Y	N	N/A	Comments/Immediate Corrective Action[1]
available?			X	
Environmental and personnel monitoring performed as specified in SSHP?			X	
PPE				
Proper dermal protection worn by EA and subcontracted employees when handling/ contacting hazardous chemicals or contaminated environmental media?	X			
Required PPE (hard hats, safety boots / shoes, eye protection with side shields, hearing protection) being worn by EA and subcontracted employees?	X			
PPE inspection completed by SSHO?	X			
Drill Rig Operations				
Daily rig inspection completed? Any equipment problems?			X	
Drill rigs/elevated equipment maintaining minimum 10-ft distance from energized (50 kV) overhead power lines?			X	
Investigation-derived Waste (IDW)				
Wastes properly staged, secured, and labeled at end of day?			Y	

Additional Comments:

Site Safety and Health Officer's Signature

Dec 06 2016

Date

[1]If a deficiency is noted that cannot be immediately corrected, the SSHO will monitor the progress in correcting the deficiency and will document following:

- Date the deficiency was identified
- Description of the deficiency
- Name of the person responsible for correcting the deficiency
- Projected date of correction
- Actual date of correction.

EA ENGINEERING, SCIENCE AND TECHNOLOGY, INC.
SAFETY MEETING REPORT

Date: 12/04/2014	**Time:** 7:00	**Duration of meeting:** 15 min	**Project #** 62599.01.0001
Location: KAFB Bldg 19150		**Task:** Install piping	

Type of meeting: X Daily ___ Weekly ___ Monthly ___ Other: _____

Items/Issues discussed:

1. Confined Space
2. Housekeeping
3. Muster Point
4. 100% tie off
5. Inspection of Tools / Equipment.

Attach minutes of safety meeting if taken.

Safety questions/issues raised:	Actions/Follow-up needed:
1. None	
2.	
3.	
4.	
5.	
6.	

Remarks:

Meeting conducted by: John Kuzak

HEALTH AND SAFETY ACTIVITY REPORT

Site: Bulk Fuel Facility Expansion Location: KAFB Bldg 19150

Weather Cond.: Cold, Breezy Onsite Hours: From 0700 To 1500

Changes in PPE Levels[1]	Work Operations	Reasons for Change
No changes		

Site Safety and Health Plan Violations	Corrective Action Specified	Corrective Action Taken[2] (yes/no)
No Violations		

Observations and Comments:

All observations Good

Completed by: Julian Kuyek Date: Dec 6 2016

Site Health and Safety Supervisor

[1]Only SSHO may change PPE levels, using only criteria specified in APP/SSHP.
[2]If a deficiency is noted that cannot be immediately corrected, the SSHO will monitor the progress in correcting the deficiency and will document following:

- Date the deficiency was identified
- Description of the deficiency
- Name of the person responsible for correcting the deficiency
- Projected date of correction
- Actual date of correction.

DAILY REPORT

(ATTACH ADDITIONAL SHEETS IF NECESSARY)

CONTRACT NAME:	Kirtland AFB Bulk Fuels Facility Expansion of Dissolved Plume GWTS Design	REPORT NO:	40
CONTRACT NUMBER:	W912DR-12-D-0006	REPORT DATE:	07 DEC 16
REVISION NUMBER:	-	REVISION DATE:	-
TASK ORDER NUMBER:	DM01	PROJECT NAME / LOCATION:	KAFB, ABQ, NM
PROJECT NUMBER:	62599DM01	PROJECT DESCRIPTION:	KAFB GWTS Expansion
PROJECT MANAGER:	Devon Jercinovic	FIELD QUALITY MANAGER:	Kevin McKeage
CONSTRUCTION MANAGER:		SITE SAFETY MANAGER:	John Kayate

AM WEATHER:	Cloudy, cool light breeze	PM WEATHER:	Partly cloudy, cool breezy	MAX TEMP (F):	45 °F		

SUMMARY OF WORK PERFORMED TODAY

Installed piping on newly installed GAC christmas tree and ARV piping.

HEALTH AND SAFETY REPORT

SAFETY ACTIONS TAKEN TODAY/SAFETY INSPECTIONS CONDUCTED (Include Observations, Safety Violations, Corrective Instructions Given, Corrective Actions Taken, and Results of Safety Inspections Conducted: NONE

TAILGATE TOPICS: Lift safety, tool safety, PPE

SAFE BEHAVIOR OBSERVATIONS/SELF-ASSESSMENTS:
Safe behavior Observed

OPERATIONS / PRODUCTION REPORT

WORK FORCE – CONTRACTOR AND SUBCONTRACTOR

Company	Cumulative Total of Work Hours From Previous Report	Total Hours Today	Total Work Hours From Start of Injection Event
Rupert	492	11	503
Techsas	189	3	192

EQUIPMENT ON HAND

Description of Equipment	Make/Model/Manufacturer	Equipment ID Number	Inspection Performed By
Manlift #1	GS-1930 Genie		Andres Porras

COMMENTS (acceptance status, inspection findings, etc.):

OK

WORK AND/OR TESTS ACCOMPLISHED OR IN PROGRESS

Performed Work / Test for Today:
Installed GAC Piping and ARV Piping.

Planned Work / Test for Tomorrow: Finish ARV Piping, install Tank sight glasses.

Planned Work / Test for Next Week: GAC delivery, piping, and wiring.

CHANGED CONDITIONS/DELAY/CONFLICTS ENCOUNTERED (List any conflicts with the project [i.e., scope of work and/or drawings], delays to the project attributable to site and weather conditions, etc.

VISITORS AND DISCUSSIONS: USACE w/others. Trent Simpler along with Regulators arrived to tour the facility. Lift operations were halted ~~during~~ during that time.

QUALITY CONTROL REPORT

MATERIALS DELIVERED TO JOB SITE

Quantity/Volume/ Weight	Description of Materials Received	Make/Model/Manufacturer	Material Lot Number	Inspection Performed By
1	8" to 6" Reducer			Kevin McKeage
1	8" to 6" Elbow Reducer			K McKeage
3	6" Open Flanges			K McKeage
Various	6" Gaskets and nuts and bolts			K McKeage

COMMENTS (acceptance status, inspection findings, etc.): OK

INSPECTIONS PERFORMED

Task/Activity Inspected	Inspection Performed	Findings
Piping	Visual Inspection	OK

TESTS PERFORMED

Task/Activity Tested	Test Performed	Test Results (Pass/Fail) - Criteria
NONE		

QUALITY ISSUES AND RESOLUTIONS: NONE

SUBMITTALS INSPECTION / REVIEW

Submittal No.	Submittal Description	Specification/Plan Reference	Submittal Approved?		Comment/Reason/Action
NA	Daily Report	-	Yes ☐	No ☐	Pending
NA	SBO	-	Yes ☐	No ☐	Pending
NA	PTSP	-	Yes ☐	No ☐	Pending

REGULATORY COMPLIANCE REPORT

PERMIT INSPECTIONS PERFORMED: NONE

WASTE ACCUMULATION/STOCKPILE AREA INSPECTION

Inspection Performed By:		Signature of Inspector:	
Accumulation / Stockpile Area Inspected:	NA		

No of Bins:		No of Tankers		No of Roll-Off Boxes:		No. of Tanks	

Inspection Results: NA

GENERAL COMMENTS

General Comments~ (rework, directives, etc.):

ATTACHMENTS

List of Attachments: (examples, as applicable: submittals, meeting minutes, safety meeting minutes, COCs, weight tickets, manifests, profiles, rework item list, RFIs, DCNs, photographs, etc.): Photo log and Safety Documentation

NOTE: Write all entries legibly in ink. Line out all unused portions or designate as "not applicable". Preparer signs first and last name on each completed daily report. This form may be filled out electronically and signed electronically.

PREPARER'S SIGNATURE

7 DEC 16

DATE

Location: Floor Near Easternmost New GAC Vessel
Description: 8” to 6” Reducers
Date: 7 December 2016 Direction: Down

Location: Floor Near Easternmost New GAC Vessel
Description: 6” Gaskets, Nuts, and Bolts
Date: 7 December 2016 Direction: Down

Location: Floor Near Westernmost New GAC Vessel
Description: 6" Open Flanges
Date: 7 December 2016 Direction: Down

Location: Newly Installed GAC Piping Tree
Description: Newly Installed 8" to 6" Elbow Reducer
Date: 7 December 2016 Direction: North

Location: Easternmost New GAC Vessel
Description: Reoriented Camlock Fittings
Date: 7 December 2016 Direction: Northeast

Location: Above Newly Installed Influent Tank
Description: Newly Installed ARV Piping
Date: 7 December 2016 Direction: Up

Location: Newly Installed GAC Piping Tree
Description: Newly Installed 8" to 6" Reducer
Date: 7 December 2016 Direction: North

EA Engineering, Science, and Technology, Inc.

DAILY SAFETY INSPECTION CHECKLIST (TO BE COMPLETED EACH DAY OF CONSTRUCTION OR HTRW SITE ACTIVITIES)

Site: Bulk Fuel Facility Expan.
Location: KAFB Bldg. 19150
Project No.: 625990DM01
Client: USACE

Prepared by SSHO: John Krayate
Project Manager: Devon Jercinovich
Date: 12/07/2016

Rating	Y	N	N/A	Comments/Immediate Corrective Action[1]
Accident Prevention Plan (APP) and Site Safety and Health Plan (SSHP) General Requirements				
Are there new onsite personnel? • Did they receive pre-entry briefing and are their names recorded in field logbook or daily log? • Was the USACE PM made aware of the new personnel. • Required training and medical surveillance documentation received (e.g., 40-hr, 8 hr, etc.)?		X	X X X	
Did personnel sign in/out of site?	X			
Daily tailgate safety meetings conducted and documented?	X			
Were new activities performed today? Were hazards identified, discussed during the daily safety tailgate, and incorporated into revised APP/SSHP?		X		
New materials brought on site? MSDSs available?		X		
Exclusion (EZ), Contamination Reduction (CRZ), and Support Zones (SZ) delineated and enforced?			X	
General housekeeping measures in place to prevent hazards?			X	
Emergency Planning				
Were there any changes to emergency contact names, telephone numbers, or hospital? If so, were site personnel made aware and was information distributed/reposted.		X		
Adequate safety equipment inventory available?	X			
Fire extinguisher available (monthly inspection of extinguisher will suffice)	X			
Eyewash station(s) functioning and in place (weekly inspection of eye wash station will suffice)?	X			
First aid supplies available (weekly inspection of first aid kit will suffice)?	X			
Communication equipment readily available for emergencies?	X			
Any reported accidents/incidents at this site? If so, were accident reporting procedures followed?		X		
Air Monitoring				
Monitoring equipment specified in SSHP available and in working order? Air monitoring instrumentation for this site includes – check each if required/on site, note deficiencies in comments: • Combustible gas meter • Organic vapor analyzer • Contaminant specific analyzer for benzene (if total organic vapor concentrations exceed 0.5 ppm)			X	
Monitoring equipment calibrated and calibration records			X	

Y = Satisfactory or Yes; N = Unsatisfactory or No, N/A = Not applicable

Rating	Y	N	N/A	Comments/Immediate Corrective Action[1]
available?			X	
Environmental and personnel monitoring performed as specified in SSHP?			X	
PPE				
Proper dermal protection worn by EA and subcontracted employees when handling/ contacting hazardous chemicals or contaminated environmental media?	X			
Required PPE (hard hats, safety boots / shoes, eye protection with side shields, hearing protection) being worn by EA and subcontracted employees?	X			
PPE inspection completed by SSHO?	X			
Drill Rig Operations				
Daily rig inspection completed? Any equipment problems?			X	
Drill rigs/elevated equipment maintaining minimum 10-ft distance from energized (50 kV) overhead power lines?			X	
Investigation-derived Waste (IDW)				
Wastes properly staged, secured, and labeled at end of day?			X	

Additional Comments:

John Kayatta
Site Safety and Health Officer's Signature

Dec 7, 2016
Date

[1]If a deficiency is noted that cannot be immediately corrected, the SSHO will monitor the progress in correcting the deficiency and will document following:

- Date the deficiency was identified
- Description of the deficiency
- Name of the person responsible for correcting the deficiency
- Projected date of correction
- Actual date of correction.

EA ENGINEERING, SCIENCE AND TECHNOLOGY, INC.
SAFETY MEETING REPORT

Date: 12/07/2016	**Time:** 07:00	**Duration of meeting:** 10 min	**Project #** 625990.DM01
Location: KAFB Bldg 19150		**Task:** INSTALL Fitting and High point Line	

Type of meeting: _X_ Daily ____ Weekly ____ Monthly ____ Other:_____

Items/Issues discussed:

1. Scope of work
2. House Keeping
3. 100% PPE
4. 100% Fall protection
5.

Attach minutes of safety meeting if taken.

Safety questions/issues raised:	Actions/Follow-up needed:
1. None	
2.	
3.	
4.	
5.	
6.	

Remarks:

Meeting conducted by:
John Kay

HEALTH AND SAFETY ACTIVITY REPORT

Site: Bulk Fuel Facility Expansion Location: KAFB Bldg 19150

Weather Cond.: Cold, Windy Onsite Hours: From 0700 To 3:00

Changes in PPE Levels[1]	Work Operations	Reasons for Change
No Changes		

Site Safety and Health Plan Violations	Corrective Action Specified	Corrective Action Taken[2] (yes/no)
No Violations		

Observations and Comments:
All Observation Good

Completed by: John Kuzela Date: Dec 7 2016
Site Health and Safety Supervisor

[1]Only SSHO may change PPE levels, using only criteria specified in APP/SSHP.
[2]If a deficiency is noted that cannot be immediately corrected, the SSHO will monitor the progress in correcting the deficiency and will document following:

- Date the deficiency was identified
- Description of the deficiency
- Name of the person responsible for correcting the deficiency
- Projected date of correction
- Actual date of correction.

DAILY REPORT

(ATTACH ADDITIONAL SHEETS IF NECESSARY)

CONTRACT NAME:	Kirtland AFB Bulk Fuels Facility Expansion of Dissolved Plume GWTS Design	REPORT NO:	41
CONTRACT NUMBER:	W912DR-12-D-0006	REPORT DATE:	08DEC16
REVISION NUMBER:	-	REVISION DATE:	-
TASK ORDER NUMBER:	DM01	PROJECT NAME / LOCATION:	KAFB, ABQ, NM
PROJECT NUMBER:	62599DM01	PROJECT DESCRIPTION:	KAFB GWTS Expansion
PROJECT MANAGER:	Devon Jercinovic	FIELD QUALITY MANAGER:	Kody Garcia
CONSTRUCTION MANAGER:	Alex Spiller	SITE SAFETY MANAGER:	John Kayate

AM WEATHER:	Cloudy, cool	PM WEATHER:	partially Cloudy, cool	MAX TEMP (F):	39		

SUMMARY OF WORK PERFORMED TODAY

Installed ARV piping, installed sight flanges, Frac tank delivered to site

HEALTH AND SAFETY REPORT

SAFETY ACTIONS TAKEN TODAY/SAFETY INSPECTIONS CONDUCTED (Include Observations, Safety Violations, Corrective Instructions Given, Corrective Actions Taken, and Results of Safety Inspections Conducted:

None

TAILGATE TOPICS:

lift safety, overhead hazards, slips/trips/falls, PPE, eyewash stations

SAFE BEHAVIOR OBSERVATIONS/SELF-ASSESSMENTS:

Safe behavior observed

OPERATIONS / PRODUCTION REPORT

WORK FORCE – CONTRACTOR AND SUBCONTRACTOR

Company	Cumulative Total of Work Hours From Previous Report	Total Hours Today	Total Work Hours From Start of Injection Event
Rupert	503	9	512
Techsas	192	4	196
Rain for Rent	0	1	1

EQUIPMENT ON HAND

Description of Equipment	Make/Model/Manufacturer	Equipment ID Number	Inspection Performed By
Manlift	GS-1930 Genie		Andres Porras
21,000 gallon Frac Tank		253224	Mike Rupert

COMMENTS (acceptance status, inspection findings, etc.):

OK

WORK AND/OR TESTS ACCOMPLISHED OR IN PROGRESS

Performed Work / Test for Today:

Installed ARV piping, installed sight flanges, Frac tank delivered

Planned Work / Test for Tomorrow:

various pipe component installations

Planned Work / Test for Next Week:

Carbon delivery, piping and wiring

CHANGED CONDITIONS/DELAY/CONFLICTS ENCOUNTERED (List any conflicts with the project [i.e., scope of work and/or drawings], delays to the project attributable to site and weather conditions, etc.

VISITORS AND DISCUSSIONS: Trent Simpler Stopped by

QUALITY CONTROL REPORT

MATERIALS DELIVERED TO JOB SITE

Quantity/Volume/ Weight	Description of Materials Received	Make/Model/Manufacturer	Material Lot Number	Inspection Performed By
2	Sight glass with flange (small)	207186		Kody Garcia
2	Sight glass with flange (large)	4261012200001		Kody Garcia
1	Welded Tee			Kody Garcia
1	Butterfly valve	101696-A		Kody Garcia

COMMENTS (acceptance status, inspection findings, etc.): none

INSPECTIONS PERFORMED

Task/Activity Inspected	Inspection Performed	Findings
piping	visual inspection	OK
flanges/sight glass	visual inspection	OK

TESTS PERFORMED

Task/Activity Tested	Test Performed	Test Results (Pass/Fail) - Criteria
NA		

QUALITY ISSUES AND RESOLUTIONS: none

SUBMITTALS INSPECTION / REVIEW

Submittal No.	Submittal Description	Specification/Plan Reference	Submittal Approved?		Comment/Reason/Action
NA	Daily Report	–	Yes ☐	No ☐	Pending
NA	SBO	–	Yes ☐	No ☐	Pending
NA	PTSP	–	Yes ☐	No ☐	Pending

REGULATORY COMPLIANCE REPORT

PERMIT INSPECTIONS PERFORMED: none

WASTE ACCUMULATION/STOCKPILE AREA INSPECTION

Inspection Performed By:		Signature of Inspector:			
Accumulation / Stockpile Area Inspected:	NA				
No of Bins:		No of Tankers		No of Roll-Off Boxes:		No. of Tanks	

Inspection Results: NA

GENERAL COMMENTS

General Comments~ (rework, directives, etc.):

none

ATTACHMENTS

List of Attachments: (examples, as applicable: submittals, meeting minutes, safety meeting minutes, COCs, weight tickets, manifests, profiles, rework item list, RFIs, DCNs, photographs, etc.): Photo log and safety documentation

NOTE: Write all entries legibly in ink. Line out all unused portions or designate as "not applicable". Preparer signs first and last name on each completed daily report. This form may be filled out electronically and signed electronically.

Kody A. Garcia — PREPARER'S SIGNATURE

08 DEC 16 — DATE

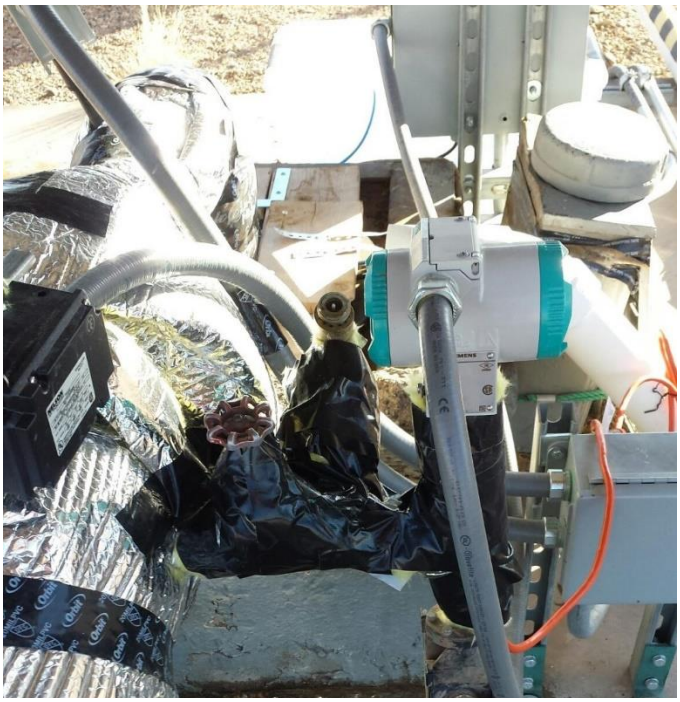

Location: Injection Well KAFB-7
Description: Newly Installed Heat Tape and Insulation
Date: 08 December 2016 Direction: Down

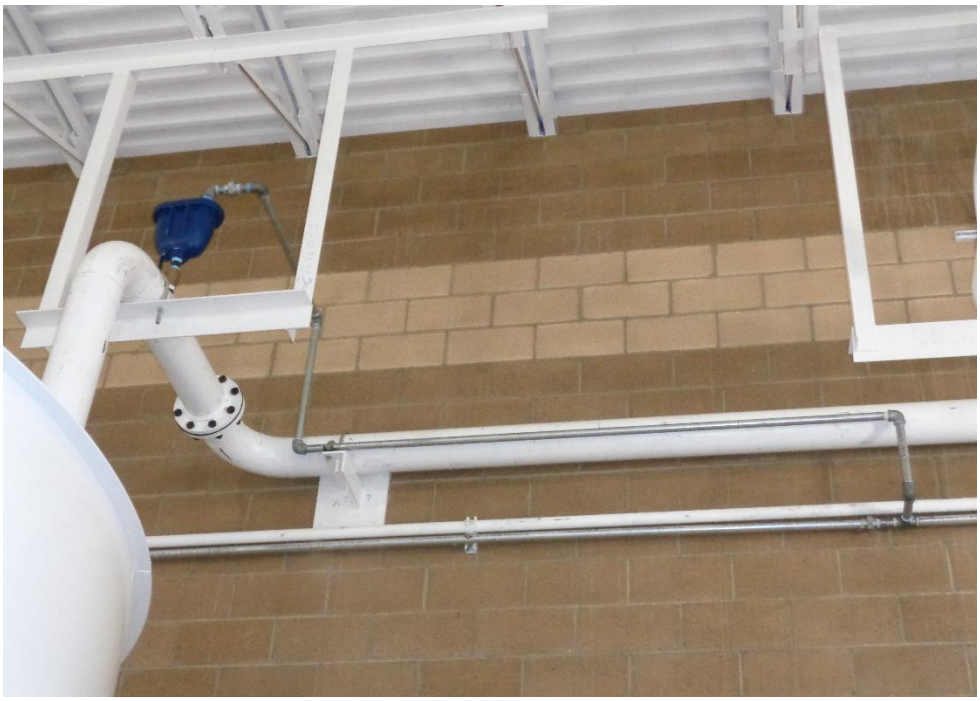

Location: Above New Influent Feed Tank
Description: Newly Installed ARV Piping
Date: 08 December 2016 Direction: North

Location: Floor Beneath New GAC Vessel (2st from East Wall)
Description: Newly Delivered Tee and Butterfly Valve
Date: 08 December 2016 Direction: Down

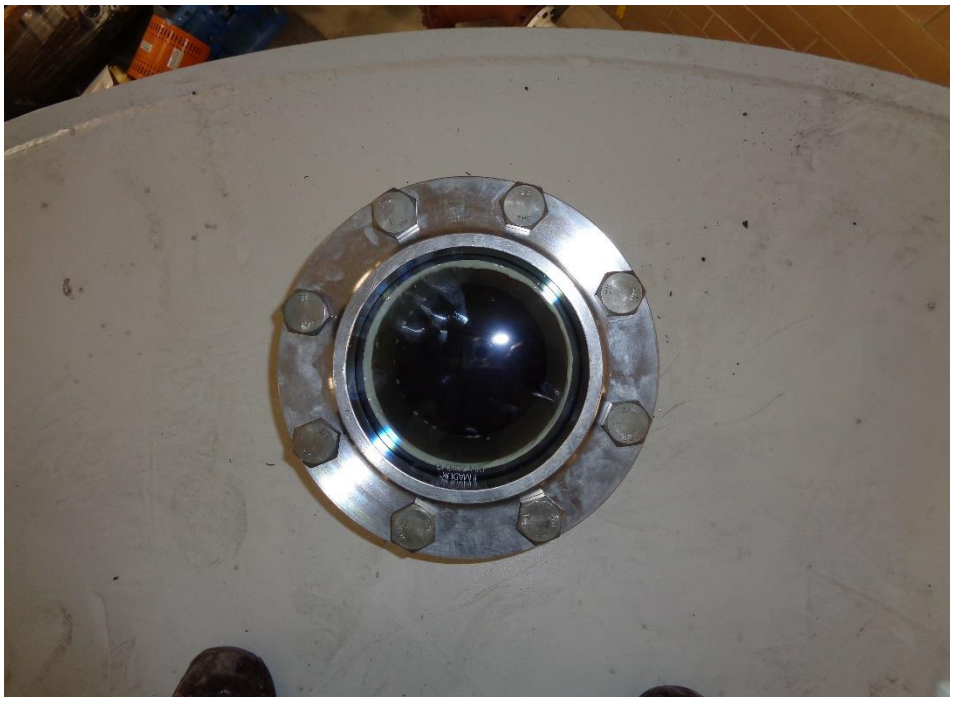

Location: Top of New Effluent Feed Tank
Description: Newly Installed Sight Flange
Date: 08 December 2016 Direction: Down

Location: Top of New Influent Feed Tank
Description: Newly Installed Sight Flange
Date: 08 December 2016 Direction: Down

Location: New Effluent Feed Tank
Description: Newly Installed Sight Flange
Date: 08 December 2016 Direction: Northeast

Location: New Influent Feed Tank
Description: Newly Installed Sight Flange
Date: 08 December 2016 Direction: Northeast

Location: Outside the GWTS (Lot South of Building)
Description: Newly Delivered 21,000 Frac Tank
Date: 08 December 2016 Direction: Southeast

EA Engineering, Science, and Technology, Inc.

DAILY SAFETY INSPECTION CHECKLIST (TO BE COMPLETED EACH DAY OF CONSTRUCTION OR HTRW SITE ACTIVITIES)

Site: Bulk Fuel Facility Expan. Prepared by SSHO: John Kayate
Location: KAFB Bldg. 19150
Project No.: 62599ODM001 Project Manager: Devon Jerabkovic
Client: USACE Date: 12/08/2014

Rating	Y	N	N/A	Comments/Immediate Corrective Action[1]
Accident Prevention Plan (APP) and Site Safety and Health Plan (SSHP) General Requirements				
Are there new onsite personnel? • Did they receive pre-entry briefing and are their names recorded in field logbook or daily log? • Was the USACE PM made aware of the new personnel. • Required training and medical surveillance documentation received (e.g., 40-hr, 8 hr, etc.)?		X	X X X	
Did personnel sign in/out of site?	X			
Daily tailgate safety meetings conducted and documented?	X			
Were new activities performed today? Were hazards identified, discussed during the daily safety tailgate, and incorporated into revised APP/SSHP?		X		
New materials brought on site? MSDSs available?		X		
Exclusion (EZ), Contamination Reduction (CRZ), and Support Zones (SZ) delineated and enforced?			X	
General housekeeping measures in place to prevent hazards?			X	
Emergency Planning				
Were there any changes to emergency contact names, telephone numbers, or hospital? If so, were site personnel made aware and was information distributed/reposted.		X		
Adequate safety equipment inventory available?	X			
Fire extinguisher available (monthly inspection of extinguisher will suffice)	X			
Eyewash station(s) functioning and in place (weekly inspection of eye wash station will suffice)?	X			
First aid supplies available (weekly inspection of first aid kit will suffice)?	X			
Communication equipment readily available for emergencies?	X			
Any reported accidents/incidents at this site? If so, were accident reporting procedures followed?		X		
Air Monitoring				
Monitoring equipment specified in SSHP available and in working order? Air monitoring instrumentation for this site includes – check each if required/on site, note deficiencies in comments: • Combustible gas meter • Organic vapor analyzer • Contaminant specific analyzer for benzene (if total organic vapor concentrations exceed 0.5 ppm)			X	
Monitoring equipment calibrated and calibration records			X	

Y = Satisfactory or Yes; N = Unsatisfactory or No, N/A = Not applicable

Rating	Y	N	N/A	Comments/Immediate Corrective Action[1]
available?			X	
Environmental and personnel monitoring performed as specified in SSHP?			X	
PPE				
Proper dermal protection worn by EA and subcontracted employees when handling/ contacting hazardous chemicals or contaminated environmental media?	X			
Required PPE (hard hats, safety boots / shoes, eye protection with side shields, hearing protection) being worn by EA and subcontracted employees?	X			
PPE inspection completed by SSHO?				
Drill Rig Operations				
Daily rig inspection completed? Any equipment problems?			X	
Drill rigs/elevated equipment maintaining minimum 10-ft distance from energized (50 kV) overhead power lines?			X	
Investigation-derived Waste (IDW)				
Wastes properly staged, secured, and labeled at end of day?			X	
Additional Comments:				

John Kovach
Site Safety and Health Officer's Signature

Dec 8 2016
Date

[1]If a deficiency is noted that cannot be immediately corrected, the SSHO will monitor the progress in correcting the deficiency and will document following:

- Date the deficiency was identified
- Description of the deficiency
- Name of the person responsible for correcting the deficiency
- Projected date of correction
- Actual date of correction.

Y = Satisfactory or Yes; N = Unsatisfactory or No, N/A = Not applicable

EA ENGINEERING, SCIENCE AND TECHNOLOGY, INC.
SAFETY MEETING REPORT

Date: Dec 8 2016	**Time:** 0700	**Duration of meeting:** 10 MIN	**Project #** 625
Location: KAFB Bldg 19150		**Task:** Install piping	

Type of meeting: X **Daily** ___ **Weekly** ___ **Monthly** ___ **Other:** _____

Items/Issues discussed:

1. Scope of Work
2. PINCH POINTS
3. 100% PPE
4. 100% TIE OFF
5. HOUSEKEEPING

Attach minutes of safety meeting if taken.

Safety questions/issues raised:	Actions/Follow-up needed:
1. NONE	
2.	
3.	
4.	
5.	
6.	

Remarks:

Meeting conducted by: John Kayate Indeed Safety

HEALTH AND SAFETY ACTIVITY REPORT

Site: Bulk Fuel Facility Expansion Location: KHFB Bldg 19150

Weather Cond.: Cold Onsite Hours: From 0700 To 1500

Changes in PPE Levels[1]	Work Operations	Reasons for Change
No CHANGES		

Site Safety and Health Plan Violations	Corrective Action Specified	Corrective Action Taken [2](yes/no)
No Violations		

Observations and Comments:
All OBSERVATION Good

Completed by: John Kuzuto Date: Dec 8 2016
Site Health and Safety Supervisor

[1]Only SSHO may change PPE levels, using only criteria specified in APP/SSHP.
[2]If a deficiency is noted that cannot be immediately corrected, the SSHO will monitor the progress in correcting the deficiency and will document following:

- Date the deficiency was identified
- Description of the deficiency
- Name of the person responsible for correcting the deficiency
- Projected date of correction
- Actual date of correction.

DAILY REPORT

(ATTACH ADDITIONAL SHEETS IF NECESSARY)

CONTRACT NAME:	Kirtland AFB Bulk Fuels Facility Expansion of Dissolved Plume GWTS Design	REPORT NO:	42
CONTRACT NUMBER:	W912DR-12-D-0006	REPORT DATE:	12DEC16
REVISION NUMBER:	-	REVISION DATE:	-
TASK ORDER NUMBER:	DM01	PROJECT NAME / LOCATION:	KAFB, ABQ, NM
PROJECT NUMBER:	62599DM01	PROJECT DESCRIPTION:	KAFB GWTS Expansion
PROJECT MANAGER:	Devon Jercinovic	FIELD QUALITY MANAGER:	Alex Spilke
CONSTRUCTION MANAGER:	Alex Spilke	SITE SAFETY MANAGER:	John Kayate

AM WEATHER:	cold, partly cloudy breezy	PM WEATHER:		MAX TEMP (F):		

SUMMARY OF WORK PERFORMED TODAY

install magmeter, pull wire, install pressure sensor, install tap

HEALTH AND SAFETY REPORT

SAFETY ACTIONS TAKEN TODAY/SAFETY INSPECTIONS CONDUCTED (Include Observations, Safety Violations, Corrective Instructions Given, Corrective Actions Taken, and Results of Safety Inspections Conducted: ~~List safety, welding safety, 911, muster area~~.

Safe Behavior Observed, no violations

TAILGATE TOPICS: Lift safety, welding safety, 911/ muster area

SAFE BEHAVIOR OBSERVATIONS/SELF-ASSESSMENTS: OK, Safe behavior observed

OPERATIONS / PRODUCTION REPORT

WORK FORCE – CONTRACTOR AND SUBCONTRACTOR

Company	Cumulative Total of Work Hours From Previous Report	Total Hours Today	Total Work Hours From Start of Injection Event
Rupert	512	10	522
Techsas	196	5	201
Wilson Electric	208	18	226

EQUIPMENT ON HAND

Description of Equipment	Make/Model/Manufacturer	Equipment ID Number	Inspection Performed By
Manlift	GS-1930 Genie	10145036	Roberto Gurrola
Manlift	GS-1930 Genie		Elias Gallegos
21,000 gal Frac tank		253224	
DC welder	Miller Pipe Pro 304	LH011352G	John Kayate

COMMENTS (acceptance status, inspection findings, etc.):

OK

WORK AND/OR TESTS ACCOMPLISHED OR IN PROGRESS

Performed Work / Test for Today: install magmeter on effluent pump skid (existing), install pressure sensor on new GAC tree, pull wire, install tap for pressure sensor on effluent tree

Planned Work / Test for Tomorrow: Carbon fill on new GACs, install wiring

Planned Work / Test for Next Week:

None

CHANGED CONDITIONS/DELAY/CONFLICTS ENCOUNTERED (List any conflicts with the project [i.e., scope of work and/or drawings], delays to the project attributable to site and weather conditions, etc. Grounding conduit [redacted] under new GAC is plugged w/ cement

VISITORS AND DISCUSSIONS: None

QUALITY CONTROL REPORT

MATERIALS DELIVERED TO JOB SITE

Quantity/Volume/ Weight	Description of Materials Received	Make/Model/Manufacturer	Material Lot Number	Inspection Performed By
2	6" Pipe Flowmeters (Siemens)	Sitrans FM Mag 5100W	8284030496	A Spiller
3	3" Pipe Flowmeters (Siemens)	Sitrans FM Mag 5100W	8209030496	A Spiller
1	Pressure Switch	Mercoid AIF Compact pressure switch		A Spiller

COMMENTS (acceptance status, inspection findings, etc.):

INSPECTIONS PERFORMED

Task/Activity Inspected	Inspection Performed	Findings
wiring	Visual inspection	OK
Plumbing	Visual inspection	OK

TESTS PERFORMED

Task/Activity Tested	Test Performed	Test Results (Pass/Fail) - Criteria
None		

QUALITY ISSUES AND RESOLUTIONS: None

SUBMITTALS INSPECTION / REVIEW

Submittal No.	Submittal Description	Specification/Plan Reference	Submittal Approved?		Comment/Reason/Action
NA	Daily Report	–	Yes ☐	No ☐	Pending
NA	SBO	–	Yes ☐	No ☐	Pending
NA	PTSP	–	Yes ☐	No ☐	Pending

REGULATORY COMPLIANCE REPORT

PERMIT INSPECTIONS PERFORMED: None

WASTE ACCUMULATION/STOCKPILE AREA INSPECTION

Inspection Performed By:		Signature of Inspector:			
Accumulation / Stockpile Area Inspected:	NA				
No of Bins:		No of Tankers		No of Roll-Off Boxes:		No. of Tanks	

Inspection Results: NA

GENERAL COMMENTS

General Comments~ (rework, directives, etc.):

OK

ATTACHMENTS

List of Attachments: (examples, as applicable: submittals, meeting minutes, safety meeting minutes, COCs, weight tickets, manifests, profiles, rework item list, RFIs, DCNs, photographs, etc.):

Photo log and safety document

NOTE: Write all entries legibly in ink. Line out all unused portions or designate as "not applicable". Preparer signs first and last name on each completed daily report. This form may be filled out electronically and signed electronically.

Alec Spill — PREPARER'S SIGNATURE

12DEC16 — DATE

Location: Existing Effluent Pump Skid
Description: Newly Installed Flowmeter
Date: 12 December 2016 Direction: Northeast

Location: Effluent Discharge Christmas Tree
Description: Newly Installed Tap for Pressure Gauge
Date: 12 December 2016 Direction: South

Location: Control Room
Description: Newly Delivered 3" Flowmeter
Date: 12 December 2016 Direction: Down

Location: GWTS Floor
Description: Newly Delivered 6" Flowmeter
Date: 12 December 2016 Direction: Down

Location: Newly Installed GAC Christmas Tree
Description: Newly Installed Pressure Switch
Date: 12 December 2016 Direction: South

Location: Floor Below Easternmost GAC Vessel
Description: Existing Grounding Conduit Blocked with Cement
Date: 12 December 2016 Direction: Down

EA Engineering, Science, and Technology, Inc.

DAILY SAFETY INSPECTION CHECKLIST (TO BE COMPLETED EACH DAY OF CONSTRUCTION OR HTRW SITE ACTIVITIES)

Site: Bulk Fuel Facility Expan
Location: VAFB Bldg 19150
Project No.: 62599 Dm01
Client: USACE

Prepared by SSHO: John Kaynte
Project Manager: Devon Jeremovic
Date: 12/12/2016

Rating	Y	N	N/A	Comments/Immediate Corrective Action[1]
Accident Prevention Plan (APP) and Site Safety and Health Plan (SSHP) General Requirements				
Are there new onsite personnel? • Did they receive pre-entry briefing and are their names recorded in field logbook or daily log? • Was the USACE PM made aware of the new personnel. • Required training and medical surveillance documentation received (e.g., 40-hr, 8 hr, etc.)?		X	X X X	
Did personnel sign in/out of site?	X			
Daily tailgate safety meetings conducted and documented?	X			
Were new activities performed today? Were hazards identified, discussed during the daily safety tailgate, and incorporated into revised APP/SSHP?		X		
New materials brought on site? MSDSs available?		X		
Exclusion (EZ), Contamination Reduction (CRZ), and Support Zones (SZ) delineated and enforced?			X	
General housekeeping measures in place to prevent hazards?			X	
Emergency Planning				
Were there any changes to emergency contact names, telephone numbers, or hospital? If so, were site personnel made aware and was information distributed/reposted.		X		
Adequate safety equipment inventory available?	X			
Fire extinguisher available (monthly inspection of extinguisher will suffice)	X			
Eyewash station(s) functioning and in place (weekly inspection of eye wash station will suffice)?	X			
First aid supplies available (weekly inspection of first aid kit will suffice)?	X			
Communication equipment readily available for emergencies?	X			
Any reported accidents/incidents at this site? If so, were accident reporting procedures followed?		X		
Air Monitoring				
Monitoring equipment specified in SSHP available and in working order? Air monitoring instrumentation for this site includes – check each if required/on site, note deficiencies in comments: • Combustible gas meter • Organic vapor analyzer • Contaminant specific analyzer for benzene (if total organic vapor concentrations exceed 0.5 ppm)			X	
Monitoring equipment calibrated and calibration records			X	

Y = Satisfactory or Yes; N = Unsatisfactory or No, N/A = Not applicable

Rating	Y	N	N/A	Comments/Immediate Corrective Action[1]
available?			X	
Environmental and personnel monitoring performed as specified in SSHP?			X	
PPE				
Proper dermal protection worn by EA and subcontracted employees when handling/ contacting hazardous chemicals or contaminated environmental media?	X			
Required PPE (hard hats, safety boots / shoes, eye protection with side shields, hearing protection) being worn by EA and subcontracted employees?	X			
PPE inspection completed by SSHO?	X			
Drill Rig Operations				
Daily rig inspection completed? Any equipment problems?			X	
Drill rigs/elevated equipment maintaining minimum 10-ft distance from energized (50 kV) overhead power lines?			X	
Investigation-derived Waste (IDW)				
Wastes properly staged, secured, and labeled at end of day?			X	

Additional Comments:

John Krayato
Site Safety and Health Officer's Signature

Dec 12, 2016
Date

[1]If a deficiency is noted that cannot be immediately corrected, the SSHO will monitor the progress in correcting the deficiency and will document following:

- Date the deficiency was identified
- Description of the deficiency
- Name of the person responsible for correcting the deficiency
- Projected date of correction
- Actual date of correction.

Y = Satisfactory or Yes; N = Unsatisfactory or No, N/A = Not applicable

EA ENGINEERING, SCIENCE AND TECHNOLOGY, INC.
SAFETY MEETING REPORT

Date: Dec 12, 2012	Time: 0700	Duration of meeting: 10 min	Project # 62599DM01
Location: ICAFB Bldg 19150		Task: Pull wire, cut in Mag. Flow meter	

Type of meeting: X Daily ___ Weekly ___ Monthly ___ Other: _____

Items/Issues discussed:

1. HOT WORK - FIRE Blankets, Welding screens
2. Scope of work
3. Lock out Tag out
4. 100% PPE.
5. House Keeping

Attach minutes of safety meeting if taken.

Safety questions/issues raised:	Actions/Follow-up needed:
1. None	
2.	
3.	
4.	
5.	
6.	

Remarks:

Meeting conducted by:

John Kuzmik Indeed safety

HEALTH AND SAFETY ACTIVITY REPORT

Site: Bulk Fuel Facility Expansion Location: KAFB Bldg 19150

Weather Cond.: Mild Onsite Hours: From 0700 To 1500

Changes in PPE Levels[1]	Work Operations	Reasons for Change
No changes		

Site Safety and Health Plan Violations	Corrective Action Specified	Corrective Action Taken [2](yes/no)
No violations		

Observations and Comments:

All observations Good

Completed by: John Kingston Date: Dec 12, 2016
Site Health and Safety Supervisor

[1]Only SSHO may change PPE levels, using only criteria specified in APP/SSHP.
[2]If a deficiency is noted that cannot be immediately corrected, the SSHO will monitor the progress in correcting the deficiency and will document following:

- Date the deficiency was identified
- Description of the deficiency
- Name of the person responsible for correcting the deficiency
- Projected date of correction
- Actual date of correction.

DAILY REPORT

(ATTACH ADDITIONAL SHEETS IF NECESSARY)

CONTRACT NAME:	Kirtland AFB Bulk Fuels Facility Expansion of Dissolved Plume GWTS Design	REPORT NO:	43
CONTRACT NUMBER:	W912DR-12-D-0006	REPORT DATE:	13DEC16
REVISION NUMBER:	-	REVISION DATE:	-
TASK ORDER NUMBER:	DM01	PROJECT NAME / LOCATION:	KAFB, ABQ, NM
PROJECT NUMBER:	62599DM01	PROJECT DESCRIPTION:	KAFB GWTS Expansion
PROJECT MANAGER:	Devon Jercinovic	FIELD QUALITY MANAGER:	Kevin McKeage
CONSTRUCTION MANAGER:		SITE SAFETY MANAGER:	John Kayate

AM WEATHER:	Cold, partly Cloudy	PM WEATHER:	Cool, partly Cloudy.	MAX TEMP (F):	57°F		

SUMMARY OF WORK PERFORMED TODAY

Pull wire, GAC Addition to Newly installed Carbon Vessels, installed grounding wires, flow meter transmitters and pressure transmitters.

HEALTH AND SAFETY REPORT

SAFETY ACTIONS TAKEN TODAY/SAFETY INSPECTIONS CONDUCTED (Include Observations, Safety Violations, Corrective Instructions Given, Corrective Actions Taken, and Results of Safety Inspections Conducted:

Safe Behavior Observed, no violations

TAILGATE TOPICS:

Lift Safety, Slips, Trips, Falls, GAC safety, etc.

SAFE BEHAVIOR OBSERVATIONS/SELF-ASSESSMENTS:

OK, Safe Behavior Observed.

OPERATIONS / PRODUCTION REPORT

WORK FORCE – CONTRACTOR AND SUBCONTRACTOR

Company	Cumulative Total of Work Hours From Previous Report	Total Hours Today	Total Work Hours From Start of Injection Event
Rupert	522	2	524
Techsas	201	8	209
Wilson	226	14	240
Calgon	2	11	13

EQUIPMENT ON HAND

Description of Equipment	Make/Model/Manufacturer	Equipment ID Number	Inspection Performed By
Manlift	GS-1930 Genie	10145036	Roberto Guzman
Manlift	GS-1930 Genie		Elias Gallegos
21,000 gal FracTank		253224	

COMMENTS (acceptance status, inspection findings, etc.):

OK

WORK AND/OR TESTS ACCOMPLISHED OR IN PROGRESS

Performed Work / Test for Today:

Pull wire, Added GAC, installed grounding wires, flowmeter transmitters and pressure transmitters.

Planned Work / Test for Tomorrow:

Pull wire, install conduit

Planned Work / Test for Next Week:

None

CHANGED CONDITIONS/DELAY/CONFLICTS ENCOUNTERED (List any conflicts with the project [i.e., scope of work and/or drawings], delays to the project attributable to site and weather conditions, etc. Discovered blockage in the tube for the East most GAC Groundwater line.

VISITORS AND DISCUSSIONS: Amy Sanchez and Mark Phoenix onsite to observe GAC Addition

QUALITY CONTROL REPORT

MATERIALS DELIVERED TO JOB SITE

Quantity/Volume/ Weight	Description of Materials Received	Make/Model/Manufacturer	Material Lot Number	Inspection Performed By
8	Level Regulator Brs	Nivayppa ENM-10	5828830-13M	K. McKay

COMMENTS (acceptance status, inspection findings, etc.): OK

INSPECTIONS PERFORMED

Task/Activity Inspected	Inspection Performed	Findings
Wells + Transmitters	Visual Inspection	OK
GAC Addition	Visual Inspection	OK

TESTS PERFORMED

Task/Activity Tested	Test Performed	Test Results (Pass/Fail) - Criteria
None		

QUALITY ISSUES AND RESOLUTIONS: None

SUBMITTALS INSPECTION / REVIEW

Submittal No.	Submittal Description	Specification/Plan Reference	Submittal Approved?		Comment/Reason/Action
NA	Daily Report	_	Yes ☐	No ☐	Pending
NA	SBO	_	Yes ☐	No ☐	Pending
NA	PTSP	_	Yes ☐	No ☐	Pending

REGULATORY COMPLIANCE REPORT

PERMIT INSPECTIONS PERFORMED: None

WASTE ACCUMULATION/STOCKPILE AREA INSPECTION

Inspection Performed By:		Signature of Inspector:	
Accumulation / Stockpile Area Inspected:	NA		

No of Bins:		No of Tankers		No of Roll-Off Boxes:		No. of Tanks	

Inspection Results: NA

GENERAL COMMENTS

General Comments~ (rework, directives, etc.): OK

ATTACHMENTS

List of Attachments: (examples, as applicable: submittals, meeting minutes, safety meeting minutes, COCs, weight tickets, manifests, profiles, rework item list, RFIs, DCNs, photographs, etc.): Photo log + Safety Documentation

NOTE: Write all entries legibly in ink. Line out all unused portions or designate as "not applicable". Preparer signs first and last name on each completed daily report. This form may be filled out electronically and signed electronically.

PREPARER'S SIGNATURE

13 DEC 16

DATE

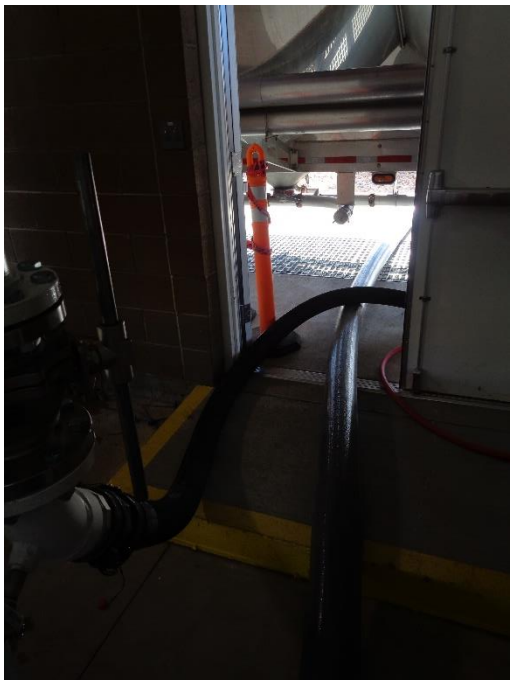

Location: Newly Installed GAC Vessels
Description: Lines Running from the GAC Truck to the GAC Vessels
Date: 13 December 2016 Direction: South

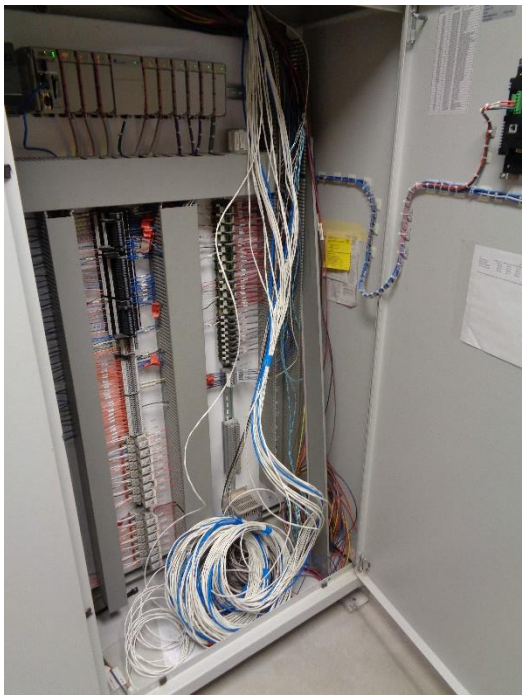

Location: Control Room HMI Panel
Description: Pulled COM Wires
Date: 13 December 2016 Direction: South

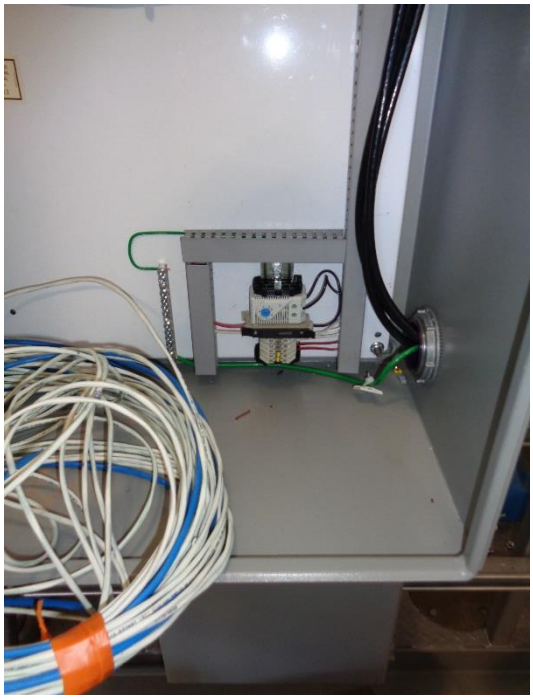

Location: Newly Installed Influent Skid Panel
Description: Pulled Wires and Installed Electronics
Date: 13 December 2016 Direction: West

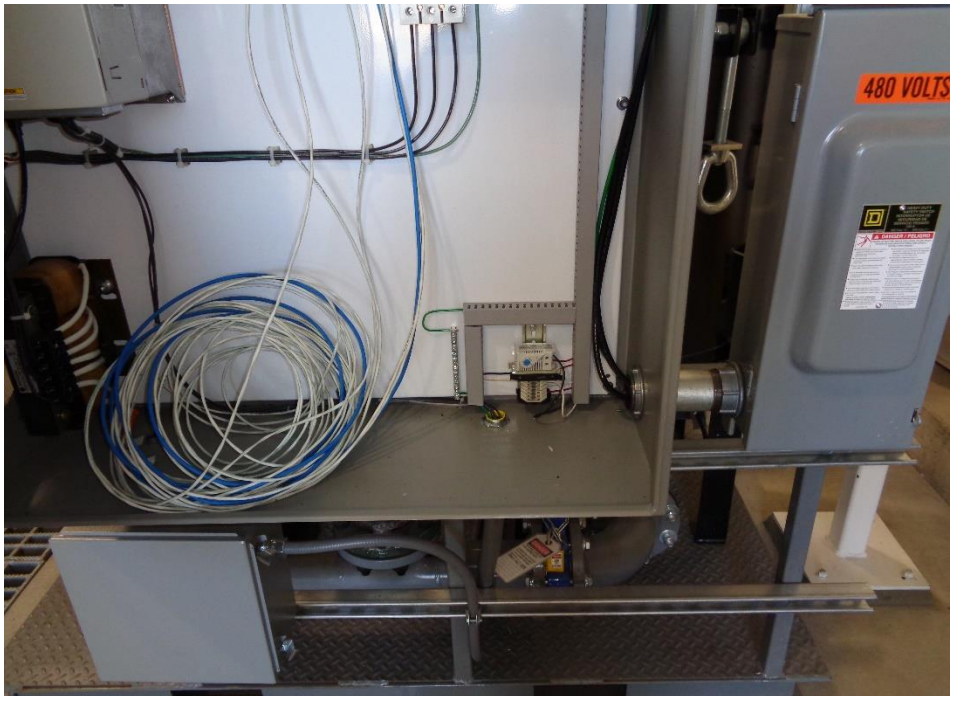

Location: Newly Installed Effluent Skid Panel
Description: Pulled Wires and Installed Electronics
Date: 13 December 2016 Direction: West

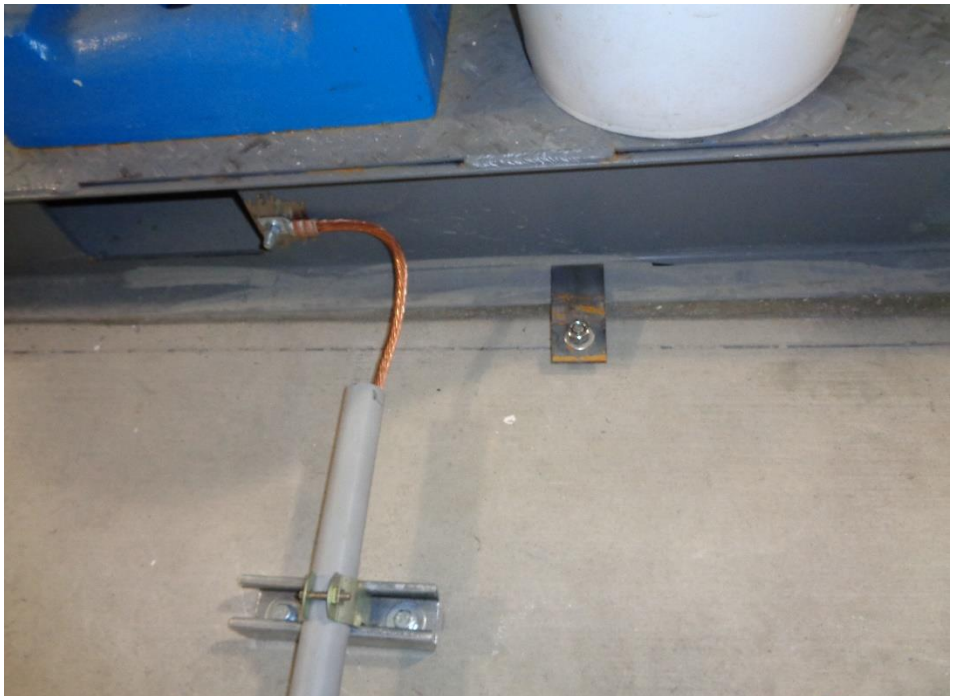

Location: Newly Installed Effluent Skid
Description: Newly Installed Grounding Wire
Date: 13 December 2016 Direction: Down

Location: Newly Installed Effluent Tank
Description: Newly Installed Grounding Wire
Date: 13 December 2016 Direction: Down

Location: Newly Installed Influent Tank
Description: Newly Installed Grounding Wire
Date: 13 December 2016 Direction: Down

Location: Existing Influent Skid
Description: Newly Installed Flow Meter Transmitter
Date: 13 December 2016 Direction: East

Location: Newly Installed Effluent Skid
Description: Newly Installed Flow Meter Transmitter
Date: 13 December 2016 Direction: West

Location: Existing Effluent Skid
Description: Newly Installed Flow Meter Transmitter
Date: 13 December 2016 Direction: West

Location: Control Room
Description: Delivered Level Regulator
Date: 13 December 2016 Direction: Down

Location: Newly Installed Influent Skid
Description: Newly Installed Flow Meter and Pressure Transmitters
Date: 13 December 2016 Direction: West

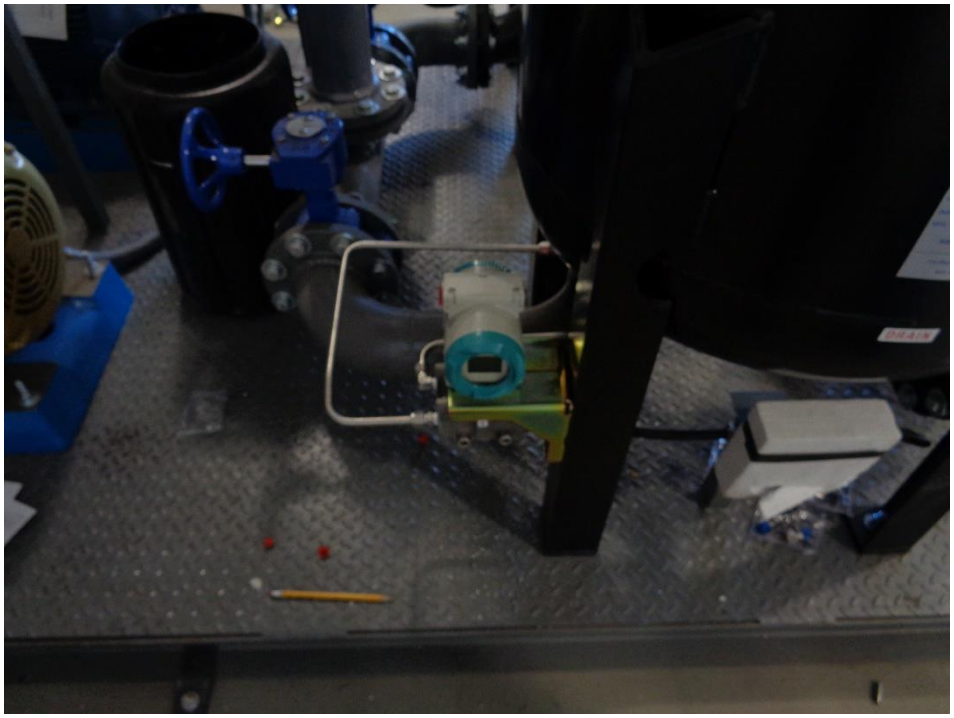

Location: Newly Installed Influent Skid
Description: Newly Installed Pressure Transmitter
Date: 13 December 2016 Direction: East

EA Engineering, Science, and Technology, Inc.

DAILY SAFETY INSPECTION CHECKLIST (TO BE COMPLETED EACH DAY OF CONSTRUCTION OR HTRW SITE ACTIVITIES)

Site: Bulk Fuel Facility Expan. Prepared by SSHO: John Kayate
Location: KAFB Bldg. 19150
Project No.: 62599DM01 Project Manager: Devon Jencinovic
Client: USACE Date: 12/13/2014

Rating	Y	N	N/A	Comments/Immediate Corrective Action[1]
Accident Prevention Plan (APP) and Site Safety and Health Plan (SSHP) General Requirements				
Are there new onsite personnel? • Did they receive pre-entry briefing and are their names recorded in field logbook or daily log? • Was the USACE PM made aware of the new personnel. • Required training and medical surveillance documentation received (e.g., 40-hr, 8 hr, etc.)?	X X X X			
Did personnel sign in/out of site?	X			
Daily tailgate safety meetings conducted and documented?	X			
Were new activities performed today? Were hazards identified, discussed during the daily safety tailgate, and incorporated into revised APP/SSHP?	X			OFF Load CARBON.
New materials brought on site? MSDSs available?	X			
Exclusion (EZ), Contamination Reduction (CRZ), and Support Zones (SZ) delineated and enforced?			X	
General housekeeping measures in place to prevent hazards?	X			
Emergency Planning				
Were there any changes to emergency contact names, telephone numbers, or hospital? If so, were site personnel made aware and was information distributed/reposted.		X		
Adequate safety equipment inventory available?	X			
Fire extinguisher available (monthly inspection of extinguisher will suffice)	X			
Eyewash station(s) functioning and in place (weekly inspection of eye wash station will suffice)?	X			
First aid supplies available (weekly inspection of first aid kit will suffice)?	X			
Communication equipment readily available for emergencies?	X			
Any reported accidents/incidents at this site? If so, were accident reporting procedures followed?		X		
Air Monitoring				
Monitoring equipment specified in SSHP available and in working order? Air monitoring instrumentation for this site includes – check each if required/on site, note deficiencies in comments: • Combustible gas meter • Organic vapor analyzer • Contaminant specific analyzer for benzene (if total organic vapor concentrations exceed 0.5 ppm)			X	
Monitoring equipment calibrated and calibration records			X	

Y = Satisfactory or Yes; N = Unsatisfactory or No, N/A = Not applicable

Rating	Y	N	N/A	Comments/Immediate Corrective Action[1]
available?			X	
Environmental and personnel monitoring performed as specified in SSHP?			X	
PPE				
Proper dermal protection worn by EA and subcontracted employees when handling/ contacting hazardous chemicals or contaminated environmental media?	X			
Required PPE (hard hats, safety boots / shoes, eye protection with side shields, hearing protection) being worn by EA and subcontracted employees?	X			
PPE inspection completed by SSHO?	X			
Drill Rig Operations				
Daily rig inspection completed? Any equipment problems?			X	
Drill rigs/elevated equipment maintaining minimum 10-ft distance from energized (50 kV) overhead power lines?			X	
Investigation-derived Waste (IDW)				
Wastes properly staged, secured, and labeled at end of day?			X	

Additional Comments:

John Knight
Site Safety and Health Officer's Signature

Dec 13 2016
Date

[1]If a deficiency is noted that cannot be immediately corrected, the SSHO will monitor the progress in correcting the deficiency and will document following:

- Date the deficiency was identified
- Description of the deficiency
- Name of the person responsible for correcting the deficiency
- Projected date of correction
- Actual date of correction.

EA ENGINEERING, SCIENCE AND TECHNOLOGY, INC.
SAFETY MEETING REPORT

Date: Dec 13 2016	**Time:** 0700	**Duration of meeting:** 10 min	**Project #** 62599.0201
Location: KAFB Bldg 19150		**Task:** OFF LOAD CARBON. PULL WIRE INSTALL GAUGES	

Type of meeting: X Daily ___ Weekly ___ Monthly ___ Other:_____

Items/Issues discussed:

1. Scope of work / OFF Load CARBON.
2. TRIP HAZARDS
3. 100% PPE
4. HOUSEKEEPING
5. MUSTER AREA

Attach minutes of safety meeting if taken.

Safety questions/issues raised:	Actions/Follow-up needed:
1. NONE	
2.	
3.	
4.	
5.	
6.	

Remarks:

Meeting conducted by: John Kuyuk Indeed Safety

HEALTH AND SAFETY ACTIVITY REPORT

Site: Bulk Fuel Facility Expansion Location: JBAFB Bldg 19150

Weather Cond.: Mild, warm Onsite Hours: From 0700 To 1500

Changes in PPE Levels[1]	Work Operations	Reasons for Change
No changes		

Site Safety and Health Plan Violations	Corrective Action Specified	Corrective Action Taken [2](yes/no)
No violations		

Observations and Comments:

No observations Good.

Completed by: John Kruger Date: Dec 12, 2016
Site Health and Safety Supervisor

[1]Only SSHO may change PPE levels, using only criteria specified in APP/SSHP.
[2]If a deficiency is noted that cannot be immediately corrected, the SSHO will monitor the progress in correcting the deficiency and will document following:

- Date the deficiency was identified
- Description of the deficiency
- Name of the person responsible for correcting the deficiency
- Projected date of correction
- Actual date of correction.

DAILY REPORT

(ATTACH ADDITIONAL SHEETS IF NECESSARY)

CONTRACT NAME:	Kirtland AFB Bulk Fuels Facility Expansion of Dissolved Plume GWTS Design	REPORT NO:	44
CONTRACT NUMBER:	W912DR-12-D-0006	REPORT DATE:	14DEC16
REVISION NUMBER:	-	REVISION DATE:	-
TASK ORDER NUMBER:	DM01	PROJECT NAME / LOCATION:	KAFB, ABQ, NM
PROJECT NUMBER:	62599DM01	PROJECT DESCRIPTION:	KAFB GWTS EXPANSION
PROJECT MANAGER:	Devon Jercinovic	FIELD QUALITY MANAGER:	ALEX SPILL
CONSTRUCTION MANAGER:	Alex Spalk	SITE SAFETY MANAGER:	~~Alex~~ John KAYATE

AM WEATHER:	cool, partly cloudy, breezy	PM WEATHER:	partly cloudy breezy	MAX TEMP (F):	58°		

SUMMARY OF WORK PERFORMED TODAY

Pulling wire, installing conduit, installing transmitter

HEALTH AND SAFETY REPORT

SAFETY ACTIONS TAKEN TODAY/SAFETY INSPECTIONS CONDUCTED (Include Observations, Safety Violations, Corrective Instructions Given, Corrective Actions Taken, and Results of Safety Inspections Conducted: No issues noted

TAILGATE TOPICS: Housekeeping, pinch points, PPE requirements

SAFE BEHAVIOR OBSERVATIONS/SELF-ASSESSMENTS:

Safe behaviors observed

OPERATIONS / PRODUCTION REPORT

WORK FORCE – CONTRACTOR AND SUBCONTRACTOR

Company	Cumulative Total of Work Hours From Previous Report	Total Hours Today	Total Work Hours From Start of Injection Event
Wilson Electric	240	16	256
I+C Solutions	28	4	32
Techxis	209	8	217

EQUIPMENT ON HAND

Description of Equipment	Make/Model/Manufacturer	Equipment ID Number	Inspection Performed By
Manlift	GS-1930 Genie	10145036	Roberto Guzzola
Manlift	GS-1930 Genie		Roberto Guzzola
21,000 Gals - Frac Tank		253224	

COMMENTS (acceptance status, inspection findings, etc.):

WORK AND/OR TESTS ACCOMPLISHED OR IN PROGRESS

Performed Work / Test for Today: pulled wire through conduits, installed conduit, installed transmitter

Planned Work / Test for Tomorrow:

GAC vessel backwash, wiring, pipe modification

Planned Work / Test for Next Week:

Nom

CHANGED CONDITIONS/DELAY/CONFLICTS ENCOUNTERED (List any conflicts with the project [i.e., scope of work and/or drawings], delays to the project attributable to site and weather conditions, etc.

VISITORS AND DISCUSSIONS: Trent Simple, discussed progress and work completed

QUALITY CONTROL REPORT

MATERIALS DELIVERED TO JOB SITE

Quantity/Volume/ Weight	Description of Materials Received	Make/Model/Manufacturer	Material Lot Number	Inspection Performed By
Nom				

COMMENTS (acceptance status, inspection findings, etc.):

INSPECTIONS PERFORMED

Task/Activity Inspected	Inspection Performed	Findings
Visual inspection	conduit and transmitters	OK

TESTS PERFORMED

Task/Activity Tested	Test Performed	Test Results (Pass/Fail) - Criteria
Nom		

QUALITY ISSUES AND RESOLUTIONS:

SUBMITTALS INSPECTION / REVIEW

Submittal No.	Submittal Description	Specification/Plan Reference	Submittal Approved?		Comment/Reason/Action
NA	Daily Report	–	Yes ☐	No ☐	Pending
NA	SBO	–	Yes ☐	No ☐	Pending
NA	PTSP	–	Yes ☐	No ☐	Pending

REGULATORY COMPLIANCE REPORT

PERMIT INSPECTIONS PERFORMED: Nom

WASTE ACCUMULATION/STOCKPILE AREA INSPECTION

Inspection Performed By:		Signature of Inspector:	
Accumulation / Stockpile Area Inspected:	NA		

No of Bins:		No of Tankers		No of Roll-Off Boxes:		No. of Tanks	

Inspection Results: NA

GENERAL COMMENTS

General Comments~ (rework, directives, etc.): None
ATTACHMENTS
List of Attachments: (examples, as applicable: submittals, meeting minutes, safety meeting minutes, COCs, weight tickets, manifests, profiles, rework item list, RFIs, DCNs, photographs, etc.): Photo log and safety documentation
NOTE: Write all entries legibly in ink. Line out all unused portions or designate as "not applicable". Preparer signs first and last name on each completed daily report. This form may be filled out electronically and signed electronically. Alec Spill (PREPARER'S SIGNATURE) 14DEC16 (DATE)

Location: Well Control House
Description: Newly Installed Transmitter
Date: 14 December 2016 Direction: North

Location: Well Control House
Description: Newly Installed Transmitter
Date: 14 December 2016 Direction: North

Location: Existing Influent Pump Skid
Description: Newly Installed Conduit
Date: 14 December 2016 Direction: Northeast

Location: Newly Installed Influent Pump Skid
Description: Newly Installed Conduit
Date: 14 December 2016 Direction: Northwest

Location: Newly Installed Effluent Pump Skid
Description: Newly Installed Conduit
Date: 14 December 2016 Direction: West

Location: Existing Effluent Pump Skid
Description: Newly Installed Conduit
Date: 14 December 2016 Direction: West

EA Engineering, Science, and Technology, Inc.

DAILY SAFETY INSPECTION CHECKLIST (TO BE COMPLETED EACH DAY OF CONSTRUCTION OR HTRW SITE ACTIVITIES)

Site: Bulk Fuel Facility Expans
Location: 147FB Bldg 19150
Project No.: 62599DM01
Client: USACE

Prepared by SSHO: John Kapate
Project Manager: Devon Jerconovic
Date: 12/14/2016

Rating	Y	N	N/A	Comments/Immediate Corrective Action[1]
Accident Prevention Plan (APP) and Site Safety and Health Plan (SSHP) General Requirements				
Are there new onsite personnel? • Did they receive pre-entry briefing and are their names recorded in field logbook or daily log? • Was the USACE PM made aware of the new personnel. • Required training and medical surveillance documentation received (e.g., 40-hr, 8 hr, etc.)?		X	X X X	
Did personnel sign in/out of site?	X			
Daily tailgate safety meetings conducted and documented?	X			
Were new activities performed today? Were hazards identified, discussed during the daily safety tailgate, and incorporated into revised APP/SSHP?		X		
New materials brought on site? MSDSs available?		X		
Exclusion (EZ), Contamination Reduction (CRZ), and Support Zones (SZ) delineated and enforced?			X	
General housekeeping measures in place to prevent hazards?	X			
Emergency Planning				
Were there any changes to emergency contact names, telephone numbers, or hospital? If so, were site personnel made aware and was information distributed/reposted.		X		
Adequate safety equipment inventory available?	X			
Fire extinguisher available (monthly inspection of extinguisher will suffice)	X			
Eyewash station(s) functioning and in place (weekly inspection of eye wash station will suffice)?	X			
First aid supplies available (weekly inspection of first aid kit will suffice)?	X			
Communication equipment readily available for emergencies?	X			
Any reported accidents/incidents at this site? If so, were accident reporting procedures followed?		X		
Air Monitoring				
Monitoring equipment specified in SSHP available and in working order? Air monitoring instrumentation for this site includes – check each if required/on site, note deficiencies in comments: • Combustible gas meter • Organic vapor analyzer • Contaminant specific analyzer for benzene (if total organic vapor concentrations exceed 0.5 ppm)			X	
Monitoring equipment calibrated and calibration records			X	

Y = Satisfactory or Yes; N = Unsatisfactory or No, N/A = Not applicable

Rating	Y	N	N/A	Comments/Immediate Corrective Action[1]
available?			X	
Environmental and personnel monitoring performed as specified in SSHP?			X	
PPE				
Proper dermal protection worn by EA and subcontracted employees when handling/ contacting hazardous chemicals or contaminated environmental media?	X			
Required PPE (hard hats, safety boots / shoes, eye protection with side shields, hearing protection) being worn by EA and subcontracted employees?	X			
PPE inspection completed by SSHO?	X			
Drill Rig Operations				
Daily rig inspection completed? Any equipment problems?			X	
Drill rigs/elevated equipment maintaining minimum 10-ft distance from energized (50 kV) overhead power lines?			X	
Investigation-derived Waste (IDW)				
Wastes properly staged, secured, and labeled at end of day?			Y	

Additional Comments:

Site Safety and Health Officer's Signature

Dec 14, 2016
Date

[1]If a deficiency is noted that cannot be immediately corrected, the SSHO will monitor the progress in correcting the deficiency and will document following:

- Date the deficiency was identified
- Description of the deficiency
- Name of the person responsible for correcting the deficiency
- Projected date of correction
- Actual date of correction.

EA ENGINEERING, SCIENCE AND TECHNOLOGY, INC.
SAFETY MEETING REPORT

Date: Dec 13, 2016	Time: 0700	Duration of meeting: 10 min	Project # 62591.DM.01
Location: KAFB Bldg 19150		Task: Install conduit meters.	

Type of meeting: X Daily ___ Weekly ___ Monthly ___ Other: _____

Items/Issues discussed:

1. Scope of work.
2. Housekeeping
3. 100% PPE
4. Pinch Points
5. Inspection of Equipment & Tools

Attach minutes of safety meeting if taken.

Safety questions/issues raised:	Actions/Follow-up needed:
1. None	
2.	
3.	
4.	
5.	
6.	

Remarks:

Meeting conducted by:

John Kayuda Indeed Safety

HEALTH AND SAFETY ACTIVITY REPORT

Site: Bulk Fuel Facility Expansion Location: KAFB Bldg 19150

Weather Cond.: Mild Onsite Hours: From 0700 To 1500

Changes in PPE Levels[1]	Work Operations	Reasons for Change
No Changes		

Site Safety and Health Plan Violations	Corrective Action Specified	Corrective Action Taken[2] (yes/no)
NO Violations		

Observations and Comments:

Wilson using SAWZAW to cut strut.
Advise Employee to use a TRIPod to secure piece Before cutting. Advoid cutting Hand

Completed by: John Knight Date: Dec 14 2016
Site Health and Safety Supervisor

[1]Only SSHO may change PPE levels, using only criteria specified in APP/SSHP.
[2]If a deficiency is noted that cannot be immediately corrected, the SSHO will monitor the progress in correcting the deficiency and will document following:

- Date the deficiency was identified
- Description of the deficiency
- Name of the person responsible for correcting the deficiency
- Projected date of correction
- Actual date of correction.

DAILY REPORT

(ATTACH ADDITIONAL SHEETS IF NECESSARY)

CONTRACT NAME:	Kirtland AFB Bulk Fuels Facility Expansion of Dissolved Plume GWTS Design	REPORT NO:	45
CONTRACT NUMBER:	W912DR-12-D-0006	REPORT DATE:	15DEC16
REVISION NUMBER:	-	REVISION DATE:	-
TASK ORDER NUMBER:	DM01	PROJECT NAME / LOCATION:	KAFB, ABQ, NM
PROJECT NUMBER:	62599DM01	PROJECT DESCRIPTION:	KAFB GWTS Expansion
PROJECT MANAGER:	Devon Jercinovic	FIELD QUALITY MANAGER:	Kady Garcia
CONSTRUCTION MANAGER:	Alex Spiller	SITE SAFETY MANAGER:	John Kayate

AM WEATHER:	Cool, cloudy	PM WEATHER:	partially cloudy cool	MAX TEMP (F):	62		

SUMMARY OF WORK PERFORMED TODAY

Replace mag-flow meters, replace influent skid motor, pulling wiring
Flow meter wiring

HEALTH AND SAFETY REPORT

SAFETY ACTIONS TAKEN TODAY/SAFETY INSPECTIONS CONDUCTED (Include Observations, Safety Violations, Corrective Instructions Given, Corrective Actions Taken, and Results of Safety Inspections Conducted:

no issues

TAILGATE TOPICS:

PPE, power tool safety, struck by/caught between, eyewash stations,

SAFE BEHAVIOR OBSERVATIONS/SELF-ASSESSMENTS:

Safe behavior observed

OPERATIONS / PRODUCTION REPORT

WORK FORCE – CONTRACTOR AND SUBCONTRACTOR

Company	Cumulative Total of Work Hours From Previous Report	Total Hours Today	Total Work Hours From Start of Injection Event
Rupert	524	2	526
Techsas	217	14	231
Wilson	256	16	272
ICS	32	24	56

EQUIPMENT ON HAND

Description of Equipment	Make/Model/Manufacturer	Equipment ID Number	Inspection Performed By
21,000 Frac Tank		253224	
Manlift	GS-1930 Genie	1014 5036	Trevis Thomson

COMMENTS (acceptance status, inspection findings, etc.):

OK

WORK AND/OR TESTS ACCOMPLISHED OR IN PROGRESS

Performed Work / Test for Today: magnetic flow meter installations
influent skid motor installation and alignment, wire pulling

Planned Work / Test for Tomorrow:

Pulling wire

Planned Work / Test for Next Week:

None

CHANGED CONDITIONS/DELAY/CONFLICTS ENCOUNTERED (List any conflicts with the project [i.e., scope of work and/or drawings], delays to the project attributable to site and weather conditions, etc. no issues

VISITORS AND DISCUSSIONS: none

QUALITY CONTROL REPORT

MATERIALS DELIVERED TO JOB SITE

Quantity/Volume/ Weight	Description of Materials Received	Make/Model/Manufacturer	Material Lot Number	Inspection Performed By
3	Flex piping for back wash			Kady Garcia
6	Cam fittings			Kady Garcia

COMMENTS (acceptance status, inspection findings, etc.):

INSPECTIONS PERFORMED

Task/Activity Inspected	Inspection Performed	Findings
mag flow meter	Visual inspection	OK
Wiring	Visual inspection	OK

TESTS PERFORMED

Task/Activity Tested	Test Performed	Test Results (Pass/Fail) - Criteria
Alignment	Motor alignment	Pass

QUALITY ISSUES AND RESOLUTIONS: NA

SUBMITTALS INSPECTION / REVIEW

Submittal No.	Submittal Description	Specification/Plan Reference	Submittal Approved?		Comment/Reason/Action
NA	Daily Report	–	Yes ☐	No ☐	Pending
NA	SBO	–	Yes ☐	No ☐	Pending
NA	PTSP	–	Yes ☐	No ☐	Pending

REGULATORY COMPLIANCE REPORT

PERMIT INSPECTIONS PERFORMED: none

WASTE ACCUMULATION/STOCKPILE AREA INSPECTION

Inspection Performed By:				Signature of Inspector:			
Accumulation / Stockpile Area Inspected:	NA						
No of Bins:		No of Tankers		No of Roll-Off Boxes:		No. of Tanks	

Inspection Results: NA

GENERAL COMMENTS

General Comments~ (rework, directives, etc.):

none

ATTACHMENTS

List of Attachments: (examples, as applicable: submittals, meeting minutes, safety meeting minutes, COCs, weight tickets, manifests, profiles, rework item list, RFIs, DCNs, photographs, etc.):

photo log and safety documentation

NOTE: Write all entries legibly in ink. Line out all unused portions or designate as "not applicable". Preparer signs first and last name on each completed daily report. This form may be filled out electronically and signed electronically.

Kaylee A. Ingrish — PREPARER'S SIGNATURE

15 DEC 16 — DATE

Location: Influent Feed Tank Ground
Description: Newly Delivered Flex Hose and Cam Fittings
Date: 15 December 2016 Direction: Down

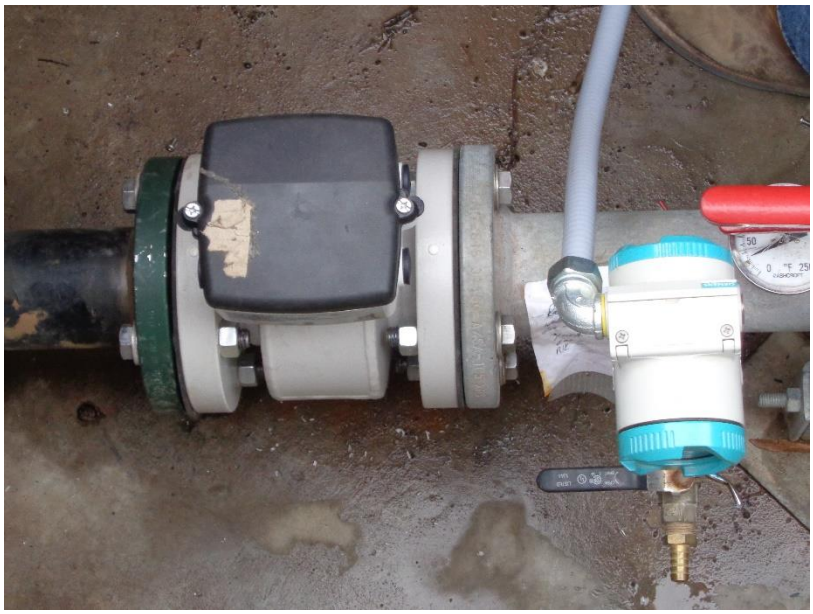

Location: KAFB-106228
Description: Newly Installed Magnetic Flow Meter and Pressure Transmitter
Date: 15 December 2016 Direction: Down

Location: Well Control House
Description: Newly Installed Magnetic Flow Meters and Pressure Transmitters
Date: 15 December 2016 Direction: North

Location: New Influent Pump Skid
Description: Newly Installed and Aligned Motor
Date: 15 December 2016 Direction: Down

Location: Newly Installed GAC Vessels
Description: Newly Installed GAC Vessels Backwashed
Date: 15 December 2016 Direction: North

Location: South of GWTS (Outside)
Description: Backwash Connection to 21,000 Gallon Frac Tank
Date: 15 December 2016 Direction: South

Location: Effluent Pump Skid
Description: Newly Installed Wiring
Date: 15 December 2016 Direction: North

Location: New Effluent Pump Skid
Description: Newly Aligned Motor
Date: 15 December 2016 Direction: North

EA Engineering, Science, and Technology, Inc.

DAILY SAFETY INSPECTION CHECKLIST (TO BE COMPLETED EACH DAY OF CONSTRUCTION OR HTRW SITE ACTIVITIES)

Site: Bulk Fuel Facility Expans
Location: 147FB Bldg 19150
Project No.: 62599DM01
Client: USACE

Prepared by SSHO: John Kapate
Project Manager: Devon Jerconovic
Date: 12/14/2016

Rating	Y	N	N/A	Comments/Immediate Corrective Action[1]
Accident Prevention Plan (APP) and Site Safety and Health Plan (SSHP) General Requirements				
Are there new onsite personnel? • Did they receive pre-entry briefing and are their names recorded in field logbook or daily log? • Was the USACE PM made aware of the new personnel. • Required training and medical surveillance documentation received (e.g., 40-hr, 8 hr, etc.)?		X	X X X	
Did personnel sign in/out of site?	X			
Daily tailgate safety meetings conducted and documented?	X			
Were new activities performed today? Were hazards identified, discussed during the daily safety tailgate, and incorporated into revised APP/SSHP?		X		
New materials brought on site? MSDSs available?		X		
Exclusion (EZ), Contamination Reduction (CRZ), and Support Zones (SZ) delineated and enforced?			X	
General housekeeping measures in place to prevent hazards?	X			
Emergency Planning				
Were there any changes to emergency contact names, telephone numbers, or hospital? If so, were site personnel made aware and was information distributed/reposted.		X		
Adequate safety equipment inventory available?	X			
Fire extinguisher available (monthly inspection of extinguisher will suffice)	X			
Eyewash station(s) functioning and in place (weekly inspection of eye wash station will suffice)?	X			
First aid supplies available (weekly inspection of first aid kit will suffice)?	X			
Communication equipment readily available for emergencies?	X			
Any reported accidents/incidents at this site? If so, were accident reporting procedures followed?		X		
Air Monitoring				
Monitoring equipment specified in SSHP available and in working order? Air monitoring instrumentation for this site includes – check each if required/on site, note deficiencies in comments: • Combustible gas meter • Organic vapor analyzer • Contaminant specific analyzer for benzene (if total organic vapor concentrations exceed 0.5 ppm)			X	
Monitoring equipment calibrated and calibration records			X	

Y = Satisfactory or Yes; N = Unsatisfactory or No, N/A = Not applicable

Rating	Y	N	N/A	Comments/Immediate Corrective Action[1]
available?			X	
Environmental and personnel monitoring performed as specified in SSHP?			X	
PPE				
Proper dermal protection worn by EA and subcontracted employees when handling/ contacting hazardous chemicals or contaminated environmental media?	X			
Required PPE (hard hats, safety boots / shoes, eye protection with side shields, hearing protection) being worn by EA and subcontracted employees?	X			
PPE inspection completed by SSHO?	X			
Drill Rig Operations				
Daily rig inspection completed? Any equipment problems?			X	
Drill rigs/elevated equipment maintaining minimum 10-ft distance from energized (50 kV) overhead power lines?			X	
Investigation-derived Waste (IDW)				
Wastes properly staged, secured, and labeled at end of day?			Y	

Additional Comments:

Site Safety and Health Officer's Signature

Dec 14, 2016
Date

[1]If a deficiency is noted that cannot be immediately corrected, the SSHO will monitor the progress in correcting the deficiency and will document following:

- Date the deficiency was identified
- Description of the deficiency
- Name of the person responsible for correcting the deficiency
- Projected date of correction
- Actual date of correction.

EA ENGINEERING, SCIENCE AND TECHNOLOGY, INC.
SAFETY MEETING REPORT

Date: Dec 13, 2016	Time: 0700	Duration of meeting: 10 min	Project # 62591.DM.01
Location: KAFB Bldg 19150		Task: Install conduit meters.	

Type of meeting: X Daily ___ Weekly ___ Monthly ___ Other: _____

Items/Issues discussed:

1. Scope of work.
2. Housekeeping
3. 100% PPE
4. Pinch Points
5. Inspection of Equipment & Tools

Attach minutes of safety meeting if taken.

Safety questions/issues raised:	Actions/Follow-up needed:
1. None	
2.	
3.	
4.	
5.	
6.	

Remarks:

Meeting conducted by:

John Kayuda Indeed Safety

HEALTH AND SAFETY ACTIVITY REPORT

Site: Bulk Fuel Facility Expansion Location: KAFB Bldg 19150

Weather Cond.: Mild Onsite Hours: From 0700 To 1500

Changes in PPE Levels[1]	Work Operations	Reasons for Change
No Changes		

Site Safety and Health Plan Violations	Corrective Action Specified	Corrective Action Taken[2] (yes/no)
NO Violations		

Observations and Comments:

Wilson using SAWZAW to cut strut.
Advise Employee to use a TRIPod to secure piece Before cutting. Advoid cutting Hand

Completed by: John Knight Date: Dec 14 2016
Site Health and Safety Supervisor

[1]Only SSHO may change PPE levels, using only criteria specified in APP/SSHP.
[2]If a deficiency is noted that cannot be immediately corrected, the SSHO will monitor the progress in correcting the deficiency and will document following:

- Date the deficiency was identified
- Description of the deficiency
- Name of the person responsible for correcting the deficiency
- Projected date of correction
- Actual date of correction.

DAILY REPORT

(ATTACH ADDITIONAL SHEETS IF NECESSARY)

CONTRACT NAME:	Kirtland AFB Bulk Fuels Facility Expansion of Dissolved Plume GWTS Design	REPORT NO:	46
CONTRACT NUMBER:	W912DR-12-D-0006	REPORT DATE:	16 DEC 16
REVISION NUMBER:	-	REVISION DATE:	-
TASK ORDER NUMBER:	DM01	PROJECT NAME / LOCATION:	KAFB, ABQ, NM
PROJECT NUMBER:	62599DM01	PROJECT DESCRIPTION:	KAFB GWTS EXPANSION
PROJECT MANAGER:	Devon Jercinovic	FIELD QUALITY MANAGER:	Alex Spiller
CONSTRUCTION MANAGER:	Alex Spiller	SITE SAFETY MANAGER:	John Koyate

AM WEATHER:	cool, cloudy breezy	PM WEATHER:	cold windy cloudy	MAX TEMP (F):	59		

SUMMARY OF WORK PERFORMED TODAY

Pull wires, install flowmeters, remove old flowmeters and replace w/ blank spools, connect wiring

HEALTH AND SAFETY REPORT

SAFETY ACTIONS TAKEN TODAY/SAFETY INSPECTIONS CONDUCTED (Include Observations, Safety Violations, Corrective Instructions Given, Corrective Actions Taken, and Results of Safety Inspections Conducted:

None

TAILGATE TOPICS: Safe work practices, tool safety, welding safety, housekeeping

SAFE BEHAVIOR OBSERVATIONS/SELF-ASSESSMENTS:

Safe behavior observed

OPERATIONS / PRODUCTION REPORT

WORK FORCE – CONTRACTOR AND SUBCONTRACTOR

Company	Cumulative Total of Work Hours From Previous Report	Total Hours Today	Total Work Hours From Start of Injection Event
Techsos	231	2	233
Wilson Electric	272	12	284
Rupert	256 ~~526~~ 270	14	270
I+C solutions	56	14	70

EQUIPMENT ON HAND

Description of Equipment	Make/Model/Manufacturer	Equipment ID Number	Inspection Performed By
21,000 WATER TANK			Alex Spiller
Manlift	Genie GS-1930		Mike Clifcorn
Manlift	Genie GS-1930	101450360	Roberto Gurola
DC WELDER	Miller Pipe Pro	LH0113526	John Koyate

COMMENTS (acceptance status, inspection findings, etc.):

OK

WORK AND/OR TESTS ACCOMPLISHED OR IN PROGRESS

Performed Work / Test for Today: Pull wire, install Flowmeters, connect wires, replace old flowmeters w/ blank pipe "spools"

Planned Work / Test for Tomorrow:

None

Planned Work / Test for Next Week:

pull wire, wire 2nd treatment train

CHANGED CONDITIONS/DELAY/CONFLICTS ENCOUNTERED (List any conflicts with the project [i.e., scope of work and/or drawings], delays to the project attributable to site and weather conditions, etc.

VISITORS AND DISCUSSIONS: None

QUALITY CONTROL REPORT

MATERIALS DELIVERED TO JOB SITE

Quantity/Volume/ Weight	Description of Materials Received	Make/Model/Manufacturer	Material Lot Number	Inspection Performed By
None				

COMMENTS (acceptance status, inspection findings, etc.):

INSPECTIONS PERFORMED

Task/Activity Inspected	Inspection Performed	Findings
Flowmeters	Visual inspection	OK
Blank Pipe	Visual inspection	No leaks / OK

TESTS PERFORMED

Task/Activity Tested	Test Performed	Test Results (Pass/Fail) - Criteria
None		

QUALITY ISSUES AND RESOLUTIONS: None

SUBMITTALS INSPECTION / REVIEW

Submittal No.	Submittal Description	Specification/Plan Reference	Submittal Approved?		Comment/Reason/Action
NA	Daily Report	–	Yes ☐	No ☐	Pending
NA	SBO	–	Yes ☐	No ☐	Pending
NA	PTSP	–	Yes ☐	No ☐	Pending

REGULATORY COMPLIANCE REPORT

PERMIT INSPECTIONS PERFORMED: None

WASTE ACCUMULATION/STOCKPILE AREA INSPECTION

Inspection Performed By:				Signature of Inspector:			
Accumulation / Stockpile Area Inspected:	ND						
No of Bins:		No of Tankers		No of Roll-Off Boxes:		No. of Tanks	

Inspection Results:

NA

GENERAL COMMENTS

General Comments~ (rework, directives, etc.): OK
ATTACHMENTS
List of Attachments: (examples, as applicable: submittals, meeting minutes, safety meeting minutes, COCs, weight tickets, manifests, profiles, rework item list, RFIs, DCNs, photographs, etc.): Photo log and safety documentation
NOTE: Write all entries legibly in ink. Line out all unused portions or designate as "not applicable". Preparer signs first and last name on each completed daily report. This form may be filled out electronically and signed electronically. Alex Spill (PREPARER'S SIGNATURE) 16DEC16 (DATE)

Location: Existing Influent Pump Skid
Description: Newly Installed Blank Pipe or "Spool"
Date: 16 December 2016 Direction: West

Location: Existing Influent Pump Skid
Description: Newly Installed Magnetic Flow Meter
Date: 16 December 2016 Direction: Northeast

Location: Newly Installed Effluent Pump Skid
Description: Newly Installed Magnetic Flow Meter
Date: 16 December 2016 Direction: Northwest

Location: Existing Effluent Pump Skid
Description: Newly Installed Magnetic Flowmeter and Tee with Blind Flange
Date: 16 December 2016 Direction: North

Location: Newly Installed Influent Pump Skid
Description: Newly Wired Magnetic Flowmeter
Date: 16 December 2016 Direction: West

EA Engineering, Science, and Technology, Inc.

DAILY SAFETY INSPECTION CHECKLIST
(TO BE COMPLETED EACH DAY OF CONSTRUCTION OR HTRW SITE ACTIVITIES)

Site: Bulk Fuel Facility Expan
Location: KIAFB Bldg 19150
Project No.: 62594DM01
Client: USACE

Prepared by SSHO: John Kenyon
Project Manager: Devon Jeremovic
Date: 12/16/2016

Rating	Y	N	N/A	Comments/Immediate Corrective Action[1]
Accident Prevention Plan (APP) and Site Safety and Health Plan (SSHP) General Requirements				
Are there new onsite personnel? • Did they receive pre-entry briefing and are their names recorded in field logbook or daily log? • Was the USACE PM made aware of the new personnel. • Required training and medical surveillance documentation received (e.g., 40-hr, 8 hr, etc.)?		X	X X X	
Did personnel sign in/out of site?	X			
Daily tailgate safety meetings conducted and documented?	X			
Were new activities performed today? Were hazards identified, discussed during the daily safety tailgate, and incorporated into revised APP/SSHP?		X		
New materials brought on site? MSDSs available?		X		
Exclusion (EZ), Contamination Reduction (CRZ), and Support Zones (SZ) delineated and enforced?			X	
General housekeeping measures in place to prevent hazards?	X			
Emergency Planning				
Were there any changes to emergency contact names, telephone numbers, or hospital? If so, were site personnel made aware and was information distributed/reposted.		X		
Adequate safety equipment inventory available?	X			
Fire extinguisher available (monthly inspection of extinguisher will suffice)	X			
Eyewash station(s) functioning and in place (weekly inspection of eye wash station will suffice)?	X			
First aid supplies available (weekly inspection of first aid kit will suffice)?	X			
Communication equipment readily available for emergencies?	X			
Any reported accidents/incidents at this site? If so, were accident reporting procedures followed?		X		
Air Monitoring				
Monitoring equipment specified in SSHP available and in working order? Air monitoring instrumentation for this site includes – check each if required/on site, note deficiencies in comments: • Combustible gas meter • Organic vapor analyzer • Contaminant specific analyzer for benzene (if total organic vapor concentrations exceed 0.5 ppm)			X	
Monitoring equipment calibrated and calibration records			X	

Y = Satisfactory or Yes; N = Unsatisfactory or No, N/A = Not applicable

Rating	Y	N	N/A	Comments/Immediate Corrective Action[1]
available?			X	
Environmental and personnel monitoring performed as specified in SSHP?			X	
PPE				
Proper dermal protection worn by EA and subcontracted employees when handling/ contacting hazardous chemicals or contaminated environmental media?	X			
Required PPE (hard hats, safety boots / shoes, eye protection with side shields, hearing protection) being worn by EA and subcontracted employees?	X			
PPE inspection completed by SSHO?	X			
Drill Rig Operations				
Daily rig inspection completed? Any equipment problems?			X	
Drill rigs/elevated equipment maintaining minimum 10-ft distance from energized (50 kV) overhead power lines?			X	
Investigation-derived Waste (IDW)				
Wastes properly staged, secured, and labeled at end of day?			X	

Additional Comments:

John Kajeck
Site Safety and Health Officer's Signature

12/16/2014
Date

[1]If a deficiency is noted that cannot be immediately corrected, the SSHO will monitor the progress in correcting the deficiency and will document following:

- Date the deficiency was identified
- Description of the deficiency
- Name of the person responsible for correcting the deficiency
- Projected date of correction
- Actual date of correction.

EA ENGINEERING, SCIENCE AND TECHNOLOGY, INC.
SAFETY MEETING REPORT

Date: 12/16/2016	Time: 0700	Duration of meeting: 10 min	Project # 625998M01
Location:		Task: install meters, pull wire, shut system down	

Type of meeting: Y Daily ___ Weekly ___ Monthly ___ Other: _____

Items/Issues discussed:

1. Housekeeping
2. Scope of work
3. Welding arc
4. Pinch points
5. PPE 100%

Attach minutes of safety meeting if taken.

Safety questions/issues raised:	Actions/Follow-up needed:
1. None	
2.	
3.	
4.	
5.	
6.	

Remarks:

Meeting conducted by:
John Kazala Indeed safety

HEALTH AND SAFETY ACTIVITY REPORT

Site: Bulk Fuel Facility Expansion Location: KAFB Bldg 19150

Weather Cond.: Windy Onsite Hours: From 0700 To 1400

Changes in PPE Levels[1]	Work Operations	Reasons for Change
No changes		

Site Safety and Health Plan Violations	Corrective Action Specified	Corrective Action Taken [2](yes/no)
No Violations		

Observations and Comments:
All observation Good

Completed by: John Kuyath Date: Dec 14, 2016
Site Health and Safety Supervisor

[1]Only SSHO may change PPE levels, using only criteria specified in APP/SSHP.
[2]If a deficiency is noted that cannot be immediately corrected, the SSHO will monitor the progress in correcting the deficiency and will document following:

- Date the deficiency was identified
- Description of the deficiency
- Name of the person responsible for correcting the deficiency
- Projected date of correction
- Actual date of correction.

DAILY REPORT

(ATTACH ADDITIONAL SHEETS IF NECESSARY)

CONTRACT NAME:	Kirtland AFB Bulk Fuels Facility Expansion of Dissolved Plume GWTS Design	REPORT NO:	47
CONTRACT NUMBER:	W912DR-12-D-0006	REPORT DATE:	21 DEC 16
REVISION NUMBER:	-	REVISION DATE:	-
TASK ORDER NUMBER:	DM01	PROJECT NAME / LOCATION:	KAFB, ABQ, NM
PROJECT NUMBER:	62599DM01	PROJECT DESCRIPTION:	KAFB GWTS Expansion
PROJECT MANAGER:	Devon Jercinovic	FIELD QUALITY MANAGER:	Kady Garcia
CONSTRUCTION MANAGER:	Alex Spiller	SITE SAFETY MANAGER:	John Kayate

AM WEATHER:	Cold, Cloudy, Calm	PM WEATHER:	partially Cloudy, cool	MAX TEMP (°F):	51		

SUMMARY OF WORK PERFORMED TODAY

pulling wiring, wiring connecting

HEALTH AND SAFETY REPORT

SAFETY ACTIONS TAKEN TODAY/SAFETY INSPECTIONS CONDUCTED (Include Observations, Safety Violations, Corrective Instructions Given, Corrective Actions Taken, and Results of Safety Inspections Conducted:

none

TAILGATE TOPICS:

Lock out tag out, ladder safety, overhead hazards, lift safety, PPE

SAFE BEHAVIOR OBSERVATIONS/SELF-ASSESSMENTS:

Safe behavior observed

OPERATIONS / PRODUCTION REPORT

WORK FORCE – CONTRACTOR AND SUBCONTRACTOR

Company	Cumulative Total of Work Hours From Previous Report	Total Hours Today	Total Work Hours From Start of Injection Event
Wilson Electric	284	16	300

EQUIPMENT ON HAND

Description of Equipment	Make/Model/Manufacturer	Equipment ID Number	Inspection Performed By
21,000 Water Storage Tank			Alex Spiller
Manlift	Genie GS-1930	1014 5036	Roberto Gurola

COMMENTS (acceptance status, inspection findings, etc.):

OK

WORK AND/OR TESTS ACCOMPLISHED OR IN PROGRESS

Performed Work / Test for Today: pulled wire, connected wires

Planned Work / Test for Tomorrow:

none

Planned Work / Test for Next Week:

Counter installation

CHANGED CONDITIONS/DELAY/CONFLICTS ENCOUNTERED (List any conflicts with the project [i.e., scope of work and/or drawings], delays to the project attributable to site and weather conditions, etc. none

VISITORS AND DISCUSSIONS: Trent Simpler

QUALITY CONTROL REPORT

MATERIALS DELIVERED TO JOB SITE

Quantity/Volume/ Weight	Description of Materials Received	Make/Model/Manufacturer	Material Lot Number	Inspection Performed By
none				

COMMENTS (acceptance status, inspection findings, etc.):

INSPECTIONS PERFORMED

Task/Activity Inspected	Inspection Performed	Findings
none		

TESTS PERFORMED

Task/Activity Tested	Test Performed	Test Results (Pass/Fail) - Criteria
Phase rotation	CC Phase rotation 480 for new skids	Pass (counterclock wise)
voltage verification	480V for skids	Pass

QUALITY ISSUES AND RESOLUTIONS: none

SUBMITTALS INSPECTION / REVIEW

Submittal No.	Submittal Description	Specification/Plan Reference	Submittal Approved?		Comment/Reason/Action
NA	Daily Report	–	Yes ☐	No ☐	Pending
NA	SBO	–	Yes ☐	No ☐	Pending
NA	PTSP	–	Yes ☐	No ☐	Pending

REGULATORY COMPLIANCE REPORT

PERMIT INSPECTIONS PERFORMED: none

WASTE ACCUMULATION/STOCKPILE AREA INSPECTION

Inspection Performed By:				Signature of Inspector:			
Accumulation / Stockpile Area Inspected:	NA						
No of Bins:		No of Tankers		No of Roll-Off Boxes:		No. of Tanks	
Inspection Results:	NA						

GENERAL COMMENTS

General Comments~ (rework, directives, etc.): ok
ATTACHMENTS
List of Attachments: (examples, as applicable: submittals, meeting minutes, safety meeting minutes, COCs, weight tickets, manifests, profiles, rework item list, RFIs, DCNs, photographs, etc.): Photo log and safety documentation
NOTE: Write all entries legibly in ink. Line out all unused portions or designate as "not applicable". Preparer signs first and last name on each completed daily report. This form may be filled out electronically and signed electronically. Kelly A. Garcia (PREPARER'S SIGNATURE) 21 DEC 16 (DATE)

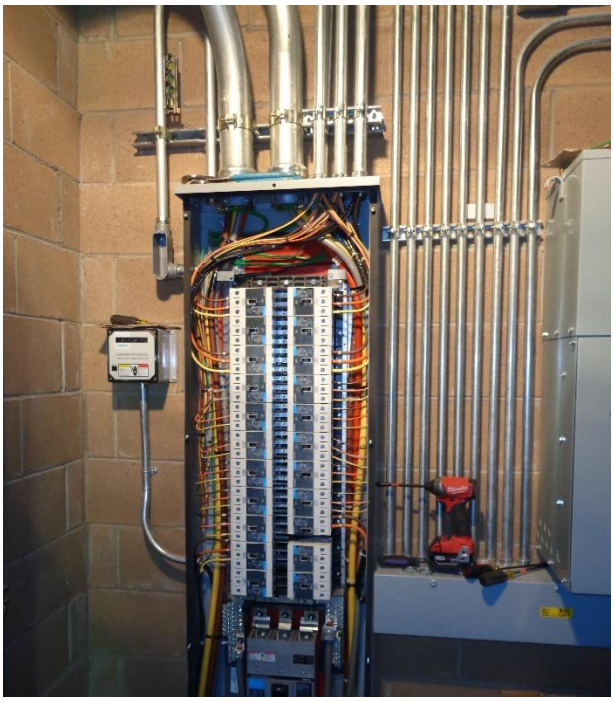

Location: HMI Control Room
Description: Newly Connected Wiring
Date: 21 December 2016 Direction: East

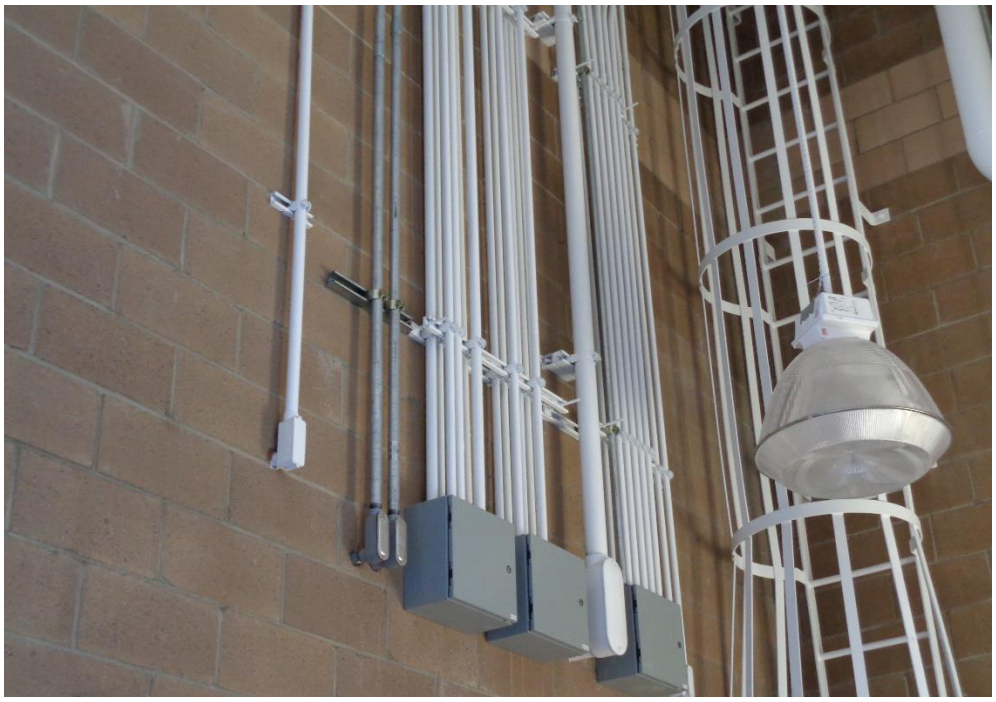

Location: East Wall of GWTS
Description: Newly Installed Wiring in Conduit
Date: 21 December 2016 Direction: Southeast

EA Engineering, Science, and Technology, Inc.

DAILY SAFETY INSPECTION CHECKLIST (TO BE COMPLETED EACH DAY OF CONSTRUCTION OR HTRW SITE ACTIVITIES)

Site: Bulk Fuel Facility Expan
Location: KAFB Bldg. 1950
Project No.: 62599D1M01
Client: USACE

Prepared by SSHO: John Kraynak
Project Manager: Devon Jerzewski
Date: 12/21/2016

Rating	Y	N	N/A	Comments/Immediate Corrective Action[1]
Accident Prevention Plan (APP) and Site Safety and Health Plan (SSHP) General Requirements				
Are there new onsite personnel? • Did they receive pre-entry briefing and are their names recorded in field logbook or daily log? • Was the USACE PM made aware of the new personnel. • Required training and medical surveillance documentation received (e.g., 40-hr, 8 hr, etc.)?		X	 X X X	
Did personnel sign in/out of site?	X			
Daily tailgate safety meetings conducted and documented?	X			
Were new activities performed today? Were hazards identified, discussed during the daily safety tailgate, and incorporated into revised APP/SSHP?	X			SHUT down ELECTRIC to work on panel.
New materials brought on site? MSDSs available?		X		
Exclusion (EZ), Contamination Reduction (CRZ), and Support Zones (SZ) delineated and enforced?			X	
General housekeeping measures in place to prevent hazards?	X			
Emergency Planning				
Were there any changes to emergency contact names, telephone numbers, or hospital? If so, were site personnel made aware and was information distributed/reposted.		X		
Adequate safety equipment inventory available?	X			
Fire extinguisher available (monthly inspection of extinguisher will suffice)	X			
Eyewash station(s) functioning and in place (weekly inspection of eye wash station will suffice)?	X			
First aid supplies available (weekly inspection of first aid kit will suffice)?	X			
Communication equipment readily available for emergencies?	X			
Any reported accidents/incidents at this site? If so, were accident reporting procedures followed?		X		
Air Monitoring				
Monitoring equipment specified in SSHP available and in working order? Air monitoring instrumentation for this site includes – check each if required/on site, note deficiencies in comments: • Combustible gas meter • Organic vapor analyzer • Contaminant specific analyzer for benzene (if total organic vapor concentrations exceed 0.5 ppm)			X	
Monitoring equipment calibrated and calibration records			X	

Y = Satisfactory or Yes; N = Unsatisfactory or No, N/A = Not applicable

Rating	Y	N	N/A	Comments/Immediate Corrective Action[1]
available?			X	
Environmental and personnel monitoring performed as specified in SSHP?			X	
PPE				
Proper dermal protection worn by EA and subcontracted employees when handling/ contacting hazardous chemicals or contaminated environmental media?	X			
Required PPE (hard hats, safety boots / shoes, eye protection with side shields, hearing protection) being worn by EA and subcontracted employees?	X			
PPE inspection completed by SSHO?	X			
Drill Rig Operations				
Daily rig inspection completed? Any equipment problems?			X	
Drill rigs/elevated equipment maintaining minimum 10-ft distance from energized (50 kV) overhead power lines?			X	
Investigation-derived Waste (IDW)				
Wastes properly staged, secured, and labeled at end of day?			X	
Additional Comments:				

John Kuyat
Site Safety and Health Officer's Signature

Dec, 21, 2016
Date

[1] If a deficiency is noted that cannot be immediately corrected, the SSHO will monitor the progress in correcting the deficiency and will document following:

- Date the deficiency was identified
- Description of the deficiency
- Name of the person responsible for correcting the deficiency
- Projected date of correction
- Actual date of correction.

Y = Satisfactory or Yes; N = Unsatisfactory or No, N/A = Not applicable

EA ENGINEERING, SCIENCE AND TECHNOLOGY, INC.
SAFETY MEETING REPORT

Date: 12/21/2016	Time: 0700	Duration of meeting: 10 min	Project # 625990M01
Location: KAFB Bldg 19150		Task: Pull WIRE INTO panel, SHUT down	

Type of meeting: _X_ Daily ____ Weekly ____ Monthly ____ Other: _____

Items/Issues discussed:

1. Scope of work (SHUT down panel) MAIN Breaker
2. Lock out TAG out
3. Temp Lighting
4. 100% PPE
5. Housekeeping

Attach minutes of safety meeting if taken.

Safety questions/issues raised:	Actions/Follow-up needed:
1. NONE	
2.	
3.	
4.	
5.	
6.	

Remarks:

Meeting conducted by:

JOHN Kuyate Indeed safety

HEALTH AND SAFETY ACTIVITY REPORT

Site: Bulk fuel Facility Expansion Location: ICAEB Bldg 19150

Weather Cond.: Mild Onsite Hours: From 0700 To 1400

Changes in PPE Levels[1]	Work Operations	Reasons for Change
NO CHANGES		

Site Safety and Health Plan Violations	Corrective Action Specified	Corrective Action Taken[2] (yes/no)
NO Violations		

Observations and Comments:
All observation good

Completed by: John Kuzak Date: Dec 21, 2016
Site Health and Safety Supervisor

[1]Only SSHO may change PPE levels, using only criteria specified in APP/SSHP.
[2]If a deficiency is noted that cannot be immediately corrected, the SSHO will monitor the progress in correcting the deficiency and will document following:

- Date the deficiency was identified
- Description of the deficiency
- Name of the person responsible for correcting the deficiency
- Projected date of correction
- Actual date of correction.

DAILY REPORT

(ATTACH ADDITIONAL SHEETS IF NECESSARY)

CONTRACT NAME:	Kirtland AFB Bulk Fuels Facility Expansion of Dissolved Plume GWTS Design	REPORT NO:	48
CONTRACT NUMBER:	W912DR-12-D-0006	REPORT DATE:	27 DEC 16
REVISION NUMBER:	-	REVISION DATE:	-
TASK ORDER NUMBER:	DM01	PROJECT NAME / LOCATION:	KAFB, ABQ, NM
PROJECT NUMBER:	62599DM01	PROJECT DESCRIPTION:	KAFB GWTS Expansio-
PROJECT MANAGER:	Devon Jercinovic	FIELD QUALITY MANAGER:	Alex Spilk
CONSTRUCTION MANAGER:	Alex Spilk	SITE SAFETY MANAGER:	Alex Spilk

AM WEATHER:	cool, breezy, partly cloudy	PM WEATHER:	Partly cloudy cool, breezy	MAX TEMP (F):	52	

SUMMARY OF WORK PERFORMED TODAY

Install level sensors and float switches in tanks

HEALTH AND SAFETY REPORT

SAFETY ACTIONS TAKEN TODAY/SAFETY INSPECTIONS CONDUCTED (Include Observations, Safety Violations, Corrective Instructions Given, Corrective Actions Taken, and Results of Safety Inspections Conducted:

Visual observations, no issues noted

TAILGATE TOPICS: overhead safety, level D, slips/trips + falls

SAFE BEHAVIOR OBSERVATIONS/SELF-ASSESSMENTS:

Safe behavior observed

OPERATIONS/PRODUCTION REPORT

WORK FORCE – CONTRACTOR AND SUBCONTRACTOR

Company	Cumulative Total of Work Hours From Previous Report	Total Hours Today	Total Work Hours From Start of Injection Event
I+C solutions	70	8	78

EQUIPMENT ON HAND

Description of Equipment	Make/Model/ Manufacturer	Equipment ID Number	Inspection Performed By
~~Ladder~~ Ladder	werner		A Spilk

COMMENTS (acceptance status, inspection findings, etc.):

WORK AND/OR TESTS ACCOMPLISHED OR IN PROGRESS

Performed Work/Test for Today:

None

Planned Work/Test for Tomorrow:

None

Planned Work/Test for Next Week:

Painting

CHANGED CONDITIONS/DELAY/CONFLICTS ENCOUNTERED (List any conflicts with the project [i.e., scope of work and/or drawings], delays to the project attributable to site and weather conditions, etc.

VISITORS AND DISCUSSIONS:

QUALITY CONTROL REPORT

MATERIALS DELIVERED TO JOB SITE

Quantity/Volume/ Weight	Description of Materials Received	Make/Model/ Manufacturer	Material Lot Number	Inspection Performed By
4	Level transmitter	KPSI		ASplh
4	float switches	Flygt ENM-10	5828830-13M	ASplh

COMMENTS (acceptance status, inspection findings, etc.):

INSPECTIONS PERFORMED

Task/Activity Inspected	Inspection Performed	Findings
~~TASTO~~ level transducer	visual inspection	OK

TESTS PERFORMED

Task/Activity Tested	Test Performed	Test Results (Pass/Fail) - Criteria
None		

QUALITY ISSUES AND RESOLUTIONS:

SUBMITTALS INSPECTION / REVIEW

Submittal No.	Submittal Description	Specification/Plan Reference	Submittal Approved?		Comment/Reason/Action
NA	Daily Report	–	Yes ☐	No ☐	Pending
NA	SBO	–	Yes ☐	No ☐	Pending
NA	PTSP	–	Yes ☐	No ☐	Pending

REGULATORY COMPLIANCE REPORT							
PERMIT INSPECTIONS PERFORMED:							
Nom							
WASTE ACCUMULATION/STOCKPILE AREA INSPECTION							
Inspection Performed By:				Signature of Inspector:			
Accumulation / Stockpile Area Inspected:	NA						
No of Bins:		No of Tankers		No of Roll-Off Boxes:		No. of Tanks	
Inspection Results: NA							
GENERAL COMMENTS							
General Comments: (rework, directives, etc.): OK							
ATTACHMENTS							
List of Attachments: (examples, as applicable: submittals, meeting minutes, safety meeting minutes, COCs, weight tickets, manifests, profiles, rework item list, RFIs, DCNs, photographs, etc.): Safety documentation and photo log							
NOTE: Write all entries legibly in ink. Line out all unused portions or designate as "not applicable". Preparer signs first and last name on each completed daily report. This form may be filled out electronically and signed electronically.				Alex Spill PREPARER'S SIGNATURE		27DEC16 DATE	

Location: GWTS Floor
Description: Level Transducer and Float Switch Assembly Prior to Deployment
Date: 27 December 2016 Direction: Down

Location: Newly Installed Influent and Effluent Tanks
Description: Newly Installed and Wired Level Transducers and Float Switches
Date: 27 December 2016 Direction: Northwest

Location: Existing Effluent Tank
Description: Newly Installed Level Transducer and Float Switch
Date: 27 December 2016 Direction: Southwest

Location: Existing Influent Tank
Description: : Newly Installed Level Transducer and Float Switch
Date: 27 December 2016 Direction: Northeast

EA Engineering, Science, and Technology, Inc.

DAILY SAFETY INSPECTION CHECKLIST (TO BE COMPLETED EACH DAY OF CONSTRUCTION OR HTRW SITE ACTIVITIES)

Site: Bulk Fuel Facility Expansion
Location: KAFB BLDG 19150
Project No.: 625990M01
Client: USACE
Prepared by SSHO: Alex Spill
Project Manager: Devon Jercinovic
Date: 27DEC16

Rating	Y	N	N/A	Comments/Immediate Corrective Action[1]
Accident Prevention Plan (APP) and Site Safety and Health Plan (SSHP) General Requirements				
Are there new onsite personnel? • Did they receive pre-entry briefing and are their names recorded in field logbook or daily log? • Was the USACE PM made aware of the new personnel. • Required training and medical surveillance documentation received (e.g., 40-hr, 8 hr, etc.)?		X	X X X	
Did personnel sign in/out of site?	X			
Daily tailgate safety meetings conducted and documented?	X			
Were new activities performed today? Were hazards identified, discussed during the daily safety tailgate, and incorporated into revised APP/SSHP?		X		
New materials brought on site? MSDSs available?		X		
Exclusion (EZ), Contamination Reduction (CRZ), and Support Zones (SZ) delineated and enforced?			X	
General housekeeping measures in place to prevent hazards?	X			
Emergency Planning				
Were there any changes to emergency contact names, telephone numbers, or hospital? If so, were site personnel made aware and was information distributed/reposted.		X		
Adequate safety equipment inventory available?	X			
Fire extinguisher available (monthly inspection of extinguisher will suffice)	X			
Eyewash station(s) functioning and in place (weekly inspection of eye wash station will suffice)?	X			
First aid supplies available (weekly inspection of first aid kit will suffice)?	X			
Communication equipment readily available for emergencies?	X			
Any reported accidents/incidents at this site? If so, were accident reporting procedures followed?		X		
Air Monitoring				
Monitoring equipment specified in SSHP available and in working order? Air monitoring instrumentation for this site includes – check each if required/on site, note deficiencies in comments: • Combustible gas meter • Organic vapor analyzer • Contaminant specific analyzer for benzene (if total organic vapor concentrations exceed 0.5 ppm)			X	
Monitoring equipment calibrated and calibration records			X	

Y = Satisfactory or Yes; N = Unsatisfactory or No, N/A = Not applicable

Rating	Y	N	N/A	Comments/Immediate Corrective Action[1]
available?			X	
Environmental and personnel monitoring performed as specified in SSHP?			X	
PPE				
Proper dermal protection worn by EA and subcontracted employees when handling/ contacting hazardous chemicals or contaminated environmental media?	X			
Required PPE (hard hats, safety boots / shoes, eye protection with side shields, hearing protection) being worn by EA and subcontracted employees?	X			
PPE inspection completed by SSHO?	X			
Drill Rig Operations				
Daily rig inspection completed? Any equipment problems?			X	
Drill rigs/elevated equipment maintaining minimum 10-ft distance from energized (50 kV) overhead power lines?			X	
Investigation-derived Waste (IDW)				
Wastes properly staged, secured, and labeled at end of day?			X	

Additional Comments:

Alex Spill
Site Safety and Health Officer's Signature

27DEC16
Date

[1]If a deficiency is noted that cannot be immediately corrected, the SSHO will monitor the progress in correcting the deficiency and will document following:

- Date the deficiency was identified
- Description of the deficiency
- Name of the person responsible for correcting the deficiency
- Projected date of correction
- Actual date of correction.

Y = Satisfactory or Yes; N = Unsatisfactory or No, N/A = Not applicable

EA ENGINEERING, SCIENCE AND TECHNOLOGY, INC.
SAFETY MEETING REPORT

Date: 27DEC16	Time: 0930	Duration of meeting: 5minuts	Project # 625 49DM04
Location: KAFB GWTS BLDG 19150		Task: install level transducer	

Type of meeting: _X_ Daily ___ Weekly ___ Monthly ___ Other: _____

Items/Issues discussed:

1. slips / trips and falls
2. scope of work
3. aerial work practices / Lanyards
4. PPE
5. Housekeeping

Attach minutes of safety meeting if taken.

Safety questions/issues raised:	Actions/Follow-up needed:
1. None	
2.	
3.	
4.	
5.	
6.	

Remarks:

Meeting conducted by:

Alex Spilka EA

HEALTH AND SAFETY ACTIVITY REPORT

Site: Bulk Fuel Facility Expansion Location: KAFB Bldg 19150

Weather Cond.: Partly Cloudy, Cool breezy Onsite Hours: From 0715 To 1300

Changes in PPE Levels[1]	Work Operations	Reasons for Change
No Change		

Site Safety and Health Plan Violations	Corrective Action Specified	Corrective Action Taken[2] (yes/no)
No violations		

Observations and Comments:

safe work practices observed

Completed by: Alec Zall Date: 27DEC16

Site Health and Safety Supervisor

[1]Only SSHO may change PPE levels, using only criteria specified in APP/SSHP.

[2]If a deficiency is noted that cannot be immediately corrected, the SSHO will monitor the progress in correcting the deficiency and will document following:

- Date the deficiency was identified
- Description of the deficiency
- Name of the person responsible for correcting the deficiency
- Projected date of correction
- Actual date of correction.

DAILY REPORT

(ATTACH ADDITIONAL SHEETS IF NECESSARY)

CONTRACT NAME:	Kirtland AFB Bulk Fuels Facility Expansion of Dissolved Plume GWTS Design	REPORT NO:	49
CONTRACT NUMBER:	W912DR-12-D-0006	REPORT DATE:	03-JAN-17
REVISION NUMBER:	-	REVISION DATE:	-
TASK ORDER NUMBER:	DM01	PROJECT NAME / LOCATION:	KAFB, ABQ, NM
PROJECT NUMBER:	62599DM01	PROJECT DESCRIPTION:	KAFB GWTS Expansio
PROJECT MANAGER:	Devon Jercinovic	FIELD QUALITY MANAGER:	Alex Spink
CONSTRUCTION MANAGER:	Alex Spink	SITE SAFETY MANAGER:	John Ede Baco

AM WEATHER:	Cool, Breezy partly Cloudy	PM WEATHER:	Cool, breezy few clouds	MAX TEMP (F):	49

SUMMARY OF WORK PERFORMED TODAY

Painting

HEALTH AND SAFETY REPORT

SAFETY ACTIONS TAKEN TODAY/SAFETY INSPECTIONS CONDUCTED (Include Observations, Safety Violations, Corrective Instructions Given, Corrective Actions Taken, and Results of Safety Inspections Conducted:

visual observation, no issues noted

TAILGATE TOPICS: PPE, stop work policy, First aid kit, eyewash station, drinking water, MSDs, List training, housekeeping, Idaho safety

SAFE BEHAVIOR OBSERVATIONS/SELF-ASSESSMENTS:

Safe behavior observed

OPERATIONS / PRODUCTION REPORT

WORK FORCE – CONTRACTOR AND SUBCONTRACTOR

Company	Cumulative Total of Work Hours From Previous Report	Total Hours Today	Total Work Hours From Start of Injection Event
Ultra Painting	13	14	27
Techsar	233	8	241

EQUIPMENT ON HAND

Description of Equipment	Make/Model/Manufacturer	Equipment ID Number	Inspection Performed By
Ahern 400s Boom Lift	Ahern 400s	60017	Javier Nagera

NV

COMMENTS (acceptance status, inspection findings, etc.):

WORK AND/OR TESTS ACCOMPLISHED OR IN PROGRESS

Performed Work / Test for Today:

Painting (primer application)

Planned Work / Test for Tomorrow:
Primer application

Planned Work / Test for Next Week:
misc. minor work

CHANGED CONDITIONS/DELAY/CONFLICTS ENCOUNTERED (List any conflicts with the project [i.e., scope of work and/or drawings], delays to the project attributable to site and weather conditions, etc. Boom lift needs hydraulic fluid

VISITORS AND DISCUSSIONS: None

QUALITY CONTROL REPORT

MATERIALS DELIVERED TO JOB SITE

Quantity/Volume/ Weight	Description of Materials Received	Make/Model/Manufacturer	Material Lot Number	Inspection Performed By
2 Gallon	Primer/Sealer white	PPG Gripper 3210-12006	8731619073201	A Spilk
2 Gallon	Paint semi-gloss white	PPG WB Alkyd 6-1510	8728610007011	A Spilk

COMMENTS (acceptance status, inspection findings, etc.):

INSPECTIONS PERFORMED

Task/Activity Inspected	Inspection Performed	Findings
~~Visual inspection~~		
painting	Visual inspection	OK

TESTS PERFORMED

Task/Activity Tested	Test Performed	Test Results (Pass/Fail) - Criteria
None		

QUALITY ISSUES AND RESOLUTIONS:

SUBMITTALS INSPECTION / REVIEW

Submittal No.	Submittal Description	Specification/Plan Reference	Submittal Approved?		Comment/Reason/Action
NA	Daily Report	–	Yes ☐	No ☐	Pending
NA	SBO	–	Yes ☐	No ☐	Pending
NA	PTSP	–	Yes ☐	No ☐	Pending

REGULATORY COMPLIANCE REPORT

PERMIT INSPECTIONS PERFORMED: NA

WASTE ACCUMULATION/STOCKPILE AREA INSPECTION

Inspection Performed By:		Signature of Inspector:	
Accumulation / Stockpile Area Inspected:	NA		

No of Bins:		No of Tankers		No of Roll-Off Boxes:		No. of Tanks	

Inspection Results: NA

GENERAL COMMENTS

General Comments~ (rework, directives, etc.):

None

ATTACHMENTS

List of Attachments: (examples, as applicable: submittals, meeting minutes, safety meeting minutes, COCs, weight tickets, manifests, profiles, rework item list, RFIs, DCNs, photographs, etc.):

Photo log + safety documentation

NOTE: Write all entries legibly in ink. Line out all unused portions or designate as "not applicable". Preparer signs first and last name on each completed daily report. This form may be filled out electronically and signed electronically.

Alex Spill — PREPARER'S SIGNATURE

03JAN16 — DATE

Location: Existing Influent Pump Skid
Description: Primer Applied to Pipe
Date: 03 January 2017 Direction: North

Location: Newly Installed Influent Tank
Description: Primer Applied to Flanges, Valve, and Metal Framing (Unistrut)
Date: 03 January 2017 Direction: Northwest

Location: Newly Installed Effluent Pump Skid
Description: Primer Applied to Metal Framing and Conduit
Date: 03 January 2017 Direction: West

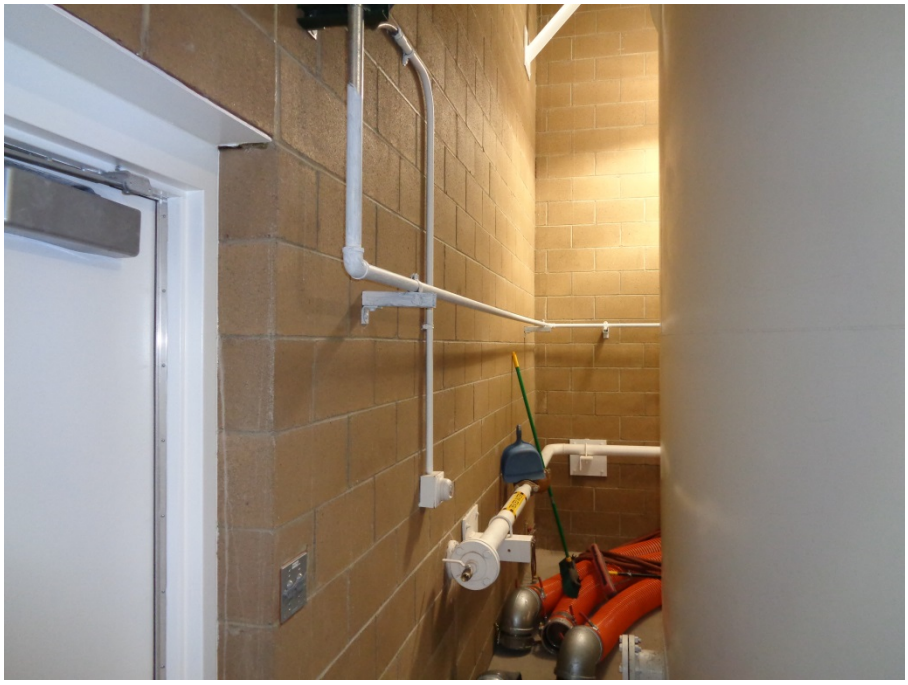

Location: South Wall Behind Existing Effluent Tank
Description: : Primer Applied to Conduit
Date: 03 January 2017 Direction: West

EA Engineering, Science, and Technology, Inc.

DAILY SAFETY INSPECTION CHECKLIST (TO BE COMPLETED EACH DAY OF CONSTRUCTION OR HTRW SITE ACTIVITIES)

Site: BULK FUELS FACILITY EXPANSION
Location: KAFB BLDG 19150
Project No.: 625990M01
Client: US ARMY CORP OF ENGINEERS

Prepared by SSHO: JOHN C DE BACA
Project Manager: DEVON JERCINOVIC
Date: 1/3/17

Rating	Y	N	N/A	Comments/Immediate Corrective Action[1]
Accident Prevention Plan (APP) and Site Safety and Health Plan (SSHP) General Requirements				
Are there new onsite personnel? • Did they receive pre-entry briefing and are their names recorded in field logbook or daily log? • Was the USACE PM made aware of the new personnel. • Required training and medical surveillance documentation received (e.g., 40-hr, 8 hr, etc.)?	X X	X		
Did personnel sign in/out of site?	X			
Daily tailgate safety meetings conducted and documented?	X			
Were new activities performed today? Were hazards identified, discussed during the daily safety tailgate, and incorporated into revised APP/SSHP?	X			
New materials brought on site? MSDSs available?	X			
Exclusion (EZ), Contamination Reduction (CRZ), and Support Zones (SZ) delineated and enforced?			X	
General housekeeping measures in place to prevent hazards?	X			
Emergency Planning				
Were there any changes to emergency contact names, telephone numbers, or hospital? If so, were site personnel made aware and was information distributed/reposted.		X		
Adequate safety equipment inventory available?	X			
Fire extinguisher available (monthly inspection of extinguisher will suffice)	X			
Eyewash station(s) functioning and in place (weekly inspection of eye wash station will suffice)?	X			
First aid supplies available (weekly inspection of first aid kit will suffice)?	X			
Communication equipment readily available for emergencies?	X			
Any reported accidents/incidents at this site? If so, were accident reporting procedures followed?		X		
Air Monitoring				
Monitoring equipment specified in SSHP available and in working order? Air monitoring instrumentation for this site includes – check each if required/on site, note deficiencies in comments: • Combustible gas meter • Organic vapor analyzer • Contaminant specific analyzer for benzene (if total organic vapor concentrations exceed 0.5 ppm)			X	
Monitoring equipment calibrated and calibration records			X	

Y = Satisfactory or Yes; N = Unsatisfactory or No, N/A = Not applicable

EA ENGINEERING, SCIENCE AND TECHNOLOGY, INC.
SAFETY MEETING REPORT

Date: 1/3/17	Time: 0700	Duration of meeting: 10 min	Project # 62599.DM01
Location: KAFB BLDG 19150		Task: PAINTING	

Type of meeting: X Daily ___ Weekly ___ Monthly ___ Other: _____

Items/Issues discussed:

1. PPE
2. STOP WORK POLICY
3. FIRST AID KIT
4. EYE WASH STATION
5. DRINKING WATER
6. MSDS
7. TRAINING (LIFTS)
8. HOUSEKEEPING
9. INSPECTIONS (LIFTS)
10. LADDER USE

Attach minutes of safety meeting if taken.

Safety questions/issues raised:	Actions/Follow-up needed:
1. NONE!!!	
2.	
3.	
4.	
5.	
6.	

Remarks: NO SAFETY VIOLATIONS !!!

Meeting conducted by:

JOHN CDE BACA

HEALTH AND SAFETY ACTIVITY REPORT

Site: BULK FUELS FACILITY EXPANSION Location: KAB BLDG 19150

Weather Cond.: CLOUDY, COOL Onsite Hours: From 0700 To 1500

Changes in PPE Levels[1]	Work Operations	Reasons for Change
NO CHANGES!		

Site Safety and Health Plan Violations	Corrective Action Specified	Corrective Action Taken [2](yes/no)
NONE		

Observations and Comments:

Completed by: JOHN COE BACA
Site Health and Safety Supervisor

Date: 1/9/17

[1]Only SSHO may change PPE levels, using only criteria specified in APP/SSHP.
[2]If a deficiency is noted that cannot be immediately corrected, the SSHO will monitor the progress in correcting the deficiency and will document following:

- Date the deficiency was identified
- Description of the deficiency
- Name of the person responsible for correcting the deficiency
- Projected date of correction
- Actual date of correction.

Rating	Y	N	N/A	Comments/Immediate Corrective Action[1]
available?			X	
Environmental and personnel monitoring performed as specified in SSHP?			X	
PPE				
Proper dermal protection worn by EA and subcontracted employees when handling/ contacting hazardous chemicals or contaminated environmental media?			X	
Required PPE (hard hats, safety boots / shoes, eye protection with side shields, hearing protection) being worn by EA and subcontracted employees?	X			
PPE inspection completed by SSHO?	X			
Drill Rig Operations				
Daily rig inspection completed? Any equipment problems?			X	
Drill rigs/elevated equipment maintaining minimum 10-ft distance from energized (50 kV) overhead power lines?			X	
Investigation-derived Waste (IDW)				
Wastes properly staged, secured, and labeled at end of day?			X	

Additional Comments:

John M. Ochoa
Site Safety and Health Officer's Signature

Date 1/3/17

[1]If a deficiency is noted that cannot be immediately corrected, the SSHO will monitor the progress in correcting the deficiency and will document following:

- Date the deficiency was identified
- Description of the deficiency
- Name of the person responsible for correcting the deficiency
- Projected date of correction
- Actual date of correction.

Y = Satisfactory or Yes; N = Unsatisfactory or No, N/A = Not applicable

DAILY REPORT

(ATTACH ADDITIONAL SHEETS IF NECESSARY)

CONTRACT NAME:	Kirtland AFB Bulk Fuels Facility Expansion of Dissolved Plume GWTS Design	REPORT NO:	50
CONTRACT NUMBER:	W912DR-12-D-0006	REPORT DATE:	4 JAN 17
REVISION NUMBER:	-	REVISION DATE:	-
TASK ORDER NUMBER:	DM01	PROJECT NAME / LOCATION:	KAFB, ABQ, NM
PROJECT NUMBER:	62599DM01	PROJECT DESCRIPTION:	KAFB GWTS EXPANSION
PROJECT MANAGER:	Devon Jercinovic	FIELD QUALITY MANAGER:	Alex Spill
CONSTRUCTION MANAGER:	Alex Spill	SITE SAFETY MANAGER:	John Cde Baca

AM WEATHER:	few clouds, breezy, cold	PM WEATHER:	Lightwind, cold, cloudy	MAX TEMP (F):	54		

SUMMARY OF WORK PERFORMED TODAY

Painting

HEALTH AND SAFETY REPORT

SAFETY ACTIONS TAKEN TODAY/SAFETY INSPECTIONS CONDUCTED (Include Observations, Safety Violations, Corrective Instructions Given, Corrective Actions Taken, and Results of Safety Inspections Conducted: visual observation, no issues noted

TAILGATE TOPICS: Ladder use, lanyard use, ventilation, PPE, lift operation

SAFE BEHAVIOR OBSERVATIONS/SELF-ASSESSMENTS:

Safe behavior observed

OPERATIONS/PRODUCTION REPORT

WORK FORCE – CONTRACTOR AND SUBCONTRACTOR

Company	Cumulative Total of Work Hours From Previous Report	Total Hours Today	Total Work Hours From Start of Injection Event
Ultra Painting	27	16	43
Techsas	241	8	249

EQUIPMENT ON HAND

Description of Equipment	Make/Model/ Manufacturer	Equipment ID Number	Inspection Performed By
Ahern 4005 Boom Lift	Ahern 4005	60117	Javier Najera
Scissor Lift Genie	GS-1930	-	Javier Najera

COMMENTS (acceptance status, inspection findings, etc.):

WORK AND/OR TESTS ACCOMPLISHED OR IN PROGRESS

Performed Work/Test for Today: Painting

Planned Work/Test for Tomorrow: Painting

Planned Work/Test for Next Week: Painting

CHANGED CONDITIONS/DELAY/CONFLICTS ENCOUNTERED (List any conflicts with the project [i.e., scope of work and/or drawings], delays to the project attributable to site and weather conditions, etc. issues with boom lift, repaired

VISITORS AND DISCUSSIONS: Trent Simple (USACE) stilling well

QUALITY CONTROL REPORT

MATERIALS DELIVERED TO JOB SITE

Quantity/Volume/ Weight	Description of Materials Received	Make/Model/ Manufacturer	Material Lot Number	Inspection Performed By
None				

COMMENTS (acceptance status, inspection findings, etc.):

INSPECTIONS PERFORMED

Task/Activity Inspected	Inspection Performed	Findings
Painting	Visual inspection	OK

TESTS PERFORMED

Task/Activity Tested	Test Performed	Test Results (Pass/Fail) - Criteria
None		

QUALITY ISSUES AND RESOLUTIONS:

SUBMITTALS INSPECTION / REVIEW

Submittal No.	Submittal Description	Specification/Plan Reference	Submittal Approved?		Comment/Reason/Action
No.	Daily Report	–	Yes ☐	No ☐	Pending
No	SBO	–	Yes ☐	No ☐	Pending
No	PTSP	–	Yes ☐	No ☐	Pending

REGULATORY COMPLIANCE REPORT							
PERMIT INSPECTIONS PERFORMED:	None						
WASTE ACCUMULATION/STOCKPILE AREA INSPECTION							
Inspection Performed By:	NA		Signature of Inspector:				
Accumulation / Stockpile Area Inspected:							
No of Bins:		No of Tankers		No of Roll-Off Boxes:		No. of Tanks	
Inspection Results: NA							
GENERAL COMMENTS							
General Comments: (rework, directives, etc.):							
ATTACHMENTS							
List of Attachments: (examples, as applicable: submittals, meeting minutes, safety meeting minutes, COCs, weight tickets, manifests, profiles, rework item list, RFIs, DCNs, photographs, etc.): Photo log and Safety documentation							
NOTE: Write all entries legibly in ink. Line out all unused portions or designate as "not applicable". Preparer signs first and last name on each completed daily report. This form may be filled out electronically and signed electronically.							

Alex Spill — PREPARER'S SIGNATURE

04/5/17 — DATE

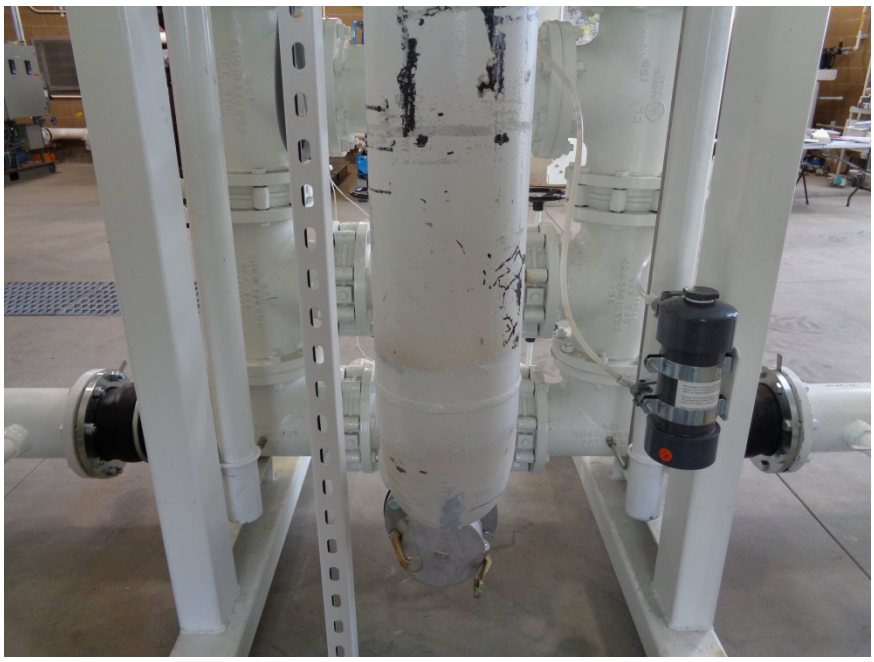

Location: New Granular Activated Carbon (GAC) Vessel Manifold
Description: Primer Applied to Pipe Weld
Date: 04 January 2017 Direction: North

Location: Existing Influent Pump Skid
Description: Primer Applied to Blank Pipe and Flanges
Date: 04 January 2017 Direction: Northeast

Location: Existing Effluent Pump Skid
Description: Primer Applied to Metal Framing, Blank Pipe, and Flanges
Date: 04 January 2017 Direction: Southwest

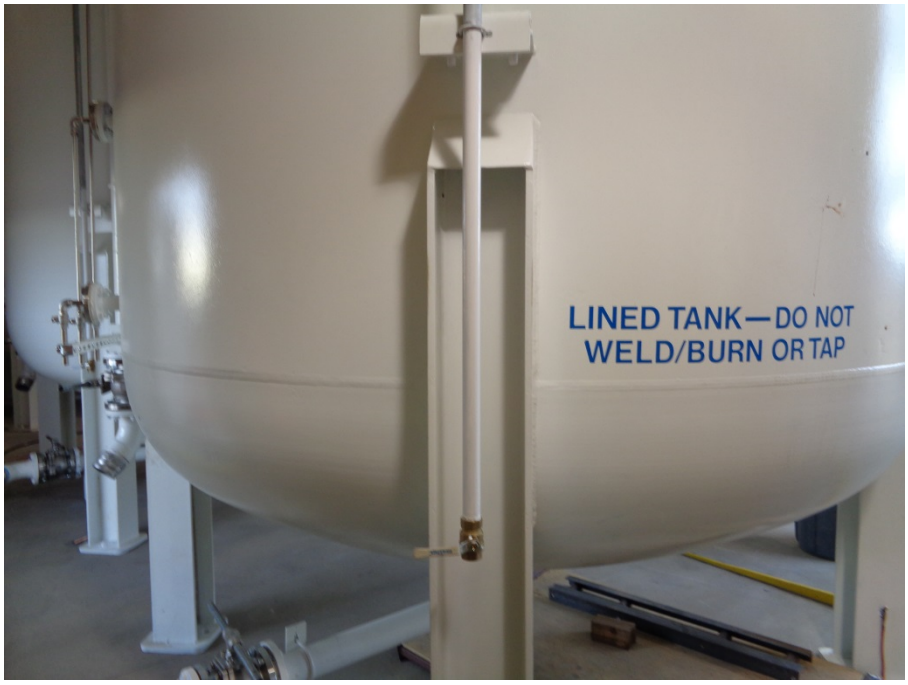

Location: Newly Installed GAC Tanks
Description: : Primer Applied to Pipes
Date: 04 January 2017 Direction: Northwest

EA Engineering, Science, and Technology, Inc.

DAILY SAFETY INSPECTION CHECKLIST (TO BE COMPLETED EACH DAY OF CONSTRUCTION OR HTRW SITE ACTIVITIES)

Site: BULK FUELS FACILITY EX
Location: KAFB BLDG 19150
Project No.: 627599 DM01
Client: US ARMY CORP OF ENGINEERS

Prepared by SSHO: JOHN CODE BACA
Project Manager: DEVON JERCINOVIC
Date: 1-4-17

Rating	Y	N	N/A	Comments/Immediate Corrective Action[1]
Accident Prevention Plan (APP) and Site Safety and Health Plan (SSHP) General Requirements				
Are there new onsite personnel? • Did they receive pre-entry briefing and are their names recorded in field logbook or daily log? • Was the USACE PM made aware of the new personnel. • Required training and medical surveillance documentation received (e.g., 40-hr, 8 hr, etc.)?		X	X X X	
Did personnel sign in/out of site?	X			
Daily tailgate safety meetings conducted and documented?	X			
Were new activities performed today? Were hazards identified, discussed during the daily safety tailgate, and incorporated into revised APP/SSHP?		X		
New materials brought on site? MSDSs available?		X		
Exclusion (EZ), Contamination Reduction (CRZ), and Support Zones (SZ) delineated and enforced?			X	
General housekeeping measures in place to prevent hazards?	X			
Emergency Planning				
Were there any changes to emergency contact names, telephone numbers, or hospital? If so, were site personnel made aware and was information distributed/reposted.		X		
Adequate safety equipment inventory available?	X			
Fire extinguisher available (monthly inspection of extinguisher will suffice)	X			
Eyewash station(s) functioning and in place (weekly inspection of eye wash station will suffice)?	X			
First aid supplies available (weekly inspection of first aid kit will suffice)?	X			
Communication equipment readily available for emergencies?	X			
Any reported accidents/incidents at this site? If so, were accident reporting procedures followed?			X	
Air Monitoring				
Monitoring equipment specified in SSHP available and in working order? Air monitoring instrumentation for this site includes – check each if required/on site, note deficiencies in comments: • Combustible gas meter • Organic vapor analyzer • Contaminant specific analyzer for benzene (if total organic vapor concentrations exceed 0.5 ppm)			X	
Monitoring equipment calibrated and calibration records			X	

Y = Satisfactory or Yes; N = Unsatisfactory or No, N/A = Not applicable

Rating	Y	N	N/A	Comments/Immediate Corrective Action[1]
available?			X	
Environmental and personnel monitoring performed as specified in SSHP?			X	
PPE				
Proper dermal protection worn by EA and subcontracted employees when handling/ contacting hazardous chemicals or contaminated environmental media?			X	
Required PPE (hard hats, safety boots / shoes, eye protection with side shields, hearing protection) being worn by EA and subcontracted employees?	X			
PPE inspection completed by SSHO?	X			
Drill Rig Operations				
Daily rig inspection completed? Any equipment problems?			X	
Drill rigs/elevated equipment maintaining minimum 10-ft distance from energized (50 kV) overhead power lines?			X	
Investigation-derived Waste (IDW)				
Wastes properly staged, secured, and labeled at end of day?			X	

Additional Comments:

John M. Cobra
Site Safety and Health Officer's Signature

1/4/17
Date

[1]If a deficiency is noted that cannot be immediately corrected, the SSHO will monitor the progress in correcting the deficiency and will document following:

- Date the deficiency was identified
- Description of the deficiency
- Name of the person responsible for correcting the deficiency
- Projected date of correction
- Actual date of correction.

Y = Satisfactory or Yes; N = Unsatisfactory or No, N/A = Not applicable

EA ENGINEERING, SCIENCE AND TECHNOLOGY, INC.
SAFETY MEETING REPORT

Date: 1/4/17	Time: 0700	Duration of meeting: 10 min	Project # 625990 MO
Location: KAFB B2DG 19150		Task: PAINTING	

Type of meeting: X Daily ___ Weekly ___ Monthly ___ Other: _____

Items/Issues discussed:

1. Ladder Use
2. Lanyards & tie off in lifts
3. VENTILATION WHILE USING BOOM LIFT
4. PPE
5. SAFE OPERATION OF LIFT

Attach minutes of safety meeting if taken.

Safety questions/issues raised:	Actions/Follow-up needed:
1. NONE!!!	
2.	
3.	
4.	
5.	
6.	

Remarks: BOOM LIFT WAS NOT OPERATING PROPERLY RENTAL COMPANY CALLED OUT TO REPAIR

Meeting conducted by: JOHN COE BACA

HEALTH AND SAFETY ACTIVITY REPORT

Site: BULK FUELS FACILITY EXPANSION Location: AAFB Bldg 19150

Weather Cond.: PARTLY CLOUDY, COOL Onsite Hours: From 0700 To 1530

Changes in PPE Levels[1]	Work Operations	Reasons for Change
NO CHANGES!!!		

Site Safety and Health Plan Violations	Corrective Action Specified	Corrective Action Taken[2] (yes/no)
NO SAFETY VIOLATIONS!!!		

Observations and Comments:
NONE!!!

Completed by: JOHN C DE BACA Date: 1/4/17
Site Health and Safety Supervisor

[1]Only SSHO may change PPE levels, using only criteria specified in APP/SSHP.
[2]If a deficiency is noted that cannot be immediately corrected, the SSHO will monitor the progress in correcting the deficiency and will document following:

- Date the deficiency was identified
- Description of the deficiency
- Name of the person responsible for correcting the deficiency
- Projected date of correction
- Actual date of correction.

DAILY REPORT

(ATTACH ADDITIONAL SHEETS IF NECESSARY)

CONTRACT NAME:	Kirtland AFB Bulk Fuels Facility Expansion of Dissolved Plume GWTS Design	REPORT NO:	51
CONTRACT NUMBER:	W912DR-12-D-0006	REPORT DATE:	5JAN17
REVISION NUMBER:	-	REVISION DATE:	-
TASK ORDER NUMBER:	DM01	PROJECT NAME / LOCATION:	KAFB, ABQ, NM
PROJECT NUMBER:	62599DM01	PROJECT DESCRIPTION:	KAFB GWTS Expansion
PROJECT MANAGER:	Devon Jercinovic	FIELD QUALITY MANAGER:	Alex Spill
CONSTRUCTION MANAGER:	Alex Spill	SITE SAFETY MANAGER:	John ede Baca

AM WEATHER:	Cold, light cloudy, wind	PM WEATHER:	cloudy, cold light wind	MAX TEMP (F):	55		

SUMMARY OF WORK PERFORMED TODAY

Painting

HEALTH AND SAFETY REPORT

SAFETY ACTIONS TAKEN TODAY/SAFETY INSPECTIONS CONDUCTED (Include Observations, Safety Violations, Corrective Instructions Given, Corrective Actions Taken, and Results of Safety Inspections Conducted:

Visual observation, no issues

TAILGATE TOPICS: Ladder use, lanyard use, ventilation, PPE, Lift Operation (Ramp use)

SAFE BEHAVIOR OBSERVATIONS/SELF-ASSESSMENTS:

Safe behavior observed

OPERATIONS/PRODUCTION REPORT

WORK FORCE – CONTRACTOR AND SUBCONTRACTOR

Company	Cumulative Total of Work Hours From Previous Report	Total Hours Today	Total Work Hours From Start of Injection Event
Ultra Painting	43	16	59
Tech Air	249	8	257
Rupert	540	2	542

EQUIPMENT ON HAND

Description of Equipment	Make/Model/ Manufacturer	Equipment ID Number	Inspection Performed By
Boom Lift	Ahern 400S	60117	Javier Najera
Scissor lift	Genie GS-1930	-	Javier Najera

COMMENTS (acceptance status, inspection findings, etc.):

WORK AND/OR TESTS ACCOMPLISHED OR IN PROGRESS

Performed Work/Test for Today: Painting

Planned Work/Test for Tomorrow: Painting

Planned Work/Test for Next Week: Painting

CHANGED CONDITIONS/DELAY/CONFLICTS ENCOUNTERED (List any conflicts with the project [i.e., scope of work and/or drawings], delays to the project attributable to site and weather conditions, etc.

VISITORS AND DISCUSSIONS: Trent Simpler (USACE) still well, Lockout on CACs

QUALITY CONTROL REPORT

MATERIALS DELIVERED TO JOB SITE

Quantity/Volume/ Weight	Description of Materials Received	Make/Model/ Manufacturer	Material Lot Number	Inspection Performed By
None				

COMMENTS (acceptance status, inspection findings, etc.):

INSPECTIONS PERFORMED

Task/Activity Inspected	Inspection Performed	Findings
Paint	Visual inspection	OK

TESTS PERFORMED

Task/Activity Tested	Test Performed	Test Results (Pass/Fail) - Criteria
None		

QUALITY ISSUES AND RESOLUTIONS: New influent tank 5 hinges leaked. Bolts tightened issue resolved

SUBMITTALS INSPECTION / REVIEW

Submittal No.	Submittal Description	Specification/Plan Reference	Submittal Approved?		Comment/Reason/Action
NA	Daily Report	–	Yes ☐	No ☐	Pending
NA	SBO	–	Yes ☐	No ☐	Pending
NA	PTSP	–	Yes ☐	No ☐	Pending

REGULATORY COMPLIANCE REPORT							
PERMIT INSPECTIONS PERFORMED:	None						
WASTE ACCUMULATION/STOCKPILE AREA INSPECTION							
Inspection Performed By:	NB		Signature of Inspector:				
Accumulation / Stockpile Area Inspected:							
No of Bins:		No of Tankers		No of Roll-Off Boxes:		No. of Tanks	
Inspection Results:	NB						
GENERAL COMMENTS							
General Comments: (rework, directives, etc.):							
ATTACHMENTS							
List of Attachments: (examples, as applicable: submittals, meeting minutes, safety meeting minutes, COCs, weight tickets, manifests, profiles, rework item list, RFIs, DCNs, photographs, etc.):	Photolog + safety documentation						
NOTE: Write all entries legibly in ink. Line out all unused portions or designate as "not applicable". Preparer signs first and last name on each completed daily report. This form may be filled out electronically and signed electronically.	AtoSpill — PREPARER'S SIGNATURE			05JAN17 — DATE			

Location: New Granular Activated Carbon (GAC) Vessel Manifold
Description: Primed and Painted Pipes
Date: 05 January 2017 Direction: West

Location: Existing Influent Pump Skid
Description: Painted Pipe and Flanges
Date: 05 January 2017 Direction: North

Location: New Effluent Pump Skid
Description: Primed and Painted Metal Framing, Pipe, and Flanges
Date: 05 January 2017 Direction: Northwest

Location: Near Center of Building
Description: : Overview
Date: 05 January 2017 Direction: West

EA Engineering, Science, and Technology, Inc.

DAILY SAFETY INSPECTION CHECKLIST (TO BE COMPLETED EACH DAY OF CONSTRUCTION OR HTRW SITE ACTIVITIES)

Site: Bulk Fuels Facility Expansion
Location: KAFB Bldg 1950
Project No.: 62599DM01
Client: US Army Corps of Engineers

Prepared by SSHO: John C De Baca
Project Manager: Deidon Jerconovic
Date: 1/5/17

Rating	Y	N	N/A	Comments/Immediate Corrective Action[1]
Accident Prevention Plan (APP) and Site Safety and Health Plan (SSHP) General Requirements				
Are there new onsite personnel? • Did they receive pre-entry briefing and are their names recorded in field logbook or daily log? • Was the USACE PM made aware of the new personnel. • Required training and medical surveillance documentation received (e.g., 40-hr, 8 hr, etc.)?		X	X X X	
Did personnel sign in/out of site?	X			
Daily tailgate safety meetings conducted and documented?	X			
Were new activities performed today? Were hazards identified, discussed during the daily safety tailgate, and incorporated into revised APP/SSHP?		X		
New materials brought on site? MSDSs available?		X		
Exclusion (EZ), Contamination Reduction (CRZ), and Support Zones (SZ) delineated and enforced?			X	
General housekeeping measures in place to prevent hazards?	X			
Emergency Planning				
Were there any changes to emergency contact names, telephone numbers, or hospital? If so, were site personnel made aware and was information distributed/reposted.		X		
Adequate safety equipment inventory available?	X			
Fire extinguisher available (monthly inspection of extinguisher will suffice)	X			
Eyewash station(s) functioning and in place (weekly inspection of eye wash station will suffice)?	X			
First aid supplies available (weekly inspection of first aid kit will suffice)?	X			
Communication equipment readily available for emergencies?	X			
Any reported accidents/incidents at this site? If so, were accident reporting procedures followed?			X	
Air Monitoring				
Monitoring equipment specified in SSHP available and in working order? Air monitoring instrumentation for this site includes – check each if required/on site, note deficiencies in comments: • Combustible gas meter • Organic vapor analyzer • Contaminant specific analyzer for benzene (if total organic vapor concentrations exceed 0.5 ppm)			X	
Monitoring equipment calibrated and calibration records			X	

Y = Satisfactory or Yes; N = Unsatisfactory or No, N/A = Not applicable

Rating	Y	N	N/A	Comments/Immediate Corrective Action[1]
available?			X	
Environmental and personnel monitoring performed as specified in SSHP?			X	
PPE				
Proper dermal protection worn by EA and subcontracted employees when handling/ contacting hazardous chemicals or contaminated environmental media?			X	
Required PPE (hard hats, safety boots / shoes, eye protection with side shields, hearing protection) being worn by EA and subcontracted employees?	X			
PPE inspection completed by SSHO?	X			
Drill Rig Operations				
Daily rig inspection completed? Any equipment problems?			X	
Drill rigs/elevated equipment maintaining minimum 10-ft distance from energized (50 kV) overhead power lines?			X	
Investigation-derived Waste (IDW)				
Wastes properly staged, secured, and labeled at end of day?			X	

Additional Comments:

John M. Collazo

Site Safety and Health Officer's Signature

1/5/17

Date

[1] If a deficiency is noted that cannot be immediately corrected, the SSHO will monitor the progress in correcting the deficiency and will document following:

- Date the deficiency was identified
- Description of the deficiency
- Name of the person responsible for correcting the deficiency
- Projected date of correction
- Actual date of correction.

Y = Satisfactory or Yes; N = Unsatisfactory or No, N/A = Not applicable

EA ENGINEERING, SCIENCE AND TECHNOLOGY, INC.
SAFETY MEETING REPORT

Date: 1/5/17	Time: 0700	Duration of meeting: 10min	Project # 62599.0001
Location: KAFB BLDG 19150		Task: PAINTING	

Type of meeting: X Daily ___ Weekly ___ Monthly ___ Other: _____

Items/Issues discussed:

1. LADDER USE 6. USE OF RAMP
2. TIE OFF IN LIFTS
3. VENTILATION DURING USE OF BOOM LIFT
4. PPE
5. SAFE OPERATION OF LIFT

Attach minutes of safety meeting if taken.

Safety questions/issues raised:	Actions/Follow-up needed:
1. NONE!!!	
2.	
3.	
4.	
5.	
6.	

Remarks:

Meeting conducted by:
JOHN CODE BACA

HEALTH AND SAFETY ACTIVITY REPORT

Site: BULK FUELS FACILITY EXPANSION Location: KAFB BLDG 19150

Weather Cond.: CLOUDY COOL Onsite Hours: From 0700 To 1530

Changes in PPE Levels[1]	Work Operations	Reasons for Change
No Changes!!!		

Site Safety and Health Plan Violations	Corrective Action Specified	Corrective Action Taken [2](yes/no)
NONE!!!		

Observations and Comments:

Completed by: JOHN CODE BACA Date: 1/5/17
Site Health and Safety Supervisor

[1]Only SSHO may change PPE levels, using only criteria specified in APP/SSHP.
[2]If a deficiency is noted that cannot be immediately corrected, the SSHO will monitor the progress in correcting the deficiency and will document following:

- Date the deficiency was identified
- Description of the deficiency
- Name of the person responsible for correcting the deficiency
- Projected date of correction
- Actual date of correction.

DAILY REPORT

(ATTACH ADDITIONAL SHEETS IF NECESSARY)

CONTRACT NAME:	Kirtland AFB Bulk Fuels Facility Expansion of Dissolved Plume GWTS Design	REPORT NO:	52
CONTRACT NUMBER:	W912DR-12-D-0006	REPORT DATE:	6 JAN 17
REVISION NUMBER:	-	REVISION DATE:	-
TASK ORDER NUMBER:	DM01	PROJECT NAME / LOCATION:	KAFB, ABQ, NM
PROJECT NUMBER:	62599DM01	PROJECT DESCRIPTION:	KAFB GWTS Expansion -
PROJECT MANAGER:	Devon Jercinovic	FIELD QUALITY MANAGER:	Alex Spill
CONSTRUCTION MANAGER:	Alex Spill	SITE SAFETY MANAGER:	John Cdd Baco

AM WEATHER:	Mostly Cloudy, flurries, breeze	PM WEATHER:	Cold, clear breezey	MAX TEMP (F):	32°		

SUMMARY OF WORK PERFORMED TODAY

ARV installation ~~and painting~~ AA

HEALTH AND SAFETY REPORT

SAFETY ACTIONS TAKEN TODAY/SAFETY INSPECTIONS CONDUCTED (Include Observations, Safety Violations, Corrective Instructions Given, Corrective Actions Taken, and Results of Safety Inspections Conducted:

Visual observation, no issues

TAILGATE TOPICS: housekeeping, PPE, list safety, lanyard use, overhead hazards

SAFE BEHAVIOR OBSERVATIONS/SELF-ASSESSMENTS:

safe behavior observed

OPERATIONS/PRODUCTION REPORT

WORK FORCE – CONTRACTOR AND SUBCONTRACTOR

Company	Cumulative Total of Work Hours From Previous Report	Total Hours Today	Total Work Hours From Start of Injection Event
Techsas	257	4	261
Rupert	542	4	546

EQUIPMENT ON HAND

Description of Equipment	Make/Model/ Manufacturer	Equipment ID Number	Inspection Performed By
Scissor list	Genie GS-1930	~~6617~~ AA	~~Fayiz Najeeb~~ AA Andres Pomas

COMMENTS (acceptance status, inspection findings, etc.):

WORK AND/OR TESTS ACCOMPLISHED OR IN PROGRESS

Performed Work/Test for Today: 1 ARV was installed

Planned Work/Test for Tomorrow: Non

Planned Work/Test for Next Week: Painting

CHANGED CONDITIONS/DELAY/CONFLICTS ENCOUNTERED (List any conflicts with the project [i.e., scope of work and/or drawings], delays to the project attributable to site and weather conditions, etc. Painters no Show

VISITORS AND DISCUSSIONS: Non

QUALITY CONTROL REPORT

MATERIALS DELIVERED TO JOB SITE

Quantity/Volume/ Weight	Description of Materials Received	Make/Model/ Manufacturer	Material Lot Number	Inspection Performed By
Non				

COMMENTS (acceptance status, inspection findings, etc.):

INSPECTIONS PERFORMED

Task/Activity Inspected	Inspection Performed	Findings
~~Non~~		
ARV installation	visual observation	OK

TESTS PERFORMED

Task/Activity Tested	Test Performed	Test Results (Pass/Fail) - Criteria
Non		

QUALITY ISSUES AND RESOLUTIONS:

SUBMITTALS INSPECTION / REVIEW

Submittal No.	Submittal Description	Specification/Plan Reference	Submittal Approved?		Comment/Reason/Action
NA	Daily Report	–	Yes ☐	No ☐	Pending
NA	SBO	–	Yes ☐	No ☐	Pending
NA	PTSP	–	Yes ☐	No ☐	Pending

REGULATORY COMPLIANCE REPORT							
PERMIT INSPECTIONS PERFORMED:			No~				
WASTE ACCUMULATION/STOCKPILE AREA INSPECTION							
Inspection Performed By:			NP	Signature of Inspector:			
Accumulation / Stockpile Area Inspected:							
No of Bins:		No of Tankers		No of Roll-Off Boxes:		No. of Tanks	
Inspection Results: NP							
GENERAL COMMENTS							
General Comments: (rework, directives, etc.): All OK							
ATTACHMENTS							
List of Attachments: (examples, as applicable: submittals, meeting minutes, safety meeting minutes, COCs, weight tickets, manifests, profiles, rework item list, RFIs, DCNs, photographs, etc.): Photo log and safety documentation~							
NOTE: Write all entries legibly in ink. Line out all unused portions or designate as "not applicable". Preparer signs first and last name on each completed daily report. This form may be filled out electronically and signed electronically.			Alec Spill PREPARER'S SIGNATURE			6 JAN 17 DATE	

Location: Above New Granular Activated Carbon (GAC) Vessels
Description: Newly Installed Air Release Valve
Date: 06 January 2017 Direction: Up

EA Engineering, Science, and Technology, Inc.

DAILY SAFETY INSPECTION CHECKLIST (TO BE COMPLETED EACH DAY OF CONSTRUCTION OR HTRW SITE ACTIVITIES)

Site: BULK FUELS FACILITY EXPANSION
Location: KAFB BLDG 19150
Project No.: 62599DM01
Client: U.S. ARMY CORP OF ENGINEERS
Prepared by SSHO: John Code Baca
Project Manager: Dragan Jerkinovic
Date: 1/4/17

Rating	Y	N	N/A	Comments/Immediate Corrective Action[1]
Accident Prevention Plan (APP) and Site Safety and Health Plan (SSHP) General Requirements				
Are there new onsite personnel? • Did they receive pre-entry briefing and are their names recorded in field logbook or daily log? • Was the USACE PM made aware of the new personnel. • Required training and medical surveillance documentation received (e.g., 40-hr, 8 hr, etc.)?		X	X X X	
Did personnel sign in/out of site?	X			
Daily tailgate safety meetings conducted and documented?	X			
Were new activities performed today? Were hazards identified, discussed during the daily safety tailgate, and incorporated into revised APP/SSHP?		X		
New materials brought on site? MSDSs available?		X		
Exclusion (EZ), Contamination Reduction (CRZ), and Support Zones (SZ) delineated and enforced?			X	
General housekeeping measures in place to prevent hazards?	X			
Emergency Planning				
Were there any changes to emergency contact names, telephone numbers, or hospital? If so, were site personnel made aware and was information distributed/reposted.		X		
Adequate safety equipment inventory available?	X			
Fire extinguisher available (monthly inspection of extinguisher will suffice)	X			
Eyewash station(s) functioning and in place (weekly inspection of eye wash station will suffice)?	X			
First aid supplies available (weekly inspection of first aid kit will suffice)?	X			
Communication equipment readily available for emergencies?	X			
Any reported accidents/incidents at this site? If so, were accident reporting procedures followed?		X		
Air Monitoring				
Monitoring equipment specified in SSHP available and in working order? Air monitoring instrumentation for this site includes – check each if required/on site, note deficiencies in comments: • Combustible gas meter • Organic vapor analyzer • Contaminant specific analyzer for benzene (if total organic vapor concentrations exceed 0.5 ppm)			X	
Monitoring equipment calibrated and calibration records			X	

Y = Satisfactory or Yes; N = Unsatisfactory or No, N/A = Not applicable

Rating	Y	N	N/A	Comments/Immediate Corrective Action[1]
available?			X	
Environmental and personnel monitoring performed as specified in SSHP?			X	
PPE				
Proper dermal protection worn by EA and subcontracted employees when handling/ contacting hazardous chemicals or contaminated environmental media?			X	
Required PPE (hard hats, safety boots / shoes, eye protection with side shields, hearing protection) being worn by EA and subcontracted employees?	X			
PPE inspection completed by SSHO?	X			
Drill Rig Operations				
Daily rig inspection completed? Any equipment problems?			X	
Drill rigs/elevated equipment maintaining minimum 10-ft distance from energized (50 kV) overhead power lines?			X	
Investigation-derived Waste (IDW)				
Wastes properly staged, secured, and labeled at end of day?			X	
Additional Comments:				

John M. DeBacca

Site Safety and Health Officer's Signature

Date 1/6/17

[1] If a deficiency is noted that cannot be immediately corrected, the SSHO will monitor the progress in correcting the deficiency and will document following:

- Date the deficiency was identified
- Description of the deficiency
- Name of the person responsible for correcting the deficiency
- Projected date of correction
- Actual date of correction.

Y = Satisfactory or Yes; N = Unsatisfactory or No, N/A = Not applicable

EA ENGINEERING, SCIENCE AND TECHNOLOGY, INC.
SAFETY MEETING REPORT

Date: 1/6/17	Time: 0700	Duration of meeting: 10min	Project # 62549.0101
Location: KAFB BLDG 19150		Task: INSTALLING ARV	

Type of meeting: X Daily ___ Weekly ___ Monthly ___ Other: _____

Items/Issues discussed:

1. PPE
2. LIFT INSPECTION
3. TIEOFF IN LIFT
4. HAND TOOL SAFETY
5.

Attach minutes of safety meeting if taken.

Safety questions/issues raised:	Actions/Follow-up needed:
1. NONE	
2.	
3.	
4.	
5.	
6.	

Remarks:

Meeting conducted by:

JOHN COE BACA

HEALTH AND SAFETY ACTIVITY REPORT

Site: BULK FUELS FACILITY EXPANSION Location: KAFB BLDG 19150

Weather Cond.: CLEAR Onsite Hours: From 0700 To 1700

Changes in PPE Levels[1]	Work Operations	Reasons for Change
NONE		

Site Safety and Health Plan Violations	Corrective Action Specified	Corrective Action Taken [2](yes/no)
NONE		

Observations and Comments:

Completed by: JOHN CODE BACA Date: 1/6/17
Site Health and Safety Supervisor

[1]Only SSHO may change PPE levels, using only criteria specified in APP/SSHP.
[2]If a deficiency is noted that cannot be immediately corrected, the SSHO will monitor the progress in correcting the deficiency and will document following:

- Date the deficiency was identified
- Description of the deficiency
- Name of the person responsible for correcting the deficiency
- Projected date of correction
- Actual date of correction.

DAILY REPORT

(ATTACH ADDITIONAL SHEETS IF NECESSARY)

CONTRACT NAME:	Kirtland AFB Bulk Fuels Facility Expansion of Dissolved Plume GWTS Design	REPORT NO:	53
CONTRACT NUMBER:	W912DR-12-D-0006	REPORT DATE:	9 JAN 17
REVISION NUMBER:	-	REVISION DATE:	-
TASK ORDER NUMBER:	DM01	PROJECT NAME / LOCATION:	KAFB, ABQ, NM
PROJECT NUMBER:	62599DM01	PROJECT DESCRIPTION:	KAFB GWTS Expansion
PROJECT MANAGER:	Devon Jercinovic	FIELD QUALITY MANAGER:	Kevin McKenzie
CONSTRUCTION MANAGER:		SITE SAFETY MANAGER:	John Cde Baca

AM WEATHER:	cloudy cool	PM WEATHER:	cool, cloudy	MAX TEMP (F):	52°		

SUMMARY OF WORK PERFORMED TODAY

Installed new HMI display, effluent line pressure transmitters, and painted

HEALTH AND SAFETY REPORT

SAFETY ACTIONS TAKEN TODAY/SAFETY INSPECTIONS CONDUCTED (Include Observations, Safety Violations, Corrective Instructions Given, Corrective Actions Taken, and Results of Safety Inspections Conducted:

Visual observation, no issues

TAILGATE TOPICS:

Hand tool safety, PPE, Lift safety and inspection, hearing protection

SAFE BEHAVIOR OBSERVATIONS/SELF-ASSESSMENTS:

safe behavior observed

OPERATIONS/PRODUCTION REPORT

WORK FORCE – CONTRACTOR AND SUBCONTRACTOR

Company	Cumulative Total of Work Hours From Previous Report	Total Hours Today	Total Work Hours From Start of Injection Event
Techsgas	261	13	274
Ultra Painting	59	16	75
I+C Solutions	78	12	90

EQUIPMENT ON HAND

Description of Equipment	Make/Model/ Manufacturer	Equipment ID Number	Inspection Performed By
Manlift	Genie GS-1930	#1	Javier Najera

COMMENTS (acceptance status, inspection findings, etc.):

WORK AND/OR TESTS ACCOMPLISHED OR IN PROGRESS

Performed Work/Test for Today:

Installed H/MI display, pressure transmitters, and painted

Planned Work/Test for Tomorrow:

Continue painting

Planned Work/Test for Next Week:

CHANGED CONDITIONS/DELAY/CONFLICTS ENCOUNTERED (List any conflicts with the project [i.e., scope of work and/or drawings], delays to the project attributable to site and weather conditions, etc. None

VISITORS AND DISCUSSIONS: T. Simpler + D. Agnew tour and EEA + Smith Engineering sitewalk/Meeting with USACE.

QUALITY CONTROL REPORT

MATERIALS DELIVERED TO JOB SITE

Quantity/Volume/ Weight	Description of Materials Received	Make/Model/ Manufacturer	Material Lot Number	Inspection Performed By
None				

COMMENTS (acceptance status, inspection findings, etc.):

INSPECTIONS PERFORMED

Task/Activity Inspected	Inspection Performed	Findings
HMI Display + Pressure transmitter installation	Visual Inspection	OK
Painting	Visual Inspection	OK

TESTS PERFORMED

Task/Activity Tested	Test Performed	Test Results (Pass/Fail) - Criteria
None		

QUALITY ISSUES AND RESOLUTIONS:

SUBMITTALS INSPECTION / REVIEW

Submittal No.	Submittal Description	Specification/Plan Reference	Submittal Approved?		Comment/Reason/Action
NA	Daily Report	–	Yes ☐	No ☐	Pending
NA	SBO	–	Yes ☐	No ☐	Pending
NA	PTSP	–	Yes ☐	No ☐	Pending

REGULATORY COMPLIANCE REPORT							
PERMIT INSPECTIONS PERFORMED: None							
WASTE ACCUMULATION/STOCKPILE AREA INSPECTION							
Inspection Performed By:	NA			Signature of Inspector:			
Accumulation / Stockpile Area Inspected:							
No of Bins:		No of Tankers		No of Roll-Off Boxes:		No. of Tanks	
Inspection Results: NA							
GENERAL COMMENTS							
General Comments: (rework, directives, etc.): All OK							
ATTACHMENTS							
List of Attachments: (examples, as applicable: submittals, meeting minutes, safety meeting minutes, COCs, weight tickets, manifests, profiles, rework item list, RFIs, DCNs, photographs, etc.): Photo log + safety documentation							
NOTE: Write all entries legibly in ink. Line out all unused portions or designate as "not applicable". Preparer signs first and last name on each completed daily report. This form may be filled out electronically and signed electronically.				PREPARER'S SIGNATURE		DATE: 9 JAN 17	

Location: Control Room
Description: Newly Installed HMI Display
Date: 09 January 2017 Direction: South

Location: West Wall Between Effluent Skids
Description: Newly Installed Pressure Transmitters
Date: 09 January 2017 Direction: West

Location: Above Newly Installed GAC Vessels
Description: Primed Conduit
Date: 09 January 2017 Direction: Up

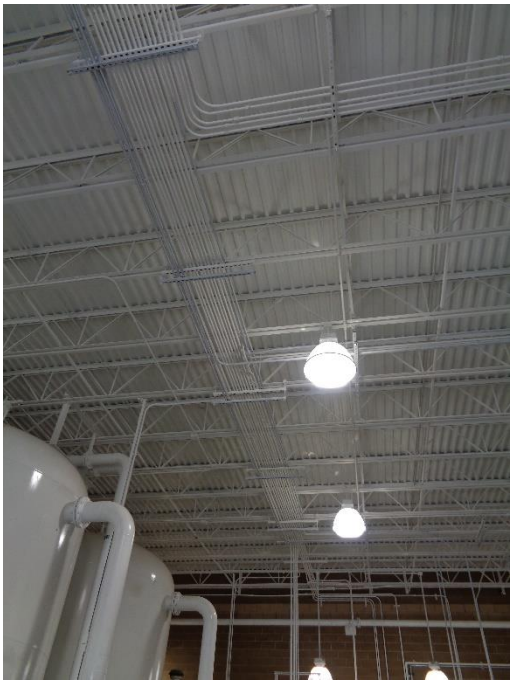

Location: Above Existing GAC Vessels
Description: Primed Conduit
Date: 09 January 2017 Direction: Up

Location: Newly Installed Influent and Effluent Tanks
Description: Primed and Painted Metal Framing, Conduit, and Flanges
Date: 09 January 2017 Direction: West

Location: Above Existing Influent Tank
Description: Primed and Painted ARV Drain Line
Date: 09 January 2017 Direction: North

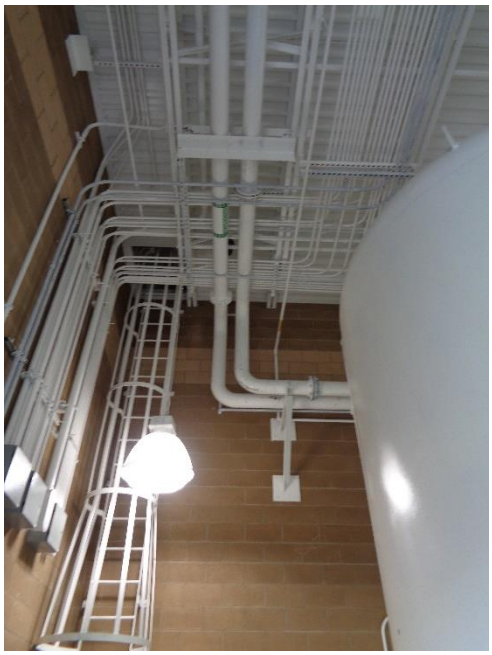

Location: Above Newly Installed GAC Vessel
Description: Primed and Painted ARV Drain Line
Date: 09 January 2017 Direction: South

EA Engineering, Science, and Technology, Inc.

DAILY SAFETY INSPECTION CHECKLIST (TO BE COMPLETED EACH DAY OF CONSTRUCTION OR HTRW SITE ACTIVITIES)

Site: BULK FUELS FACILITY EXPANSION
Location: KAFB BLDG 19150
Project No.: 67599DM01
Client: US ARMY CORP OF ENGINEERS

Prepared by SSHO: JOHN CODERA
Project Manager: DEVON JERCINOVIC
Date: 1-9-17

Rating	Y	N	N/A	Comments/Immediate Corrective Action[1]
Accident Prevention Plan (APP) and Site Safety and Health Plan (SSHP) General Requirements				
Are there new onsite personnel? • Did they receive pre-entry briefing and are their names recorded in field logbook or daily log? • Was the USACE PM made aware of the new personnel. • Required training and medical surveillance documentation received (e.g., 40-hr, 8 hr, etc.)?		X	X X X	
Did personnel sign in/out of site?	X			
Daily tailgate safety meetings conducted and documented?	X			
Were new activities performed today? Were hazards identified, discussed during the daily safety tailgate, and incorporated into revised APP/SSHP?		X		
New materials brought on site? MSDSs available?		X		
Exclusion (EZ), Contamination Reduction (CRZ), and Support Zones (SZ) delineated and enforced?			X	
General housekeeping measures in place to prevent hazards?	X			
Emergency Planning				
Were there any changes to emergency contact names, telephone numbers, or hospital? If so, were site personnel made aware and was information distributed/reposted.		X		
Adequate safety equipment inventory available?	X			
Fire extinguisher available (monthly inspection of extinguisher will suffice)	X			
Eyewash station(s) functioning and in place (weekly inspection of eye wash station will suffice)?	X			
First aid supplies available (weekly inspection of first aid kit will suffice)?	X			
Communication equipment readily available for emergencies?	X			
Any reported accidents/incidents at this site? If so, were accident reporting procedures followed?		X		
Air Monitoring				
Monitoring equipment specified in SSHP available and in working order? Air monitoring instrumentation for this site includes – check each if required/on site, note deficiencies in comments: • Combustible gas meter • Organic vapor analyzer • Contaminant specific analyzer for benzene (if total organic vapor concentrations exceed 0.5 ppm)			X	
Monitoring equipment calibrated and calibration records			X	

Y = Satisfactory or Yes; N = Unsatisfactory or No, N/A = Not applicable

Rating	Y	N	N/A	Comments/Immediate Corrective Action[1]
available?			X	
Environmental and personnel monitoring performed as specified in SSHP?			X	
PPE				
Proper dermal protection worn by EA and subcontracted employees when handling/ contacting hazardous chemicals or contaminated environmental media?			X	
Required PPE (hard hats, safety boots / shoes, eye protection with side shields, hearing protection) being worn by EA and subcontracted employees?	X			
PPE inspection completed by SSHO?	X			
Drill Rig Operations				
Daily rig inspection completed? Any equipment problems?			X	
Drill rigs/elevated equipment maintaining minimum 10-ft distance from energized (50 kV) overhead power lines?			X	
Investigation-derived Waste (IDW)				
Wastes properly staged, secured, and labeled at end of day?			X	
Additional Comments:				

John M. Cdebaca
Site Safety and Health Officer's Signature

1-9-17
Date

[1] If a deficiency is noted that cannot be immediately corrected, the SSHO will monitor the progress in correcting the deficiency and will document following:

- Date the deficiency was identified
- Description of the deficiency
- Name of the person responsible for correcting the deficiency
- Projected date of correction
- Actual date of correction.

Y = Satisfactory or Yes; N = Unsatisfactory or No, N/A = Not applicable

EA ENGINEERING, SCIENCE AND TECHNOLOGY, INC.
SAFETY MEETING REPORT

Date: 1-9-17	Time: 0700	Duration of meeting: 10 min	Project # 623990101
Location: KAFB BLDG 19150		Task: PAINTING, INSTALLING DISPLAY PANEL F.P.T.	

Type of meeting: X Daily ___ Weekly ___ Monthly ___ Other: _____

Items/Issues discussed:

1. HAND TOOL SAFETY
2. PPE
3. TIE-OFF IN LIFT
4. LIFT INSPECTION
5. HEARING PROTECTION

Attach minutes of safety meeting if taken.

Safety questions/issues raised:	Actions/Follow-up needed:
1. NONE	
2.	
3.	
4.	
5.	
6.	

Remarks:

Meeting conducted by:

JOHN CODE BACA

HEALTH AND SAFETY ACTIVITY REPORT

Site: BULK FUELS FACILITY EXPANSION Location: KAFB BLDG 19150

Weather Cond.: CLOUDY, COOL Onsite Hours: From 0700 To 1530

Changes in PPE Levels[1]	Work Operations	Reasons for Change
NO Changes		

Site Safety and Health Plan Violations	Corrective Action Specified	Corrective Action Taken[2] (yes/no)
NO SAFETY VIOLATIONS		

Observations and Comments:

Completed by: JOHN COOPER
Site Health and Safety Supervisor

Date: 1-9-17

[1] Only SSHO may change PPE levels, using only criteria specified in APP/SSHP.
[2] If a deficiency is noted that cannot be immediately corrected, the SSHO will monitor the progress in correcting the deficiency and will document following:

- Date the deficiency was identified
- Description of the deficiency
- Name of the person responsible for correcting the deficiency
- Projected date of correction
- Actual date of correction.

DAILY REPORT

(ATTACH ADDITIONAL SHEETS IF NECESSARY)

CONTRACT NAME:	Kirtland AFB Bulk Fuels Facility Expansion of Dissolved Plume GWTS Design	REPORT NO:	54
CONTRACT NUMBER:	W912DR-12-D-0006	REPORT DATE:	10 JAN 17
REVISION NUMBER:	-	REVISION DATE:	-
TASK ORDER NUMBER:	DM01	PROJECT NAME / LOCATION:	KAFB, ABQ, NM
PROJECT NUMBER:	62599DM01	PROJECT DESCRIPTION:	KAFB GWTS EXPANSION
PROJECT MANAGER:	Devon Jercinovic	FIELD QUALITY MANAGER:	Kevin McKeag
CONSTRUCTION MANAGER:		SITE SAFETY MANAGER:	John C de Baca

AM WEATHER:	Partly cloudy cool	PM WEATHER:	Partly cloudy cool, breeze	MAX TEMP (F):	54°		

SUMMARY OF WORK PERFORMED TODAY

Installed Effluent Line ARV and Painting

HEALTH AND SAFETY REPORT

SAFETY ACTIONS TAKEN TODAY/SAFETY INSPECTIONS CONDUCTED (Include Observations, Safety Violations, Corrective Instructions Given, Corrective Actions Taken, and Results of Safety Inspections Conducted:

Visual Observations, No Issues

TAILGATE TOPICS:

PPE, Lift Safety, Training Certifications, etc.

SAFE BEHAVIOR OBSERVATIONS/SELF-ASSESSMENTS:

Safe behavior observed

OPERATIONS/PRODUCTION REPORT

WORK FORCE – CONTRACTOR AND SUBCONTRACTOR

Company	Cumulative Total of Work Hours From Previous Report	Total Hours Today	Total Work Hours From Start of Injection Event
Tech sas	274	12	286
Ultra Painting	75	14	89
Rupert	546	5	551

EQUIPMENT ON HAND

Description of Equipment	Make/Model/ Manufacturer	Equipment ID Number	Inspection Performed By
Man lift	Genie GS-1930	#1	Javier Najera
Articulated man lift	JLG 400S	148369	Javier Najera

COMMENTS (acceptance status, inspection findings, etc.):

WORK AND/OR TESTS ACCOMPLISHED OR IN PROGRESS

Performed Work/Test for Today:
Installed Ethernet line ARV and Painting

Planned Work/Test for Tomorrow:
Painting

Planned Work/Test for Next Week:
Hydrostatic testing, programming/connecting electronics.

CHANGED CONDITIONS/DELAY/CONFLICTS ENCOUNTERED (List any conflicts with the project [i.e., scope of work and/or drawings], delays to the project attributable to site and weather conditions, etc. None

VISITORS AND DISCUSSIONS: None

QUALITY CONTROL REPORT

MATERIALS DELIVERED TO JOB SITE

Quantity/Volume/ Weight	Description of Materials Received	Make/Model/ Manufacturer	Material Lot Number	Inspection Performed By
None				

COMMENTS (acceptance status, inspection findings, etc.):

INSPECTIONS PERFORMED

Task/Activity Inspected	Inspection Performed	Findings
ARV Installation	ARV Visual Inspection	OK
Painting	Visual Inspection	OK

TESTS PERFORMED

Task/Activity Tested	Test Performed	Test Results (Pass/Fail) - Criteria
None		

QUALITY ISSUES AND RESOLUTIONS:

SUBMITTALS INSPECTION / REVIEW

Submittal No.	Submittal Description	Specification/Plan Reference	Submittal Approved?		Comment/Reason/Action
NA	Daily Report	–	Yes ☐	No ☐	Pending
NA	SBO	–	Yes ☐	No ☐	Pending
NA	PTSP	–	Yes ☐	No ☐	Pending

REGULATORY COMPLIANCE REPORT							
PERMIT INSPECTIONS PERFORMED: None							
WASTE ACCUMULATION/STOCKPILE AREA INSPECTION							
Inspection Performed By:	NA			Signature of Inspector:			
Accumulation / Stockpile Area Inspected:							
No of Bins:		No of Tankers		No of Roll-Off Boxes:		No. of Tanks	
Inspection Results: NA							
GENERAL COMMENTS							
General Comments: (rework, directives, etc.): All OK							
ATTACHMENTS							
List of Attachments: (examples, as applicable: submittals, meeting minutes, safety meeting minutes, COCs, weight tickets, manifests, profiles, rework item list, RFIs, DCNs, photographs, etc.): Photolog + Safety Documentation							
NOTE: Write all entries legibly in ink. Line out all unused portions or designate as "not applicable". Preparer signs first and last name on each completed daily report. This form may be filled out electronically and signed electronically.				PREPARER'S SIGNATURE		10 JAN 17 DATE	

Location: West Wall Between Effluent Skids
Description: Newly Installed ARV
Date: 10 January 2017 Direction: West

Location: Above Existing GAC Vessels
Description: Painted Conduit
Date: 10 January 2017 Direction: Up

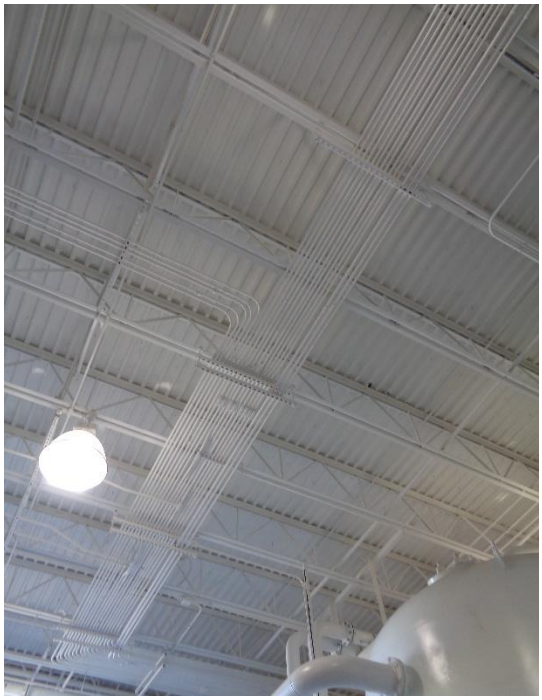

Location: Above Newly Installed GAC Vessels
Description: Painted Conduit
Date: 10 January 2017 Direction: Up

Location: Newly Installed GAC Vessels
Description: Touchup Paint on Newly Installed GAC Vessels
Date: 10 January 2017 Direction: South

Location: Existing GAC Vessels
Description: Touchup Paint on Existing GAC Vessels
Date: 10 January 2017 Direction: South

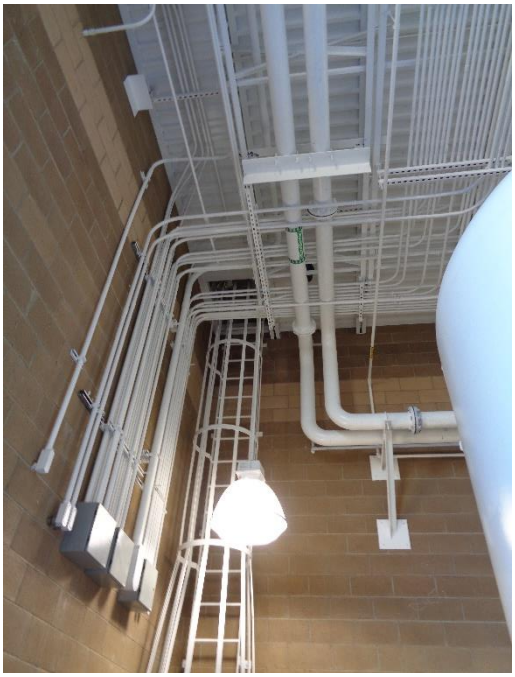

Location: Above Newly Installed GAC Vessels
Description: Painted Conduit
Date: 10 January 2017 Direction: Up

EA Engineering, Science, and Technology, Inc.

DAILY SAFETY INSPECTION CHECKLIST (TO BE COMPLETED EACH DAY OF CONSTRUCTION OR HTRW SITE ACTIVITIES)

Site: BULK FUELS FACILITY EXPANSION
Location: KAFB BLDG 19150
Project No.: 62599DM01
Client: US ARMY CORP OF ENGINEERS

Prepared by SSHO: JOHN COEBERGH
Project Manager: DEANN JERCINOVIC
Date: 1-10-17

Rating	Y	N	N/A	Comments/Immediate Corrective Action[1]
Accident Prevention Plan (APP) and Site Safety and Health Plan (SSHP) General Requirements				
Are there new onsite personnel? • Did they receive pre-entry briefing and are their names recorded in field logbook or daily log? • Was the USACE PM made aware of the new personnel. • Required training and medical surveillance documentation received (e.g., 40-hr, 8 hr, etc.)?		X	X X X	
Did personnel sign in/out of site?	X			
Daily tailgate safety meetings conducted and documented?	X			
Were new activities performed today? Were hazards identified, discussed during the daily safety tailgate, and incorporated into revised APP/SSHP?		X		
New materials brought on site? MSDSs available?		X		
Exclusion (EZ), Contamination Reduction (CRZ), and Support Zones (SZ) delineated and enforced?			X	
General housekeeping measures in place to prevent hazards?	X			
Emergency Planning				
Were there any changes to emergency contact names, telephone numbers, or hospital? If so, were site personnel made aware and was information distributed/reposted.	X			EMERGENCY CONTACT NAME CHANGED FROM ALEX SPILLER TO KEVEN MCKEAGE
Adequate safety equipment inventory available?	X			
Fire extinguisher available (monthly inspection of extinguisher will suffice)	X			
Eyewash station(s) functioning and in place (weekly inspection of eye wash station will suffice)?	X			
First aid supplies available (weekly inspection of first aid kit will suffice)?	X			
Communication equipment readily available for emergencies?	X			
Any reported accidents/incidents at this site? If so, were accident reporting procedures followed?		X		
Air Monitoring				
Monitoring equipment specified in SSHP available and in working order? Air monitoring instrumentation for this site includes – check each if required/on site, note deficiencies in comments: • Combustible gas meter • Organic vapor analyzer • Contaminant specific analyzer for benzene (if total organic vapor concentrations exceed 0.5 ppm)			X	
Monitoring equipment calibrated and calibration records			X	

Y = Satisfactory or Yes; N = Unsatisfactory or No, N/A = Not applicable

Rating	Y	N	N/A	Comments/Immediate Corrective Action[1]
available?			X	
Environmental and personnel monitoring performed as specified in SSHP?			X	
PPE				
Proper dermal protection worn by EA and subcontracted employees when handling/ contacting hazardous chemicals or contaminated environmental media?			X	
Required PPE (hard hats, safety boots / shoes, eye protection with side shields, hearing protection) being worn by EA and subcontracted employees?	X			
PPE inspection completed by SSHO?	X			
Drill Rig Operations				
Daily rig inspection completed? Any equipment problems?			X	
Drill rigs/elevated equipment maintaining minimum 10-ft distance from energized (50 kV) overhead power lines?			X	
Investigation-derived Waste (IDW)				
Wastes properly staged, secured, and labeled at end of day?			X	

Additional Comments:

John M. Cdebaca

Site Safety and Health Officer's Signature

1-10-17

Date

[1] If a deficiency is noted that cannot be immediately corrected, the SSHO will monitor the progress in correcting the deficiency and will document following:

- Date the deficiency was identified
- Description of the deficiency
- Name of the person responsible for correcting the deficiency
- Projected date of correction
- Actual date of correction.

Y = Satisfactory or Yes; N = Unsatisfactory or No, N/A = Not applicable

EA ENGINEERING, SCIENCE AND TECHNOLOGY, INC.
SAFETY MEETING REPORT

Date: 1-10-17	Time: 0700	Duration of meeting: 10min	Project # 62ST99DM01
Location: KAFB BLDG 19150		Task: PAINTING & INSTALLING AIR RELIEF VALVE	

Type of meeting: X Daily ___ Weekly ___ Monthly ___ Other: _____

Items/Issues discussed:

1. PPE
2. TIE-OFF IN LIFT
3. USE OF DOUBLE LANYARD
4. LIFT INSPECTION
5. TRAINING CERTIFICATION

Attach minutes of safety meeting if taken.

Safety questions/issues raised:	Actions/Follow-up needed:
1. USE OF DOUBLE LANYARD	NO ACTION NEEDED CLOSED W/ WORKERS
2.	
3.	
4.	
5.	
6.	

Remarks:

Meeting conducted by:
JOHN CODE BACA

HEALTH AND SAFETY ACTIVITY REPORT

Site: BULK FUELS FACILITY EXPANSION Location: KAFB B206 19150

Weather Cond.: PARTLY CLOUDY, COOL Onsite Hours: From 0700 To 1530

Changes in PPE Levels[1]	Work Operations	Reasons for Change
NO CHANGES		

Site Safety and Health Plan Violations	Corrective Action Specified	Corrective Action Taken[2] (yes/no)
NO SAFETY VIOLATIONS		

Observations and Comments:

Completed by: JOHN M. CODE JR
Site Health and Safety Supervisor

Date: 1-10-17

[1]Only SSHO may change PPE levels, using only criteria specified in APP/SSHP.
[2]If a deficiency is noted that cannot be immediately corrected, the SSHO will monitor the progress in correcting the deficiency and will document following:

- Date the deficiency was identified
- Description of the deficiency
- Name of the person responsible for correcting the deficiency
- Projected date of correction
- Actual date of correction.

DAILY REPORT

(ATTACH ADDITIONAL SHEETS IF NECESSARY)

CONTRACT NAME:	Kirtland AFB Bulk Fuels Facility Expansion of Dissolved Plume GWTS Design	REPORT NO:	55
CONTRACT NUMBER:	W912DR-12-D-0006	REPORT DATE:	11 JAN 17
REVISION NUMBER:	-	REVISION DATE:	-
TASK ORDER NUMBER:	DM01	PROJECT NAME / LOCATION:	KAFB, ABQ, NM
PROJECT NUMBER:	62599DM01	PROJECT DESCRIPTION:	KAFB GWTS Expansion
PROJECT MANAGER:	Devon Jercinovic	FIELD QUALITY MANAGER:	Kody Garcia
CONSTRUCTION MANAGER:	~~Lee Becker~~ KS	SITE SAFETY MANAGER:	John Cde Baca

AM WEATHER:	Cloudy, cool	PM WEATHER:	Mostly cloudy, windy, cool	MAX TEMP (F):	60°		

SUMMARY OF WORK PERFORMED TODAY

Painting

HEALTH AND SAFETY REPORT

SAFETY ACTIONS TAKEN TODAY/SAFETY INSPECTIONS CONDUCTED (Include Observations, Safety Violations, Corrective Instructions Given, Corrective Actions Taken, and Results of Safety Inspections Conducted:

visual observation, no issues

TAILGATE TOPICS:

PPE, overhead hazards, lift safety, eyewash station locations

SAFE BEHAVIOR OBSERVATIONS/SELF-ASSESSMENTS:

Safe behavior observed

OPERATIONS/PRODUCTION REPORT

WORK FORCE – CONTRACTOR AND SUBCONTRACTOR

Company	Cumulative Total of Work Hours From Previous Report	Total Hours Today	Total Work Hours From Start of Injection Event
Techsas	286	8	294
Ultra Painting	89	16	105

EQUIPMENT ON HAND

Description of Equipment	Make/Model/ Manufacturer	Equipment ID Number	Inspection Performed By
Manlift	Genie GS-1930	#1	Javier Najera
Actuated Manlift	JLG 400S	148369	Javier Najera

COMMENTS (acceptance status, inspection findings, etc.):

OK

WORK AND/OR TESTS ACCOMPLISHED OR IN PROGRESS

Performed Work/Test for Today:

Painting

Planned Work/Test for Tomorrow:

Painting ARV installation

Planned Work/Test for Next Week:

Hydrostatic testing, programming, electronic connecting

CHANGED CONDITIONS/DELAY/CONFLICTS ENCOUNTERED (List any conflicts with the project [i.e., scope of work and/or drawings], delays to the project attributable to site and weather conditions, etc.

VISITORS AND DISCUSSIONS: Lee Becker; current progression discussion

QUALITY CONTROL REPORT

MATERIALS DELIVERED TO JOB SITE

Quantity/Volume/ Weight	Description of Materials Received	Make/Model/ Manufacturer	Material Lot Number	Inspection Performed By
none				

COMMENTS (acceptance status, inspection findings, etc.): NA

INSPECTIONS PERFORMED

Task/Activity Inspected	Inspection Performed	Findings
Painting	visual inspection	OK

TESTS PERFORMED

Task/Activity Tested	Test Performed	Test Results (Pass/Fail) - Criteria
none		

QUALITY ISSUES AND RESOLUTIONS: NA

SUBMITTALS INSPECTION / REVIEW

Submittal No.	Submittal Description	Specification/Plan Reference	Submittal Approved?		Comment/Reason/Action
NA	Daily Report	_	Yes ☐	No ☐	Pending
NA	SBO	_	Yes ☐	No ☐	Pending
NA	PTSP	_	Yes ☐	No ☐	Pending

REGULATORY COMPLIANCE REPORT							
PERMIT INSPECTIONS PERFORMED: none							
WASTE ACCUMULATION/STOCKPILE AREA INSPECTION							
Inspection Performed By:	NA			Signature of Inspector:			
Accumulation / Stockpile Area Inspected:							
No of Bins:		No of Tankers		No of Roll-Off Boxes:		No. of Tanks	
Inspection Results: NA							
GENERAL COMMENTS							
General Comments: (rework, directives, etc.): OK							
ATTACHMENTS							
List of Attachments: (examples, as applicable: submittals, meeting minutes, safety meeting minutes, COCs, weight tickets, manifests, profiles, rework item list, RFIs, DCNs, photographs, etc.): Photo log and safety documentation							
NOTE: Write all entries legibly in ink. Line out all unused portions or designate as "not applicable". Preparer signs first and last name on each completed daily report. This form may be filled out electronically and signed electronically.				PREPARER'S SIGNATURE		DATE: 13 JAN 17	

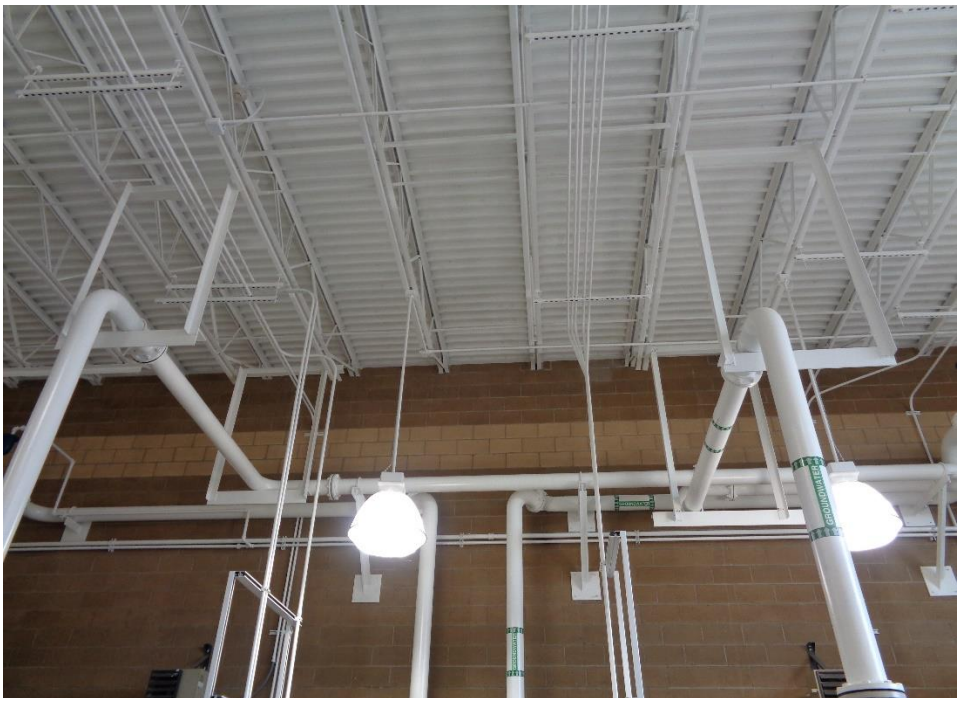

Location: North Wall Between Influent Skids
Description: Touchup Paint on Piping
Date: 11 January 2017 Direction: North

Location: Above Existing Effluent Feed Tank
Description: Touchup Paint on Pipe Hanger
Date: 11 January 2017 Direction: South

Location: Above Existing Influent Feed Tank
Description: Touchup Paint on Piping
Date: 11 January 2017 Direction: East

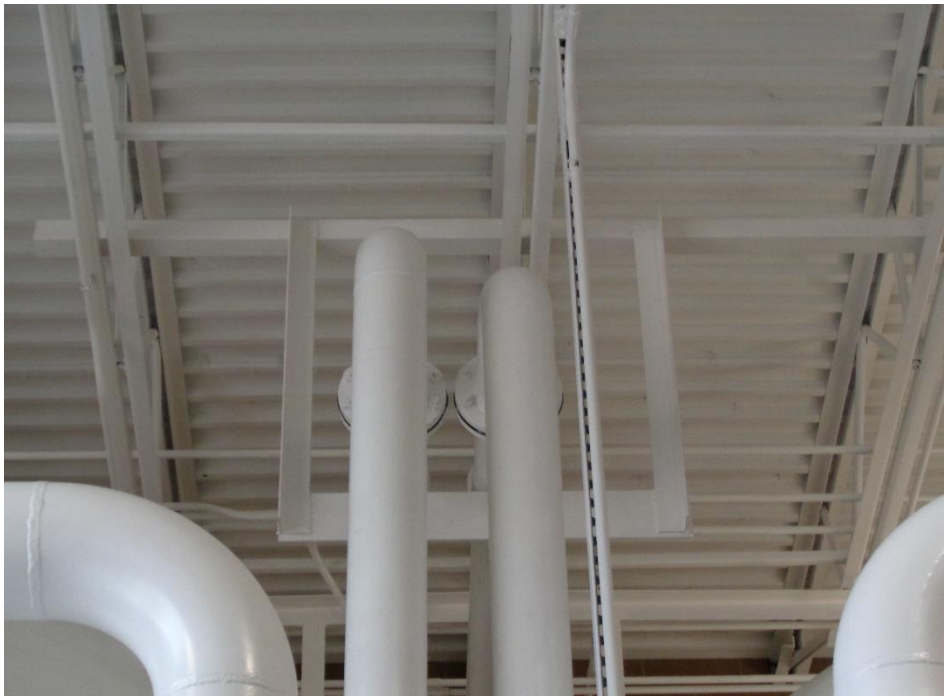

Location: Above Newly Installed GAC Vessels
Description: Touchup Paint on Pipe Hanger
Date: 11 January 2017 Direction: South

Location: Above Newly Installed GAC Vessels
Description: Touchup Paint on Piping and Pipe Hanger
Date: 11 January 2017 Direction: Up

EA Engineering, Science, and Technology, Inc.

DAILY SAFETY INSPECTION CHECKLIST (TO BE COMPLETED EACH DAY OF CONSTRUCTION OR HTRW SITE ACTIVITIES)

Site: BULK FUELS FACILITY EXPANSION
Location: KAFB BLDG 19150
Project No.: 62599DM01
Client: US ARMY CORP OF ENGINEERS

Prepared by SSHO: JOHN COE BAKA
Project Manager: DEVON JERCINOVIC
Date: 1-11-17

Rating	Y	N	N/A	Comments/Immediate Corrective Action[1]
Accident Prevention Plan (APP) and Site Safety and Health Plan (SSHP) General Requirements				
Are there new onsite personnel? • Did they receive pre-entry briefing and are their names recorded in field logbook or daily log? • Was the USACE PM made aware of the new personnel. • Required training and medical surveillance documentation received (e.g., 40-hr, 8 hr, etc.)?		X	X X X	
Did personnel sign in/out of site?	X			
Daily tailgate safety meetings conducted and documented?	X			
Were new activities performed today? Were hazards identified, discussed during the daily safety tailgate, and incorporated into revised APP/SSHP?		X		
New materials brought on site? MSDSs available?		X		
Exclusion (EZ), Contamination Reduction (CRZ), and Support Zones (SZ) delineated and enforced?			X	
General housekeeping measures in place to prevent hazards?	X			
Emergency Planning				
Were there any changes to emergency contact names, telephone numbers, or hospital? If so, were site personnel made aware and was information distributed/reposted.		X		
Adequate safety equipment inventory available?	X			
Fire extinguisher available (monthly inspection of extinguisher will suffice)	X			
Eyewash station(s) functioning and in place (weekly inspection of eye wash station will suffice)?	X			
First aid supplies available (weekly inspection of first aid kit will suffice)?	X			
Communication equipment readily available for emergencies?	X			
Any reported accidents/incidents at this site? If so, were accident reporting procedures followed?		X		
Air Monitoring				
Monitoring equipment specified in SSHP available and in working order? Air monitoring instrumentation for this site includes – check each if required/on site, note deficiencies in comments: • Combustible gas meter • Organic vapor analyzer • Contaminant specific analyzer for benzene (if total organic vapor concentrations exceed 0.5 ppm)			X	
Monitoring equipment calibrated and calibration records			X	

Y = Satisfactory or Yes; N = Unsatisfactory or No, N/A = Not applicable

Rating	Y	N	N/A	Comments/Immediate Corrective Action[1]
available?			X	
Environmental and personnel monitoring performed as specified in SSHP?			X	
PPE				
Proper dermal protection worn by EA and subcontracted employees when handling/ contacting hazardous chemicals or contaminated environmental media?			X	
Required PPE (hard hats, safety boots / shoes, eye protection with side shields, hearing protection) being worn by EA and subcontracted employees?	X			
PPE inspection completed by SSHO?	X			
Drill Rig Operations				
Daily rig inspection completed? Any equipment problems?			X	
Drill rigs/elevated equipment maintaining minimum 10-ft distance from energized (50 kV) overhead power lines?			X	
Investigation-derived Waste (IDW)				
Wastes properly staged, secured, and labeled at end of day?			X	

Additional Comments:

John M. Cole Baca

Site Safety and Health Officer's Signature

1-11-17

Date

[1]If a deficiency is noted that cannot be immediately corrected, the SSHO will monitor the progress in correcting the deficiency and will document following:

- Date the deficiency was identified
- Description of the deficiency
- Name of the person responsible for correcting the deficiency
- Projected date of correction
- Actual date of correction.

Y = Satisfactory or Yes; N = Unsatisfactory or No, N/A = Not applicable

EA ENGINEERING, SCIENCE AND TECHNOLOGY, INC.
SAFETY MEETING REPORT

Date: 1-11-17	Time: 0700	Duration of meeting: 10 min	Project # 623990701
Location: KAFB BLDG 19150		Task: PAINTING	

Type of meeting: X Daily ___ Weekly ___ Monthly ___ Other: _____

Items/Issues discussed:

1. PPE
2. TIE OFF IN LIFTS
3. LIFT INSPECTION
4.
5.

Attach minutes of safety meeting if taken.

Safety questions/issues raised:	Actions/Follow-up needed:
1. NONE	
2.	
3.	
4.	
5.	
6.	

Remarks:

Meeting conducted by:
JOHN COE BACA

HEALTH AND SAFETY ACTIVITY REPORT

Site: BULK FUELS FACILITY EXPANSION Location: KAFB BLDG 19150

Weather Cond.: CLOUDY, COOL Onsite Hours: From 0700 To 1500

Changes in PPE Levels[1]	Work Operations	Reasons for Change
NO CHANGES		

Site Safety and Health Plan Violations	Corrective Action Specified	Corrective Action Taken [2](yes/no)
NO SAFETY VIOLATIONS		

Observations and Comments:

Completed by: JOHN COEBADA Date: 1-11-17
Site Health and Safety Supervisor

[1]Only SSHO may change PPE levels, using only criteria specified in APP/SSHP.
[2]If a deficiency is noted that cannot be immediately corrected, the SSHO will monitor the progress in correcting the deficiency and will document following:

- Date the deficiency was identified
- Description of the deficiency
- Name of the person responsible for correcting the deficiency
- Projected date of correction
- Actual date of correction.

DAILY REPORT

(ATTACH ADDITIONAL SHEETS IF NECESSARY)

CONTRACT NAME:	Kirtland AFB Bulk Fuels Facility Expansion of Dissolved Plume GWTS Design	REPORT NO:	56
CONTRACT NUMBER:	W912DR-12-D-0006	REPORT DATE:	12 JAN 17
REVISION NUMBER:	-	REVISION DATE:	-
TASK ORDER NUMBER:	DM01	PROJECT NAME / LOCATION:	KAFB, ABQ, NM
PROJECT NUMBER:	62599DM01	PROJECT DESCRIPTION:	KAFB GWTS Expansion
PROJECT MANAGER:	Devon Jercinovic	FIELD QUALITY MANAGER:	Kody Garcia
CONSTRUCTION MANAGER:		SITE SAFETY MANAGER:	John Cde Baca

AM WEATHER:	Partially Cloudy, Cool	PM WEATHER:	Sunny, Cool	MAX TEMP (F):	55°		

SUMMARY OF WORK PERFORMED TODAY

Pipe labeling, ARV drain line installed

HEALTH AND SAFETY REPORT

SAFETY ACTIONS TAKEN TODAY/SAFETY INSPECTIONS CONDUCTED (Include Observations, Safety Violations, Corrective Instructions Given, Corrective Actions Taken, and Results of Safety Inspections Conducted:

Visual observation, no issues

TAILGATE TOPICS:

Lift Safety, overhead hazards, PPE, certifications, struck-by

SAFE BEHAVIOR OBSERVATIONS/SELF-ASSESSMENTS:

Safe behavior observed

OPERATIONS/PRODUCTION REPORT

WORK FORCE – CONTRACTOR AND SUBCONTRACTOR

Company	Cumulative Total of Work Hours From Previous Report	Total Hours Today	Total Work Hours From Start of Injection Event
Techsas	294	12	306
Rupert	551	8	559

EQUIPMENT ON HAND

Description of Equipment	Make/Model/ Manufacturer	Equipment ID Number	Inspection Performed By
Manlift	~~Z86~~ Genie GS 1930	#1	Javier Najera
Actuated Manlift	SLG 1000S	148369	Javier Najera

COMMENTS (acceptance status, inspection findings, etc.):

ok

WORK AND/OR TESTS ACCOMPLISHED OR IN PROGRESS

Performed Work/Test for Today:

Pipe labeling, ARV piping (drain line installed)

Planned Work/Test for Tomorrow:

none

Planned Work/Test for Next Week:

Hydrostatic testing, connecting and programming electronics

CHANGED CONDITIONS/DELAY/CONFLICTS ENCOUNTERED (List any conflicts with the project [i.e., scope of work and/or drawings], delays to the project attributable to site and weather conditions, etc.

VISITORS AND DISCUSSIONS: Jake Deuel with Sandia regarding robot rodeo.
Scott Clark and 2 others from Restoration brief visit

QUALITY CONTROL REPORT

MATERIALS DELIVERED TO JOB SITE

Quantity/Volume/ Weight	Description of Materials Received	Make/Model/ Manufacturer	Material Lot Number	Inspection Performed By
None				

COMMENTS (acceptance status, inspection findings, etc.): All OK

INSPECTIONS PERFORMED

Task/Activity Inspected	Inspection Performed	Findings
ARV Piping	visual inspection	OK
Labeling	visual insspection	OK

TESTS PERFORMED

Task/Activity Tested	Test Performed	Test Results (Pass/Fail) - Criteria
~~Piping~~ KH		
~~Labe~~ KH		

QUALITY ISSUES AND RESOLUTIONS: None

SUBMITTALS INSPECTION / REVIEW

Submittal No.	Submittal Description	Specification/Plan Reference	Submittal Approved?		Comment/Reason/Action
NA	Daily Report	_	Yes ☐	No ☐	Pending
NA	SBO	_	Yes ☐	No ☐	Pending
NA	PTSP	_	Yes ☐	No ☐	Pending

REGULATORY COMPLIANCE REPORT							
PERMIT INSPECTIONS PERFORMED: NA							
WASTE ACCUMULATION/STOCKPILE AREA INSPECTION							
Inspection Performed By:	N/A			Signature of Inspector:			
Accumulation / Stockpile Area Inspected:							
No of Bins:		No of Tankers		No of Roll-Off Boxes:		No. of Tanks	
Inspection Results: NA							
GENERAL COMMENTS							
General Comments: (rework, directives, etc.): none							
ATTACHMENTS							
List of Attachments: (examples, as applicable: submittals, meeting minutes, safety meeting minutes, COCs, weight tickets, manifests, profiles, rework item list, RFIs, DCNs, photographs, etc.): Photo log and safety documentation							
NOTE: Write all entries legibly in ink. Line out all unused portions or designate as "not applicable". Preparer signs first and last name on each completed daily report. This form may be filled out electronically and signed electronically.				Kody A. Garcia PREPARER'S SIGNATURE		12 JAN 17 DATE	

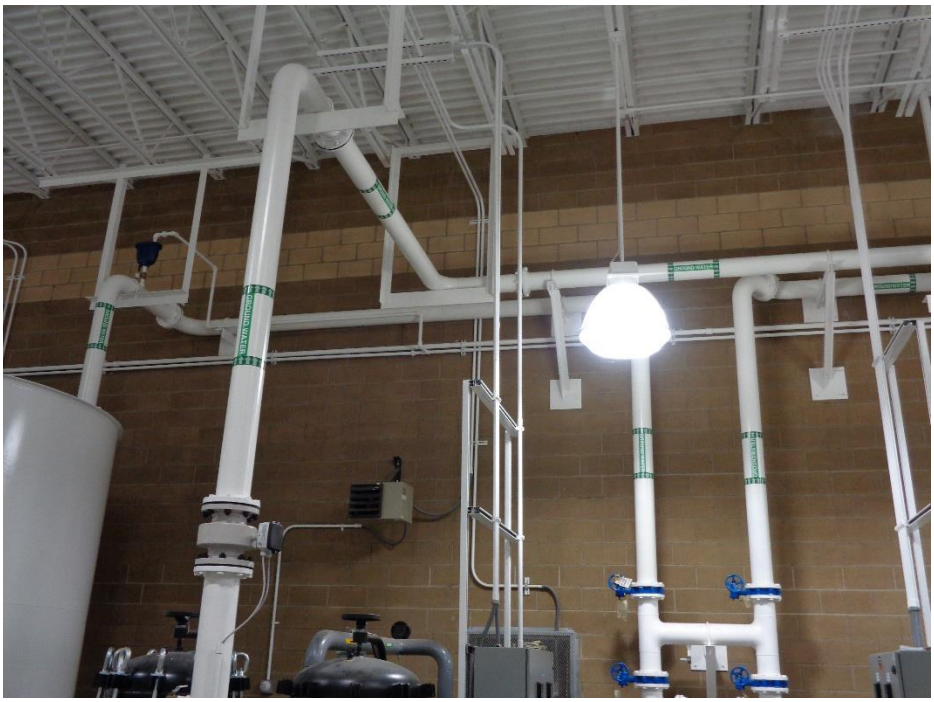

Location: Above Newly Installed Influent Pump Skid
Description: New Labeling for Piping
Date: 12 January 2017 Direction: North

Location: Between Existing GAC and Newly Installed Effluent Feed Tank
Description: New Labeling for Piping
Date: 12 January 2017 Direction: South

Location: Above Existing Influent Feed Tank
Description: New Labeling for Piping
Date: 12 January 2017 Direction: Up

Location: Above Newly Installed GAC Vessels
Description: New Labeling for Piping
Date: 12 January 2017 Direction: South

Location: Above Newly Installed GAC Vessels
Description: New Labeling for Piping
Date: 12 January 2017 Direction: Up

Location: Above Newly Installed GAC Vessels
Description: Newly Installed ARV Drain Pipe
Date: 12 January 2017 Direction: Up

EA Engineering, Science, and Technology, Inc.

DAILY SAFETY INSPECTION CHECKLIST
(TO BE COMPLETED EACH DAY OF CONSTRUCTION OR HTRW SITE ACTIVITIES)

Site: BULK FUELS FACILITY EXPANSION
Location: KAFB BLDG 19150
Project No.: 62599DM01
Client: US ARMY CORP OF ENGINEERS

Prepared by SSHO: JOHN COE BACA
Project Manager: DEVON JERCINOVIC
Date: 1-12-17

Rating	Y	N	N/A	Comments/Immediate Corrective Action[1]
Accident Prevention Plan (APP) and Site Safety and Health Plan (SSHP) General Requirements				
Are there new onsite personnel? • Did they receive pre-entry briefing and are their names recorded in field logbook or daily log? • Was the USACE PM made aware of the new personnel. • Required training and medical surveillance documentation received (e.g., 40-hr, 8 hr, etc.)?		X	X X X	
Did personnel sign in/out of site?	X			
Daily tailgate safety meetings conducted and documented?	X			
Were new activities performed today? Were hazards identified, discussed during the daily safety tailgate, and incorporated into revised APP/SSHP?		X		
New materials brought on site? MSDSs available?		X		
Exclusion (EZ), Contamination Reduction (CRZ), and Support Zones (SZ) delineated and enforced?			X	
General housekeeping measures in place to prevent hazards?	X			
Emergency Planning				
Were there any changes to emergency contact names, telephone numbers, or hospital? If so, were site personnel made aware and was information distributed/reposted.		X		
Adequate safety equipment inventory available?	X			
Fire extinguisher available (monthly inspection of extinguisher will suffice)	X			
Eyewash station(s) functioning and in place (weekly inspection of eye wash station will suffice)?	X			
First aid supplies available (weekly inspection of first aid kit will suffice)?	X			
Communication equipment readily available for emergencies?	X			
Any reported accidents/incidents at this site? If so, were accident reporting procedures followed?			X	
Air Monitoring				
Monitoring equipment specified in SSHP available and in working order? Air monitoring instrumentation for this site includes – check each if required/on site, note deficiencies in comments: • Combustible gas meter • Organic vapor analyzer • Contaminant specific analyzer for benzene (if total organic vapor concentrations exceed 0.5 ppm)			X	
Monitoring equipment calibrated and calibration records			X	

Y = Satisfactory or Yes; N = Unsatisfactory or No, N/A = Not applicable

Rating	Y	N	N/A	Comments/Immediate Corrective Action[1]
available?			X	
Environmental and personnel monitoring performed as specified in SSHP?			X	
PPE				
Proper dermal protection worn by EA and subcontracted employees when handling/ contacting hazardous chemicals or contaminated environmental media?			X	
Required PPE (hard hats, safety boots / shoes, eye protection with side shields, hearing protection) being worn by EA and subcontracted employees?	X			
PPE inspection completed by SSHO?	X			
Drill Rig Operations				
Daily rig inspection completed? Any equipment problems?			X	
Drill rigs/elevated equipment maintaining minimum 10-ft distance from energized (50 kV) overhead power lines?			X	
Investigation-derived Waste (IDW)				
Wastes properly staged, secured, and labeled at end of day?			X	

Additional Comments:

John M. Colt Baca

Site Safety and Health Officer's Signature

1-12-17

Date

[1]If a deficiency is noted that cannot be immediately corrected, the SSHO will monitor the progress in correcting the deficiency and will document following:

- Date the deficiency was identified
- Description of the deficiency
- Name of the person responsible for correcting the deficiency
- Projected date of correction
- Actual date of correction.

Y = Satisfactory or Yes; N = Unsatisfactory or No, N/A = Not applicable

EA ENGINEERING, SCIENCE AND TECHNOLOGY, INC.
SAFETY MEETING REPORT

Date: 1-12-17	Time: 0700	Duration of meeting: 10 min	Project # 623990mod
Location: KAFB Bldg 19150		Task: Installing Pipe & Labelling	

Type of meeting: X Daily ___ Weekly ___ Monthly ___ Other: _____

Items/Issues discussed:

1. Double lanyard use
2. Lift Inspection
3. PPE
4. TIE OFF IN LIFT
5.

Attach minutes of safety meeting if taken.

Safety questions/issues raised:	Actions/Follow-up needed:
1. NONE	
2.	
3.	
4.	
5.	
6.	

Remarks:

Meeting conducted by:
JOHN CDE BACA

HEALTH AND SAFETY ACTIVITY REPORT

Site: BULK FUELS FACILITY EXPANSION Location: KAFB BLDG 19150

Weather Cond.: CLEAR, COOL Onsite Hours: From 0700 To 1200

Changes in PPE Levels[1]	Work Operations	Reasons for Change
NO CHANGES		

Site Safety and Health Plan Violations	Corrective Action Specified	Corrective Action Taken[2] (yes/no)
NO SAFETY VIOLATIONS !!!		

Observations and Comments:

NONE

Completed by: JOHN CODE BACA Date: 1-12-17
Site Health and Safety Supervisor

[1]Only SSHO may change PPE levels, using only criteria specified in APP/SSHP.
[2]If a deficiency is noted that cannot be immediately corrected, the SSHO will monitor the progress in correcting the deficiency and will document following:

- Date the deficiency was identified
- Description of the deficiency
- Name of the person responsible for correcting the deficiency
- Projected date of correction
- Actual date of correction.

DAILY REPORT

(ATTACH ADDITIONAL SHEETS IF NECESSARY)

CONTRACT NAME:	Kirtland AFB Bulk Fuels Facility Expansion of Dissolved Plume GWTS Design	REPORT NO:	57
CONTRACT NUMBER:	W912DR-12-D-0006	REPORT DATE:	On 17 JAN 17
REVISION NUMBER:	-	REVISION DATE:	-
TASK ORDER NUMBER:	DM01	PROJECT NAME / LOCATION:	KAFB, ABQ, NM
PROJECT NUMBER:	62599DM01	PROJECT DESCRIPTION:	Kirtland AFB GWTS Expansion
PROJECT MANAGER:	Devon Jercinovic	FIELD QUALITY MANAGER:	Kevin McKeage
CONSTRUCTION MANAGER:	None	SITE SAFETY MANAGER:	Pete Perrari

AM WEATHER:	Mostly Cloudy cool	PM WEATHER:	Partly cloudy	MAX TEMP (F):	52°F		

SUMMARY OF WORK PERFORMED TODAY

Installed Conduit hanger and removed pressure indicator posts from influent skids.

HEALTH AND SAFETY REPORT

SAFETY ACTIONS TAKEN TODAY/SAFETY INSPECTIONS CONDUCTED (Include Observations, Safety Violations, Corrective Instructions Given, Corrective Actions Taken, and Results of Safety Inspections Conducted:

Visual observation, no issues.

TAILGATE TOPICS:

Hand tool safety, slips, trips, and falls, etc.

SAFE BEHAVIOR OBSERVATIONS/SELF-ASSESSMENTS:

Safe behavior observed.

OPERATIONS/PRODUCTION REPORT

WORK FORCE – CONTRACTOR AND SUBCONTRACTOR

Company	Cumulative Total of Work Hours From Previous Report	Total Hours Today	Total Work Hours From Start of Injection Event
Techsas	306	2	308

EQUIPMENT ON HAND

Description of Equipment	Make/Model/ Manufacturer	Equipment ID Number	Inspection Performed By
None			

COMMENTS (acceptance status, inspection findings, etc.):

OK

WORK AND/OR TESTS ACCOMPLISHED OR IN PROGRESS

Performed Work/Test for Today:
Installed Conduit hangers and removed pressure indicator posts from inflatable skids.

Planned Work/Test for Tomorrow:
Install hanging rack for 6" piping (flexible).

Planned Work/Test for Next Week:
GWTS Shakedown Testing

CHANGED CONDITIONS/DELAY/CONFLICTS ENCOUNTERED (List any conflicts with the project [i.e., scope of work and/or drawings], delays to the project attributable to site and weather conditions, etc. None

VISITORS AND DISCUSSIONS: Army arrived w/USACE to inspect door mechanisms.

QUALITY CONTROL REPORT

MATERIALS DELIVERED TO JOB SITE

Quantity/Volume/ Weight	Description of Materials Received	Make/Model/ Manufacturer	Material Lot Number	Inspection Performed By
4	10' painted Unistrut.			KM
Various	Fitting and bolts			KM
Various	Brackets			KM

COMMENTS (acceptance status, inspection findings, etc.): All OK

INSPECTIONS PERFORMED

Task/Activity Inspected	Inspection Performed	Findings
Conduit hangers	Visual Inspection	OK
Removed posts	Visual Inspection	OK, will be filled in.

TESTS PERFORMED

Task/Activity Tested	Test Performed	Test Results (Pass/Fail) - Criteria
None		

QUALITY ISSUES AND RESOLUTIONS: None

SUBMITTALS INSPECTION / REVIEW

Submittal No.	Submittal Description	Specification/Plan Reference	Submittal Approved?		Comment/Reason/Action
NA	Daily Report	_	Yes ☐	No ☐	Pending
NA	SBO	_	Yes ☐	No ☐	Pending
NA	PTSP	_	Yes ☐	No ☐	Pending

REGULATORY COMPLIANCE REPORT							
PERMIT INSPECTIONS PERFORMED: NA							
WASTE ACCUMULATION/STOCKPILE AREA INSPECTION							
Inspection Performed By:	NA			Signature of Inspector:			
Accumulation / Stockpile Area Inspected:							
No of Bins:		No of Tankers		No of Roll-Off Boxes:		No. of Tanks	
Inspection Results: NA							
GENERAL COMMENTS							
General Comments: (rework, directives, etc.): None							
ATTACHMENTS							
List of Attachments: (examples, as applicable: submittals, meeting minutes, safety meeting minutes, COCs, weight tickets, manifests, profiles, rework item list, RFIs, DCNs, photographs, etc.): Photo log and Safety Documentation							
NOTE: Write all entries legibly in ink. Line out all unused portions or designate as "not applicable". Preparer signs first and last name on each completed daily report. This form may be filled out electronically and signed electronically.				PREPARER'S SIGNATURE		DATE: 17 JAN 17	

Location: Floor Near Existing Influent Tank
Description: Various Fittings and Bolts
Date: 17 January 2017 Direction: Down

Location: Floor Near Existing Influent Tank
Description: Various Brackets
Date: 17 January 2017 Direction: Down

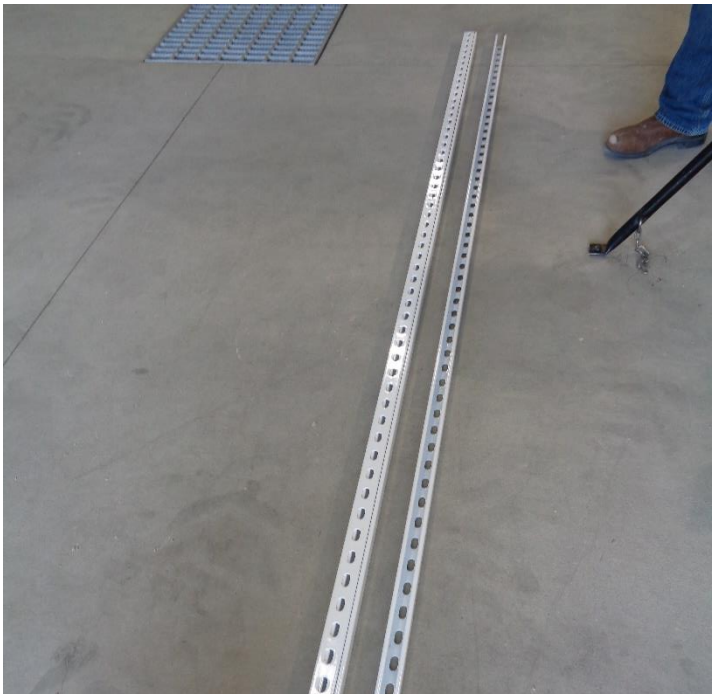

Location: Floor Near Existing Influent Tank
Description: Painted Unistrut
Date: 17 January 2017 Direction: Down

Location: Existing Influent Skid
Description: Newly Installed Conduit Hanger
Date: 17 January 2017 Direction: Northwest

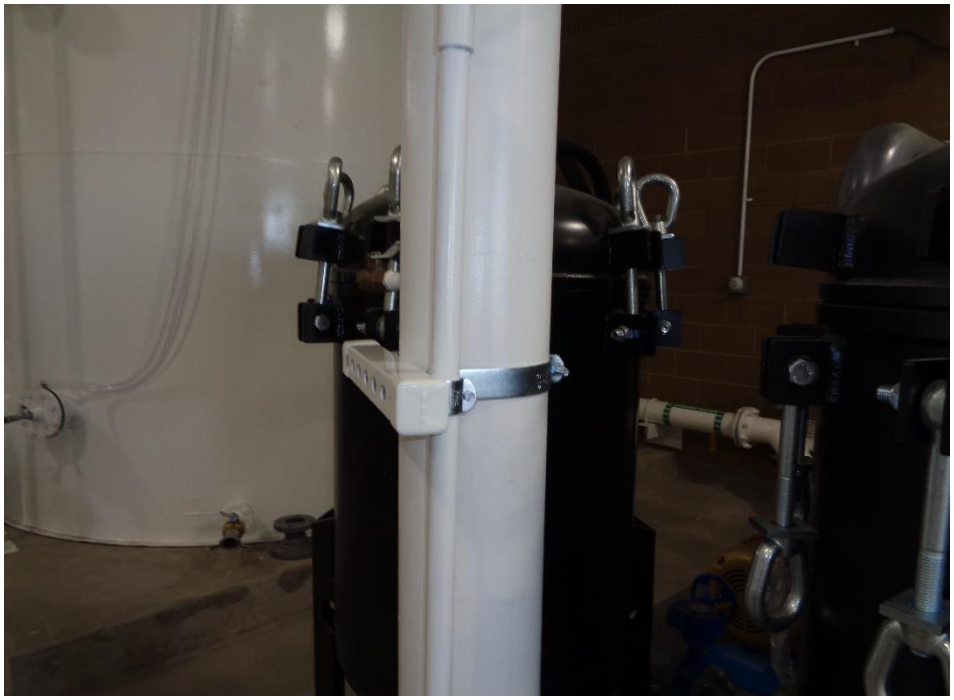

Location: Newly Installed Influent Skid
Description: Newly Installed Conduit Hanger
Date: 17 January 2017 Direction: Northwest

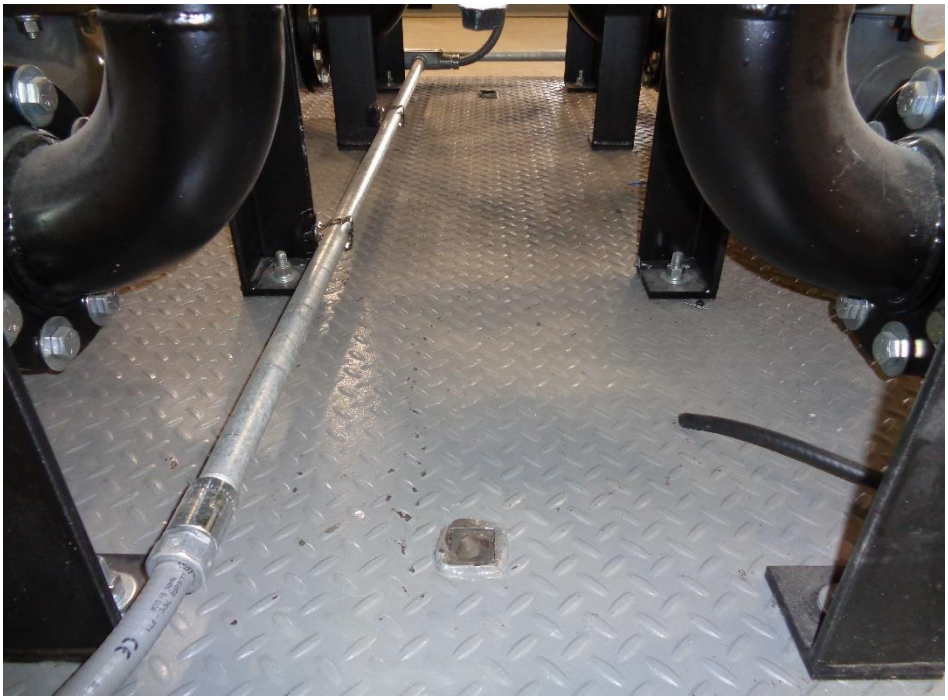

Location: Newly Installed Influent Skid
Description: Removed Pressure Indicator Posts
Date: 17 January 2017 Direction: East

Location: Existing Influent Skid
Description: Removed Pressure Indicator Posts
Date: 17 January 2017 Direction: West

EA Engineering, Science, and Technology, Inc.

DAILY SAFETY INSPECTION CHECKLIST (TO BE COMPLETED EACH DAY OF CONSTRUCTION OR HTRW SITE ACTIVITIES)

Site: Bulk Fuels Facility Expansion
Location: KAFB Bldg 1915
Project No.: [redacted] 625990401
Client: US Army Corps of Engineers
Prepared by SSHO: Pete Ferrari
Project Manager: Dean Tenebaum
Date: 1/17/17

Rating	Y	N	N/A	Comments/Immediate Corrective Action[1]
Accident Prevention Plan (APP) and Site Safety and Health Plan (SSHP) General Requirements				
Are there new onsite personnel? • Did they receive pre-entry briefing and are their names recorded in field logbook or daily log? • Was the USACE PM made aware of the new personnel. • Required training and medical surveillance documentation received (e.g., 40-hr, 8 hr, etc.)?		✓	✓ ✓ ✓	
Did personnel sign in/out of site?	✓			
Daily tailgate safety meetings conducted and documented?	✓			
Were new activities performed today? Were hazards identified, discussed during the daily safety tailgate, and incorporated into revised APP/SSHP?		✓		
New materials brought on site? MSDSs available?		✓		
Exclusion (EZ), Contamination Reduction (CRZ), and Support Zones (SZ) delineated and enforced?			✓	
General housekeeping measures in place to prevent hazards?	✓			
Emergency Planning				
Were there any changes to emergency contact names, telephone numbers, or hospital? If so, were site personnel made aware and was information distributed/reposted.		✓		
Adequate safety equipment inventory available?	✓			
Fire extinguisher available (monthly inspection of extinguisher will suffice)	✓			
Eyewash station(s) functioning and in place (weekly inspection of eye wash station will suffice)?	✓			
First aid supplies available (weekly inspection of first aid kit will suffice)?	✓			
Communication equipment readily available for emergencies?	✓			
Any reported accidents/incidents at this site? If so, were accident reporting procedures followed?			✓	
Air Monitoring				
Monitoring equipment specified in SSHP available and in working order? Air monitoring instrumentation for this site includes – check each if required/on site, note deficiencies in comments: • Combustible gas meter • Organic vapor analyzer • Contaminant specific analyzer for benzene (if total organic vapor concentrations exceed 0.5 ppm)			✓	
Monitoring equipment calibrated and calibration records			✓	

Y = Satisfactory or Yes; N = Unsatisfactory or No, N/A = Not applicable

Rating	Y	N	N/A	Comments/Immediate Corrective Action[1]
available?			✓	
Environmental and personnel monitoring performed as specified in SSHP?			✓	
PPE				
Proper dermal protection worn by EA and subcontracted employees when handling/ contacting hazardous chemicals or contaminated environmental media?			✓	
Required PPE (hard hats, safety boots / shoes, eye protection with side shields, hearing protection) being worn by EA and subcontracted employees?	✓			
PPE inspection completed by SSHO?	✓			
Drill Rig Operations				
Daily rig inspection completed? Any equipment problems?			✓	
Drill rigs/elevated equipment maintaining minimum 10-ft distance from energized (50 kV) overhead power lines?			✓	
Investigation-derived Waste (IDW)				
Wastes properly staged, secured, and labeled at end of day?			✓	

Additional Comments:

Peter Demand
Site Safety and Health Officer's Signature

1/17/17
Date

[1]If a deficiency is noted that cannot be immediately corrected, the SSHO will monitor the progress in correcting the deficiency and will document following:

- Date the deficiency was identified
- Description of the deficiency
- Name of the person responsible for correcting the deficiency
- Projected date of correction
- Actual date of correction.

Y = Satisfactory or Yes; N = Unsatisfactory or No, N/A = Not applicable

EA ENGINEERING, SCIENCE AND TECHNOLOGY, INC.
SAFETY MEETING REPORT

Date: 1/17/17	Time: 1350	Duration of meeting: 5 min	Project #
Location: HAFB BLDG 19150		Task: Installing storage hardware	

Type of meeting: ___ Daily ___ Weekly ___ Monthly ___ Other: _____

Items/Issues discussed:

1. Slip trip falls
2. Hand tool safety
3.
4.
5.

Attach minutes of safety meeting if taken.

Safety questions/issues raised:	Actions/Follow-up needed:
1. None	
2.	
3.	
4.	
5.	
6.	

Remarks:

Meeting conducted by: Patrick Inman

HEALTH AND SAFETY ACTIVITY REPORT

Site: Bulk Fuels Facility Expansion Location: KAFB BLDG 19250

Weather Cond.: Mostly Cloudy, cool Onsite Hours: From 1350 To 1550

Changes in PPE Levels[1]	Work Operations	Reasons for Change
No Changes		

Site Safety and Health Plan Violations	Corrective Action Specified	Corrective Action Taken[2] (yes/no)
No safety violations		

Observations and Comments:

None

Completed by: Peter Jensen Date: 1/17/17
Site Health and Safety Supervisor

[1]Only SSHO may change PPE levels, using only criteria specified in APP/SSHP.
[2]If a deficiency is noted that cannot be immediately corrected, the SSHO will monitor the progress in correcting the deficiency and will document following:

- Date the deficiency was identified
- Description of the deficiency
- Name of the person responsible for correcting the deficiency
- Projected date of correction
- Actual date of correction.

DAILY REPORT

(ATTACH ADDITIONAL SHEETS IF NECESSARY)

CONTRACT NAME:	Kirtland AFB Bulk Fuels Facility Expansion of Dissolved Plume GWTS Design	REPORT NO:	58
CONTRACT NUMBER:	W912DR-12-D-0006	REPORT DATE:	18JAN~~18~~17
REVISION NUMBER:	-	REVISION DATE:	-
TASK ORDER NUMBER:	DM01	PROJECT NAME / LOCATION:	KAFB, ABQ, NM
PROJECT NUMBER:	62599DM01	PROJECT DESCRIPTION:	KAFB GWTS Expansion
PROJECT MANAGER:	Devon Jercinovic	FIELD QUALITY MANAGER:	Kody Garcia
CONSTRUCTION MANAGER:	Lucas Rief	SITE SAFETY MANAGER:	Pete Ferrari

AM WEATHER:	Cloudy, humid, light rain, cool	PM WEATHER:	Partly Cloudy	MAX TEMP (F):	47°		

SUMMARY OF WORK PERFORMED TODAY

Hanging rack installation

HEALTH AND SAFETY REPORT

SAFETY ACTIONS TAKEN TODAY/SAFETY INSPECTIONS CONDUCTED (Include Observations, Safety Violations, Corrective Instructions Given, Corrective Actions Taken, and Results of Safety Inspections Conducted:

Visual observation, no issues

TAILGATE TOPICS:

PPE, Pinch points, power tools, eyewash stations

SAFE BEHAVIOR OBSERVATIONS/SELF-ASSESSMENTS:

Safe behavior observed

OPERATIONS/PRODUCTION REPORT

WORK FORCE – CONTRACTOR AND SUBCONTRACTOR

Company	Cumulative Total of Work Hours From Previous Report	Total Hours Today	Total Work Hours From Start of Injection Event
Techsas	308	8	316

EQUIPMENT ON HAND

Description of Equipment	Make/Model/ Manufacturer	Equipment ID Number	Inspection Performed By
none			

COMMENTS (acceptance status, inspection findings, etc.):

OK

WORK AND/OR TESTS ACCOMPLISHED OR IN PROGRESS

Performed Work/Test for Today:

Hanging rack installation

Planned Work/Test for Tomorrow:

Totalizer/Large counter installation, Electric cable terminate

Planned Work/Test for Next Week:

GWTS Shakedown Testing

CHANGED CONDITIONS/DELAY/CONFLICTS ENCOUNTERED (List any conflicts with the project [i.e., scope of work and/or drawings], delays to the project attributable to site and weather conditions, etc. none

VISITORS AND DISCUSSIONS:

Rain for Rent: checking water storage tank current status

QUALITY CONTROL REPORT

MATERIALS DELIVERED TO JOB SITE

Quantity/Volume/ Weight	Description of Materials Received	Make/Model/ Manufacturer	Material Lot Number	Inspection Performed By
none				

COMMENTS (acceptance status, inspection findings, etc.):

OK

INSPECTIONS PERFORMED

Task/Activity Inspected	Inspection Performed	Findings
Valve installation	Visual inspection	OK
hanging rack	Visual inspection	OK

TESTS PERFORMED

Task/Activity Tested	Test Performed	Test Results (Pass/Fail) - Criteria
none		

QUALITY ISSUES AND RESOLUTIONS: none

SUBMITTALS INSPECTION / REVIEW

Submittal No.	Submittal Description	Specification/Plan Reference	Submittal Approved?		Comment/Reason/Action
NA	Daily Report	_	Yes ☐	No ☐	Pending
NA	SBO	_	Yes ☐	No ☐	Pending
NA	PTSP	_	Yes ☐	No ☐	Pending

REGULATORY COMPLIANCE REPORT							
PERMIT INSPECTIONS PERFORMED: NA							
WASTE ACCUMULATION/STOCKPILE AREA INSPECTION							
Inspection Performed By:	NA			Signature of Inspector:			
Accumulation / Stockpile Area Inspected:							
No of Bins:		No of Tankers		No of Roll-Off Boxes:		No. of Tanks	
Inspection Results: NA							
GENERAL COMMENTS							
General Comments: (rework, directives, etc.): none							
ATTACHMENTS							
List of Attachments: (examples, as applicable: submittals, meeting minutes, safety meeting minutes, COCs, weight tickets, manifests, profiles, rework item list, RFIs, DCNs, photographs, etc.): Photo log and safety documentation							
NOTE: Write all entries legibly in ink. Line out all unused portions or designate as "not applicable". Preparer signs first and last name on each completed daily report. This form may be filled out electronically and signed electronically.	Kody A. Garcia (PREPARER'S SIGNATURE)			18 JAN 17 (DATE)			

Location: Newly Installed Effluent Feed Tank
Description: New Valve (Sight Glass in Progress)
Date: 18 January 2017 Direction: Northwest

Location: West Wall Inside GWTS
Description: New Hanging Rack for Backwash Flex Hose (In Progress)
Date: 18 January 2017 Direction: West

EA Engineering, Science, and Technology, Inc.

DAILY SAFETY INSPECTION CHECKLIST (TO BE COMPLETED EACH DAY OF CONSTRUCTION OR HTRW SITE ACTIVITIES)

Site: Bulk Fuels Facility Expansion
Location: KAFB @LOG PEF 19/50
Project No.: 62599DM01
Client: US Army CORP of Engineers

Prepared by SSHO: Pete Ferrari
Project Manager: Devon Senchenic
Date: 1-18-17

Rating	Y	N	N/A	Comments/Immediate Corrective Action[1]
Accident Prevention Plan (APP) and Site Safety and Health Plan (SSHP) General Requirements				
Are there new onsite personnel? • Did they receive pre-entry briefing and are their names recorded in field logbook or daily log? • Was the USACE PM made aware of the new personnel. • Required training and medical surveillance documentation received (e.g., 40-hr, 8 hr, etc.)?	✓		✓	Luke Rieff
Did personnel sign in/out of site?	✓			
Daily tailgate safety meetings conducted and documented?	✓			
Were new activities performed today? Were hazards identified, discussed during the daily safety tailgate, and incorporated into revised APP/SSHP?		✓		
New materials brought on site? MSDSs available?		✓		
Exclusion (EZ), Contamination Reduction (CRZ), and Support Zones (SZ) delineated and enforced?	✓		✓	
General housekeeping measures in place to prevent hazards?	✓			
Emergency Planning				
Were there any changes to emergency contact names, telephone numbers, or hospital? If so, were site personnel made aware and was information distributed/reposted.		✓		
Adequate safety equipment inventory available?	✓			
Fire extinguisher available (monthly inspection of extinguisher will suffice)	✓			
Eyewash station(s) functioning and in place (weekly inspection of eye wash station will suffice)?	✓			
First aid supplies available (weekly inspection of first aid kit will suffice)?	✓			
Communication equipment readily available for emergencies?	✓		✓	
Any reported accidents/incidents at this site? If so, were accident reporting procedures followed?		✓		
Air Monitoring				
Monitoring equipment specified in SSHP available and in working order? Air monitoring instrumentation for this site includes – check each if required/on site, note deficiencies in comments: • Combustible gas meter • Organic vapor analyzer • Contaminant specific analyzer for benzene (if total organic vapor concentrations exceed 0.5 ppm)			✓	
Monitoring equipment calibrated and calibration records			✓	

Y = Satisfactory or Yes; N = Unsatisfactory or No, N/A = Not applicable

Rating	Y	N	N/A	Comments/Immediate Corrective Action[1]
available?				
Environmental and personnel monitoring performed as specified in SSHP?				
PPE				
Proper dermal protection worn by EA and subcontracted employees when handling/ contacting hazardous chemicals or contaminated environmental media?				
Required PPE (hard hats, safety boots / shoes, eye protection with side shields, hearing protection) being worn by EA and subcontracted employees?				
PPE inspection completed by SSHO?				
Drill Rig Operations				
Daily rig inspection completed? Any equipment problems?				
Drill rigs/elevated equipment maintaining minimum 10-ft distance from energized (50 kV) overhead power lines?				
Investigation-derived Waste (IDW)				
Wastes properly staged, secured, and labeled at end of day?				

Additional Comments:

Peter Lenard

Site Safety and Health Officer's Signature

1/18/17

Date

[1] If a deficiency is noted that cannot be immediately corrected, the SSHO will monitor the progress in correcting the deficiency and will document following:

- Date the deficiency was identified
- Description of the deficiency
- Name of the person responsible for correcting the deficiency
- Projected date of correction
- Actual date of correction.

Y = Satisfactory or Yes; N = Unsatisfactory or No, N/A = Not applicable

EA ENGINEERING, SCIENCE AND TECHNOLOGY, INC.
SAFETY MEETING REPORT

Date: 1-18-17	Time: 0715	Duration of meeting: 5 min	Project #
Location: KAFB BLDG 9150		Task: Installing unistrut storage supports	

Type of meeting: ✓ Daily ____ Weekly ____ Monthly ____ Other: _____

Items/Issues discussed:

1. Route to hospital
2. Emergency contacts
3. Slip trip fall over sump grates
4. Careful with sharp edges of newly
5. cut unistrut

Attach minutes of safety meeting if taken.

Safety questions/issues raised:	Actions/Follow-up needed:
1. None	
2.	
3.	
4.	
5.	
6.	

Remarks:

Meeting conducted by: Peter Zumwalt

HEALTH AND SAFETY ACTIVITY REPORT

Site: Bulk Fuels Facility Expansion Location: KAFB BLDG 19150

Weather Cond.: Overcast, sprinkling in AM. Onsite Hours: From 0700 To _____

Changes in PPE Levels[1]	Work Operations	Reasons for Change
No Changes		

Site Safety and Health Plan Violations	Corrective Action Specified	Corrective Action Taken [2](yes/no)
None		

Observations and Comments:

None

Completed by: Peter Jensen Date: 1-18-17
Site Health and Safety Supervisor

[1]Only SSHO may change PPE levels, using only criteria specified in APP/SSHP.
[2]If a deficiency is noted that cannot be immediately corrected, the SSHO will monitor the progress in correcting the deficiency and will document following:

- Date the deficiency was identified
- Description of the deficiency
- Name of the person responsible for correcting the deficiency
- Projected date of correction
- Actual date of correction.

DAILY REPORT

(ATTACH ADDITIONAL SHEETS IF NECESSARY)

CONTRACT NAME:	Kirtland AFB Bulk Fuels Facility Expansion of Dissolved Plume GWTS Design	REPORT NO:	59
CONTRACT NUMBER:	W912DR-12-D-0006	REPORT DATE:	19 JAN 17
REVISION NUMBER:	-	REVISION DATE:	-
TASK ORDER NUMBER:	DM01	PROJECT NAME / LOCATION:	KAFB, ABQ, NM
PROJECT NUMBER:	62599DM01	PROJECT DESCRIPTION:	KAFB GWTS Expansion
PROJECT MANAGER:	Devon Jercinovic	FIELD QUALITY MANAGER:	Kevin Release
CONSTRUCTION MANAGER:	Lucas Rief	SITE SAFETY MANAGER:	John Cde Baca

AM WEATHER:	Cloudy, cool	PM WEATHER:	Partly cloudy cool	MAX TEMP (F):	48°		

SUMMARY OF WORK PERFORMED TODAY

Completed conduit to the level transducers in the existing tanks and wiring. Installing new sight glasses and hose hangers.

HEALTH AND SAFETY REPORT

SAFETY ACTIONS TAKEN TODAY/SAFETY INSPECTIONS CONDUCTED (Include Observations, Safety Violations, Corrective Instructions Given, Corrective Actions Taken, and Results of Safety Inspections Conducted:

Visual observation, I+C did not have lift operator paperwork, so Wilson Electric operated the lift for them.

TAILGATE TOPICS:

Lift safety, hand tool safety

SAFE BEHAVIOR OBSERVATIONS/SELF-ASSESSMENTS:

Safe behavior observed.

OPERATIONS/PRODUCTION REPORT

WORK FORCE – CONTRACTOR AND SUBCONTRACTOR

Company	Cumulative Total of Work Hours From Previous Report	Total Hours Today	Total Work Hours From Start of Injection Event
Techsas	316	10	326
Wilson Electric	300	6	306
I+C Solutions	90	13	103

EQUIPMENT ON HAND

Description of Equipment	Make/Model/ Manufacturer	Equipment ID Number	Inspection Performed By
Manlift #1	Genie GS-1930		Stephen Spiess

COMMENTS (acceptance status, inspection findings, etc.):

OK

WORK AND/OR TESTS ACCOMPLISHED OR IN PROGRESS

Performed Work/Test for Today:
Completed conduit to the level transducers in the existing tanks and wiring. Installed new sight glasses and hose hangers.

Planned Work/Test for Tomorrow:
Complete remaining conduit and wiring to level transducers, remaining sight glasses and install the PLC card. Hydrostatic testing to commence at 8 am.

Planned Work/Test for Next Week:
Shakedown testing.

CHANGED CONDITIONS/DELAY/CONFLICTS ENCOUNTERED (List any conflicts with the project [i.e., scope of work and/or drawings], delays to the project attributable to site and weather conditions, etc. On Existing Effluent Tank, exchanged sight glass and transducer locations

VISITORS AND DISCUSSIONS: Chemega technician stopped by to repair Southern doors.

QUALITY CONTROL REPORT

MATERIALS DELIVERED TO JOB SITE

Quantity/Volume/ Weight	Description of Materials Received	Make/Model/ Manufacturer	Material Lot Number	Inspection Performed By
Various	PLC connectors / blocks	Allen Bradley		KM

COMMENTS (acceptance status, inspection findings, etc.):

INSPECTIONS PERFORMED

Task/Activity Inspected	Inspection Performed	Findings
Conduit and Wiring	Visual Inspections	OK
Sight Glasses and Hoses	Visual Inspection	OK

TESTS PERFORMED

Task/Activity Tested	Test Performed	Test Results (Pass/Fail) - Criteria
None		

QUALITY ISSUES AND RESOLUTIONS: None

SUBMITTALS INSPECTION / REVIEW

Submittal No.	Submittal Description	Specification/Plan Reference	Submittal Approved?		Comment/Reason/Action
NA	Daily Report	–	Yes ☐	No ☐	Pending
NA	SBO	–	Yes ☐	No ☐	Pending
NA	PTSP	–	Yes ☐	No ☐	Pending

REGULATORY COMPLIANCE REPORT							
PERMIT INSPECTIONS PERFORMED: NA							
WASTE ACCUMULATION/STOCKPILE AREA INSPECTION							
Inspection Performed By:	NA			Signature of Inspector:			
Accumulation / Stockpile Area Inspected:							
No of Bins:		No of Tankers		No of Roll-Off Boxes:		No. of Tanks	
Inspection Results: NA							
GENERAL COMMENTS							
General Comments: (rework, directives, etc.): None							
ATTACHMENTS							
List of Attachments: (examples, as applicable: submittals, meeting minutes, safety meeting minutes, COCs, weight tickets, manifests, profiles, rework item list, RFIs, DCNs, photographs, etc.): Photo log and Safety Documentation							
NOTE: Write all entries legibly in ink. Line out all unused portions or designate as "not applicable". Preparer signs first and last name on each completed daily report. This form may be filled out electronically and signed electronically.				PREPARER'S SIGNATURE		DATE: 19 JAN 17	

EA Engineering, Science, and Technology, Inc.

DAILY SAFETY INSPECTION CHECKLIST (TO BE COMPLETED EACH DAY OF CONSTRUCTION OR HTRW SITE ACTIVITIES)

Site: BULK FUELS FACILITY EXPANSION
Location: KAFB BLDG 19150
Project No.: 625990M01
Client: US ARMY CORP OF ENGINEERS

Prepared by SSHO: JOHN CODY BACA
Project Manager: DEVON JERCINOVIC
Date: 1-19-17

Rating	Y	N	N/A	Comments/Immediate Corrective Action[1]
Accident Prevention Plan (APP) and Site Safety and Health Plan (SSHP) General Requirements				
Are there new onsite personnel? • Did they receive pre-entry briefing and are their names recorded in field logbook or daily log? • Was the USACE PM made aware of the new personnel. • Required training and medical surveillance documentation received (e.g., 40-hr, 8 hr, etc.)?		X	X X X	
Did personnel sign in/out of site?	X			
Daily tailgate safety meetings conducted and documented?	X			
Were new activities performed today? Were hazards identified, discussed during the daily safety tailgate, and incorporated into revised APP/SSHP?				
New materials brought on site? MSDSs available?		X		
Exclusion (EZ), Contamination Reduction (CRZ), and Support Zones (SZ) delineated and enforced?			X	
General housekeeping measures in place to prevent hazards?	X			
Emergency Planning				
Were there any changes to emergency contact names, telephone numbers, or hospital? If so, were site personnel made aware and was information distributed/reposted.		X		
Adequate safety equipment inventory available?	X			
Fire extinguisher available (monthly inspection of extinguisher will suffice)	X			
Eyewash station(s) functioning and in place (weekly inspection of eye wash station will suffice)?	X			
First aid supplies available (weekly inspection of first aid kit will suffice)?	X			
Communication equipment readily available for emergencies?	X			
Any reported accidents/incidents at this site? If so, were accident reporting procedures followed?			X	
Air Monitoring				
Monitoring equipment specified in SSHP available and in working order? Air monitoring instrumentation for this site includes – check each if required/on site, note deficiencies in comments: • Combustible gas meter • Organic vapor analyzer • Contaminant specific analyzer for benzene (if total organic vapor concentrations exceed 0.5 ppm)			X	
Monitoring equipment calibrated and calibration records			X	

Y = Satisfactory or Yes; N = Unsatisfactory or No, N/A = Not applicable

Rating	Y	N	N/A	Comments/Immediate Corrective Action[1]
available?			X	
Environmental and personnel monitoring performed as specified in SSHP?			X	
PPE				
Proper dermal protection worn by EA and subcontracted employees when handling/ contacting hazardous chemicals or contaminated environmental media?			X	
Required PPE (hard hats, safety boots / shoes, eye protection with side shields, hearing protection) being worn by EA and subcontracted employees?			X	
PPE inspection completed by SSHO?	X			
Drill Rig Operations				
Daily rig inspection completed? Any equipment problems?			X	
Drill rigs/elevated equipment maintaining minimum 10-ft distance from energized (50 kV) overhead power lines?			X	
Investigation-derived Waste (IDW)				
Wastes properly staged, secured, and labeled at end of day?			X	

Additional Comments:

John M. Cole Baca
Site Safety and Health Officer's Signature

1-19-17
Date

[1]If a deficiency is noted that cannot be immediately corrected, the SSHO will monitor the progress in correcting the deficiency and will document following:

- Date the deficiency was identified
- Description of the deficiency
- Name of the person responsible for correcting the deficiency
- Projected date of correction
- Actual date of correction.

Y = Satisfactory or Yes; N = Unsatisfactory or No, N/A = Not applicable

EA ENGINEERING, SCIENCE AND TECHNOLOGY, INC.
SAFETY MEETING REPORT

Date: 1-19-17	Time: 0700	Duration of meeting: 10 min	Project # 62599.0101
Location:		Task: INSTALLING CONDUIT, UNISTRUT WIRING-	

Type of meeting: X Daily ___ Weekly ___ Monthly ___ Other: _____

Items/Issues discussed:

1. COFFE
2. FALL PROTECTION
3. LIFT INSPECTION
4. LIFT TIE OFF
5. Double LANYARD TIE-OFF
6. BURN PERMIT (HOT WORK)
7)

Attach minutes of safety meeting if taken.

Safety questions/issues raised:	Actions/Follow-up needed:
1. NONE	
2.	
3.	
4.	
5.	
6.	

Remarks:

Meeting conducted by:

JOHN CODE BACA

HEALTH AND SAFETY ACTIVITY REPORT

Site: BULK FUELS FACILITY EXPANSION Location: KAFB BLDG 19150

Weather Cond.: CLEAR, COOL Onsite Hours: From 0700 To 1530

Changes in PPE Levels[1]	Work Operations	Reasons for Change
NONE		

Site Safety and Health Plan Violations	Corrective Action Specified	Corrective Action Taken[2] (yes/no)
NO VIOLATIONS		

Observations and Comments:

Completed by: JOHN CORBACA Date: 1-19-17
Site Health and Safety Supervisor

[1]Only SSHO may change PPE levels, using only criteria specified in APP/SSHP.
[2]If a deficiency is noted that cannot be immediately corrected, the SSHO will monitor the progress in correcting the deficiency and will document following:

- Date the deficiency was identified
- Description of the deficiency
- Name of the person responsible for correcting the deficiency
- Projected date of correction
- Actual date of correction.

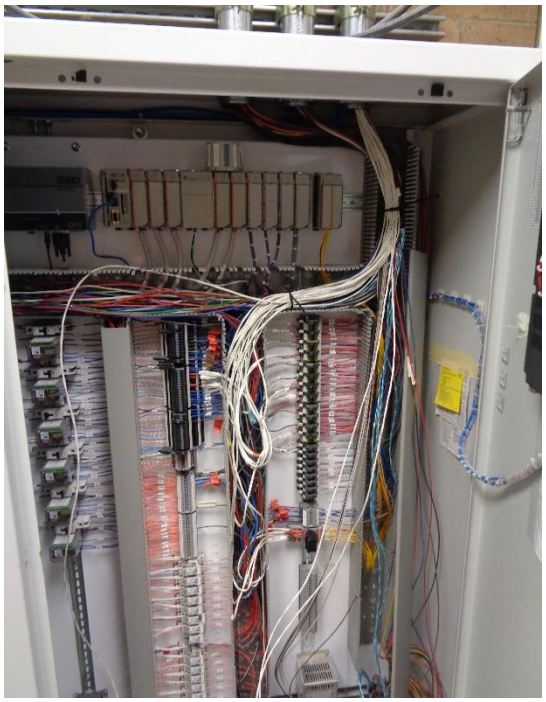

Location: Control Room
Description: Newly Installed PLC Components (Bottom Right)
Date: 19 January 2017 Direction: South

Location: Existing Influent Tank
Description: Newly Installed Conduit to New Level Transducer
Date: 19 January 2017 Direction: North

Location: Newly Installed Influent Skid
Description: Completed Wiring Pressure Transmitters
Date: 19 January 2017 Direction: West

Location: Effluent Pipe Tree
Description: Completed Wiring Pressure Transmitters
Date: 19 January 2017 Direction: Southwest

Location: Newly Installed Effluent Skid
Description: Completed Wiring Pressure Switch
Date: 19 January 2017 Direction: Northeast

Location: Newly Installed Effluent Tank
Description: Newly Installed Sight Glass
Date: 19 January 2017 Direction: West

Location: Existing Effluent Tank
Description: Newly Installed Sight Glass
Date: 19 January 2017 Direction: South

Location: Eastern Newly Installed GAC Vessel
Description: Partially Installed Grounding Wire
Date: 19 January 2017 Direction: Down

Location: Existing Influent Tank
Description: Newly Installed Sight Glass
Date: 19 January 2017 Direction: North

Location: Existing Effluent Tank
Description: Moved Level Transducer Nearer to Conduit and Partially Installed Conduit.
Date: 19 January 2017 Direction: South

DAILY REPORT

(ATTACH ADDITIONAL SHEETS IF NECESSARY)

CONTRACT NAME:	Kirtland AFB Bulk Fuels Facility Expansion of Dissolved Plume GWTS Design	REPORT NO:	060
CONTRACT NUMBER:	W912DR-12-D-0006	REPORT DATE:	20 JAN 17
REVISION NUMBER:	-	REVISION DATE:	-
TASK ORDER NUMBER:	DM01	PROJECT NAME / LOCATION:	KAFB, ABQ, NM
PROJECT NUMBER:	62599DM01	PROJECT DESCRIPTION:	KAFB GWTS Expansion
PROJECT MANAGER:	Devon Jercinovic	FIELD QUALITY MANAGER:	Kevin McKeage
CONSTRUCTION MANAGER:	Lucas Rief	SITE SAFETY MANAGER:	John Cde Baca

AM WEATHER:	Cloudy cool	PM WEATHER:	Cloudy cool	MAX TEMP (F):	440		

SUMMARY OF WORK PERFORMED TODAY

Hydrostatic/Leak Testing, Completing Existing Effluent tank conduit, attached final grounding cable, Uploaded new HMI Program, Pump Run, Determined Pump motor direction, completed hose racks, removed wooden blocks from skids.

HEALTH AND SAFETY REPORT

SAFETY ACTIONS TAKEN TODAY/SAFETY INSPECTIONS CONDUCTED (Include Observations, Safety Violations, Corrective Instructions Given, Corrective Actions Taken, and Results of Safety Inspections Conducted: Removed Guardless grinder from site.

Visual observation, Chuneca HVAC assessors were directed to put on appropriate PPE, but left in stead.

TAILGATE TOPICS:

Lift Safety, PPE, Ladder use, Hand tool safety, Grinder guard, Hot Work.

SAFE BEHAVIOR OBSERVATIONS/SELF-ASSESSMENTS:

Safe behavior observed.

OPERATIONS/PRODUCTION REPORT

WORK FORCE – CONTRACTOR AND SUBCONTRACTOR

Company	Cumulative Total of Work Hours From Previous Report	Total Hours Today	Total Work Hours From Start of Injection Event
Techsas	316	5	321
Rupert	559	12	571
Wilson	306	4	310
I+C Solutions	103	18	121
Ultra Painting	105	3	108

EQUIPMENT ON HAND

Description of Equipment	Make/Model/ Manufacturer	Equipment ID Number	Inspection Performed By
Man lift #1	Genie GS-1930		Jonathan Freeman

COMMENTS (acceptance status, inspection findings, etc.):

OK

WORK AND/OR TESTS ACCOMPLISHED OR IN PROGRESS

Performed Work/Test for Today: Hydrostatic/Leak Testing, Conduit installed, grounding cable installed, Uploaded new HMI Program, Determined Pump Motor Direction, completed hose racks, and removed wooden blocks from skids.

Planned Work/Test for Tomorrow:

None

Planned Work/Test for Next Week:

Shakedown Testing and additional Programming.

CHANGED CONDITIONS/DELAY/CONFLICTS ENCOUNTERED (List any conflicts with the project [i.e., scope of work and/or drawings], delays to the project attributable to site and weather conditions, etc. None

VISITORS AND DISCUSSIONS: Cherega arrived to inspect vent louvre, but left as a result of PPE requirements.

QUALITY CONTROL REPORT

MATERIALS DELIVERED TO JOB SITE

Quantity/Volume/ Weight	Description of Materials Received	Make/Model/ Manufacturer	Material Lot Number	Inspection Performed By
1	Totalizer Display	2706-Point Inview x2-SC		KM

COMMENTS (acceptance status, inspection findings, etc.): OK

INSPECTIONS PERFORMED

Task/Activity Inspected	Inspection Performed	Findings
Conduit, Grounding, hose rack Install inspection	Visual Inspection	OK
HMI Upload, Pump rotation and block removal	Visual Inspection	OK

TESTS PERFORMED

Task/Activity Tested	Test Performed	Test Results (Pass/Fail) - Criteria
Leak/Hydrostatic Testing	Performed 3 tests, see attached forms.	Passed, Effluent line see notes.

QUALITY ISSUES AND RESOLUTIONS: None

SUBMITTALS INSPECTION / REVIEW

Submittal No.	Submittal Description	Specification/Plan Reference	Submittal Approved?		Comment/Reason/Action
NA	Daily Report	–	Yes ☐	No ☐	Pending
NA	SBO	–	Yes ☐	No ☐	Pending
NA	PTSP	–	Yes ☐	No ☐	Pending

REGULATORY COMPLIANCE REPORT							
PERMIT INSPECTIONS PERFORMED: None							
WASTE ACCUMULATION/STOCKPILE AREA INSPECTION							
Inspection Performed By:	NA			Signature of Inspector:			
Accumulation / Stockpile Area Inspected:							
No of Bins:		No of Tankers		No of Roll-Off Boxes:		No. of Tanks	
Inspection Results: NA							
GENERAL COMMENTS							
General Comments: (rework, directives, etc.): OK							
ATTACHMENTS							
List of Attachments: (examples, as applicable: submittals, meeting minutes, safety meeting minutes, COCs, weight tickets, manifests, profiles, rework item list, RFIs, DCNs, photographs, etc.): Hydrostatic / leak testing forms, Photolog, and Safety Documentation							
NOTE: Write all entries legibly in ink. Line out all unused portions or designate as "not applicable". Preparer signs first and last name on each completed daily report. This form may be filled out electronically and signed electronically.				PREPARER'S SIGNATURE		DATE: 01/20/17	

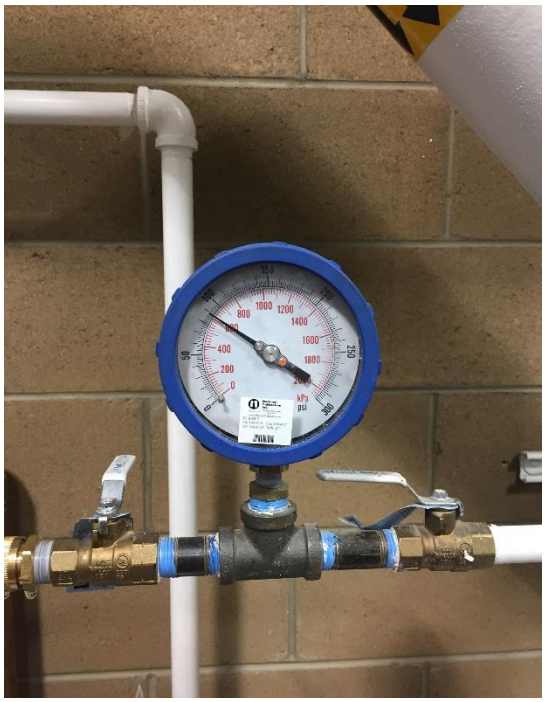

Location: Effluent Pipe Tree
Description: Pressure Reading at the End of Hydrostatic/Leak Testing
Date: 20 January 2017 Direction: West

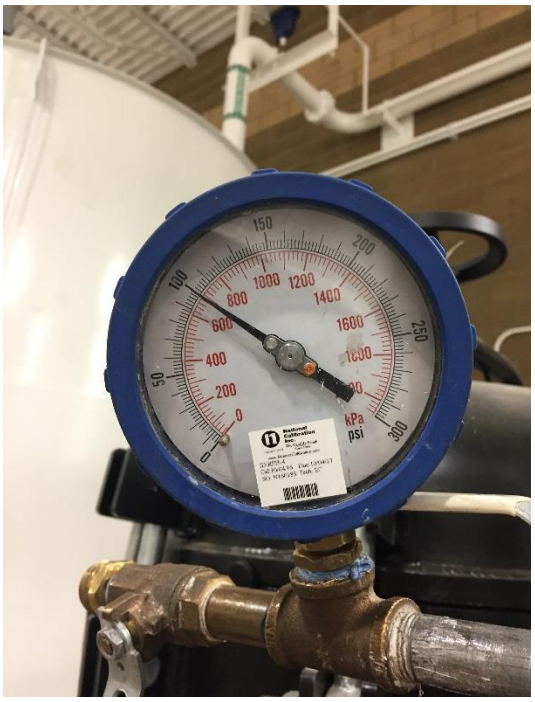

Location: Pipe Running from the Newly Installed Influent Pump Skid to the GAC Pipe Tree
Description: Pressure Reading at the End of Hydrostatic/Leak Testing
Date: 20 January 2017 Direction: Northwest

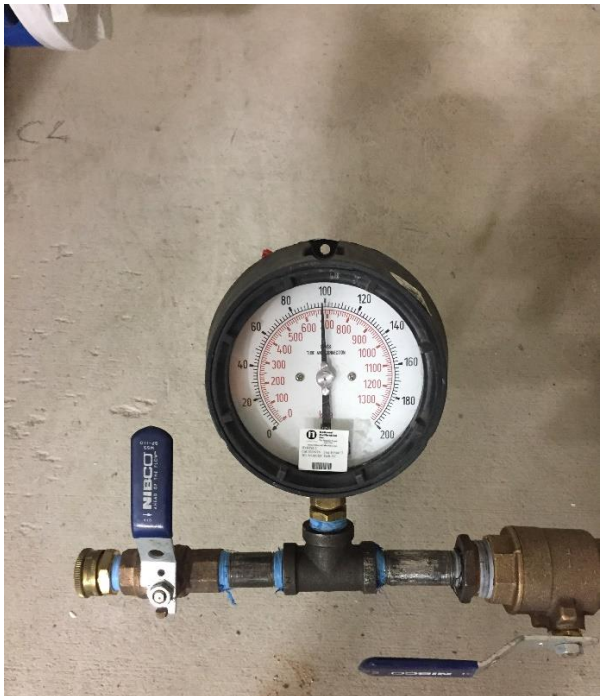

Location: Pipe Running to the Newly Installed Influent Tank
Description: Pressure Reading at the End of Hydrostatic/Leak Testing
Date: 20 January 2017 Direction: Down

Location: Existing Effluent Pipe Tree
Description: Completed Conduit to Level Transducer
Date: 20 January 2017 Direction: South

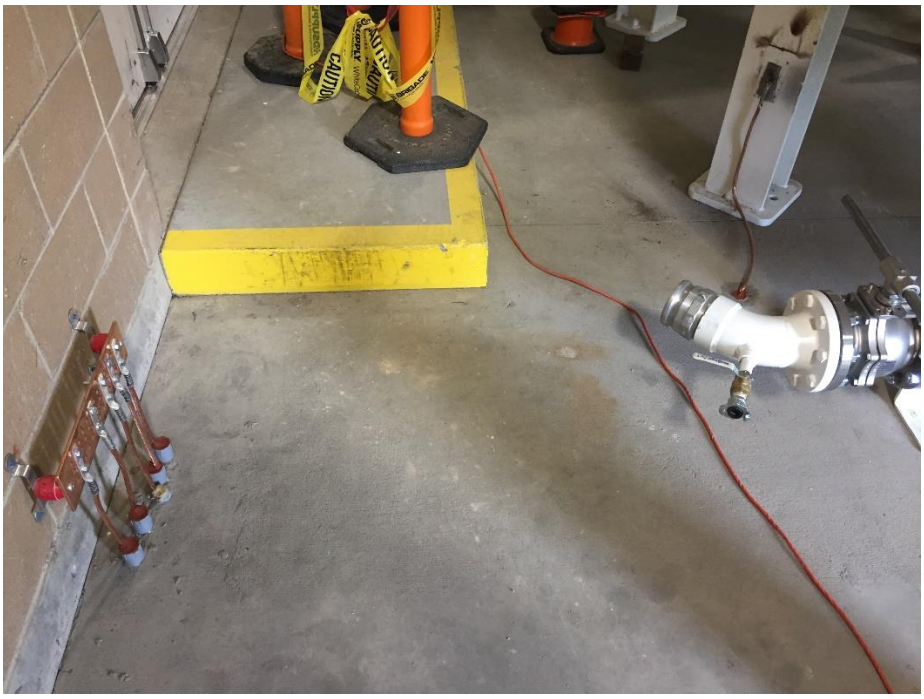

Location: Newly Installed GAC Vessel
Description: Completed Grounding Wire
Date: 20 January 2017 Direction: Down

Location: West Wall
Description: Completed Hose Rack
Date: 20 January 2017 Direction: West

Location: West Wall
Description: Completed Hose Rack
Date: 20 January 2017 Direction: West

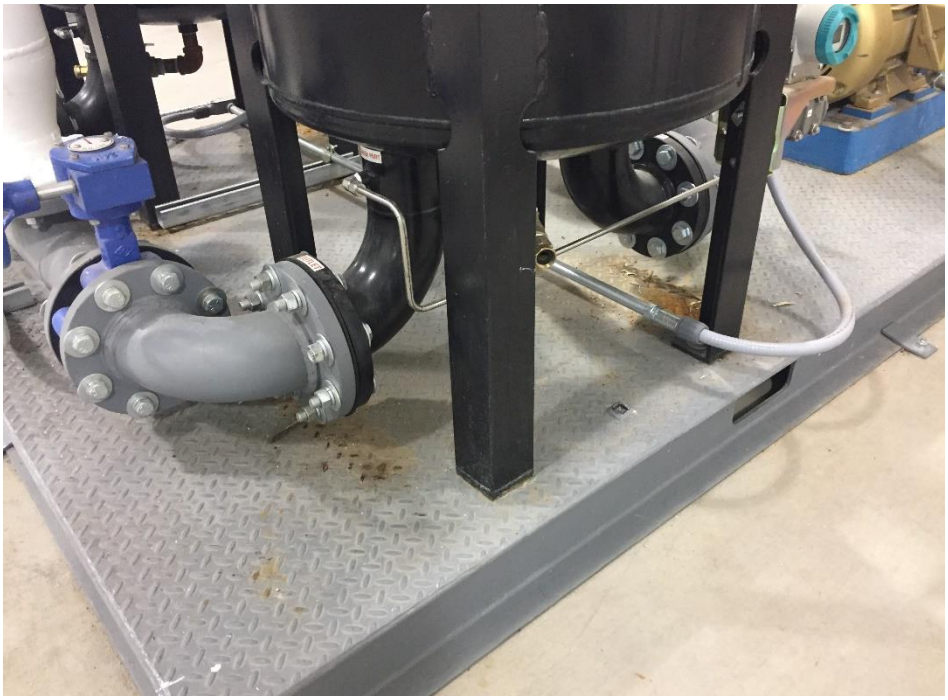

Location: Existing Influent Pump Skid
Description: Removed Wooden Supports
Date: 20 January 2017 Direction: Down

Location: Existing Influent Pump Skid
Description: Removed Wooden Supports
Date: 20 January 2017 Direction: Down

Location: Existing Effluent Pump Skid
Description: Removed Wooden Supports
Date: 20 January 2017 Direction: Down

Location: Existing Effluent Pump Skid
Description: Removed Wooden Supports
Date: 20 January 2017 Direction: Down

Location: Newly Installed Influent Pump Skid
Description: Checked Pump Motor Directions
Date: 20 January 2017 Direction: Down

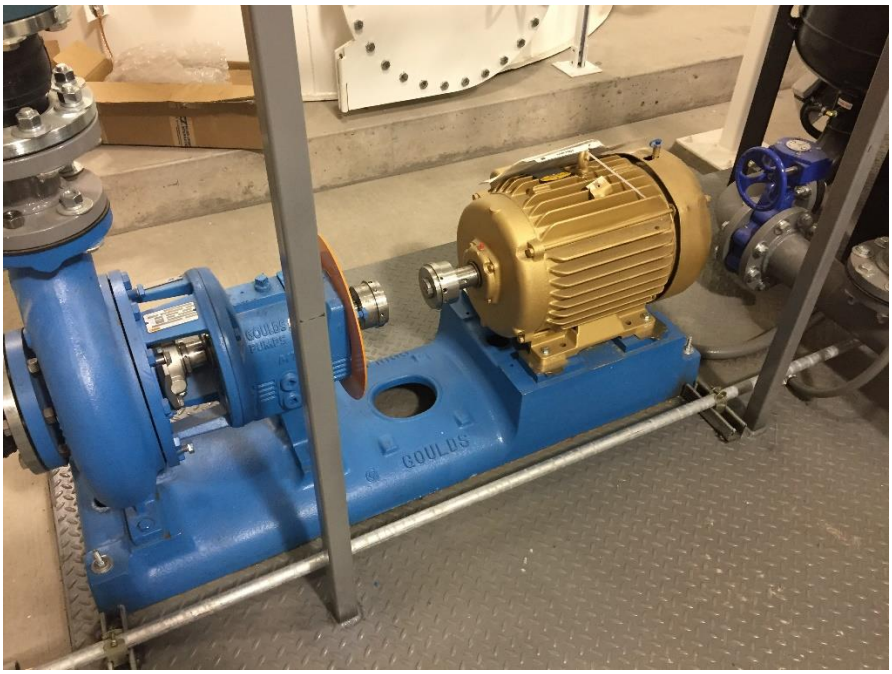

Location: Newly Installed Effluent Pump Skid
Description: Checked Pump Motor Directions
Date: 20 January 2017 Direction: Down

Location: Existing Effluent Pump Skid
Description: Removed Excess Conduit
Date: 20 January 2017 Direction: Down

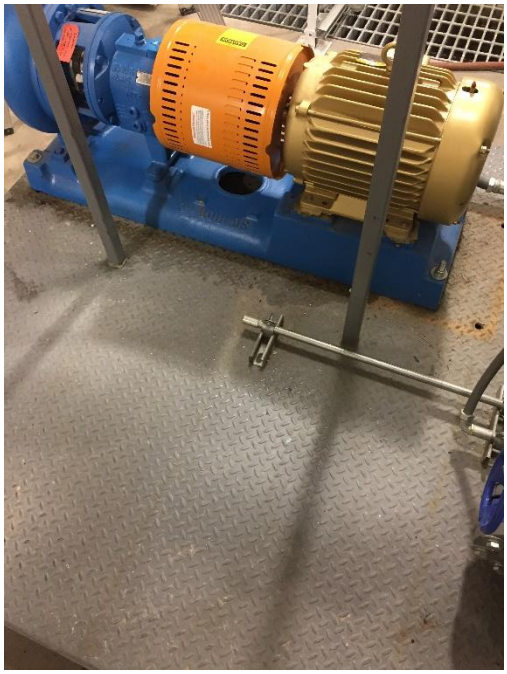

Location: Existing Effluent Pump Skid
Description: Removed and Disconnected V-Cone Flowmeter
Date: 20 January 2017 Direction: Down

Location: Above Control Room Door
Description: Installed Totalizer Display
Date: 20 January 2017 Direction: East

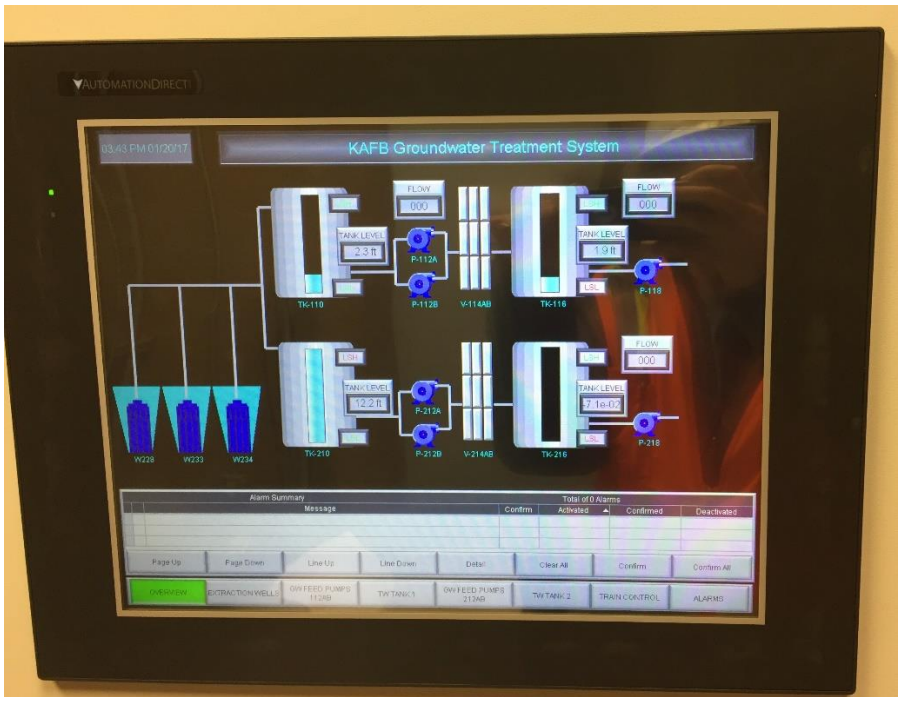

Location: Control Room
Description: Overview Screen for Newly Uploaded HMI Programming
Date: 20 January 2017 Direction: South

Location: Existing Influent Tank
Description: Installed Sight Glass
Date: 20 January 2017 Direction: Down

TECHSAS Incorporated

Hydrostatic Test Data Report - 01

Line Description: 6" Line from Inlet Bag Filter Skid to Carbon Vessels

Date: 1/20/17 Start Time: 8:38 End Time: 10:38 Volume of Water: 224.76

Length of Pipe: 153' Start Pressure: 100 End Pressure: Pass X Fail___

Pressure Readings:

+15 Min	100	+75 Min	100
+30 Min	100	+90 Min	100
+45 Min	100	+105 Min	100
+60 Min	100	+120 Min	100

Average Test Pressure 100

Water Added? Y___ N X

Allowable volume of water per hour _____ G

Actual Volume of water added _____ G

Number of Joints in the length of piping tested 12

L = Cf x N x D x P0.5 where:

L = allowable leakage in gallons per hour

Cf = 0.0001351

N = number of joints in the length of piping tested

D = nominal pipe diameter

P = average test pressure in psig

Certified by: Luke Rief

Organization EA

Signature Luke Rief

Notes: No leaks observed.

TECHSAS Incorporated

Hydrostatic Test Data Report - 02

Line Description: Feed Pipe to Inlet Bag Filter Skids

Date: 1/26/17 Start Time: 8:38 End Time: 10:38 Volume of Water: 77.86

Length of Pipe: 53' Start Pressure: 100 End Pressure: ~~100~~ 99 Pass X Fail ___

Pressure Readings:

+15 Min	99	+75 Min	99
+30 Min	99	+90 Min	99
+45 Min	99	+105 Min	99
+60 Min	99	+120 Min	99

Water Added? Y ___ N X Average Pressure 99

Allowable volume of water per hour _____ G

Actual Volume of water added _____ G

Number of Joints in the length of piping tested 11

L = Cf x N x D x P0.5 where:

L = allowable leakage in gallons per hour

Cf = 0.0001351

N = number of joints in the length of piping tested

D = nominal pipe diameter

P = average test pressure in psig

Certified by: Luke Rief

Organization EA

Signature Luke Rief

Notes: No leaks observed.

TECHSAS Incorporated

Hydrostatic Test Data Report - 03

Line Description: Discharge Pipe from Effluent Bag Filter Skids to Discharge

Date: 01/20/17 Start Time: 0953 End Time: 1153 Volume of Water: 86.6

Length of Pipe: 59' Start Pressure: 96 End Pressure: Pass X Fail ___ ← Pipe passes, but effluent valve failed.

Pressure Readings:

+15 Min	80, +Water to 96	+75 Min	82, +Water to 96
+30 Min	79, +Water to 96	+90 Min	78, +Water to 96
+45 Min	80, +Water to 96	+105 Min	82, +Water to 96
+60 Min	79, +Water to 96	+120 Min	79, +Water to 96

Average Test Pressure 88

Water Added? Y ✓ N ___

Allowable volume of water per hour 0.7 G

Actual Volume of water added 770.7 G

Number of Joints in the length of piping tested 9

L = Cf x N x D x P0.5 where:

L = allowable leakage in gallons per hour

Cf = 0.0001351

N = number of joints in the length of piping tested

D = nominal pipe diameter

P = average test pressure in psig

Certified by: Luke Riel

Organization EA

Signature [signature]

Notes: Pressure drop observed for this length of pipe. Pressure drop is associated with effluent christmas tree valve not seating correctly. Attempted to seat the valve and began test. Pressure test on valve is not critical. no leak observed in pipe during 2 hour test. Water added each 15 minutes to keep pressure on pipe.

EA Engineering, Science, and Technology, Inc.

DAILY SAFETY INSPECTION CHECKLIST (TO BE COMPLETED EACH DAY OF CONSTRUCTION OR HTRW SITE ACTIVITIES)

Site: BULK FUELS FACILITY EXPANSION
Location: KAFB BLDG 19150
Project No.: 62599 DM01
Client: US ARMY CORP OF ENGINEERS

Prepared by SSHO: JOHN CAEBACA
Project Manager: DEVON JERCINOVIC
Date : 1-20-17

Rating	Y	N	N/A	Comments/Immediate Corrective Action[1]
Accident Prevention Plan (APP) and Site Safety and Health Plan (SSHP) General Requirements				
Are there new onsite personnel? • Did they receive pre-entry briefing and are their names recorded in field logbook or daily log? • Was the USACE PM made aware of the new personnel. • Required training and medical surveillance documentation received (e.g., 40-hr, 8 hr, etc.)?		X	X X X	
Did personnel sign in/out of site?	X			
Daily tailgate safety meetings conducted and documented?	X			
Were new activities performed today? Were hazards identified, discussed during the daily safety tailgate, and incorporated into revised APP/SSHP?		X		
New materials brought on site? MSDSs available?		X		
Exclusion (EZ), Contamination Reduction (CRZ), and Support Zones (SZ) delineated and enforced?			X	
General housekeeping measures in place to prevent hazards?	X			
Emergency Planning				
Were there any changes to emergency contact names, telephone numbers, or hospital? If so, were site personnel made aware and was information distributed/reposted.		X		
Adequate safety equipment inventory available?	X			
Fire extinguisher available (monthly inspection of extinguisher will suffice)	X			
Eyewash station(s) functioning and in place (weekly inspection of eye wash station will suffice)?	X			
First aid supplies available (weekly inspection of first aid kit will suffice)?	X			
Communication equipment readily available for emergencies?	X			
Any reported accidents/incidents at this site? If so, were accident reporting procedures followed?				
Air Monitoring				
Monitoring equipment specified in SSHP available and in working order? Air monitoring instrumentation for this site includes – check each if required/on site, note deficiencies in comments: • Combustible gas meter • Organic vapor analyzer • Contaminant specific analyzer for benzene (if total organic vapor concentrations exceed 0.5 ppm)			X	
Monitoring equipment calibrated and calibration records			X	

Y = Satisfactory or Yes; N = Unsatisfactory or No, N/A = Not applicable

Rating	Y	N	N/A	Comments/Immediate Corrective Action[1]
available?			X	
Environmental and personnel monitoring performed as specified in SSHP?			X	
PPE				
Proper dermal protection worn by EA and subcontracted employees when handling/ contacting hazardous chemicals or contaminated environmental media?			X	
Required PPE (hard hats, safety boots / shoes, eye protection with side shields, hearing protection) being worn by EA and subcontracted employees?	X			
PPE inspection completed by SSHO?	X			
Drill Rig Operations				
Daily rig inspection completed? Any equipment problems?			X	
Drill rigs/elevated equipment maintaining minimum 10-ft distance from energized (50 kV) overhead power lines?			X	
Investigation-derived Waste (IDW)				
Wastes properly staged, secured, and labeled at end of day?			X	
Additional Comments:				

John M. DeBacca
Site Safety and Health Officer's Signature

1-20-17
Date

[1]If a deficiency is noted that cannot be immediately corrected, the SSHO will monitor the progress in correcting the deficiency and will document following:

- Date the deficiency was identified
- Description of the deficiency
- Name of the person responsible for correcting the deficiency
- Projected date of correction
- Actual date of correction.

Y = Satisfactory or Yes; N = Unsatisfactory or No, N/A = Not applicable

EA ENGINEERING, SCIENCE AND TECHNOLOGY, INC.
SAFETY MEETING REPORT

Date: 1-20-17	Time: 0700	Duration of meeting: 10min	Project # 62599.0101
Location: KAFB BLDG 19150		Task: PAINTING, CONDUIT INSTALL, HYDRO TESTING, WIRE PULLING	

Type of meeting: X Daily ___ Weekly ___ Monthly ___ Other: _____

Items/Issues discussed:

1. DOUBLE LANYARD TIE-OFF
2. LIFT INSPECTION
3. PPE
4. TIE OFF IN LIFT
5. LADDER USE
6. HAND TOOL SAFETY
7. GRINDER GUARD
8. HOT WORK PERMIT

Attach minutes of safety meeting if taken.

Safety questions/issues raised:	Actions/Follow-up needed:
1. NONE	
2.	
3.	
4.	
5.	
6.	

Remarks:

Meeting conducted by:

JOHN CDE BACA

HEALTH AND SAFETY ACTIVITY REPORT

Site: BULK FUELS FACILITY EXPANSION Location: KAFB BLDG 19150

Weather Cond.: PARTLY CLOUDY, COOL Onsite Hours: From 0700 To 1600

Changes in PPE Levels[1]	Work Operations	Reasons for Change
NO CHANGES		

Site Safety and Health Plan Violations	Corrective Action Specified	Corrective Action Taken[2] (yes/no)
NO SAFETY VIOLATIONS		

Observations and Comments:

WORKER ATTEMPTED TO USE GRINDER W/O A GUARD. WORKER REMOVED THE GRINDER FROM THE SITE.

Completed by: JOHN CODE BACA Date: 1-20-17
Site Health and Safety Supervisor

[1]Only SSHO may change PPE levels, using only criteria specified in APP/SSHP.
[2]If a deficiency is noted that cannot be immediately corrected, the SSHO will monitor the progress in correcting the deficiency and will document following:

- Date the deficiency was identified
- Description of the deficiency
- Name of the person responsible for correcting the deficiency
- Projected date of correction
- Actual date of correction.

DAILY REPORT

(ATTACH ADDITIONAL SHEETS IF NECESSARY)

CONTRACT NAME:	Kirtland AFB Bulk Fuels Facility Expansion of Dissolved Plume GWTS Design	REPORT NO:	061
CONTRACT NUMBER:	W912DR-12-D-0006	REPORT DATE:	23JAN16
REVISION NUMBER:	-	REVISION DATE:	-
TASK ORDER NUMBER:	DM01	PROJECT NAME / LOCATION:	KAFB, ABQ, NM
PROJECT NUMBER:	62599DM01	PROJECT DESCRIPTION:	KAFB GWTS Expansion
PROJECT MANAGER:	Devon Jercinovic	FIELD QUALITY MANAGER:	Kevin McKease
CONSTRUCTION MANAGER:	None	SITE SAFETY MANAGER:	Pete Ferrari

AM WEATHER:	Cool, partly cloudy	PM WEATHER:	Windy, cool, partly cloudy	MAX TEMP (F):	51°		

SUMMARY OF WORK PERFORMED TODAY

Assembling pumps on newly installed skids, HMI programming, installing GAC pressure switch and various fittings on the newly installed skids. Reinstalled sight tubes.

HEALTH AND SAFETY REPORT

SAFETY ACTIONS TAKEN TODAY/SAFETY INSPECTIONS CONDUCTED (Include Observations, Safety Violations, Corrective Instructions Given, Corrective Actions Taken, and Results of Safety Inspections Conducted:

Visual Observation, no violations

TAILGATE TOPICS:

Slips, trips, and falls, hand tool safety.

SAFE BEHAVIOR OBSERVATIONS/SELF-ASSESSMENTS:

Safe behavior observed

OPERATIONS/PRODUCTION REPORT

WORK FORCE – CONTRACTOR AND SUBCONTRACTOR

Company	Cumulative Total of Work Hours From Previous Report	Total Hours Today	Total Work Hours From Start of Injection Event
Techsas	321	6	327
I+C Solutions	121	16	137

EQUIPMENT ON HAND

Description of Equipment	Make/Model/ Manufacturer	Equipment ID Number	Inspection Performed By
None			

COMMENTS (acceptance status, inspection findings, etc.):

OK

WORK AND/OR TESTS ACCOMPLISHED OR IN PROGRESS

Performed Work/Test for Today: Assembled pumps, HMI programming, installed GAC pressure switch and various skid fittings. Reinstalled sight tubes.

Planned Work/Test for Tomorrow:

Continue shakedown testing of HMI programming.

Planned Work/Test for Next Week:

Finalize Construction and Pre Final meetings.

CHANGED CONDITIONS/DELAY/CONFLICTS ENCOUNTERED (List any conflicts with the project [i.e., scope of work and/or drawings], delays to the project attributable to site and weather conditions, etc. The pressure switch on the influent skid leaked during testing it will need to be reinstalled.

VISITORS AND DISCUSSIONS:
Trent Snyder and Scott Clark gave a tour today.

QUALITY CONTROL REPORT

MATERIALS DELIVERED TO JOB SITE

Quantity/Volume/ Weight	Description of Materials Received	Make/Model/ Manufacturer	Material Lot Number	Inspection Performed By
Various	Sight Glass/Tube components			KM
Various	Pump skid fittings			

COMMENTS (acceptance status, inspection findings, etc.): OK

INSPECTIONS PERFORMED

Task/Activity Inspected	Inspection Performed	Findings
Pump Assembly and HMI programming	Visual Inspection	OK
Installed switch and fittings	Visual Inspection	OK

TESTS PERFORMED

Task/Activity Tested	Test Performed	Test Results (Pass/Fail) - Criteria
None		

QUALITY ISSUES AND RESOLUTIONS: None

SUBMITTALS INSPECTION / REVIEW

Submittal No.	Submittal Description	Specification/Plan Reference	Submittal Approved?		Comment/Reason/Action
NA	Daily Report	–	Yes ☐	No ☐	Pending
NA	SBO	–	Yes ☐	No ☐	Pending
NA	PTSP	–	Yes ☐	No ☐	Pending

REGULATORY COMPLIANCE REPORT							
PERMIT INSPECTIONS PERFORMED: None							
WASTE ACCUMULATION/STOCKPILE AREA INSPECTION							
Inspection Performed By:	NA			Signature of Inspector:			
Accumulation / Stockpile Area Inspected:							
No of Bins:		No of Tankers		No of Roll-Off Boxes:		No. of Tanks	
Inspection Results: NA							
GENERAL COMMENTS							
General Comments: (rework, directives, etc.):							
ATTACHMENTS							
List of Attachments: (examples, as applicable: submittals, meeting minutes, safety meeting minutes, COCs, weight tickets, manifests, profiles, rework item list, RFIs, DCNs, photographs, etc.): Photo log and safety documentation.							
NOTE: Write all entries legibly in ink. Line out all unused portions or designate as "not applicable". Preparer signs first and last name on each completed daily report. This form may be filled out electronically and signed electronically.				PREPARER'S SIGNATURE		DATE: 23 JAN 16	

Location: Well Control Hosue
Description: Tested Communications Between the Well Control House and the GWTS.
Date: 23 January 2017 Direction: South

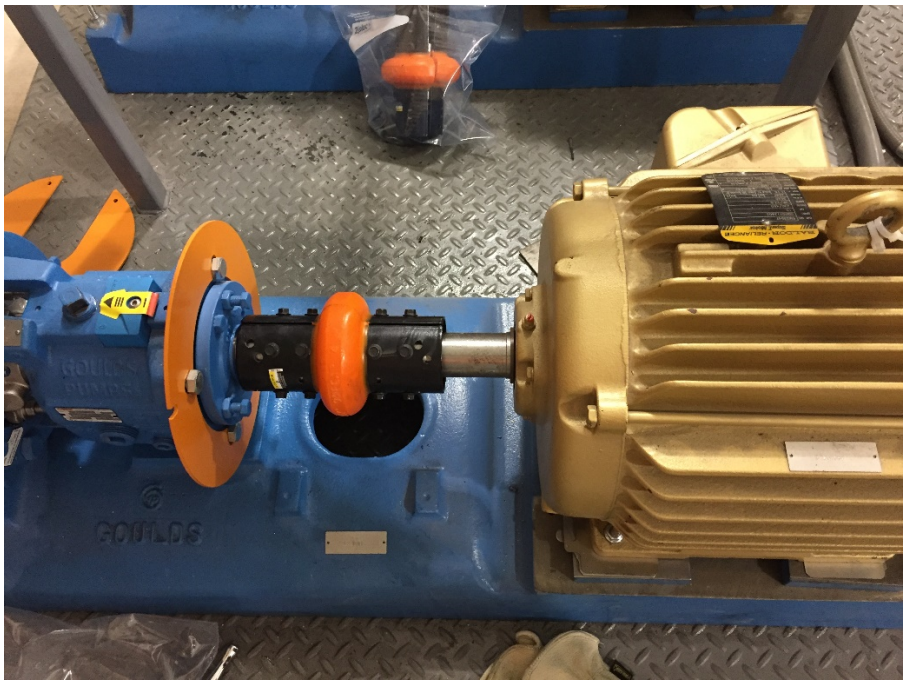

Location: Newly Installed Influent Pump Skid
Description: Coupled Motors to Pump Assemblies
Date: 23 January 2017 Direction: Down

Location: Floor Near Newly Installed Influent Skid
Description: Various Pump Skid Fittings and Sight Glass Components
Date: 23 January 2017 Direction: Down

Location: Above the Control Room Door
Description: Established Communication With the Totalizer Display and Began Programming
Date: 23 January 2017 Direction: East

Location: Newly Installed Influent Pump Skid
Description: Completed Pump Assembly
Date: 23 January 2017 Direction: Southwest

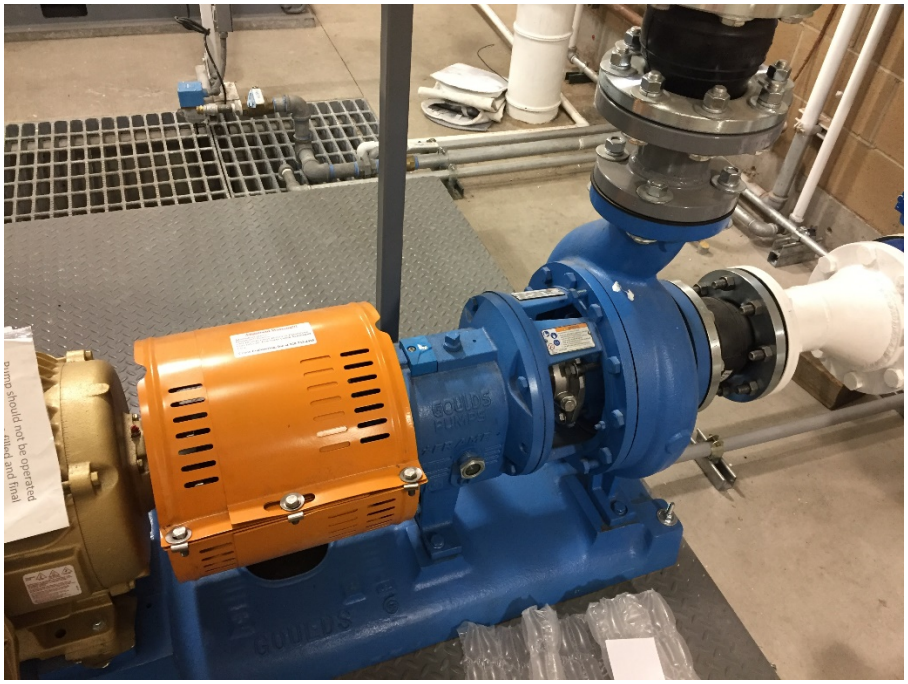

Location: Newly Installed Effluent Skid
Description: Completed Pump Assembly
Date: 23 January 2017 Direction: South

Location: Newly Installed GAC Vessel Tree
Description: Completed Installation of Pressure Switch
Date: 23 January 2017 Direction: South

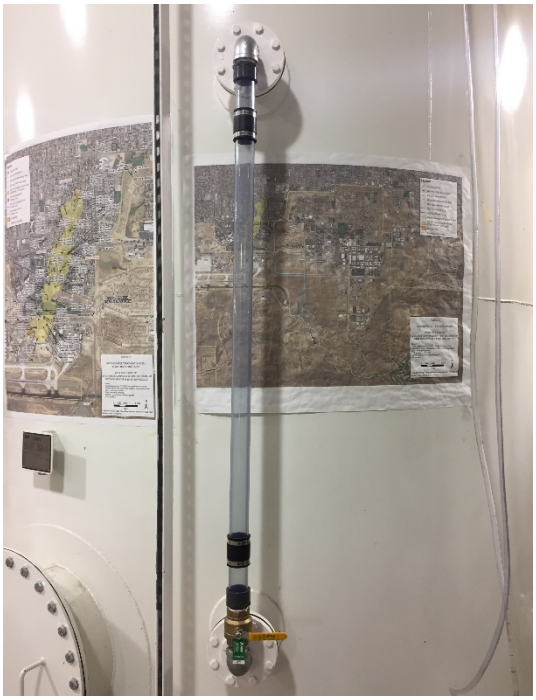

Location: Existing Influent Tank
Description: Reinstalled Sight Tube
Date: 23 January 2017 Direction: North

Location: Newly Installed Influent Tank
Description: Reinstalled Sight Tube
Date: 23 January 2017 Direction: North

Location: Newly Installed Influent Pump Skid
Description: Added Vent Line and Bag Filter Handles
Date: 23 January 2017 Direction: East

Location: Newly Installed Influent Pump Skid
Description: Installed Drain Line
Date: 23 January 2017 Direction: Down

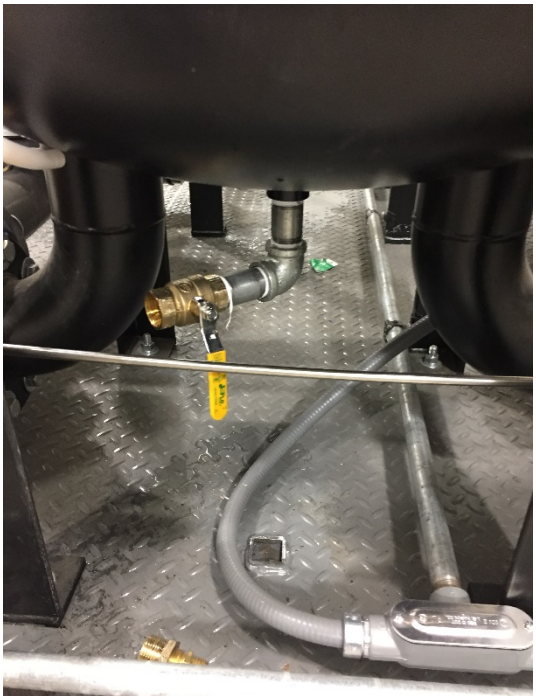

Location: Newly Installed Influent Pump Skid
Description: Installed Drain Line
Date: 23 January 2017 Direction: Down

Location: Newly Installed Effluent Pump Skid
Description: Installed Pressure Gauge and Sampling Port
Date: 23 January 2017 Direction: Northwest

EA Engineering, Science, and Technology, Inc.

DAILY SAFETY INSPECTION CHECKLIST
(TO BE COMPLETED EACH DAY OF CONSTRUCTION OR HTRW SITE ACTIVITIES)

Site: Bulk Fuels Facility Expansion
Location: KAFB BLDG 19150
Project No.: 625991DM01
Client: USACE

Prepared by SSHO: Pete Ferrari
Project Manager: Dawn Derrington
Date: 1-23-2017

Rating	Y	N	N/A	Comments/Immediate Corrective Action[1]
Accident Prevention Plan (APP) and Site Safety and Health Plan (SSHP) General Requirements				
Are there new onsite personnel? • Did they receive pre-entry briefing and are their names recorded in field logbook or daily log? • Was the USACE PM made aware of the new personnel. • Required training and medical surveillance documentation received (e.g., 40-hr, 8 hr, etc.)?	✓	✓		
Did personnel sign in/out of site?	✓			
Daily tailgate safety meetings conducted and documented?	✓			
Were new activities performed today? Were hazards identified, discussed during the daily safety tailgate, and incorporated into revised APP/SSHP?		✓		
New materials brought on site? MSDSs available?				
Exclusion (EZ), Contamination Reduction (CRZ), and Support Zones (SZ) delineated and enforced?			✓	
General housekeeping measures in place to prevent hazards?	✓			
Emergency Planning				
Were there any changes to emergency contact names, telephone numbers, or hospital? If so, were site personnel made aware and was information distributed/reposted.		✓		
Adequate safety equipment inventory available?	✓			
Fire extinguisher available (monthly inspection of extinguisher will suffice)	✓			
Eyewash station(s) functioning and in place (weekly inspection of eye wash station will suffice)?	✓			
First aid supplies available (weekly inspection of first aid kit will suffice)?	✓			
Communication equipment readily available for emergencies?	✓			
Any reported accidents/incidents at this site? If so, were accident reporting procedures followed?		✓		
Air Monitoring				
Monitoring equipment specified in SSHP available and in working order? Air monitoring instrumentation for this site includes – check each if required/on site, note deficiencies in comments: • Combustible gas meter • Organic vapor analyzer • Contaminant specific analyzer for benzene (if total organic vapor concentrations exceed 0.5 ppm)			✓	
Monitoring equipment calibrated and calibration records			✓	

Y = Satisfactory or Yes; N = Unsatisfactory or No, N/A = Not applicable

Rating	Y	N	N/A	Comments/Immediate Corrective Action[1]
available?			✓	
Environmental and personnel monitoring performed as specified in SSHP?			✓	
PPE				
Proper dermal protection worn by EA and subcontracted employees when handling/ contacting hazardous chemicals or contaminated environmental media?	✓			
Required PPE (hard hats, safety boots / shoes, eye protection with side shields, hearing protection) being worn by EA and subcontracted employees?	✓			
PPE inspection completed by SSHO?	✓			
Drill Rig Operations				
Daily rig inspection completed? Any equipment problems?			✓	
Drill rigs/elevated equipment maintaining minimum 10-ft distance from energized (50 kV) overhead power lines?			✓	
Investigation-derived Waste (IDW)				
Wastes properly staged, secured, and labeled at end of day?			✓	

Additional Comments:

Site Safety and Health Officer's Signature

1/23/2017
Date

[1]If a deficiency is noted that cannot be immediately corrected, the SSHO will monitor the progress in correcting the deficiency and will document following:

- Date the deficiency was identified
- Description of the deficiency
- Name of the person responsible for correcting the deficiency
- Projected date of correction
- Actual date of correction.

Y = Satisfactory or Yes; N = Unsatisfactory or No, N/A = Not applicable

EA ENGINEERING, SCIENCE AND TECHNOLOGY, INC.
SAFETY MEETING REPORT

Date: 1-23-17	Time: 0705	Duration of meeting: 5 min	Project #
Location: KAFB BLDG 19150		Task: ~~SAFETY~~ glasses, & lamps on tanks PLC Programming	

Type of meeting: ___ Daily ___ Weekly ___ Monthly ___ Other: _____

Items/Issues discussed:

1. Slip, trip, falls,
2. Hand tool use
3.
4.
5.

Attach minutes of safety meeting if taken.

Safety questions/issues raised:	Actions/Follow-up needed:
1.	
2.	
3.	
4.	
5.	
6.	

Remarks:

Meeting conducted by:

Peter Jensen

HEALTH AND SAFETY ACTIVITY REPORT

Site: Bulk Fuels Facility Expansion Location: KAFB Bldg. 19150

Weather Cond.: Clear, Cool Onsite Hours: From 0700 To 1630

Changes in PPE Levels[1]	Work Operations	Reasons for Change
None		

Site Safety and Health Plan Violations	Corrective Action Specified	Corrective Action Taken[2] (yes/no)
No Violations		

Observations and Comments:

Completed by: Peter Jaramillo 1/23/2017 Date:
Site Health and Safety Supervisor

[1] Only SSHO may change PPE levels, using only criteria specified in APP/SSHP.
[2] If a deficiency is noted that cannot be immediately corrected, the SSHO will monitor the progress in correcting the deficiency and will document following:

- Date the deficiency was identified
- Description of the deficiency
- Name of the person responsible for correcting the deficiency
- Projected date of correction
- Actual date of correction.

DAILY REPORT

(ATTACH ADDITIONAL SHEETS IF NECESSARY)

CONTRACT NAME:	Kirtland AFB Bulk Fuels Facility Expansion of Dissolved Plume GWTS Design	REPORT NO:	062
CONTRACT NUMBER:	W912DR-12-D-0006	REPORT DATE:	24 JAN 2017
REVISION NUMBER:	-	REVISION DATE:	-
TASK ORDER NUMBER:	DM01	PROJECT NAME / LOCATION:	KAFB, ABQ, NM
PROJECT NUMBER:	62599DM01	PROJECT DESCRIPTION:	KAFB GWTS Expansion
PROJECT MANAGER:	Devon Jercinovic	FIELD QUALITY MANAGER:	Kevin McKenzie
CONSTRUCTION MANAGER:	None	SITE SAFETY MANAGER:	Pete Ferrari

AM WEATHER:	Cool, partly cloudy breezy	PM WEATHER:	Cool, Partly Cloudy Breezy	MAX TEMP (F):	40°		

SUMMARY OF WORK PERFORMED TODAY

Installed various effluent skid fittings, reinstalled sight glasses, continued programming; installed hose racks and plant fittings, GAC sample ports, and an ARV drain line.

HEALTH AND SAFETY REPORT

SAFETY ACTIONS TAKEN TODAY/SAFETY INSPECTIONS CONDUCTED (Include Observations, Safety Violations, Corrective Instructions Given, Corrective Actions Taken, and Results of Safety Inspections Conducted:

Visual Observations, No Violations

TAILGATE TOPICS:

Hand tool use, Ladder safety, PPE, etc.

SAFE BEHAVIOR OBSERVATIONS/SELF-ASSESSMENTS:

Safe behavior observed.

OPERATIONS/PRODUCTION REPORT

WORK FORCE – CONTRACTOR AND SUBCONTRACTOR

Company	Cumulative Total of Work Hours From Previous Report	Total Hours Today	Total Work Hours From Start of Injection Event
Techsas	327	9	336
I+C Solutions	137	23	160

EQUIPMENT ON HAND

Description of Equipment	Make/Model/ Manufacturer	Equipment ID Number	Inspection Performed By
None			

COMMENTS (acceptance status, inspection findings, etc.):

OK

WORK AND/OR TESTS ACCOMPLISHED OR IN PROGRESS

Performed Work/Test for Today: Installed skid fittings, sight glasses, hose racks, plant fittings, GAC sampling ports, and an ARV drain line. Continued HMI programming.

Planned Work/Test for Tomorrow:

Continue shakedown testing of HMI programming and splice into Well 7 flowmeter.

Planned Work/Test for Next Week:

Finalize Construction and Pretest Inspections.

CHANGED CONDITIONS/DELAY/CONFLICTS ENCOUNTERED (List any conflicts with the project [i.e., scope of work and/or drawings], delays to the project attributable to site and weather conditions, etc. None

VISITORS AND DISCUSSIONS: Amy arrived on site to inspect items for punchlist creation.

QUALITY CONTROL REPORT

MATERIALS DELIVERED TO JOB SITE

Quantity/Volume/ Weight	Description of Materials Received	Make/Model/ Manufacturer	Material Lot Number	Inspection Performed By
None				

COMMENTS (acceptance status, inspection findings, etc.): None

INSPECTIONS PERFORMED

Task/Activity Inspected	Inspection Performed	Findings
Fittings, Sight glasses, hose racks, sampling ports and ARV drain line.	Visual inspection	OK
HMI Programming.	Visual inspection	OK

TESTS PERFORMED

Task/Activity Tested	Test Performed	Test Results (Pass/Fail) - Criteria
Key Aforce Treatment Train #2 operation.	Tested Operation	Operated Correctly / As intended.

QUALITY ISSUES AND RESOLUTIONS: None

SUBMITTALS INSPECTION / REVIEW

Submittal No.	Submittal Description	Specification/Plan Reference	Submittal Approved?		Comment/Reason/Action
NA	Daily Report	–	Yes ☐	No ☐	Pending
NA	SBO	–	Yes ☐	No ☐	Pending
NA	PTSP	–	Yes ☐	No ☐	Pending

REGULATORY COMPLIANCE REPORT							
PERMIT INSPECTIONS PERFORMED: None							
WASTE ACCUMULATION/STOCKPILE AREA INSPECTION							
Inspection Performed By:	NA			Signature of Inspector:			
Accumulation / Stockpile Area Inspected:							
No of Bins:		No of Tankers		No of Roll-Off Boxes:		No. of Tanks	
Inspection Results: NA							
GENERAL COMMENTS							
General Comments: (rework, directives, etc.):							
ATTACHMENTS							
List of Attachments: (examples, as applicable: submittals, meeting minutes, safety meeting minutes, COCs, weight tickets, manifests, profiles, rework item list, RFIs, DCNs, photographs, etc.): Photo log and Safety Daumentation							
NOTE: Write all entries legibly in ink. Line out all unused portions or designate as "not applicable". Preparer signs first and last name on each completed daily report. This form may be filled out electronically and signed electronically.				PREPARER'S SIGNATURE		DATE: 24JAN17	

Location: Newly Installed Influent Pump Skid
Description: Completed Pressure Switch
Date: 24 January 2017 Direction: East

Location: Newly Installed Effluent Pump Skid
Description: Installed Bag Filter Tank Drain Fittings
Date: 24 January 2017 Direction: Down

Location: Newly Installed Effluent Pump Skid
Description: Installed Bag Filter Tank Vent Lines
Date: 24 January 2017 Direction: South

Location: Newly Installed Effluent Pump Skid
Description: Installed Bag Filter Tank Drain Fittings
Date: 24 January 2017 Direction: Down

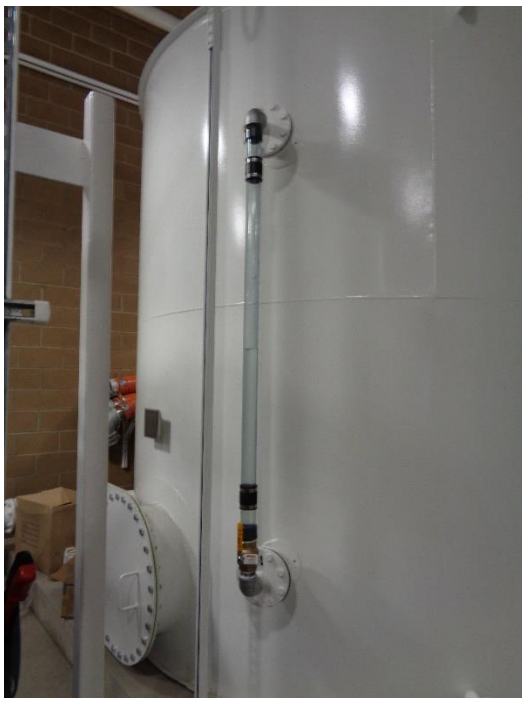

Location: Newly Installed Effluent Tank
Description: Reinstalled Sight Tube
Date: 24 January 2017 Direction: Northwest

Location: Existing Effluent Tank
Description: Reinstalled Sight Tube
Date: 24 January 2017 Direction: South

Location: Above Control Room Door
Description: Updated Display Message
Date: 24 January 2017 Direction: East

Location: Above Control Room Door
Description: Updated Display Message
Date: 24 January 2017 Direction: East

Location: Newly Installed GAC Vessel Tree
Description: Installed Sampling Port
Date: 24 January 2017 Direction: Southwest

Location: Newly Installed GAC Vessel Tree
Description: Installed Sampling Port
Date: 24 January 2017 Direction: Southeast

Location: South Wall
Description: Installed Hose Rack and Plant Air and Water Fittings
Date: 24 January 2017 Direction: Southeast

Location: South Wall
Description: Installed Hose Rack and Plant Air Fitting
Date: 24 January 2017 Direction: Southwest

Location: Existing Effluent Pump Skid
Description: Installed Conduit Cap
Date: 24 January 2017 Direction: North

Location: Newly Installed Effluent Pump Skid
Description: Installed Conduit Cap
Date: 24 January 2017 Direction: North

Location: Newly Installed Effluent Pump Skid
Description: Installed ARV Drain Line (Partial)
Date: 24 January 2017 Direction: West

Location: North Wall Near Air Compressor
Description: Installed Hose Rack
Date: 24 January 2017 Direction: North

EA Engineering, Science, and Technology, Inc.

DAILY SAFETY INSPECTION CHECKLIST
(TO BE COMPLETED EACH DAY OF CONSTRUCTION OR HTRW SITE ACTIVITIES)

Site: Bulk Fuels Facility Exp
Location: KAFB BLDG 19150
Project No.: 62599DM01
Client: USACE

Prepared by SSHO: Pete Ferrari
Project Manager: Devon Jercinovic
Date: 1-24-2017

Rating	Y	N	N/A	Comments/Immediate Corrective Action[1]
Accident Prevention Plan (APP) and Site Safety and Health Plan (SSHP) General Requirements				
Are there new onsite personnel? • Did they receive pre-entry briefing and are their names recorded in field logbook or daily log? • Was the USACE PM made aware of the new personnel. • Required training and medical surveillance documentation received (e.g., 40-hr, 8 hr, etc.)?			✓	
Did personnel sign in/out of site?	✓			
Daily tailgate safety meetings conducted and documented?	✓			
Were new activities performed today? Were hazards identified, discussed during the daily safety tailgate, and incorporated into revised APP/SSHP?		✓		
New materials brought on site? MSDSs available?	✓			
Exclusion (EZ), Contamination Reduction (CRZ), and Support Zones (SZ) delineated and enforced?			✓	
General housekeeping measures in place to prevent hazards?	✓			
Emergency Planning				
Were there any changes to emergency contact names, telephone numbers, or hospital? If so, were site personnel made aware and was information distributed/reposted.			✓	
Adequate safety equipment inventory available?	✓			
Fire extinguisher available (monthly inspection of extinguisher will suffice)	✓			
Eyewash station(s) functioning and in place (weekly inspection of eye wash station will suffice)?	✓			
First aid supplies available (weekly inspection of first aid kit will suffice)?	✓			
Communication equipment readily available for emergencies?	✓			
Any reported accidents/incidents at this site? If so, were accident reporting procedures followed?			✓	
Air Monitoring				
Monitoring equipment specified in SSHP available and in working order? Air monitoring instrumentation for this site includes – check each if required/on site, note deficiencies in comments: • Combustible gas meter • Organic vapor analyzer • Contaminant specific analyzer for benzene (if total organic vapor concentrations exceed 0.5 ppm)			✓	
Monitoring equipment calibrated and calibration records			✓	

Y = Satisfactory or Yes; N = Unsatisfactory or No, N/A = Not applicable

Rating	Y	N	N/A	Comments/Immediate Corrective Action[1]
available?				
Environmental and personnel monitoring performed as specified in SSHP?				
PPE				
Proper dermal protection worn by EA and subcontracted employees when handling/ contacting hazardous chemicals or contaminated environmental media?				
Required PPE (hard hats, safety boots / shoes, eye protection with side shields, hearing protection) being worn by EA and subcontracted employees?				
PPE inspection completed by SSHO?				
Drill Rig Operations				
Daily rig inspection completed? Any equipment problems?				
Drill rigs/elevated equipment maintaining minimum 10-ft distance from energized (50 kV) overhead power lines?				
Investigation-derived Waste (IDW)				
Wastes properly staged, secured, and labeled at end of day?				

Additional Comments:

Peter Fennant
Site Safety and Health Officer's Signature

1-24-2017
Date

[1]If a deficiency is noted that cannot be immediately corrected, the SSHO will monitor the progress in correcting the deficiency and will document following:

- Date the deficiency was identified
- Description of the deficiency
- Name of the person responsible for correcting the deficiency
- Projected date of correction
- Actual date of correction.

EA ENGINEERING, SCIENCE AND TECHNOLOGY, INC.
SAFETY MEETING REPORT

Date: 1-24-17	Time: 0700	Duration of meeting: 5 min	Project #
Location: KAFB BLDG 19150		Task: ~~Sight~~ glasses, Pump (more water), PLC programming, ARV pipe	

Type of meeting: ___Daily ___Weekly ___Monthly ___Other:_____

Items/Issues discussed:

1. Hand tool use
2. Ladder safety
3. PPE
4.
5.

Attach minutes of safety meeting if taken.

Safety questions/issues raised:	Actions/Follow-up needed:
1.	
2.	
3.	
4.	
5.	
6.	

Remarks:

Meeting conducted by:
Peter Juran

HEALTH AND SAFETY ACTIVITY REPORT

Site: Bulk Fuels Facility Expansion Location: KAFB BLDG 19150

Weather Cond.: Clear, Cold, Windy Onsite Hours: From 0700 To 1615

Changes in PPE Levels[1]	Work Operations	Reasons for Change
None		

Site Safety and Health Plan Violations	Corrective Action Specified	Corrective Action Taken[2] (yes/no)
No violations		

Observations and Comments:

Completed by: Peter Jensen 1/23/2017 Date:
Site Health and Safety Supervisor 24

[1]Only SSHO may change PPE levels, using only criteria specified in APP/SSHP.
[2]If a deficiency is noted that cannot be immediately corrected, the SSHO will monitor the progress in correcting the deficiency and will document following:

- Date the deficiency was identified
- Description of the deficiency
- Name of the person responsible for correcting the deficiency
- Projected date of correction
- Actual date of correction.

DAILY REPORT

(ATTACH ADDITIONAL SHEETS IF NECESSARY)

CONTRACT NAME:	Kirtland AFB Bulk Fuels Facility Expansion of Dissolved Plume GWTS Design	REPORT NO:	063
CONTRACT NUMBER:	W912DR-12-D-0006	REPORT DATE:	25 JAN 17
REVISION NUMBER:	-	REVISION DATE:	-
TASK ORDER NUMBER:	DM01	PROJECT NAME / LOCATION:	KAFB, ABQ, NM
PROJECT NUMBER:	62599DM01	PROJECT DESCRIPTION:	KAFB, GWTS Expansion
PROJECT MANAGER:	Devon Jercinovic	FIELD QUALITY MANAGER:	Kevin McKeage
CONSTRUCTION MANAGER:	None	SITE SAFETY MANAGER:	Pete Ferrari

AM WEATHER:	Cool, Partly Cloudy	PM WEATHER:	Cool, Partly Cloudy breezy	MAX TEMP (F):	36°		

SUMMARY OF WORK PERFORMED TODAY

Continued HMI programming, installed ARV Drain line, spliced into Well 7 flow reading (temporarily). Tightened Manhole on Western most newly installed GAC Vessel.

HEALTH AND SAFETY REPORT

SAFETY ACTIONS TAKEN TODAY/SAFETY INSPECTIONS CONDUCTED (Include Observations, Safety Violations, Corrective Instructions Given, Corrective Actions Taken, and Results of Safety Inspections Conducted:

Visual Observation, no violations

TAILGATE TOPICS:

Lift Safety, Slips, Trips, and Falls.

SAFE BEHAVIOR OBSERVATIONS/SELF-ASSESSMENTS:

Safe behavior observed

OPERATIONS/PRODUCTION REPORT

WORK FORCE – CONTRACTOR AND SUBCONTRACTOR

Company	Cumulative Total of Work Hours From Previous Report	Total Hours Today	Total Work Hours From Start of Injection Event
Techsas	336	5	341
I+C Solutions	160	16	176
Ruport	571	2	~~573~~ 573

EQUIPMENT ON HAND

Description of Equipment	Make/Model/ Manufacturer	Equipment ID Number	Inspection Performed By
Man lift #1	Genie 1930		Mike Altcorn.

COMMENTS (acceptance status, inspection findings, etc.):

OK

WORK AND/OR TESTS ACCOMPLISHED OR IN PROGRESS

Performed Work/Test for Today: Continued HMI programming, installed ARV Drainline, spliced into Well 7 flow meter readout (temporary). Tightened Manhole on Western Newly Installed GAC Vessel.

Planned Work/Test for Tomorrow: Continue HMI Programming / Shakedown.

Planned Work/Test for Next Week: Finalize Construction and Pretest Inspections

CHANGED CONDITIONS/DELAY/CONFLICTS ENCOUNTERED (List any conflicts with the project [i.e., scope of work and/or drawings], delays to the project attributable to site and weather conditions, etc. None

VISITORS AND DISCUSSIONS: Trent and Amy with USACE visited the site today.

QUALITY CONTROL REPORT

MATERIALS DELIVERED TO JOB SITE

Quantity/Volume/ Weight	Description of Materials Received	Make/Model/ Manufacturer	Material Lot Number	Inspection Performed By
None				

COMMENTS (acceptance status, inspection findings, etc.): None

INSPECTIONS PERFORMED

Task/Activity Inspected	Inspection Performed	Findings
ARV Drainline	Visual Inspection	OK
Temporary Splice into Well 7 Readout	Visual Inspection	OK

TESTS PERFORMED

Task/Activity Tested	Test Performed	Test Results (Pass/Fail) - Criteria
Run Both Trains Simultaneously,	Operational	System Operated as Intended.

QUALITY ISSUES AND RESOLUTIONS: None

SUBMITTALS INSPECTION / REVIEW

Submittal No.	Submittal Description	Specification/Plan Reference	Submittal Approved?		Comment/Reason/Action
NA	Daily Report	–	Yes ☐	No ☐	Pending
NA	SBO	–	Yes ☐	No ☐	Pending
NA	PTSP	–	Yes ☐	No ☐	Pending

REGULATORY COMPLIANCE REPORT							
PERMIT INSPECTIONS PERFORMED: None							
WASTE ACCUMULATION/STOCKPILE AREA INSPECTION							
Inspection Performed By:	None			Signature of Inspector:			
Accumulation / Stockpile Area Inspected:							
No of Bins:		No of Tankers		No of Roll-Off Boxes:		No. of Tanks	
Inspection Results: NA							
GENERAL COMMENTS							
General Comments: (rework, directives, etc.):							
ATTACHMENTS							
List of Attachments: (examples, as applicable: submittals, meeting minutes, safety meeting minutes, COCs, weight tickets, manifests, profiles, rework item list, RFIs, DCNs, photographs, etc.): Photologs and Safety Documentation							
NOTE: Write all entries legibly in ink. Line out all unused portions or designate as "not applicable". Preparer signs first and last name on each completed daily report. This form may be filled out electronically and signed electronically.				PREPARER'S SIGNATURE		DATE: 25 JAN 17	

Location: Newly Installed Effluent Pump Skid
Description: Completed ARV Drain Line
Date: 25 January 2017 Direction: West

Location: KAFB-7
Description: Installed Temporary Line to Splice into KAFB-7 Flow Readings
Date: 25 January 2017 Direction: Down

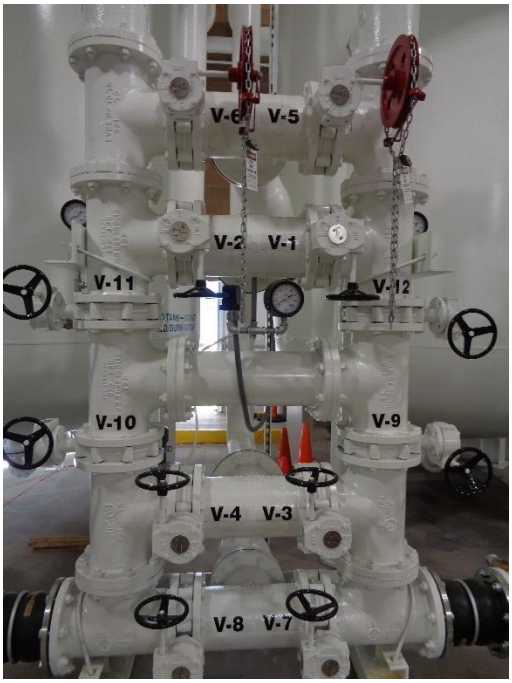

Location: Newly Installed GAC Vessel Tree
Description: Installed Valve Labels
Date: 25 January 2017 Direction: South

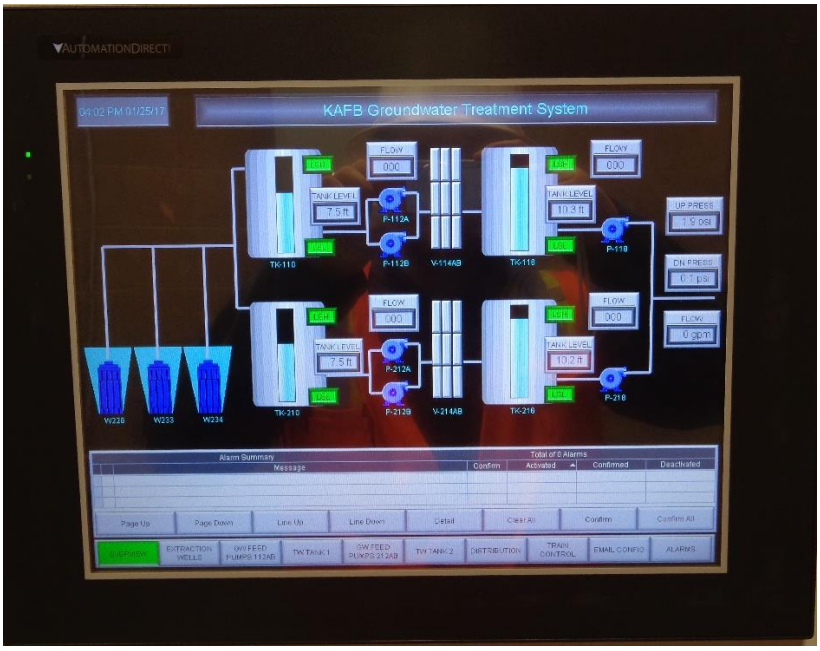

Location: Control Room
Description: Continued Updating HMI Programming
Date: 25 January 2017 Direction: South

EA Engineering, Science, and Technology, Inc.

DAILY SAFETY INSPECTION CHECKLIST (TO BE COMPLETED EACH DAY OF CONSTRUCTION OR HTRW SITE ACTIVITIES)

Site: Bulk Fuels Facility Expansion
Location: KAFB Bldg 19150
Project No.: 62599DM01
Client: USACE

Prepared by SSHO: Pete Ferraro
Project Manager: Devon Jercinovic
Date: 1/25/2017

Rating	Y	N	N/A	Comments/Immediate Corrective Action[1]
Accident Prevention Plan (APP) and Site Safety and Health Plan (SSHP) General Requirements				
Are there new onsite personnel? • Did they receive pre-entry briefing and are their names recorded in field logbook or daily log? • Was the USACE PM made aware of the new personnel. • Required training and medical surveillance documentation received (e.g., 40-hr, 8 hr, etc.)?				
Did personnel sign in/out of site?				
Daily tailgate safety meetings conducted and documented?				
Were new activities performed today? Were hazards identified, discussed during the daily safety tailgate, and incorporated into revised APP/SSHP?				
New materials brought on site? MSDSs available?				
Exclusion (EZ), Contamination Reduction (CRZ), and Support Zones (SZ) delineated and enforced?				
General housekeeping measures in place to prevent hazards?				
Emergency Planning				
Were there any changes to emergency contact names, telephone numbers, or hospital? If so, were site personnel made aware and was information distributed/reposted.				
Adequate safety equipment inventory available?				
Fire extinguisher available (monthly inspection of extinguisher will suffice)				
Eyewash station(s) functioning and in place (weekly inspection of eye wash station will suffice)?				
First aid supplies available (weekly inspection of first aid kit will suffice)?				
Communication equipment readily available for emergencies?				
Any reported accidents/incidents at this site? If so, were accident reporting procedures followed?				
Air Monitoring				
Monitoring equipment specified in SSHP available and in working order? Air monitoring instrumentation for this site includes – check each if required/on site, note deficiencies in comments: • Combustible gas meter • Organic vapor analyzer • Contaminant specific analyzer for benzene (if total organic vapor concentrations exceed 0.5 ppm)				
Monitoring equipment calibrated and calibration records				

Y = Satisfactory or Yes; N = Unsatisfactory or No, N/A = Not applicable

Rating	Y	N	N/A	Comments/Immediate Corrective Action[1]
available?				
Environmental and personnel monitoring performed as specified in SSHP?				
PPE				
Proper dermal protection worn by EA and subcontracted employees when handling/ contacting hazardous chemicals or contaminated environmental media?				
Required PPE (hard hats, safety boots / shoes, eye protection with side shields, hearing protection) being worn by EA and subcontracted employees?				
PPE inspection completed by SSHO?				
Drill Rig Operations				
Daily rig inspection completed? Any equipment problems?				
Drill rigs/elevated equipment maintaining minimum 10-ft distance from energized (50 kV) overhead power lines?				
Investigation-derived Waste (IDW)				
Wastes properly staged, secured, and labeled at end of day?				

Additional Comments:

Site Safety and Health Officer's Signature

1/25/2017
Date

[1]If a deficiency is noted that cannot be immediately corrected, the SSHO will monitor the progress in correcting the deficiency and will document following:

- Date the deficiency was identified
- Description of the deficiency
- Name of the person responsible for correcting the deficiency
- Projected date of correction
- Actual date of correction.

Y = Satisfactory or Yes; N = Unsatisfactory or No, N/A = Not applicable

EA ENGINEERING, SCIENCE AND TECHNOLOGY, INC.
SAFETY MEETING REPORT

Date: 1/25/2017	Time: 0700	Duration of meeting: 5 min	Project #
Location: KAFB Bldg 19150		Task: Programming, ARV piping, Seal GAC Manway	

Type of meeting: ✓ Daily ___ Weekly ___ Monthly ___ Other: _____

Items/Issues discussed:

1. Lift safety (scissor)
2. Slip, trip, fall
3.
4.
5.

Attach minutes of safety meeting if taken.

Safety questions/issues raised:	Actions/Follow-up needed:
1.	
2.	
3.	
4.	
5.	
6.	

Remarks:

Meeting conducted by:
Peter Duran

HEALTH AND SAFETY ACTIVITY REPORT

Site: Bulk Fuel Facility Expansion Location: KAFB Bldg 19150

Weather Cond.: Clear, Cold Onsite Hours: From 0700 To 1610

Changes in PPE Levels[1]	Work Operations	Reasons for Change
No changes		

Site Safety and Health Plan Violations	Corrective Action Specified	Corrective Action Taken [2](yes/no)
~~No change~~ No Violations		

Observations and Comments:

Completed by: Peter Jumars 1/25/2017
Site Health and Safety Supervisor Date:

[1]Only SSHO may change PPE levels, using only criteria specified in APP/SSHP.
[2]If a deficiency is noted that cannot be immediately corrected, the SSHO will monitor the progress in correcting the deficiency and will document following:

- Date the deficiency was identified
- Description of the deficiency
- Name of the person responsible for correcting the deficiency
- Projected date of correction
- Actual date of correction.

DAILY REPORT

(ATTACH ADDITIONAL SHEETS IF NECESSARY)

CONTRACT NAME:	Kirtland AFB Bulk Fuels Facility Expansion of Dissolved Plume GWTS Design	REPORT NO:	064
CONTRACT NUMBER:	W912DR-12-D-0006	REPORT DATE:	26 JAN 17
REVISION NUMBER:	-	REVISION DATE:	-
TASK ORDER NUMBER:	DM01	PROJECT NAME / LOCATION:	KAFB, ABQ, NM
PROJECT NUMBER:	62599DM01	PROJECT DESCRIPTION:	KAFB GWTS Expansion
PROJECT MANAGER:	Devon Jercinovic	FIELD QUALITY MANAGER:	Kevin McKenzie
CONSTRUCTION MANAGER:	None	SITE SAFETY MANAGER:	Pete Ferrari

AM WEATHER:	Cool, Partly Cloudy	PM WEATHER:	Cool, Cloudy	MAX TEMP (F):	35°		

SUMMARY OF WORK PERFORMED TODAY

Met with Wilson Electric to address USACE items and continued HMI programming.

HEALTH AND SAFETY REPORT

SAFETY ACTIONS TAKEN TODAY/SAFETY INSPECTIONS CONDUCTED (Include Observations, Safety Violations, Corrective Instructions Given, Corrective Actions Taken, and Results of Safety Inspections Conducted:

Visual Observation, no violations

TAILGATE TOPICS:

Traffic Safety, Ergonomics, Electrical Safety (Low Voltage), etc.

SAFE BEHAVIOR OBSERVATIONS/SELF-ASSESSMENTS:

Safe behavior observed.

OPERATIONS/PRODUCTION REPORT

WORK FORCE – CONTRACTOR AND SUBCONTRACTOR

Company	Cumulative Total of Work Hours From Previous Report	Total Hours Today	Total Work Hours
Wilson Electric	310	1	311
I+C Solutions	176	5	181

EQUIPMENT ON HAND

Description of Equipment	Make/Model/ Manufacturer	Equipment ID Number	Inspection Performed By
None			

COMMENTS (acceptance status, inspection findings, etc.):

OK

WORK AND/OR TESTS ACCOMPLISHED OR IN PROGRESS

Performed Work/Test for Today:
Met with Wilson Electric and HMI programmer.

Planned Work/Test for Tomorrow:
Continue HMI programming.

Planned Work/Test for Next Week:
Finalize Construction and perform Pre-Final Inspections

CHANGED CONDITIONS/DELAY/CONFLICTS ENCOUNTERED (List any conflicts with the project [i.e., scope of work and/or drawings], delays to the project attributable to site and weather conditions, etc.

VISITORS AND DISCUSSIONS: None

QUALITY CONTROL REPORT

MATERIALS DELIVERED TO JOB SITE

Quantity/Volume/ Weight	Description of Materials Received	Make/Model/ Manufacturer	Material Lot Number	Inspection Performed By
None				

COMMENTS (acceptance status, inspection findings, etc.): None

INSPECTIONS PERFORMED

Task/Activity Inspected	Inspection Performed	Findings
Working on HMI Programming	Visual inspection	OK

TESTS PERFORMED

Task/Activity Tested	Test Performed	Test Results (Pass/Fail) - Criteria
None		

QUALITY ISSUES AND RESOLUTIONS: None

SUBMITTALS INSPECTION / REVIEW

Submittal No.	Submittal Description	Specification/Plan Reference	Submittal Approved?		Comment/Reason/Action
NA	Daily Report	–	Yes ☐	No ☐	Pending
NA	SBO	–	Yes ☐	No ☐	Pending
NA	PTSP	–	Yes ☐	No ☐	Pending

REGULATORY COMPLIANCE REPORT							
PERMIT INSPECTIONS PERFORMED: None							
WASTE ACCUMULATION/STOCKPILE AREA INSPECTION							
Inspection Performed By:	NA			Signature of Inspector:			
Accumulation / Stockpile Area Inspected:							
No of Bins:		No of Tankers		No of Roll-Off Boxes:		No. of Tanks	
Inspection Results: NA							
GENERAL COMMENTS							
General Comments: (rework, directives, etc.):							
ATTACHMENTS							
List of Attachments: (examples, as applicable: submittals, meeting minutes, safety meeting minutes, COCs, weight tickets, manifests, profiles, rework item list, RFIs, DCNs, photographs, etc.): Photo log + Safety Documentation							
NOTE: Write all entries legibly in ink. Line out all unused portions or designate as "not applicable". Preparer signs first and last name on each completed daily report. This form may be filled out electronically and signed electronically.				PREPARER'S SIGNATURE		DATE: 26 JAN 17	

Location: Control Room
Description: Continued Updating HMI Programming
Date: 26 January 2017 Direction: South

EA Engineering, Science, and Technology, Inc.

DAILY SAFETY INSPECTION CHECKLIST
(TO BE COMPLETED EACH DAY OF CONSTRUCTION OR HTRW SITE ACTIVITIES)

Site: Bulk Fuels Facility Expansion
Location: KAFB BLDG 19150
Project No.: 62599DM01
Client: ~~USAFF~~ USACE

Prepared by SSHO: Pete Ferrari
Project Manager: Devon Jevcinovic
Date: 1-26-17

Rating	Y	N	N/A	Comments/Immediate Corrective Action[1]
Accident Prevention Plan (APP) and Site Safety and Health Plan (SSHP) General Requirements				
Are there new onsite personnel? • Did they receive pre-entry briefing and are their names recorded in field logbook or daily log? • Was the USACE PM made aware of the new personnel. • Required training and medical surveillance documentation received (e.g., 40-hr, 8 hr, etc.)?				
Did personnel sign in/out of site?				
Daily tailgate safety meetings conducted and documented?				
Were new activities performed today? Were hazards identified, discussed during the daily safety tailgate, and incorporated into revised APP/SSHP?				
New materials brought on site? MSDSs available?				
Exclusion (EZ), Contamination Reduction (CRZ), and Support Zones (SZ) delineated and enforced?				
General housekeeping measures in place to prevent hazards?				
Emergency Planning				
Were there any changes to emergency contact names, telephone numbers, or hospital? If so, were site personnel made aware and was information distributed/reposted.				
Adequate safety equipment inventory available?				
Fire extinguisher available (monthly inspection of extinguisher will suffice)				
Eyewash station(s) functioning and in place (weekly inspection of eye wash station will suffice)?				
First aid supplies available (weekly inspection of first aid kit will suffice)?				
Communication equipment readily available for emergencies?				
Any reported accidents/incidents at this site? If so, were accident reporting procedures followed?				
Air Monitoring				
Monitoring equipment specified in SSHP available and in working order? Air monitoring instrumentation for this site includes – check each if required/on site, note deficiencies in comments: • Combustible gas meter • Organic vapor analyzer • Contaminant specific analyzer for benzene (if total organic vapor concentrations exceed 0.5 ppm)				
Monitoring equipment calibrated and calibration records				

Y = Satisfactory or Yes; N = Unsatisfactory or No, N/A = Not applicable

	Y	N	N/A	Comments/Immediate Corrective Action[1]
Rating				
available?			✓	
Environmental and personnel monitoring performed as specified in SSHP?			✓	
PPE				
Proper dermal protection worn by EA and subcontracted employees when handling/ contacting hazardous chemicals or contaminated environmental media?	✓			
Required PPE (hard hats, safety boots / shoes, eye protection with side shields, hearing protection) being worn by EA and subcontracted employees?	✓			
PPE inspection completed by SSHO?	✓			
Drill Rig Operations				
Daily rig inspection completed? Any equipment problems?			✓	
Drill rigs/elevated equipment maintaining minimum 10-ft distance from energized (50 kV) overhead power lines?			✓	
Investigation-derived Waste (IDW)				
Wastes properly staged, secured, and labeled at end of day?			✓	

Additional Comments:

Peter Jensen
Site Safety and Health Officer's Signature

1-26-17
Date

[1]If a deficiency is noted that cannot be immediately corrected, the SSHO will monitor the progress in correcting the deficiency and will document following:

- Date the deficiency was identified
- Description of the deficiency
- Name of the person responsible for correcting the deficiency
- Projected date of correction
- Actual date of correction.

EA ENGINEERING, SCIENCE AND TECHNOLOGY, INC.
SAFETY MEETING REPORT

Date: 1-26-17	Time: 0700	Duration of meeting: 5 min	Project #
Location: KAFB BLDG 19150		Task: Daily, weekly Readings, Programming	

Type of meeting: ✓ Daily ___ Weekly ___ Monthly ___ Other: _____

Items/Issues discussed:

1. Traffic Safety - cone placement
2. - proper PPE
3. Ergonomics - use legs lifting & opening vaults
4. Electrical Safety - low voltage
5.

Attach minutes of safety meeting if taken.

Safety questions/issues raised:	Actions/Follow-up needed:
1.	
2.	
3.	
4.	
5.	
6.	

Remarks:

Meeting conducted by: Peter Jensen

HEALTH AND SAFETY ACTIVITY REPORT

Site: Bulk Fuels Facility Expansion Location: ~~LAFB~~ BLDG 19150

Weather Cond.: Clear Cold Onsite Hours: From 0700 To 1610

Changes in PPE Levels[1]	Work Operations	Reasons for Change
No Changes		

Site Safety and Health Plan Violations	Corrective Action Specified	Corrective Action Taken[2] (yes/no)
No Safety Violations		

Observations and Comments:

Completed by: Peter Jurus 1-26-2017 Date:
Site Health and Safety Supervisor

[1]Only SSHO may change PPE levels, using only criteria specified in APP/SSHP.

[2]If a deficiency is noted that cannot be immediately corrected, the SSHO will monitor the progress in correcting the deficiency and will document following:

- Date the deficiency was identified
- Description of the deficiency
- Name of the person responsible for correcting the deficiency
- Projected date of correction
- Actual date of correction.

DAILY REPORT

(ATTACH ADDITIONAL SHEETS IF NECESSARY)

CONTRACT NAME:	Kirtland AFB Bulk Fuels Facility Expansion of Dissolved Plume GWTS Design	REPORT NO:	065
CONTRACT NUMBER:	W912DR-12-D-0006	REPORT DATE:	27 JAN 17
REVISION NUMBER:	-	REVISION DATE:	-
TASK ORDER NUMBER:	DM01	PROJECT NAME / LOCATION:	KAFB, ABQ, Nm
PROJECT NUMBER:	62599DM01	PROJECT DESCRIPTION:	KAFB GWTS Expansion
PROJECT MANAGER:	Devon Jercinovic	FIELD QUALITY MANAGER:	Kevin McKeage
CONSTRUCTION MANAGER:		SITE SAFETY MANAGER:	Pete Ferrari

AM WEATHER:	Cool, partly Cloudy	PM WEATHER:	Cool, Clear	MAX TEMP (F):	35°		

SUMMARY OF WORK PERFORMED TODAY

Partially addressed USACE punchlist electrical items.

HEALTH AND SAFETY REPORT

SAFETY ACTIONS TAKEN TODAY/SAFETY INSPECTIONS CONDUCTED (Include Observations, Safety Violations, Corrective Instructions Given, Corrective Actions Taken, and Results of Safety Inspections Conducted:

Visual Observation, no violations

TAILGATE TOPICS:

Lock out tag out, Documentation, breaker panel Safety.

SAFE BEHAVIOR OBSERVATIONS/SELF-ASSESSMENTS:

Safe behavior observed

OPERATIONS/PRODUCTION REPORT

WORK FORCE – CONTRACTOR AND SUBCONTRACTOR

Company	Cumulative Total of Work Hours From Previous Report	Total Hours Today	Total Work Hours
Wilson Electric	311	4	315

EQUIPMENT ON HAND

Description of Equipment	Make/Model/ Manufacturer	Equipment ID Number	Inspection Performed By
None			

COMMENTS (acceptance status, inspection findings, etc.):

OK

WORK AND/OR TESTS ACCOMPLISHED OR IN PROGRESS

Performed Work/Test for Today:
Partially addressed USACE punchlist electrical items.

Planned Work/Test for Tomorrow:
None

Planned Work/Test for Next Week:
Address remaining punchlist items, Pretest inspections

CHANGED CONDITIONS/DELAY/CONFLICTS ENCOUNTERED (List any conflicts with the project [i.e., scope of work and/or drawings], delays to the project attributable to site and weather conditions, etc. None

VISITORS AND DISCUSSIONS: None

QUALITY CONTROL REPORT

MATERIALS DELIVERED TO JOB SITE

Quantity/Volume/ Weight	Description of Materials Received	Make/Model/ Manufacturer	Material Lot Number	Inspection Performed By
~~Hoffman~~ 4	Hoffman Seals			KM
Various	Conduit Brackets			KM

COMMENTS (acceptance status, inspection findings, etc.): OK

INSPECTIONS PERFORMED

Task/Activity Inspected	Inspection Performed	Findings
Seal Installation	Visual Inspection	OK
Conduit Bracket Installation	Visual Inspection	OK

TESTS PERFORMED

Task/Activity Tested	Test Performed	Test Results (Pass/Fail) - Criteria
None		

QUALITY ISSUES AND RESOLUTIONS: None

SUBMITTALS INSPECTION / REVIEW

Submittal No.	Submittal Description	Specification/Plan Reference	Submittal Approved?		Comment/Reason/Action
NA	Daily Report	–	Yes ☐	No ☐	Pending
NA	SBO	–	Yes ☐	No ☐	Pending
NA	PTSP	–	Yes ☐	No ☐	Pending

REGULATORY COMPLIANCE REPORT

PERMIT INSPECTIONS PERFORMED: None

WASTE ACCUMULATION/STOCKPILE AREA INSPECTION

Inspection Performed By:	NA	Signature of Inspector:	
Accumulation / Stockpile Area Inspected:			

No of Bins:		No of Tankers		No of Roll-Off Boxes:		No. of Tanks	

Inspection Results: NA

GENERAL COMMENTS

General Comments: (rework, directives, etc.):

ATTACHMENTS

List of Attachments: (examples, as applicable: submittals, meeting minutes, safety meeting minutes, COCs, weight tickets, manifests, profiles, rework item list, RFIs, DCNs, photographs, etc.): Photolog and Safety Documentation

NOTE: Write all entries legibly in ink. Line out all unused portions or designate as "not applicable". Preparer signs first and last name on each completed daily report. This form may be filled out electronically and signed electronically.

PREPARER'S SIGNATURE

27 JAN 17

DATE

Location: Newly Installed Influent Pump Skid
Description: Plugged Panel Opening
Date: 27 January 2017 Direction: West

Location: Newly Installed Influent Pump Skid
Description: Installed Rigid Conduit Straps
Date: 27 January 2017 Direction: South

Location: Existing Influent Pump Skid
Description: Plugged Panel Opening
Date: 27 January 2017 Direction: South

Location: Existing Influent Pump Skid
Description: Installed Rigid Conduit Straps
Date: 27 January 2017 Direction: Down

Location: Newly Installed Influent Pump Skid
Description: Plugged Panel Opening
Date: 27 January 2017 Direction: West

Location: Newly Installed Effluent Pump Skid
Description: Installed Rigid Conduit Straps
Date: 27 January 2017 Direction: South

Location: Newly Installed Effluent Pump Skid
Description: Plugged Panel Opening
Date: 27 January 2017 Direction: West

Location: Newly Installed Effluent Pump Skid
Description: Installed Rigid Conduit Straps
Date: 27 January 2017 Direction: Down

Location: Newly Installed Effluent Pump Skid
Description: Plugged Panel Opening
Date: 27 January 2017 Direction: West

EA Engineering, Science, and Technology, Inc.

DAILY SAFETY INSPECTION CHECKLIST (TO BE COMPLETED EACH DAY OF CONSTRUCTION OR HTRW SITE ACTIVITIES)

Site: KAFB Bulk Fuels GWTS Expansion
Location: KAFB Bldg. 19150
Project No.: 62599DM01
Client: USACE
Prepared by SSHO: Pete Ferraro
Project Manager:
Date: 1/25/2017 27 km

Rating	Y	N	N/A	Comments/Immediate Corrective Action[1]
Accident Prevention Plan (APP) and Site Safety and Health Plan (SSHP) General Requirements				
Are there new onsite personnel? • Did they receive pre-entry briefing and are their names recorded in field logbook or daily log? • Was the USACE PM made aware of the new personnel • Required training and medical surveillance documentation received (e.g., 40-hr, 8 hr, etc.)?		✓	✓	
Did personnel sign in/out of site?	✓			
Daily tailgate safety meetings conducted and documented?	✓			
Were new activities performed today? Were hazards identified, discussed during the daily safety tailgate, and incorporated into revised APP/SSHP?		✓	✓	
New materials brought on site? MSDSs available?		✓	✓	
Exclusion (EZ), Contamination Reduction (CRZ), and Support Zones (SZ) delineated and enforced?			✓	
General housekeeping measures in place to prevent hazards?	✓			
Emergency Planning				
Were there any changes to emergency contact names, telephone numbers, or hospital? If so, were site personnel made aware and was information distributed/reposted		✓	✓	
Adequate safety equipment inventory available?	✓			
Fire extinguisher available (monthly inspection of extinguisher will suffice)	✓			
Eyewash station(s) functioning and in place (weekly inspection of eye wash station will suffice)?	✓			
First aid supplies available (weekly inspection of first aid kit will suffice)?	✓			
Communication equipment readily available for emergencies?	✓			
Any reported accidents/incidents at this site? If so, were accident reporting procedures followed?			✓	
Air Monitoring				
Monitoring equipment specified in SSHP available and in working order? Air monitoring instrumentation for this site includes – check each if required on site, note deficiencies in comments: • Combustible gas meter • Organic vapor analyzer • Contaminant specific analyzer for benzene (if total organic vapor concentrations exceed 0.5 ppm)			✓	
Monitoring equipment calibrated and calibration records			✓	

Y = Satisfactory or Yes; N = Unsatisfactory or No; N/A = Not applicable

Rating	Y	N	N/A	Comments/Immediate Corrective Action[1]
available?				
Environmental and personnel monitoring performed as specified in SSHP?				
PPE				
Proper dermal protection worn by EA and subcontracted employees when handling/ contacting hazardous chemicals or contaminated environmental media?				
Required PPE (hard hats, safety boots / shoes, eye protection with side shields, hearing protection) being worn by EA and subcontracted employees?				
PPE inspection completed by SSHO?				
Drill Rig Operations				
Daily rig inspection completed? Any equipment problems?				
Drill rigs/elevated equipment maintaining minimum 10-ft distance from energized (50 kV) overhead power lines?				
Investigation-derived Waste (IDW)				
Wastes properly staged, secured, and labeled at end of day?				

Additional Comments:

Peter Stewart
Site Safety and Health Officer's Signature

1/26/2017
Date 27 km

[1]If a deficiency is noted that cannot be immediately corrected, the SSHO will monitor the progress in correcting the deficiency and will document following:

- Date the deficiency was identified
- Description of the deficiency
- Name of the person responsible for correcting the deficiency
- Projected date of correction
- Actual date of correction

EA ENGINEERING, SCIENCE AND TECHNOLOGY, INC.
SAFETY MEETING REPORT

27 Kn

Date: 1/~~25~~/2017	Time: 1330	Duration of meeting: 5 min	Project #
Location: KAFB Bldg 19430		Task: Install water proof seals on new skid control panels	

Type of meeting: ___Daily ___Weekly ___Monthly ___Other:_____

Items/Issues discussed:

1. Locke-out tag-out placement and
2. documumentation
3. Safety of breaker panel access
4. and use.
5.

Attach minutes of safety meeting if taken.

Safety questions/issues raised:	Actions/Follow-up needed:
1. Do we know it's safe to access	Yes, breaker
2. and turn off/on breakers	panel cover
3. for lock out/tag out to	must be fully
4. control pumps?	bolted into
5.	place for
6.	safe breaker use

Remarks:

Meeting conducted by: Peter Jumard / Britt C.

HEALTH AND SAFETY ACTIVITY REPORT

Site: KAFB Bulk Fuel GWTS Location: Bldg 19150

Weather Cond.: Clear/very cold Onsite Hours: From 1000 To 1430

Changes in PPE Levels[1]	Work Operations	Reasons for Change
None		

Site Safety and Health Plan Violations	Corrective Action Specified	Corrective Action Taken [2](yes/no)
No violations		

Observations and Comments:

Completed by: Peter Jensen 1-26-2017 Date:
Site Health and Safety Supervisor

27 KM

[1]Only SSHO may change PPE levels, using only criteria specified in APP/SSHP.
[2]If a deficiency is noted that cannot be immediately corrected, the SSHO will monitor the progress in correcting the deficiency and will document following:

- Date the deficiency was identified
- Description of the deficiency
- Name of the person responsible for correcting the deficiency
- Projected date of correction
- Actual date of correction

DAILY REPORT

(ATTACH ADDITIONAL SHEETS IF NECESSARY)

CONTRACT NAME:	Kirtland AFB Bulk Fuels Facility Expansion of Dissolved Plume GWTS Design	REPORT NO:	066
CONTRACT NUMBER:	W912DR-12-D-0006	REPORT DATE:	30JAN~~17~~ 17
REVISION NUMBER:	-	REVISION DATE:	- 31JAN17
TASK ORDER NUMBER:	DM01	PROJECT NAME / LOCATION:	KAFB, ABQ, NM
PROJECT NUMBER:	62599DM01	PROJECT DESCRIPTION:	KAFB GWTS Expansion
PROJECT MANAGER:	Devon Jercinovic	FIELD QUALITY MANAGER:	Kevin McKelvy
CONSTRUCTION MANAGER:		SITE SAFETY MANAGER:	Pete Ferrari

AM WEATHER:	cool, clear	PM WEATHER:	warm, clear	MAX TEMP (F):	53°		

SUMMARY OF WORK PERFORMED TODAY

Continued programming the HMI

HEALTH AND SAFETY REPORT

SAFETY ACTIONS TAKEN TODAY/SAFETY INSPECTIONS CONDUCTED (Include Observations, Safety Violations, Corrective Instructions Given, Corrective Actions Taken, and Results of Safety Inspections Conducted:

Visual observation, no violations

TAILGATE TOPICS:

Slips, trips, falls, site tidiness, etc.

SAFE BEHAVIOR OBSERVATIONS/SELF-ASSESSMENTS:

Safe behavior observed.

OPERATIONS/PRODUCTION REPORT

WORK FORCE – CONTRACTOR AND SUBCONTRACTOR

Company	Cumulative Total of Work Hours From Previous Report	Total Hours Today	Total Work Hours
Techsas	341	1	342
I+C Solutions	181	10	191

EQUIPMENT ON HAND

Description of Equipment	Make/Model/ Manufacturer	Equipment ID Number	Inspection Performed By
None			

COMMENTS (acceptance status, inspection findings, etc.):

OK

WORK AND/OR TESTS ACCOMPLISHED OR IN PROGRESS

Performed Work/Test for Today: Continued programming the HMI

Planned Work/Test for Tomorrow: Complete punchlist items, alarm verification

Planned Work/Test for Next Week: Construction Complete, Shakedown testing.

CHANGED CONDITIONS/DELAY/CONFLICTS ENCOUNTERED (List any conflicts with the project [i.e., scope of work and/or drawings], delays to the project attributable to site and weather conditions, etc. None

VISITORS AND DISCUSSIONS: Trent and Mark w/ USACE arrived to oversee completed items.

QUALITY CONTROL REPORT

MATERIALS DELIVERED TO JOB SITE

Quantity/Volume/ Weight	Description of Materials Received	Make/Model/ Manufacturer	Material Lot Number	Inspection Performed By
None				

COMMENTS (acceptance status, inspection findings, etc.): NA

INSPECTIONS PERFORMED

Task/Activity Inspected	Inspection Performed	Findings
HMI Programming	Visual Observation	OK

TESTS PERFORMED

Task/Activity Tested	Test Performed	Test Results (Pass/Fail) - Criteria
None		

QUALITY ISSUES AND RESOLUTIONS: None

SUBMITTALS INSPECTION / REVIEW

Submittal No.	Submittal Description	Specification/Plan Reference	Submittal Approved?		Comment/Reason/Action
NA	Daily Report	–	Yes ☐	No ☐	Pending
NA	SBO	–	Yes ☐	No ☐	Pending
NA	PTSP	–	Yes ☐	No ☐	Pending

REGULATORY COMPLIANCE REPORT

PERMIT INSPECTIONS PERFORMED: None

WASTE ACCUMULATION/STOCKPILE AREA INSPECTION

Inspection Performed By:	None			Signature of Inspector:			
Accumulation / Stockpile Area Inspected:							
No of Bins:		No of Tankers		No of Roll-Off Boxes:		No. of Tanks	

Inspection Results: NA

GENERAL COMMENTS

General Comments: (rework, directives, etc.):

OK

ATTACHMENTS

List of Attachments: (examples, as applicable: submittals, meeting minutes, safety meeting minutes, COCs, weight tickets, manifests, profiles, rework item list, RFIs, DCNs, photographs, etc.): Photo log + Safety Documentation

NOTE: Write all entries legibly in ink. Line out all unused portions or designate as "not applicable". Preparer signs first and last name on each completed daily report. This form may be filled out electronically and signed electronically.

PREPARER'S SIGNATURE — DATE: 30JAN17

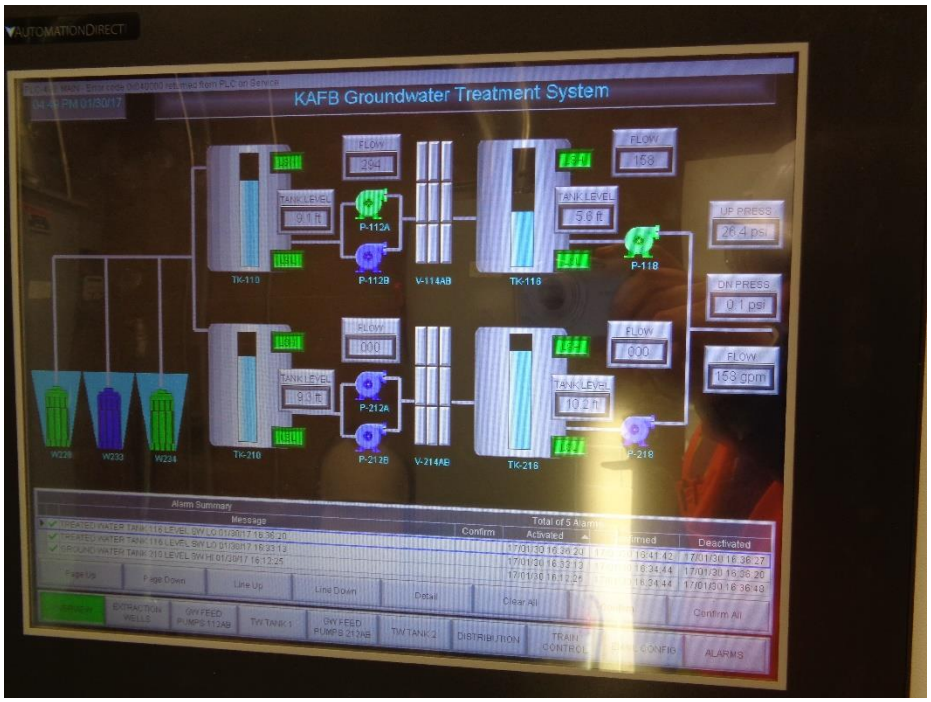

Location: Control Room
Description: HMI Overview Screen (System Operating)
Date: 30 January 2017 Direction: South

Location: Above Control Room Door
Description: System Totalizer Display
Date: 30 January 2017 Direction: East

EA Engineering, Science, and Technology, Inc.

DAILY SAFETY INSPECTION CHECKLIST
(TO BE COMPLETED EACH DAY OF CONSTRUCTION OR HTRW SITE ACTIVITIES)

Site: Bulk Fuel Facility Expansion
Location: HAFB, Bldg 19156
Project No.: 62599ODM01
Client: USACE

Prepared by SSHO: Pete Ferrand
Project Manager: Devon Jerdonek
Date: 1/30/17

Rating	Y	N	N/A	Comments/Immediate Corrective Action[1]
Accident Prevention Plan (APP) and Site Safety and Health Plan (SSHP) General Requirements				
Are there new onsite personnel? • Did they receive pre-entry briefing and are their names recorded in field logbook or daily log? • Was the USACE PM made aware of the new personnel. • Required training and medical surveillance documentation received (e.g., 40-hr, 8 hr, etc.)?		✓		
Did personnel sign in/out of site?	✓			
Daily tailgate safety meetings conducted and documented?	✓			
Were new activities performed today? Were hazards identified, discussed during the daily safety tailgate, and incorporated into revised APP/SSHP?		✓		
New materials brought on site? MSDSs available?		✓		
Exclusion (EZ), Contamination Reduction (CRZ), and Support Zones (SZ) delineated and enforced?			✓	
General housekeeping measures in place to prevent hazards?	✓			
Emergency Planning				
Were there any changes to emergency contact names, telephone numbers, or hospital? If so, were site personnel made aware and was information distributed/reposted.		✓		
Adequate safety equipment inventory available?	✓			
Fire extinguisher available (monthly inspection of extinguisher will suffice)	✓			
Eyewash station(s) functioning and in place (weekly inspection of eye wash station will suffice)?	✓			
First aid supplies available (weekly inspection of first aid kit will suffice)?	✓			
Communication equipment readily available for emergencies?	✓			
Any reported accidents/incidents at this site? If so, were accident reporting procedures followed?		✓		
Air Monitoring				
Monitoring equipment specified in SSHP available and in working order? Air monitoring instrumentation for this site includes – check each if required/on site, note deficiencies in comments: • Combustible gas meter • Organic vapor analyzer • Contaminant specific analyzer for benzene (if total organic vapor concentrations exceed 0.5 ppm)			✓	
Monitoring equipment calibrated and calibration records			✓	

Y = Satisfactory or Yes; N = Unsatisfactory or No, N/A = Not applicable

Rating	Y	N	N/A	Comments/Immediate Corrective Action[1]
available?			✓	
Environmental and personnel monitoring performed as specified in SSHP?			✓	
PPE				
Proper dermal protection worn by EA and subcontracted employees when handling/ contacting hazardous chemicals or contaminated environmental media?	✓			
Required PPE (hard hats, safety boots / shoes, eye protection with side shields, hearing protection) being worn by EA and subcontracted employees?	✓			PF
PPE inspection completed by SSHO?	✓		✓	
Drill Rig Operations				
Daily rig inspection completed? Any equipment problems?			✓	
Drill rigs/elevated equipment maintaining minimum 10-ft distance from energized (50 kV) overhead power lines?			✓	
Investigation-derived Waste (IDW)				
Wastes properly staged, secured, and labeled at end of day?			✓	

Additional Comments:

Peter Juman
Site Safety and Health Officer's Signature

1/30/2017
Date

[1]If a deficiency is noted that cannot be immediately corrected, the SSHO will monitor the progress in correcting the deficiency and will document following:

- Date the deficiency was identified
- Description of the deficiency
- Name of the person responsible for correcting the deficiency
- Projected date of correction
- Actual date of correction.

EA ENGINEERING, SCIENCE AND TECHNOLOGY, INC.
SAFETY MEETING REPORT

Date: 1/30/2017	Time: 0700	Duration of meeting: 5 min	Project #
Location: HAFB Bldg 19150		Task: Programming	

Type of meeting: ✓ Daily ___ Weekly ___ Monthly ___ Other: _____

Items/Issues discussed:

1. Slip, trip fall
2. House Keeping
3.
4.
5.

Attach minutes of safety meeting if taken.

Safety questions/issues raised:	Actions/Follow-up needed:
1.	
2.	
3.	
4.	
5.	
6.	

Remarks:

Meeting conducted by: Peter Jumars

HEALTH AND SAFETY ACTIVITY REPORT

Site: Bulk Fuels Facility Expansion Location: KAFB Bldg 1905

Weather Cond.: Clear, cold Onsite Hours: From 0700 To 1705

Changes in PPE Levels[1]	Work Operations	Reasons for Change
None		

Site Safety and Health Plan Violations	Corrective Action Specified	Corrective Action Taken [2](yes/no)
None		

Observations and Comments:

Completed by: Peter Jenny 1/30/17 Date:
Site Health and Safety Supervisor

[1]Only SSHO may change PPE levels, using only criteria specified in APP/SSHP.
[2]If a deficiency is noted that cannot be immediately corrected, the SSHO will monitor the progress in correcting the deficiency and will document following:

- Date the deficiency was identified
- Description of the deficiency
- Name of the person responsible for correcting the deficiency
- Projected date of correction
- Actual date of correction.

DAILY REPORT

(ATTACH ADDITIONAL SHEETS IF NECESSARY)

CONTRACT NAME:	Kirtland AFB Bulk Fuels Facility Expansion of Dissolved Plume GWTS Design	REPORT NO:	067
CONTRACT NUMBER:	W912DR-12-D-0006	REPORT DATE:	31 JAN 17
REVISION NUMBER:	-	REVISION DATE:	-
TASK ORDER NUMBER:	DM01	PROJECT NAME / LOCATION:	KAFB, ABQ, NM
PROJECT NUMBER:	62599DM01	PROJECT DESCRIPTION:	KAFB GWTS Expansion
PROJECT MANAGER:	Devon Jercinovic	FIELD QUALITY MANAGER:	Kevin McKenzie
CONSTRUCTION MANAGER:	None	SITE SAFETY MANAGER:	Pete Ferrari

AM WEATHER:	Cool, Clear	PM WEATHER:	Cool, Clear	MAX TEMP (F):	59°		

SUMMARY OF WORK PERFORMED TODAY

Complete electrical punchlist items and touchup painting

HEALTH AND SAFETY REPORT

SAFETY ACTIONS TAKEN TODAY/SAFETY INSPECTIONS CONDUCTED (Include Observations, Safety Violations, Corrective Instructions Given, Corrective Actions Taken, and Results of Safety Inspections Conducted:

Visual Observation, No Violations

TAILGATE TOPICS:

Ventilation, knee protection, Lock out Tag out, electric safety, etc.

SAFE BEHAVIOR OBSERVATIONS/SELF-ASSESSMENTS:

Safe behavior observed.

OPERATIONS/PRODUCTION REPORT

WORK FORCE – CONTRACTOR AND SUBCONTRACTOR

Company	Cumulative Total of Work Hours From Previous Report	Total Hours Today	Total Work Hours
Techsas	342	8	350
Wilson Electric	315	4	319

EQUIPMENT ON HAND

Description of Equipment	Make/Model/ Manufacturer	Equipment ID Number	Inspection Performed By
None			

COMMENTS (acceptance status, inspection findings, etc.):

OK

WORK AND/OR TESTS ACCOMPLISHED OR IN PROGRESS

Performed Work/Test for Today:

Completed electrical punchlist items and touchup painting

Planned Work/Test for Tomorrow:

Complete construction and HMI programming.

Planned Work/Test for Next Week:

Shakedown testing

CHANGED CONDITIONS/DELAY/CONFLICTS ENCOUNTERED (List any conflicts with the project [i.e., scope of work and/or drawings], delays to the project attributable to site and weather conditions, etc. None

VISITORS AND DISCUSSIONS: Met with Ground hog to address Well Control House AC Concerns.
Chemega HVAC arrived to inspect HVAC in Control Room.

QUALITY CONTROL REPORT

MATERIALS DELIVERED TO JOB SITE

Quantity/Volume/ Weight	Description of Materials Received	Make/Model/ Manufacturer	Material Lot Number	Inspection Performed By
1Km 3	Skid touch up paint			Km

COMMENTS (acceptance status, inspection findings, etc.): OK

INSPECTIONS PERFORMED

Task/Activity Inspected	Inspection Performed	Findings
Electrical items	Visual Observation	OK
Touch up Paint.	Visual Observation	OK

TESTS PERFORMED

Task/Activity Tested	Test Performed	Test Results (Pass/Fail) - Criteria
None		

QUALITY ISSUES AND RESOLUTIONS: None

SUBMITTALS INSPECTION / REVIEW

Submittal No.	Submittal Description	Specification/Plan Reference	Submittal Approved?		Comment/Reason/Action
NA	Daily Report	–	Yes ☐	No ☐	Pending
NA	SBO	–	Yes ☐	No ☐	Pending
NA	PTSP	–	Yes ☐	No ☐	Pending

REGULATORY COMPLIANCE REPORT

PERMIT INSPECTIONS PERFORMED: None

WASTE ACCUMULATION/STOCKPILE AREA INSPECTION

Inspection Performed By:	NA			Signature of Inspector:			
Accumulation / Stockpile Area Inspected:							
No of Bins:		No of Tankers		No of Roll-Off Boxes:		No. of Tanks	

Inspection Results: NA

GENERAL COMMENTS

General Comments: (rework, directives, etc.):

ATTACHMENTS

List of Attachments: (examples, as applicable: submittals, meeting minutes, safety meeting minutes, COCs, weight tickets, manifests, profiles, rework item list, RFIs, DCNs, photographs, etc.): Photo log and Safety Documentation

NOTE: Write all entries legibly in ink. Line out all unused portions or designate as "not applicable". Preparer signs first and last name on each completed daily report. This form may be filled out electronically and signed electronically.

PREPARER'S SIGNATURE

31 JAN 17

DATE

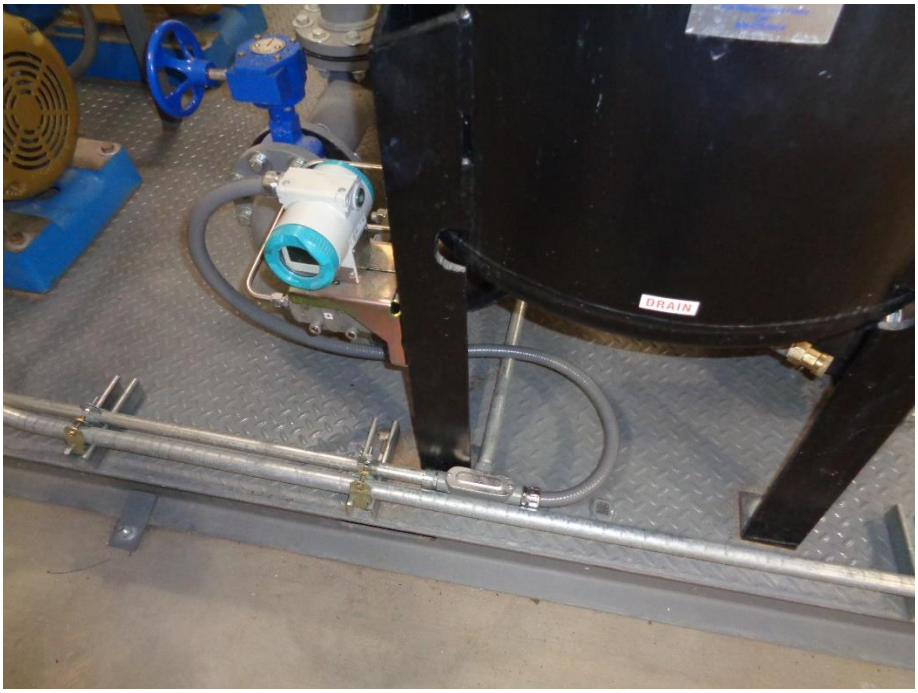

Location: Existing Influent Skid Pump
Description: Replaced Conduit
Date: 31 January 2017 Direction: Down

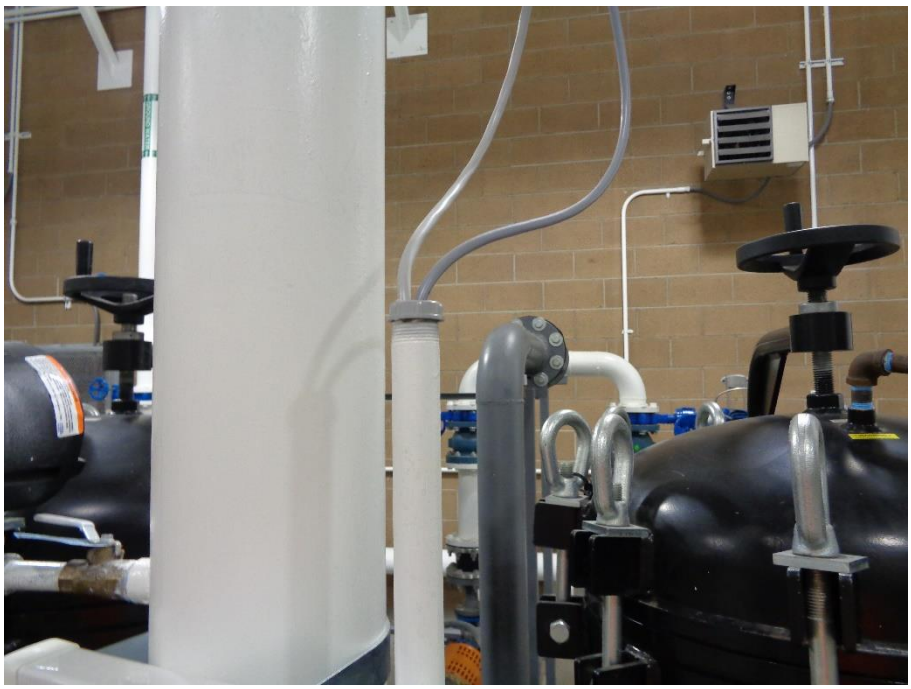

Location: Existing Influent Skid Pump
Description: Replaced Conduit End
Date: 31 January 2017 Direction: North

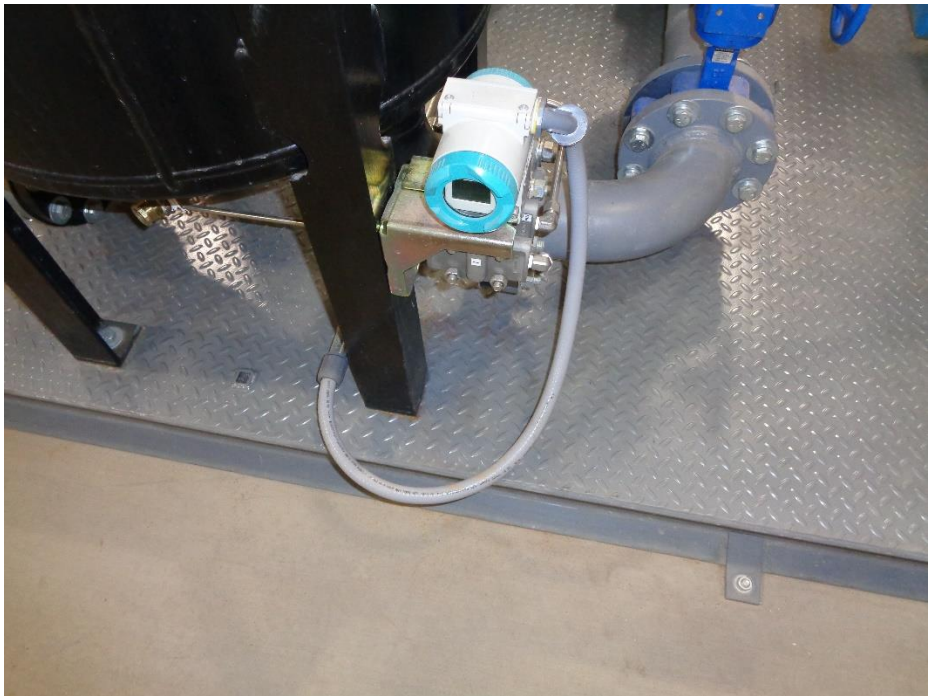

Location: Existing Influent Skid Pump
Description: Replaced Conduit
Date: 31 January 2017 Direction: Down

Location: Existing Influent Skid Pump
Description: Replaced Conduit End
Date: 31 January 2017 Direction: Northeast

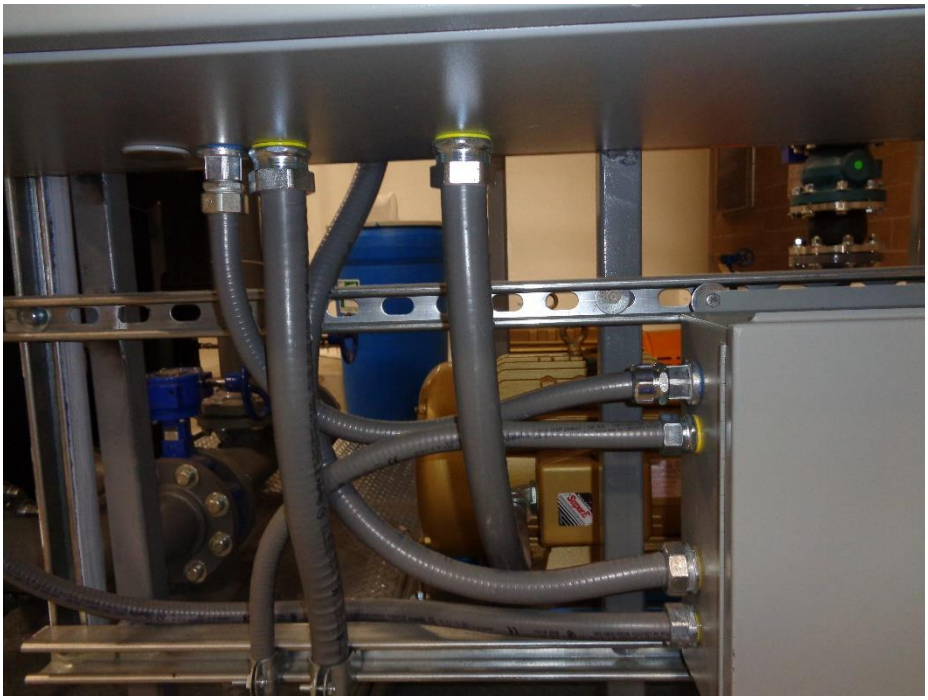

Location: Newly Installed Influent Pump Skid
Description: Replaced Conduit
Date: 31 January 2017 Direction: West

Location: Newly Installed Influent Pump Skid
Description: Replaced Conduit End
Date: 31 January 2017 Direction: Northwest

Location: Newly Installed Influent Pump Skid
Description: Replaced Conduit End
Date: 31 January 2017 Direction: North

Location: Existing Influent Skid Pump
Description: Touch Up Painting
Date: 31 January 2017 Direction: Northwest

Location: Newly Installed Influent Pump Skid
Description: Installed Pressure Gauge
Date: 31 January 2017 Direction: North

Location: Newly Installed Influent Pump Skid
Description: Touch Up Painting
Date: 31 January 2017 Direction: North

Location: Newly Installed Effluent Pump Skid
Description: Replaced Conduit End
Date: 31 January 2017 Direction: West

Location: Newly Installed Effluent Pump Skid
Description: Replaced Conduit End
Date: 31 January 2017 Direction: Up

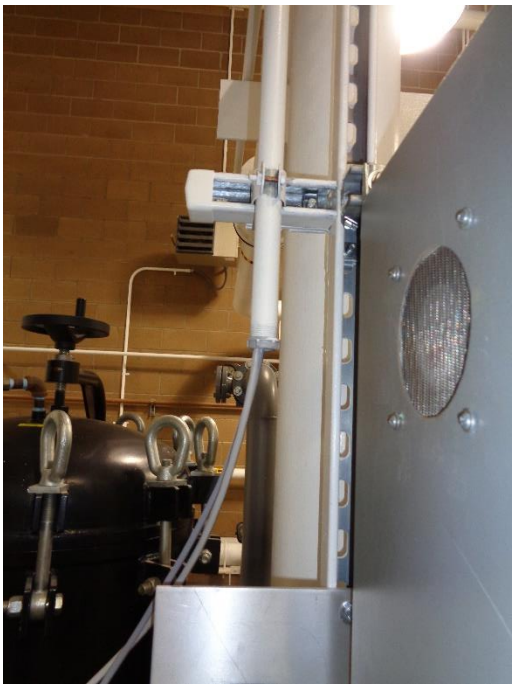

Location: Existing Effluent Pump Skid
Description: Replaced Conduit End
Date: 31 January 2017 Direction: West

Location: Existing Effluent Pump Skid
Description: Replaced Conduit End
Date: 31 January 2017 Direction: North

Location: Newly Installed Effluent Pump Skid
Description: Replaced Conduit
Date: 31 January 2017 Direction: West

Location: Newly Installed GAC Vessel Piping Tree
Description: Touch Up Painting
Date: 31 January 2017 Direction: South

EA Engineering, Science, and Technology, Inc.

DAILY SAFETY INSPECTION CHECKLIST
(TO BE COMPLETED EACH DAY OF CONSTRUCTION OR HTRW SITE ACTIVITIES)

Site: Bulk Fuels Facility Expansion
Location: KAFB – Bldg. 19150
Project No.: 62599DM01
Client: USACE

Prepared by SSHO: Pete Ferrari
Project Manager: Devan Sercinovic
Date: 1-31-2017

Rating	Y	N	N/A	Comments/Immediate Corrective Action[1]
Accident Prevention Plan (APP) and Site Safety and Health Plan (SSHP) General Requirements				
Are there new onsite personnel? • Did they receive pre-entry briefing and are their names recorded in field logbook or daily log? • Was the USACE PM made aware of the new personnel. • Required training and medical surveillance documentation received (e.g., 40-hr, 8 hr, etc.)?				
Did personnel sign in/out of site?				
Daily tailgate safety meetings conducted and documented?				
Were new activities performed today? Were hazards identified, discussed during the daily safety tailgate, and incorporated into revised APP/SSHP?				
New materials brought on site? MSDSs available?				
Exclusion (EZ), Contamination Reduction (CRZ), and Support Zones (SZ) delineated and enforced?				
General housekeeping measures in place to prevent hazards?				
Emergency Planning				
Were there any changes to emergency contact names, telephone numbers, or hospital? If so, were site personnel made aware and was information distributed/reposted.				
Adequate safety equipment inventory available?				
Fire extinguisher available (monthly inspection of extinguisher will suffice)				
Eyewash station(s) functioning and in place (weekly inspection of eye wash station will suffice)?				
First aid supplies available (weekly inspection of first aid kit will suffice)?				
Communication equipment readily available for emergencies?				
Any reported accidents/incidents at this site? If so, were accident reporting procedures followed?				
Air Monitoring				
Monitoring equipment specified in SSHP available and in working order? Air monitoring instrumentation for this site includes – check each if required/on site, note deficiencies in comments: • Combustible gas meter • Organic vapor analyzer • Contaminant specific analyzer for benzene (if total organic vapor concentrations exceed 0.5 ppm)				
Monitoring equipment calibrated and calibration records				

Y = Satisfactory or Yes; N = Unsatisfactory or No, N/A = Not applicable

Rating	Y	N	N/A	Comments/Immediate Corrective Action[1]
available?			/	
Environmental and personnel monitoring performed as specified in SSHP?			/	
PPE				
Proper dermal protection worn by EA and subcontracted employees when handling/ contacting hazardous chemicals or contaminated environmental media?	/			
Required PPE (hard hats, safety boots / shoes, eye protection with side shields, hearing protection) being worn by EA and subcontracted employees?	/			Nitrile gloves were worn during Sump leak detect test
PPE inspection completed by SSHO?	/			
Drill Rig Operations			/	
Daily rig inspection completed? Any equipment problems?			/	
Drill rigs/elevated equipment maintaining minimum 10-ft distance from energized (50 kV) overhead power lines?			/	
Investigation-derived Waste (IDW)			/	
Wastes properly staged, secured, and labeled at end of day?			/	

Additional Comments:

Peter Jensen
Site Safety and Health Officer's Signature

1/31/2017
Date

[1] If a deficiency is noted that cannot be immediately corrected, the SSHO will monitor the progress in correcting the deficiency and will document following:

- Date the deficiency was identified
- Description of the deficiency
- Name of the person responsible for correcting the deficiency
- Projected date of correction
- Actual date of correction.

EA ENGINEERING, SCIENCE AND TECHNOLOGY, INC.
SAFETY MEETING REPORT

Date: 1/31/2017	Time: 0700	Duration of meeting: 5 min	Project #
Location: KAFB BLDG 19150		Task: Paint studs and pipe. Replace conduit (low voltage)	

Type of meeting: ✓ Daily ___ Weekly ___ Monthly ___ Other: _____

Items/Issues discussed:

1. Proper ventilation during painting
2. Knee protection for tape off
3. Power tag-out if entering high
4. voltage panels for conduit replacement.
5.

Attach minutes of safety meeting if taken.

Safety questions/issues raised:	Actions/Follow-up needed:
1.	
2.	
3.	
4.	
5.	
6.	

Remarks:

Meeting conducted by: Peter Durant

HEALTH AND SAFETY ACTIVITY REPORT

Site: Bulk Fuels Facility Expansion Location: HAFB BLDG 19150

Weather Cond.: Clear/cool Onsite Hours: From 0700 To 1600

Changes in PPE Levels[1]	Work Operations	Reasons for Change
No changes		

Site Safety and Health Plan Violations	Corrective Action Specified	Corrective Action Taken[2] (yes/no)
No safety violations		

Observations and Comments:

Completed by: Peter Jensen 1-31-17
Site Health and Safety Supervisor Date:

[1]Only SSHO may change PPE levels, using only criteria specified in APP/SSHP.
[2]If a deficiency is noted that cannot be immediately corrected, the SSHO will monitor the progress in correcting the deficiency and will document following:

- Date the deficiency was identified
- Description of the deficiency
- Name of the person responsible for correcting the deficiency
- Projected date of correction
- Actual date of correction.

DAILY REPORT

(ATTACH ADDITIONAL SHEETS IF NECESSARY)

CONTRACT NAME:	Kirtland AFB Bulk Fuels Facility Expansion of Dissolved Plume GWTS Design	REPORT NO:	068
CONTRACT NUMBER:	W912DR-12-D-0006	REPORT DATE:	01 FEB 17
REVISION NUMBER:	-	REVISION DATE:	-
TASK ORDER NUMBER:	DM01	PROJECT NAME / LOCATION:	KAFB, ABQ NM
PROJECT NUMBER:	62599DM01	PROJECT DESCRIPTION:	KAFB GWTS Expansion
PROJECT MANAGER:	Devon Jercinovic	FIELD QUALITY MANAGER:	Kevin McKeage
CONSTRUCTION MANAGER:	Luke Riet	SITE SAFETY MANAGER:	Pete Ferrari

AM WEATHER:	Cool, Clear	PM WEATHER:	Warm, Clear	MAX TEMP (F):	62°		

SUMMARY OF WORK PERFORMED TODAY

HMI programming, EA Pre final inspection

HEALTH AND SAFETY REPORT

SAFETY ACTIONS TAKEN TODAY/SAFETY INSPECTIONS CONDUCTED (Include Observations, Safety Violations, Corrective Instructions Given, Corrective Actions Taken, and Results of Safety Inspections Conducted:

Visual observation, no violations

TAILGATE TOPICS:

SAFE BEHAVIOR OBSERVATIONS/SELF-ASSESSMENTS:

Safe behavior observed

OPERATIONS/PRODUCTION REPORT

WORK FORCE – CONTRACTOR AND SUBCONTRACTOR

Company	Cumulative Total of Work Hours From Previous Report	Total Hours Today	Total Work Hours
Techsas	350	4	354
I+C Solutions	191	14	205
Wilson Electric	319	1	320

EQUIPMENT ON HAND

Description of Equipment	Make/Model/ Manufacturer	Equipment ID Number	Inspection Performed By
None			

COMMENTS (acceptance status, inspection findings, etc.):

OK

WORK AND/OR TESTS ACCOMPLISHED OR IN PROGRESS

Performed Work/Test for Today:

HMI Programming, EA Pre final Inspection

Planned Work/Test for Tomorrow:

Complete Construction, USACE Final Inspection

Planned Work/Test for Next Week:

Shakedown Testing

CHANGED CONDITIONS/DELAY/CONFLICTS ENCOUNTERED (List any conflicts with the project [i.e., scope of work and/or drawings], delays to the project attributable to site and weather conditions, etc. None

VISITORS AND DISCUSSIONS:

QUALITY CONTROL REPORT

MATERIALS DELIVERED TO JOB SITE

Quantity/Volume/ Weight	Description of Materials Received	Make/Model/ Manufacturer	Material Lot Number	Inspection Performed By
None				

COMMENTS (acceptance status, inspection findings, etc.):

INSPECTIONS PERFORMED

Task/Activity Inspected	Inspection Performed	Findings
HMI Programming	Visual Inspection	OK

TESTS PERFORMED

Task/Activity Tested	Test Performed	Test Results (Pass/Fail) - Criteria
None		

QUALITY ISSUES AND RESOLUTIONS: None

SUBMITTALS INSPECTION / REVIEW

Submittal No.	Submittal Description	Specification/Plan Reference	Submittal Approved?		Comment/Reason/Action
NA	Daily Report	–	Yes ☐	No ☐	Pending
NA	SBO	–	Yes ☐	No ☐	Pending
NA	PTSP	–	Yes ☐	No ☐	Pending

REGULATORY COMPLIANCE REPORT

PERMIT INSPECTIONS PERFORMED: None

WASTE ACCUMULATION/STOCKPILE AREA INSPECTION

Inspection Performed By:	NA			Signature of Inspector:			
Accumulation / Stockpile Area Inspected:							
No of Bins:		No of Tankers		No of Roll-Off Boxes:		No. of Tanks	

Inspection Results: NA

GENERAL COMMENTS

General Comments: (rework, directives, etc.):

ATTACHMENTS

List of Attachments: (examples, as applicable: submittals, meeting minutes, safety meeting minutes, COCs, weight tickets, manifests, profiles, rework item list, RFIs, DCNs, photographs, etc.): Photo log + Safety Documentation

NOTE: Write all entries legibly in ink. Line out all unused portions or designate as "not applicable". Preparer signs first and last name on each completed daily report. This form may be filled out electronically and signed electronically.

PREPARER'S SIGNATURE

01FEB17

DATE

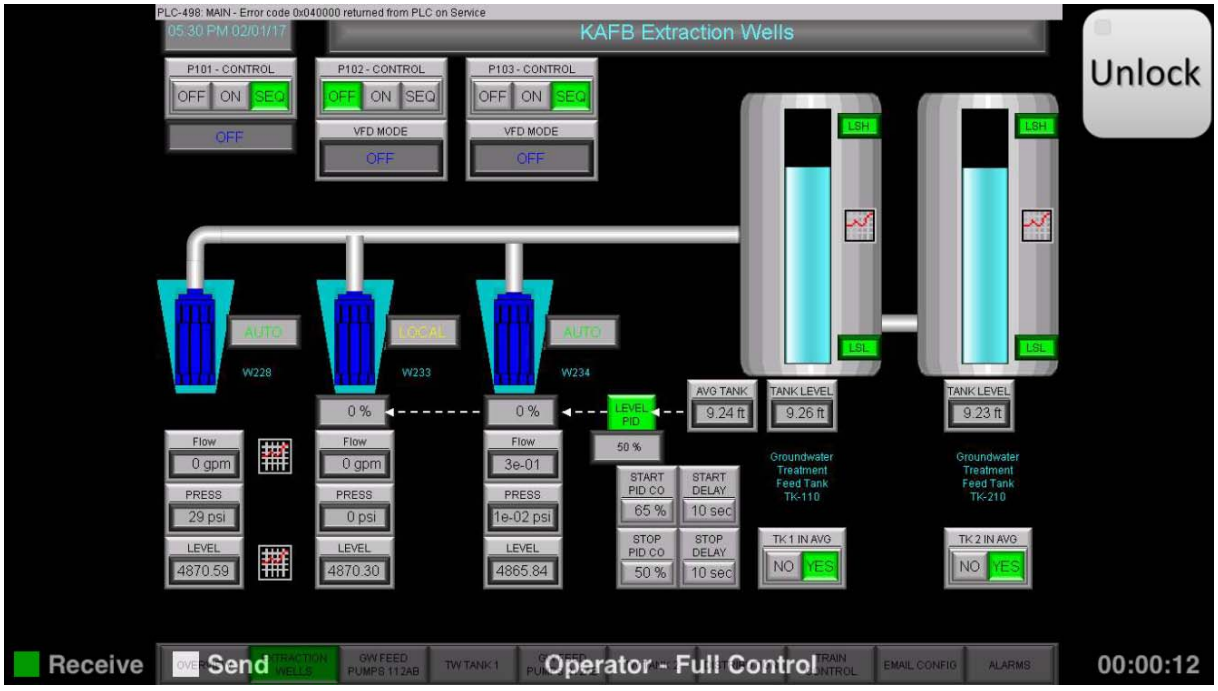

Location: Control Room
Description: HMI Programming (Remote Access)
Date: 01 February 2017 Direction: NA

EA Engineering, Science, and Technology, Inc.

DAILY SAFETY INSPECTION CHECKLIST
(TO BE COMPLETED EACH DAY OF CONSTRUCTION OR HTRW SITE ACTIVITIES)

Site: Bulk Fuels Facil. Ny Expansion
Location: KAFB BLDG 19152
Project No.: 62599DM01
Client: USACE

Prepared by SSHO: Pete Ferran
Project Manager: Devon Jerabek
Date: 2/1/2017

Rating	Y	N	N/A	Comments/Immediate Corrective Action[1]
Accident Prevention Plan (APP) and Site Safety and Health Plan (SSHP) General Requirements				
Are there new onsite personnel? • Did they receive pre-entry briefing and are their names recorded in field logbook or daily log? • Was the USACE PM made aware of the new personnel. • Required training and medical surveillance documentation received (e.g., 40-hr, 8 hr, etc.)?				
Did personnel sign in/out of site?				
Daily tailgate safety meetings conducted and documented?				
Were new activities performed today? Were hazards identified, discussed during the daily safety tailgate, and incorporated into revised APP/SSHP?				
New materials brought on site? MSDSs available?				
Exclusion (EZ), Contamination Reduction (CRZ), and Support Zones (SZ) delineated and enforced?				
General housekeeping measures in place to prevent hazards?				
Emergency Planning				
Were there any changes to emergency contact names, telephone numbers, or hospital? If so, were site personnel made aware and was information distributed/reposted.				
Adequate safety equipment inventory available?				
Fire extinguisher available (monthly inspection of extinguisher will suffice)				
Eyewash station(s) functioning and in place (weekly inspection of eye wash station will suffice)?				
First aid supplies available (weekly inspection of first aid kit will suffice)?				
Communication equipment readily available for emergencies?				
Any reported accidents/incidents at this site? If so, were accident reporting procedures followed?				
Air Monitoring				
Monitoring equipment specified in SSHP available and in working order? Air monitoring instrumentation for this site includes – check each if required/on site, note deficiencies in comments: • Combustible gas meter • Organic vapor analyzer • Contaminant specific analyzer for benzene (if total organic vapor concentrations exceed 0.5 ppm)				
Monitoring equipment calibrated and calibration records				

Y = Satisfactory or Yes; N = Unsatisfactory or No, N/A = Not applicable

Rating	Y	N	N/A	Comments/Immediate Corrective Action[1]
available?				
Environmental and personnel monitoring performed as specified in SSHP?				
PPE				
Proper dermal protection worn by EA and subcontracted employees when handling/ contacting hazardous chemicals or contaminated environmental media?				
Required PPE (hard hats, safety boots / shoes, eye protection with side shields, hearing protection) being worn by EA and subcontracted employees?				
PPE inspection completed by SSHO?				
Drill Rig Operations				
Daily rig inspection completed? Any equipment problems?				
Drill rigs/elevated equipment maintaining minimum 10-ft distance from energized (50 kV) overhead power lines?				
Investigation-derived Waste (IDW)				
Wastes properly staged, secured, and labeled at end of day?				
Additional Comments:				

Site Safety and Health Officer's Signature

2/1/2017
Date

[1]If a deficiency is noted that cannot be immediately corrected, the SSHO will monitor the progress in correcting the deficiency and will document following:

- Date the deficiency was identified
- Description of the deficiency
- Name of the person responsible for correcting the deficiency
- Projected date of correction
- Actual date of correction.

EA ENGINEERING, SCIENCE AND TECHNOLOGY, INC.
SAFETY MEETING REPORT

Date: 2/1/2017	Time: 0915	Duration of meeting: 5 min	Project #
Location: KAFB BLDG 1450		Task: Programming, Replace RS-485,	

Type of meeting: ✓ Daily ___ Weekly ___ Monthly ___ Other: _____

Items/Issues discussed:

1. Lock - out tag - out for discharge shed
2. control panel entry (Repeat RS-485
3. connector)
4.
5.

Attach minutes of safety meeting if taken.

Safety questions/issues raised:	Actions/Follow-up needed:
1.	
2.	
3.	
4.	
5.	
6.	

Remarks:

Meeting conducted by: Peter Jensen

HEALTH AND SAFETY ACTIVITY REPORT

Site: Bulk Fuels Facility Expansion Location KAFB- BLDG 19150

Weather Cond.: Clear/cool Onsite Hours: From 0700 To 1200

Changes in PPE Levels[1]	Work Operations	Reasons for Change
No changes		

Site Safety and Health Plan Violations	Corrective Action Specified	Corrective Action Taken[2] (yes/no)
No safety violations		

Observations and Comments:

Completed by: Petra Juranj 2-1-2017 Date:
Site Health and Safety Supervisor

[1]Only SSHO may change PPE levels, using only criteria specified in APP/SSHP.
[2]If a deficiency is noted that cannot be immediately corrected, the SSHO will monitor the progress in correcting the deficiency and will document following:

- Date the deficiency was identified
- Description of the deficiency
- Name of the person responsible for correcting the deficiency
- Projected date of correction
- Actual date of correction.

DAILY REPORT

(ATTACH ADDITIONAL SHEETS IF NECESSARY)

CONTRACT NAME:	Kirtland AFB Bulk Fuels Facility Expansion of Dissolved Plume GWTS Design	REPORT NO:	069
CONTRACT NUMBER:	W912DR-12-D-0006	REPORT DATE:	02 FEB 17
REVISION NUMBER:	-	REVISION DATE:	-
TASK ORDER NUMBER:	DM01	PROJECT NAME / LOCATION:	KAFB, ABQ, NM
PROJECT NUMBER:	62599DM01	PROJECT DESCRIPTION:	KAFB GWTS Expansion
PROJECT MANAGER:	Devon Jercinovic	FIELD QUALITY MANAGER:	Kevin McKeague
CONSTRUCTION MANAGER:	Luke Riet	SITE SAFETY MANAGER:	Pete Ferrari

AM WEATHER:	Cool Clear	PM WEATHER:	Cool Clear	MAX TEMP (F):	57°		

SUMMARY OF WORK PERFORMED TODAY

Final Construction Punch list Items, USACE Final Contraction Inspection

HEALTH AND SAFETY REPORT

SAFETY ACTIONS TAKEN TODAY/SAFETY INSPECTIONS CONDUCTED (Include Observations, Safety Violations, Corrective Instructions Given, Corrective Actions Taken, and Results of Safety Inspections Conducted:

Visual observation, no violations

TAILGATE TOPICS:

~~Safe behavior~~ Ism Ladder Safety, Slips, Trips, and Falls.

SAFE BEHAVIOR OBSERVATIONS/SELF-ASSESSMENTS:

Safe behavior observed

OPERATIONS/PRODUCTION REPORT

WORK FORCE – CONTRACTOR AND SUBCONTRACTOR

Company	Cumulative Total of Work Hours From Previous Report	Total Hours Today	Total Work Hours
Tahsas	354	8	362
Wilson Electric	320	3	323
I+C Solutions	205	4	209

EQUIPMENT ON HAND

Description of Equipment	Make/Model/ Manufacturer	Equipment ID Number	Inspection Performed By
None			

COMMENTS (acceptance status, inspection findings, etc.):

OK

WORK AND/OR TESTS ACCOMPLISHED OR IN PROGRESS

Performed Work/Test for Today:

Final Punchlist items, USACE Final Construction Inspection

Planned Work/Test for Tomorrow:

Begin Shakedown Testing

Planned Work/Test for Next Week:

Continue Shakedown Testing

CHANGED CONDITIONS/DELAY/CONFLICTS ENCOUNTERED (List any conflicts with the project [i.e., scope of work and/or drawings], delays to the project attributable to site and weather conditions, etc. None

VISITORS AND DISCUSSIONS: Trent and Amy were on site to perform the USACE Final Inspection

QUALITY CONTROL REPORT

MATERIALS DELIVERED TO JOB SITE

Quantity/Volume/ Weight	Description of Materials Received	Make/Model/ Manufacturer	Material Lot Number	Inspection Performed By
None				

COMMENTS (acceptance status, inspection findings, etc.): NA

INSPECTIONS PERFORMED

Task/Activity Inspected	Inspection Performed	Findings
Electrical Conduit Replace	Visual Inspection	OK
Flow meter Rewiring	Visual Inspection	OK

TESTS PERFORMED

Task/Activity Tested	Test Performed	Test Results (Pass/Fail) - Criteria
Initial Start Up	Initialized Train 2	Will Complete Tomorrow

QUALITY ISSUES AND RESOLUTIONS: None

SUBMITTALS INSPECTION / REVIEW

Submittal No.	Submittal Description	Specification/Plan Reference	Submittal Approved?		Comment/Reason/Action
NA	Daily Report	-	Yes ☐	No ☐	Pending
NA	SBO	-	Yes ☐	No ☐	Pending
NA	PTSP	-	Yes ☐	No ☐	Pending

REGULATORY COMPLIANCE REPORT							
PERMIT INSPECTIONS PERFORMED: None							
WASTE ACCUMULATION/STOCKPILE AREA INSPECTION							
Inspection Performed By:	NA			Signature of Inspector:			
Accumulation / Stockpile Area Inspected:							
No of Bins:		No of Tankers		No of Roll-Off Boxes:		No. of Tanks	
Inspection Results: NA							
GENERAL COMMENTS							
General Comments: (rework, directives, etc.):							
ATTACHMENTS							
List of Attachments: (examples, as applicable: submittals, meeting minutes, safety meeting minutes, COCs, weight tickets, manifests, profiles, rework item list, RFIs, DCNs, photographs, etc.): Photo log and safety documentation							
NOTE: Write all entries legibly in ink. Line out all unused portions or designate as "not applicable". Preparer signs first and last name on each completed daily report. This form may be filled out electronically and signed electronically.				PREPARER'S SIGNATURE		02 FEB 17 DATE	

Location: Existing Influent Pump Skid
Description: Replaced Conduit
Date: 02 February 2017 Direction: Down

Location: Newly Installed Influent Pump Skid
Description: Rewired Flowmeter
Date: 02 February 2017 Direction: Northwest

EA Engineering, Science, and Technology, Inc.

DAILY SAFETY INSPECTION CHECKLIST (TO BE COMPLETED EACH DAY OF CONSTRUCTION OR HTRW SITE ACTIVITIES)

Site: KAFB Bulk Fuels Facility Expansion
Location: KAFB Bldg. 19150
Project No.:
Client: USACE

Prepared by SSHO: Pete Ferrari
Project Manager: Devon Jerabnovic
Date: 2/2/2017

Rating	Y	N	N/A	Comments/Immediate Corrective Action[1]
Accident Prevention Plan (APP) and Site Safety and Health Plan (SSHP) General Requirements				
Are there new onsite personnel? • Did they receive pre-entry briefing and are their names recorded in field logbook or daily log? • Was the USACE PM made aware of the new personnel. • Required training and medical surveillance documentation received (e.g., 40-hr, 8 hr, etc.)?		✓	✓	
Did personnel sign in/out of site?	✓			
Daily tailgate safety meetings conducted and documented?	✓			
Were new activities performed today? Were hazards identified, discussed during the daily safety tailgate, and incorporated into revised APP/SSHP?		✓	✓	
New materials brought on site? MSDSs available?		✓		
Exclusion (EZ), Contamination Reduction (CRZ), and Support Zones (SZ) delineated and enforced?			✓	
General housekeeping measures in place to prevent hazards?	✓			
Emergency Planning				
Were there any changes to emergency contact names, telephone numbers, or hospital? If so, were site personnel made aware and was information distributed/reposted.		✓		
Adequate safety equipment inventory available?	✓			
Fire extinguisher available (monthly inspection of extinguisher will suffice)	✓			
Eyewash station(s) functioning and in place (weekly inspection of eye wash station will suffice)?	✓			
First aid supplies available (weekly inspection of first aid kit will suffice)?	✓			
Communication equipment readily available for emergencies?	✓			
Any reported accidents/incidents at this site? If so, were accident reporting procedures followed?		✓		
Air Monitoring				
Monitoring equipment specified in SSHP available and in working order? Air monitoring instrumentation for this site includes – check each if required/on site, note deficiencies in comments: • Combustible gas meter • Organic vapor analyzer • Contaminant specific analyzer for benzene (if total organic vapor concentrations exceed 0.5 ppm)			✓	
Monitoring equipment calibrated and calibration records			✓	

Y = Satisfactory or Yes; N = Unsatisfactory or No, N/A = Not applicable

Rating	Y	N	N/A	Comments/Immediate Corrective Action[1]
available?			/	
Environmental and personnel monitoring performed as specified in SSHP?			/	
PPE				
Proper dermal protection worn by EA and subcontracted employees when handling/ contacting hazardous chemicals or contaminated environmental media?			/	
Required PPE (hard hats, safety boots / shoes, eye protection with side shields, hearing protection) being worn by EA and subcontracted employees?	/			
PPE inspection completed by SSHO?	/			
Drill Rig Operations				
Daily rig inspection completed? Any equipment problems?			/	
Drill rigs/elevated equipment maintaining minimum 10-ft distance from energized (50 kV) overhead power lines?			/	
Investigation-derived Waste (IDW)				
Wastes properly staged, secured, and labeled at end of day?			/	

Additional Comments:

Peter Fenard
Site Safety and Health Officer's Signature

2/2/2017
Date

[1]If a deficiency is noted that cannot be immediately corrected, the SSHO will monitor the progress in correcting the deficiency and will document following:

- Date the deficiency was identified
- Description of the deficiency
- Name of the person responsible for correcting the deficiency
- Projected date of correction
- Actual date of correction.

EA ENGINEERING, SCIENCE AND TECHNOLOGY, INC.
SAFETY MEETING REPORT

Date: 2/2/2017	Time: 0840	Duration of meeting: 5 min	Project #
Location: MAFB Bldg 19150		Task: Touch up paint, cleaning conduit replacement, New PROM	

Type of meeting: ___ Daily ___ Weekly ___ Monthly ___ Other: _____

Items/Issues discussed:

1. Aware of ladder safety
2. Slip, trip falls (particularly over sump)
3.
4.
5.

Attach minutes of safety meeting if taken.

Safety questions/issues raised:	Actions/Follow-up needed:
1.	
2.	
3.	
4.	
5.	
6.	

Remarks:

Meeting conducted by:
Peter Jumars

HEALTH AND SAFETY ACTIVITY REPORT

Site: KAFB Bulk Fuels Facility Expansion Location: KAFB Bldg. 19150

Weather Cond.: Cool, clear Onsite Hours: From 0700 To 1530

Changes in PPE Levels[1]	Work Operations	Reasons for Change
None		

Site Safety and Health Plan Violations	Corrective Action Specified	Corrective Action Taken[2] (yes/no)
No violations		

Observations and Comments:

Completed by: Peter Durnan 2/2/2017
Site Health and Safety Supervisor Date:

[1] Only SSHO may change PPE levels, using only criteria specified in APP/SSHP.
[2] If a deficiency is noted that cannot be immediately corrected, the SSHO will monitor the progress in correcting the deficiency and will document following:

- Date the deficiency was identified
- Description of the deficiency
- Name of the person responsible for correcting the deficiency
- Projected date of correction
- Actual date of correction.

DAILY REPORT

(ATTACH ADDITIONAL SHEETS IF NECESSARY)

CONTRACT NAME:	Kirtland AFB Bulk Fuels Facility Expansion of Dissolved Plume GWTS Design	REPORT NO:	070
CONTRACT NUMBER:	W912DR-12-D-0006	REPORT DATE:	03 FEB 17
REVISION NUMBER:	-	REVISION DATE:	-
TASK ORDER NUMBER:	DM01	PROJECT NAME / LOCATION:	KAFB, ABQ, NM
PROJECT NUMBER:	62599DM01	PROJECT DESCRIPTION:	KAFB GWTS Expansion
PROJECT MANAGER:	Devon Jercinovic	FIELD QUALITY MANAGER:	Kevin McKeon
CONSTRUCTION MANAGER:	None	SITE SAFETY MANAGER:	Peter Ferrari

AM WEATHER:	Cool clear	PM WEATHER:	Warm cloudy	MAX TEMP (F):	60°		

SUMMARY OF WORK PERFORMED TODAY

Final programming and installation of EPROM chips on influent Skid

HEALTH AND SAFETY REPORT

SAFETY ACTIONS TAKEN TODAY/SAFETY INSPECTIONS CONDUCTED (Include Observations, Safety Violations, Corrective Instructions Given, Corrective Actions Taken, and Results of Safety Inspections Conducted:

Visual Observation, No Violations

TAILGATE TOPICS:

Slips, trips, and falls, low voltage safety.

SAFE BEHAVIOR OBSERVATIONS/SELF-ASSESSMENTS:

Safe Behavior Observed.

OPERATIONS/PRODUCTION REPORT

WORK FORCE – CONTRACTOR AND SUBCONTRACTOR

Company	Cumulative Total of Work Hours From Previous Report	Total Hours Today	Total Work Hours
I+C Solutions	209	4	213

EQUIPMENT ON HAND

Description of Equipment	Make/Model/ Manufacturer	Equipment ID Number	Inspection Performed By
None			

COMMENTS (acceptance status, inspection findings, etc.):

OK

WORK AND/OR TESTS ACCOMPLISHED OR IN PROGRESS

Performed Work/Test for Today:

Final Programming and installation of EPROM chip on the inbound skid.

Planned Work/Test for Tomorrow:

None

Planned Work/Test for Next Week:

Shakedown Testing

CHANGED CONDITIONS/DELAY/CONFLICTS ENCOUNTERED (List any conflicts with the project [i.e., scope of work and/or drawings], delays to the project attributable to site and weather conditions, etc. None

VISITORS AND DISCUSSIONS: None

QUALITY CONTROL REPORT

MATERIALS DELIVERED TO JOB SITE

Quantity/Volume/ Weight	Description of Materials Received	Make/Model/ Manufacturer	Material Lot Number	Inspection Performed By
~~None~~ Qty 1	Replacement EPROM Chip	Siemens		KM

COMMENTS (acceptance status, inspection findings, etc.): None

INSPECTIONS PERFORMED

Task/Activity Inspected	Inspection Performed	Findings
Programming + Install	Visual Inspection	OK

TESTS PERFORMED

Task/Activity Tested	Test Performed	Test Results (Pass/Fail) - Criteria
None		

QUALITY ISSUES AND RESOLUTIONS: None

SUBMITTALS INSPECTION / REVIEW

Submittal No.	Submittal Description	Specification/Plan Reference	Submittal Approved?		Comment/Reason/Action
NA	Daily Report	–	Yes ☐	No ☐	Pending
NA	SBO	–	Yes ☐	No ☐	Pending
NA	PTSP	–	Yes ☐	No ☐	Pending

REGULATORY COMPLIANCE REPORT

PERMIT INSPECTIONS PERFORMED: None

WASTE ACCUMULATION/STOCKPILE AREA INSPECTION

Inspection Performed By:	NA	Signature of Inspector:			
Accumulation / Stockpile Area Inspected:					
No of Bins:		No of Tankers		No of Roll-Off Boxes:		No. of Tanks	

Inspection Results: NA

GENERAL COMMENTS

General Comments: (rework, directives, etc.):

ATTACHMENTS

List of Attachments: (examples, as applicable: submittals, meeting minutes, safety meeting minutes, COCs, weight tickets, manifests, profiles, rework item list, RFIs, DCNs, photographs, etc.): Photolog + Safety Documentation

NOTE: Write all entries legibly in ink. Line out all unused portions or designate as "not applicable". Preparer signs first and last name on each completed daily report. This form may be filled out electronically and signed electronically.

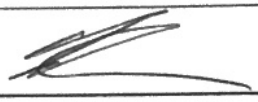

PREPARER'S SIGNATURE

03FEB17

DATE

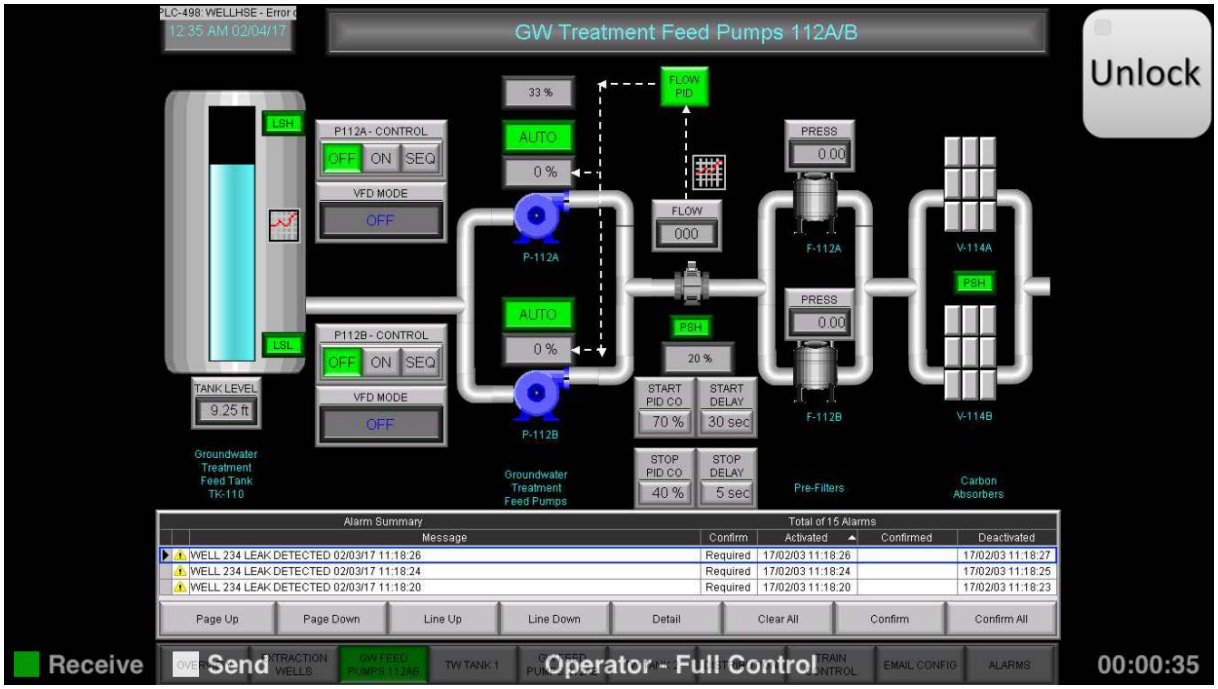

Location: Control Room
Description: HMI Programming with Replaced Flow Transmitter Component
Date: 03 February 2017 Direction: NA

EA Engineering, Science, and Technology, Inc

DAILY SAFETY INSPECTION CHECKLIST
(TO BE COMPLETED EACH DAY OF CONSTRUCTION OR HTRW SITE ACTIVITIES)

Site: KAFB Bulk Fuel Facility Expansion
Location: KAFB Bldg 1958
Project No.: 62599A409
Client: USACE

Prepared by SSHO: 55th Pete Fierro
Project Manager: Dawn Jergbauer
Date: 2/2/2017

Rating	Y	N	N/A	Comments/Immediate Corrective Action[1]
Accident Prevention Plan (APP) and Site Safety and Health Plan (SSHP) General Requirements				
Are there new onsite personnel? • Did they receive pre-entry briefing and are their names recorded in field logbook or daily log? • Was the USACE PM made aware of the new personnel. • Required training and medical surveillance documentation received (e.g., 40-hr, 8 hr, etc.)?			✓	
Did personnel sign in/out of site?	✓			
Daily tailgate safety meetings conducted and documented?	✓			
Were new activities performed today? Were hazards identified, discussed during the daily safety tailgate, and incorporated into revised APP/SSHP?		✓		
New materials brought on site? MSDSs available?		✓		
Exclusion (EZ), Contamination Reduction (CRZ), and Support Zones (SZ) delineated and enforced?			✓	
General housekeeping measures in place to prevent hazards?	✓			
Emergency Planning				
Were there any changes to emergency contact names, telephone numbers, or hospital? If so, were site personnel made aware and was information distributed/reposted.		✓		
Adequate safety equipment inventory available?	✓			
Fire extinguisher available (monthly inspection of extinguisher will suffice)	✓			
Eyewash station(s) functioning and in place (weekly inspection of eye wash station will suffice)?	✓			
First aid supplies available (weekly inspection of first aid kit will suffice)?	✓			
Communication equipment readily available for emergencies?	✓			
Any reported accidents/incidents at this site? If so, were accident reporting procedures followed?		✓		
Air Monitoring				
Monitoring equipment specified in SSHP available and in working order? Air monitoring instrumentation for this site includes – check each if required/on site, note deficiencies in comments: • Combustible gas meter • Organic vapor analyzer • Contaminant specific analyzer for benzene (if total organic vapor concentrations exceed 0.5 ppm)			✓	
Monitoring equipment calibrated and calibration records			✓	

Y = Satisfactory or Yes. N = Unsatisfactory or No. N/A = Not applicable

Rating	Y	N	N/A	Comments/Immediate Corrective Action[1]
available?			✓	
Environmental and personnel monitoring performed as specified in SSHP?			✓	
PPE				
Proper dermal protection worn by EA and subcontracted employees when handling/ contacting hazardous chemicals or contaminated environmental media?			✓	
Required PPE (hard hats, safety boots / shoes, eye protection with side shields, hearing protection) being worn by EA and subcontracted employees?	✓			
PPE inspection completed by SSHO?	✓			
Drill Rig Operations				
Daily rig inspection completed? Any equipment problems?			✓	
Drill rigs/elevated equipment maintaining minimum 10-ft distance from energized (50 kV) overhead power lines?			✓	
Investigation-derived Waste (IDW)				
Wastes properly staged, secured, and labeled at end of day?			✓	

Additional Comments:

Peter Dunn
Site Safety and Health Officer's Signature

2/3/2017
Date

[1] If a deficiency is noted that cannot be immediately corrected, the SSHO will monitor the progress in correcting the deficiency and will document following:

- Date the deficiency was identified
- Description of the deficiency
- Name of the person responsible for correcting the deficiency
- Projected date of correction
- Actual date of correction.

EA ENGINEERING, SCIENCE AND TECHNOLOGY, INC.
SAFETY MEETING REPORT

Date: 2/3/2017	Time: 0715	Duration of meeting: 5 min	Project #
Location: MAFB Bldg. 19150		Task: programming and EPROMs installed	

Type of meeting: ___ Daily ___ Weekly ___ Monthly ___ Other: _____

Items/Issues discussed:

1. Slip trip, falls,
2. low voltage safety
3.
4.
5.

Attach minutes of safety meeting if taken.

Safety questions/issues raised:	Actions/Follow-up needed:
1.	
2.	
3.	
4.	
5.	
6.	

Remarks:

Meeting conducted by:

Peter Furman

HEALTH AND SAFETY ACTIVITY REPORT

Site: KAFB Bulk Fuels Facility Eqp Location: Bldg 19150

Weather Cond., Clear / warm Onsite Hours: From 0700 To 1400

Changes in PPE Levels[1]	Work Operations	Reasons for Change
No changes		

Site Safety and Health Plan Violations	Corrective Action Specified	Corrective Action Taken[2] (yes/no)
No safety violations		

Observations and Comments:

Completed by: Peter Fenwood 2/3/2017 Date:
Site Health and Safety Supervisor

[1]Only SSHO may change PPE levels, using only criteria specified in APP/SSHP.
[2]If a deficiency is noted that cannot be immediately corrected, the SSHO will monitor the progress in correcting the deficiency and will document following:

- Date the deficiency was identified
- Description of the deficiency
- Name of the person responsible for correcting the deficiency
- Projected date of correction
- Actual date of correction.

DAILY REPORT

(ATTACH ADDITIONAL SHEETS IF NECESSARY)

CONTRACT NAME:	Kirtland AFB Bulk Fuels Facility Expansion of Dissolved Plume GWTS Design	REPORT NO:	071
CONTRACT NUMBER:	W912DR-12-D-0006	REPORT DATE:	28FEB17
REVISION NUMBER:	-	REVISION DATE:	-
TASK ORDER NUMBER:	DM01	PROJECT NAME / LOCATION:	KAFB, ABQ, NM
PROJECT NUMBER:	62599DM01	PROJECT DESCRIPTION:	KAFB GWTS Expansion
PROJECT MANAGER:	Devon Jercinovic	FIELD QUALITY MANAGER:	Kevin McKeage
CONSTRUCTION MANAGER:	None	SITE SAFETY MANAGER:	Peter Ferrari

AM WEATHER:	Cool cloudy Breezy	PM WEATHER:	Warm partly cloudy, windy	MAX TEMP (F):	58°		

SUMMARY OF WORK PERFORMED TODAY

Installed Conduit for Well KAFB-7 Flowmeter.

HEALTH AND SAFETY REPORT

SAFETY ACTIONS TAKEN TODAY/SAFETY INSPECTIONS CONDUCTED (Include Observations, Safety Violations, Corrective Instructions Given, Corrective Actions Taken, and Results of Safety Inspections Conducted:

Visual Observation, No Violations

TAILGATE TOPICS:

Hand tool use, Slips, trips, falls, and trenching.

SAFE BEHAVIOR OBSERVATIONS/SELF-ASSESSMENTS:

Safe behavior observed.

OPERATIONS/PRODUCTION REPORT

WORK FORCE – CONTRACTOR AND SUBCONTRACTOR

Company	Cumulative Total of Work Hours From Previous Report	Total Hours Today	Total Work Hours
Techsas	362 -3km	3	365
Wilson Electric	323	9	332

EQUIPMENT ON HAND

Description of Equipment	Make/Model/ Manufacturer	Equipment ID Number	Inspection Performed By
None			

COMMENTS (acceptance status, inspection findings, etc.):

OK

WORK AND/OR TESTS ACCOMPLISHED OR IN PROGRESS

Performed Work/Test for Today:

Installed Conduit for Well KAFB-7 flow meter.

Planned Work/Test for Tomorrow:

None

Planned Work/Test for Next Week:

None

CHANGED CONDITIONS/DELAY/CONFLICTS ENCOUNTERED (List any conflicts with the project [i.e., scope of work and/or drawings], delays to the project attributable to site and weather conditions, etc. None

VISITORS AND DISCUSSIONS: None

QUALITY CONTROL REPORT

MATERIALS DELIVERED TO JOB SITE

Quantity/Volume/ Weight	Description of Materials Received	Make/Model/ Manufacturer	Material Lot Number	Inspection Performed By
3	Metallic Conduit			KM
1	Conduit wrap			KM
Various	Conduit fittings and couplings			KM

COMMENTS (acceptance status, inspection findings, etc.): OK

INSPECTIONS PERFORMED

Task/Activity Inspected	Inspection Performed	Findings
Conduit Install	Visual observation	OK

TESTS PERFORMED

Task/Activity Tested	Test Performed	Test Results (Pass/Fail) - Criteria
None		

QUALITY ISSUES AND RESOLUTIONS: None

SUBMITTALS INSPECTION / REVIEW

Submittal No.	Submittal Description	Specification/Plan Reference	Submittal Approved?		Comment/Reason/Action
NA	Daily Report	–	Yes ☐	No ☐	Pending
NA	SBO	–	Yes ☐	No ☐	Pending
NA	PTSP	–	Yes ☐	No ☐	Pending

REGULATORY COMPLIANCE REPORT							
PERMIT INSPECTIONS PERFORMED: None							
WASTE ACCUMULATION/STOCKPILE AREA INSPECTION							
Inspection Performed By:	NA			Signature of Inspector:			
Accumulation / Stockpile Area Inspected:							
No of Bins:		No of Tankers		No of Roll-Off Boxes:		No. of Tanks	
Inspection Results: NA							
GENERAL COMMENTS							
General Comments: (rework, directives, etc.): None							
ATTACHMENTS							
List of Attachments: (examples, as applicable: submittals, meeting minutes, safety meeting minutes, COCs, weight tickets, manifests, profiles, rework item list, RFIs, DCNs, photographs, etc.): Photo log and attached safety documentation							
NOTE: Write all entries legibly in ink. Line out all unused portions or designate as "not applicable". Preparer signs first and last name on each completed daily report. This form may be filled out electronically and signed electronically.				PREPARER'S SIGNATURE		DATE: 28 FEB 17	

Location: KAFB-7 South of Gate
Description: Conduit and Components Delivered
Date: 28 February 2017 Direction: East

Location: KAFB-7 Between Well House and Panel Pad
Description: Hand Excavated Trench
Date: 28 February 2017 Direction: Southeast

Location: KAFB-7 Between Well House and Panel Pad
Description: Hand Excavated Trench
Date: 28 February 2017 Direction: West

Location: KAFB-7 Between Well House and Panel Pad
Description: Installed Conduit in Trench
Date: 28 February 2017 Direction: West

Location: KAFB-7 Between Well House and Panel Pad
Description: Completed and Buried Conduit
Date: 28 February 2017 Direction: West

EA Engineering, Science, and Technology, Inc.

DAILY SAFETY INSPECTION CHECKLIST (TO BE COMPLETED EACH DAY OF CONSTRUCTION OR HTRW SITE ACTIVITIES)

Site: KAFB BFF GWTS Expansion
Location: Building 19150 1601 Walker St.
Project No.: 62599 DM01
Client: USACE

Prepared by SSHO: Peter Ferrari
Project Manager: Devan Jercinovic
Date: 2/28/2017

Rating	Y	N	N/A	Comments/Immediate Corrective Action[1]
Accident Prevention Plan (APP) and Site Safety and Health Plan (SSHP) General Requirements				
Are there new onsite personnel? • Did they receive pre-entry briefing and are their names recorded in field logbook or daily log? • Was the USACE PM made aware of the new personnel. • Required training and medical surveillance documentation received (e.g., 40-hr, 8 hr, etc.)?		✓	✓	
Did personnel sign in/out of site?	✓			
Daily tailgate safety meetings conducted and documented?	✓			
Were new activities performed today? Were hazards identified, discussed during the daily safety tailgate, and incorporated into revised APP/SSHP?	✓			Trenching for conduit install at Well-7
New materials brought on site? MSDSs available?		✓		
Exclusion (EZ), Contamination Reduction (CRZ), and Support Zones (SZ) delineated and enforced?	✓			
General housekeeping measures in place to prevent hazards?	✓			
Emergency Planning				
Were there any changes to emergency contact names, telephone numbers, or hospital? If so, were site personnel made aware and was information distributed/reposted.		✓	✓	
Adequate safety equipment inventory available?	✓			
Fire extinguisher available (monthly inspection of extinguisher will suffice)	✓			
Eyewash station(s) functioning and in place (weekly inspection of eye wash station will suffice)?	✓			
First aid supplies available (weekly inspection of first aid kit will suffice)?	✓			
Communication equipment readily available for emergencies?	✓			
Any reported accidents/incidents at this site? If so, were accident reporting procedures followed?		✓		
Air Monitoring				
Monitoring equipment specified in SSHP available and in working order? Air monitoring instrumentation for this site includes – check each if required/on site, note deficiencies in comments: • Combustible gas meter • Organic vapor analyzer • Contaminant specific analyzer for benzene (if total organic vapor concentrations exceed 0.5 ppm)			✓	
Monitoring equipment calibrated and calibration records			✓	

Y = Satisfactory or Yes; N = Unsatisfactory or No, N/A = Not applicable

Rating	Y	N	N/A	Comments/Immediate Corrective Action[1]
available?				
Environmental and personnel monitoring performed as specified in SSHP?			✓	
PPE				
Proper dermal protection worn by EA and subcontracted employees when handling/ contacting hazardous chemicals or contaminated environmental media?	✓			
Required PPE (hard hats, safety boots / shoes, eye protection with side shields, hearing protection) being worn by EA and subcontracted employees?	✓			
PPE inspection completed by SSHO?	✓			
Drill Rig Operations				
Daily rig inspection completed? Any equipment problems?			✓	
Drill rigs/elevated equipment maintaining minimum 10-ft distance from energized (50 kV) overhead power lines?			✓	
Investigation-derived Waste (IDW)				
Wastes properly staged, secured, and labeled at end of day?			✓	

Additional Comments:

Peter Ferraro
Site Safety and Health Officer's Signature

2/28/2017
Date

[1]If a deficiency is noted that cannot be immediately corrected, the SSHO will monitor the progress in correcting the deficiency and will document following:

- Date the deficiency was identified
- Description of the deficiency
- Name of the person responsible for correcting the deficiency
- Projected date of correction
- Actual date of correction.

EA ENGINEERING, SCIENCE AND TECHNOLOGY, INC.
SAFETY MEETING REPORT

Date: 2/28/2017	Time: 0750	Duration of meeting: 5 min,	Project #
Location: Building 19150		Task: Install conduit at Well-7	

Type of meeting: ✓ Daily ___ Weekly ___ Monthly ___ Other: _____

Items/Issues discussed:

1. Hand tool use - right tool for each task
2. Slip trip fall hazards - uneven surfaces
3. trench safety, SU was utilized,
4. very small trench is all that was
5. required

Attach minutes of safety meeting if taken.

Safety questions/issues raised:	Actions/Follow-up needed:
1.	
2.	
3.	
4.	
5.	
6.	

Remarks:

Meeting conducted by: Peter Juran

HEALTH AND SAFETY ACTIVITY REPORT

Site: KAFB BFF GWTS Expansion Location: Building 19150

Weather Cond.: Cool, Moderate winds Onsite Hours: From 0745 To 0900

Changes in PPE Levels[1]	Work Operations	Reasons for Change
None		

Site Safety and Health Plan Violations	Corrective Action Specified	Corrective Action Taken [2](yes/no)
No violations		

Observations and Comments:

None

Completed by: Petra Lunan 2-28-2017 Date:
Site Health and Safety Supervisor

[1]Only SSHO may change PPE levels, using only criteria specified in APP/SSHP.
[2]If a deficiency is noted that cannot be immediately corrected, the SSHO will monitor the progress in correcting the deficiency and will document following:

- Date the deficiency was identified
- Description of the deficiency
- Name of the person responsible for correcting the deficiency
- Projected date of correction
- Actual date of correction.

DAILY REPORT

(ATTACH ADDITIONAL SHEETS IF NECESSARY)

CONTRACT NAME:	Kirtland AFB Bulk Fuels Facility Expansion of Dissolved Plume GWTS Design	REPORT NO:	072
CONTRACT NUMBER:	W912DR-12-D-0006	REPORT DATE:	01 MAR 17
REVISION NUMBER:	-	REVISION DATE:	-
TASK ORDER NUMBER:	DM01	PROJECT NAME / LOCATION:	KAFB, ABQ, NM
PROJECT NUMBER:	62599DM01	PROJECT DESCRIPTION:	KAFB GWTS Expansion
PROJECT MANAGER:	Devon Jercinovic	FIELD QUALITY MANAGER:	Kevin McKeage
CONSTRUCTION MANAGER:		SITE SAFETY MANAGER:	Pete Ferrari

AM WEATHER:	Cool Clear	PM WEATHER:	Cool Clear	MAX TEMP (F):	50		

SUMMARY OF WORK PERFORMED TODAY

Replaced butterfly valve on the newly installed effluent pump skid

HEALTH AND SAFETY REPORT

SAFETY ACTIONS TAKEN TODAY/SAFETY INSPECTIONS CONDUCTED (Include Observations, Safety Violations, Corrective Instructions Given, Corrective Actions Taken, and Results of Safety Inspections Conducted:

Visual Observation, No Violations

TAILGATE TOPICS:

Slips, trips, falls, Pinch Points, GWTS operations

SAFE BEHAVIOR OBSERVATIONS/SELF-ASSESSMENTS:

Safe behavior observed.

OPERATIONS/PRODUCTION REPORT

WORK FORCE – CONTRACTOR AND SUBCONTRACTOR

Company	Cumulative Total of Work Hours From Previous Report	Total Hours Today	Total Work Hours
Techsas	365	3	368

EQUIPMENT ON HAND

Description of Equipment	Make/Model/ Manufacturer	Equipment ID Number	Inspection Performed By
None			

COMMENTS (acceptance status, inspection findings, etc.):

OK

WORK AND/OR TESTS ACCOMPLISHED OR IN PROGRESS

Performed Work/Test for Today:
Replaced butterfly valve on the newly installed pump skid.

Planned Work/Test for Tomorrow:
None

Planned Work/Test for Next Week:
None

CHANGED CONDITIONS/DELAY/CONFLICTS ENCOUNTERED (List any conflicts with the project [i.e., scope of work and/or drawings], delays to the project attributable to site and weather conditions, etc. None

VISITORS AND DISCUSSIONS: USACE arrived for brief tour.

QUALITY CONTROL REPORT

MATERIALS DELIVERED TO JOB SITE

Quantity/Volume/ Weight	Description of Materials Received	Make/Model/ Manufacturer	Material Lot Number	Inspection Performed By
1	Replacement Valve			KM

COMMENTS (acceptance status, inspection findings, etc.): OK

INSPECTIONS PERFORMED

Task/Activity Inspected	Inspection Performed	Findings
Valve Replacement	Visual Inspection	OK

TESTS PERFORMED

Task/Activity Tested	Test Performed	Test Results (Pass/Fail) - Criteria
Valve Replacement	Leak and pressure test	Pass no leaks @ 100psi for 5minutes.

QUALITY ISSUES AND RESOLUTIONS: None

SUBMITTALS INSPECTION / REVIEW

Submittal No.	Submittal Description	Specification/Plan Reference	Submittal Approved?		Comment/Reason/Action
NA	Daily Report	_	Yes ☐	No ☐	Pending
NA	SBO	_	Yes ☐	No ☐	Pending
NA	PTSP	_	Yes ☐	No ☐	Pending

REGULATORY COMPLIANCE REPORT							
PERMIT INSPECTIONS PERFORMED: None							
WASTE ACCUMULATION/STOCKPILE AREA INSPECTION							
Inspection Performed By:	NA			Signature of Inspector:			
Accumulation / Stockpile Area Inspected:							
No of Bins:		No of Tankers		No of Roll-Off Boxes:		No. of Tanks	
Inspection Results: NA							
GENERAL COMMENTS							
General Comments: (rework, directives, etc.): OK							
ATTACHMENTS							
List of Attachments: (examples, as applicable: submittals, meeting minutes, safety meeting minutes, COCs, weight tickets, manifests, profiles, rework item list, RFIs, DCNs, photographs, etc.): Photo log and Safety Documentation							
NOTE: Write all entries legibly in ink. Line out all unused portions or designate as "not applicable". Preparer signs first and last name on each completed daily report. This form may be filled out electronically and signed electronically.				PREPARER'S SIGNATURE		01MAR17 DATE	

Location: Newly Installed Effluent Pump Skid
Description: Valve being Replaced (Left)
Date: 01 March 2017 Direction: Down

Location: Newly Installed Effluent Pump Skid
Description: Valve being Replaced (Right)
Date: 01 March 2017 Direction: Down

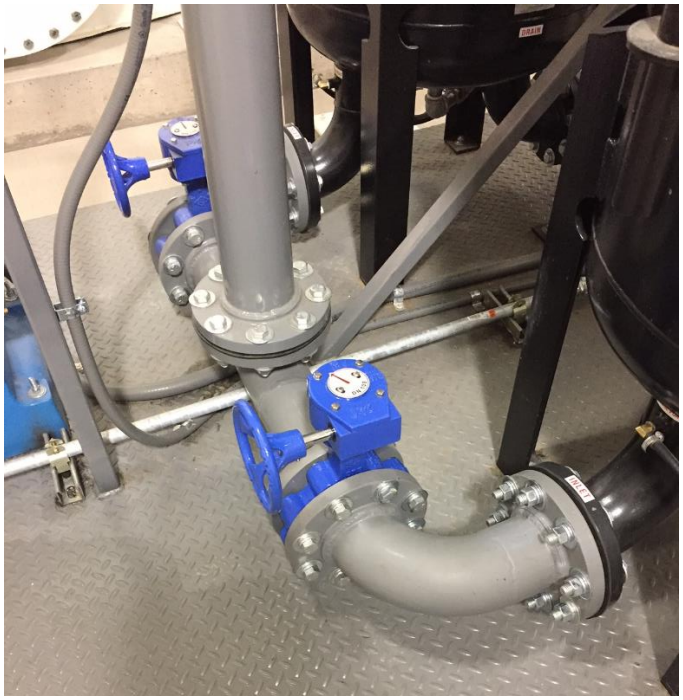

Location: Newly Installed Effluent Pump Skid
Description: Hand Excavated Trench
Date: 01 March 2017 Direction: Down

EA Engineering, Science, and Technology, Inc.

DAILY SAFETY INSPECTION CHECKLIST (TO BE COMPLETED EACH DAY OF CONSTRUCTION OR HTRW SITE ACTIVITIES)

Site: KAFB BFF GWTS Expansion
Location: Building 19150
Project No.: 62599 DM01
Client: USACE

Prepared by SSHO: Pete Ferrari
Project Manager: Devon Jerchovic
Date: ~~3/1~~ 3/1/2017

Rating	Y	N	N/A	Comments/Immediate Corrective Action[1]
Accident Prevention Plan (APP) and Site Safety and Health Plan (SSHP) General Requirements				
Are there new onsite personnel? • Did they receive pre-entry briefing and are their names recorded in field logbook or daily log? • Was the USACE PM made aware of the new personnel. • Required training and medical surveillance documentation received (e.g., 40-hr, 8 hr, etc.)?			/	
Did personnel sign in/out of site?				
Daily tailgate safety meetings conducted and documented?				
Were new activities performed today? Were hazards identified, discussed during the daily safety tailgate, and incorporated into revised APP/SSHP?			/	
New materials brought on site? MSDSs available?				
Exclusion (EZ), Contamination Reduction (CRZ), and Support Zones (SZ) delineated and enforced?				
General housekeeping measures in place to prevent hazards?				
Emergency Planning				
Were there any changes to emergency contact names, telephone numbers, or hospital? If so, were site personnel made aware and was information distributed/reposted.			/	
Adequate safety equipment inventory available?				
Fire extinguisher available (monthly inspection of extinguisher will suffice)				
Eyewash station(s) functioning and in place (weekly inspection of eye wash station will suffice)?				
First aid supplies available (weekly inspection of first aid kit will suffice)?				
Communication equipment readily available for emergencies?				
Any reported accidents/incidents at this site? If so, were accident reporting procedures followed?			/	
Air Monitoring				
Monitoring equipment specified in SSHP available and in working order? Air monitoring instrumentation for this site includes – check each if required/on site, note deficiencies in comments: • Combustible gas meter • Organic vapor analyzer • Contaminant specific analyzer for benzene (if total organic vapor concentrations exceed 0.5 ppm)			/	
Monitoring equipment calibrated and calibration records			/	

Y = Satisfactory or Yes; N = Unsatisfactory or No, N/A = Not applicable

Rating	Y	N	N/A	Comments/Immediate Corrective Action[1]
available?				
Environmental and personnel monitoring performed as specified in SSHP?			✓	
PPE				
Proper dermal protection worn by EA and subcontracted employees when handling/ contacting hazardous chemicals or contaminated environmental media?	✓			
Required PPE (hard hats, safety boots / shoes, eye protection with side shields, hearing protection) being worn by EA and subcontracted employees?	✓			
PPE inspection completed by SSHO?	✓			
Drill Rig Operations				
Daily rig inspection completed? Any equipment problems?			✓	
Drill rigs/elevated equipment maintaining minimum 10-ft distance from energized (50 kV) overhead power lines?			✓	
Investigation-derived Waste (IDW)				
Wastes properly staged, secured, and labeled at end of day?			✓	

Additional Comments:

Peter Furrow
Site Safety and Health Officer's Signature

3/01/2017
Date

[1]If a deficiency is noted that cannot be immediately corrected, the SSHO will monitor the progress in correcting the deficiency and will document following:

- Date the deficiency was identified
- Description of the deficiency
- Name of the person responsible for correcting the deficiency
- Projected date of correction
- Actual date of correction.

EA ENGINEERING, SCIENCE AND TECHNOLOGY, INC.
SAFETY MEETING REPORT

Date: 3/01/2017	Time: 0730	Duration of meeting: 5 min	Project #
Location: Building 19150		Task: Install valve in train 2 discharge piping	

Type of meeting: ✓ Daily ___ Weekly ___ Monthly ___ Other: _____

Items/Issues discussed:

1. Slip trip falls - uneven surfaces in
2. OWTS
3. Pinch points - flange fittings
4. pose possible pinch point
5.

Attach minutes of safety meeting if taken.

Safety questions/issues raised:	Actions/Follow-up needed:
1.	
2.	
3.	
4.	
5.	
6.	

Remarks:

Meeting conducted by: Peter Tenant

HEALTH AND SAFETY ACTIVITY REPORT

Site: KAFB BFF GWTS Expansion Location: 19150 (Building #)

Weather Cond.: Sunny/cold Onsite Hours: From 0700 To 0930

Changes in PPE Levels[1]	Work Operations	Reasons for Change
None		

Site Safety and Health Plan Violations	Corrective Action Specified	Corrective Action Taken[2] (yes/no)
No violations		

Observations and Comments:

Completed by: [signature] 3/1/2017
Site Health and Safety Supervisor Date:

[1] Only SSHO may change PPE levels, using only criteria specified in APP/SSHP.
[2] If a deficiency is noted that cannot be immediately corrected, the SSHO will monitor the progress in correcting the deficiency and will document following:

- Date the deficiency was identified
- Description of the deficiency
- Name of the person responsible for correcting the deficiency
- Projected date of correction
- Actual date of correction.

TESTING DOCUMENTATION

Date: **Alarm Verification**

Alarm	Set Point	Actual Point	System Effect	Alarm Reported to HMI	Alarm Remotely Notified	Reset/Remotely Operable	Date and Time Tested	Operator	Number of Times Tested	Pass/Fail	Notes
Code	#	#	Shutdown _____	Y/N	Y/N	Y/N (Manual or Auto)	MM/DD/YY 0000	Initials	#	P/F	
Tank 110 Level SW HI	11.3	11.3	Shutdown All	Y	Y	Y	1/30/2017 15:46	KM	1	P	
Tank 210 Level SW HI	11	11	Did not shutdown	Y	Y	Y	1/30/2017 15:45	KM	1	F	
Tank 116 LEVEL SW LO	1.9	1.9	N/A	Y	Y	Y	1/30/2017 16:36	KM	1	N/A	System could not run in auto while simultaneously faulting this alarm
Tank 210 Lvl SW HI	11	11	Turn off Extraction wells	Y	Y	Y Auto Reset	2/6/17 11:20	KM	1	P	System restarted extraction wells following alarm entered
Well 228 Leak Detect (Vault)	NA	NA	None	Y	Y	N Did not Disable well	2/6/17 12:51	KM	2	F	Corrected 02/21/17
Well 228 Leak Detect (Dual Wall)	NA	NA	None	Y	Y	N Did not Disable Well	2/6/17 13:31	KM	3	F	System does not differentiate between vault and dual wall. Corrected 02/21/17
Well 233 Leak Detect (Vault)	NA	NA	233 offline, unable to determine well shutdown. System Unaffected.	Y	Y	NA	2/6/17 14:02	KM	3	NA	
Well 233 Leak Detect (Dual Wall)	NA	NA	"	Y	Y	NA	2/6/17 14:06	KM	2	NA	
Well 234 Leak Detect (Vault)	NA	NA	~~233~~ KM Turned off well 234	Y	Y	Y Auto Reset	2/6/17 14:40	KM	2	P	
Well 234 Leak Detect (Dual Wall)	NA	NA	Turned off well 234	Y	Y	Y Auto Reset	2/6/17 14:44	KM	2	P	System does not differentiate between vault and dual wall.
Eastern Avenue Leak Detect (Vault)	NA	NA	Reported as 233 leak	Y	Y	NA	2/6/17 15:05	KM	2	F	Not reporting as Eastern Avenue. Corrected 02/21/17
Well Control House Leak Detect (Floor)	NA	NA	No alarm, no visualization Shutdown 234.	N	N	N	2/6/17 15:23	KM	2	F	No alarm Reported Corrected 02/21/17
Well Control House Leak Detect (Dual Wall 8")	NA	NA	NA	NA	NA	NA	NA	NA	NA	NA	Unable to test as inaccessible
Louisiana Vault for 228 (Vault)	NA	NA	Reported as 228 Alarm No effect.	Y	Y	N Did not disable well	2/6/17 1547	KM	2	F	Not reporting as Louisiana. Corrected 02/21/17
Louisiana Vault for 228 (Dual Wall)	NA	NA	Reported as 228 Alarm No effect	Y	Y	N Did not Disable Well	2/6/17 1554	KM	2	F	Not reporting as Louisiana. corrected 02/21/17
Louisiana LSH 8001 (Vault)	NA	NA	Not Reported. No effect	N	N	N Nothing Disabled.	2/6/17 1614	KM	2	F	Not reported Corrected 02/21/17
GWTS Internal Sump Trains 2 op.	NA	NA	Not Reported No effect.	N	N	N Nothing Disabled	2/7/17 0841	KM	2	F	Not Report Corrected 02/21/17
GWTS Trench Sump Trains 2 op.	NA	NA	Not Reported No effect	N	N	N Nothing Disabled	2/7/17 0920	KM	2	F	Not Reported. Corrected 02/21/17
Influent Train 1 Feed Discharge Pressure SW HI	40	48	No effect	Y	Y	Y Auto	2/7/17 1011	KM	2	F	No effect Corrected 02/21/17
Carbon absorber V114 AB Press SW HI	40	45	Shut off Inf + Eff Skids (Wells still Running)	Y	Y	~~N~~ KM Y Auto	2/7/17 1034	KM	2	P, but full effect would be preferred.	Also Alarmed V214 AB Press. SW HI Corrected 02/21/17

Date: **Alarm Verification**

Alarm	Set Point	Actual Point	System Effect	Alarm Reported to HMI	Alarm Remotely Notified	Reset/Remotely Operable	Date and Time Tested	Operator	Number of Times Tested	Pass/Fail	Notes
Code	#	#	Shutdown _____	Y/N	Y/N	Y/N (Manual or Auto)	MM/DD/YY 0000	Initials	#	P/F	
Train 1 Dist Press SW HI Effluent	50	55	No effect	Y	Y	Y Auto	02/07/17 1129	Km	2	F	No effect. Corrected 02/21/17
Train 2 Dist Press SW HI (Effluent skid)	~~65~~ 50 Km	85	No effect	Y	Y	Y Auto	02/07/17 1217	Km	2	F	Did not disable Skid. Second time no error?. Corrected 02/21/17
Influent Train 2	40	>65	No alarm, no effect.	N	N	N No Alarm	02/07/17 1249	KM	2	F	Did not alarm. Did not exceed 65psi. Corrected 02/21/17
Train 2 Feed Discharge Press SW HI (GAC)	40	39	Disabled system No alarm	Y	Y	Y Auto	02/07/17 1310	Km	2	F	No alarm Corrected 02/21/17
Intrusion alarm East door	NA	NA	None	N	N	N	02/07/17 1320	KM	2	F	No alarm Corrected 02/21/17
Intrusion alarm East bay door.	NA	NA	None	N	N	N	02/07/17 1321	KM	2	F	No alarm Corrected 02/21/17
Intrusion alarm Southeast doors	NA	NA	None	N	N	N	02/07/17 1322	KM	2	F	No alarm Corrected 02/21/17
Intrusion alarm Southwest doors.	NA	NA	None	N	N	N	02/07/17 1323	KM	2	F	No alarm. Corrected 02/21/17
Groundwater Feed Pump 212B Failed	NA	NA	Shutdown Pump	Y	Y	Y Manual	02/07/17 1421	Km	2	P	Finished 02/21/17
Groundwater Feed Pump 212A Failed	NA	NA	Shutdown Pump	Y	Y	Y Manual	02/07/17 1421	Km	2	P	Finished 02/21/17
Treated water Dist Pump 218 Failed	NA	NA	Shutdown Pump	Y	Y	Y Manual	02/07/17 1420	Km	2	P	Finished 02/21/17
Groundwater Feed Pump 112B Failed	NA	NA	Shutdown Pump	Y	Y	Y Manual	02/07/17 1508	Km	2	P	Unable to clear Fault ← when faulted due to A. Corrected 02/21/17
Groundwater Feed Pump 112A Failed	NA	NA	Shutdown Pump	Y	Y	Y Manual	02/07/17 1511	Km	2	P	Faults 112B when reset on 112A. Corrected 02/21/17
Treated water Dist Pump 118 Failed.	NA	NA	Shutdown Pump.	Y	Y	Y Manual	02/07/17 1513	KM	2	P	Finished 02/21/17
~~Exterior~~ E-Stop In	NA	NA	All Shutdown	Y	Y	Y Manual	02/08/17 1530	KM	2	P	Extraction well Pump 101 Failed alarm. Corrected 02/21/17
~~Exterior~~ E-Stop Ex	NA	NA	No Effect No Alarm	N	N	N	02/08/17 1535	Km	2	F	No Alarm. Not hooked up. Corrected 02/22/17
Well Control House E-Stop.	NA	NA	No effect No Alarm 234 off	N	N	N	02/16/17 1247	Km	1	F	Corrected 02/21/17
Tank 110 Level SW HI	11.0	11.30	Unable to determine	Y	Y	Y Auto	02/08/17 12:29	KM	1	P	Finished 02/22/17
Tank 210 Level SW HI	11.0	10.95	Shutdown extraction Wells	Y	Y	Y Auto	02/08/17 12:13	KM	1	P	Finished 02/22/17
Tank 116 Level SW HI	11.0	11.54	Unable to determine	Y	Y	Y Auto	02/08/17 12:49	Km	1	P	Finished 02/22/17

Date:	Alarm Verification										
Alarm	**Set Point**	**Actual Point**	**System Effect**	**Alarm Reported to HMI**	**Alarm Remotely Notified**	**Reset/Remotely Operable**	**Date and Time Tested**	**Operator**	**Number of Times Tested**	**Pass/Fail**	**Notes**
Code	#	#	Shutdown _____	Y/N	Y/N	Y/N (Manual or Auto)	MM/DD/YY 0000	Initials	#	P/F	
Tank 216 Level SW HI	11.0	11.45	Unable to determine	Y	Y	~~NA~~ Y Auto Km	02/08/17 13:04	KM	1	P	Finished 02/22/17
Tank 110 Low Level	2.0	1.68	Unable to determine	Y	Y	Y Auto	02/08/17 1335	KM	1	P	Finished 02/22/17
Tank 210 level SW LO	2.0	1.69	Unable to determine	Y	Y	Y Auto	02/08/17 1340	KM	1	P	Finished 02/22/17
Tank 216 level SW LO	2.0	1.64	Unable to determine	Y	Y	Y Auto	02/08/17 1732	KM	1	P	Finished 02/22/17

Date: **Flowmeter Calibration Verification**

Flowmeter	Start Time	End Time	Initial Tank Reading HMI (ft)	Final Tank Reading HMI (ft)	Flowmeter Reading (gpm)	Flowmeter Reading HMI (gpm)	Date and Time Completed	Operator	Notes
Software ID	0000	0000	#	#	#	#	MM/DD/YY 0000	Initials	
Extraction Wells Combined (TK11)	1537	1546	3.06'	5.90'	(228) ~~445~~ KM 303.8	(228) 145 - 302	03/07/17 1607	KM	Combined flowmeters to keep extraction system online
Extraction Wells Combined (TK216)	1577	1546	4.37'	5.78'	(234) ~~457~~ KM	(234) 157	03/07/17 1607	KM	2.84' + 1.41' = 4.25' · 607.6 gal/ft = 2582.4 gpm / 10.17' diameter = 8.5 mph
Int 2 (TK 216)	1558	1605	~~3.89~~ KM 4.43'	6.69'	196.2	200	03/07/17 1604	KM	2.26 · 607.6 = 1373.2 / 7 = 196.2
Ext 2 (TK 216)	1625	1632	6.70	4.34	204.8	202	03/07/17 1647	KM	Difficult to stabilize w/ Valve actuation 2.36 · 607.6 = 1433.9 / 7
Ext 1 (TK 116)	1634	1644	6.47	4.19	197.9	198	03/07/17 1649	KM	2.28 · 607.6 = 1385.3 / 7
Int 1 (TK 116)	1648	1655	5.59	7.91	201.4	199	03/07/17 1656	KM	2.32 · 607.6 = 1409.6 / 7

Date:	Level Sensor Calibration Verification				
Tank	**HMI Reading (ft)**	**Sight Glass Level (ft)**	**Date and Time**	**Operator**	**Notes**
Software ID	#	#	MM/DD/YY 0000	Initials	
TK-110	4.33	4.45' 4. 5 3/8" 53 3/8"	03/06/17 1525	KM	
TK-210	5.29	5.43' 65 1/4"	03/06/17 1526	KM	
TK-116	7.79	7.96' 95.5"	03/06/17 1527	KM	
TK-216	6.30	6.42' 77 1/1	03/06/17 1528	KM	
Golf Course Pond	4.70	Pond 2.70'	03/06/17 1547	KM	This value will be used to adjust the high level setpoint

Date:	Loop Check					
Component	**Component Reading**	**HMI Reading from Componenet**	**Controlable from HMI (if applicable)**	**Date and Time**	**Operator**	**Notes**
Software ID	#	#	Y/N	MM/DD/YY 0000	Initials	
W228 Flowmeter	146.3 gpm	146 gpm	NA	02/06/17 13:38	KM	
W228 Totalizer	7.0093 MG	~~7.0093 KM~~ 263,426 gal	NA	02/06/17 13:38	KM	
W233 Flowmeter	0 gpm	0	~~NA~~ KM	02/06/17 1517	KM	Unable to test with E33 offline.
W233 Totalizer	0 MG	7,084,600	~~NA~~ KM NA	02/06/17 1517	KM	
W239 Flowmeter	154.9 gpm	155 gpm	Yes	02/06/17 1519	KM	
W234 Totalizer	7.4803 MG	451,986 gal	NA	02/06/17 1519	KM	
W233 Pressure	- 0.15	0	NA	02/06/17 1517	KM	
W234 Pressure	18.10 psi	18 psi	NA	02/06/17 1519	KM	
W28 Pressure	60.29 psi	60 psi	NA	02/06/17 14:20	KM	
F-112A X Bag Filters	1.5520 psi	1.55 psi	NA	02/07/17 14:35	KM	
F-112B X Bag Filters	1.6819	1.69 psi	NA	02/07/17 14:37	KM	
Train 1 Int Flowmeter FIT-3102	305.3 gpm	305 gpm	Y (Train control)	02/07/17 14:41	KM	
Train 1 Int Totalizer	0.0829 MG	555,419 gal	NA	02/07/17 14:42	KM	
Train 1 ~~Int~~ Eff Flowmeter	305.2 gpm	305 gpm	X (Train Control)	02/07/17 14:44	KM	
Train 1 Eff Totalizer	14,1646 MG	14,108,158 gal	NA	02/07/17 14:45	KM	
Upstream PIT-3121	21.9 psi	20.2 psi	Y (PID)	02/07/17 14:50	KM	
Down Stream PIT-3130	3.80 psi	3.8 psi	NA	02/07/17 14:52	KM	
F-212A PDIT-3102 X Bag Filters	0.203 psi	0.20 psi	NA	02/07/17 15:26	KM	
F-212B X Bag Filters	0.248 psi	0.24 psi	NA	02/07/17 15:27	KM	
Train 2 Int Flowmeter	305.4 gpm	305 gpm	Y (Train Control)	02/07/17 15:29	KM	

Date:	Loop Check					
Component	**Component Reading**	**HMI Reading from Componenet**	**Controlable from HMI (if applicable)**	**Date and Time**	**Operator**	**Notes**
Software ID	#	#	Y/N	MM/DD/YY 0000	Initials	
Train 2 Inf Totalizer	0.3176 MG	256,741 gal	NA	02/07/17 1529	KM	
Train 2 Eff Flowmeter	304.7 gpm	304 gpm	Y (train Control)	02/07/17 1530	KM	
Train 2 Eff Totalizer	0.3137 MG	1,092,082 gal	NA	02/07/17 1530	KM	
Golf Course Main Pond Level	2.64'	2.6	NA	02/14/17 1232	KM	
Well 7 Flowmeter	328 gpm	328 gpm	NA	03/06/17 1540	KM	
Well 7 Pressure	3.485 psi	3.5 psi	Y	03/06/17 1541	KM	
Tank 110 Level	75.75" = 6.31'	7.45'	NA	02/14/17 0815	KM	
Tank 116 Level	82.5" = 6.88'	~~7.55'~~ KM 8.04'	NA	02/14/17 0817	KM	
Tank 210 Level	78.1" = 6.26'	7.35'	NA	02/14/17 0819	KM	
Tank 216 Level	56.6" = 4.72'	5.80'	NA	02/14/17 0821	KM	

Date:	Status Indication Function						
Component	**Online and Ready Status (Blue)**	**Online Operating Status (Green)**	**Fault Status (Red)**	**Manual Override Status (Yellow)**	**Date and Time**	**Operator**	**Notes**
Software ID	Y/N	Y/N	Y/N	Y/N	MM/DD/YY 0000	Initials	
W228	Yes	Yes	N for leaks Corrected 02/21/17		2/6/17 0900	PF	Red: Yellow:
W233			N for leaks Corrected 02/21/17	No (Is blue in manual mode (icon) ~~Yellow~~	2/6/17 0900	Km	Yellow only when running and cannot run.
W 234	Yes	Yes	N for leaks. Corrected 02/21/17	Yes	2/6/17 0900	PF	Red: Yellow: 1229 (2/8)
P-112 A	Yes	Yes	Yes	Yes	2/6/17 0900	PF	Red: 1508 Yellow: 1534
P-112B	Yes	Yes	Yes	Yes	02/7/17 1530	PF	Red: 1511 Yellow: 1535
P-118	Yes	Yes	Yes	Yes	2/6/17 0900	PF	Red: 1513 Yellow: 1536
P-218	Yes	Yes	Yes	Yes	2/6/17 0900	PF	Red: Yellow: 2/7/17 1415
P-212A	Yes	Yes	Yes	Yes	2/7/17 1413	Km	In manual mode is green until 1500 pm
P-212B	Yes	Yes	Yes	Yes	2/7/17 1412	Km	
TK-110 LSH	N/A	Yes	Yes	N/A	2/6/17 1120	PF	Tank Hi-Level
TK-110 LSL	NA	Yes	Yes	NA	2/8/17 1342	Km	
TK-116 LSH	NA	Yes	Yes	NA	2/8/17 1250	Km	
TK-116 LSL	NA	Yes	Yes	NA	~~2/8/17~~ 2/8/17 1/30 16:36	Km	
TK-210 LSH	NA	Yes	Yes	NA	2/8/17 ~~1250~~ 1229	Km	
TK-210 LSL	NA	Yes	Yes	NA	2/8/17 1342	Km	
TK-216 LSH	NA	Yes	Yes	NA	2/8/17 1342	Km	
TK-216 LSL	NA	Yes	Yes	NA	2/8/17 1532	Km	
W228 Leak Alarm	NA	NA	Yes	NA	2/6/17 13:31	Km	Both Vault and Dual wall.
W233 Leak Alarm	NA	NA	Yes	NA	2/6/17 14:06	Km	Both Vault and Dual wall.
W234 Leak Alarm	NA	NA	Yes	NA	2/6/17 15:04	Km	Both vault and dual wall.

Green before Yellow. (2/7/16)

Date:	Status Indication Function						
Component	**Online and Ready Status (Blue)**	**Online Operating Status (Green)**	**Fault Status (Red)**	**Manual Override Status (Yellow)**	**Date and Time**	**Operator**	**Notes**
Software ID	Y/N	Y/N	Y/N	Y/N	MM/DD/YY 0000	Initials	
Train 1 Int PSH	NA	Yes	Yes	NA	02/08/17 1456	KM	
Train 1 GAC PSH	NA	Yes	Yes	NA	02/08/17 1517	KM	
Train 1 EBC PSH	NA	Yes	Yes	NA	02/08/17 1525	KM	
Train 2 PSH Int	NA	Yes	No Corrected 02/21/17	NA	02/13/17 0800	KM	
Train 2 GAC PSH	NA	Yes	No Corrected 02/21/17	NA	02/14/17 0808	KM	
Train 3 EBC PSH	NA	Yes	Yes	NA	02/14/17 0810	KM	
WCH Leak Alarm (Vault 7)	NA	NA	No Corrected 02/22/17	NA	02/06/17 1523	KM	Did not alarm nor show on HMI
Eastern Ave Vault leak Alarm	NA	NA	No Corrected 02/22/17	NA	02/06/17 1505	KM	Did not appear on HMI as Eastern Ave
Louisiana Vault leak alarm (228)	NA	NA	No Corrected 02/22/17	NA	02/06/17 1547	KM	Did not appear as Louisiana 228
Louisiana Vault leak (233+234)	NA	NA	No Corrected 02/22/17	NA	02/06/17 1614	KM	Did not alarm no appearance.

TECHSAS Incorporated

Hydrostatic Test Data Report - 01

Line Description: 6" Line from Inlet Bag Filter Skid to Carbon Vessels

Date: 1/20/17 Start Time: 8:38 End Time: 10:38 Volume of Water: 224.76

Length of Pipe: 153' Start Pressure: 100 End Pressure: Pass X Fail___

Pressure Readings:

+15 Min	100	+75 Min	100
+30 Min	100	+90 Min	100
+45 Min	100	+105 Min	100
+60 Min	100	+120 Min	100

Average Test Pressure 100

Water Added? Y___ N X

Allowable volume of water per hour _____ G

Actual Volume of water added _____ G

Number of Joints in the length of piping tested 12

L = Cf x N x D x P0.5 where:

L = allowable leakage in gallons per hour

Cf = 0.0001351

N = number of joints in the length of piping tested

D = nominal pipe diameter

P = average test pressure in psig

Certified by: Luke Rief

Organization EA

Signature Luke Rief

Notes: No leaks observed.

TECHSAS Incorporated

Hydrostatic Test Data Report - 02

Line Description: Feed Pipe to Inlet Bag Filter Skids

Date: 1/26/17 Start Time: 8:38 End Time: 10:38 Volume of Water: 77.86

Length of Pipe: 53' Start Pressure: 100 End Pressure: ~~100~~ 99 Pass X Fail ___

Pressure Readings:

+15 Min	99	+75 Min	99
+30 Min	99	+90 Min	99
+45 Min	99	+105 Min	99
+60 Min	99	+120 Min	99

Water Added? Y ___ N X Average Pressure 99

Allowable volume of water per hour _____ G

Actual Volume of water added _____ G

Number of Joints in the length of piping tested 11

L = Cf x N x D x P0.5 where:

L = allowable leakage in gallons per hour

Cf = 0.0001351

N = number of joints in the length of piping tested

D = nominal pipe diameter

P = average test pressure in psig

Certified by: Luke Rief

Organization EA

Signature Luke Rief

Notes: No leaks observed.

TECHSAS Incorporated

Hydrostatic Test Data Report - 03

Line Description: Discharge Pipe from Effluent Bag Filter Skids to Discharge

Date: 01/20/17 Start Time: 0953 End Time: 1153 Volume of Water: 86.6

Length of Pipe: 59' Start Pressure: 96 End Pressure: Pass X Fail ___ ← Pipe passes, but effluent valve failed.

Pressure Readings:

+15 Min	80, +Water to 96	+75 Min	82, +Water to 96
+30 Min	79, +Water to 96	+90 Min	78, +Water to 96
+45 Min	80, +Water to 96	+105 Min	82, +Water to 96
+60 Min	79, +Water to 96	+120 Min	79, +Water to 96

Average Test Pressure 88

Water Added? Y ✓ N ___

Allowable volume of water per hour 0.7 G

Actual Volume of water added 770.7 G

Number of Joints in the length of piping tested 9

L = Cf x N x D x P0.5 where:

L = allowable leakage in gallons per hour

Cf = 0.0001351

N = number of joints in the length of piping tested

D = nominal pipe diameter

P = average test pressure in psig

Certified by: Luke Riel

Organization EA

Signature [signature]

Notes: Pressure drop observed for this length of pipe. Pressure drop is associated with effluent christmas tree valve not seating correctly. Attempted to seat the valve and began test. Pressure test on valve is not critical. no leak observed in pipe during 2 hour test. Water added each 15 minutes to keep pressure on pipe.

DART Trucking COMPANY, INC. NORTH LIMA, OH

11017 MARKET ST.
NORTH LIMA, OH 44452
US & OHIO 1-800-541-8206
330-549-4115

CalgonCarbon
Making Water and Air Safer and Cleaner

SHIPPER Calgon Carbon Corp. Catlettsburg Ky	DATE: 12-13-16
RECEIVER Kirtland AFB Albuquerque, NM	Driver's Signature [signature]
NOTE: ARRIVAL AND DEPARTURE TIMES MUST BE FILLED IN DAILY	Truck No. DT-141
ARRIVAL TIME DAY - 1: 08:00 MST / DAY - 2:	Trailer No. MCT-25
DEPARTURE TIME: 1:00 MST	Driver No. 2951
TOTAL TIME: 5 Hrs	Load No. 14203

GENERAL REMARKS:

NOTE: ALLOWED TRUCK FREE TIME IS FOUR (4) HOURS, EXCESS HOURS MAY BE INVOICED

REASONS FOR CUSTOMER DELAY: Slow watering of Clean Carbon

CUSTOMER'S SIGNATURE [signature]	CUSTOMER'S PRINTED NAME Ed Butler

WHITE - **CUSTOMER** • CANARY - **BILLING** • PINK - **FILE**

77066

RDI Construction, Inc.

RDI Construction, Inc.
P.O. Box 705
South Point, OH 45680
Phone: 740-377-9984
Fax: 740-377-9913
Email: rdi@zoominternet.net

EQUIPMENT DATA	
Unit Number	Special Instructions
MCT 25	
RMA Number	Can # 1728N
10029108	

Item	Compartment	Type Cleaning	Washed
1	Hopper 1	COLD Rinse	✓
2	Hopper 2	COLD Rinse	✓
3	Hopper 3	COLD Rinse	✓
4	Hopper 4	COLD Rinse	✓
5	Hopper 5	COLD Rinse	
6	Drain Tube	COLD Rinse	✓

Checked By: Richard A.
Time: 10:00
Date: 12-8-16

Customer represents that the description of the last product is accurate in all material respects and authorizes RDI Construction, Inc. herein after referred to as RDI, to perform the services indicated hereon. RDI makes no guarantees with respect to the completeness of the cleaning process or the complete elimination of all residue and moisture. RDI makes no representations, expressed or implied, as to the work performed or the fitness of the equipment cleaned for any purpose whatsoever unless reduced to writing and signed by the duly authorized representatives of Calgon and RDI. Inspection of the tank is the responsibility of Calgon and Calgon hereby relieves and discharges RDI of any responsibility, claims and demands whatsoever by any person stemming from any allegation that the vehicle was improperly or incompletely rinsed.

Summary of Operational Tests

06FEB2017 0900 Initiated test run of Treatment Train #1 to the golf course main pond.

- Began operation of the system by following the BFF Control Sequence provided by I&C Solutions. All listed items checked out as ready for operation.
- Set flow point on train #1 to 300 gpm and initialized the system.
- Following a 20 second delay the influent and effluent skids turned on ran for a short period of time then turned off.
- The effluent pump then reinitialized and was running at about 60 gpm with an upstream distribution pressure of 31 psi. (During which the pump sounded like it was not operating in a good flow/pressure range)
- The influent pump then reinitialized but was operating at a flowrate less than detectable.
- Extraction well 228 turned on and was shortly followed by well 234.
- The influent and effluent pumps then began to increase their flowrates.
- The extraction wells took under a minute to reach their flow set points.
- The influent pump took approximately 17 minutes to reach its flow set point.
- The effluent pump took approximately 48 minutes to reach its flow set point.

06FEB2017 1038 The test run of Treatment Train #1 was completed.

- Extraction well 228 turned off and was shortly followed by well 234.
- The effluent and influent pumps decreased their flowrates and turned off.
- The shutdown process took less than a minute total.

06FEB2017 1041 Initiated test run of Treatment Train #1 and Treatment Train #2 (simultaneous run) to the golf course main pond.

- Began operation of the system by following the BFF Control Sequence provided by I&C Solutions. All listed items checked out as ready for operation.
- Set flow points on train #1 and #2 to 151 gpm and initialized the system.
- Both influent and effluent pumps for train #1 initialized and were shortly followed by the influent and effluent pumps of train #2 (all pumps running at flowrates below that detectable for less than a minute).
- Train #1's influent pump reached 24 gpm and train #2's influent pump reached 120 gpm and then both turned off.
- Train #1's effluent pump reached 55 gpm and train #2's effluent pump reached 27 gpm and the upstream distribution pressure reached 42.7 psi.
- Train #1's effluent pump then returned to a below detectable flowrate and Train #2's pump reached 138 gpm.
- Extraction well 228 initialized and was followed by well 234.
- Train #2's influent pump then initialized and was running at a flowrate below detection.
- After approximately a minute train #2 influent pump increased to 142 gpm and effluent pump increased to 158 gpm. (Train #2's effluent pump began oscillating in flowrate)
- Two minutes after, train #1's effluent pump began flowing 25 gpm.

- After an additional six minutes train #1's influent pump turned on and was operating at a flowrate of approximately 120 gpm.
- The extraction wells took under a minute to reach their flow set points.
- Train #2's influent pump took approximately 7 minutes to reach its flow set point.
- Train #1's influent pump took approximately 17 minutes to reach its flow set point.
- Both train #1 and #2 effluent pumps did not reach their flow set points, but instead oscillated back and forth between 130 and 170 gpm.
- At 1120 tank 210's high level switch activated and disabled the extraction wells. Extraction wells restarted following the lowering of the influent tank level. The system flowrate was increased to 155 per train to avoid extraction well shutdown.

06FEB2017 1137 The test run of Treatment Train #1 and Treatment Train #2 (simultaneous run) was completed.

- Extraction well 228 turned off and was shortly followed by well 234.
- The effluent and influent pumps decreased their flowrates and turned off.
- The shutdown process took less than a minute total.

06FEB2017 1140 Initiated test run of Treatment Train #2 to the golf course main pond.

- Began operation of the system by following the BFF Control Sequence provided by I&C Solutions. All listed items checked out as ready for operation.
- Set flow point on train #2 to 305 gpm and initialized the system.
- Following a 20 second delay the influent and effluent pumps turned on and reached their set point flows.
- Extraction well 228 turned on and was shortly followed by well 234.
- The extraction wells took under a minute to reach their flow set points.
- The influent pump took approximately 3 minutes to reach its flow set point.
- The effluent pump took approximately 3 minutes to reach its flow set point.
- The system was periodically checked until 1242 when alarm testing began.
- The effluent tank reached the 4 ft level and the effluent pump was turned down to 25 gpm, but rebounded slowly in flowrate back up to 305 gpm. This allowed the tank to rebound to about the 5 ft level.

06FEB2017 1242 Initiated alarm testing (see additional information on alarm test forms).

06FEB2017 1641 Completed the test run of Treatment Train #2.

- Extraction well 228 turned off and was shortly followed by well 234.
- The effluent and influent pumps decreased their flowrates and turned off.
- The shutdown process took less than a minute total.

BFF Control Sequence

- To AUTO START SYSTEM and process water thru plant review checklist below before proceeding with system startup.

    1. HMI has color codes for quick reference of system to let operator know the status of the equipment by the following color codes
        - BLUE= STANDBY and READY
        - GREEN= RUNNING or in AUTO SEQUENCE
        - YELLOW= UNCOMMANDED RUNNING, CONTROL SYSTEM NOT IN CONTROL or MANUAL CONTROL SELECTED
        - RED= FAULT or ALARM Conditions
    2. Verify there are no pumps in alarm on Overview screen (Any pump in RED is in alarm and will require a RESET.
    3. Verify that all required pumps and wells are indicating that they are in REMOTE AUTO on the HMI screen.
    4. Verify on alarm page that there are no active alarms. (Active alarms will be highlighted in RED) Clear or Acknowledge any alarms or correct alarm conditions.
    5. Verify that all of the PID blocks for the active Wells/Pump Skids are in AUTO, (This can be verified by viewing the PID BOX is GREEN)
    6. Verify on Train Control screen that the pumps for the system are in SEQ mode and that they have a sequence number (0=OFF/1=LEAD/2=LAG)
    7. Verify where the water is going to be discharged to on distribution screen. When Golf course or Well 7 is selected a popup will appear reminding the operator to verify that the correct valves are opened in the field.
    8. Verify all Tank level transmitters are working and that the water levels are acceptable to run the system. If the Influent tanks are low run wells in Hand to get level up before proceeding to AUTO processing of Water system.
    9. Verify that all of the tank level floats (LSH/LSL) devices are GREEN on the overview and tank screens. If any of these devices are RED and FLASHING correct condition before proceeding.

- System is ready to process water if all of the items above are checked off and satisfied.
- On Train control screen there is an TRAIN CONTROL ON/OFF selector and next to this selection is a flow set point that can be adjusted. If running 1 train adjust this number to "300" to start. If running 2 trains adjust each train to run "150" to start.
- If running #1 TRAIN, select the ON button, system will start ACTIVE WELLS in the sequence you selected previously. After system has verified that wells are running, the influent train and effluent train skid pumps will startup and run the system at the set point selected in previous setup.
- When system is in full AUTO control, verify the WELL flows and total the well flow values on the HMI, with this value go back to the train control screen and adjust the system flow set point to match the incoming well flow.
- At anytime during water processing a TRAIN can be turned ON or OFF and taking out of the AUTO sequence, it is the responsibility of the operator to change the required flow set point on the trains to match the incoming flow.

- The Wells and Influent/Effluent pumps are interlocked with the tank level floats. See below for Interlocks
    1. High Level Influent Tanks = Shuts down all Wells
    2. Low Level Influent Tanks= Shuts down all Feed Pump skids
    3. High Level Effluent Tanks= Shuts down all Feed Pump skids
    4. Low Level Effluent Tank 116= Shuts down Discharge Pump P-118
    5. Low Level Effluent Tank 216= Shuts down Discharge Pump P-218
    6. High Level Well 7 Set point= Shutdown any Discharge Pump running.
- To turn system off go to Train control screen and select any system that is on to off position, system will turn off all wells and train feed pumps and discharge pumps off and in standby.

- PERFORM BACKWASH OF CARBON FILTERS. (Sequence is for Carbon Skid V-114A/B follow same procedure to backwash Carbon skid V-214A/B

    1. Operations to verify all hoses and manual valves or installed and in correct position.
    2. Select train control screen and take all Discharge pumps out of sequence and place in the off position.
    3. Verify that all Well pumps are still in sequence and in Remote Auto.
    4. Select 1 of the Feed pumps to perform backwash and select other feed pump to OFF position.
    5. Select the flow set point required on the flow set point button that is required to perform backwash.
    6. Verify PID block is in AUTO by status box showing GREEN for Feed Pump flow control.
    7. Verify Influent tank levels and floats are showing tank level and no floats are in alarm.
    8. Select Feed Pump skid for Train #1 and select ON to start backwash.
    9. Wells will sequence on to bring water into Influent tanks 110/210
    10. Feed pumps will ramp to desired set point selected by operations.
    11. To turn system off, go to Train control screen and select OFF button, Operating Wells will shutdown and Feed pumps will shutdown.
    12. To put system back into AUTO operations mode after backwash follow check list provided at start of this procedure.

- TO PUT SYSTEM IN OFF STANDBY STATE FOR MAINTENANCE OR REPAIRS

    1. On train control screen select all Wells, Feed Pumps, Discharge pumps to OFF positions and sequence numbers to "0"
    2. For further safety set flow control set points to "0"

BFF #12

Date: **Alarm Verification**

Alarm	Set Point	Actual Point	System Effect	Alarm Reported to HMI	Alarm Remotely Notified	Reset/Remotely Operable	Date and Time Tested	Operator	Number of Times Tested	Pass/Fail	Notes
Code	#	#	Shutdown _____	Y/N	Y/N	Y/N (Manual or Auto)	MM/DD/YY 0000	Initials	#	P/F	
Tank 110 Level SW HI	11.3	11.3	Shutdown All	Y	Y	Y	1/30/2017 15:46	KM	1	P	
Tank 210 Level SW HI	11	11	Did not shutdown	Y	Y	Y	1/30/2017 15:45	KM	1	F	
Tank 116 LEVEL SW LO	1.9	1.9	N/A	Y	Y	Y	1/30/2017 16:36	KM	1	N/A	System could not run in auto while simultaneously faulting this alarm
Tank 210 Lvl Sw HI	11	11	Turn off Extraction Wells	Y	Y	Y Auto Reset	2/6/17 11:20	KM	1	P	System restarted extraction wells following alarm autoreset
Well 228 Leak Detect (Vault)	NA	NA	None	Y	Y	N Did not Disable well	2/6/17 12:51	KM	2	F	
Well 228 Leak Detect (Dual wall)	NA	NA	None	Y	Y	N Did not Disable Well	2/6/17 13:31	KM	3	F	System does not differentiate between vault and dual wall.
Well 233 Leak Detect (Vault)	NA	NA	233 offline, unable to determine well shutdown. System Unaffected.	Y	Y	NA	2/6/17 14:02	KM	3	NA	
Well 233 Leak Detect (Dual wall)	NA	NA	"	Y	Y	NA	2/6/17 14:06	KM	2	NA	
Well 234 Leak Detect (Vault)	NA	NA	233 KM Turned off well 234	Y	Y	Y Auto Reset	2/6/17 14:46	KM	2	P	
Well 234 Leak Detect (Dual wall)	NA	NA	Turned off well 234	Y	Y	Y Auto Reset	2/6/17 14:44	KM	2	P	System does not differentiate between vault and dual wall.
Eastern Avenue Leak Detect (Vault)	NA	NA	Reported as 233 leak	Y	Y	NA	2/6/17 15:05	KM	2	F	Not reporting as Eastern Avenue...
Well Control House Leak Detect (Floor)	NA	NA	No alarm, no visualization Shutdown 234.	N	N	N	2/6/17 15:23	KM	2	F	No alarm reported
Well Control House Leak Detect (Dual Wall 8")	NA	NA	NA	NA	NA	NA	NA	NA	NA	NA	Unable to test as inaccessible
Louisiana Vault for 228 (Vault)	NA	NA	Reported as 228 Alarm No effect.	Y	Y	N Did not disable well	2/6/17 1547	KM	2	F	Not reporting as Louisiana.
Louisiana Vault for 228 (Dual Wall)	NA	NA	Reported as 228 Alarm No effect	Y	Y	N Did not Disable Well	2/6/17 1554	KM	2	F	Not reporting as Louisiana.
Louisiana LSH 8001 (Vault)	NA	NA	Not Reported. No effect	N	N	N Nothing Disabled.	2/6/17 1614	KM	2	F	Not reported

Date:	Loop Check					
Component	**Component Reading**	**HMI Reading from Componenet**	**Controlable from HMI (if applicable)**	**Date and Time**	**Operator**	**Notes**
Software ID	#	#	Y/N	MM/DD/YY 0000	Initials	
W228 Flowmeter	146.3 gpm	146 gpm	NA	02/06/17 13:38	KM	
W228 Totalizer	7.0093 MG	~~7.0093 KM~~ 263,426 gal	NA	02/06/17 13:38	KM	
W233 Flowmeter	0 gpm	0	~~NA~~ KM	02/06/17 1517	KM	Unable to test with Z33 offline.
W233 Totalizer	0 MG	7,084,600	~~NA~~ KM NA	02/06/17 1517	KM	
W239 Flowmeter	154.9 gpm	155 gpm	Yes	02/06/17 1519	KM	
W234 Totalizer	7.4803 MG	451,986 gal	NA	02/06/17 1519	KM	
W233 Pressure	- 0.15	0	NA	02/06/17 1517	KM	
W234 Pressure	18.10 psi	18 psi	NA	02/06/17 1519	KM	
W28 Pressure	60.29 psi	60 psi	NA	02/06/17 14:20	KM	

Date:	Status Indication Function						
Component	**Online and Ready Status (Blue)**	**Online Operating Status (Green)**	**Fault Status (Red)**	**Manual Override Status (Yellow)**	**Date and Time**	**Operator**	**Notes**
Software ID	Y/N	Y/N	Y/N	Y/N	MM/DD/YY 0000	Initials	
W228	Yes	Yes	N for leaks		2/6/17 0900	PF	Red: Yellow:
W233			N for leaks	No (Is blue in manual mode (icon)	2/6/17 0900		
W 234	Yes	Yes	N for leaks.		2/6/17 0900	PF	Red: Yellow:
P-112 A	Yes	Yes			2/6/17 0900	PF	Red: Yellow:
P-112B	Yes					PF	Red: Yellow:
P-118	Yes	Yes			2/6/17 0900	PF	Red: Yellow:
P-218	Yes	Yes			2/6/17 0900	PF	Red: Yellow:
P-212A	Yes	Yes					
P-212B	Yes						
TK-110 LSH	N/A	Yes	Yes	N/A	2/6/17 1120	PF	Tank Hi-Level
TK-110 LSL							
TK-116 LSH							
TK-116 LSL							
TK-210 LSH							
TK-210 LSL							
TK-216 LSH							
TK-216 LSL							
W228 Leak Alarm	NA	NA	Yes	NA	2/6/17 13:31	Km	Both Vault and Dual wall.
W233 Leak Alarm	NA	NA	Yes	NA	2/6/17 14:06	Km	Both Vault and Dual wall.
W234 Leak Alarm	NA	NA	Yes	NA	2/6/17 15:04	Km	Both vault and dual wall.

Summary of Operational Testing

07FEB2017 0725 Initiated test run of Treatment Train #2 to the golf course main pond.

- Began operation of the system by following the BFF Control Sequence provided by I&C Solutions. All listed items checked out as ready for operation.
- Set flow point on train #2 to 305 gpm and initialized the system.
- Train #2 ran similarly to that observed 06FEB2017.
- Concerns:
    - During startup the influent and effluent pumps often exceed the set point flowrate (370 gpm vs. 305 gpm), we suspect this arises from the upstream distribution pressure PID loop.
    - At this high of a flowrate the effluent pump undergoes noticeable cavitation.
    - Effluent tank reached low level set point and switch off the effluent pump. When the effluent pump reinitialized, the pump sounded like it was running under heavy load as the effluent valve was not reacting fast enough to the pumps needs, we suspect this arises from the upstream distribution pressure PID loop.

07FEB2017 1145 The test run of Treatment Train #2 was completed to allow alarm testing on Train #2.

- Shutdown occurred as observed 06FEB2017

07FEB2017 1146 Initiated test run of Treatment Train #1 to the golf course main pond.

- Began operation of the system by following the BFF Control Sequence provided by I&C Solutions. All listed items checked out as ready for operation.
- Set flow point on train #2 to 305 gpm and initialized the system.
    - Tested to see if system would operate with effluent pump in manual control. System faulted on the effluent pump and did not begin operation.
- 1148 Reset fault and returned effluent pump to auto control.
- Train #1 ran similarly to that observed 06FEB2017.
- Concerns:
    - During startup the influent and effluent pumps cycle on then off, and then back on again.
    - When the effluent pump initializes, the pump sounded like it was running under heavy load as the effluent valve was not reacting fast enough to the pumps needs, we suspect this arises from the upstream distribution pressure PID loop.

07FEB2017 1451 The test run of Treatment Train #1 was completed to allow for additional alarm testing on train #1.

- Shutdown occurred as observed 06FEB2017

07FEB2017 1453 Initiated test run of Treatment Train #2 to the golf course main pond.

- Began operation of the system by following the BFF Control Sequence provided by I&C Solutions. All listed items checked out as ready for operation.
- Set flow point on train #2 to 305 gpm and initialized the system.

- Train #2 ran similarly to that observed earlier in the day.

07FEB2017 1630 Completed the test run of Treatment Train #2.

- Shutdown occurred as observed earlier in the day

Proposed Testing Methods:

1. Panel Fuse/Breaker Method - This method will need to be used to evaluate the system's responses to alarms that are not easily simulated (pressure high levels, tank high levels, extraction well failures, etc.). This method employs the use of fuses which are set in wafer-like breakers in the HMI. Each fuse is associated with a different system alarm component and allows for the user to "flip" the fuses like breakers. Faulting these fuses individually would provide us a means to observe system responses without physically changing conditions. EA employees have observed this method being used by the previous contractor for similar testing.
2. System Assisted High Leveling - This method will need to be used to evaluate the triggering of alarms to physically changed conditions (level switches in the influent tanks) by changing only one system variable (flowrate set point) as manually running the extraction wells is logistically complicated. The proposed method will require that the system set point be set lower than the combined extraction well flowrates, in order to purposefully high level the influent tanks. This method employs the slow response of the system PID to purposefully cause the necessary fault condition. Once the influent tanks have triggered their high level alarms the system will be disabled and water will be manually moved through the remainder of the treatment train.

Date:	Alarm Verification										
Alarm	Set Point	Actual Point	System Effect	Alarm Reported to HMI	Alarm Remotely Notified	Reset/Remotely Operable	Date and Time Tested	Operator	Number of Times Tested	Pass/Fail	Notes
Code	#	#	Shutdown _____	Y/N	Y/N	Y/N (Manual or Auto)	MM/DD/YY 0000	Initials	#	P/F	
Train 1 Dist Press SW HI Effluent	50	55		Y	Y	Y Auto	02/07/17 1129	KM	2		
Train 2 Dist Press SW HI (Effluent skid)	~~65~~ 50 KM	85		Y	Y	Y Auto	02/07/17 1217	KM	2		
Effluent Train 2	40	765		N	N	N No Alarm	02/07/17 1249	KM	2	F	Did not alarm. Did not exceed 65psi.
Train 2 Feed Discharge Press SW HI (GAC)	40	35		Y	Y	Y Auto	02/07/17 1310	KM	2		
Intrusion alarm East door	NA	NA	None	N	N	N	02/07/17 1320	KM	2	F	No alarm
Intrusion alarm East bay door.	NA	NA	None	N	N	N	02/07/17 1321	KM	2	F	No alarm
Intrusion alarm Southeast doors	NA	NA	None	N	N	N	02/07/17 1322	KM	2	F	No alarm
Intrusion alarm Southwest doors.	NA	NA	None	N	N	N	02/07/17 1323	KM	2	F	No alarm.
Groundwater Feed Pump 212B Failed	NA	NA		Y	Y	Y Manual	02/07/17 1421	KM	2		
Groundwater Feed Pump 212A Failed	NA	NA		Y	Y	Y Manual	02/07/17 1421	KM	2		
Treated water Dist Pump 218 Failed	NA	NA		Y	Y	Y Manual	02/07/17 1420	KM	2		
Groundwater Feed Pump 112B Failed				Y	Y	Y Manual	02/07/17 1508	KM	2		Unable to clear Fault when faulted due to A
Groundwater Feed Pump 112A Failed				Y	Y	Y Manual	02/07/17 1511	KM	2		Faults 112B when reset on 112A
Treated water Dist Pump 118 Failed.				Y	Y	Y Manual	02/07/17 1513	KM	2		
Exterior E-Stop											
Interior E-Stop											
Well Control House E-Stop.											

Date:	Alarm Verification										
Alarm	**Set Point**	**Actual Point**	**System Effect**	**Alarm Reported to HMI**	**Alarm Remotely Notified**	**Reset/Remotely Operable**	**Date and Time Tested**	**Operator**	**Number of Times Tested**	**Pass/Fail**	**Notes**
Code	#	#	Shutdown _____	Y/N	Y/N	Y/N (Manual or Auto)	MM/DD/YY 0000	Initials	#	P/F	
Tank 110 Level SW HI	11.3	11.3	Shutdown All	Y	Y	Y	1/30/2017 15:46	KM	1	P	
Tank 210 Level SW HI	11	11	Did not shutdown	Y	Y	Y	1/30/2017 15:45	KM	1	F	
Tank 116 LEVEL SW LO	1.9	1.9	N/A	Y	Y	Y	1/30/2017 16:36	KM	1	N/A	System could not run in auto while simultaneously faulting this alarm
Tank 210 Lev SW HI	11	11	Turn off Extraction wells	Y	Y	Y Auto Reset	2/6/17 11:20	KM	1	P	System restarted extraction wells following alarm autoreset
Well 228 Leak Detect (Vault)	NA	NA	None	Y	Y	N Did not Disable well	2/6/17 12:51	KM	2	F	
Well 228 Leak Detect (Dual wall)	NA	NA	None	Y	Y	N Did not Disable Well	2/6/17 13:31	KM	3	F	System does not differentiate between vault and dual wall.
Well 233 Leak Detect (Vault)	NA	NA	233 offline, sonnable to determine well shutdown. System Unaffected.	Y	Y	NA	2/6/17 14:02	KM	3	NA	
Well 233 Leak Detect (Dual wall)	NA	NA	"	Y	Y	NA	2/6/17 14:06	KM	2	NA	
Well 234 Leak Detect (Vault)	NA	NA	233 KM Turned off well 234	Y	Y	Y Auto Reset	2/6/17 14:40	KM	2	P	
Well 234 Leak Detect (Dual wall)	NA	NA	Turned off well 234	Y	Y	Y Auto Reset	2/6/17 14:44	KM	2	P	System does not differentiate between vault and dual wall.
Eastern Avenue Leak Detect (Vault)	NA	NA	Reported as 233 leak	Y	Y	NA	2/6/17 15:05	KM	2	F	Not reporting as Eastern Avenue...
Well Control House Leak Detect (Floor)	NA	NA	No alarm, no visualization Shutdown 234.	N	N	N	2/6/17 15:23	KM	2	F	No alarm Reported
Well Control House Leak Detect (Dual Wall 8")	NA	NA	NA	NA	NA	NA	NA	NA	NA	NA	Unable to test as inaccessible
Louisiana Vault for 228 (Vault)	NA	NA	Reported as 228 Alarm No effect.	Y	Y	N Did not disable well	2/6/17 1547	KM	2	F	Not reporting as Louisiana.
Louisiana Vault for 228 (Dual Wall)	NA	NA	Reported as 228 Alarm No effect	Y	Y	N Did not Disable Well	2/6/17 1554	KM	2	F	Not reporting as Louisiana.
Louisiana LSH 8001 (Vault)	NA	NA	Not Reported. No effect	N	N	N Nothing Disabled.	2/6/17 1614	KM	2	F	Not reported
GWTS Internal Sump Trans 2go.	NA	NA	Not Reported No effect.	N	N	N Nothing Disabled	2/7/17 0841	KM	2	F	Not Report
GWTS Trunck Sump Trans 2go.	NA	NA	Not Reported No effect	N	N	N Nothing Disabled	2/7/17 0920	KM	2	F	Not Reported.
Influent Train 1 Fed Discharge Pressure SW HI	40	48		Y	Y	Y Auto	2/7/17 1011	KM	2		
Carbon absorber V114 AB Press SW HI	40	45		Y	Y	KM Y Auto	2/7/17 1034	KM	2		Also Alarmed V214 AB Press. SW HI

Date:	Loop Check					
Component	**Component Reading**	**HMI Reading from Componenet**	**Controlable from HMI (if applicable)**	**Date and Time**	**Operator**	**Notes**
Software ID	#	#	Y/N	MM/DD/YY 0000	Initials	
Train 2 Inf Totalizer	0.3176 MG	256,741 gal	NA	02/07/17 1529	KM	
Train 2 Eff Flowmeter	304.7 gpm	304 gpm	Y (train Control)	02/07/17 1530	KM	
Train 2 Eff Totalizer.	0.3137 MG	1,092,082 gal	NA	02/07/17 1530	KM	
Golf Course Main Pond Level						
Well 7 Flowmeter						
Well 7 Pressure						

Date:	Loop Check					
Component	**Component Reading**	**HMI Reading from Componenet**	**Controlable from HMI (if applicable)**	**Date and Time**	**Operator**	**Notes**
Software ID	#	#	Y/N	MM/DD/YY 0000	Initials	
W228 Flowmeter	146.3 gpm	146 gpm	NA	02/06/17 13:38	KM	
W228 Totalizer	7.0093 MG	~~7.0093 KM~~ 263,426 gal	NA	02/06/17 13:38	KM	
W233 Flowmeter	0 gpm	0	~~NA~~ KM	02/06/17 1517	KM	Unable to test with E33 offline.
W233 Totalizer	0 MG	7,084,600	~~NA~~ KM NA	02/06/17 1517	KM	
W234 Flowmeter	154.9 gpm	155 gpm	Yes	02/06/17 1519	KM	
W234 Totalizer	7.4803 MG	451,986 gal	NA	02/06/17 1519	KM	
W233 Pressure	- 0.15	0	NA	02/06/17 1517	KM	
W234 Pressure	18.10 psi	18 psi	NA	02/06/17 1519	KM	
W228 Pressure	60.29 psi	60 psi	NA	02/06/17 14:20	KM	
F-112A X Bag Filters	1.5520 psi	1.55 psi	NA	02/07/17 14:35	KM	
F-112B X Bag Filters	1.6819	1.69 psi	NA	02/07/17 14:37	KM	
Train 1 Int Flowmeter FIT-3102	305.3 gpm	305 gpm	Y (Train control)	02/07/17 14:41	KM	
Train 1 Int Totalizer	0.0829 MG	55,419 gal	NA	02/07/17 14:42	KM	
Train 1 ~~Int~~ Eff Flowmeter	305.2 gpm	305 gpm	X (Train Control)	02/07/17 14:44	KM	
Train 1 Eff Totalizer	14,1646 MG	14,108,158 gal	NA	02/07/17 14:45	KM	
Upstream PIT-3121	21.9 psi	20.2 psi	Y (PID)	02/07/17 14:50	KM	
Down Stream PIT-3130	3.80 psi	3.8 psi	NA	02/07/17 14:52	KM	
F-212A PDIT-3102 X Bag Filters	0.203 psi	0.20 psi	NA	02/07/17 15:26	KM	
F-212B X Bag Filters	0.248 psi	0.24 psi	NA	02/07/17 15:27	KM	
Train 2 Int Flowmeter	305.4 gpm	305 gpm	Y (Train Control)	02/07/17 15:29	KM	

Date:	Status Indication Function						
Component	**Online and Ready Status (Blue)**	**Online Operating Status (Green)**	**Fault Status (Red)**	**Manual Override Status (Yellow)**	**Date and Time**	**Operator**	**Notes**
Software ID	Y/N	Y/N	Y/N	Y/N	MM/DD/YY 0000	Initials	
Train 1 Int PSH	NA	Yes		NA			
Train 1 GAC PSH	NA	Yes		NA			
Train 1 EE PSH	NA	Yes		NA			
Train 2 PSH Int	NA	Yes		NA			
Train 2 GAC PSH	NA	Yes		NA			
Train 3 EE PSH	NA	Yes		NA			
WCH Leak Alarm (Vau17)	NA	NA	No	NA	02/06/17	KM	Did not show on HMI

Date: **Status Indication Function**

Component	Online and Ready Status (Blue)	Online Operating Status (Green)	Fault Status (Red)	Manual Override Status (Yellow)	Date and Time	Operator	Notes
Software ID	Y/N	Y/N	Y/N	Y/N	MM/DD/YY 0000	Initials	
W228	Yes	Yes	N for leaks		2/6/17 0900	PF	Red: Yellow:
W233			N for leaks	No (Is blue in manual mode (icon)	2/6/17 0900	Km	
W234	Yes	Yes	N for leaks.		2/6/17 0900	PF	Red: Yellow
P-112A	Yes	Yes	Yes	Yes	2/6/17 0900	PF	Red: 1508 Yellow: 1534
P-112B	Yes	Yes	Yes	Yes	02/7/17 1530	PF	Red: 1511 Yellow: 1535
P-118	Yes	Yes	Yes	Yes	2/6/17 0900	PF	Red: 1513 Yellow: 1536
P-218	Yes	Yes	Yes	Yes	2/6/17 0900	PF	Red: Yellow: 2/7/17 1415
P-212A	Yes	Yes	Yes	Yes	2/7/17 1413	Km	In manual mode is green until 1500 on
P-212B	Yes	Yes	Yes	Yes	2/7/17 1412	Km	
TK-110 LSH	N/A	Yes	Yes	N/A	2/6/17 1120	PF	Tank Hi-Level
TK-110 LSL	NA	Yes		NA			
TK-116 LSH	NA	Yes		NA			
TK-116 LSL	NA	Yes		NA			
TK-210 LSH	NA	Yes		NA			
TK-210 LSL	NA	Yes		NA			
TK-216 LSH	NA	Yes		NA			
TK-216 LSL	NA	Yes		NA			
W228 Leak Alarm	NA	NA	Yes	NA	2/6/17 13:31	Km	Both Vault and Dual wall.
W233 Leak Alarm	NA	NA	Yes	NA	2/6/17 14:06	Km	Both Vault and Dual wall.
W234 Leak Alarm	NA	NA	Yes	NA	2/6/17 15:04	Km	Both vault and dual wall.

Green before Yellow. (2/7/16)

Summary of Operational Testing

08FEB2017 0802 Initiated test run of Treatment Train #1 to the golf course main pond.

- Began operation of the system by following the BFF Control Sequence provided by I&C Solutions. All listed items checked out as ready for operation.
- Set flow point on train #1 to 305 gpm and initialized the system.
- Train #1 ran similarly to that observed 06FEB2017 and 07FEB2016.
- The system underwent multiple shutdowns during the day during alarm testing and to transfer flow from the golf course main pond to KAFB-7.
- Concerns:
    - A loop check on the tank transducers will be performed tomorrow as there is a discrepancy between the water levels in the tanks and those shown on the HMI.
    - A loop check will also need to be performed on KAFB-7's flow meter as while running the train 1 effluent pump in manual mode today, KAFB-7's flow meter recorded a flow rate exceeding 700 gpm.

08FEB2017 1145 The test run of Treatment Train #1 was completed to allow alarm testing on Train #1.

- Shutdown occurred as observed 06FEB2017

Below are three sets of items that require some resolution before continuing shakedown testing that were communicated to Ed Butler with Techsas.

Mechanical items:

I have attached four pictures of the mechanical items mentioned on our call.

The first two photos are of the newly installed influent pump A, which appears to be slowly leaking oil. Alex and Pete experienced this same issue on one of the existing influent skids. This pump will need to be inspected to determine the cause of the leak, and as of now I am not convinced running train two is a viable option until this is addressed.

The third and fourth photos show two butterfly valves on the newly installed effluent skid. The valve above the globe check valve did not seat properly during testing of the pressure switch. The valve proceeded to go beyond the closed position. The valve located immediately upstream of the southern bag filter also would not seat properly and pressure could not be increased on the line. This valve did not go beyond the closed position.

Programming items:

When operating both treatment trains in tandem, the two effluent pump oscillate between 130 and 170 gpm. This condition currently does not allow us to test the system in dual train operation mode for concern of harming the effluent pumps.

More programming items to follow upon completion of shakedown testing.

Testing Methodologies:

Ed please let me know that you acknowledge the two methods below as acceptable testing methods.

1. System Assisted High Leveling - This method will need to be used to evaluate the triggering of alarms to physically changed conditions (level switches in the influent tanks) by changing only one system variable (flow rate set point) as manually running the extraction wells is logistically complicated. The proposed method will require that the system flow rate set point be set lower than the combined extraction well flow rates, in order to purposefully high level the influent tanks. This method employs the slow response of the system PID to purposefully cause the necessary fault condition. Once the influent tanks have triggered their high level alarms the system will be disabled and water will be manually moved through the remainder of the treatment train in order to test alarms.

2. Pressure Switch Set Point Adjustment - This method will need to be used to evaluate the system's responses to alarms that are not easily simulated (pressure high levels). This method employs the physical changing of pressure switch set points. Each pressure switch will be tested by manually lowering the switch's set point to the operating pressure, thus triggering an alarm and associated system response. Each switch will be tested independently. Pressure switches will be returned to their appropriate set points following conclusion of the testing.

Both methodologies were accepted by Ed during a phone conversation at 1433 on 08FEB2017. In addition, Ed approved that EA can increase the system flow rate set point tomorrow to accommodate IDW and development water treatment through the system up to a flow rate of 400 gpm.

Date:

Alarm Verification

Alarm	Set Point	Actual Point	System Effect	Alarm Reported to HMI	Alarm Remotely Notified	Reset/Remotely Operable	Date and Time Tested	Operator	Number of Times Tested	Pass/Fail	Notes
Code	#	#	Shutdown ___________	Y/N	Y/N	Y/N (Manual or Auto)	MM/DD/YY 0000	Initials	#	P/F	
Tank 216 level SWHI		11.45		Y	Y		02/08/17 13:04	Km	1		
Tank 110 Low level	1.	1.68		Y	Y		02/08/17 1335	KM	1		
Tank 210 level SWLO		1.69		Y	Y		02/08/17 1340	KM	1		
Tank 216 level SWLO		1.64		Y	Y		02/08/17 1732	Km	1		

Date:	Alarm Verification									
Alarm	**Set Point**	**Actual Point**	**System Effect**	**Alarm Reported to HMI**	**Alarm Remotely Notified**	**Reset/Remotely Operable**	**Date and Time Tested**	**Operator**	**Number of Times Tested**	**Pass/Fail**	**Notes**
Code	#	#	Shutdown _____	Y/N	Y/N	Y/N (Manual or Auto)	MM/DD/YY 0000	Initials	#	P/F	
Train 1 Dist Press SW HI Effluent	50	55	No effect	Y	Y	Y Auto	02/07/17 1129	KM	2	F	No effect.
Train 2 Dist Press SW HI (Effluent spec)	~~65~~ 50 psi	85		Y	Y	Y Auto	02/07/17 1217	KM	2		
Influent Train 2	40	>65	No alarm, no effect.	N	N	N No Alarm	02/07/17 1249	KM	2	F	Did not alarm. Did not exceed 65psi.
Train 2 Feed Discharge Press SW HI (GAC)	40	35		Y	Y	Y Auto	02/07/17 1310	KM	2		
Intrusion alarm East door	NA	NA	None	N	N	N	02/07/17 1320	KM	2	F	No alarm
Intrusion alarm East bay door.	NA	NA	None	N	N	N	02/07/17 1321	KM	2	F	No alarm
Intrusion alarm Southeast doors	NA	NA	None	N	N	N	02/07/17 1322	KM	2	F	No alarm
Intrusion alarm Southwest doors.	NA	NA	None	N	N	N	02/07/17 1323	KM	2	F	No alarm.
Groundwater Feed Pump 212B Failed	NA	NA		Y	Y	Y Manual	02/07/17 1421	KM	2		
Groundwater Feed Pump 212A Failed	NA	NA		Y	Y	Y Manual	02/07/17 1421	KM	2		
Treated water Dist Pump 218 Failed	NA	NA		Y	Y	Y Manual	02/07/17 1420	KM	2		
Groundwater Feed Pump 112B Failed	NA	NA		Y	Y	Y Manual	02/07/17 1508	KM	2		Unable to clear Fault ← when faulted due to A
Groundwater Feed Pump 112A Failed	NA	NA		Y	Y	Y Manual	02/07/17 1511	KM	2		Faults 112B when reset on 112A
Treated water Dist Pump 118 Failed.	NA	NA		Y	Y	Y Manual	02/07/17 1513	KM	2		
~~Exterior~~ E-Stop In	NA	NA	All Shutdown	Y	Y	Y Manual	02/08/17 1530	KM	2	P	Extraction well Pump 101 Fail alarm.
~~Exterior~~ E-Stop Ex	NA	NA	No Effect No Alarm	N	N	N	02/08/17 1535	KM	2	F	No Alarm. Not hooked up.
Well Control House E-Stop.	NA	NA									
Tank 110 Level SW HI		11.30	Unable to determine	Y	Y		02/08/17 12:29	KM	1		
Tank 210 Level SW HI		10.95	Shutdown extraction Wells	Y	Y	Y Auto	02/08/17 12:13	KM	1	P	
Tank 116 Level SW HI		11.54		Y	Y		02/08/17 12:49	KM	1		

Date:

Alarm Verification

Alarm	Set Point	Actual Point	System Effect	Alarm Reported to HMI	Alarm Remotely Notified	Reset/Remotely Operable	Date and Time Tested	Operator	Number of Times Tested	Pass/Fail	Notes
Code	#	#	Shutdown _____	Y/N	Y/N	Y/N (Manual or Auto)	MM/DD/YY 0000	Initials	#	P/F	
Tank 110 Level SW HI	11.3	11.3	Shutdown All	Y	Y	Y	1/30/2017 15:46	KM	1	P	
Tank 210 Level SW HI	11	11	Did not shutdown	Y	Y	Y	1/30/2017 15:45	KM	1	F	
Tank 116 LEVEL SW LO	1.9	1.9	N/A	Y	Y	Y	1/30/2017 16:36	KM	1	N/A	System could not run in auto while simultaneously faulting this alarm
Tank 210 Lel Sw HI	11	11	Turn off Extraction wells	Y	Y	Y Auto Reset	2/6/17 11:20	Km	1	P	System restarted extraction wells following alarm entercept
Well 228 Leak Detect (Vault)	NA	NA	None	Y	Y	N Did not Disable well	2/6/17 12:51	KM	2	F	
Well 228 Leak Detect (Dual wall)	NA	NA	None	Y	Y	N Did not Disable Well	2/6/17 13:31	KM	3	F	System does not differentiate between vault and dual wall.
Well 233 Leak Detect (Vault)	NA	NA	233 offline, sonnable to detect well shutdown. System Updated.	Y	Y	NA	2/6/17 14:02	Km	3	NA	
Well 233 Leak Detect (Dual wall)	NA	NA	"	Y	Y	NA	2/6/17 14:06	Km	2	NA	
Well 234 Leak Detect (Vault)	NA	NA	233 Km Turned off well 234	Y	Y	Y Auto Reset	2/6/17 14:40	Km	2	P	
Well 234 Leak Detect (Dual wall)	NA	NA	Turned off well 234	Y	Y	Y Auto Reset	2/6/17 14:44	KM	2	P	System does not differentiate between vault and dual wall.
Eastern Avenue Leak Detect (Vault)	NA	NA	Reported as 233 leak	Y	Y	NA	2/6/17 15:05	Km	2	F	Not reporting as Eastern Avenue...
Well Control House Leak Detect (Floor)	NA	NA	No alarm, no visualization Shutdown 234.	N	N	N	2/6/17 15:23	Km	2	F	No alarm Reported
Well Control House Leak Detect (Dual Wall 8")	NA	NA	NA	NA	NA	NA	NA	NA	NA	NA	Unable to test as inaccessible
Louisiana Vault for 228 (Vault)	NA	NA	Reported as 228 Alarm No effect.	Y	Y	N Did not disable well	2/6/17 1547	Km	2	F	Not reporting as Louisiana.
Louisiana Vault for 228 (Dual Wall)	NA	NA	Reported as 228 Alarm No effect	Y	Y	N Did not Disable Well	2/6/17 1554	Km	2	F	Not reporting as Louisiana.
Louisiana LSH 8001 (Vault)	NA	NA	Not Reported. No effect	N	N	N Nothing Disabled.	2/6/17 1614	KM	2	F	Not reported
GWTS Internal Sump Train 2go.	NA	NA	Not Reported No effect	N	N	N Nothing Disabled	2/7/17 08 41	KM	2	F	Not Report
GWTS Trunk Sump Train 2go.	NA	NA	Not Reported No effect	N	N	N Nothing Disabled	2/7/17 0920	Km	2	F	Not Reported.
Influent Train 1 Feed Discharge Pressure SW HI	40	48	No effect	Y	Y	Y Auto	2/7/17 1011	Km	2	F	No effect
Carbon absorber V114 AB Press SW HI	40	45	Shut off Tnt + Eff Skids (Wells still Running)	Y	Y	Y Km Auto	2/7/17 1034	Km	2	P, but full of would be reported	Also Alarmed V244 AB Press. SW HI

Date:	Loop Check					
Component	**Component Reading**	**HMI Reading from Componenet**	**Controlable from HMI (if applicable)**	**Date and Time**	**Operator**	**Notes**
Software ID	#	#	Y/N	MM/DD/YY 0000	Initials	
Train 2 Inf Totalizer	0.3176 MG	256,741 gal	NA	02/07/17 1529	KM	
Train 2 Eff Flowmeter	304.7 gpm	304 gpm	Y (train Control)	02/07/17 1530	KM	
Train 2 Eff Totalizer.	0.3137 MG	1,092,082 gal	NA	02/07/17 1530	KM	
Golf Course Pond Level						
Well 7 Flowmeter						
Well 7 Pressure						

Date:

Loop Check

Component	Component Reading	HMI Reading from Componenet	Controlable from HMI (if applicable)	Date and Time	Operator	Notes
Software ID	#	#	Y/N	MM/DD/YY 0000	Initials	
W228 Flowmeter	146.3 gpm	146 gpm	NA	02/06/17 13:38	KM	
W228 Totalizer	7.0093 MG	~~7.0093~~ KM 263,426 gal	NA	02/06/17 13:38	KM	
W233 Flowmeter	0 gpm	0	~~NA~~ KM	02/06/17 1517	KM	Unable to test with Z33 offline.
W233 Totalizer	0 MG	7,084,600	~~NA~~ KM NA	02/06/17 1517	KM	
W234 Flowmeter	154.9 gpm	155 gpm	Yes	02/06/17 1519	KM	
W234 Totalizer	7.4803 MG	481,986 gal	NA	02/06/17 1519	KM	
W233 Pressure	- 0.15	0	NA	02/06/17 1517	KM	
W234 Pressure	18.10 psi	18 psi	NA	02/06/17 1519	KM	
W228 Pressure	60.29 psi	60 psi	NA	02/06/17 14:20	KM	
F-112A X Bag Filters	1.5520 psi	1.55 psi	NA	02/07/17 14:35	KM	
F-112B X Bag Filters	1.6819	1.69 psi	NA	02/07/17 14:37	KM	
Train 1 Feed Flowmeter FIT-3102	305.3 gpm	305 gpm	Y (Train Control)	02/07/17 14:41	KM	
Train 1 Int Totalizer	0.0829 MG	555,419 gal	NA	02/07/17 14:42	KM	
Train 1 ~~Eff~~ Feed Flowmeter	305.2 gpm	305 gpm	~~X~~ (Train Control)	02/07/17 14:44	KM	
Train 1 ~~Eff~~ Totalizer	14,1646 MG	14,108,158 gal	NA	02/07/17 14:45	KM	
Upstream PIT-3121	21.9 psi	20.2 psi	Y (PID)	02/07/17 14:50	KM	
Down Stream PIT-3130	3.80 psi	3.8 psi	NA	02/07/17 14:52	KM	
F-212A ~~PDIT-3102~~ X Bag Filters	0.203 psi	0.20 psi	NA	02/07/17 15:26	KM	
F-212B X Bag Filters	0.248 psi	0.24 psi	NA	02/07/17 15:27	KM	
Train 2 Int Flowmeter	305.4 gpm	305 gpm	Y (Train Control)	02/07/17 15:29	KM	

Date:

Status Indication Function

Component	Online and Ready Status (Blue)	Online Operating Status (Green)	Fault Status (Red)	Manual Override Status (Yellow)	Date and Time	Operator	Notes
Software ID	Y/N	Y/N	Y/N	Y/N	MM/DD/YY 0000	Initials	
Train 1 Int PSH	NA	Yes	Yes	NA	02/08/17 1456	KM	
Train 1 GAC PSH	NA	Yes	Yes	NA	02/08/17 1517	KM	
Train 1 ECL PSH	NA	Yes	Yes	NA	02/06/17 1525	KM	
Train 2 PSH Int	NA	Yes		NA			
Train 2 GAC PSH	NA	Yes		NA			
Train 3 ECL PSH	NA	Yes		NA			
WCH Leak Alarm (Vault 7)	NA	NA	No	NA	02/06/17 1523	KM	Did not alarm nor show on HMI
Eastern Ave Vault leak Alarm	NA	NA	No	NA	02/06/17 1505	KM	Did not appear on HMI as Eastern Ave
Louisiana Vault leak alarm (223)	NA	NA	No	NA	02/06/17 1547	KM	Did not appear as Louisiana 228
Louisiana Vault Leak (233+234)	NA	NA	No	NA	02/06/17 1614	KM	Did not alarm no open recc.

Date:

Status Indication Function

Component	Online and Ready Status (Blue)	Online Operating Status (Green)	Fault Status (Red)	Manual Override Status (Yellow)	Date and Time	Operator	Notes
Software ID	Y/N	Y/N	Y/N	Y/N	MM/DD/YY 0000	Initials	
W228	Yes	Yes	N for leaks		2/6/17 0900	PF	Red: Yellow:
W233			N for leaks	No (Is blue in manual mode (icon) ~~Yellow~~	2/6/17 0900	Km	Yellow only when running and cannot run.
W234	Yes	Yes	N for leaks.	Yes	2/6/17 0900	PF	Red: Yellow: 1229 (2/8)
P-112A	Yes	Yes	Yes	Yes	2/6/17 0900	PF	Red: 1508 Yellow: 1534
P-112B	Yes	Yes	Yes	Yes	02/7/17 1530	PF	Red: 1511 Yellow: 1535
P-118	Yes	Yes	Yes	Yes	2/6/17 0900	PF	Red: 1513 Yellow: 1536
P-218	Yes	Yes	Yes	Yes	2/6/17 0900	PF	Red: Yellow: 2/7/17 HK
P-212A	Yes	Yes	Yes	Yes	2/9/17 1413	Km	In manual mode is green until 1500 on
P-212B	Yes	Yes	Yes	Yes	2/7/17 1412	Km	
TK-110 LSH	N/A	Yes	Yes	N/A	2/6/17 1120	PF	Tank Hi-Level
TK-110 LSL	NA	Yes	Yes	NA	2/8/17 1342	Km	
TK-116 LSH	NA	Yes	Yes	NA	2/8/17 1250	Km	
TK-116 LSL	NA	Yes	Yes	NA	2/8/17 1636 1/30	Km	
TK-210 LSH	NA	Yes	Yes	NA	2/8/17 ~~1250~~ 1229	Km	
TK-210 LSL	NA	Yes	Yes	NA	2/8/17 1342	Km	
TK-216 LSH	NA	Yes	Yes	NA	2/8/17 1342	Km	
TK-216 LSL	NA	Yes	Yes	NA	2/8/17 1532	Km	
W228 Leak Alarm	NA	NA	Yes	NA	2/6/17 13:31	Km	Both Vault and Dual wall.
W233 Leak Alarm	NA	NA	Yes	NA	2/6/17 14:06	Km	Both Vault and Dual wall.
W234 Leak Alarm	NA	NA	Yes	NA	2/6/17 15:04	Km	Both vault and dual wall.

Green before Yellow. (2/7/17)

Summary of Operational Testing

09FEB2017 0913 Initiated test run of Treatment Train #1 to the golf course main pond.

- Began operation of the system by following the BFF Control Sequence provided by I&C Solutions. All listed items checked out as ready for operation.
- Set flow point on train #1 to 325 gpm and initialized the system.
- The influent pump did not respond to the call for operation and while online was only operating at 12 Hz. This caused the influent tank to high level.
- Train #1 was turned offline and water was transferred manual through the train.
- During this time tank 210 and pump 212B alarmed without reason and without causing a status change on the HMI.

09FEB2017 1015 Noticed bag filter pressure increased during manual running of Train #1. Bag filters were changed in the event that the bag filter pressure may have tripped an alarm that was not reported.

09FEB2017 1030 Initiated a second test run of Treatment Train #1 to the golf course main pond.

- Began operation of the system by following the BFF Control Sequence provided by I&C Solutions. All listed items checked out as ready for operation.
- Set flow point on train #1 to 305 gpm and initialized the system.
- The influent pump did not respond to the call for operation and while online was only operating at 12 Hz. This caused the influent tank to high level.
- Train #1 was turned offline and water was transferred manual through the train for the remainder of the day.

Shakedown testing could not be continued today since the system unexpectedly did not respond correctly to the train control on switch.

Date:				Alarm Verification							
Alarm	Set Point	Actual Point	System Effect	Alarm Reported to HMI	Alarm Remotely Notified	Reset/Remotely Operable	Date and Time Tested	Operator	Number of Times Tested	Pass/Fail	Notes
Code	#	#	Shutdown _____	Y/N	Y/N	Y/N (Manual or Auto)	MM/DD/YY 0000	Initials	#	P/F	
Tank 216 Level SW HI		11.45		Y	Y		02/08/17 13:04	KM	1		
Tank 110 Low Level	1.	1.68		Y	Y		02/08/17 1335	KM	1		
Tank 210 Level SW LO		1.69		Y	Y		02/08/17 1340	KM	1		
Tank 216 Level SW LO		1.64		Y	Y		02/08/17 1732	KM	1		

Date:	Alarm Verification										
Alarm	**Set Point**	**Actual Point**	**System Effect**	**Alarm Reported to HMI**	**Alarm Remotely Notified**	**Reset/Remotely Operable**	**Date and Time Tested**	**Operator**	**Number of Times Tested**	**Pass/Fail**	**Notes**
Code	#	#	Shutdown _____	Y/N	Y/N	Y/N (Manual or Auto)	MM/DD/YY 0000	Initials	#	P/F	
Train 1 Dist Press SW HI Effluent	50	55	No effect	Y	Y	Y Auto	02/07/17 1129	KM	2	F	No effect.
Train 2 Dist Press SW HI (Effluent skid)	~~65~~ 50 KM	85		Y	Y	Y Auto	02/07/17 1217	KM	2		
Influent Train 2	40	765	No alarm, no effect.	N	N	N No Alarm	02/07/17 1249	KM	2	F	Did not alarm. Did not exceed 65psi.
Train 2 Feed/Discharge Press SW HI (GAC)	40	35		Y	Y	Y Auto	02/07/17 1310	KM	2		
Intrusion alarm East door	NA	NA	None	N	N	N	02/07/17 1320	KM	2	F	No alarm
Intrusion alarm East bay door.	NA	NA	None	N	N	N	02/07/17 1321	KM	2	F	No alarm
Intrusion alarm Southeast doors	NA	NA	None	N	N	N	02/07/17 1322	KM	2	F	No alarm
Intrusion alarm Southwest doors.	NA	NA	None	N	N	N	02/07/17 1323	KM	2	F	No alarm.
Groundwater Feed Pump 212B Failed	NA	NA		Y	Y	Y Manual	02/07/17 1421	KM	2		
Groundwater Feed Pump 212A Failed	NA	NA		Y	Y	Y Manual	02/07/17 1421	KM	2		
Treated water Dist Pump 218 Failed	NA	NA		Y	Y	Y Manual	02/07/17 1420	KM	2		
Groundwater Feed Pump 112B Failed	NA	NA		Y	Y	Y Manual	02/07/17 1508	KM	2		Unable to clear Fault & when faulted due to A
Groundwater Feed Pump 112A Failed	NA	NA		Y	Y	Y Manual	02/07/17 1511	KM	2		Faults 112B when reset on 112A
Treated water Dist Pump 118 Failed.	NA	NA		Y	Y	Y Manual	02/07/17 1513	KM	2		
~~Exterior~~ E-Stop In	NA	NA	All Shutdown	Y	Y	Y Manual	02/08/17 1530	KM	2	P	Extraction well Pump 101 Failed alarm.
~~Exterior~~ E-Stop Ex	NA	NA	No Effect No Alarm	N	N	N	02/08/17 1535	KM	2	F	No Alarm. Not hooked up.
Well Control House E-Stop.	NA	NA									
Tank 110 Level SW HI		11.30	Unable to determine	Y	Y		02/08/17 12:29	KM	1		
Tank 210 Level SW HI		10.95	Shutdown extraction Wells	Y	Y	Y Auto	02/08/17 12:13	KM	1	P	
Tank 116 Level SW HI		11.54		Y	Y		02/08/17 12:49	KM	1		

Date:	Alarm Verification										
Alarm	**Set Point**	**Actual Point**	**System Effect**	**Alarm Reported to HMI**	**Alarm Remotely Notified**	**Reset/Remotely Operable**	**Date and Time Tested**	**Operator**	**Number of Times Tested**	**Pass/Fail**	**Notes**
Code	#	#	Shutdown _____	Y/N	Y/N	Y/N (Manual or Auto)	MM/DD/YY 0000	Initials	#	P/F	
Tank 110 Level SW HI	11.3	11.3	Shutdown All	Y	Y	Y	1/30/2017 15:46	KM	1	P	
Tank 210 Level SW HI	11	11	Did not shutdown	Y	Y	Y	1/30/2017 15:45	KM	1	F	
Tank 116 LEVEL SW LO	1.9	1.9	N/A	Y	Y	Y	1/30/2017 16:36	KM	1	N/A	System could not run in auto while simultaneously faulting this alarm
Tank 210 Lel SW HI	11	11	Turn off Extraction wells	Y	Y	Y Auto Reset	2/6/17 11:20	Km	1	P	System restarted extraction wells following alarm entered
Well 228 Leak Detect (Vault)	NA	NA	None	Y	Y	N Did not Disable well	2/6/17 12:51	KM	2	F	
Well 228 Leak Detect (Dual Wall)	NA	NA	None	Y	Y	N Did not Disable Well	2/6/17 13:31	KM	3	F	System does not differentiate between vault and dual wall.
Well 233 Leak Detect (Vault)	NA	NA	233 offline, unable to determine well shutdown. System Unaffected.	Y	Y	NA	2/6/17 14:02	KM	3	NA	
Well 233 Leak Detect (Dual Wall)	NA	NA	"	Y	Y	NA	2/6/17 14:06	KM	2	NA	
Well 234 Leak Detect (Vault)	NA	NA	~~233~~ Km Turned off well 234	Y	Y	Y Auto Reset	2/6/17 14:40	KM	2	P	
Well 234 Leak Detect (Dual Wall)	NA	NA	Turned off well 234	Y	Y	Y Auto Reset	2/6/17 14:44	KM	2	P	System does not differentiate between vault and dual wall.
Eastern Avenue Leak Detect (Vault)	NA	NA	Reported as 233 leak	Y	Y	NA	2/6/17 15:05	Km	2	F	Not reporting as Eastern Avenue...
Well Control House Leak Detect (Floor)	NA	NA	No alarm, no visualization Shutdown 234.	N	N	N	2/6/17 15:23	Km	2	F	No alarm Reported
Well Control House Leak Detect (Dual Wall 8")	NA	NA	NA	NA	NA	NA	NA	NA	NA	NA	Unable to test as inaccessible
Louisiana Vault for 228 (Vault)	NA	NA	Reported as 228 Alarm No effect.	Y	Y	N Did not disable well	2/6/17 1547	Km	2	F	Not reporting as Louisiana.
Louisiana Vault for 228 (Dual Wall)	NA	NA	Reported as 228 Alarm No effect	Y	Y	N Did not Disable Well	2/6/17 1554	Km	2	F	Not reporting as Louisiana.
Louisiana LSH 8001 (Vault)	NA	NA	Not Reported. No effect	N	N	N Nothing Disabled.	2/6/17 1614	KM	2	F	Not reported
GWTS Internal Sump Trans 2gp.	NA	NA	Not Reported No effect.	N	N	N Nothing Disabled	2/7/17 0841	KM	2	F	Not Report
GWTS Trench Sump Trans 2gp.	NA	NA	Not Reported No effect	N	N	N Nothing Disabled	2/7/17 0920	Km	2	F	Not Reported.
Influent Train 1 Feed Discharge Pressure SW HI	40	48	No effect	Y	Y	Y Auto	2/7/17 1011	Km	2	F	No effect
Carbon absorber V114 AB Press SW HI	40	45	Shut off Inf + Eff Skids (Wells still Running)	Y	Y	~~Y~~ Km Y Auto	2/7/17 1034	Km	2	P, but fail otherwise would be entered.	Also Alarmed V214 AB Press. SW HI

Date:	Loop Check					
Component	**Component Reading**	**HMI Reading from Componenet**	**Controlable from HMI (if applicable)**	**Date and Time**	**Operator**	**Notes**
Software ID	#	#	Y/N	MM/DD/YY 0000	Initials	
Train 2 Int Totalizer	0.3176 MG	256,741 gal	NA	02/07/17 1529	KM	
Train 2 Eff Flowmeter	304.7 gpm	304 gpm	Y (train Control)	02/07/17 1530	KM	
Train 2 Eff Totalizer.	0.3137 MG	1,092,082 gal	NA	02/07/17 1530	KM	
Golf Course Main Pond Level						
Well 7 Flowmeter						
Well 7 Pressure						

Date:	Loop Check					
Component	**Component Reading**	**HMI Reading from Componenet**	**Controlable from HMI (if applicable)**	**Date and Time**	**Operator**	**Notes**
Software ID	#	#	Y/N	MM/DD/YY 0000	Initials	
W228 Flowmeter	146.3 gpm	146 gpm	NA	02/06/17 13:38	KM	
W228 Totalizer	7.0093 MG	~~7.0093 KM~~ 263,426 gal	NA	02/06/17 13:38	KM	
W233 Flowmeter	0 gpm	0	~~NA~~ KM	02/06/17 1517	KM	Unable to test with 233 offline.
W233 Totalizer	0 MG	7,084,600	~~NA~~ KM NA	02/06/17 1517	KM	
W234 Flowmeter	154.9 gpm	155 gpm	Yes	02/06/17 1519	KM	
W234 Totalizer	7.4803 MG	451,986 gal	NA	02/06/17 1519	KM	
W233 Pressure	- 0.15	0	NA	02/06/17 1517	KM	
W234 Pressure	18.10 psi	18 psi	NA	02/06/17 1519	KM	
W28 Pressure	60.29 psi	60 psi	NA	02/06/17 14:20	KM	
F-112A X Bag Filters	1.5520 psi	1.55 psi	NA	02/07/17 14:35	KM	
F-112B X Bag Filters	1.6819	1.69 psi	NA	02/07/17 14:37	KM	
Train 1 Feed Flowmeter FIT-3102	305.3 gpm	305 gpm	Y (Train control)	02/07/17 14:41	KM	
Train 1 Int Totalizer	0.0829 MG	55,419 gal	NA	02/07/17 14:42	KM	
Train 1 ~~Feed~~ Eff Flowmeter	305.2 gpm	305 gpm	X (Train Control)	02/07/17 14:44	KM	
Train 1 Eff Totalizer	14,1646 MG	14,108,158 gal	NA	02/07/17 14:45	KM	
Upstream PIT-3121	21.9 psi	20.2 psi	Y (PID)	02/07/17 14:50	KM	
Down Stream PIT-3130	3.80 psi	3.8 psi	NA	02/07/17 14:52	KM	
F-212A PDIT-3202 X Bag Filters	0.203 psi	0.20 psi	NA	02/07/17 15:26	KM	
F-212B X Bag Filters	0.248 psi	0.24 psi	NA	02/07/17 15:27	KM	
Train 2 Int Flowmeter	305.4 gpm	305 gpm	Y (Train Control)	02/07/17 15:29	KM	

Date:	Status Indication Function						
Component	**Online and Ready Status (Blue)**	**Online Operating Status (Green)**	**Fault Status (Red)**	**Manual Override Status (Yellow)**	**Date and Time**	**Operator**	**Notes**
Software ID	Y/N	Y/N	Y/N	Y/N	MM/DD/YY 0000	Initials	
Train 1 Int PSH	NA	Yes	Yes	NA	02/08/17 1456	KM	
Train 1 GAC PSH	NA	Yes	Yes	NA	02/08/17 1517	KM	
Train 1 EE PSH	NA	Yes	Yes	NA	02/08/17 1525	KM	
Train 2 PSH Int	NA	Yes		NA			
Train 2 GAC PSH	NA	Yes		NA			
Train 3 EE PSH	NA	Yes		NA			
WCH Leak Alarm (Vault 7)	NA	NA	No	NA	02/06/17 1523	KM	Did not alarm nor show on HMI
Eastern Ave Vault leak Alarm	NA	NA	No	NA	02/06/17 1505	KM	Did not appear on HMI as Eastern Ave
Louisiana Vault leak alarm (228)	NA	NA	No	NA	02/06/17 1547	KM	Did not appear as Louisiana 228
Louisiana Vault leak (233+234)	NA	NA	No	NA	02/06/17 1614	KM	Did not alarm no appearance.

Date:	Status Indication Function						
Component	**Online and Ready Status (Blue)**	**Online Operating Status (Green)**	**Fault Status (Red)**	**Manual Override Status (Yellow)**	**Date and Time**	**Operator**	**Notes**
Software ID	Y/N	Y/N	Y/N	Y/N	MM/DD/YY 0000	Initials	
W228	Yes	Yes	N for leaks		2/6/17 0900	PF	Red: Yellow:
W233			N for leaks	No (Is blue in manual mode (icon) ~~Yellow~~ KM	2/6/17 0900	KM	Yellow only when running and cannot run.
W234	Yes	Yes	N for leaks.	Yes	2/6/17 0900	PF	Red: Yellow: 1229 (2/8)
P-112A	Yes	Yes	Yes	Yes	2/6/17 0900	PF	Red: 1508 Yellow: 1534
P-112B	Yes	Yes	Yes	Yes	02/7/17 1530	PF	Red: 1511 Yellow: 1535
P-118	Yes	Yes	Yes	Yes	2/6/17 0900	PF	Red: 1513 Yellow: 1536
P-218	Yes	Yes	Yes	Yes	2/6/17 0900	PF	Red: Yellow: 2/7/17 1415
P-212A	Yes	Yes	Yes	Yes	2/7/17 1413	KM	In manual mode is green until 1500 gpm
P-212B	Yes	Yes	Yes	Yes	2/7/17 1412	KM	
TK-110 LSH	N/A	Yes	Yes	N/A	2/6/17 1120	PF	Tank Hi-Level
TK-110 LSL	NA	Yes	Yes	NA	2/8/17 1342	KM	
TK-116 LSH	NA	Yes	Yes	NA	2/8/17 1250	KM	
TK-116 LSL	NA	Yes	Yes	NA	~~2/8/17~~ 1/30 16:36	KM	
TK-210 LSH	NA	Yes	Yes	NA	2/8/17 ~~1250~~ 1229	KM	
TK-210 LSL	NA	Yes	Yes	NA	2/8/17 1342	KM	
TK-216 LSH	NA	Yes	Yes	NA	2/8/17 1342	KM	
TK-216 LSL	NA	Yes	Yes	NA	2/8/17 1532	KM	
W228 Leak Alarm	NA	NA	Yes	NA	2/6/17 13:31	KM	Both Vault and Dual wall.
W233 Leak Alarm	NA	NA	Yes	NA	2/6/17 14:06	KM	Both Vault and Dual wall.
W234 Leak Alarm	NA	NA	Yes	NA	2/6/17 15:04	KM	Both vault and dual wall.

Green before Yellow. (2/7/16)

PUNCH LISTS

Kirtland BFF GWTS Expansion Completion Checklist

Item #	Task	Action	Inspected By	Date Last Inspected	Date Completed	Notes
1	Complete all wiring in control panel and provide proper cable management within control panel box. Update or replace outdated info sheets on inside doors. Clear unused equipment.	ICS will complete early next week, expected to be completed by 1/24/17	LLR	1/20/2017	2/1/2017	
2	Cable from control panel to radio is hanging and tied with piece of wire. Secure permanently.	Techsas will ensure this cable is secured by 1/25/17	LLR	1/20/2017	2/1/2017	
3	What is the purpose of unused flexible conduit on existing discharge pump skid?	This is an extra conduit and has been removed.	LLR	1/20/2017	1/20/2017	
4	Complete one final pass around system with touch up paint. Repair all chips and light paint areas that are found. Clean surfaces before reapplying paint.	Techsas will complete final paint touch up by 1/25/17	LLR	1/20/2017	2/2/2017	
5	Before final demobilization, clean all tools, spare equipment, and unused materials. Organize and store all spare equipment together on site.	Techsas will complete final clean up on 1/25/17	LLR	1/20/2017	2/1/2017	
6	Install sample ports on all expansion bag filters.	Techsas has parts and will complete installation by 1/25/17	LLR	1/20/2017	1/24/2017	
7	Install sample ports on feed and discharge pump skid, on pump discharge pipe.	Techsas will complete installation on 1/25/17	LLR	1/20/2017	1/23/2017	
8	Install end caps on conduits for flow meter cables. Required on both existing and expansion discharge pump.	Techsas will ensure this is corrected by 1/25/17	LLR	1/20/2017	1/24/2017	
9	The Globe Style “Silent” Check Valve on the existing effluent pump continues to rattle when the discharge pressure is low.	It is anticipated that adding pressure to the pump discharge will reduce rattle in this check valve. Therefore completing the automation of the effluent valve is expected to resolve this issue. The rattle will be checked for after setting a back pressure on the pump on 1/24/17, and pressure will be adjusted if the rattle continues. If back pressure does not stop rattle, condition will be noted and item will be completed.	LLR	1/20/2017	1/25/2017	Pressure has been increased, some rattling can still be heard, will need further adjustment during shakedown.
10	The existing discharge pump Mcrometer Vcone flow meter is still connected to the pump control panel through a flexible conduit. Complete the removal of this flow meter.	Completed	LLR	1/20/2017	1/20/2017	
11	Wiring to the pressure gauges on the effluent Christmas tree is not finished. Complete this installation.	ICS completed installation.	LLR	1/20/2017	1/19/2017	
12	Install a pressure gauge on the expansion discharge pump skid (open port at eye level above pump).	Techsas has the part on hand and will complete installation by 1/25/17	LLR	1/20/2017	1/23/2017	
13	Remove foam packaging from pump skids and plastic bags from bag filters, install bag filter lid wheel handles	Techsas will complete by 1/25/17	LLR	1/20/2017	1/24/2017	
14	Trace wire is exposed at base of influent Christmas tree. Bundle wire and secure to pipe.	Techsas will ensure this is corrected by 1/25/17	LLR	1/20/2017	1/24/2017	
15	Pump have been disengaged from pump motors. Reassemble pumps.	ICS is testing rotation direction of motors on 1/20/17 and will confirm spin is correct, then motors will be reconnected to pumps by techsas by 1/25/17	LLR	1/20/2017	1/23/2017	
16	Connect the discharge pump ARV drain to the floor sump pit and paint pipe.	Techsas will use PVC pipe for connection, similar to existing ARV drain on existing discharge pump. Will be completed by 1/25/17	LLR	1/20/2017	1/25/2017	

Kirtland BFF GWTS Expansion Completion Checklist

Item #	Task	Action	Inspected By	Date Last Inspected	Date Completed	Notes
17	Install sight glass on all tanks. 4 tube sight glasses and 6" clear flange remain.	Tube sight glasses were partially installed by Techsas on 3 tanks on 1/19/17 during shut down (when water is out of tank). installation will be completed by 1/25/17. Backwash water is currently stored in the expansion influent tank, and this water must be discharged to the golf course pond so the tank can be emptied for installation. At this time the golf course pond cannot accept any water. If the tank can be pumped down, the 4th tube sight glass will be installed by 1/25/17. Rupert is installing the 6" clear flange sight glass on 1/20/17.	LLR	1/20/2017	1/24/2017	
18	Remove Rosemount low level and high level sensors. Replace with blind flanges.	Rupert removed from these items from 3 tanks while tanks are drained on 1/20/17, however backwash water is still stored in one tank. This item cannot be completed until backwash water is discharged to golf course.	LLR	1/20/2017	1/23/2017	
19	Unlock butterfly valve on discharge pump skid.	Rupert will remove locks on 1/20/17	LLR	1/20/2017	1/20/2017	
20	Complete grounding of Calgon carbon vessel.	Completed by Wilson	LLR	1/20/2017	1/20/2017	
21	Complete Hydrostatic Tests	Tests have been completed during plant shutdown on 1/20/17	LLR	1/20/2017	1/20/2017	
22	Install flow display outside control room.	Display panel is on-site and being installed by ICS on 1/20/17	LLR	1/20/2017	1/20/2017	
23	Calgon manifold does not have any sample ports. Pressure gauge on right discharge is configured for a sample port, but just needs a sample nipple. Pressure gauges on influent and left discharge are piped to the carbon acceptance canister. Add tee with sample port to these locations.	Techsas will add the sample ports by 1/25/17	LLR	1/20/2017	1/24/2017	
24	Deliver O&M manuals for all installed equipment, carbon vessels, pump skids, flow meters, etc.	Techsas will ensure all are delivered by 2/1/17	LLR	1/20/2017	2/1/2017	
25	Finish connecting carbon vessel pressure switch.	ICS will complete this connection by 1/25/17	LLR	1/20/2017	1/23/2017	
26	Touch up paint on pump skids (clean and re-paint rusted areas, paint exposed steel where pressure indicator posts were removed)	Techsas will obtain proper paint and complete touchups on 2/1/17	LLR	1/20/2017	2/1/2017	
Remain Contract Modification Items						
1	Mod 0 - GWTS Equipment Startup-Acceptance (30%)	Equipment will be accepted upon completion of this checklist (exept this item) and approval by USACE	LLR	1/20/2017	2/6/2017	
2	Mod 0 - Startup and Shakedown	Startup and Shakedown will begin upon completion of GWTS Equipment Startup-Acceptance (completion of this checklist, except this item)	LLR	1/20/2017	2/9/2017	
3	Mod 2 - Line Item #5 - Provide GWTS dedicated hoses for the GAC treatment tank valves in order to perform backwashing and removal of GAC during change-out. Install wall mounting brackets or reels to keep hoses off of the floor of the building.	Techsas completed on 1/20/17	LLR	1/20/2017	1/20/2017	
4	Mod 2 - Line Item #6 - Install final fittings for the two compressed air lines on south wall and the second water line in the same location.	Techsas will complete installation by 1/25/17	LLR	1/20/2017	1/24/2017	

Kirtland BFF GWTS Expansion Completion Checklist

Item #	Task	Action	Inspected By	Date Last Inspected	Date Completed	Notes
5	Mod 2 - Line Item #10 - Convert transducer based water depth measurements to actual elevations and display on the HMI. The transducer depth measurements at each well are relative to the transducer setting, which are set at different depths below ground surface.	EA will provide transducer elevations to ICS by end of 1/20/17, ICS will integrate into programming by 1/24/17	LLR	1/20/2017	2/1/2017	
6	Mod 2 - Line Item #11 - Transmit Injection well KAFB-7 totalizer information to HMI to allow 24-7 access to the meter readout.	on Monday, 1/23/17, Wilson and Techsas will inspect the existing cable and conduit and plan a temporary connection to carry transmission. The temporary connection will require modification of the existing above ground conduit. The connection is expected to be completed by 1/24/17.	LLR	1/20/2017	1/25/2017	
7	Mod 2 - Line Item #12 - Transmit wellhead pressure readings to be displayed on the HMI. Use wellhead readings and transducer depth to determine and display dynamic head on the HMI.	The necessary equipment has been installed and the programming has been integrated into the new PLC software. Proper operation of software will be confirmed upon startup of new PLC software on 1/24/17	LLR	1/20/2017	1/25/2017	
8	Mod 4 - Update VFD programming in PLC for flow conditions in GWTS	ICS is on-site on 1/20/17 installing and testing software. Installation is expected to be complete on 1/24/17 and ready to re-start existing system.	LLR	1/20/2017	1/25/2017	
9	Mod 4 - Replace differential level transducers in existing feed and effluent tanks and reprogram flow regime (per proposal 22JUL16)	Submersible transducers have been installed. Proper operation of software will be confirmed upon startup of new PLC software on 1/24/17	LLR	1/20/2017	1/24/2017	
10	Mod 4 - Replace level switches and reprogram PLC for flow regime in tanks (per proposal 22JUL16)	Float switches have been installed. Proper operation of software will be confirmed upon startup of new PLC software on 1/24/17	LLR	1/20/2017	1/24/2017	
11	Mod 4 - Replace pressure gauge upstream of existing effluent piping tree; install pressure sensors and reprogram PLC to automate valve function (per proposal 22JUL16)	Pressure gauges upstream and downstream of effluent valve have been replaced. Proper operation of software will be confirmed upon startup of new PLC software on 1/24/17	LLR	1/20/2017	1/24/2017	
12	Mod 4 - Replace remote input/output adaptor at injection well KAFB-7 with data logging and reprogram PLC to transmit ar regulator intervals (per proposal 22JUL16)	Remote input/output adaptor has been replaced. Proper operation of software will be confirmed upon startup of new PLC software on 1/24/17	LLR	1/20/2017	1/25/2017	
13	Mod 4 - Program a start-up and shut-off sequence for one botton starts and stops (per proposal 22JUL16)	One button start and stop has been integrated into updated software, and proper operation of software will be confirmed upon startup of new PLC software on 1/24/17	LLR	1/20/2017	1/24/2017	
14	Mod 4 - Update existing programming and tagging to provide adequate code explanation of system components	Updated explanation of sustem components has been integrated into updated software, and proper operation of software will be confirmed upon startup of new PLC software on 1/24/17	LLR	1/20/2017	1/24/2017	Equipment will be physically tagged 2/2/2017

Kirtland BFF GWTS Expansion Completion Checklist

Item #	Task	Action	Inspected By	Date Last Inspected	Date Completed	Notes
USACE Electrical Punchlist Items						
1	Pump skid VFD boxes have several holes that were knocked out but then not used that need weather proof KO (Knock Out) seals.	Holes will be plugged 1/30/17	KM	1/25/2017	1/27/2017	
2	Several of the pump skids have conduit runs that used 1/2 die cast setscrew fittings. These are not intended for damp locations and a typical USACE spec doesn't allow them.	Replace with correct fittings 1/30/17	KM	1/25/2017	1/31/2017	
3	Various boxes on the pump skids have conduits that are connected without using "Myers Hubs" Other conduit runs used them. Damp and Wet locations typically require them on the top entrance for sure.	Replace with correct fittings 1/30/17	KM	1/25/2017	1/31/2017	
4	Several pump skids have conduit (GRS) runs for instrument cable that do not have the proper insulating bushings. Either missing entirely or utilizing the factory thread protector. Atleast one run ends with GRS couplings.	Replace with insulating bushings 1/30/17	KM	1/25/2017	1/31/2017	
5	The NE pump skid has some liquid tite conduit that is the nonmetalic type FNMC. This type is usually not allowed by USACE spec.	Replace with appropriate conduit 1/30/17	KM	1/25/2017	2/2/2017	
6	The NW pump skid has some liquid tite conduit runs secured by tie wraps rather than a proper metal strap.	Secure with appropriate materials 1/30/17	KM	1/25/2017	1/27/2017	

Kirtland BFF GWTS Shakedown Checklist (Revision 1)

Item #	Item Description	Action	Inspected By	Date Last Inspected	Date Completed	Warranty or Out of Scope	Notes
1	Flow zeros should be consistent (either 000 or 0) without scientific notation	Change all flow values to report consistently	KM	2/1/2017	2/22/2017	Warranty	
2	Utilize SMTP to go rather than dis-abq	Change SMTP mail server to the EA paid service	KM	2/1/2017	2/3/2017	Warranty	
3	Well pressure readings not shown for well 228, and pressures for 233 and 234 need to be fixed	Add well 228 pressure reading and correct those displayed for 233 and 234	KM	2/1/2017	2/3/2017	Warranty	
4	PID activation timings need to be configured to minimize pump vibration, oscillation, and deadheading	Adjust PID activation to minimize pump vibration, oscillation, and deadheading	KM	2/6/2017	2/13/2017	Warranty	PID now return to their most recent state to minimize vibration, etc.
5	Only influent pump A is running each time the system is started. Running only 1 pump is expected, as only 1 pump is needed to provide the current flow rate. However influent pump B is not being used. Can the system cycle between using pump A and B each time the system is started?	Confirm how pump A and B cycling operates and revise cycling programming if necessary.	KM	2/1/2017	2/21/2017	Warranty	System was not setup to auto cycle pumps, pump cycling can be performed by the operator at O&M Plan discretion.
6	Unable to connect new PCs to the HMI for remote access	Provide website or program download necessary for connecting to HMI from a PC.	KM	2/6/2017	2/21/2017	Warranty	
7	Modify all icon colors to be readable (black on green rather than green on grey, etc.)	Modify all icon colors to be readable (black on green rather than green on grey, etc.)	KM	2/6/2017	2/21/2017	Warranty	
8	Attempted to run the system in tandem at 315 gpm per train. Effluent pumps still proceeded to ramp up and down as seen at low flow conditions, even after PID fixes on 02-13-17 at a flow rate of 300+ gpm per train.	Correct software to allow for automated operation of both trains in tandem.	KM	2/14/2017	2/22/2017	Warranty	Pump ramping up and down still an issue when running both systems in tandem even at high flowrates following the 02-13-17 PID changes. System now operates properly at low flow and high flow conditions.
9	When turning off one train after running in tandem the system alarm activates but no alarm is displayed on the software and the system shuts down.	Identify and correct this alarm condition as the system should be able to proceed from operating in tandem to single train operation.	KM	2/14/2017	2/22/2017	Warranty	Item not observed
10	Loop check on tank levels failed. The HMI does not display actual tank water levels.	Please correct software to show actual tank water levels.	KM	2/14/2017	2/21/2017	Warranty	
11	Loop check on totalizers failed. The HMI does not display actual totalizer readings.	See note	KM	2/6/2017	2/9/2017	Warranty	Totalizer readings from mag meters cannot be transmitted to the HMI.
12	Loop check determined the effluent upstream pressure appeared to be off from what the HMI reports.	Confirm effluent upstream pressure is displaying correctly on the HMI.	KM	2/14/2017	2/21/2017	Warranty	
13	Intrusion alarms are not active, do not alarm.	Reactivate intrusion alarms in the software	KM	2/14/2017	2/22/2017	Warranty	

Kirtland BFF GWTS Shakedown Checklist (Revision 1)

14	Tank level switches are not consistently placed in their respective tanks. For example, Tank 110 high, high levels at 11.3 ft and tank 210 high, high levels at 10.95 ft. Tank 216 low, low levels at 1.64 ft and tank 116 low, low levels at 1.9 ft.	Physically adjust level floats so that tanks high, high level is 11.3 ft and low, low level is 1.9 ft in all tanks.	KM	2/14/2017	2/21/2017	Warranty	Recommend high,high level of 11 ft and a low, low level of 3 ft. Float switches are set at the appropriate levels, but the switch activation points are different (this is not something alterable by I&C Solutions)
15	Exterior E-stop button had no effect on the system and caused no alarm	Ensure the exterior E-stop button is connected and provides the correct system effect and alarm.	KM	2/14/2017	2/22/2017	Warranty	
16	Interior E-stop button does not provide an alarm and causes a fault requiring reset of well 228. There is also no visualization for an E-stop alarm	Ensure the interior E-stop button provides the correct system effect and alarm.	KM	2/14/2017	2/21/2017	Warranty	
17	Train #2 influent high pressure switch did not alarm, change color on the HMI, and shutdown the system as intended.	Ensure the Train #2 influent high pressure switch is connected and provides the correct system effect and alarm.	KM	2/14/2017	2/21/2017	Warranty	
18	Train #2 GAC high pressure switch did not alarm, change color on the HMI, and shutdown the system as intended.	Ensure the Train #2 GAC high pressure switch provides the correct system effect and alarm.	KM	2/14/2017	2/21/2017	Warranty	
19	Train #2 effluent high pressure switch did not shutdown the system as intended.	Ensure the Train #2 effluent high pressure switch provides the correct system effect.	KM	2/14/2017	2/21/2017	Warranty	
20	Train #1 influent high pressure switch did not shutdown the system as intended.	Ensure the Train #1 influent high pressure switch provides the correct system effect.	KM	2/14/2017	2/21/2017	Warranty	
21	Train #1 GAC high pressure switch alarmed for both GAC pressure switches and did not fully shut the system down.	Ensure the Train #1 GAC high pressure switch provides the correct system effect and alarm.	KM	2/14/2017	2/21/2017	Warranty	
22	Train #1 effluent high pressure switch did not shutdown the system as intended.	Ensure the Train #1 effluent high pressure switch provides the correct system effect.	KM	2/14/2017	2/21/2017	Warranty	
23	GWTS internal sump leak sensor did not alarm and shutdown the system as intended. No visualization was depicted on the HMI.	Ensure the GWTS internal sump leak sensor provides the correct system effect and alarm.	KM	2/14/2017	2/21/2017	Warranty	
24	GWTS external sump leak sensor did not alarm and shutdown the system as intended. No visualization was depicted on the HMI.	Ensure the GWTS external sump leak sensor provides the correct system effect and alarm.	KM	2/14/2017	2/21/2017	Warranty	
25	The Lousiana vault for 233/234 (LSH-8001) leak sensor did not alarm and shutdown the system as intended. No visualization was depicted on the HMI. No visualization was depicted on the HMI.	Ensure the Lousiana vault for 233/234 (LSH-8001) leak sensor provides the correct system effect and alarm.	KM	2/14/2017	2/21/2017	Warranty	
26	The Lousiana vault for 228 leak sensor reported as a 228 leak alarm and not the specific vault and did not shutdown the system as intended. No visualization was depicted on the HMI.	Ensure the Lousiana vault for 228 leak sensor provides the correct system effect and alarm.	KM	2/14/2017	2/21/2017	Warranty	

Kirtland BFF GWTS Shakedown Checklist (Revision 1)

27	The Lousiana vault for 228 conveyance line sensor reported as a 228 leak alarm and not the specific conveyance line and did not shutdown the system as intended. No visualization was depicted on the HMI.	Ensure the Lousiana vault for 228 conveyance line sensor provides the correct system effect and alarm.	KM	2/14/2017	2/21/2017	Warranty	
28	The Well Control House leak sensor reported as a 234 leak alarm and not the specific location. No visualization was depicted on the HMI.	Ensure the Well Control House leak sensor provides the correct alarm.	KM	2/14/2017	2/22/2017	Warranty	Unsure if this sensor will disable well 233
29	The Eastern Avenue leak sensor reported as a 233 leak alarm and not the specific vault and did not shutdown the system as intended. No visualization was depicted on the HMI.	Ensure the Eastern Avenue leak sensor provides the correct system effect and alarm.	KM	2/14/2017	2/22/2017	Warranty	This sensor did not disable well 234
30	At all wells there is not a different alarm for the conveyance line leak sensors and the vault leak sensors	Ensure the conveyance line and vault leak sensors report alarms specific to the sensors.	KM	2/14/2017	2/22/2017	Warranty	
31	Well 228's vault and conveyance line leak sensors did not shutdown the system as intended.	Ensure well 228's leak sensors provide the correct system effect.	KM	2/14/2017	2/21/2017	Warranty	
32	System responses to pump failures could not be verified.	Simulate pump failures to allow for observation of system effects.	KM	2/14/2017	2/21/2017	Warranty	
33	System responses to well control house conveyance line leak sensor could not be verified.	Simulate conveyance line leak sensor detection to allow for observation of system effects.	KM	2/14/2017	2/22/2017	Warranty	
34	System responses to tank high, high and low,low levels could not be verified.	Simulate level switch detections to allow for observation of system effects.	KM	2/14/2017	2/22/2017	Warranty	
35	Pump 212A appears to be leaking oil.	The pump cowling will be cleaned and the pump will be observed for additional oil leakage. If leakage continues then the pump will need to be replaced. This is a Flightway warranty item.	KM	2/14/2017	2/22/2017	Warranty	Leak appears to be slowing,
36	Effluent bag filter valve does not hold pressure.	The valve will need to be pulled and inspected for debris and/or seal damage. Once inspected the item will either need cleaned or replaced. This is a Flightway warranty item.	KM	2/14/2017	3/1/2017	Warranty	Replaced valve
37	Well control house E-stop button does not provide an alarm but did shutdown well 234. There is also no visualization for an E-stop alarm	Ensure the well control house E-stop button provides the correct alarm.	KM	2/16/2017	3/6/2017	Warranty	
38	Pond level is not consistent with the stadia rod at the pond.	Ensure that program scaling is not causing the issue, and if an offset cannot be provided then return the transducer readout on the HMI to its true value (EA staff will calibrate between the stadia rod and transducer reading manually)	KM	2/23/2017	3/6/2017	Warranty	This item is only a warranty item if it pertains to programming, transducer malfunction is out of scope
39	Trend graph for the extraction well water levels is not displaying properly	Water levels for all three extraction wells are not being displayed properly on the HMI trend screen.	KM	3/1/2017	3/6/2017	Warranty	

Kirtland BFF GWTS Shakedown Checklist (Revision 1)

40	The GWTS requires manual flow rate input and will not maintain constant levels in the influent and effluent tanks.	Program the PLC to ensure groundwater capture by operating the treatment system at a flow rate necessary to match the sum of flows from the extraction wells. Maintain water level in the feed tank through adjustment of the influent pump VFD (within minimum and maximum flow rates). Program the PLC to maintain water level in the discharge tank through adjustment of the discharge pump VFD (within minimum and maximum flow rates). Remove operator control of influent and effluent skid flow rate (only extraction well flow rate may be manipulated, influent and effluent pumps should be independent of extraction well flow rates), replace with operator control of tank water level operating point. Provide input to select percent flow to treatment train 1 and percent flow to treatment train 2, with sum total 100%.	LR	2/3/2017	To be completed at later date	Out of Scope	
41	Display an additional decimal point on tank water levels, flowrates, water elevations (wells), and golf course main pond water elevation** (** 2x decimal points).	Add an additional decimal point to the pond level if possible	KM	2/1/2017	2/22/2017	Out of Scope	Would it be possible to have an additional decimal on the golf course main pond water elevation?
42	GCMP water level is not being logged.	Add GCMP logging (if needed combine up and down pressures or well 7 and GCMP)	KM	2/1/2017	To be completed at later date	Out of Scope	Only able to log 16 items using the C-more software
43	Exterior building light alarm override	Add a manual override control for the exterior building alarm light	KM	2/1/2017	2/22/2017	Out of Scope	
44	Need to know alarm set points (setup screen? Only 4 listed on train control screen) including those for each well drawdown, skid pressure, etc.	Add alarm set points (display only, do not allow modifying set points) for individual extraction well drawdown, injection well ponding, and golf course pond high level	KM	2/1/2017	3/1/2017	Out of Scope	Any additional nonphysical set-point alarms not apparent should be provided (will be provided as part of the code hand over)
45	Data from HMI is recorded every 2 minutes with duplicates and occasionally data is not recorded	Increase the HMI record collecting interval to 1 minute intervals	KM	2/6/2017	3/6/2017	Out of Scope	
46	Would like flow rates for extraction wells displayed on overview	Add extraction well flow rates to the overview screen	KM	2/6/2017	2/22/2017	Out of Scope	

Kirtland BFF GWTS Shakedown Checklist (Revision 1)

47	Trend graph axis scales and labeling issues: -Well Y axis is large, from 0 to 6000 FT -X axis is 0 to 60, but is not labeled. Is this minutes or hours? -Well 7 flow rate axis is scaled to show 0-2000 GPM -Golf Course time axis will need to be 3 days .	Adjust x and y axes to appropriate scales: Extraction Well Discharge Flow: x axis = 120 minutes, y axis = no change Extraction Well Drawdown Level: x axis = 120 minutes, y axis = 4800-5000 ft AMSL GW Storage Tank Level TK-110 and 210 and TW Storage Tank Level TK-116 and 216: x axis = 120 minutes, y axis = no change GW Train 1 and 2 Feed and Discharge Flow: x axis = 120 minutes, y axis = no change TW Upstream Pressure: x axis = 120 minutes, y axis = 75 psi TW Downstream Pressure: x axis = 120 minutes, y axis = 30 psi TW Total Discharge Flow: x axis = 120 minutes, y axis = no change Well 7 Inlet Flow: x axis = 120 minutes, y axis = 1000 gpm Well 7 Inlet Pressure: x axis = 120 minutes, y axis = 15 psi Well 7 Level: x axis = 120 minutes, y axis = 4800-5000 ft AMSL, in addition this figure contains a red line with no title in the legend while other single line figures contain a black line without a legend Golf Course Pond Level: x axis = 72 hours, y axis = 4 ft	KM	2/6/2017	3/1/2017	Out of Scope	Scaling was corrected to actual values and y-axes were adjusted, but x-axes were not adjusted. (x-axes changes identified as not needed)

ADDITIONAL SAFETY DOCUMENTATION

SITE: _____

EA Project No. 62599DM01

I have read the Accident Prevention Plan and have been briefed on anticipated site hazards, required accident prevention, and emergency response for work to be performed at this site. I agree to conform to all the requirements of this Plan.

Name	Signature	Affiliation	Date
Elias Gallegos Jr		Rupert P&H	10-10-2016
Michael Clifford Jr.		Rupert P&H	10/10/2016
Mike Rupert		Rupert P&H	10/10/16
Chris A. Augster		Rupert P&H	10/11/16
Andres Porras		Rupert P&H	10-12-16
Edgar Sandoval		Trade Source	10.24.16

ACCIDENT PREVENTION PLAN REVIEW RECORD

SITE: KAFB-5202 Randolph Road SE Abq, nm

EA Project No. 62599DM01

I have read the Accident Prevention Plan and have been briefed on anticipated site hazards, required accident prevention, and emergency response for work to be performed at this site. I agree to conform to all the requirements of this Plan.

Name	Signature	Affiliation	Date
Dawn Gurule	Dawn Gurule	MRC	10-12-16
Bob Clark	Bob Clark	MRC	10-20-16
Mike McLeran	Mike McLeran	Coyote	10-24-16
~~Gerald Holt~~		Coyote	10-24-16
Eileen Sandoval		TRADE SOURCE	10-24-16

ACCIDENT PREVENTION PLAN REVIEW RECORD

SITE: _____

EA Project No. 62599DM01

I have read the Accident Prevention Plan and have been briefed on anticipated site hazards, required accident prevention, and emergency response for work to be performed at this site. I agree to conform to all the requirements of this Plan.

Name	Signature	Affiliation	Date
Britt Crooks	Britt Crooks	Wilson Electric	11-8-16
Stephen Spress		Wilson	11/8/16
Roberto Gurrola		Wilson Electric	11/8/16
Travis Thomson		Wilson Elect	11/9/16
Victor Maldonado		Wilson Electric	11-9-16

Rupert Plumbing & Heating Co., Inc.

FORKLIFT OPERATOR CHECKLIST

Items that need to be check daily or before you use the forklift. Check off the items that are ok and list items that need to be repaired at the bottom.

Date:	Location: ~~SNL Bldg~~ GWTS	Operator: Michael Clifcorn
10-17-2016	Vehicle I.D. GTH 5519	Vehicle SS No. 15185

Checklist Items	1	2	3	Additional Comments
Engine Oil	X			
Transmission Oil	X			
Radiator Levels	X			
Fuel Level	X			
Brake - Foot	X			
Brake - Parking	X			
Gauges	X			
Hydraulic Controls	X			
Hydraulic Hoses - Leaks	X			
Hydraulic Oil	X			
Tires	X			
Battery	X			
Horn	X			
Lights	X			
All Controls	X			
Tilt/Mast	X			
Transmission	X			
Forks	X			
Steering	X			
Travel Conditions	X			
Seat Belt	X			
Overhead Obstructions				
Other				
Other				

1 = OK
2 = Minor Repairs Needed
3 = Fix Immediately – NOT USEABLE

Notes: _____

Rupert Plumbing & Heating Co., Inc.

FORKLIFT OPERATOR CHECKLIST

Items that need to be check daily or before you use the forklift. Check off the items that are ok and list items that need to be repaired at the bottom.

Date: 10-13-2016	Location: [redacted]	Operator: Michael Clifcorn
	Vehicle I.D. GTH 5519	Vehicle SS No. 15185

Checklist Items	1	2	3	Additional Comments
Engine Oil	✓			
Transmission Oil	✓			
Radiator Levels	✓			
Fuel Level	✓			
Brake - Foot	✓			
Brake - Parking	✓			
Gauges	✓			
Hydraulic Controls	✓			
Hydraulic Hoses - Leaks	✓			
Hydraulic Oil	✓			
Tires	✓			
Battery	✓			
Horn	✓			
Lights	✓			
All Controls	✓			
Tilt/Mast	✓			
Transmission	✓			
Forks	✓			
Steering	✓			
Travel Conditions	✓			
Seat Belt	✓			
Overhead Obstructions	✓			
Other				
Other				

1 = OK
2 = Minor Repairs Needed
3 = Fix Immediately – NOT USEABLE

Notes: _____

Rupert Plumbing & Heating Co., Inc.

FORKLIFT OPERATOR CHECKLIST

Items that need to be check daily or before you use the forklift. Check off the items that are ok and list items that need to be repaired at the bottom.

Date: 10-19-16	Location: SNL Bldg 894 GWTS	Operator: Andres Porras Jr.
	Vehicle I.D. GTH 5519	Vehicle SS No. 15185

Checklist Items	1	2	3	Additional Comments
Engine Oil	X			
Transmission Oil	X			
Radiator Levels	X			
Fuel Level	X			
Brake - Foot	X			
Brake - Parking	X			
Gauges	X			
Hydraulic Controls	X			
Hydraulic Hoses - Leaks	X			
Hydraulic Oil	X			
Tires	X			
Battery	X			
Horn	X			
Lights	X			
All Controls	X			
Tilt/Mast	X			
Transmission	X			
Forks	X			
Steering	X			
Travel Conditions	X			
Seat Belt	X			
Overhead Obstructions	X			
Other				
Other				

1 = OK
2 = Minor Repairs Needed
3 = Fix Immediately – NOT USEABLE

Notes: _____

Rupert Plumbing & Heating Co., Inc.

FORKLIFT OPERATOR CHECKLIST

Items that need to be check daily or before you use the forklift. Check off the items that are ok and list items that need to be repaired at the bottom.

Date: 10/24/2016	Location: ~~SNL Bldg 894~~ GWTS	Operator: Mike Clifford
	Vehicle I.D. GTH 5519	Vehicle SS No. 15185

Checklist Items	1	2	3	Additional Comments
Engine Oil	✓			
Transmission Oil	✓			
Radiator Levels	✓			
Fuel Level	✓			
Brake - Foot	✓			
Brake - Parking	✓			
Gauges	✓			
Hydraulic Controls	✓			
Hydraulic Hoses - Leaks	✓			
Hydraulic Oil	✓			
Tires	✓			
Battery	✓			
Horn	✓			
Lights	✓			
All Controls	✓			
Tilt/Mast	✓			
Transmission	✓			
Forks	✓			
Steering	✓			
Travel Conditions	✓			
Seat Belt	✓			
Overhead Obstructions	✓			
Other				
Other				

1 = OK
2 = Minor Repairs Needed
3 = Fix Immediately – NOT USEABLE

Notes: _____

Rupert Plumbing & Heating Co., Inc.

FORKLIFT OPERATOR CHECKLIST

Items that need to be check daily or before you use the forklift. Check off the items that are ok and list items that need to be repaired at the bottom.

Date: 10-25-16	Location: ~~SNL Bldg 894~~ GWTS	Operator: Andres Porras Jr
	Vehicle I.D. GTH 5519	Vehicle SS No. 15185

Checklist Items	1	2	3	Additional Comments
Engine Oil	X			
Transmission Oil	X			
Radiator Levels	X			
Fuel Level	X			
Brake - Foot	X			
Brake - Parking	X			
Gauges	X			
Hydraulic Controls	X			
Hydraulic Hoses - Leaks	X			
Hydraulic Oil	X			
Tires	X			
Battery	X			
Horn	X			
Lights	X			
All Controls	X			
Tilt/Mast	X			
Transmission	X			
Forks	X			
Steering	X			
Travel Conditions	X			
Seat Belt	X			
Overhead Obstructions	X			
Other				
Other				

1 = OK
2 = Minor Repairs Needed
3 = Fix Immediately – NOT USEABLE

Notes: _____

Rupert Plumbing & Heating Co., Inc.

FORKLIFT OPERATOR CHECKLIST

Items that need to be check daily or before you use the forklift. Check off the items that are ok and list items that need to be repaired at the bottom.

Date: 10-26-10	Location: ~~SNL Bldg~~ 894 GWTS	Operator: Chris Augster
	Vehicle I.D. GTH 5519	Vehicle SS No. 15185

Checklist Items	1	2	3	Additional Comments
Engine Oil	✓			
Transmission Oil	✓			
Radiator Levels	✓			
Fuel Level	✓			
Brake - Foot	✓			
Brake - Parking	✓			
Gauges	✓			
Hydraulic Controls	✓			
Hydraulic Hoses - Leaks	✓			
Hydraulic Oil	✓			
Tires	✓			
Battery	✓			
Horn	✓			
Lights				
All Controls	✓			
Tilt/Mast	✓			
Transmission	✓			
Forks	✓			
Steering	✓			
Travel Conditions	✓			
Seat Belt	✓			
Overhead Obstructions	✓			
Other				
Other				

1 = OK
2 = Minor Repairs Needed
3 = Fix Immediately – NOT USEABLE

Notes: _____

Rupert Plumbing & Heating Co., Inc.

FORKLIFT OPERATOR CHECKLIST

Items that need to be check daily or before you use the forklift. Check off the items that are ok and list items that need to be repaired at the bottom.

Date:	Location: SNL Bldg 894 6WTS	Operator: Chris P. Augster
10-27-16	Vehicle I.D. GTH 5519	Vehicle SS No. 15185

Checklist Items	1	2	3	Additional Comments
Engine Oil	✓			
Transmission Oil	✓			
Radiator Levels	✓			
Fuel Level	✓			
Brake - Foot	✓			
Brake - Parking	✓			
Gauges	✓			
Hydraulic Controls	✓			
Hydraulic Hoses - Leaks	✓			
Hydraulic Oil	✓			
Tires	✓			
Battery	✓			
Horn	✓			
Lights	✓			
All Controls	✓			
Tilt/Mast	✓			
Transmission	✓			
Forks	✓			
Steering	✓			
Travel Conditions	✓			
Seat Belt	✓			
Overhead Obstructions	✓			
Other	✓			
Other	✓			

1 = OK
2 = Minor Repairs Needed
3 = Fix Immediately – NOT USEABLE

Notes: _____

Rupert Plumbing & Heating Co., Inc.

FORKLIFT OPERATOR CHECKLIST

Items that need to be check daily or before you use the forklift. Check off the items that are ok and list items that need to be repaired at the bottom.

Date:	Location: ~~SNL Bldg 894~~	Operator:
10-28-2016	GW75	Chris A. Hughes
	Vehicle I.D. GTH 5519	Vehicle SS No. 15185

Checklist Items	1	2	3	Additional Comments
Engine Oil	✓			
Transmission Oil	✓			
Radiator Levels	✓			
Fuel Level	✓			
Brake - Foot	✓			
Brake - Parking	✓			
Gauges	✓			
Hydraulic Controls	✓			
Hydraulic Hoses - Leaks	✓			One leak - under RADIATOR
Hydraulic Oil	✓			
Tires	✓			
Battery	✓			
Horn	✓			
Lights	✓			
All Controls	✓			
Tilt/Mast	✓			
Transmission	✓			
Forks	✓			
Steering	✓			
Travel Conditions	✓			
Seat Belt	✓			
Overhead Obstructions	✓			
Other				
Other				

1 = OK
2 = Minor Repairs Needed
3 = Fix Immediately – NOT USEABLE

Notes: _____

Rupert Plumbing & Heating Co., Inc.

FORKLIFT OPERATOR CHECKLIST

Items that need to be check daily or before you use the forklift. Check off the items that are ok and list items that need to be repaired at the bottom.

Date: 10-31-16	~~Location: SNL Bldg 894~~ GWTS	Operator: Andrea Porras L
	Vehicle I.D. GTH 5519	Vehicle SS No. 15185

Checklist Items	1	2	3	Additional Comments
Engine Oil	✓			
Transmission Oil	✓			
Radiator Levels	✓			
Fuel Level	✓			
Brake - Foot	✓			
Brake - Parking	✓			
Gauges	✓			
Hydraulic Controls	✓			
Hydraulic Hoses - Leaks	✓			
Hydraulic Oil	✓			
Tires	✓			
Battery	✓			
Horn	✓			
Lights	✓			
All Controls	✓			
Tilt/Mast	✓			
Transmission	✓			
Forks	✓			
Steering	✓			
Travel Conditions	✓			
Seat Belt	✓			
Overhead Obstructions	✓			
Other	✓			
Other	✓			

1 = OK
2 = Minor Repairs Needed
3 = Fix Immediately – NOT USEABLE

Notes: _____

Rupert Plumbing & Heating Co., Inc.

FORKLIFT OPERATOR CHECKLIST

Items that need to be check daily or before you use the forklift. Check off the items that are ok and list items that need to be repaired at the bottom.

Date: 11-1-16	Location: SNL Bldg 894 GWTS	Operator: Andrus Porras Z
	Vehicle I.D. GTH 5519	Vehicle SS No. 15185

Checklist Items	1	2	3	Additional Comments
Engine Oil	X			
Transmission Oil	X			
Radiator Levels	X			
Fuel Level	X			
Brake - Foot	X			
Brake - Parking	X			
Gauges	X			
Hydraulic Controls	X			
Hydraulic Hoses - Leaks	X			
Hydraulic Oil	X			
Tires	X			
Battery	X			
Horn	X			
Lights	X			
All Controls	X			
Tilt/Mast	X			
Transmission	X			
Forks	X			
Steering	X			
Travel Conditions	X			
Seat Belt	X			
Overhead Obstructions	X			
Other				
Other				

1 = OK
2 = Minor Repairs Needed
3 = Fix Immediately – NOT USEABLE

Notes: _____

Rupert Plumbing & Heating Co., Inc.

FORKLIFT OPERATOR CHECKLIST

Items that need to be check daily or before you use the forklift. Check off the items that are ok and list items that need to be repaired at the bottom.

Date: 11-2-16	Location: SNL Bldg 894 GWTS	Operator: Andrea Powers Z
	Vehicle I.D. GTH 5519	Vehicle SS No. 15185

Checklist Items	1	2	3	Additional Comments
Engine Oil	X			
Transmission Oil	X			
Radiator Levels	X			
Fuel Level	X			
Brake - Foot	X			
Brake - Parking	X			
Gauges	X			
Hydraulic Controls	X			
Hydraulic Hoses - Leaks	X			
Hydraulic Oil	X			
Tires	X			
Battery	X			
Horn	X			
Lights	X			
All Controls	X			
Tilt/Mast	X			
Transmission	X			
Forks	X			
Steering	X			
Travel Conditions	X			
Seat Belt	X			
Overhead Obstructions	X			
Other				
Other				

1 = OK
2 = Minor Repairs Needed
3 = Fix Immediately – NOT USEABLE

Notes: _____

Rupert Plumbing & Heating Co., Inc.

FORKLIFT OPERATOR CHECKLIST

Items that need to be check daily or before you use the forklift. Check off the items that are ok and list items that need to be repaired at the bottom.

Date: 11-3-16	Location: ~~SNL Bldg 894~~ GWTS	Operator: Chris Hughes
	Vehicle I.D. GTH 5519	Vehicle SS No. 15185

Checklist Items	1	2	3	Additional Comments
Engine Oil	✓			
Transmission Oil	✓			
Radiator Levels	✓			
Fuel Level	✓			
Brake - Foot	✓			
Brake - Parking	✓			
Gauges	✓			
Hydraulic Controls	✓			
Hydraulic Hoses - Leaks	✓			One small leak under Radiator
Hydraulic Oil	✓			
Tires	✓			
Battery	✓			
Horn	✓			
Lights	✓			
All Controls	✓			
Tilt/Mast	✓			
Transmission	✓			
Forks	✓			
Steering	✓			
Travel Conditions	✓			
Seat Belt	✓			
Overhead Obstructions	✓			
Other				
Other				

1 = OK
2 = Minor Repairs Needed
3 = Fix Immediately – NOT USEABLE

Notes: _____

Rupert Plumbing & Heating Co., Inc.

FORKLIFT OPERATOR CHECKLIST

Items that need to be check daily or before you use the forklift. Check off the items that are ok and list items that need to be repaired at the bottom.

Date: 11-7-16	Location: SNL Bldg 894 GWTS	Operator: Rudy, Wally, Mike, Chris
	Vehicle I.D. GTH 5519	Vehicle SS No. 15185

Checklist Items	1	2	3	Additional Comments
Engine Oil	✓			
Transmission Oil	✓			
Radiator Levels	✓			
Fuel Level	✓			
Brake - Foot	✓			
Brake - Parking	✓			
Gauges	✓			
Hydraulic Controls	✓			
Hydraulic Hoses - Leaks		✓		Leak under radiator Area
Hydraulic Oil	✓			
Tires	✓			
Battery	✓			
Horn	✓			
Lights	✓			
All Controls	✓			
Tilt/Mast	✓			
Transmission	✓			
Forks	✓			
Steering	✓			
Travel Conditions	✓			
Seat Belt	✓			
Overhead Obstructions	✓			
Other				
Other				

1 = OK
2 = Minor Repairs Needed
3 = Fix Immediately – NOT USEABLE

Notes: _____

Rupert Plumbing & Heating Co., Inc.

FORKLIFT OPERATOR CHECKLIST

Items that need to be check daily or before you use the forklift. Check off the items that are ok and list items that need to be repaired at the bottom.

Date: 11-8-16	Location: SNL Bldg 894	Operator: Mike Wally, Andy Chris
	Vehicle I.D. GTH 5519	Vehicle SS No. 15185

Checklist Items	1	2	3	Additional Comments
Engine Oil	✓			
Transmission Oil	✓			
Radiator Levels	✓			
Fuel Level	✓			
Brake - Foot	✓			
Brake - Parking	✓			
Gauges	✓			
Hydraulic Controls	✓			
Hydraulic Hoses - Leaks		X		minor
Hydraulic Oil	✓			
Tires	✓			
Battery	✓			
Horn	✓			
Lights	✓			
All Controls	✓			
Tilt/Mast	✓			
Transmission	✓			
Forks	✓			
Steering	✓			
Travel Conditions	✓			
Seat Belt	✓			
Overhead Obstructions				
Other				
Other				

1 = OK
2 = Minor Repairs Needed
3 = Fix Immediately – NOT USEABLE

Notes: _____

Rupert Plumbing & Heating Co., Inc.

FORKLIFT OPERATOR CHECKLIST

Items that need to be check daily or before you use the forklift. Check off the items that are ok and list items that need to be repaired at the bottom.

Date: 11-9-16	Location: SNL Bldg 894 GWTS	Operator: Audley Porras 2
	Vehicle I.D. GTH 5519	Vehicle SS No. 15185

Checklist Items	1	2	3	Additional Comments
Engine Oil	X			
Transmission Oil	X			
Radiator Levels	X			
Fuel Level	X			
Brake - Foot	X			
Brake - Parking	X			
Gauges	X			
Hydraulic Controls	X			
Hydraulic Hoses - Leaks	X			
Hydraulic Oil	X			
Tires	X			
Battery	X			
Horn	X			
Lights	X			
All Controls	X			
Tilt/Mast	X			
Transmission	X			
Forks	X			
Steering	X			
Travel Conditions	X			
Seat Belt	X			
Overhead Obstructions	X			
Other				
Other				

1 = OK
2 = Minor Repairs Needed
3 = Fix Immediately – NOT USEABLE

Notes: _____

Rupert Plumbing & Heating Co., Inc.

FORKLIFT OPERATOR CHECKLIST

Items that need to be check daily or before you use the forklift. Check off the items that are ok and list items that need to be repaired at the bottom.

Date: 12/14/16	Location: SNL Bldg 894 GWT 8	Operator: Trevis Thomson
	Vehicle I.D. GTH 5519	Vehicle SS No. 15185

Checklist Items	1	2	3	Additional Comments
Engine Oil	X			
Transmission Oil	X			
Radiator Levels	X			
Fuel Level	X			
Brake - Foot	X			
Brake - Parking	X			
Gauges	X			
Hydraulic Controls	X			
Hydraulic Hoses - Leaks	X			
Hydraulic Oil	X			
Tires	X			
Battery	X			
Horn	X			
Lights	X			
All Controls	X			
Tilt/Mast	X			
Transmission	X			
Forks	X			
Steering	X			
Travel Conditions	X			
Seat Belt	X			
Overhead Obstructions	X			
Other				
Other				

1 = OK
2 = Minor Repairs Needed
3 = Fix Immediately – NOT USEABLE

Notes: _____

MICK RICH CONTRACTORS

SCISSOR LIFT INSPECTION CHECKLIST

Inspected by: MIKE McLEAN	Date: 10-26-16		
Pre-Operation Procedures	Pass	Fail	N/A
Check hydraulic hoses and fittings	✓		
Check battery wiring and fluid level	✓		
Check tires for proper inflation, gouges, and wear	✓		
Main Frame and Scissors			
Check structure and scissors for corrosion, cracks, bends	✓		
Check pivot pins and fasteners	✓		
Control System			
Check for damage to switches, indicators, and guards	✓		
Check terminals and plugs	✓		
Check cords	✓		
Manuals and Safety Decals			
ANSI Manual and Operator's Manual are in storage box	✓		
Capacity, safety and instruction decals are legible	✓		
Platform			
Rear closure and railing secure in pockets	✓		
All fasteners secure and railing in good condition	✓		
Function Tests			
Base and upper control box work properly	✓		
Steering, driving and brakees operational	✓		
Fast speed cut out when platform is elevated			✓
Platform raises to full extension	✓		
Emergency down and stop			✓
Pothole system operational			✓
Workplace Inspection - Survey work area for potential hazardous operating conditions prior to lift usage. Ensure hazards identified are addressed.	Present	Not Present	N/A
Floor/ground conditions: Drop-offs, holes, uneven surfaces, slope floors, unstable ground, etc.		✓	
Housekeeping: Debris, floor obstructions, cords, construction materials, supplies, etc.		✓	
Hazardous Energy: Electrical cables or panels, chemical/gas/drain lines, utilities, etc.	✓		
Overhead obstructions: Tight working conditions, pipe racks, beams, etc.	✓		
NOTE: If any item above requires maintenance or repair, notify your supervisor. At the end of your shift submit completed checklist to your supervisor.			
Comments:			

MICK RICH CONTRACTORS

SCISSOR LIFT INSPECTION CHECKLIST

Inspected by: JAVIER NAJERA	Date: 27 10 16		
Pre-Operation Procedures	Pass	Fail	N/A
Check hydraulic hoses and fittings	✓		
Check battery wiring and fluid level	✓		
Check tires for proper inflation, gouges, and wear	✓		
Main Frame and Scissors	✓		
Check structure and scissors for corrosion, cracks, bends	✓		
Check pivot pins and fasteners	✓		
Control System	✓		
Check for damage to switches, indicators, and guards	✓		
Check terminals and plugs			
Check cords	✓		
Manuals and Safety Decals	✓		
ANSI Manual and Operator's Manual are in storage box	✓		
Capacity, safety and instruction decals are legible	✓		
Platform			
Rear closure and railing secure in pockets	✓		
All fasteners secure and railing in good condition	✓		
Function Tests	✓		
Base and upper control box work properly	✓		
Steering, driving and brakees operational	✓		
Fast speed cut out when platform is elevated	✓		
Platform raises to full extension	✓		
Emergency down and stop	✓	✓	✓
Pothole system operational	✓	✓	✓
Workplace Inspection - Survey work area for potential hazardous operating conditions prior to lift usage. Ensure hazards identified are addressed.	Present	Not Present	N/A
Floor/ground conditions: Drop-offs, holes, uneven surfaces, slope floors, unstable ground, etc.		✓	
Housekeeping: Debris, floor obstructions, cords, construction materials, supplies, etc.		✓	
Hazardous Energy: Electrical cables or panels, chemical/gas/drain lines, utilities, etc.		✓	
Overhead obstructions: Tight working conditions, pipe racks, beams, etc.	✓		

NOTE: If any item above requires maintenance or repair, notify your supervisor. At the end of your shift submit completed checklist to your supervisor.

Comments:

MICK RICH CONTRACTORS

SCISSOR LIFT INSPECTION CHECKLIST

Inspected by: JAVIER Nasera	Date: 28 10 16		
Pre-Operation Procedures	Pass	Fail	N/A
Check hydraulic hoses and fittings	✓		
Check battery wiring and fluid level	✓		
Check tires for proper inflation, gouges, and wear	✓		
Main Frame and Scissors	✓		
Check structure and scissors for corrosion, cracks, bends	✓		
Check pivot pins and fasteners	✓		
Control System	✓		
Check for damage to switches, indicators, and guards	✓		
Check terminals and plugs	✓		
Check cords	✓		
Manuals and Safety Decals	✓		
ANSI Manual and Operator's Manual are in storage box	✓		
Capacity, safety and instruction decals are legible	✓		
Platform	✓		
Rear closure and railing secure in pockets	✓		
All fasteners secure and railing in good condition	✓		
Function Tests	✓		
Base and upper control box work properly	✓		
Steering, driving and brakees operational	✓		
Fast speed cut out when platform is elevated	✓		
Platform raises to full extension	✓		
Emergency down and stop	✓		
Pothole system operational	✓		
Workplace Inspection - Survey work area for potential hazardous operating conditions prior to lift usage. Ensure hazards identified are addressed.	Present	Not Present	N/A
Floor/ground conditions: Drop-offs, holes, uneven surfaces, slope floors, unstable ground, etc.		✓	
Housekeeping: Debris, floor obstructions, cords, construction materials, supplies, etc.		✓	
Hazardous Energy: Electrical cables or panels, chemical/gas/drain lines, utilities, etc.		✓	
Overhead obstructions: Tight working conditions, pipe racks, beams, etc.	✓		

NOTE: If any item above requires maintenance or repair, notify your supervisor. At the end of your shift submit completed checklist to your supervisor.

Comments:

MICK RICH CONTRACTORS

~~RUPERT PLUMBING AND HEATING~~

SCISSOR LIFT INSPECTION CHECKLIST

Inspected by: MIKE MCGRATH	Date:		
Pre-Operation Procedures	Pass	Fail	N/A
Check hydraulic hoses and fittings	✓		
Check battery wiring and fluid level	✓		
Check tires for proper inflation, gouges, and wear			✓
Main Frame and Scissors	✓		
Check structure and scissors for corrosion, cracks, bends	✓		
Check pivot pins and fasteners	✓		
Control System	✓		
Check for damage to switches, indicators, and guards	✓		
Check terminals and plugs	✓		
Check cords	✓		
Manuals and Safety Decals	✓		
ANSI Manual and Operator's Manual are in storage box	✓		
Capacity, safety and instruction decals are legible	✓		
Platform			
Rear closure and railing secure in pockets	✓		
All fasteners secure and railing in good condition	✓		
Function Tests			
Base and upper control box work properly	✓		
Steering, driving and brakees operational	✓		
Fast speed cut out when platform is elevated	✓		
Platform raises to full extension	✓		
Emergency down and stop	✓		
Pothole system operational			

Workplace Inspection - Survey work area for potential hazardous operating conditions prior to lift usage. Ensure hazards identified are addressed.	Present	Not Present	N/A
Floor/ground conditions: Drop-offs, holes, uneven surfaces, slope floors, unstable ground, etc.		✓	
Housekeeping: Debris, floor obstructions, cords, construction materials, supplies, etc.		✓	
Hazardous Energy: Electrical cables or panels, chemical/gas/drain lines, utilities, etc.		✓	
Overhead obstructions: Tight working conditions, pipe racks, beams, etc.	✓		

NOTE: If any item above requires maintenance or repair, notify your supervisor. At the end of your shift submit completed checklist to your supervisor.

Comments:

MICK RICH CONTRACTORS

SCISSOR LIFT INSPECTION CHECKLIST

Inspected by: MIKE M°ELRATH	Date:		
Pre-Operation Procedures	Pass	Fail	N/A
Check hydraulic hoses and fittings	✓		
Check battery wiring and fluid level	✓		
Check tires for proper inflation, gouges, and wear	✓		
Main Frame and Scissors			
Check structure and scissors for corrosion, cracks, bends	✓		
Check pivot pins and fasteners	✓		
Control System			
Check for damage to switches, indicators, and guards	✓		
Check terminals and plugs	✓		
Check cords	✓		
Manuals and Safety Decals			
ANSI Manual and Operator's Manual are in storage box	✓		
Capacity, safety and instruction decals are legible	✓		
Platform			
Rear closure and railing secure in pockets	✓		
All fasteners secure and railing in good condition	✓		
Function Tests			
Base and upper control box work properly	✓		
Steering, driving and brakees operational	✓		
Fast speed cut out when platform is elevated	✓		
Platform raises to full extension	✓		
Emergency down and stop			✓
Pothole system operational			✓
Workplace Inspection - Survey work area for potential hazardous operating conditions prior to lift usage. Ensure hazards identified are addressed.	Present	Not Present	N/A
Floor/ground conditions: Drop-offs, holes, uneven surfaces, slope floors, unstable ground, etc.		✓	
Housekeeping: Debris, floor obstructions, cords, construction materials, supplies, etc.		✓	
Hazardous Energy: Electrical cables or panels, chemical/gas/drain lines, utilities, etc.	✓		
Overhead obstructions: Tight working conditions, pipe racks, beams, etc.	✓		
NOTE: If any item above requires maintenance or repair, notify your supervisor. At the end of your shift submit completed checklist to your supervisor.			
Comments:			

RUPERT PLUMBING AND HEATING

SCISSOR LIFT INSPECTION CHECKLIST

Inspected by: Jonathon Freeman	Date: 1-20-11		
Pre-Operation Procedures	Pass	Fail	N/A
Check hydraulic hoses and fittings	✓		
Check battery wiring and fluid level	✓		
Check tires for proper inflation, gouges, and wear			✓
Main Frame and Scissors			
Check structure and scissors for corrosion, cracks, bends	✓		
Check pivot pins and fasteners	✓		
Control System			
Check for damage to switches, indicators, and guards	✓		
Check terminals and plugs	✓		
Check cords	✓		
Manuals and Safety Decals			
ANSI Manual and Operator's Manual are in storage box	✓		
Capacity, safety and instruction decals are legible	✓		
Platform			
Rear closure and railing secure in pockets	✓		
All fasteners secure and railing in good condition	✓		
Function Tests			
Base and upper control box work properly	✓		
Steering, driving and brakees operational	✓		
Fast speed cut out when platform is elevated	✓		
Platform raises to full extension	✓		
Emergency down and stop	✓		
Pothole system operational	✓		
Workplace Inspection - Survey work area for potential hazardous operating conditions prior to lift usage. Ensure hazards identified are addressed.	Present	Not Present	N/A
Floor/ground conditions: Drop-offs, holes, uneven surfaces, slope floors, unstable ground, etc.	✓		
Housekeeping: Debris, floor obstructions, cords, construction materials, supplies, etc.		✓	
Hazardous Energy: Electrical cables or panels, chemical/gas/drain lines, utilities, etc.		✓	
Overhead obstructions: Tight working conditions, pipe racks, beams, etc.	✓	✓	

NOTE: If any item above requires maintenance or repair, notify your supervisor. At the end of your shift submit completed checklist to your supervisor.

Comments:

RUPERT PLUMBING AND HEATING

SCISSOR LIFT INSPECTION CHECKLIST

Inspected by: Stephen Spiers	Date: 1/19/17		
Pre-Operation Procedures	Pass	Fail	N/A
Check hydraulic hoses and fittings	✓		
Check battery wiring and fluid level	✓		
Check tires for proper inflation, gouges, and wear			✓
Main Frame and Scissors			
Check structure and scissors for corrosion, cracks, bends	✓		
Check pivot pins and fasteners	✓		
Control System			
Check for damage to switches, indicators, and guards	✓		
Check terminals and plugs	✓		
Check cords	✓		
Manuals and Safety Decals			
ANSI Manual and Operator's Manual are in storage box	✓		
Capacity, safety and instruction decals are legible	✓		
Platform			
Rear closure and railing secure in pockets	✓		
All fasteners secure and railing in good condition	✓		
Function Tests			
Base and upper control box work properly	✓		
Steering, driving and brakees operational	✓		
Fast speed cut out when platform is elevated	✓		
Platform raises to full extension	✓		
Emergency down and stop	✓		
Pothole system operational	✓		
Workplace Inspection - Survey work area for potential hazardous operating conditions prior to lift usage. Ensure hazards identified are addressed.	**Present**	**Not Present**	**N/A**
Floor/ground conditions: Drop-offs, holes, uneven surfaces, slope floors, unstable ground, etc.	✓		
Housekeeping: Debris, floor obstructions, cords, construction materials, supplies, etc.		✓	
Hazardous Energy: Electrical cables or panels, chemical/gas/drain lines, utilities, etc.		✓	
Overhead obstructions: Tight working conditions, pipe racks, beams, etc.		✓	

NOTE: If any item above requires maintenance or repair, notify your supervisor. At the end of your shift submit completed checklist to your supervisor.

Comments:

RUPERT PLUMBING AND HEATING

SCISSOR LIFT INSPECTION CHECKLIST Boom Lift

Inspected by: Jonathon Freeman Date: 1-11-17

Pre-Operation Procedures	Pass	Fail	N/A
Check hydraulic hoses and fittings	✓		
Check battery wiring and fluid level	✓		
Check tires for proper inflation, gouges, and wear	✓		
Main Frame and Scissors			
Check structure and scissors for corrosion, cracks, bends	✓		
Check pivot pins and fasteners	✓		
Control System			
Check for damage to switches, indicators, and guards	✓		
Check terminals and plugs	✓		
Check cords	✓		
Manuals and Safety Decals			
ANSI Manual and Operator's Manual are in storage box	✓		
Capacity, safety and instruction decals are legible	✓		
Platform			
Rear closure and railing secure in pockets	✓		
All fasteners secure and railing in good condition	✓		
Function Tests			
Base and upper control box work properly	✓		
Steering, driving and brakees operational	✓		
Fast speed cut out when platform is elevated	✓		
Platform raises to full extension	✓		
Emergency down and stop	✓		
Pothole system operational	✓		

Workplace Inspection - Survey work area for potential hazardous operating conditions prior to lift usage. Ensure hazards identified are addressed.	Present	Not Present	N/A
Floor/ground conditions: Drop-offs, holes, uneven surfaces, slope floors, unstable ground, etc.		✓	
Housekeeping: Debris, floor obstructions, cords, construction materials, supplies, etc.		✓	
Hazardous Energy: Electrical cables or panels, chemical/gas/drain lines, utilities, etc.	✓		
Overhead obstructions: Tight working conditions, pipe racks, beams, etc.	✓		

NOTE: If any item above requires maintenance or repair, notify your supervisor. At the end of your shift submit completed checklist to your supervisor.

Comments:

RUPERT PLUMBING AND HEATING

SCISSOR LIFT INSPECTION CHECKLIST Scissor Lift

Inspected by: Jonathon Freeman	Date: 1-11-17		
Pre-Operation Procedures	Pass	Fail	N/A
Check hydraulic hoses and fittings	✓		
Check battery wiring and fluid level	✓		
Check tires for proper inflation, gouges, and wear	✓		
Main Frame and Scissors			
Check structure and scissors for corrosion, cracks, bends	✓		
Check pivot pins and fasteners	✓		
Control System			
Check for damage to switches, indicators, and guards	✓		
Check terminals and plugs	✓		
Check cords	✓		
Manuals and Safety Decals			
ANSI Manual and Operator's Manual are in storage box	✓		
Capacity, safety and instruction decals are legible		✓	
Platform			
Rear closure and railing secure in pockets	✓		
All fasteners secure and railing in good condition	✓		
Function Tests			
Base and upper control box work properly	✓		
Steering, driving and brakees operational	✓		
Fast speed cut out when platform is elevated	✓		
Platform raises to full extension	✓		
Emergency down and stop	✓		
Pothole system operational	✓		
Workplace Inspection - Survey work area for potential hazardous operating conditions prior to lift usage. Ensure hazards identified are addressed.	**Present**	**Not Present**	**N/A**
Floor/ground conditions: Drop-offs, holes, uneven surfaces, slope floors, unstable ground, etc.	✓		
Housekeeping: Debris, floor obstructions, cords, construction materials, supplies, etc.		✓	
Hazardous Energy: Electrical cables or panels, chemical/gas/drain lines, utilities, etc.		✓	
Overhead obstructions: Tight working conditions, pipe racks, beams, etc.	✓		

NOTE: If any item above requires maintenance or repair, notify your supervisor. At the end of your shift submit completed checklist to your supervisor.

Comments:

Ultra Painting

RUPERT PLUMBING AND HEATING

SCISSOR LIFT INSPECTION CHECKLIST SN 148369

Inspected by: JAVIER NAVEA Date: 01 10 2017

Pre-Operation Procedures	Pass	Fail	N/A
Check hydraulic hoses and fittings	✓		
Check battery wiring and fluid level	✓		
Check tires for proper inflation, gouges, and wear	✓		
Main Frame and Scissors			
Check structure and scissors for corrosion, cracks, bends	✓		
Check pivot pins and fasteners	✓		
Control System			
Check for damage to switches, indicators, and guards	✓		
Check terminals and plugs	✓		
Check cords	✓		
Manuals and Safety Decals			
ANSI Manual and Operator's Manual are in storage box	✓		
Capacity, safety and instruction decals are legible	✓		
Platform			
Rear closure and railing secure in pockets	✓		
All fasteners secure and railing in good condition	✓		
Function Tests			
Base and upper control box work properly	✓		
Steering, driving and brakees operational	✓		
Fast speed cut out when platform is elevated	✓		
Platform raises to full extension	✓		
Emergency down and stop	✓		
Pothole system operational	✓		

Workplace Inspection - Survey work area for potential hazardous operating conditions prior to lift usage. Ensure hazards identified are addressed.	Present	Not Present	N/A
Floor/ground conditions: Drop-offs, holes, uneven surfaces, slope floors, unstable ground, etc.	✓		
Housekeeping: Debris, floor obstructions, cords, construction materials, supplies, etc.	✓		
Hazardous Energy: Electrical cables or panels, chemical/gas/drain lines, utilities, etc.	✓		
Overhead obstructions: Tight working conditions, pipe racks, beams, etc.	✓		

NOTE: If any item above requires maintenance or repair, notify your supervisor. At the end of your shift submit completed checklist to your supervisor.

Comments:

ULTRA PAINTING

~~RUPERT PLUMBING AND HEATING~~

BOOM JLG 400S

~~SCISSOR~~ LIFT INSPECTION CHECKLIST SN 0300102097

Inspected by: JAVIER NAJERA	Date:		
Pre-Operation Procedures	Pass	Fail	N/A
Check hydraulic hoses and fittings	✓		
Check battery wiring and fluid level	✓		
Check tires for proper inflation, gouges, and wear	✓		
Main Frame and Scissors			
Check structure and scissors for corrosion, cracks, bends	✓		
Check pivot pins and fasteners	✓		
Control System			
Check for damage to switches, indicators, and guards	✓		
Check terminals and plugs	✓		
Check cords	✓		
Manuals and Safety Decals			
ANSI Manual and Operator's Manual are in storage box	✓		
Capacity, safety and instruction decals are legible	✓		
Platform			
Rear closure and railing secure in pockets	✓		
All fasteners secure and railing in good condition	✓		
Function Tests			
Base and upper control box work properly	✓		
Steering, driving and brakees operational	✓		
Fast speed cut out when platform is elevated			✓
Platform raises to full extension			✓
Emergency down and stop	✓		
Pothole system operational			✓
Workplace Inspection - Survey work area for potential hazardous operating conditions prior to lift usage. Ensure hazards identified are addressed.	Present	Not Present	N/A
Floor/ground conditions: Drop-offs, holes, uneven surfaces, slope floors, unstable ground, etc.	✓		
Housekeeping: Debris, floor obstructions, cords, construction materials, supplies, etc.		✓	
Hazardous Energy: Electrical cables or panels, chemical/gas/drain lines, utilities, etc.	✓		
Overhead obstructions: Tight working conditions, pipe racks, beams, etc.	✓		

NOTE: If any item above requires maintenance or repair, notify your supervisor. At the end of your shift submit completed checklist to your supervisor.

Comments:

RUPERT PLUMBING AND HEATING

SCISSOR LIFT INSPECTION CHECKLIST 65 1930

Inspected by: Robert Chaver Date: 01 10 2017

Pre-Operation Procedures	Pass	Fail	N/A
Check hydraulic hoses and fittings	✓		
Check battery wiring and fluid level	✓		
Check tires for proper inflation, gouges, and wear	✓		
Main Frame and Scissors			
Check structure and scissors for corrosion, cracks, bends	✓		
Check pivot pins and fasteners	✓		
Control System			
Check for damage to switches, indicators, and guards	✓		
Check terminals and plugs	✓		
Check cords	✓		
Manuals and Safety Decals			
ANSI Manual and Operator's Manual are in storage box	✓		
Capacity, safety and instruction decals are legible	✓		
Platform			
Rear closure and railing secure in pockets	✓		
All fasteners secure and railing in good condition	✓		
Function Tests			
Base and upper control box work properly	✓		
Steering, driving and brakees operational	✓		
Fast speed cut out when platform is elevated	✓		
Platform raises to full extension	✓		
Emergency down and stop	✓		
Pothole system operational	✓		

Workplace Inspection - Survey work area for potential hazardous operating conditions prior to lift usage. Ensure hazards identified are addressed.	Present	Not Present	N/A
Floor/ground conditions: Drop-offs, holes, uneven surfaces, slope floors, unstable ground, etc.	✓		
Housekeeping: Debris, floor obstructions, cords, construction materials, supplies, etc.	✓		
Hazardous Energy: Electrical cables or panels, chemical/gas/drain lines, utilities, etc.	✓		
Overhead obstructions: Tight working conditions, pipe racks, beams, etc.	✓		

NOTE: If any item above requires maintenance or repair, notify your supervisor. At the end of your shift submit completed checklist to your supervisor.

Comments:

RUPERT PLUMBING AND HEATING

SCISSOR LIFT INSPECTION CHECKLIST 65 1930

Inspected by: JAVIER NAVERA	Date: 01 09 2017		
Pre-Operation Procedures	Pass	Fail	N/A
Check hydraulic hoses and fittings	✓		
Check battery wiring and fluid level	✓		
Check tires for proper inflation, gouges, and wear	✓		
Main Frame and Scissors			
Check structure and scissors for corrosion, cracks, bends	✓		
Check pivot pins and fasteners	✓		
Control System			
Check for damage to switches, indicators, and guards	✓		
Check terminals and plugs	✓		
Check cords	✓		
Manuals and Safety Decals			
ANSI Manual and Operator's Manual are in storage box	✓		
Capacity, safety and instruction decals are legible	✓		
Platform			
Rear closure and railing secure in pockets	✓		
All fasteners secure and railing in good condition	✓		
Function Tests			
Base and upper control box work properly	✓		
Steering, driving and brakees operational	✓		
Fast speed cut out when platform is elevated	✓		
Platform raises to full extension	✓		
Emergency down and stop	✓		
Pothole system operational			✓
Workplace Inspection - Survey work area for potential hazardous operating conditions prior to lift usage. Ensure hazards identified are addressed.	**Present**	**Not Present**	**N/A**
Floor/ground conditions: Drop-offs, holes, uneven surfaces, slope floors, unstable ground, etc.	✓		
Housekeeping: Debris, floor obstructions, cords, construction materials, supplies, etc.			✓
Hazardous Energy: Electrical cables or panels, chemical/gas/drain lines, utilities, etc.	✓		
Overhead obstructions: Tight working conditions, pipe racks, beams, etc.	✓		

NOTE: If any item above requires maintenance or repair, notify your supervisor. At the end of your shift submit completed checklist to your supervisor.

Comments:

RUPERT PLUMBING AND HEATING

Boom JLG 4005

SCISSOR LIFT INSPECTION CHECKLIST SN 0300108097

Inspected by: JAUER Nadeau	Date: 01 05 2017		
Pre-Operation Procedures	Pass	Fail	N/A
Check hydraulic hoses and fittings	✓		
Check battery wiring and fluid level	✓		
Check tires for proper inflation, gouges, and wear	✓		
Main Frame and Scissors	✓		
Check structure and scissors for corrosion, cracks, bends	✓		
Check pivot pins and fasteners	✓		
Control System			
Check for damage to switches, indicators, and guards	✓		
Check terminals and plugs	✓		
Check cords	✓		
Manuals and Safety Decals			
ANSI Manual and Operator's Manual are in storage box	✓		
Capacity, safety and instruction decals are legible	✓		
Platform			
Rear closure and railing secure in pockets	✓		
All fasteners secure and railing in good condition	✓		
Function Tests			
Base and upper control box work properly	✓		
Steering, driving and brakees operational	✓		
Fast speed cut out when platform is elevated			✓
Platform raises to full extension			✓
Emergency down and stop	✓		
Pothole system operational			
Workplace Inspection - Survey work area for potential hazardous operating conditions prior to lift usage. Ensure hazards identified are addressed.	Present	Not Present	N/A
Floor/ground conditions: Drop-offs, holes, uneven surfaces, slope floors, unstable ground, etc.	✓		
Housekeeping: Debris, floor obstructions, cords, construction materials, supplies, etc.		✓	
Hazardous Energy: Electrical cables or panels, chemical/gas/drain lines, utilities, etc.	✓		
Overhead obstructions: Tight working conditions, pipe racks, beams, etc.	✓		

NOTE: If any item above requires maintenance or repair, notify your supervisor. At the end of your shift submit completed checklist to your supervisor.

Comments:

RUPERT PLUMBING AND HEATING

SCISSOR LIFT INSPECTION CHECKLIST GS 1930

Inspected by: JAVIER ACUÑA	Date: 01 05 2017		
Pre-Operation Procedures	Pass	Fail	N/A
Check hydraulic hoses and fittings	✓		
Check battery wiring and fluid level	✓		
Check tires for proper inflation, gouges, and wear	✓		
Main Frame and Scissors			
Check structure and scissors for corrosion, cracks, bends	✓		
Check pivot pins and fasteners	✓		
Control System	✓		
Check for damage to switches, indicators, and guards	✓		
Check terminals and plugs	✓		
Check cords	✓		
Manuals and Safety Decals			
ANSI Manual and Operator's Manual are in storage box	✓		
Capacity, safety and instruction decals are legible	✓		
Platform			
Rear closure and railing secure in pockets	✓		
All fasteners secure and railing in good condition	✓		
Function Tests			
Base and upper control box work properly	✓		
Steering, driving and brakees operational	✓		
Fast speed cut out when platform is elevated	✓		
Platform raises to full extension	✓		
Emergency down and stop	✓		
Pothole system operational			✓
Workplace Inspection - Survey work area for potential hazardous operating conditions prior to lift usage. Ensure hazards identified are addressed.	Present	Not Present	N/A
Floor/ground conditions: Drop-offs, holes, uneven surfaces, slope floors, unstable ground, etc.	✓		
Housekeeping: Debris, floor obstructions, cords, construction materials, supplies, etc.			✓
Hazardous Energy: Electrical cables or panels, chemical/gas/drain lines, utilities, etc.	✓		
Overhead obstructions: Tight working conditions, pipe racks, beams, etc.	✓		

NOTE: If any item above requires maintenance or repair, notify your supervisor. At the end of your shift submit completed checklist to your supervisor.

Comments:

RUPERT PLUMBING AND HEATING

SCISSOR LIFT INSPECTION CHECKLIST GS 1930

Inspected by: JAVIER ARJONA	Date: 01 04 2017		
Pre-Operation Procedures	Pass	Fail	N/A
Check hydraulic hoses and fittings	✓		
Check battery wiring and fluid level	✓		
Check tires for proper inflation, gouges, and wear	✓		
Main Frame and Scissors	✓		
Check structure and scissors for corrosion, cracks, bends	✓		
Check pivot pins and fasteners	✓		
Control System	✓		
Check for damage to switches, indicators, and guards	✓		
Check terminals and plugs	✓		
Check cords	✓		
Manuals and Safety Decals	✓		
ANSI Manual and Operator's Manual are in storage box	✓		
Capacity, safety and instruction decals are legible	✓		
Platform	✓		
Rear closure and railing secure in pockets	✓		
All fasteners secure and railing in good condition	✓		
Function Tests	✓		
Base and upper control box work properly	✓		
Steering, driving and brakees operational	✓		
Fast speed cut out when platform is elevated	✓		
Platform raises to full extension	✓		
Emergency down and stop	✓		
Pothole system operational			✓
Workplace Inspection - Survey work area for potential hazardous operating conditions prior to lift usage. Ensure hazards identified are addressed.	Present	Not Present	N/A
Floor/ground conditions: Drop-offs, holes, uneven surfaces, slope floors, unstable ground, etc.	✓		
Housekeeping: Debris, floor obstructions, cords, construction materials, supplies, etc.			✓
Hazardous Energy: Electrical cables or panels, chemical/gas/drain lines, utilities, etc.	✓		
Overhead obstructions: Tight working conditions, pipe racks, beams, etc.	✓		

NOTE: If any item above requires maintenance or repair, notify your supervisor. At the end of your shift submit completed checklist to your supervisor.

Comments:

ULTRA Painting

RUPERT PLUMBING AND HEATING

BOOM JLG 4005

SCISSOR LIFT INSPECTION CHECKLIST SN 0300109097

Inspected by: JAVIER RIVERA Date: 01 04 2017

Pre-Operation Procedures	Pass	Fail	N/A
Check hydraulic hoses and fittings	✓		
Check battery wiring and fluid level	✓		
Check tires for proper inflation, gouges, and wear	✓		
Main Frame and Scissors			
Check structure and scissors for corrosion, cracks, bends	✓		
Check pivot pins and fasteners	✓		
Control System			
Check for damage to switches, indicators, and guards	✓		
Check terminals and plugs	✓		
Check cords	✓		
Manuals and Safety Decals			
ANSI Manual and Operator's Manual are in storage box	✓		
Capacity, safety and instruction decals are legible	✓		
Platform			
Rear closure and railing secure in pockets	✓		
All fasteners secure and railing in good condition	✓		
Function Tests			
Base and upper control box work properly	✓		
Steering, driving and brakees operational	✓		
Fast speed cut out when platform is elevated			✓
Platform raises to full extension			✓
Emergency down and stop	✓		
Pothole system operational	✓		✓

Workplace Inspection - Survey work area for potential hazardous operating conditions prior to lift usage. Ensure hazards identified are addressed.	Present	Not Present	N/A
Floor/ground conditions: Drop-offs, holes, uneven surfaces, slope floors, unstable ground, etc.	✓		
Housekeeping: Debris, floor obstructions, cords, construction materials, supplies, etc.		✓	
Hazardous Energy: Electrical cables or panels, chemical/gas/drain lines, utilities, etc.	✓		
Overhead obstructions: Tight working conditions, pipe racks, beams, etc.	✓		

NOTE: If any item above requires maintenance or repair, notify your supervisor. At the end of your shift submit completed checklist to your supervisor.

Comments:

RUPERT PLUMBING AND HEATING

GS-1930 #1

10-17-16

SCISSOR LIFT INSPECTION CHECKLIST

Inspected by: ANDRES PORRAS	Date: 10/17/16		
Pre-Operation Procedures	Pass	Fail	N/A
Check hydraulic hoses and fittings	X		
Check battery wiring and fluid level	X		
Check tires for proper inflation, gouges, and wear	X		
Main Frame and Scissors			
Check structure and scissors for corrosion, cracks, bends	X		
Check pivot pins and fasteners	X		
Control System			
Check for damage to switches, indicators, and guards	X		
Check terminals and plugs	X		
Check cords	X		
Manuals and Safety Decals			
ANSI Manual and Operator's Manual are in storage box	X		
Capacity, safety and instruction decals are legible	X		
Platform			
Rear closure and railing secure in pockets	X		
All fasteners secure and railing in good condition	X		
Function Tests			
Base and upper control box work properly	X		
Steering, driving and brakees operational	X		
Fast speed cut out when platform is elevated	X		
Platform raises to full extension	X		
Emergency down and stop	X		
Pothole system operational	X		
Workplace Inspection - Survey work area for potential hazardous operating conditions prior to lift usage. Ensure hazards identified are addressed.	Present	Not Present	N/A
Floor/ground conditions: Drop-offs, holes, uneven surfaces, slope floors, unstable ground, etc.	X		
Housekeeping: Debris, floor obstructions, cords, construction materials, supplies, etc.	X		
Hazardous Energy: Electrical cables or panels, chemical/gas/drain lines, utilities, etc.	X		
Overhead obstructions: Tight working conditions, pipe racks, beams, etc.	X		

NOTE: If any item above requires maintenance or repair, notify your supervisor. At the end of your shift submit completed checklist to your supervisor.

Comments:

RUPERT PLUMBING AND HEATING

GENIE GS-1930 #2

SCISSOR LIFT INSPECTION CHECKLIST

Inspected by: ANDRES PORRAS	Date: 10/17/16		
Pre-Operation Procedures	Pass	Fail	N/A
Check hydraulic hoses and fittings	X		
Check battery wiring and fluid level	X		
Check tires for proper inflation, gouges, and wear	X		
Main Frame and Scissors			
Check structure and scissors for corrosion, cracks, bends	X		
Check pivot pins and fasteners	X		
Control System			
Check for damage to switches, indicators, and guards	X		
Check terminals and plugs	X		
Check cords	X		
Manuals and Safety Decals			
ANSI Manual and Operator's Manual are in storage box	X		
Capacity, safety and instruction decals are legible	X		
Platform			
Rear closure and railing secure in pockets	X		
All fasteners secure and railing in good condition	X		
Function Tests			
Base and upper control box work properly	X		
Steering, driving and brakees operational	X		
Fast speed cut out when platform is elevated	X		
Platform raises to full extension	X		
Emergency down and stop	X		
Pothole system operational	X		
Workplace Inspection - Survey work area for potential hazardous operating conditions prior to lift usage. Ensure hazards identified are addressed.	Present	Not Present	N/A
Floor/ground conditions: Drop-offs, holes, uneven surfaces, slope floors, unstable ground, etc.	X		
Housekeeping: Debris, floor obstructions, cords, construction materials, supplies, etc.	X		
Hazardous Energy: Electrical cables or panels, chemical/gas/drain lines, utilities, etc.	X		
Overhead obstructions: Tight working conditions, pipe racks, beams, etc.	X		

NOTE: If any item above requires maintenance or repair, notify your supervisor. At the end of your shift submit completed checklist to your supervisor.

Comments:

RUPERT PLUMBING AND HEATING

G.S. 1930 #1

10-18-16

SCISSOR LIFT INSPECTION CHECKLIST

Inspected by: Andres Porras J		Date: 10/18/16	
Pre-Operation Procedures	Pass	Fail	N/A
Check hydraulic hoses and fittings	X		
Check battery wiring and fluid level	X		
Check tires for proper inflation, gouges, and wear	X		
Main Frame and Scissors			
Check structure and scissors for corrosion, cracks, bends	X		
Check pivot pins and fasteners	X		
Control System			
Check for damage to switches, indicators, and guards	X		
Check terminals and plugs	X		
Check cords	X		
Manuals and Safety Decals			
ANSI Manual and Operator's Manual are in storage box	X		
Capacity, safety and instruction decals are legible	X		
Platform			
Rear closure and railing secure in pockets	X		
All fasteners secure and railing in good condition	X		
Function Tests			
Base and upper control box work properly	X		
Steering, driving and brakees operational	X		
Fast speed cut out when platform is elevated	X		
Platform raises to full extension	X		
Emergency down and stop	X		
Pothole system operational	X		
Workplace Inspection - Survey work area for potential hazardous operating conditions prior to lift usage. Ensure hazards identified are addressed.	Present	Not Present	N/A
Floor/ground conditions: Drop-offs, holes, uneven surfaces, slope floors, unstable ground, etc.	X		
Housekeeping: Debris, floor obstructions, cords, construction materials, supplies, etc.	X		
Hazardous Energy: Electrical cables or panels, chemical/gas/drain lines, utilities, etc.	X		
Overhead obstructions: Tight working conditions, pipe racks, beams, etc.	X		

NOTE: If any item above requires maintenance or repair, notify your supervisor. At the end of your shift submit completed checklist to your supervisor.

Comments:

RUPERT PLUMBING AND HEATING

GS 1930 #2

SCISSOR LIFT INSPECTION CHECKLIST

10-18-16

Inspected by: Andrus Borrows	Date: 10/18/16		
Pre-Operation Procedures	Pass	Fail	N/A
Check hydraulic hoses and fittings	✓		
Check battery wiring and fluid level	✓		
Check tires for proper inflation, gouges, and wear	✓		
Main Frame and Scissors			
Check structure and scissors for corrosion, cracks, bends	✓		
Check pivot pins and fasteners	✓		
Control System			
Check for damage to switches, indicators, and guards	✓		
Check terminals and plugs	✓		
Check cords	✓		
Manuals and Safety Decals			
ANSI Manual and Operator's Manual are in storage box	✓		
Capacity, safety and instruction decals are legible	✓		
Platform			
Rear closure and railing secure in pockets	✓		
All fasteners secure and railing in good condition	✓		
Function Tests			
Base and upper control box work properly	✓		
Steering, driving and brakees operational	✓		
Fast speed cut out when platform is elevated	✓		
Platform raises to full extension	✓		
Emergency down and stop	✓		
Pothole system operational	✓		
Workplace Inspection - Survey work area for potential hazardous operating conditions prior to lift usage. Ensure hazards identified are addressed.	Present	Not Present	N/A
Floor/ground conditions: Drop-offs, holes, uneven surfaces, slope floors, unstable ground, etc.	✓		
Housekeeping: Debris, floor obstructions, cords, construction materials, supplies, etc.	✓		
Hazardous Energy: Electrical cables or panels, chemical/gas/drain lines, utilities, etc.	✓		
Overhead obstructions: Tight working conditions, pipe racks, beams, etc.	✓		

NOTE: If any item above requires maintenance or repair, notify your supervisor. At the end of your shift submit completed checklist to your supervisor.

Comments:

RUPERT PLUMBING AND HEATING

GS 1930 #7

10-19-16

SCISSOR LIFT INSPECTION CHECKLIST

Inspected by: Andres Porras	Date: 10/19/16		
Pre-Operation Procedures	Pass	Fail	N/A
Check hydraulic hoses and fittings	X		
Check battery wiring and fluid level	X		
Check tires for proper inflation, gouges, and wear	X		
Main Frame and Scissors			
Check structure and scissors for corrosion, cracks, bends	X		
Check pivot pins and fasteners	X		
Control System			
Check for damage to switches, indicators, and guards	X		
Check terminals and plugs	X		
Check cords	X		
Manuals and Safety Decals			
ANSI Manual and Operator's Manual are in storage box	X		
Capacity, safety and instruction decals are legible	X		
Platform			
Rear closure and railing secure in pockets	X		
All fasteners secure and railing in good condition	X		
Function Tests			
Base and upper control box work properly	X		
Steering, driving and brakees operational	X		
Fast speed cut out when platform is elevated	X		
Platform raises to full extension	X		
Emergency down and stop	X		
Pothole system operational	X		
Workplace Inspection - Survey work area for potential hazardous operating conditions prior to lift usage. Ensure hazards identified are addressed.	Present	Not Present	N/A
Floor/ground conditions: Drop-offs, holes, uneven surfaces, slope floors, unstable ground, etc.	X		
Housekeeping: Debris, floor obstructions, cords, construction materials, supplies, etc.	X		
Hazardous Energy: Electrical cables or panels, chemical/gas/drain lines, utilities, etc.	X		
Overhead obstructions: Tight working conditions, pipe racks, beams, etc.	X		

NOTE: If any item above requires maintenance or repair, notify your supervisor. At the end of your shift submit completed checklist to your supervisor.

Comments:

RUPERT PLUMBING AND HEATING

GS 1930 2

10-19-16

SCISSOR LIFT INSPECTION CHECKLIST

Inspected by: Andres Porras	Date: 10/19/16		
Pre-Operation Procedures	Pass	Fail	N/A
Check hydraulic hoses and fittings	X		
Check battery wiring and fluid level	X		
Check tires for proper inflation, gouges, and wear	X		
Main Frame and Scissors			
Check structure and scissors for corrosion, cracks, bends	X		
Check pivot pins and fasteners	X		
Control System			
Check for damage to switches, indicators, and guards	X		
Check terminals and plugs	X		
Check cords	X		
Manuals and Safety Decals			
ANSI Manual and Operator's Manual are in storage box	X		
Capacity, safety and instruction decals are legible	X		
Platform			
Rear closure and railing secure in pockets	X		
All fasteners secure and railing in good condition	X		
Function Tests			
Base and upper control box work properly	X		
Steering, driving and brakees operational	X		
Fast speed cut out when platform is elevated	X		
Platform raises to full extension	X		
Emergency down and stop	X		
Pothole system operational	X		
Workplace Inspection - Survey work area for potential hazardous operating conditions prior to lift usage. Ensure hazards identified are addressed.	Present	Not Present	N/A
Floor/ground conditions: Drop-offs, holes, uneven surfaces, slope floors, unstable ground, etc.	X		
Housekeeping: Debris, floor obstructions, cords, construction materials, supplies, etc.	X		
Hazardous Energy: Electrical cables or panels, chemical/gas/drain lines, utilities, etc.	X		
Overhead obstructions: Tight working conditions, pipe racks, beams, etc.	X		

NOTE: If any item above requires maintenance or repair, notify your supervisor. At the end of your shift submit completed checklist to your supervisor.

Comments:

RUPERT PLUMBING AND HEATING

GS 1930 #1

SCISSOR LIFT INSPECTION CHECKLIST

Inspected by: ANDRES PORRAS	Date: 10-24-16		
Pre-Operation Procedures	Pass	Fail	N/A
Check hydraulic hoses and fittings	X		
Check battery wiring and fluid level	X		
Check tires for proper inflation, gouges, and wear			X
Main Frame and Scissors			
Check structure and scissors for corrosion, cracks, bends	X		
Check pivot pins and fasteners	X		
Control System			
Check for damage to switches, indicators, and guards	X		
Check terminals and plugs	X		
Check cords	X		
Manuals and Safety Decals			
ANSI Manual and Operator's Manual are in storage box	X		
Capacity, safety and instruction decals are legible	X		
Platform			
Rear closure and railing secure in pockets	X		
All fasteners secure and railing in good condition	X		
Function Tests			
Base and upper control box work properly	X		
Steering, driving and brakees operational	X		
Fast speed cut out when platform is elevated	X		
Platform raises to full extension	X		
Emergency down and stop	X		
Pothole system operational	X		
Workplace Inspection - Survey work area for potential hazardous operating conditions prior to lift usage. Ensure hazards identified are addressed.	Present	Not Present	N/A
Floor/ground conditions: Drop-offs, holes, uneven surfaces, slope floors, unstable ground, etc.	X		
Housekeeping: Debris, floor obstructions, cords, construction materials, supplies, etc.	X		
Hazardous Energy: Electrical cables or panels, chemical/gas/drain lines, utilities, etc.		X	
Overhead obstructions: Tight working conditions, pipe racks, beams, etc.	X		

NOTE: If any item above requires maintenance or repair, notify your supervisor. At the end of your shift submit completed checklist to your supervisor.

Comments:

RUPERT PLUMBING AND HEATING

6-8-1930 #2

SCISSOR LIFT INSPECTION CHECKLIST

Inspected by: ANDRES PORRAS	Date: 10-24-16		
Pre-Operation Procedures	Pass	Fail	N/A
Check hydraulic hoses and fittings	X		
Check battery wiring and fluid level	X		
Check tires for proper inflation, gouges, and wear	X		X
Main Frame and Scissors			
Check structure and scissors for corrosion, cracks, bends	X		
Check pivot pins and fasteners	X		
Control System			
Check for damage to switches, indicators, and guards	X		
Check terminals and plugs	X		
Check cords	X		
Manuals and Safety Decals			
ANSI Manual and Operator's Manual are in storage box	X		
Capacity, safety and instruction decals are legible	X		
Platform			
Rear closure and railing secure in pockets	X		
All fasteners secure and railing in good condition	X		
Function Tests			
Base and upper control box work properly	X		
Steering, driving and brakees operational	X		
Fast speed cut out when platform is elevated	X		
Platform raises to full extension	X		
Emergency down and stop	X		
Pothole system operational	X		
Workplace Inspection - Survey work area for potential hazardous operating conditions prior to lift usage. Ensure hazards identified are addressed.	Present	Not Present	N/A
Floor/ground conditions: Drop-offs, holes, uneven surfaces, slope floors, unstable ground, etc.	X		
Housekeeping: Debris, floor obstructions, cords, construction materials, supplies, etc.	X		
Hazardous Energy: Electrical cables or panels, chemical/gas/drain lines, utilities, etc.	X		
Overhead obstructions: Tight working conditions, pipe racks, beams, etc.	X		

NOTE: If any item above requires maintenance or repair, notify your supervisor. At the end of your shift submit completed checklist to your supervisor.

Comments:

RUPERT PLUMBING AND HEATING

GS 1930 #7

SCISSOR LIFT INSPECTION CHECKLIST

Inspected by: ANDRES PORRAS	Date: 10-25-16		
Pre-Operation Procedures	Pass	Fail	N/A
Check hydraulic hoses and fittings	X		
Check battery wiring and fluid level	X		
Check tires for proper inflation, gouges, and wear	X		
Main Frame and Scissors			
Check structure and scissors for corrosion, cracks, bends	X		
Check pivot pins and fasteners	X		
Control System			
Check for damage to switches, indicators, and guards	X		
Check terminals and plugs	X		
Check cords	X		
Manuals and Safety Decals			
ANSI Manual and Operator's Manual are in storage box	X		
Capacity, safety and instruction decals are legible	X		
Platform			
Rear closure and railing secure in pockets	X		
All fasteners secure and railing in good condition	X		
Function Tests			
Base and upper control box work properly	X		
Steering, driving and brakees operational	X		
Fast speed cut out when platform is elevated	X		
Platform raises to full extension	X		
Emergency down and stop	X		
Pothole system operational	X		
Workplace Inspection - Survey work area for potential hazardous operating conditions prior to lift usage. Ensure hazards identified are addressed.	Present	Not Present	N/A
Floor/ground conditions: Drop-offs, holes, uneven surfaces, slope floors, unstable ground, etc.	X		
Housekeeping: Debris, floor obstructions, cords, construction materials, supplies, etc.	X		
Hazardous Energy: Electrical cables or panels, chemical/gas/drain lines, utilities, etc.	X		
Overhead obstructions: Tight working conditions, pipe racks, beams, etc.	X		

NOTE: If any item above requires maintenance or repair, notify your supervisor. At the end of your shift submit completed checklist to your supervisor.

Comments:

RUPERT PLUMBING AND HEATING

RP GS 1930 #2

SCISSOR LIFT INSPECTION CHECKLIST

Inspected by: ANDRES PORRAS	Date: 10-25-16		
Pre-Operation Procedures	Pass	Fail	N/A
Check hydraulic hoses and fittings	X		
Check battery wiring and fluid level	X		
Check tires for proper inflation, gouges, and wear	X		
Main Frame and Scissors			
Check structure and scissors for corrosion, cracks, bends	X		
Check pivot pins and fasteners	X		
Control System			
Check for damage to switches, indicators, and guards	X		
Check terminals and plugs	X		
Check cords	X		
Manuals and Safety Decals			
ANSI Manual and Operator's Manual are in storage box	X		
Capacity, safety and instruction decals are legible	X		
Platform			
Rear closure and railing secure in pockets	X		
All fasteners secure and railing in good condition	X		
Function Tests			
Base and upper control box work properly	X		
Steering, driving and brakees operational	X		
Fast speed cut out when platform is elevated	X		
Platform raises to full extension	X		
Emergency down and stop	X		
Pothole system operational	X		
Workplace Inspection - Survey work area for potential hazardous operating conditions prior to lift usage. Ensure hazards identified are addressed.	Present	Not Present	N/A
Floor/ground conditions: Drop-offs, holes, uneven surfaces, slope floors, unstable ground, etc.	X		
Housekeeping: Debris, floor obstructions, cords, construction materials, supplies, etc.	X		
Hazardous Energy: Electrical cables or panels, chemical/gas/drain lines, utilities, etc.	X		
Overhead obstructions: Tight working conditions, pipe racks, beams, etc.	X		

NOTE: If any item above requires maintenance or repair, notify your supervisor. At the end of your shift submit completed checklist to your supervisor.

Comments:

RUPERT PLUMBING AND HEATING

GS 1930 #7

SCISSOR LIFT INSPECTION CHECKLIST

Inspected by: ANDRES PORRAS	Date: 10-26-16		
Pre-Operation Procedures	Pass	Fail	N/A
Check hydraulic hoses and fittings	X		
Check battery wiring and fluid level	X		
Check tires for proper inflation, gouges, and wear	X		
Main Frame and Scissors			
Check structure and scissors for corrosion, cracks, bends	X		
Check pivot pins and fasteners	X		
Control System	X		
Check for damage to switches, indicators, and guards	X		
Check terminals and plugs	X		
Check cords	X		
Manuals and Safety Decals			
ANSI Manual and Operator's Manual are in storage box	X		
Capacity, safety and instruction decals are legible	X		
Platform			
Rear closure and railing secure in pockets	X		
All fasteners secure and railing in good condition	X		
Function Tests			
Base and upper control box work properly	X		
Steering, driving and brakees operational	X		
Fast speed cut out when platform is elevated	X		
Platform raises to full extension	X		
Emergency down and stop	X		
Pothole system operational	X		
Workplace Inspection - Survey work area for potential hazardous operating conditions prior to lift usage. Ensure hazards identified are addressed.	Present	Not Present	N/A
Floor/ground conditions: Drop-offs, holes, uneven surfaces, slope floors, unstable ground, etc.	X		
Housekeeping: Debris, floor obstructions, cords, construction materials, supplies, etc.	X		
Hazardous Energy: Electrical cables or panels, chemical/gas/drain lines, utilities, etc.	X		
Overhead obstructions: Tight working conditions, pipe racks, beams, etc.	X		

NOTE: If any item above requires maintenance or repair, notify your supervisor. At the end of your shift submit completed checklist to your supervisor.

Comments:

RUPERT PLUMBING AND HEATING

GS 1930 #2

SCISSOR LIFT INSPECTION CHECKLIST

Inspected by: ANDRES PERRAS	Date: 10-26-16		
Pre-Operation Procedures	Pass	Fail	N/A
Check hydraulic hoses and fittings	X		
Check battery wiring and fluid level	X		
Check tires for proper inflation, gouges, and wear	X		
Main Frame and Scissors			
Check structure and scissors for corrosion, cracks, bends	X		
Check pivot pins and fasteners	X		
Control System			
Check for damage to switches, indicators, and guards	X		
Check terminals and plugs	X		
Check cords	X		
Manuals and Safety Decals			
ANSI Manual and Operator's Manual are in storage box	X		
Capacity, safety and instruction decals are legible	X		
Platform			
Rear closure and railing secure in pockets	X		
All fasteners secure and railing in good condition	X		
Function Tests			
Base and upper control box work properly	X		
Steering, driving and brakees operational	X		
Fast speed cut out when platform is elevated	X		
Platform raises to full extension	X		
Emergency down and stop	X		
Pothole system operational	X		
Workplace Inspection - Survey work area for potential hazardous operating conditions prior to lift usage. Ensure hazards identified are addressed.	Present	Not Present	N/A
Floor/ground conditions: Drop-offs, holes, uneven surfaces, slope floors, unstable ground, etc.	X		
Housekeeping: Debris, floor obstructions, cords, construction materials, supplies, etc.	X		
Hazardous Energy: Electrical cables or panels, chemical/gas/drain lines, utilities, etc.	X		
Overhead obstructions: Tight working conditions, pipe racks, beams, etc.	X		

NOTE: If any item above requires maintenance or repair, notify your supervisor. At the end of your shift submit completed checklist to your supervisor.

Comments:

RUPERT PLUMBING AND HEATING

GS 1930 #1

SCISSOR LIFT INSPECTION CHECKLIST

Inspected by: Andrus Parrish Jr	Date: 10-27-14		
Pre-Operation Procedures	Pass	Fail	N/A
Check hydraulic hoses and fittings	X		
Check battery wiring and fluid level	X		
Check tires for proper inflation, gouges, and wear	X		
Main Frame and Scissors			
Check structure and scissors for corrosion, cracks, bends	X		
Check pivot pins and fasteners	X		
Control System			
Check for damage to switches, indicators, and guards	X		
Check terminals and plugs	X		
Check cords	X		
Manuals and Safety Decals			
ANSI Manual and Operator's Manual are in storage box	X		
Capacity, safety and instruction decals are legible	X		
Platform			
Rear closure and railing secure in pockets	X		
All fasteners secure and railing in good condition	X		
Function Tests			
Base and upper control box work properly	X		
Steering, driving and brakees operational	X		
Fast speed cut out when platform is elevated	X		
Platform raises to full extension	X		
Emergency down and stop	X		
Pothole system operational	X		
Workplace Inspection - Survey work area for potential hazardous operating conditions prior to lift usage. Ensure hazards identified are addressed.	Present	Not Present	N/A
Floor/ground conditions: Drop-offs, holes, uneven surfaces, slope floors, unstable ground, etc.	X		
Housekeeping: Debris, floor obstructions, cords, construction materials, supplies, etc.	X		
Hazardous Energy: Electrical cables or panels, chemical/gas/drain lines, utilities, etc.	X		
Overhead obstructions: Tight working conditions, pipe racks, beams, etc.	X		

NOTE: If any item above requires maintenance or repair, notify your supervisor. At the end of your shift submit completed checklist to your supervisor.

Comments:

RUPERT PLUMBING AND HEATING LTD

GS 1930

SCISSOR LIFT INSPECTION CHECKLIST

Inspected by: Andrés Parras Z	Date: 10-27-16		
Pre-Operation Procedures	Pass	Fail	N/A
Check hydraulic hoses and fittings	X		
Check battery wiring and fluid level	X		
Check tires for proper inflation, gouges, and wear	X		
Main Frame and Scissors			
Check structure and scissors for corrosion, cracks, bends	X		
Check pivot pins and fasteners	X		
Control System			
Check for damage to switches, indicators, and guards	X		
Check terminals and plugs	X		
Check cords	X		
Manuals and Safety Decals			
ANSI Manual and Operator's Manual are in storage box	X		
Capacity, safety and instruction decals are legible	X		
Platform			
Rear closure and railing secure in pockets	X		
All fasteners secure and railing in good condition	X		
Function Tests			
Base and upper control box work properly	X		
Steering, driving and brakees operational	X		
Fast speed cut out when platform is elevated	X		
Platform raises to full extension	X		
Emergency down and stop	X		
Pothole system operational	X		
Workplace Inspection - Survey work area for potential hazardous operating conditions prior to lift usage. Ensure hazards identified are addressed.	Present	Not Present	N/A
Floor/ground conditions: Drop-offs, holes, uneven surfaces, slope floors, unstable ground, etc.	X		
Housekeeping: Debris, floor obstructions, cords, construction materials, supplies, etc.	X		
Hazardous Energy: Electrical cables or panels, chemical/gas/drain lines, utilities, etc.	X		
Overhead obstructions: Tight working conditions, pipe racks, beams, etc.	X		

NOTE: If any item above requires maintenance or repair, notify your supervisor. At the end of your shift submit completed checklist to your supervisor.

Comments:

RUPERT PLUMBING AND HEATING #2

GS R30

SCISSOR LIFT INSPECTION CHECKLIST

Inspected by: Andrew Barnes	Date: 10-28-16		
Pre-Operation Procedures	Pass	Fail	N/A
Check hydraulic hoses and fittings	X		
Check battery wiring and fluid level	X		
Check tires for proper inflation, gouges, and wear	X		
Main Frame and Scissors			
Check structure and scissors for corrosion, cracks, bends	X		
Check pivot pins and fasteners	X		
Control System			
Check for damage to switches, indicators, and guards	X		
Check terminals and plugs	X		
Check cords	X		
Manuals and Safety Decals			
ANSI Manual and Operator's Manual are in storage box	X		
Capacity, safety and instruction decals are legible	X		
Platform			
Rear closure and railing secure in pockets	X		
All fasteners secure and railing in good condition	X		
Function Tests			
Base and upper control box work properly	X		
Steering, driving and brakees operational	X		
Fast speed cut out when platform is elevated	X		
Platform raises to full extension	X		
Emergency down and stop	X		
Pothole system operational	X		
Workplace Inspection - Survey work area for potential hazardous operating conditions prior to lift usage. Ensure hazards identified are addressed.	Present	Not Present	N/A
Floor/ground conditions: Drop-offs, holes, uneven surfaces, slope floors, unstable ground, etc.	X		
Housekeeping: Debris, floor obstructions, cords, construction materials, supplies, etc.	X		
Hazardous Energy: Electrical cables or panels, chemical/gas/drain lines, utilities, etc.	X		
Overhead obstructions: Tight working conditions, pipe racks, beams, etc.	X		

NOTE: If any item above requires maintenance or repair, notify your supervisor. At the end of your shift submit completed checklist to your supervisor.

Comments:

RUPERT PLUMBING AND HEATING

GS 1980 #2

SCISSOR LIFT INSPECTION CHECKLIST

Inspected by: Andres Porras Jr	Date: 10-28-16		
Pre-Operation Procedures	Pass	Fail	N/A
Check hydraulic hoses and fittings	X		
Check battery wiring and fluid level	X		
Check tires for proper inflation, gouges, and wear	X		
Main Frame and Scissors			
Check structure and scissors for corrosion, cracks, bends	X		
Check pivot pins and fasteners	X		
Control System			
Check for damage to switches, indicators, and guards	X		
Check terminals and plugs	X		
Check cords	X		
Manuals and Safety Decals			
ANSI Manual and Operator's Manual are in storage box	X		
Capacity, safety and instruction decals are legible	X		
Platform			
Rear closure and railing secure in pockets	X		
All fasteners secure and railing in good condition	X		
Function Tests			
Base and upper control box work properly	X		
Steering, driving and brakees operational	X		
Fast speed cut out when platform is elevated	X		
Platform raises to full extension	X		
Emergency down and stop	X		
Pothole system operational	X		
Workplace Inspection - Survey work area for potential hazardous operating conditions prior to lift usage. Ensure hazards identified are addressed.	Present	Not Present	N/A
Floor/ground conditions: Drop-offs, holes, uneven surfaces, slope floors, unstable ground, etc.	X		
Housekeeping: Debris, floor obstructions, cords, construction materials, supplies, etc.	X		
Hazardous Energy: Electrical cables or panels, chemical/gas/drain lines, utilities, etc.	X		
Overhead obstructions: Tight working conditions, pipe racks, beams, etc.	X		

NOTE: If any item above requires maintenance or repair, notify your supervisor. At the end of your shift submit completed checklist to your supervisor.

Comments:

RUPERT PLUMBING AND HEATING

GS 1930 #1

SCISSOR LIFT INSPECTION CHECKLIST

Inspected by: Andres Porras Jr	Date: 10-31-16		
Pre-Operation Procedures	Pass	Fail	N/A
Check hydraulic hoses and fittings	X		
Check battery wiring and fluid level	X		
Check tires for proper inflation, gouges, and wear	X		
Main Frame and Scissors			
Check structure and scissors for corrosion, cracks, bends	X		
Check pivot pins and fasteners	X		
Control System			
Check for damage to switches, indicators, and guards	X		
Check terminals and plugs	X		
Check cords	X		
Manuals and Safety Decals			
ANSI Manual and Operator's Manual are in storage box	X		
Capacity, safety and instruction decals are legible	X		
Platform			
Rear closure and railing secure in pockets	X		
All fasteners secure and railing in good condition	X		
Function Tests			
Base and upper control box work properly	X		
Steering, driving and brakees operational	X		
Fast speed cut out when platform is elevated	X		
Platform raises to full extension	X		
Emergency down and stop	X		
Pothole system operational	X		
Workplace Inspection - Survey work area for potential hazardous operating conditions prior to lift usage. Ensure hazards identified are addressed.	Present	Not Present	N/A
Floor/ground conditions: Drop-offs, holes, uneven surfaces, slope floors, unstable ground, etc.	X		
Housekeeping: Debris, floor obstructions, cords, construction materials, supplies, etc.	X		
Hazardous Energy: Electrical cables or panels, chemical/gas/drain lines, utilities, etc.	X		
Overhead obstructions: Tight working conditions, pipe racks, beams, etc.	X		

NOTE: If any item above requires maintenance or repair, notify your supervisor. At the end of your shift submit completed checklist to your supervisor.

Comments:

RUPERT PLUMBING AND HEATING

GS 1930 #2

SCISSOR LIFT INSPECTION CHECKLIST

Inspected by: Andres Perez	Date: 10-31-16		
Pre-Operation Procedures	Pass	Fail	N/A
Check hydraulic hoses and fittings	X		
Check battery wiring and fluid level	X		
Check tires for proper inflation, gouges, and wear	X		
Main Frame and Scissors			
Check structure and scissors for corrosion, cracks, bends	X		
Check pivot pins and fasteners	X		
Control System			
Check for damage to switches, indicators, and guards	X		
Check terminals and plugs	X		
Check cords	X		
Manuals and Safety Decals			
ANSI Manual and Operator's Manual are in storage box	X		
Capacity, safety and instruction decals are legible	X		
Platform			
Rear closure and railing secure in pockets	X		
All fasteners secure and railing in good condition	X		
Function Tests			
Base and upper control box work properly	X		
Steering, driving and brakees operational	X		
Fast speed cut out when platform is elevated	X		
Platform raises to full extension	X		
Emergency down and stop	X		
Pothole system operational	X		
Workplace Inspection - Survey work area for potential hazardous operating conditions prior to lift usage. Ensure hazards identified are addressed.	Present	Not Present	N/A
Floor/ground conditions: Drop-offs, holes, uneven surfaces, slope floors, unstable ground, etc.	X		
Housekeeping: Debris, floor obstructions, cords, construction materials, supplies, etc.	X		
Hazardous Energy: Electrical cables or panels, chemical/gas/drain lines, utilities, etc.	X		
Overhead obstructions: Tight working conditions, pipe racks, beams, etc.	X		

NOTE: If any item above requires maintenance or repair, notify your supervisor. At the end of your shift submit completed checklist to your supervisor.

Comments:

RUPERT PLUMBING AND HEATING

4005 Snorkel

Boom
~~SCISSOR~~ LIFT INSPECTION CHECKLIST

Inspected by: Andrew Barnes 2	Date: 10-31-16		
Pre-Operation Procedures	Pass	Fail	N/A
Check hydraulic hoses and fittings	X		
Check battery wiring and fluid level	X		
Check tires for proper inflation, gouges, and wear	X		
Main Frame and Scissors			
Check structure and scissors for corrosion, cracks, bends	X		
Check pivot pins and fasteners	X		
Control System			
Check for damage to switches, indicators, and guards	X		
Check terminals and plugs	X		
Check cords	X		
Manuals and Safety Decals			
ANSI Manual and Operator's Manual are in storage box	X		
Capacity, safety and instruction decals are legible	X		
Platform			
Rear closure and railing secure in pockets	X		
All fasteners secure and railing in good condition	X		
Function Tests			
Base and upper control box work properly	X		
Steering, driving and brakees operational	X		
Fast speed cut out when platform is elevated	X		
Platform raises to full extension	X		
Emergency down and stop	X		
Pothole system operational	X		
Workplace Inspection - Survey work area for potential hazardous operating conditions prior to lift usage. Ensure hazards identified are addressed.	Present	Not Present	N/A
Floor/ground conditions: Drop-offs, holes, uneven surfaces, slope floors, unstable ground, etc.	X		
Housekeeping: Debris, floor obstructions, cords, construction materials, supplies, etc.	X		
Hazardous Energy: Electrical cables or panels, chemical/gas/drain lines, utilities, etc.	X		
Overhead obstructions: Tight working conditions, pipe racks, beams, etc.	X		

NOTE: If any item above requires maintenance or repair, notify your supervisor. At the end of your shift submit completed checklist to your supervisor.

Comments:

RUPERT PLUMBING AND HEATING #1

GS 1930

SCISSOR LIFT INSPECTION CHECKLIST

Inspected by: Andrus Parkins II	Date: 10-11-1-16		
Pre-Operation Procedures	Pass	Fail	N/A
Check hydraulic hoses and fittings	X		
Check battery wiring and fluid level	X		
Check tires for proper inflation, gouges, and wear	X		
Main Frame and Scissors			
Check structure and scissors for corrosion, cracks, bends	X		
Check pivot pins and fasteners	X		
Control System			
Check for damage to switches, indicators, and guards	X		
Check terminals and plugs	X		
Check cords	X		
Manuals and Safety Decals			
ANSI Manual and Operator's Manual are in storage box	X		
Capacity, safety and instruction decals are legible	X		
Platform			
Rear closure and railing secure in pockets	X		
All fasteners secure and railing in good condition	X		
Function Tests			
Base and upper control box work properly	X		
Steering, driving and brakees operational	X		
Fast speed cut out when platform is elevated	X		
Platform raises to full extension	X		
Emergency down and stop	X		
Pothole system operational	X		
Workplace Inspection - Survey work area for potential hazardous operating conditions prior to lift usage. Ensure hazards identified are addressed.	Present	Not Present	N/A
Floor/ground conditions: Drop-offs, holes, uneven surfaces, slope floors, unstable ground, etc.	X		
Housekeeping: Debris, floor obstructions, cords, construction materials, supplies, etc.	X		
Hazardous Energy: Electrical cables or panels, chemical/gas/drain lines, utilities, etc.	X		
Overhead obstructions: Tight working conditions, pipe racks, beams, etc.	X		

NOTE: If any item above requires maintenance or repair, notify your supervisor. At the end of your shift submit completed checklist to your supervisor.

Comments:

RUPERT PLUMBING AND HEATING

GS 1930 #2

SCISSOR LIFT INSPECTION CHECKLIST

Inspected by: Andres Porcayo Jr	Date: 11-1-16		
Pre-Operation Procedures	Pass	Fail	N/A
Check hydraulic hoses and fittings	X		
Check battery wiring and fluid level	X		
Check tires for proper inflation, gouges, and wear	X		
Main Frame and Scissors			
Check structure and scissors for corrosion, cracks, bends	X		
Check pivot pins and fasteners	X		
Control System			
Check for damage to switches, indicators, and guards	X		
Check terminals and plugs	X		
Check cords	X		
Manuals and Safety Decals			
ANSI Manual and Operator's Manual are in storage box	X		
Capacity, safety and instruction decals are legible	X		
Platform			
Rear closure and railing secure in pockets	X		
All fasteners secure and railing in good condition	X		
Function Tests			
Base and upper control box work properly	X		
Steering, driving and brakees operational	X		
Fast speed cut out when platform is elevated	X		
Platform raises to full extension	X		
Emergency down and stop	X		
Pothole system operational	X		
Workplace Inspection - Survey work area for potential hazardous operating conditions prior to lift usage. Ensure hazards identified are addressed.	Present	Not Present	N/A
Floor/ground conditions: Drop-offs, holes, uneven surfaces, slope floors, unstable ground, etc.	X		
Housekeeping: Debris, floor obstructions, cords, construction materials, supplies, etc.	X		
Hazardous Energy: Electrical cables or panels, chemical/gas/drain lines, utilities, etc.	X		
Overhead obstructions: Tight working conditions, pipe racks, beams, etc.	X		

NOTE: If any item above requires maintenance or repair, notify your supervisor. At the end of your shift submit completed checklist to your supervisor.

Comments:

RUPERT PLUMBING AND HEATING

400 S Snorkel

SCISSOR LIFT INSPECTION CHECKLIST

Inspected by: Andrus Porcus Jr	Date: 11-1-16		
Pre-Operation Procedures	Pass	Fail	N/A
Check hydraulic hoses and fittings	X		
Check battery wiring and fluid level	X		
Check tires for proper inflation, gouges, and wear	X		
Main Frame and Scissors			
Check structure and scissors for corrosion, cracks, bends	X		
Check pivot pins and fasteners	X		
Control System			
Check for damage to switches, indicators, and guards	X		
Check terminals and plugs	X		
Check cords	X		
Manuals and Safety Decals			
ANSI Manual and Operator's Manual are in storage box	X		
Capacity, safety and instruction decals are legible	X		
Platform			
Rear closure and railing secure in pockets	X		
All fasteners secure and railing in good condition	X		
Function Tests			
Base and upper control box work properly	X		
Steering, driving and brakees operational	X		
Fast speed cut out when platform is elevated	X		
Platform raises to full extension	X		
Emergency down and stop	X		
Pothole system operational	X		
Workplace Inspection - Survey work area for potential hazardous operating conditions prior to lift usage. Ensure hazards identified are addressed.	Present	Not Present	N/A
Floor/ground conditions: Drop-offs, holes, uneven surfaces, slope floors, unstable ground, etc.	X		
Housekeeping: Debris, floor obstructions, cords, construction materials, supplies, etc.	X		
Hazardous Energy: Electrical cables or panels, chemical/gas/drain lines, utilities, etc.	X		
Overhead obstructions: Tight working conditions, pipe racks, beams, etc.	X		

NOTE: If any item above requires maintenance or repair, notify your supervisor. At the end of your shift submit completed checklist to your supervisor.

Comments:

RUPERT PLUMBING AND HEATING

GS1930 #7

SCISSOR LIFT INSPECTION CHECKLIST

Inspected by: Andrus Parrus Jr	Date: 11-2-16		
Pre-Operation Procedures	Pass	Fail	N/A
Check hydraulic hoses and fittings	X		
Check battery wiring and fluid level	X		
Check tires for proper inflation, gouges, and wear	X		
Main Frame and Scissors			
Check structure and scissors for corrosion, cracks, bends	X		
Check pivot pins and fasteners	X		
Control System			
Check for damage to switches, indicators, and guards	X		
Check terminals and plugs	X		
Check cords	X		
Manuals and Safety Decals			
ANSI Manual and Operator's Manual are in storage box	X		
Capacity, safety and instruction decals are legible	X		
Platform			
Rear closure and railing secure in pockets	X		
All fasteners secure and railing in good condition	X		
Function Tests			
Base and upper control box work properly	X		
Steering, driving and brakees operational	X		
Fast speed cut out when platform is elevated	X		
Platform raises to full extension	X		
Emergency down and stop	X		
Pothole system operational	X		
Workplace Inspection - Survey work area for potential hazardous operating conditions prior to lift usage. Ensure hazards identified are addressed.	Present	Not Present	N/A
Floor/ground conditions: Drop-offs, holes, uneven surfaces, slope floors, unstable ground, etc.	X		
Housekeeping: Debris, floor obstructions, cords, construction materials, supplies, etc.	X		
Hazardous Energy: Electrical cables or panels, chemical/gas/drain lines, utilities, etc.	X		
Overhead obstructions: Tight working conditions, pipe racks, beams, etc.	X		

NOTE: If any item above requires maintenance or repair, notify your supervisor. At the end of your shift submit completed checklist to your supervisor.

Comments:

RUPERT PLUMBING AND HEATING #2

GS 1930

SCISSOR LIFT INSPECTION CHECKLIST

Inspected by: Andrew Bacon Jr	Date: 11-24-6		
Pre-Operation Procedures	Pass	Fail	N/A
Check hydraulic hoses and fittings	X		
Check battery wiring and fluid level	X		
Check tires for proper inflation, gouges, and wear	X		
Main Frame and Scissors			
Check structure and scissors for corrosion, cracks, bends	X		
Check pivot pins and fasteners	X		
Control System			
Check for damage to switches, indicators, and guards	X		
Check terminals and plugs	X		
Check cords	X		
Manuals and Safety Decals			
ANSI Manual and Operator's Manual are in storage box	X		
Capacity, safety and instruction decals are legible	X		
Platform			
Rear closure and railing secure in pockets	X		
All fasteners secure and railing in good condition	X		
Function Tests			
Base and upper control box work properly	X		
Steering, driving and brakees operational	X		
Fast speed cut out when platform is elevated	X		
Platform raises to full extension	X		
Emergency down and stop	X		
Pothole system operational	X		
Workplace Inspection - Survey work area for potential hazardous operating conditions prior to lift usage. Ensure hazards identified are addressed.	Present	Not Present	N/A
Floor/ground conditions: Drop-offs, holes, uneven surfaces, slope floors, unstable ground, etc.	X		
Housekeeping: Debris, floor obstructions, cords, construction materials, supplies, etc.	X		
Hazardous Energy: Electrical cables or panels, chemical/gas/drain lines, utilities, etc.	X		
Overhead obstructions: Tight working conditions, pipe racks, beams, etc.	X		

NOTE: If any item above requires maintenance or repair, notify your supervisor. At the end of your shift submit completed checklist to your supervisor.

Comments:

RUPERT PLUMBING AND HEATING

4005 SNORKEL

SCISSOR LIFT INSPECTION CHECKLIST

Inspected by: Andrew Porras	Date: 11-2-16		
Pre-Operation Procedures	Pass	Fail	N/A
Check hydraulic hoses and fittings	X		
Check battery wiring and fluid level	X		
Check tires for proper inflation, gouges, and wear	X		
Main Frame and Scissors			
Check structure and scissors for corrosion, cracks, bends	X		
Check pivot pins and fasteners	X		
Control System			
Check for damage to switches, indicators, and guards	X		
Check terminals and plugs	X		
Check cords	X		
Manuals and Safety Decals			
ANSI Manual and Operator's Manual are in storage box	X		
Capacity, safety and instruction decals are legible	X		
Platform			
Rear closure and railing secure in pockets	X		
All fasteners secure and railing in good condition	X		
Function Tests			
Base and upper control box work properly	X		
Steering, driving and brakees operational	X		
Fast speed cut out when platform is elevated	X		
Platform raises to full extension	X		
Emergency down and stop	X		
Pothole system operational	X		
Workplace Inspection - Survey work area for potential hazardous operating conditions prior to lift usage. Ensure hazards identified are addressed.	Present	Not Present	N/A
Floor/ground conditions: Drop-offs, holes, uneven surfaces, slope floors, unstable ground, etc.	X		
Housekeeping: Debris, floor obstructions, cords, construction materials, supplies, etc.	X		
Hazardous Energy: Electrical cables or panels, chemical/gas/drain lines, utilities, etc.	X		
Overhead obstructions: Tight working conditions, pipe racks, beams, etc.	X		

NOTE: If any item above requires maintenance or repair, notify your supervisor. At the end of your shift submit completed checklist to your supervisor.

Comments:

RUPERT PLUMBING AND HEATING #2

GS 1930

SCISSOR LIFT INSPECTION CHECKLIST

Inspected by: Andrew Parker J	Date: 11-3-16		
Pre-Operation Procedures	Pass	Fail	N/A
Check hydraulic hoses and fittings	X		
Check battery wiring and fluid level	X		
Check tires for proper inflation, gouges, and wear	X		
Main Frame and Scissors			
Check structure and scissors for corrosion, cracks, bends	X		
Check pivot pins and fasteners	X		
Control System			
Check for damage to switches, indicators, and guards	X		
Check terminals and plugs	X		
Check cords	X		
Manuals and Safety Decals			
ANSI Manual and Operator's Manual are in storage box	X		
Capacity, safety and instruction decals are legible	X		
Platform			
Rear closure and railing secure in pockets	X		
All fasteners secure and railing in good condition	X		
Function Tests			
Base and upper control box work properly	X		
Steering, driving and brakees operational	X		
Fast speed cut out when platform is elevated	X		
Platform raises to full extension	X		
Emergency down and stop	X		
Pothole system operational	X		
Workplace Inspection - Survey work area for potential hazardous operating conditions prior to lift usage. Ensure hazards identified are addressed.	Present	Not Present	N/A
Floor/ground conditions: Drop-offs, holes, uneven surfaces, slope floors, unstable ground, etc.	X		
Housekeeping: Debris, floor obstructions, cords, construction materials, supplies, etc.	X		
Hazardous Energy: Electrical cables or panels, chemical/gas/drain lines, utilities, etc.	X		
Overhead obstructions: Tight working conditions, pipe racks, beams, etc.	X		

NOTE: If any item above requires maintenance or repair, notify your supervisor. At the end of your shift submit completed checklist to your supervisor.

Comments:

RUPERT PLUMBING AND HEATING #7

QS 1930

SCISSOR LIFT INSPECTION CHECKLIST

Inspected by:	Date:		
Pre-Operation Procedures	Pass	Fail	N/A
Check hydraulic hoses and fittings	X		
Check battery wiring and fluid level	X		
Check tires for proper inflation, gouges, and wear	X		
Main Frame and Scissors			
Check structure and scissors for corrosion, cracks, bends	X		
Check pivot pins and fasteners	X		
Control System	X		
Check for damage to switches, indicators, and guards	X		
Check terminals and plugs	X		
Check cords	X		
Manuals and Safety Decals			
ANSI Manual and Operator's Manual are in storage box	X		
Capacity, safety and instruction decals are legible	X		
Platform			
Rear closure and railing secure in pockets	X		
All fasteners secure and railing in good condition	X		
Function Tests			
Base and upper control box work properly	X		
Steering, driving and brakees operational	X		
Fast speed cut out when platform is elevated	X		
Platform raises to full extension	X		
Emergency down and stop	X		
Pothole system operational	X		
Workplace Inspection - Survey work area for potential hazardous operating conditions prior to lift usage. Ensure hazards identified are addressed.	Present	Not Present	N/A
Floor/ground conditions: Drop-offs, holes, uneven surfaces, slope floors, unstable ground, etc.	X		
Housekeeping: Debris, floor obstructions, cords, construction materials, supplies, etc.	X		
Hazardous Energy: Electrical cables or panels, chemical/gas/drain lines, utilities, etc.	X		
Overhead obstructions: Tight working conditions, pipe racks, beams, etc.	X		

NOTE: If any item above requires maintenance or repair, notify your supervisor. At the end of your shift submit completed checklist to your supervisor.

Comments:

RUPERT PLUMBING AND HEATING

4005 Manlift

SCISSOR LIFT INSPECTION CHECKLIST

Inspected by: Andrew Brown 2	Date: 11-3-16		
Pre-Operation Procedures	Pass	Fail	N/A
Check hydraulic hoses and fittings	X		
Check battery wiring and fluid level	X		
Check tires for proper inflation, gouges, and wear	X		
Main Frame and Scissors			
Check structure and scissors for corrosion, cracks, bends	X		
Check pivot pins and fasteners	X		
Control System			
Check for damage to switches, indicators, and guards	X		
Check terminals and plugs	X		
Check cords	X		
Manuals and Safety Decals			
ANSI Manual and Operator's Manual are in storage box	X		
Capacity, safety and instruction decals are legible	X		
Platform			
Rear closure and railing secure in pockets	X		
All fasteners secure and railing in good condition	X		
Function Tests			
Base and upper control box work properly	X		
Steering, driving and brakees operational	X		
Fast speed cut out when platform is elevated	X		
Platform raises to full extension	X		
Emergency down and stop	X		
Pothole system operational	X		
Workplace Inspection - Survey work area for potential hazardous operating conditions prior to lift usage. Ensure hazards identified are addressed.	Present	Not Present	N/A
Floor/ground conditions: Drop-offs, holes, uneven surfaces, slope floors, unstable ground, etc.	X		
Housekeeping: Debris, floor obstructions, cords, construction materials, supplies, etc.	X		
Hazardous Energy: Electrical cables or panels, chemical/gas/drain lines, utilities, etc.	X		
Overhead obstructions: Tight working conditions, pipe racks, beams, etc.	X		

NOTE: If any item above requires maintenance or repair, notify your supervisor. At the end of your shift submit completed checklist to your supervisor.

Comments:

RUPERT PLUMBING AND HEATING

4/00-5 Manlift

SCISSOR LIFT INSPECTION CHECKLIST

Inspected by: Elias Gallegos Sr	Date: 11-4-2016		
Pre-Operation Procedures	Pass	Fail	N/A
Check hydraulic hoses and fittings	X		
Check battery wiring and fluid level	X		
Check tires for proper inflation, gouges, and wear	X		
Main Frame and Scissors	X		
Check structure and scissors for corrosion, cracks, bends	X		
Check pivot pins and fasteners	X		
Control System			
Check for damage to switches, indicators, and guards	X		
Check terminals and plugs	X		
Check cords	X		
Manuals and Safety Decals			
ANSI Manual and Operator's Manual are in storage box	X		
Capacity, safety and instruction decals are legible	X		
Platform			
Rear closure and railing secure in pockets	X		
All fasteners secure and railing in good condition	X		
Function Tests			
Base and upper control box work properly	X		
Steering, driving and brakees operational	X		
Fast speed cut out when platform is elevated	X		
Platform raises to full extension	X		
Emergency down and stop	X		
Pothole system operational	X		
Workplace Inspection - Survey work area for potential hazardous operating conditions prior to lift usage. Ensure hazards identified are addressed.	Present	Not Present	N/A
Floor/ground conditions: Drop-offs, holes, uneven surfaces, slope floors, unstable ground, etc.	X		
Housekeeping: Debris, floor obstructions, cords, construction materials, supplies, etc.		X	
Hazardous Energy: Electrical cables or panels, chemical/gas/drain lines, utilities, etc.		X	
Overhead obstructions: Tight working conditions, pipe racks, beams, etc.	X		

NOTE: If any item above requires maintenance or repair, notify your supervisor. At the end of your shift submit completed checklist to your supervisor.

Comments:

RUPERT PLUMBING AND HEATING

4003 Mauldt

SCISSOR LIFT INSPECTION CHECKLIST

Inspected by: Andrew Peers	Date: 11-7-16		
Pre-Operation Procedures	Pass	Fail	N/A
Check hydraulic hoses and fittings	X		
Check battery wiring and fluid level	X		
Check tires for proper inflation, gouges, and wear	X		
Main Frame and Scissors			
Check structure and scissors for corrosion, cracks, bends	X		
Check pivot pins and fasteners	X		
Control System			
Check for damage to switches, indicators, and guards	X		
Check terminals and plugs	X		
Check cords	X		
Manuals and Safety Decals			
ANSI Manual and Operator's Manual are in storage box	X		
Capacity, safety and instruction decals are legible	X		
Platform			
Rear closure and railing secure in pockets	X		
All fasteners secure and railing in good condition	X		
Function Tests			
Base and upper control box work properly	X		
Steering, driving and brakees operational	X		
Fast speed cut out when platform is elevated	X		
Platform raises to full extension	X		
Emergency down and stop	X		
Pothole system operational	X		
Workplace Inspection - Survey work area for potential hazardous operating conditions prior to lift usage. Ensure hazards identified are addressed.	Present	Not Present	N/A
Floor/ground conditions: Drop-offs, holes, uneven surfaces, slope floors, unstable ground, etc.	X		
Housekeeping: Debris, floor obstructions, cords, construction materials, supplies, etc.	X		
Hazardous Energy: Electrical cables or panels, chemical/gas/drain lines, utilities, etc.	X		
Overhead obstructions: Tight working conditions, pipe racks, beams, etc.	X		

NOTE: If any item above requires maintenance or repair, notify your supervisor. At the end of your shift submit completed checklist to your supervisor.

Comments:

RUPERT PLUMBING AND HEATING

GSP30 #1

SCISSOR LIFT INSPECTION CHECKLIST

Inspected by: Andrew Parker	Date: 11-7-14		
Pre-Operation Procedures	Pass	Fail	N/A
Check hydraulic hoses and fittings	X		
Check battery wiring and fluid level	X		
Check tires for proper inflation, gouges, and wear	X		
Main Frame and Scissors			
Check structure and scissors for corrosion, cracks, bends	X		
Check pivot pins and fasteners	X		
Control System			
Check for damage to switches, indicators, and guards	X		
Check terminals and plugs	X		
Check cords	X		
Manuals and Safety Decals			
ANSI Manual and Operator's Manual are in storage box	X		
Capacity, safety and instruction decals are legible	X		
Platform			
Rear closure and railing secure in pockets	X		
All fasteners secure and railing in good condition	X		
Function Tests			
Base and upper control box work properly	X		
Steering, driving and brakees operational	X		
Fast speed cut out when platform is elevated	X		
Platform raises to full extension	X		
Emergency down and stop	X		
Pothole system operational	X		
Workplace Inspection - Survey work area for potential hazardous operating conditions prior to lift usage. Ensure hazards identified are addressed.	Present	Not Present	N/A
Floor/ground conditions: Drop-offs, holes, uneven surfaces, slope floors, unstable ground, etc.	X		
Housekeeping: Debris, floor obstructions, cords, construction materials, supplies, etc.	X		
Hazardous Energy: Electrical cables or panels, chemical/gas/drain lines, utilities, etc.	X		
Overhead obstructions: Tight working conditions, pipe racks, beams, etc.	X		

NOTE: If any item above requires maintenance or repair, notify your supervisor. At the end of your shift submit completed checklist to your supervisor.

Comments:

RUPERT PLUMBING AND HEATING

GS 1930 #7

SCISSOR LIFT INSPECTION CHECKLIST

Inspected by: Andres Parra Jr	Date: 11-7-16		
Pre-Operation Procedures	Pass	Fail	N/A
Check hydraulic hoses and fittings	X		
Check battery wiring and fluid level	X		
Check tires for proper inflation, gouges, and wear	X		
Main Frame and Scissors			
Check structure and scissors for corrosion, cracks, bends	X		
Check pivot pins and fasteners	X		
Control System			
Check for damage to switches, indicators, and guards	X		
Check terminals and plugs	X		
Check cords	X		
Manuals and Safety Decals			
ANSI Manual and Operator's Manual are in storage box	X		
Capacity, safety and instruction decals are legible	X		
Platform			
Rear closure and railing secure in pockets	X		
All fasteners secure and railing in good condition	X		
Function Tests			
Base and upper control box work properly	X		
Steering, driving and brakees operational	X		
Fast speed cut out when platform is elevated	X		
Platform raises to full extension	X		
Emergency down and stop	X		
Pothole system operational	X		
Workplace Inspection - Survey work area for potential hazardous operating conditions prior to lift usage. Ensure hazards identified are addressed.	Present	Not Present	N/A
Floor/ground conditions: Drop-offs, holes, uneven surfaces, slope floors, unstable ground, etc.	X		
Housekeeping: Debris, floor obstructions, cords, construction materials, supplies, etc.	X		
Hazardous Energy: Electrical cables or panels, chemical/gas/drain lines, utilities, etc.	X		
Overhead obstructions: Tight working conditions, pipe racks, beams, etc.	X		

NOTE: If any item above requires maintenance or repair, notify your supervisor. At the end of your shift submit completed checklist to your supervisor.

Comments:

RUPERT PLUMBING AND HEATING

GS 1930 #1

SCISSOR LIFT INSPECTION CHECKLIST

Inspected by: Andreas Berry	Date: 11-8-16		
Pre-Operation Procedures	Pass	Fail	N/A
Check hydraulic hoses and fittings	X		
Check battery wiring and fluid level	X		
Check tires for proper inflation, gouges, and wear	X		
Main Frame and Scissors			
Check structure and scissors for corrosion, cracks, bends	X		
Check pivot pins and fasteners	X		
Control System			
Check for damage to switches, indicators, and guards	X		
Check terminals and plugs	X		
Check cords	X		
Manuals and Safety Decals			
ANSI Manual and Operator's Manual are in storage box	X		
Capacity, safety and instruction decals are legible	X		
Platform			
Rear closure and railing secure in pockets	X		
All fasteners secure and railing in good condition	X		
Function Tests			
Base and upper control box work properly	X		
Steering, driving and brakees operational	X		
Fast speed cut out when platform is elevated	X		
Platform raises to full extension	X		
Emergency down and stop	X		
Pothole system operational	X		
Workplace Inspection - Survey work area for potential hazardous operating conditions prior to lift usage. Ensure hazards identified are addressed.	Present	Not Present	N/A
Floor/ground conditions: Drop-offs, holes, uneven surfaces, slope floors, unstable ground, etc.	X		
Housekeeping: Debris, floor obstructions, cords, construction materials, supplies, etc.	X		
Hazardous Energy: Electrical cables or panels, chemical/gas/drain lines, utilities, etc.	X		
Overhead obstructions: Tight working conditions, pipe racks, beams, etc.	X		

NOTE: If any item above requires maintenance or repair, notify your supervisor. At the end of your shift submit completed checklist to your supervisor.

Comments:

RUPERT PLUMBING AND HEATING

GS 1930 #2

SCISSOR LIFT INSPECTION CHECKLIST

Inspected by: Andrew Toews 2	Date: 11-8-16		
Pre-Operation Procedures	Pass	Fail	N/A
Check hydraulic hoses and fittings	X		
Check battery wiring and fluid level	X		
Check tires for proper inflation, gouges, and wear	X		
Main Frame and Scissors			
Check structure and scissors for corrosion, cracks, bends	X		
Check pivot pins and fasteners	X		
Control System			
Check for damage to switches, indicators, and guards	X		
Check terminals and plugs	X		
Check cords	X		
Manuals and Safety Decals			
ANSI Manual and Operator's Manual are in storage box	X		
Capacity, safety and instruction decals are legible	X		
Platform			
Rear closure and railing secure in pockets	X		
All fasteners secure and railing in good condition	X		
Function Tests			
Base and upper control box work properly	X		
Steering, driving and brakees operational	X		
Fast speed cut out when platform is elevated	X		
Platform raises to full extension	X		
Emergency down and stop	X		
Pothole system operational	X		
Workplace Inspection - Survey work area for potential hazardous operating conditions prior to lift usage. Ensure hazards identified are addressed.	Present	Not Present	N/A
Floor/ground conditions: Drop-offs, holes, uneven surfaces, slope floors, unstable ground, etc.	X		
Housekeeping: Debris, floor obstructions, cords, construction materials, supplies, etc.	X		
Hazardous Energy: Electrical cables or panels, chemical/gas/drain lines, utilities, etc.	X		
Overhead obstructions: Tight working conditions, pipe racks, beams, etc.	X		

NOTE: If any item above requires maintenance or repair, notify your supervisor. At the end of your shift submit completed checklist to your supervisor.

Comments:

RUPERT PLUMBING AND HEATING

GS 1930 #2

SCISSOR LIFT INSPECTION CHECKLIST

Inspected by: Andros Powers	Date: 11-9-16		
Pre-Operation Procedures	Pass	Fail	N/A
Check hydraulic hoses and fittings	X		
Check battery wiring and fluid level	X		
Check tires for proper inflation, gouges, and wear	X		
Main Frame and Scissors			
Check structure and scissors for corrosion, cracks, bends	X		
Check pivot pins and fasteners	X		
Control System			
Check for damage to switches, indicators, and guards	X		
Check terminals and plugs	X		
Check cords	X		
Manuals and Safety Decals			
ANSI Manual and Operator's Manual are in storage box	X		
Capacity, safety and instruction decals are legible	X		
Platform			
Rear closure and railing secure in pockets	X		
All fasteners secure and railing in good condition	X		
Function Tests			
Base and upper control box work properly	X		
Steering, driving and brakees operational	X		
Fast speed cut out when platform is elevated	X		
Platform raises to full extension	X		
Emergency down and stop	X		
Pothole system operational	X		
Workplace Inspection - Survey work area for potential hazardous operating conditions prior to lift usage. Ensure hazards identified are addressed.	Present	Not Present	N/A
Floor/ground conditions: Drop-offs, holes, uneven surfaces, slope floors, unstable ground, etc.	X		
Housekeeping: Debris, floor obstructions, cords, construction materials, supplies, etc.	X		
Hazardous Energy: Electrical cables or panels, chemical/gas/drain lines, utilities, etc.	X		
Overhead obstructions: Tight working conditions, pipe racks, beams, etc.	X		

NOTE: If any item above requires maintenance or repair, notify your supervisor. At the end of your shift submit completed checklist to your supervisor.

Comments:

RUPERT PLUMBING AND HEATING

GS 1930 #2

SCISSOR LIFT INSPECTION CHECKLIST

Inspected by: Aaron Torres 2	Date: 11-9-16		
Pre-Operation Procedures	Pass	Fail	N/A
Check hydraulic hoses and fittings	X		
Check battery wiring and fluid level	X		
Check tires for proper inflation, gouges, and wear	X		
Main Frame and Scissors			
Check structure and scissors for corrosion, cracks, bends	X		
Check pivot pins and fasteners	X		
Control System			
Check for damage to switches, indicators, and guards	X		
Check terminals and plugs	X		
Check cords	X		
Manuals and Safety Decals			
ANSI Manual and Operator's Manual are in storage box	X		
Capacity, safety and instruction decals are legible	X		
Platform			
Rear closure and railing secure in pockets	X		
All fasteners secure and railing in good condition	X		
Function Tests			
Base and upper control box work properly	X		
Steering, driving and brakees operational	X		
Fast speed cut out when platform is elevated	X		
Platform raises to full extension	X		
Emergency down and stop	X		
Pothole system operational	X		
Workplace Inspection - Survey work area for potential hazardous operating conditions prior to lift usage. Ensure hazards identified are addressed.	Present	Not Present	N/A
Floor/ground conditions: Drop-offs, holes, uneven surfaces, slope floors, unstable ground, etc.	X		
Housekeeping: Debris, floor obstructions, cords, construction materials, supplies, etc.	X		
Hazardous Energy: Electrical cables or panels, chemical/gas/drain lines, utilities, etc.	X		
Overhead obstructions: Tight working conditions, pipe racks, beams, etc.	X		

NOTE: If any item above requires maintenance or repair, notify your supervisor. At the end of your shift submit completed checklist to your supervisor.

Comments:

RUPERT PLUMBING AND HEATING

GS 1930 #2

SCISSOR LIFT INSPECTION CHECKLIST

Inspected by: Mike Clifford	Date: 11/28/16		
Pre-Operation Procedures	Pass	Fail	N/A
Check hydraulic hoses and fittings	X		
Check battery wiring and fluid level	X		
Check tires for proper inflation, gouges, and wear	X		
Main Frame and Scissors			
Check structure and scissors for corrosion, cracks, bends	X		
Check pivot pins and fasteners	X		
Control System			
Check for damage to switches, indicators, and guards	X		
Check terminals and plugs	X		
Check cords	X		
Manuals and Safety Decals			
ANSI Manual and Operator's Manual are in storage box	X		
Capacity, safety and instruction decals are legible	X		
Platform			
Rear closure and railing secure in pockets	X		
All fasteners secure and railing in good condition	X		
Function Tests			
Base and upper control box work properly	X		
Steering, driving and brakees operational	X		
Fast speed cut out when platform is elevated	X		
Platform raises to full extension	X		
Emergency down and stop	X		
Pothole system operational	X		
Workplace Inspection - Survey work area for potential hazardous operating conditions prior to lift usage. Ensure hazards identified are addressed.	Present	Not Present	N/A
Floor/ground conditions: Drop-offs, holes, uneven surfaces, slope floors, unstable ground, etc.	X		
Housekeeping: Debris, floor obstructions, cords, construction materials, supplies, etc.	X		
Hazardous Energy: Electrical cables or panels, chemical/gas/drain lines, utilities, etc.	X		
Overhead obstructions: Tight working conditions, pipe racks, beams, etc.	X		
NOTE: If any item above requires maintenance or repair, notify your supervisor. At the end of your shift submit completed checklist to your supervisor.			
Comments:			

RUPERT PLUMBING AND HEATING

QS 1902

#7

SCISSOR LIFT INSPECTION CHECKLIST

Inspected by: Andres Porras Z	Date: 11-29-16		
Pre-Operation Procedures	Pass	Fail	N/A
Check hydraulic hoses and fittings	X		
Check battery wiring and fluid level	X		
Check tires for proper inflation, gouges, and wear	X		
Main Frame and Scissors			
Check structure and scissors for corrosion, cracks, bends	X		
Check pivot pins and fasteners	X		
Control System			
Check for damage to switches, indicators, and guards	X		
Check terminals and plugs	X		
Check cords	X		
Manuals and Safety Decals			
ANSI Manual and Operator's Manual are in storage box	X		
Capacity, safety and instruction decals are legible	X		
Platform			
Rear closure and railing secure in pockets	X		
All fasteners secure and railing in good condition	X		
Function Tests			
Base and upper control box work properly	X		
Steering, driving and brakees operational	X		
Fast speed cut out when platform is elevated	X		
Platform raises to full extension	X		
Emergency down and stop	X		
Pothole system operational	X		
Workplace Inspection - Survey work area for potential hazardous operating conditions prior to lift usage. Ensure hazards identified are addressed.	Present	Not Present	N/A
Floor/ground conditions: Drop-offs, holes, uneven surfaces, slope floors, unstable ground, etc.	X		
Housekeeping: Debris, floor obstructions, cords, construction materials, supplies, etc.	X		
Hazardous Energy: Electrical cables or panels, chemical/gas/drain lines, utilities, etc.	X		
Overhead obstructions: Tight working conditions, pipe racks, beams, etc.	X		

NOTE: If any item above requires maintenance or repair, notify your supervisor. At the end of your shift submit completed checklist to your supervisor.

Comments:

RUPERT PLUMBING AND HEATING

GS 1930 #1

SCISSOR LIFT INSPECTION CHECKLIST

Inspected by: Andrew Power	Date: 12-2-16		
Pre-Operation Procedures	Pass	Fail	N/A
Check hydraulic hoses and fittings	X		
Check battery wiring and fluid level	X		
Check tires for proper inflation, gouges, and wear	X		
Main Frame and Scissors			
Check structure and scissors for corrosion, cracks, bends	X		
Check pivot pins and fasteners	X		
Control System			
Check for damage to switches, indicators, and guards	X		
Check terminals and plugs	X		
Check cords			
Manuals and Safety Decals			
ANSI Manual and Operator's Manual are in storage box	X		
Capacity, safety and instruction decals are legible	X		
Platform			
Rear closure and railing secure in pockets	X		
All fasteners secure and railing in good condition	X		
Function Tests			
Base and upper control box work properly	X		
Steering, driving and brakees operational	X		
Fast speed cut out when platform is elevated	X		
Platform raises to full extension	X		
Emergency down and stop	X		
Pothole system operational	X		
Workplace Inspection - Survey work area for potential hazardous operating conditions prior to lift usage. Ensure hazards identified are addressed.	Present	Not Present	N/A
Floor/ground conditions: Drop-offs, holes, uneven surfaces, slope floors, unstable ground, etc.	X		
Housekeeping: Debris, floor obstructions, cords, construction materials, supplies, etc.	X		
Hazardous Energy: Electrical cables or panels, chemical/gas/drain lines, utilities, etc.	X		
Overhead obstructions: Tight working conditions, pipe racks, beams, etc.	X		

NOTE: If any item above requires maintenance or repair, notify your supervisor. At the end of your shift submit completed checklist to your supervisor.

Comments:

RUPERT PLUMBING AND HEATING #2

~~1930~~ GS 1930

SCISSOR LIFT INSPECTION CHECKLIST

Inspected by: Anders Forgens 2	Date: 12-2-16		
Pre-Operation Procedures	Pass	Fail	N/A
Check hydraulic hoses and fittings	✓		
Check battery wiring and fluid level	✓		
Check tires for proper inflation, gouges, and wear	✓		
Main Frame and Scissors			
Check structure and scissors for corrosion, cracks, bends	✓		
Check pivot pins and fasteners	✓		
Control System			
Check for damage to switches, indicators, and guards	✓		
Check terminals and plugs	✓		
Check cords	✓		
Manuals and Safety Decals			
ANSI Manual and Operator's Manual are in storage box	✓		
Capacity, safety and instruction decals are legible	✓		
Platform			
Rear closure and railing secure in pockets	✓		
All fasteners secure and railing in good condition	✓		
Function Tests			
Base and upper control box work properly	✓		
Steering, driving and brakees operational	✓		
Fast speed cut out when platform is elevated	✓		
Platform raises to full extension	✓		
Emergency down and stop	✓		
Pothole system operational	✓		
Workplace Inspection - Survey work area for potential hazardous operating conditions prior to lift usage. Ensure hazards identified are addressed.	Present	Not Present	N/A
Floor/ground conditions: Drop-offs, holes, uneven surfaces, slope floors, unstable ground, etc.	X		
Housekeeping: Debris, floor obstructions, cords, construction materials, supplies, etc.	X		
Hazardous Energy: Electrical cables or panels, chemical/gas/drain lines, utilities, etc.	X		
Overhead obstructions: Tight working conditions, pipe racks, beams, etc.	X		

NOTE: If any item above requires maintenance or repair, notify your supervisor. At the end of your shift submit completed checklist to your supervisor.

Comments:

RUPERT PLUMBING AND HEATING

GS 1930 #7

SCISSOR LIFT INSPECTION CHECKLIST

Inspected by: Andre Parent	Date: 12-16-16		
Pre-Operation Procedures	Pass	Fail	N/A
Check hydraulic hoses and fittings	X		
Check battery wiring and fluid level	X		
Check tires for proper inflation, gouges, and wear	X		
Main Frame and Scissors			
Check structure and scissors for corrosion, cracks, bends	X		
Check pivot pins and fasteners	X		
Control System			
Check for damage to switches, indicators, and guards	X		
Check terminals and plugs	X		
Check cords	X		
Manuals and Safety Decals			
ANSI Manual and Operator's Manual are in storage box	X		
Capacity, safety and instruction decals are legible	X		
Platform			
Rear closure and railing secure in pockets	X		
All fasteners secure and railing in good condition	X		
Function Tests			
Base and upper control box work properly	X		
Steering, driving and brakees operational	X		
Fast speed cut out when platform is elevated	X		
Platform raises to full extension	X		
Emergency down and stop	X		
Pothole system operational	X		
Workplace Inspection - Survey work area for potential hazardous operating conditions prior to lift usage. Ensure hazards identified are addressed.	Present	Not Present	N/A
Floor/ground conditions: Drop-offs, holes, uneven surfaces, slope floors, unstable ground, etc.	X		
Housekeeping: Debris, floor obstructions, cords, construction materials, supplies, etc.	X		
Hazardous Energy: Electrical cables or panels, chemical/gas/drain lines, utilities, etc.	X		
Overhead obstructions: Tight working conditions, pipe racks, beams, etc.	X		

NOTE: If any item above requires maintenance or repair, notify your supervisor. At the end of your shift submit completed checklist to your supervisor.

Comments:

RUPERT PLUMBING AND HEATING

GS1930 #2

SCISSOR LIFT INSPECTION CHECKLIST

Inspected by: Andrew Peers	Date: 12-6-10		
Pre-Operation Procedures	Pass	Fail	N/A
Check hydraulic hoses and fittings	X		
Check battery wiring and fluid level	X		
Check tires for proper inflation, gouges, and wear	X		
Main Frame and Scissors			
Check structure and scissors for corrosion, cracks, bends	X		
Check pivot pins and fasteners	X		
Control System			
Check for damage to switches, indicators, and guards	X		
Check terminals and plugs	X		
Check cords	X		
Manuals and Safety Decals			
ANSI Manual and Operator's Manual are in storage box	X		
Capacity, safety and instruction decals are legible	X		
Platform			
Rear closure and railing secure in pockets	X		
All fasteners secure and railing in good condition	X		
Function Tests			
Base and upper control box work properly	X		
Steering, driving and brakees operational	X		
Fast speed cut out when platform is elevated	X		
Platform raises to full extension	X		
Emergency down and stop	X		
Pothole system operational	X		
Workplace Inspection - Survey work area for potential hazardous operating conditions prior to lift usage. Ensure hazards identified are addressed.	Present	Not Present	N/A
Floor/ground conditions: Drop-offs, holes, uneven surfaces, slope floors, unstable ground, etc.	X		
Housekeeping: Debris, floor obstructions, cords, construction materials, supplies, etc.	X		
Hazardous Energy: Electrical cables or panels, chemical/gas/drain lines, utilities, etc.	X		
Overhead obstructions: Tight working conditions, pipe racks, beams, etc.	X		

NOTE: If any item above requires maintenance or repair, notify your supervisor. At the end of your shift submit completed checklist to your supervisor.

Comments:

RUPERT PLUMBING AND HEATING

GS1930 #1

SCISSOR LIFT INSPECTION CHECKLIST

Inspected by: Andrew Porter Jr		Date: 12-7-16	
Pre-Operation Procedures	Pass	Fail	N/A
Check hydraulic hoses and fittings	X		
Check battery wiring and fluid level	X		
Check tires for proper inflation, gouges, and wear	X		
Main Frame and Scissors			
Check structure and scissors for corrosion, cracks, bends	X		
Check pivot pins and fasteners	X		
Control System			
Check for damage to switches, indicators, and guards	X		
Check terminals and plugs	X		
Check cords	X		
Manuals and Safety Decals			
ANSI Manual and Operator's Manual are in storage box	X		
Capacity, safety and instruction decals are legible	X		
Platform			
Rear closure and railing secure in pockets	X		
All fasteners secure and railing in good condition	X		
Function Tests			
Base and upper control box work properly	X		
Steering, driving and brakees operational	X		
Fast speed cut out when platform is elevated	X		
Platform raises to full extension	X		
Emergency down and stop	X		
Pothole system operational	X		
Workplace Inspection - Survey work area for potential hazardous operating conditions prior to lift usage. Ensure hazards identified are addressed.	Present	Not Present	N/A
Floor/ground conditions: Drop-offs, holes, uneven surfaces, slope floors, unstable ground, etc.	X		
Housekeeping: Debris, floor obstructions, cords, construction materials, supplies, etc.	X		
Hazardous Energy: Electrical cables or panels, chemical/gas/drain lines, utilities, etc.	X		
Overhead obstructions: Tight working conditions, pipe racks, beams, etc.	X		

NOTE: If any item above requires maintenance or repair, notify your supervisor. At the end of your shift submit completed checklist to your supervisor.

Comments:

RUPERT PLUMBING AND HEATING

GS1930 #1

SCISSOR LIFT INSPECTION CHECKLIST

Inspected by: Andrew Parsons	Date: 12-8-16		
Pre-Operation Procedures	Pass	Fail	N/A
Check hydraulic hoses and fittings	✓		
Check battery wiring and fluid level	✓		
Check tires for proper inflation, gouges, and wear	✓		
Main Frame and Scissors			
Check structure and scissors for corrosion, cracks, bends	✓		
Check pivot pins and fasteners	✓		
Control System			
Check for damage to switches, indicators, and guards	✓		
Check terminals and plugs	✓		
Check cords	✓		
Manuals and Safety Decals			
ANSI Manual and Operator's Manual are in storage box	✓		
Capacity, safety and instruction decals are legible	✓		
Platform			
Rear closure and railing secure in pockets	✓		
All fasteners secure and railing in good condition	✓		
Function Tests			
Base and upper control box work properly	✓		
Steering, driving and brakees operational	✓		
Fast speed cut out when platform is elevated	✓		
Platform raises to full extension	✓		
Emergency down and stop	✓		
Pothole system operational	✓		
Workplace Inspection - Survey work area for potential hazardous operating conditions prior to lift usage. Ensure hazards identified are addressed.	Present	Not Present	N/A
Floor/ground conditions: Drop-offs, holes, uneven surfaces, slope floors, unstable ground, etc.	✓		
Housekeeping: Debris, floor obstructions, cords, construction materials, supplies, etc.	✓		
Hazardous Energy: Electrical cables or panels, chemical/gas/drain lines, utilities, etc.	✓		
Overhead obstructions: Tight working conditions, pipe racks, beams, etc.	✓		

NOTE: If any item above requires maintenance or repair, notify your supervisor. At the end of your shift submit completed checklist to your supervisor.

Comments:

RUPERT PLUMBING AND HEATING

SCISSOR LIFT INSPECTION CHECKLIST

Inspected by: Elias Gallegos Sr	Date: 12-12-2016		
Pre-Operation Procedures	Pass	Fail	N/A
Check hydraulic hoses and fittings	✓		
Check battery wiring and fluid level	✓		
Check tires for proper inflation, gouges, and wear	✓		
Main Frame and Scissors			
Check structure and scissors for corrosion, cracks, bends	✓		
Check pivot pins and fasteners	✓		
Control System			
Check for damage to switches, indicators, and guards	✓		
Check terminals and plugs	✓		
Check cords	✓		
Manuals and Safety Decals			
ANSI Manual and Operator's Manual are in storage box	✓		
Capacity, safety and instruction decals are legible	✓		
Platform			
Rear closure and railing secure in pockets	✓		
All fasteners secure and railing in good condition	✓		
Function Tests			
Base and upper control box work properly	✓		
Steering, driving and brakees operational	✓		
Fast speed cut out when platform is elevated	✓		
Platform raises to full extension	✓		
Emergency down and stop	✓		
Pothole system operational	✓		
Workplace Inspection - Survey work area for potential hazardous operating conditions prior to lift usage. Ensure hazards identified are addressed.	Present	Not Present	N/A
Floor/ground conditions: Drop-offs, holes, uneven surfaces, slope floors, unstable ground, etc.	✓		
Housekeeping: Debris, floor obstructions, cords, construction materials, supplies, etc.	✓		
Hazardous Energy: Electrical cables or panels, chemical/gas/drain lines, utilities, etc.	✓		
Overhead obstructions: Tight working conditions, pipe racks, beams, etc.	✓		
NOTE: If any item above requires maintenance or repair, notify your supervisor. At the end of your shift submit completed checklist to your supervisor.			
Comments:			

RUPERT PLUMBING AND HEATING

SCISSOR LIFT INSPECTION CHECKLIST

Inspected by: Thos Callagher Sr	Date: 12.16.2014		
Pre-Operation Procedures	Pass	Fail	N/A
Check hydraulic hoses and fittings	✓		
Check battery wiring and fluid level	✓		
Check tires for proper inflation, gouges, and wear	✓		
Main Frame and Scissors			
Check structure and scissors for corrosion, cracks, bends	✓		
Check pivot pins and fasteners	✓		
Control System			
Check for damage to switches, indicators, and guards	✓		
Check terminals and plugs	✓		
Check cords	✓		
Manuals and Safety Decals			
ANSI Manual and Operator's Manual are in storage box	✓		
Capacity, safety and instruction decals are legible	✓		
Platform			
Rear closure and railing secure in pockets	✓		
All fasteners secure and railing in good condition	✓		
Function Tests			
Base and upper control box work properly	✓		
Steering, driving and brakees operational	✓		
Fast speed cut out when platform is elevated	✓		
Platform raises to full extension	✓		
Emergency down and stop	✓		
Pothole system operational	✓		
Workplace Inspection - Survey work area for potential hazardous operating conditions prior to lift usage. Ensure hazards identified are addressed.	Present	Not Present	N/A
Floor/ground conditions: Drop-offs, holes, uneven surfaces, slope floors, unstable ground, etc.	✓		
Housekeeping: Debris, floor obstructions, cords, construction materials, supplies, etc.	✓		
Hazardous Energy: Electrical cables or panels, chemical/gas/drain lines, utilities, etc.	✓		
Overhead obstructions: Tight working conditions, pipe racks, beams, etc.	✓		
NOTE: If any item above requires maintenance or repair, notify your supervisor. At the end of your shift submit completed checklist to your supervisor.			
Comments:			

RUPERT PLUMBING AND HEATING

SCISSOR LIFT INSPECTION CHECKLIST

Inspected by: Andres Portnoy	Date: 1-6-17		
Pre-Operation Procedures	Pass	Fail	N/A
Check hydraulic hoses and fittings	X		
Check battery wiring and fluid level	X		
Check tires for proper inflation, gouges, and wear	X		
Main Frame and Scissors			
Check structure and scissors for corrosion, cracks, bends	X		
Check pivot pins and fasteners	X		
Control System			
Check for damage to switches, indicators, and guards	X		
Check terminals and plugs	X		
Check cords	X		
Manuals and Safety Decals			
ANSI Manual and Operator's Manual are in storage box	X		
Capacity, safety and instruction decals are legible	X		
Platform			
Rear closure and railing secure in pockets	X		
All fasteners secure and railing in good condition	X		
Function Tests			
Base and upper control box work properly	X		
Steering, driving and brakees operational	X		
Fast speed cut out when platform is elevated	X		
Platform raises to full extension	X		
Emergency down and stop	X		
Pothole system operational	X		
Workplace Inspection - Survey work area for potential hazardous operating conditions prior to lift usage. Ensure hazards identified are addressed.	Present	Not Present	N/A
Floor/ground conditions: Drop-offs, holes, uneven surfaces, slope floors, unstable ground, etc.	X		
Housekeeping: Debris, floor obstructions, cords, construction materials, supplies, etc.	X		
Hazardous Energy: Electrical cables or panels, chemical/gas/drain lines, utilities, etc.	X		
Overhead obstructions: Tight working conditions, pipe racks, beams, etc.	X		

NOTE: If any item above requires maintenance or repair, notify your supervisor. At the end of your shift submit completed checklist to your supervisor.

Comments:

RUPERT PLUMBING AND HEATING

1-12-17 GS-1930

SCISSOR LIFT INSPECTION CHECKLIST

Inspected by: Andrew Powers	Date: 1-12-17		
Pre-Operation Procedures	Pass	Fail	N/A
Check hydraulic hoses and fittings	X		
Check battery wiring and fluid level	X		
Check tires for proper inflation, gouges, and wear	X		
Main Frame and Scissors			
Check structure and scissors for corrosion, cracks, bends	X		
Check pivot pins and fasteners	X		
Control System			
Check for damage to switches, indicators, and guards	X		
Check terminals and plugs	X		
Check cords	X		
Manuals and Safety Decals			
ANSI Manual and Operator's Manual are in storage box	X		
Capacity, safety and instruction decals are legible	X		
Platform			
Rear closure and railing secure in pockets	X		
All fasteners secure and railing in good condition	X		
Function Tests			
Base and upper control box work properly	X		
Steering, driving and brakees operational	X		
Fast speed cut out when platform is elevated	X		
Platform raises to full extension	X		
Emergency down and stop	X		
Pothole system operational	X		
Workplace Inspection - Survey work area for potential hazardous operating conditions prior to lift usage. Ensure hazards identified are addressed.	**Present**	**Not Present**	**N/A**
Floor/ground conditions: Drop-offs, holes, uneven surfaces, slope floors, unstable ground, etc.	X		
Housekeeping: Debris, floor obstructions, cords, construction materials, supplies, etc.	X		
Hazardous Energy: Electrical cables or panels, chemical/gas/drain lines, utilities, etc.	X		
Overhead obstructions: Tight working conditions, pipe racks, beams, etc.	X		

NOTE: If any item above requires maintenance or repair, notify your supervisor. At the end of your shift submit completed checklist to your supervisor.

Comments:

RUPERT PLUMBING AND HEATING

4005

SCISSOR LIFT INSPECTION CHECKLIST

Inspected by: Andrew Berens 2	Date: 1-12-17		
Pre-Operation Procedures	Pass	Fail	N/A
Check hydraulic hoses and fittings	X		
Check battery wiring and fluid level	X		
Check tires for proper inflation, gouges, and wear	X		
Main Frame and Scissors			
Check structure and scissors for corrosion, cracks, bends	X		
Check pivot pins and fasteners	X		
Control System			
Check for damage to switches, indicators, and guards	X		
Check terminals and plugs	X		
Check cords	X		
Manuals and Safety Decals			
ANSI Manual and Operator's Manual are in storage box	X		
Capacity, safety and instruction decals are legible	X		
Platform			
Rear closure and railing secure in pockets	X		
All fasteners secure and railing in good condition	X		
Function Tests			
Base and upper control box work properly	X		
Steering, driving and brakees operational	X		
Fast speed cut out when platform is elevated	X		
Platform raises to full extension	X		
Emergency down and stop	X		
Pothole system operational	X		
Workplace Inspection - Survey work area for potential hazardous operating conditions prior to lift usage. Ensure hazards identified are addressed.	Present	Not Present	N/A
Floor/ground conditions: Drop-offs, holes, uneven surfaces, slope floors, unstable ground, etc.	X		
Housekeeping: Debris, floor obstructions, cords, construction materials, supplies, etc.	X		
Hazardous Energy: Electrical cables or panels, chemical/gas/drain lines, utilities, etc.	X		
Overhead obstructions: Tight working conditions, pipe racks, beams, etc.	X		

NOTE: If any item above requires maintenance or repair, notify your supervisor. At the end of your shift submit completed checklist to your supervisor.

Comments:

RUPERT PLUMBING AND HEATING

SCISSOR LIFT INSPECTION CHECKLIST

Inspected by: Mike Clifford	Date: 1/25/2017		
Pre-Operation Procedures	Pass	Fail	N/A
Check hydraulic hoses and fittings	✓		
Check battery wiring and fluid level	✓		
Check tires for proper inflation, gouges, and wear	✓		
Main Frame and Scissors			
Check structure and scissors for corrosion, cracks, bends	✓		
Check pivot pins and fasteners	✓		
Control System			
Check for damage to switches, indicators, and guards	✓		
Check terminals and plugs	✓		
Check cords	✓		
Manuals and Safety Decals			
ANSI Manual and Operator's Manual are in storage box	✓		
Capacity, safety and instruction decals are legible	✓		
Platform			
Rear closure and railing secure in pockets	✓		
All fasteners secure and railing in good condition	✓		
Function Tests			
Base and upper control box work properly	✓		
Steering, driving and brakees operational	✓		
Fast speed cut out when platform is elevated	✓		
Platform raises to full extension	✓		
Emergency down and stop	✓		
Pothole system operational	✓		
Workplace Inspection - Survey work area for potential hazardous operating conditions prior to lift usage. Ensure hazards identified are addressed.	**Present**	**Not Present**	**N/A**
Floor/ground conditions: Drop-offs, holes, uneven surfaces, slope floors, unstable ground, etc.	✓		
Housekeeping: Debris, floor obstructions, cords, construction materials, supplies, etc.	✓		
Hazardous Energy: Electrical cables or panels, chemical/gas/drain lines, utilities, etc.	✓		
Overhead obstructions: Tight working conditions, pipe racks, beams, etc.	✓		

NOTE: If any item above requires maintenance or repair, notify your supervisor. At the end of your shift submit completed checklist to your supervisor.

Comments:

USAF WELDING, CUTTING AND BRAZING PERMIT

(See instructions and checklist on reverse)

1. CONTROL NUMBER: 16-504

2. DATE PERMIT ISSUED: 19 OCT 16

3. TIME PERMIT ISSUED: 0847

4. EXPIRATION (Date and time): 31 OCT 16

5. ☐ AIRCRAFT TAIL NO. _____ ☐ INSIDE ☐ OUTSIDE

6. ☒ FACILITY NO. 19150 FLOOR NO.

7. ☐ OPEN AREA (Specify)

8. OPERATION TO BE PERFORMED

INSTALLATION OF PIPE SUPPORTS
Welding

9. ☒ FIRE WATCH IS REQUIRED DURING OPERATION AND 30 MINUTES THEREAFTER.

10. ☐ AN AFTER OPERATION INSPECTION IS REQUIRED.
CALL _____ AFTER COMPLETION OF OPERATION AND REMAIN UNTIL ARRIVAL OF FIRE INSPECTOR.

11. ☒ CALL 846-8069 UPON COMPLETION OF OPERATION.

12. SPECIAL PRECAUTIONS

Call 911 IN CASE of enyony
or 846-9111 from cell phone.

13. THE LOCATION WHERE THIS WORK IS TO BE DONE HAS BEEN EXAMINED. NECESSARY PRECAUTIONS TAKEN TO PROVIDE A FIRE SAFE ENVIRONMENT, AND PERMISSION IS GRANTED FOR THIS WORK.

SIGNATURE OF FIRE INSPECTOR ISSUING THE PERMIT

14. I AM FULLY QUALIFIED TO PERFORM THIS OPERATION AND UNDERSTAND MY RESPONSIBILITIES AS OUTLINED IN AFOSH STANDARD 127-5.

SIGNATURE OF OPERATOR OR ON-SCENE SUPERVISOR

X

15. ☐ AN AFTER OPERATION INSPECTION HAS BEEN PERFORMED AND THE AREA IS DECLARED SAFE.

SIGNATURE OF FIRE INSPECTOR	DATE	TIME

16. ☐ OPERATOR/FIRE WATCH HAS DECLARED THE AREA SAFE.

NAME AND ORGANIZATION OF CALLER	DATE	TIME

AF FORM OCT 80 592

USAF WELDING, CUTTING AND BRAZING PERMIT (See instructions and checklist on reverse)		1. CONTROL NUMBER 2016-12
2. DATE PERMIT ISSUED 12 Oct 2016	3. TIME PERMIT ISSUED 14:00	4. EXPIRATION (Date and time) 30 NOV 2016 15:00
5. ☐ AIRCRAFT TAIL NO. _____		☒ INSIDE ☒ OUTSIDE
6. ☒ FACILITY NO. 1950		FLOOR NO.
7. ☐ OPEN AREA (Specify)		
8. OPERATION TO BE PERFORMED welding / cutting		
9. ☐ FIRE WATCH IS REQUIRED DURING OPERATION AND 30 MINUTES THEREAFTER.		
10. ☐ AN AFTER OPERATION INSPECTION IS REQUIRED. CALL _____ AFTER COMPLETION OF OPERATION AND REMAIN UNTIL ARRIVAL OF FIRE INSPECTOR.		
11. ☐ CALL _____ UPON COMPLETION OF OPERATION.		
12. SPECIAL PRECAUTIONS		
13. THE LOCATION WHERE THIS WORK IS TO BE DONE HAS BEEN EXAMINED. NECESSARY PRECAUTIONS TAKEN TO PROVIDE A FIRE SAFE ENVIRONMENT, AND PERMISSION IS GRANTED FOR THIS WORK.		
SIGNATURE OF FIRE INSPECTOR ISSUING THE PERMIT		
14. I AM FULLY QUALIFIED TO PERFORM THIS OPERATION AND UNDERSTAND MY RESPONSIBILITIES AS OUTLINED IN AFOSH STANDARD 127-5.		
SIGNATURE OF OPERATOR OR ON-SCENE SUPERVISOR		
15. ☐ AN AFTER OPERATION INSPECTION HAS BEEN PERFORMED AND THE AREA IS DECLARED SAFE.		
SIGNATURE OF FIRE INSPECTOR	DATE	TIME
16. ☐ OPERATOR/FIRE WATCH HAS DECLARED THE AREA SAFE.		
NAME AND ORGANIZATION OF CALLER	DATE	TIME

AF FORM OCT 80 592

APPENDIX B

Submittals

(Provided on compact disc)

- **Attachment 1: Engineer-Approved Submittals**
- **Attachment 2: Closeout Submittals**

ENGINEER-APPROVED SUBMITTALS

Status Date: 10-Oct-2016

SUBMITTAL LOG
KIRTLAND AFB BULK FUELS FACILITY - GROUNDWATER TREATMENT SYSTEM EXPANSION
CONTRACT NUMBER W912DR-12-D-0006 DM01

Submittal Tracking #	Spec. Section/ Doc.	Paragraph	Document Description/Title	Submittal Deadline	Submittal/ Resubmittal Date	Return Date	Status	Comments
1	Drawing P-001	NA	Steel Water Tanks	NA	2/11/16	2/17/16	Complete	Revise and Resubmit for Nozzle locations
1a	Drawing P-001	NA	Steel Water Tanks - REV 1	NA	4/5/2016	4/6/2016	Complete	
2	Drawing P-001	NA	GAC Vessels	NA	2/11/16	2/17/16	Complete	Revise and Resubmit, pressure drop concern
2a	Drawing P-001	NA	GAC Vessels - REV 1	NA	3/31/16	4/13/16	Complete	
3	Drawing P-001	NA	Bag Filter, Feed Pump, Discharge Pump Skids	NA	2/11/16	2/17/16	Complete	noted punp numbers should be updated
3a	Drawing P-001	NA	Bag Filter, Feed Pump, Discharge Pump Skids - REV 1	NA	4/7/16	4/7/16	Complete	revised for new pump sizes
4	40 05 13 Welding Process Piping	1.4.3	Welding Procedures and Certificates	NA	9/15/16	9/22/2016	Complete	
5	05 50 13 Miscellaneous Metal Fabrications; DWG 140405-001-CS-03-400009, 400010, 400011	NA	Pipe Supports	NA	9/15/16	9/22/2016	Complete	Revise and Resubmit for missing pipe support parts
5a	05 50 13 Miscellaneous Metal Fabrications; DWG 140405-001-CS-03-400009, 400010, 400011	NA	Pipe Supports - REV 1	NA	10/5/16	10/6/2016	Complete	
6	40 05 13 Pipelines, Liquid Process Piping	2.1	Pipe Fabrication	NA	9/15/16	9/23/2016	Complete	
7	40 05 13 Pipelines, Liquid Process Piping; Drawing P-101	NA	Pipe Shop Drawings	NA	9/15/16	9/23/2016	Complete	
8	09 90 00 Paints and Coatings	3.14.1, 3.14.2	Interior and Exterior Coatings	NA	10/4/16	10/6/16	Complete	
				--END OF LOG--				

TRANSMITTAL DOCUMENT

Date:	**4-5-16**	**From:**	**Ed Butler**
To:	**EA Engineering, Science, and Technology, Inc.,** **320 Gold Ave. SW, Suite 1300** **Albuquerque, NM 87102** **Devon Jercinovic**	**Job Name:**	**Kirtland AFB, NM** **Bulk Fuels Facility**
		Reference:	
		Transmittal Method:	**E-mail**
		Sent By:	**Ed Butler**

Submittal	Dwg. Number	Item Description
1 Rev. 1	14075-001-PI-03-400002	Feed Tank TK-210 and Treated Water Tank TK-216

Ed Butler
TECHSAS, Inc.
4819 West Bayshore Drive
Bacliff, TX 77518

"I hereby certify that the (equipment) (material) (article) shown and marked in this submittal is that proposed to be incorporated with the Contract, is in compliance with the contract drawings and specification, can be installed in the allocated spaces, and is submitted for Contractor approval.

Certified by _____.
(Signature when applicable) Date: _____.

Review Comments and Responses:

1. Height: 11’ on edge, 11’-10” at peak. Existing tank are listed as 12’ high in Drawings. Do they have more freeboard?

    a. BMT had built two (2) 6,000 Gal. Tank in Feb. of 2015. These tanks have a shell height of 11’-0”. The tanks BMT is building are of the same size with similar openings.

2. Freeboard: 0.8656’. Manufacturer’s design justifies this is adequate, but is it less than existing tanks.

    a. The tanks BMT is building are of the same size with similar openings.

3. Need one more 6” nozzle at 270º for discharge from TK-216 Treated Water Tank. 6” nozzle at 90º is not needed.

    Move the 6” spare nozzle (labeled SN08 on Sheet E02) from 90º to 270º. Keep the same 6” diameter and 1’-0” elevation.

    a. The current figures have been modified to match this configuration.

4. Does elevation of each level nozzle match existing tanks?

    a. The tanks BMT is building are of the same size with similar openings.

Kirtland Air Force Base
Albuquerque, New Mexico

Project: Bulk Fuels Facility

Feed and Treated Water Tank (Submittal 1 Revision 1)

Owner:	**Kirtland Air Force Base** **US Army Corps of Engineers**
Owner's Agent:	**EA Engineering, Science, and Technology, Inc.,** **320 Gold Ave. SW, Suite 1300** **Albuquerque, NM 87102**
Engineer:	**EA Engineering, Science, and Technology, Inc.,** **320 Gold Ave. SW, Suite 1300** **Albuquerque, NM 87102**
General Contractor:	**TECHSAS, Inc.** **4819 West Bayshore Drive** **Bacliff, TX 77518**
Construction Management:	**USA Environment, LP** **316 Georgia Ave** **Deer Park, TX 77536**

TABLE OF CONTENTS

Description:

- **Tank Design Drawing Package – Brown-Minneapolis Tank**
- **Tank Calculation Package – Brown-Minneapolis Tank**
- **Paint System – Brown-Minneapolis Tank**

BMT 20099

TANK CALCULATIONS

6,000 Gal. Water Storage Tanks
TK-210 and TK-216
(10.17´Dia. x 11´ Hgt.) AWWA D100-11
for
Mid Plume Pump & Treat System
Kirtland, AFB

PROJECT ENGINEER

CB & I

DESIGN ENGINEER

BMT C&E, Inc.

10.17´Dia. x 11´ Hgt. - FBSSCRT
6000 Gal. Water Tanks

Customer:
TECHSAS, Inc.
Job Number:
20099
Date: 01-05-2016 Rev.: 0

Standard Compliant Errors

Standard Compliant Errors

10.17´Dia. x 11´ Hgt. - FBSSCRT
6000 Gal. Water Tanks

Customer:
TECHSAS, Inc.
Job Number:
20099
Date: 01-05-2016 Rev.: 0

Comments

Comments
Shell
Joint efficiency for all shell courses = 85%. X-rays are required. Quantity of x-rays shall be per Sec. 11.5.
Roof
Roof is butt welded
Wind
Anchorage of the tank for wind is not required
Seismic
Tank is self-anchored
Available freeboard is adequate.
Tank is stable against sliding.
Anchor Bolt and Anchor Chair
Tank is not anchored

10.17´Dia. x 11´ Hgt. - FBSSCRT
6000 Gal. Water Tanks

Customer:
TECHSAS, Inc.
Job Number:
20099
Date: 01-05-2016 Rev.: 0

Design Data

Tank Diameter	10'- 2.0000" (Inside)
Tank Height	11'- 0.0000"
High Liquid Level	10'- 1.0000"
Normal Liquid Level	10'- 1.0000"
Low Liquid Level	0'- 0.0000"
Total Capacity	6,123 gallons
	146 barrels
Working Capacity	6,123 gallons
	146 barrels
Design Standard	AWWA D-100-11
Design Metal Temperature	25 °F
Operating Temperature	100 °F
Design Temperature	100 °F
Roof Live Load	20.00 psf
Roof Design Snow Load	25.00 psf
Additional Roof Loads	0.00 psf
Wind:	
Velocity	100 mph
Importance Factor	1.15
Exposure	C
Seismic:	
Site Class	D
Importance Factor	1.50
Use Group	III
Ss Value	47.00 %
S1 Value	14.00 %
Vertical Acceleration	0.00 g
Transitional Period (T_L)	6
Specific Gravity	1.000

Internal Pressure (Design)	Atmospheric
(Operating)	Atmospheric
External Pressure (Design)	Atmospheric
(Operating)	Atmospheric

Corrosion Allowance:

Bottom	0.0000 in
Shell Courses 1 - 1	0.0000 in
Courses 2 - 2	0.0000 in
Roof	0.0000 in
Compression Ring	0.0000 in

All Calculations are to be in the Corroded Condition

Customer:
TECHSAS, Inc.
Job Number:
20099
Date: 01-05-2016 Rev.: 0

Summary

Total Weight of Tank: 5,149 lbs
Total Operating Weight: 56,227 lbs
Total Testing Weight: 56,227 lbs

Bottom

Flat Bottom:
0.2500 in (A36) PL (weight: 884 lbs)

Outside projection = 2.0000 in

Tank bottom is butt welded.

Shell

Shell Course 01: 0.2500 in (A36) PL x 71.0000 in wide (weight: 1,929 lbs)

Shell Course 02: 0.2500 in (A36) PL x 59.0000 in wide (weight: 1,603 lbs)

Self-Supporting Cone Roof

0.1875 in (A36) PL (weight: 630 lbs)

Roof Slope: 2.0000 in 12 ø: 9.4623° Roof Rise: 0.8472 ft

Roof is butt welded

Compression Ring

L2 x2 x1/4 per Detail d (A36)
Weight: 102 lbs

2 inches Vertical leg of rim angle is butt welded to the top of the shell with the horizontal leg turned out

Customer:
TECHSAS, Inc.
Job Number:
20099
Date: 01-05-2016 Rev.: 0

Shell Nozzles

24"Dia. Shell Manway - I

24" API-650 Shell Manhole w/Blind Flange
Elevation: 18.0000 in
Orientation: 180.0000°

Nozzle Neck: Plate
Material Grade: A36
Wall Thickness: 0.2500 in

Flange Material:
A36

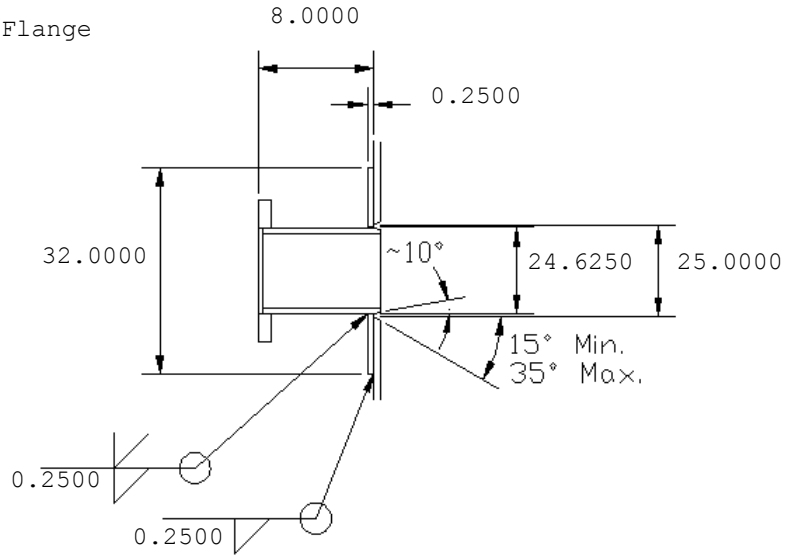

Reinforcing Pad Material:
A36

Flange Thickness: 0.5000 in
Machining Allowance: 0.1875 in

Blind Flange Material Grade: A36

Thickness: 0.3750 in

6" Discharge Nozzle - E

8" 150# SO Flanged Nozzle
Elevation: 12.0000 in
Orientation: 0.0000°

Nozzle Neck: SCH80 Pipe
Material Grade: A53-B
Wall Thickness: 0.5000 in

Flange Material:
A105

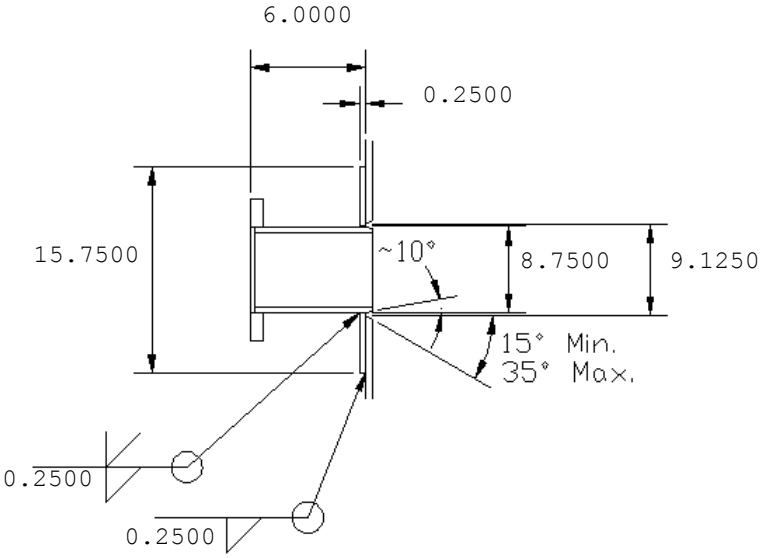

Reinforcing Pad Material:
A36

10.17´Dia. x 11´ Hgt. - FBSSCRT
6000 Gal. Water Tanks

Customer:
TECHSAS, Inc.
Job Number:
20099
Date: 01-05-2016 Rev.: 0

4" Level Nozzle - G

4" 150# SO Flanged Nozzle
Elevation: 100.0000 in
Orientation: 180.0000°

Nozzle Neck: SCH80 Pipe
Material Grade: A53-B
Wall Thickness: 0.3370 in

Flange Material:
A105

Reinforcing Pad Material:
A36

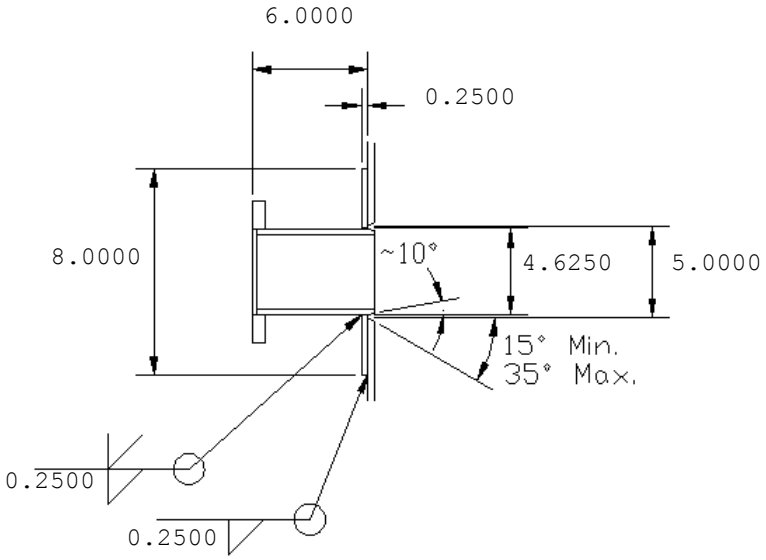

2" Drain Nozzle - F

2" 150# SO Flanged Nozzle
Elevation: 6.0000 in
Orientation: 120.0000°

Nozzle Neck: 160 Pipe
Material Grade: A53-B
Wall Thickness: 0.3430 in

Flange Material:
A105

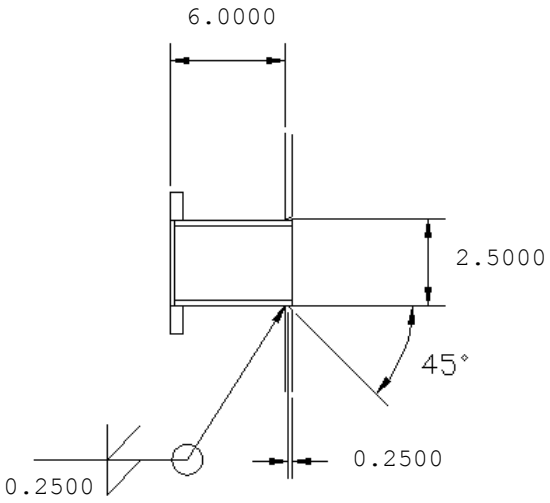

10.17´Dia. x 11´ Hgt. - FBSSCRT
6000 Gal. Water Tanks

Customer:
TECHSAS, Inc.
Job Number:
20099
Date: 01-05-2016 Rev.: 0

4" Level Nozzle - H

4" 150# SO Flanged Nozzle
Elevation: 25.0000 in
Orientation: 150.0000°

Nozzle Neck: SCH80 Pipe
Material Grade: A53-B
Wall Thickness: 0.3370 in

Flange Material:
A105

Reinforcing Pad Material:
A36

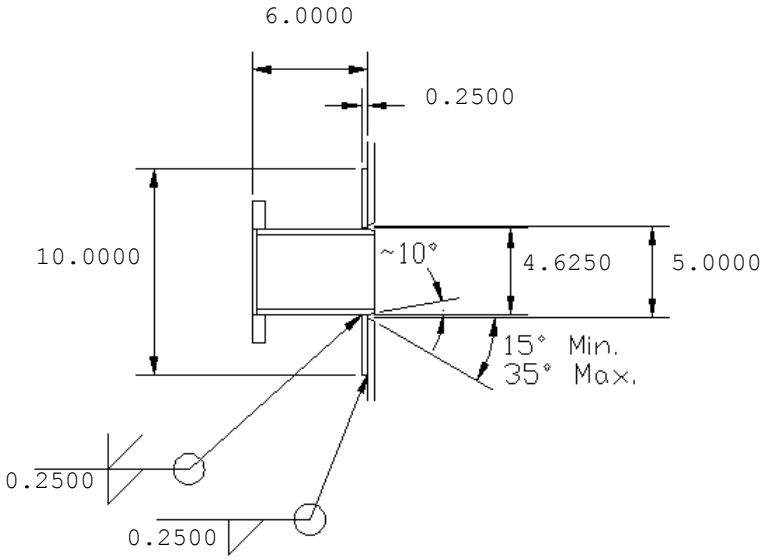

2" Level Nozzle - J

2" 150# SO Flanged Nozzle
Elevation: 25.0000 in
Orientation: 210.0000°

Nozzle Neck: 160 Pipe
Material Grade: A53-B
Wall Thickness: 0.3430 in

Flange Material:
A105

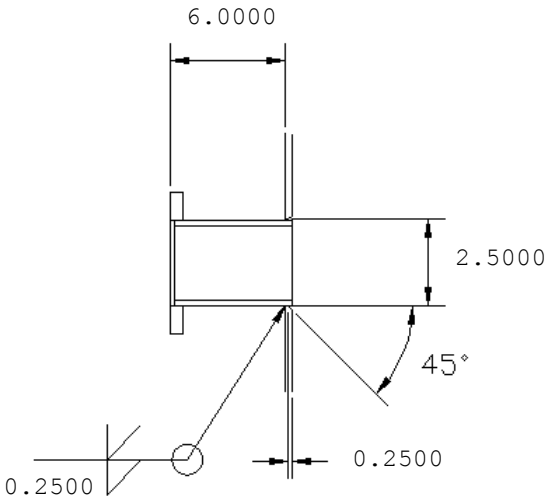

4" Spare Nozzle - K

4" 150# SO Flanged Nozzle
Elevation: 100.0000 in
Orientation: 240.0000°

Nozzle Neck: SCH80 Pipe
Material Grade: A53-B
Wall Thickness: 0.3370 in

Flange Material:
A105

Reinforcing Pad Material:
A36

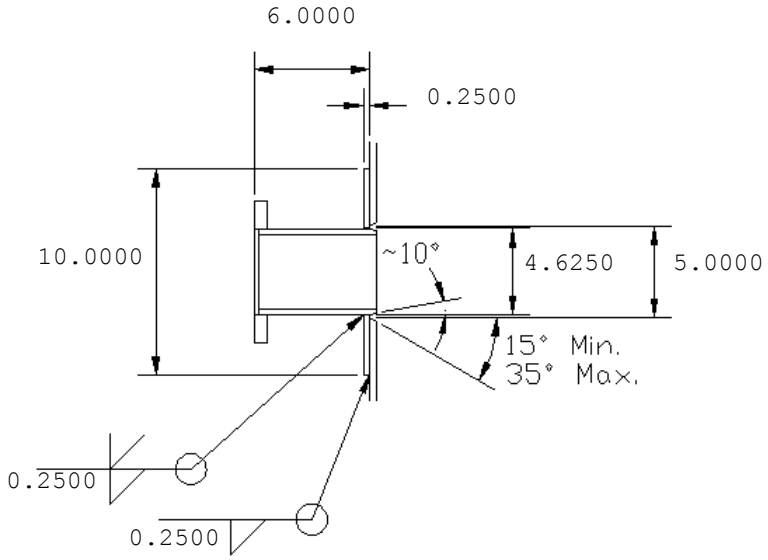

4" Spare Nozzle - L

4" 150# SO Flanged Nozzle
Elevation: 25.0000 in
Orientation: 240.0000°

Nozzle Neck: SCH80 Pipe
Material Grade: A53-B
Wall Thickness: 0.3370 in

Flange Material:
A105

Reinforcing Pad Material:
A36

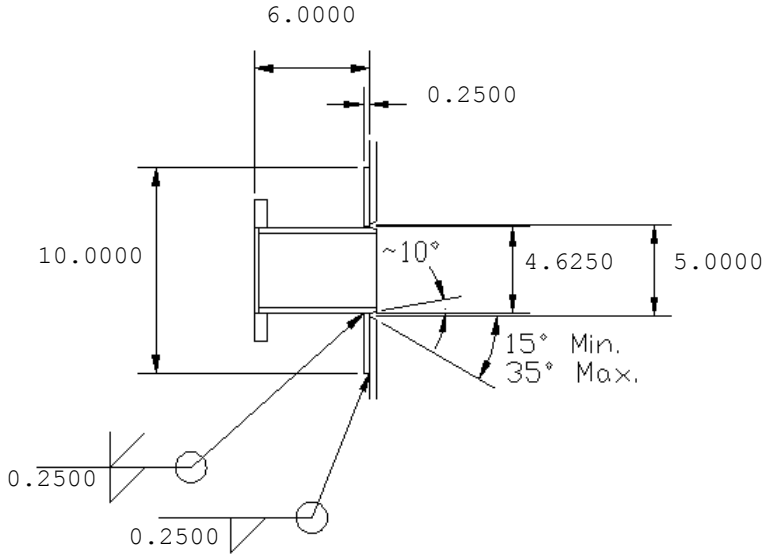

10.17´Dia. x 11´ Hgt. - FBSSCRT
6000 Gal. Water Tanks

Customer:
TECHSAS, Inc.
Job Number:
20099
Date: 01-05-2016 Rev.: 0

6" Spare Nozzle - M

6" 150# SO Flanged Nozzle
Elevation: 12.0000 in
Orientation: 90.0000°

Nozzle Neck: SCH80 Pipe
Material Grade: A53-B
Wall Thickness: 0.4320 in

Flange Material:
A105

Reinforcing Pad Material:
A36

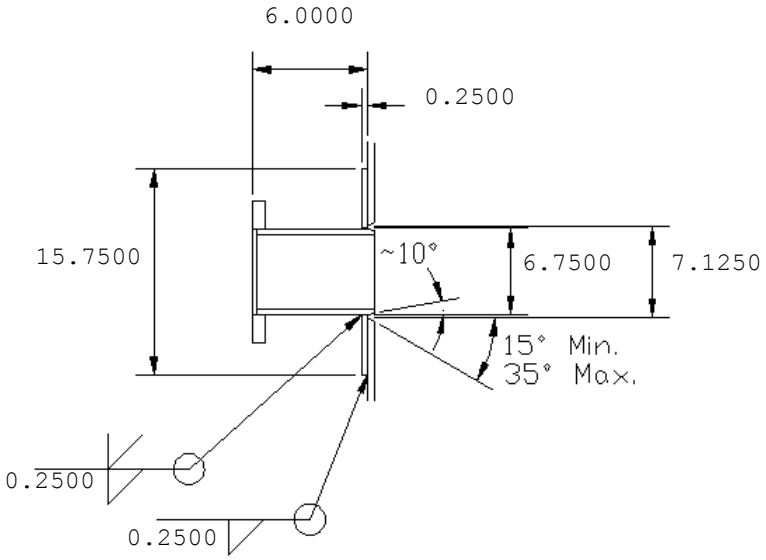

Bottom Design

Flat Bottom

Material Grade: A36
Thickness (t_b): 0.2500 in
Corrosion Allowance (CA): 0.0000 in

Minimum required outside projection = 1.0000 in

Actual outside projection (p) = 2.0000 in

Minimum thickness per Section 3.10 = 0.2500 in

Tank bottom is butt welded.

Customer:
TECHSAS, Inc.
Job Number:
20099
Date: 01-05-2016 Rev.: 0

Shell Design

Per Eq. 3-40

$$t = \frac{2.6\ hp\ D\ G}{sE} + CA$$

where
Diameter (D) = 10.1667 ft
Specific Gravity (G) = 1.000
Joint Efficiency (E) = 0.85

Shell Course 01

Material Grade:	A36	
Allowable Stress (s):		psi
Shell Height:	5.9167	ft
Corrosion Allowance (CA):	0.0000	in
Liquid Height (hp):	10.0833	ft

$$t = \frac{(2.6)(10.0833)(10.1667)(1.0000)}{(15000.0000)(0.8500)} + 0.0000 = 0.0209 \text{ in}$$

(Per Table 16 - min. t = 0.1875 in)
Actual t = 0.2500 in

Shell Course 02

Material Grade:	A36	
Allowable Stress (s):		psi
Shell Height:	4.9167	ft
Corrosion Allowance (CA):	0.0000	in
Liquid Height (hp):	4.1667	ft

$$t = \frac{(2.6)(4.1667)(10.1667)(1.0000)}{(15000.0000)(0.8500)} + 0.0000 = 0.0086 \text{ in}$$

(Per Table 16 - min. t = 0.1875 in)
Actual t = 0.2500 in

Customer:
TECHSAS, Inc.
Job Number:
20099
Date: 01-05-2016 Rev.: 0

Self-Supporting Cone Roof (Sec. 3.6.2)(per API-650)

Material Grade: A36
Roof Thickness (t_r): 0.1875 in
Corrosion Allowance (CA): 0.0000 in
Tank Diameter (D): 10.1667 ft

Roof is butt welded

Roof Slope: 2.0000 in 12
ø: 9.4623°
Roof Rise: 0.8472 ft

Live Load (L_v): 20.0000 lbf/ft²
Snow Load (S): 25.0000 lbf/ft²
Dead Load (D_L): 7.6575 lbf/ft²
Ext. Pressure (P_e): 0.0000 lbf/ft²

Per R.1(e)(1), $T = D_L + (L_v \text{ or } S) + 0.4P_e$ =
$7.6575 + 25.0000 + (0.4)(0.0000) = 32.6575$ lbf/ft²

Per R.1(e)(2), $T = D_L + 0.4(L_v \text{ or } S) + P_e$ =
$7.6575 + (0.4)(25.0000) + 0.0000 = 17.6575$ lbf/ft²

Use greater of (1) or (2), T = 32.6575 lbf/ft²

Minimum thickness per AWWA D-100 Section 3.10 =0.1792 in

Per 5.10.5.1:

$$t_r = \frac{D}{400.0000 \sin ø}\sqrt{\left\{\frac{T}{45.0000}\right\}} + CA =$$

$$\frac{10.1667}{400.0000 \sin(9.4623)}\sqrt{\left\{\frac{32.6575}{45.0000}\right\}} + 0.0000 = 0.1317 \text{ in}$$

Per 5.10.5.2:

$$A_r = \frac{D^2}{3000.0000 \sin ø}\left\{\frac{T}{45.0000}\right\} =$$

$$\frac{(10.1667)^2}{3000.0000 \sin(9.4623)}\left\{\frac{32.6575}{45.0000}\right\} = 0.1521 \text{ in}^2$$

Compression Ring

L2 x2 x1/4 per Detail d

2 inches Vertical leg of rim angle is butt welded to the top of the shell with the horizontal leg turned out

Material: A36

API-650 Figure F-2

R_c = 61.0000 in

Roof Angle (ø) = 9.4623°

$R_2 = R_c/(\sin ø) = 61.0000/(\sin 9.4623) = 371.0485$ in

t_h = 0.1875 in

$w_h = 0.3 \sqrt{(R_2 t_h)} = 0.3 \sqrt{(371.0485 * 0.1875)} = 2.5023$ in
not to exceed 12.0000 in
therefore w_h = 2.5023 in

Available area from roof $(A_r) = t_h w_h = 0.1875 * 2.5023 = 0.4692$ in²

t_c = 0.2500 in

$w_c = 0.6 \sqrt{(R_c t_c)} = 0.6 \sqrt{(61.0000 * 0.2500)} = 2.3431$ in

Distance from top of angle to top of shell (b) = 2.0000 in
Available area from shell $(A_s) = (w_c - b)t_c = (2.3431 - 2.0000) * 0.2500 = 0.0858$ in²

t_a = 0.2500 in
Horizontal projection of angle (a_1) = 1.7500 in
Maximum horizontal projection = $16t_a = 16 * 0.2500 = 4.0000$ in
therefore a_1 = 1.7500 in
Vertical projection of angle (a_2) = 2.0000 in
Maximum vertical projection = w_c = 2.3431 in
therefore a_2 = 2.0000 in
Available area from compression ring $(A_c) = (a_1 + a_2)t_a =$
$(1.7500 + 2.0000)0.2500 = 0.9375$ in²

Total available area $(A_t) = A_r + A_s + A_c = 0.4692 + 0.0858 + 0.9375 = 1.4924$ in²

10.17´Dia. x 11´ Hgt. - FBSSCRT 6000 Gal. Water Tanks	Customer: TECHSAS, Inc. Job Number: 20099 Date: 01-05-2016 Rev.: 0

Wind Calculations

Wind velocity (V) = 100 mph
Tank diameter (D) = 10.1667 ft
Tank height (H) = 11.0000 ft
Importance factor (I) = 1.15
Exposure C

Calculation are in the corroded condition

Calculate average shell thickness:

For each shell course, WT = W x T

(Shell courses are numbered from bottom to top)

Shell Course	W (ft)	Tactual (in)	WT
Angle	0.1667	0.2500	0.0417
2	4.9167	0.2500	1.2292
1	5.9167	0.2500	1.4792
Total:	11.0000		2.7500

Average thicknes (t) = WT/W = 2.7500/11.0000 = 0.2500 in

Determine Pw per 3.1.4

For Shell:
Centroid of shell C_s = 5.5000 ft
z = C_s but not less than 15.0000 ft
z = 15.00 ft from bottom of tank
Per ASCE7, zg = 900.0000 ft
α = 9.50
K_z = 2.01 (15.00/900.0000)^(2/9.50) = 0.8489
Per Eq. 3-2, $q_z = 0.00256 K_z I V^2$ = (0.00256)(0.8489)(1.1500)(100.0000)² = 24.9911 lbf/ft²
Per Table 2, C_f = 0.60
G = 1.00
Per Eq. 3-1, $P_w = q_z G C_f$ = (24.9911)(1.00)(0.6000) = 14.9947 lbf/ft²
but not less than 30.0000C_f = (30.00)(0.6000) = 18.0000 lbf/ft²
Therefore, P_{ws} = 18.0000 lbf/ft²

For roof:
Roof height H_r = 0.8472 ft
Centroid of roof $C_r = H + H_r/3 = 11.0000 + 0.8472/3 = 11.2824$ ft
$z = C_r$ but not less than 15.0000 ft
z = 15.00 ft from bottom of tank
Per ASCE7, z_g = 900.0000 ft
$\alpha = 9.50$
$K_z = 2.01\ (15.00/900.0000)^{(2/9.50)} = 0.8489$
Per Eq. 3-2, $q_z = 0.00256 K_z I V^2 = (0.00256)(0.8489)(1.1500)(100.0000)^2 = 24.9911$ lbf/ft²
Per Table 2, C_f = 0.60
G = 1.00
Per Eq. 3-1, $P_w = q_z G C_f = (24.9911)(1.00)(0.60) = 14.9947$ lbf/ft²
but not less than $30.0000 C_f = (30.00)(0.60) = 18.0000$ lbf/ft²
Therefore, P_{wr} = 18.0000 lbf/ft²

Overturning moment:
Roof exposed area, A_r = 4.3067 ft²
Overturning Moment (Mw) = $P_{ws} D H C_s + P_{wr} A_r C_r$ =
$= (18.0000)(10.1667)(11.0000)(5.5000) +$
$(18.0000)(4.3067)(11.2824) = 11946.1216$ ft-lbs

Check for tank stability without anchors:
Weight of shell and roof supported by shell (DL) = 4264.8724 lbs
MDL = DL * D/3 = 4264.8724 * 10.1667 / 3 = 14453.1787 ft-lbs

Anchorage of the tank for wind is not required

Determine if intermediate wind girder is required:

For distance 11.0000 ft from top of tank, average thickness (t) = 0.2500 in

Per Eq. 3-36: $h = \frac{10625000 t}{Paw (D/t)^{1.5}} =$

$\frac{(10625000)(0.2500)}{(18.0000)(10.1667/0.2500)^{1.5}} = 569.0345$ ft

h > H

Wind girder is not required. Iteration requirements of 3.5.2.1 have been met.

Customer:
TECHSAS, Inc.
Job Number:
20099
Date: 01-05-2016 Rev.: 0

Weights

	New (lbf)	Corroded (lbf)
Product:	51078.2212	51078.2212
Total Shell Plates:	3532.7777	3532.7777
Total Bottom Plates:	884.0854	884.0854
Total Roof Plates:	630.2076	630.2076
Total Live Load:	1623.5925	1623.5925
Total Snow Load:	2029.4907	2029.4907
Total Additional Dead Load:	0.0000	0.0000
Shell Insulation:	0.0000	0.0000
Roof Insulation:	0.0000	0.0000
Total Rafters:	0.0000	0.0000
Total Roof and Framing:	630.2076	630.2076
Total Shell Appurtenances:	0.0000	0.0000
Total Roof Appurtenances:	0.0000	0.0000
Total Roof Appurtenances acting on Shell	0.0000	0.0000
Live Load acting on Shell:	1623.5925	1623.5925
Snow Load acting on Shell:	2029.4907	2029.4907
Total of Roof acting on Shell:	630.2076	630.2076
Total of Roof Structural acting on Shell:	0.0000	0.0000
Total Compression Ring and Shell Stiffener	101.8871	101.8871

Seismic Calculations

Tank diameter (D): 10.1667 ft
Product Height (H): 10.0833 ft
Specific Gravity (G): 1.0000

Tank is self-anchored

Mapped spectral response acceleration (S_s): 0.4700 g
Mapped spectral response acceleration (S_1): 0.1400 g

Vertical earthquake acceleration coefficient (A_v): 0.0625 g

Site Class per Table 25 : D
Seismic Use Group per 13.2.1 : III

From Table 26, F_a = 1.4240
From Table 27, F_v = 2.2400
From Table 24, I_E = 1.5000
From Table 28, R_i = 2.5000
From Table 28, R_c = 1.5000

Scaling factor per 13.2.7.3, U = 2/3

Per Eq. 13-7, $S_{DS} = UF_aS_s = (2/3)(1.4240)(0.4700) = 0.4462$
Per Eq. 13-8, $S_{D1} = UF_vS_1 = (2/3)(2.2400)(0.1400) = 0.2091$

$g = 32.2000\ ft/s^2$

13.5.1 First Mode Sloshing Wave Period

Per Eq. 13-22: $T_c = 2\pi \sqrt{\frac{D}{\{3.68g \tanh\left(\frac{3.68H}{D}\right)\}}} =$

$$2\pi \sqrt{\frac{10.1667}{\{(3.68)(32.2000)\tanh\left(\frac{(3.68)(10.0833)}{10.1667}\right)\}}} = 1.8417$$

Per Eq. 13-9, $S_{ai} = S_{DS} = 0.4462$

Impulsive spectral acceleration parameter:

Per Eq. 13-17: $A_i = \frac{S_{ai} I_E}{1.4 R_i} = \frac{(0.4462)(1.50)}{1.4(2.5000)} = 0.1912$

and $A_i \geq \frac{0.36 S_1 I_E}{R_i} = \frac{0.36(0.1400)(1.50)}{2.5000} = 0.0302$

Therefore, $A_i = 0.1912$

Convective spectral acceleration parameter:

From Figure 19, $T_L = 6.0000$
Per 13.2.7.3.2, $K = 1.5$

$T_c \leq T_L$, Per Eq. 13-12

$S_{ac} = \frac{K S_{D1}}{T_c} = \frac{(1.5)(0.2091)}{1.8417} = 0.1703$

However, $S_{ac} \leq S_{DS}$
Therefore, $S_{ac} = 0.1703$

Per Eq. 13-18, $A_c = \frac{S_{ac} I_E}{1.4 R_c} = \frac{(0.1703)(1.5000)}{(1.4)(1.5000)} = 0.1216$

Per 13.5.2.2.1

D/H = 10.1667/10.0833 = 1.0083

Weights:
W_s = 3635 lbs
W_f = 884 lbs
W_r = Roof weight = 630 lbs
W_T = 51078 lbs

D/H < 1.333

Per Eq. 13-25, $W_i = (1.0 - 0.218 D/H) W_T = (1.0 - 0.218 * 1.0083)(51078) = 39851$ lbs

Per Eq. 13-26, $W_c = 0.230 D/H \tanh(3.67 H/D) W_T =$
$(0.230)(1.0083)[\tanh(3.67/1.0083)](51078) = 11829$ lbs

Per 13.5.3.1, Eq. 13-31

$$V_f = \sqrt{\{[A_i(W_s + W_r + W_f + W_i)]^2 + [A_c W_c]^2\}} = \sqrt{\{[(0.1912)(3635 + 630 + 884 + 39851)]^2 + [(0.1216)(11829)]^2\}} = 8724 \text{ lbs}$$

Per 13.5.2.2.2

$D/H < 1.333$

Per Eq. 13-29, $X_i = [0.5 - 0.094D/H]H = [0.5 - (0.094)(1.0083)](10.0833) = 4.0860$ ft

Per Eq. 13-30, $$X_c = \left[1.0 - \frac{\cosh(3.67H/D) - 1}{3.67H/D \sinh(3.67H/D)} \right] H =$$

$$\left[1.0 - \frac{\cosh(3.67/1.0083) - 1}{(3.67/1.0083)\sinh(3.67/1.0083)} \right] (10.0833) = 7.4549 \text{ ft}$$

Per 13.5.3.2.2

$D/H < 1.333$

Per Eq. 13-34, $X_{imf} = [0.500 + 0.600D/H]H = [0.500 + (0.060)(1.0083)](10.0833) = 5.6517$ ft

Per Eq. 13-35, $$X_{cmf} = \left[1.0 - \frac{\cosh(3.67H/D) - 1.937}{3.67H/D \sinh(3.67H/D)} \right] H =$$

$$\left[1.0 - \frac{\cosh(3.67/1.0083) - 1.937}{(3.67/1.0083)\sinh(3.67/1.0083)} \right] (10.0833) = 7.5913 \text{ ft}$$

Per 13.5.2.1, Eq. 13-23

$$M_s = \sqrt{\{[A_i(W_i X_i + W_s X_s + W_r H_t)]^2 + [A_c(W_c X_c)]^2\}} = \sqrt{\{[0.1912(39851*4.0860 + 3635*5.1897 + 630*11.0000)]^2 + [0.1216(11829*7.4549)]^2\}} = 37631 \text{ ft-lbs}$$

Per 13.5.2.2, Eq. 13-32

$$M_{mf} = \sqrt{\{[A_i(W_i X_{imf} + W_s X_s + W_r H_t)]^2 + [A_c(W_c X_{cmf})]^2\}} = \sqrt{\{[0.1912(39851*5.6517 + 3635*5.1897 + 630*11.0000)]^2 + [0.1216(11829*7.5913)]^2\}} = 49228 \text{ ft-lbs}$$

Self-anchored tank (new condition)

Per 13.5.4.2.1

W_s = 3635 lbs
w_{rs} = 19.7313 lbf/ft
t_b = 0.2500 in
t_s = 0.2500 in
$w_t = W_s/(\pi D) + w_{rs} = 3635/(\pi * 10.1667) + 19.7313 = 133.5296$ lbf/ft

Per Eq. 13-37,
$w_L = 7.9 t_b \sqrt{(F_y HG)} =$
$(7.9)(0.2500)\sqrt{[(36000.0000)(10.0833)(1.0000)]} = 1189.9273$ lbf/ft
$\leq 1.28HDG = (1.28)(10.0833)(10.1667)(1.0000) = 131.2178$ lbf/ft
therefore, $w_L = 131.2178$ lbf/ft

$$J \text{ per Eq. 13-36} = \frac{M_s}{D^2[w_t(1.0 - 0.4A_v) + w_L]} =$$

$$\frac{37631}{(10.1667)^2[133.5296(1.0 - (0.4)(0.0625)) + 131.2178]} = 1.393$$

Shell compression per Eq. 13-40 where J > 0.785

$$\sigma_c = \left[\frac{w_t(1 + 0.4A_v) + w_L}{0.607 - 0.18667(J)^{2.3}} - w_L \right] \frac{1}{12t_s} =$$

$$\left[\frac{133.5296(1 + (0.4)(0.0625)) + 131.2178}{0.607 - 0.18667(1.39)^{2.3}} - 131.2178 \right] \frac{1}{(12)(0.2500)}$$

$$= 387.7550 \text{ psi}$$

Allowable Compression Stresses in Shell per 13.5.4.2.4

$R = 12D/2 = 12 * 10.1667/2 = 61.0000$ in
$(t/R)_c$ for Material Class 2 = 0.0035372 (per 3.4.3.1)

For new condition:
$t/R = 0.2500/61.0000 = 0.0041$

$(t/R)c < t/R \leq 0.125$
Per Eq. 3-13, $F_L = 6925.00 + 886000(t/R)^2 =$
$6925.00 + 886000(0.0041)^2 = 10556.1475$ psi

$P = 0.4330HG = (0.4330)(10.0833)(1.0000) = 4.3661$ psi
$E = 29000000$ psi

$(P/E)(R/t)^2 = (4.3661/29000000)(61.0000/0.2500)^2 = 0.0090$

For $(P/E)(R/t)^2 \leq 0.064$ per Eq. 13-50
$\Delta Cc = 0.72[(P/E)(R/t)^2]^{0.84}$
$= 0.72[(0.0090)^2]^{0.84} = 0.0137$

Per Eq. 13-49
$\Delta\sigma_{cr} = \Delta C_c E t/R = (0.0137)(29000000)(0.2500)/61.0000 = 1630.8670$

Per Eq. 13-47
$\sigma_e = 1.333(\sigma_a + \Delta\sigma_{cr}/2) =$
$1.333(10556.1475 + 1630.8670/2) = 15158.3176$ psi

Freeboard requirements per 13.5.4.4

For $T_c \leq T_L$ per Eq. 13-55
$A_f = KS_{D1}/T_c = (1.5)(0.2091)/1.8417 = 0.1703$

Per Eq. 13-52, Wave Height : $\delta_s = 0.5DA_f = (0.5)(10.1667)(0.1703) = 0.8656$ ft

Available freeboard is adequate.

Per Table 29, minimum freeboard $= 1.0\delta_s = (1.0)(0.8656) = 0.8656$ ft

Tank resistance to sliding per Eq. 13-57
$V_s = \tan 30(W_s + W_r + W_f + W_p)(1.0 - 0.4A_v) =$
$\tan 30(3635 + 630 + 884 + 51078)(1.0 - 0.4 * 0.0625) = 31652$ lbs
$V_f = 8724$ lbs

Tank is stable against sliding.

Hoop Stress per 13.5.4.2.3

G = 1.00
D = 10.1667 ft
H = 10.0833 ft
A_i = 0.1912
A_c = 0.1216
A_v = 0.0625
D/H = 1.0083

Shell Course 01

Y = 10.0833 ft

For D/H < 1.333 and Y ≥ 0.75D, Eq. 13-45

$N_i = 1.39A_iGD^2 = (1.39)(0.1912)(1.00)(10.1667)^2 = 27.4734$ lbf/in

Eq. 13-46

$$N_c = \frac{0.98A_cGD^2\cosh[3.68(H - Y)/D]}{\cosh[3.68H/D]} =$$

$$\frac{(0.98)(0.1216)(1.0000)(10.1667)^2\cosh[3.68(10.0833 - 10.0833)/10.1667]}{\cosh[(3.68)(10.0833/10.1667)]}$$

$$= 0.6401 \text{ lbf/in}$$

$N_h = 2.60DYG = (2.60)(10.1667)(10.0833)(1.00) = 266.5361$ lbf/in

Shell thickness (t) = 0.2500 in

Per Eq. 13-42, $\sigma_s = [\sqrt{\{N_i^2 + N_c^2 + (A_vN_h)^2\}}]/(t) =$
$[\sqrt{\{(27.4734)^2 + (0.6401)^2 + (0.0625 * 266.5361)^2\}}]/(0.2500)$
$= 128.5240$ psi

$\sigma_T = N_h/t + \sigma_s = 266.5361/(0.2500) + 128.5240 = 1194.6684$ psi

Allowable stress = 1.333SE = (1.333)(15000.0000)(0.8500) = 16995.7500 psi

Minimum required thickness = $(\sigma_T * t)/Sa =$
$(1194.6684 * 0.2500)/16995.7500 = 0.0176$ in

Shell Course 02

Y = 4.1667 ft

For D/H < 1.333 and Y < 0.75D, Eq. 13-44

$$N_i = 2.77 A_i G D^2 \left[\frac{Y}{0.75D} - 0.5 \left(\frac{Y}{0.75D} \right)^2 \right] =$$

$$(2.77)(0.1912)(1.00)(10.1667)^2 \left[\frac{4.1667}{(0.75)(10.1667)} - 0.5 \left(\frac{4.1667}{(0.75)(10.1667)} \right)^2 \right]$$

$$= 21.7433 \text{ lbf/in}$$

Eq. 13-46

$$N_c = \frac{0.98 A_c G D^2 \cosh[3.68(H - Y)/D]}{\cosh[3.68H/D]} =$$

$$\frac{(0.98)(0.1216)(1.0000)(10.1667)^2 \cosh[3.68(10.0833 - 4.1667)/10.1667]}{\cosh[(3.68)(10.0833/10.1667)]}$$

$$= 2.7623 \text{ lbf/in}$$

$N_h = 2.60DYG = (2.60)(10.1667)(4.1667)(1.00) = 110.1389$ lbf/in

Shell thickness (t) = 0.2500 in

Per Eq. 13-42, $\sigma_s = [\sqrt{\{N_i^2 + N_c^2 + (A_v N_h)^2\}}]/(t) =$
$[\sqrt{\{(21.7433)^2 + (2.7623)^2 + (0.0625 * 110.1389)^2\}}]/(0.2500)$
$= 91.8901$ psi

$\sigma_T = N_h/t + \sigma_s = 110.1389/(0.2500) + 91.8901 = 532.4457$ psi

Allowable stress = 1.333SE = (1.333)(15000.0000)(0.8500) = 16995.7500 psi

Minimum required thickness = $(\sigma_T * t)/Sa =$
$(532.4457 * 0.2500)/16995.7500 = 0.0078$ in

Shell Nozzles

2" Drain Nozzle - F

Description: 2" 150# SO Flanged Nozzle
Elevation: 6.0000 in
Orientation: 120.0000°
Corrosion Allowance: Cn = 0.0000 in

Nozzle Neck: 160 Pipe
Material Grade: A53-B
Outside Diameter: d = 2.3750 in
Wall Thickness: t_n = 0.3430 in
Outside Projection: Po = 6.0000 in
Inside Projection: Pi = 0.0000 in

Flange Material Grade: A105

Calculate Required Shell Thickness at Nozzle

For Design: tr = 2.6000 * (9.5833 + 0.0000) * 10.1667 * 1.0000/[0.8500 * 15000.0000]
= 0.0199 in

Hoop Stress at Nozzle

Y = 9.5833 ft

D/H < 1.333 and Y ≥ 0.75D

Per Eq. 13-45, $N_i = 1.39AiGD^2 = (1.39)(0.1912)(1.00)(10.1667)^2 = 27.4734$ lbf/in

Per Eq. 13-46, $N_c = \frac{0.98AcGD^2\cosh[3.68(H - Y)/D]}{\cosh[3.68H/D]} =$

$$\frac{(0.98)(0.1216)(1.0000)(10.1667)^2\cosh[3.68(10.0833 - 9.5833)/10.1667]}{\cosh[(3.68)(10.0833/10.1667)]}$$

= 0.6506 lbf/in

$N_h = 2.60DYG = (2.60)(10.1667)(9.5833)(1.00) = 253.3194$ lbf/in

Shell thickness: t = 0.2500 in

Per Eq. 13-42, $\sigma_T = [N_h + \sqrt{\{N_i^2 + N_c^2 + (AvN_h)^2\}}]/t =$
$[253.3194 + \sqrt{\{(27.4734)^2 + (0.6506)^2 + (0.0625 * 253.3194)^2\}}]/0.2500$
= 1140.1228 psi

Allowable stress: Sa = 16995.7500 psi

Minimum required thickness = (σ_T * t)/Sa =
(1140.1228 * 0.2500)/16995.7500 = 0.0168 in

Required shell thickness for Nozzle Calculations: t_r = 0.0199 in

Reinforcement of Nozzle for Design:
Diameter of Hole in Shell: D_1 = 2.3750 in
Required Area: $A_r = t_r D_s$ = 0.0199 * 2.3750 = 0.0472 in²

Available Reinforcement from shell:
Diameter of Shell available: D_s = 2.3750 in
Shell corrosion allowance: C_s = 0.0000 in
Available Area: $A_{as} = 2(D_s - D_1/2)(t - C_s - t_r)$ =
2 * (2.3750 - 2.3750/2)* (0.2500 - 0.0000 - 0.0199) = 0.5466 in²

Check nozzle attachment strength paths:
Required strength: $W_r = (A_r - A_{as})S_a$ =
(0.0472 - 0.5466) * 15000.0000 = -7490.6413 lbs

Nozzle neck:
Allowable stress: S_n = 15000.0000 psi

Outside fillet weld:
Weld size: W_o = 0.2500 in
Allowable stress: S_o = 15000.0000 psi

Shell Groove weld:
Weld size: W_g = 0.2500 in
Allowable stress: S_g = 15000.0000 psi

Check attachment strength: Outside fillet weld, Groove weld
W_a = {0.60 * S_o * π * d * 0.707(W_o) +
0.850 * 0.70 * S_g * π * d * (W_g - C_s)}/2 =
{0.60 * 15000.0000 * π * 2.3750 * 0.707(0.2500) +
0.850 * 0.70 * 15000.0000 * π * 2.3750 * (0.2500 - 0.0000)}/2 =
14258.5110 lbs

Check attachment strength: Nozzle neck, Outside fillet weld
W_a = {0.80 * 0.875 * S_n * π * (t_n - C_n) * (d - t_n - C_n) +
0.60 * S_o * π * d * 0.707(W_o)}/2 =
{0.80 * 0.875 * 15000.0000 * π * (0.3430 - 0.0000) * (2.3750 - 0.3430 - 0.0000) +
0.60 * 15000.0000 * π * 2.3750 * 0.707(0.2500)}/2 =
17429.9947 lbs

Nozzle reinforcement calculations are not required.

2" Level Nozzle - J

Description: 2" 150# SO Flanged Nozzle
Elevation: 25.0000 in
Orientation: 210.0000°
Corrosion Allowance: Cn = 0.0000 in

Nozzle Neck: 160 Pipe
Material Grade: A53-B
Outside Diameter: d = 2.3750 in
Wall Thickness: t_n = 0.3430 in
Outside Projection: Po = 6.0000 in
Inside Projection: Pi = 0.0000 in

Flange Material Grade: A105

Calculate Required Shell Thickness at Nozzle

For Design: tr = 2.6000 * (8.0000 + 0.0000) * 10.1667 * 1.0000/[0.8500 * 15000.0000]
= 0.0166 in

Hoop Stress at Nozzle

Y = 8.0000 ft

D/H < 1.333 and Y ≥ 0.75D

Per Eq. 13-45, $N_i = 1.39A_iGD^2 = (1.39)(0.1912)(1.00)(10.1667)^2 = 27.4734$ lbf/in

Per Eq. 13-46, $N_c = \dfrac{0.98AcGD^2\cosh[3.68(H - Y)/D]}{\cosh[3.68H/D]} =$

$$\frac{(0.98)(0.1216)(1.0000)(10.1667)^2\cosh[3.68(10.0833 - 8.0000)/10.1667]}{\cosh[(3.68)(10.0833/10.1667)]}$$

= 0.8309 lbf/in

$N_h = 2.60DYG = (2.60)(10.1667)(8.0000)(1.00) = 211.4667$ lbf/in

Shell thickness: t = 0.2500 in

Per Eq. 13-42, $\sigma_T = [N_h + \sqrt{\{N_i^2 + N_c^2 + (A_vN_h)^2\}}]/t =$
$[211.4667 + \sqrt{\{(27.4734)^2 + (0.8309)^2 + (0.0625 * 211.4667)^2\}}]/0.2500$
= 967.8481 psi

Allowable stress: Sa = 16995.7500 psi

Minimum required thickness = $(\sigma_T * t)/Sa =$
(967.8481 * 0.2500)/16995.7500 = 0.0142 in

Required shell thickness for Nozzle Calculations: t_r = 0.0166 in

Reinforcement of Nozzle for Design:
Diameter of Hole in Shell: D_1 = 2.3750 in
Required Area: $A_r = t_r D_s$ = 0.0166 * 2.3750 = 0.0394 in²

Available Reinforcement from shell:
Diameter of Shell available: D_s = 2.3750 in
Shell corrosion allowance: C_s = 0.0000 in
Available Area: $A_{as} = 2(D_s - D_1/2)(t - C_s - t_r)$ =
2 * (2.3750 - 2.3750/2)* (0.2500 - 0.0000 - 0.0166) = 0.5544 in²

Check nozzle attachment strength paths:
Required strength: $W_r = (A_r - A_{as})S_a$ =
(0.0394 - 0.5544) * 15000.0000 = -7724.5245 lbs

Nozzle neck:
Allowable stress: S_n = 15000.0000 psi

Outside fillet weld:
Weld size: W_o = 0.2500 in
Allowable stress: S_o = 15000.0000 psi

Shell Groove weld:
Weld size: W_g = 0.2500 in
Allowable stress: S_g = 15000.0000 psi

Check attachment strength: Outside fillet weld, Groove weld
W_a = {0.60 * S_o * π * d * 0.707(W_o) +
0.850 * 0.70 * S_g * π * d * (W_g - C_s)}/2 =
{0.60 * 15000.0000 * π * 2.3750 * 0.707(0.2500) +
0.850 * 0.70 * 15000.0000 * π * 2.3750 * (0.2500 - 0.0000)}/2 =
14258.5110 lbs

Check attachment strength: Nozzle neck, Outside fillet weld
W_a = {0.80 * 0.875 * S_n * π * (t_n - C_n) * (d - t_n - C_n) +
0.60 * S_o * π * d * 0.707(W_o)}/2 =
{0.80 * 0.875 * 15000.0000 * π * (0.3430 - 0.0000) * (2.3750 - 0.3430 - 0.0000) +
0.60 * 15000.0000 * π * 2.3750 * 0.707(0.2500)}/2 =
17429.9947 lbs

Nozzle reinforcement calculations are not required.

24"Dia. Shell Manway - I

Description: 24" API-650 Shell Manhole w/Blind Flange
Elevation: 18.0000 in
Orientation: 180.0000°
Corrosion Allowance: Cn = 0.0000 in

Nozzle Neck: Plate
Material Grade: A36
Outside Diameter: d = 24.5000 in
Wall Thickness: t_n = 0.2500 in
Outside Projection: Po = 8.0000 in
Inside Projection: Pi = 0.0000 in

Reinforcing Pad:
Material Grade: A36
Thickness: tp = 0.2500 in
Outside Diameter: Dp = 32.0000 in

Flange Material Grade: A36

Thickness: 0.5000 in
Machining Allowance: 0.1875 in

Blind Flange Material Grade: A36

Thickness: 0.3750 in

Calculate Required Shell Thickness at Nozzle

For Design: tr = 2.6000 * (8.5833 + 0.0000) * 10.1667 * 1.0000/[0.8500 * 15000.0000]
= 0.0178 in

Hoop Stress at Nozzle

Y = 8.5833 ft

D/H < 1.333 and Y ≥ 0.75D

Per Eq. 13-45, $N_i = 1.39A_iGD^2 = (1.39)(0.1912)(1.00)(10.1667)^2 = 27.4734$ lbf/in

Per Eq. 13-46, $N_c = \dfrac{0.98AcGD^2\cosh[3.68(H - Y)/D]}{\cosh[3.68H/D]} =$

$$\frac{(0.98)(0.1216)(1.0000)(10.1667)^2\cosh[3.68(10.0833 - 8.5833)/10.1667]}{\cosh[(3.68)(10.0833/10.1667)]}$$

= 0.7368 lbf/in

$N_h = 2.60DYG = (2.60)(10.1667)(8.5833)(1.00) = 226.8861$ lbf/in

Shell thickness: t = 0.2500 in

Per Eq. 13-42, $\sigma_T = [N_h + \sqrt{\{N_i^2 + N_c^2 + (A_v N_h)^2\}}]/t =$
$[226.8861 + \sqrt{\{(27.4734)^2 + (0.7368)^2 + (0.0625 * 226.8861)^2\}}]/0.2500$
$= 1031.2340$ psi

Allowable stress: Sa = 16995.7500 psi

Minimum required thickness = $(\sigma_T * t)/Sa =$
$(1031.2340 * 0.2500)/16995.7500 = 0.0152$ in

Required shell thickness for Nozzle Calculations: $t_r = 0.0178$ in

Reinforcement of Nozzle for Design:
Diameter of Hole in Shell: $D_1 = 24.5000$ in
Required Area: $A_r = t_r D_s = 0.0178 * 24.5000 = 0.4360$ in²

Available Reinforcement from shell:
Diameter of Shell available: $D_s = 24.5000$ in
Shell corrosion allowance: $C_s = 0.0000$ in
Available Area: $A_{as} = 2(D_s - D_1/2)(t - C_s - t_r) =$
$2 * (24.5000 - 24.5000/2) * (0.2500 - 0.0000 - 0.0178) = 5.6890$ in²

Available Reinforcement from shell (below nozzle):
Diameter of Shell available: $D_{sb} = 18.0000$ in
Available Area: $A_{as} = 2(D_{sb} - D_1/2)(t - C_s - t_r) =$
$2 * (18.0000 - 24.5000/2) * (0.2500 - 0.0000 - 0.0178) = 2.6704$ in²

Area available from shell is the lesser of:
Area above nozzle: 5.6890 in²
and Area below nozzle: 2.6704 in²

Available Reinforcement from nozzle neck per Sec. 3.13:
Reduction factor: F_n 1.0000

Available Reinforcement from outside projection:
Projection: L_o = lesser of P_o or $4t_n = 1.0000$ in
Available Area: $A_{ano} = 2F_n L_o(t_n - C_n) =$
$2 * 1.0000 * 1.0000 * (0.2500 - 0.0000) = 0.5000$ in²

Available Reinforcement from portion in shell:
Available Area: $A_{an} = 2F_n(t - C_s)(t_n - C_n) =$
$2 * 1.0000 * (0.2500 - 0.0000) * (0.2500 - 0.0000) = 0.1250$ in²

Available Reinforcement from reinforcing pad:

Reduction factor: $F_p = 1.0000$

Reinforcing pad outside limit: $L_{po} = 32.0000$ in
Reinforcing pad inside diameter: $L_{pi} = 24.6250$ in
Available Area: $A_{arp} = F_p(L_{po} - L_{pi})(t_p) =$
$1.0000 * (32.0000 - 24.6250) * 0.2500 = 1.8438$ in²

Total available area of reinforcement: A_{at} = 5.1391 in²

Check nozzle attachment strength paths:

Required strength: $W_r = (A_r - A_{as})S_a$ =
(0.4360 - 2.6704) * 15000.0000 = -33515.7059 lbs

Nozzle neck:
Allowable stress: S_n = 15000.0000 psi

Outside fillet weld:
Weld size: W_o = 0.2500 in
Allowable stress: S_o = 15000.0000 psi

Shell Groove weld:
Weld size: W_g = 0.2500 in
Allowable stress: S_g = 15000.0000 psi

Reinforcing pad fillet weld:
Weld size: W_p = 0.2500 in
Allowable stress: S_p = 15000.0000 psi

Check attachment strength: Outside fillet weld, Groove weld

W_a = {0.60 * S_o * π * d * 0.707(W_o) +
0.850 * 0.70 * S_g * π * d * (W_g - C_s)}/2 =
{0.60 * 15000.0000 * π * 24.5000 * 0.707(0.2500) +
0.850 * 0.70 * 15000.0000 * π * 24.5000 * (0.2500 - 0.0000)}/2 =
147087.7972 lbs

Check attachment strength: Repad fillet weld, Groove weld

W_a = {0.60 * S_p * π * D_p * 0.707(W_p) +
0.850 * 0.70 * S_g * π * d * (W_g - C_s)}/2 =
{0.60 * 15000.0000 * π * 32.0000 * 0.707(0.2500) +
0.850 * 0.70 * 15000.0000 * π * 24.5000 * (0.2500 - 0.0000)}/2 =
165828.3792 lbs

Check attachment strength: Nozzle neck, Repad fillet weld

W_a = {0.80 * 0.875 * S_n * π * (t_n - C_n) * (d - t_n - C_n) +
0.60 * S_p * π * D_p * 0.707(W_p)}/2 =
{0.80 * 0.875 * 15000.0000 * π * (0.2500 - 0.0000) * (24.5000 - 0.2500 - 0.0000) +
0.60 * 15000.0000 * π * 32.0000 * 0.707(0.2500)}/2 =
179950.8199 lbs

4" Level Nozzle - G

Description: 4" 150# SO Flanged Nozzle
Elevation: 100.0000 in
Orientation: 180.0000°
Corrosion Allowance: Cn = 0.0000 in

Nozzle Neck: SCH80 Pipe
Material Grade: A53-B
Outside Diameter: d = 4.5000 in
Wall Thickness: t_n = 0.3370 in
Outside Projection: Po = 6.0000 in
Inside Projection: Pi = 0.0000 in

Reinforcing Pad:
Material Grade: A36
Thickness: tp = 0.2500 in
Outside Diameter: Dp = 8.0000 in

Flange Material Grade: A105

Calculate Required Shell Thickness at Nozzle

For Design: tr = 2.6000 * (1.7500 + 0.0000) * 10.1667 * 1.0000/[0.8500 * 15000.0000]
= 0.0036 in

Hoop Stress at Nozzle

Y = 1.7500 ft

D/H < 1.333 and Y < 0.75D

Per Eq. 13-44, $N_i = 2.77A_iGD^2 \left[\frac{Y}{0.75D} - 0.5 \left(\frac{Y}{0.75D} \right)^2 \right] =$

$(2.77)(0.1912)(1.00)(10.1667)^2 \left[\frac{1.7500}{(0.75)(10.1667)} - 0.5 \left(\frac{1.7500}{(0.75)(10.1667)} \right)^2 \right]$

= 11.1234 lbf/in

Per Eq. 13-46, $N_c = \frac{0.98A_cGD^2\cosh[3.68(H - Y)/D]}{\cosh[3.68H/D]} =$

$\frac{(0.98)(0.1216)(1.0000)(10.1667)^2\cosh[3.68(10.0833 - 1.7500)/10.1667]}{\cosh[(3.68)(10.0833/10.1667)]}$

= 6.5504 lbf/in

$N_h = 2.60DYG = (2.60)(10.1667)(1.7500)(1.00) = 46.2583$ lbf/in

Shell thickness: t = 0.2500 in

Per Eq. 13-42, $\sigma_T = [N_h + \sqrt{\{N_i^2 + N_c^2 + (A_v N_h)^2\}}]/t =$
$[46.2583 + \sqrt{\{(11.1234)^2 + (6.5504)^2 + (0.0625 * 46.2583)^2\}}]/0.2500$
$= 237.9465$ psi

Allowable stress: Sa = 16995.7500 psi

Minimum required thickness = $(\sigma_T * t)/Sa =$
$(237.9465 * 0.2500)/16995.7500 = 0.0035$ in

Required shell thickness for Nozzle Calculations: $t_r = 0.0036$ in

Reinforcement of Nozzle for Design:
Diameter of Hole in Shell: $D_1 = 4.5000$ in
Required Area: $A_r = t_r D_s = 0.0036 * 4.5000 = 0.0163$ in²

Available Reinforcement from shell:
Diameter of Shell available: $D_s = 4.5000$ in
Shell corrosion allowance: $C_s = 0.0000$ in
Available Area: $A_{as} = 2(D_s - D_1/2)(t - C_s - t_r) =$
$2 * (4.5000 - 4.5000/2)* (0.2500 - 0.0000 - 0.0036) = 1.1087$ in²

Available Reinforcement from nozzle neck per Sec. 3.13:

Reduction factor: F_n 1.0000

Available Reinforcement from outside projection:
Projection: L_o = lesser of P_o or $4t_n = 1.3480$ in
Available Area: $A_{ano} = 2F_nL_o(t_n - C_n) =$
$2 * 1.0000 * 1.3480 * (0.3370 - 0.0000) = 0.9086$ in²

Available Reinforcement from portion in shell:
Available Area: $A_{an} = 2F_n(t - C_s)(t_n - C_n) =$
$2 * 1.0000 * (0.2500 - 0.0000) * (0.3370 - 0.0000) = 0.1685$ in²

Available Reinforcement from reinforcing pad:

Reduction factor: $F_p = 1.0000$

Reinforcing pad outside limit: $L_{po} = 8.0000$ in
Reinforcing pad inside diameter: $L_{pi} = 4.6250$ in
Available Area: $A_{arp} = F_p(L_{po} - L_{pi})(t_p) =$
$1.0000 * (8.0000 - 4.6250) * 0.2500 = 0.8438$ in²

Total available area of reinforcement: $A_{at} = 3.0295$ in²

Check nozzle attachment strength paths:
Required strength: $W_r = (A_r - A_{as})S_a =$
$(0.0163 - 1.1087) * 15000.0000 = -16385.2059$ lbs

Nozzle neck:
Allowable stress: S_n = 15000.0000 psi

Outside fillet weld:
Weld size: W_o = 0.2500 in
Allowable stress: S_o = 15000.0000 psi

Shell Groove weld:
Weld size: W_g = 0.2500 in
Allowable stress: S_g = 15000.0000 psi

Reinforcing pad fillet weld:
Weld size: W_p = 0.2500 in
Allowable stress: S_p = 15000.0000 psi

Check attachment strength: Outside fillet weld, Groove weld

W_a = {0.60 * S_o * π * d * 0.707(W_o) +
0.850 * 0.70 * S_g * π * d * (W_g - C_s)}/2 =
{0.60 * 15000.0000 * π * 4.5000 * 0.707(0.2500) +
0.850 * 0.70 * 15000.0000 * π * 4.5000 * (0.2500 - 0.0000)}/2 =
27016.1260 lbs

Check attachment strength: Repad fillet weld, Groove weld

W_a = {0.60 * S_p * π * D_p * 0.707(W_p) +
0.850 * 0.70 * S_g * π * d * (W_g - C_s)}/2 =
{0.60 * 15000.0000 * π * 8.0000 * 0.707(0.2500) +
0.850 * 0.70 * 15000.0000 * π * 4.5000 * (0.2500 - 0.0000)}/2 =
35761.7309 lbs

Check attachment strength: Nozzle neck, Repad fillet weld

W_a = {0.80 * 0.875 * S_n * π * (t_n - C_n) * (d - t_n - C_n) +
0.60 * S_p * π * D_p * 0.707(W_p)}/2 =
{0.80 * 0.875 * 15000.0000 * π * (0.3370 - 0.0000) * (4.5000 - 0.3370 - 0.0000) +
0.60 * 15000.0000 * π * 8.0000 * 0.707(0.2500)}/2 =
43129.0021 lbs

4" Level Nozzle - H

Description: 4" 150# SO Flanged Nozzle
Elevation: 25.0000 in
Orientation: 150.0000°
Corrosion Allowance: Cn = 0.0000 in

Nozzle Neck: SCH80 Pipe
Material Grade: A53-B
Outside Diameter: d = 4.5000 in
Wall Thickness: t_n = 0.3370 in
Outside Projection: Po = 6.0000 in
Inside Projection: Pi = 0.0000 in

Reinforcing Pad:
Material Grade: A36
Thickness: tp = 0.2500 in
Outside Diameter: Dp = 10.0000 in

Flange Material Grade: A105

Calculate Required Shell Thickness at Nozzle

For Design: tr = 2.6000 * (8.0000 + 0.0000) * 10.1667 * 1.0000/[0.8500 * 15000.0000]
= 0.0166 in

Hoop Stress at Nozzle

Y = 8.0000 ft

D/H < 1.333 and Y ≥ 0.75D

Per Eq. 13-45, $N_i = 1.39AiGD^2 = (1.39)(0.1912)(1.00)(10.1667)^2 = 27.4734$ lbf/in

Per Eq. 13-46, $N_c = \frac{0.98AcGD^2\cosh[3.68(H - Y)/D]}{\cosh[3.68H/D]} =$

$$\frac{(0.98)(0.1216)(1.0000)(10.1667)^2\cosh[3.68(10.0833 - 8.0000)/10.1667]}{\cosh[(3.68)(10.0833/10.1667)]}$$

= 0.8309 lbf/in

$N_h = 2.60DYG = (2.60)(10.1667)(8.0000)(1.00) = 211.4667$ lbf/in

Shell thickness: t = 0.2500 in

Per Eq. 13-42, $\sigma_T = [N_h + \sqrt{\{N_i^2 + N_c^2 + (A_v N_h)^2\}}]/t =$
$[211.4667 + \sqrt{\{(27.4734)^2 + (0.8309)^2 + (0.0625 * 211.4667)^2\}}]/0.2500$
= 967.8481 psi

Allowable stress: Sa = 16995.7500 psi

Minimum required thickness = (σ_T * t)/Sa =
(967.8481 * 0.2500)/16995.7500 = 0.0142 in

Required shell thickness for Nozzle Calculations: t_r = 0.0166 in

Reinforcement of Nozzle for Design:
Diameter of Hole in Shell: D_1 = 4.5000 in
Required Area: $A_r = t_r D_s$ = 0.0166 * 4.5000 = 0.0746 in²

Available Reinforcement from shell:
Diameter of Shell available: D_s = 4.5000 in
Shell corrosion allowance: C_s = 0.0000 in
Available Area: $A_{as} = 2(D_s - D_1/2)(t - C_s - t_r)$ =
2 * (4.5000 - 4.5000/2)* (0.2500 - 0.0000 - 0.0166) = 1.0504 in²

Available Reinforcement from nozzle neck per Sec. 3.13:
Reduction factor: F_n 1.0000

Available Reinforcement from outside projection:
Projection: L_o = lesser of P_o or $4t_n$ = 1.3480 in
Available Area: $A_{ano} = 2F_nL_o(t_n - C_n)$ =
2 * 1.0000 * 1.3480 * (0.3370 - 0.0000) = 0.9086 in²

Available Reinforcement from portion in shell:
Available Area: $A_{an} = 2F_n(t - C_s)(t_n - C_n)$ =
2 * 1.0000 * (0.2500 - 0.0000) * (0.3370 - 0.0000) = 0.1685 in²

Available Reinforcement from reinforcing pad:

Reduction factor: F_p = 1.0000

Reinforcing pad outside limit: L_{po} = 9.0000 in
Reinforcing pad inside diameter: L_{pi} = 4.6250 in
Available Area: $A_{arp} = F_p(L_{po} - L_{pi})(t_p)$ =
1.0000 * (9.0000 - 4.6250) * 0.2500 = 1.0938 in²

Total available area of reinforcement: A_{at} = 3.2212 in²

Check nozzle attachment strength paths:
Required strength: $W_r = (A_r - A_{as})S_a$ =
(0.0746 - 1.0504) * 15000.0000 = -14635.9412 lbs

Nozzle neck:
Allowable stress: S_n = 15000.0000 psi

Outside fillet weld:
Weld size: W_o = 0.2500 in
Allowable stress: S_o = 15000.0000 psi

Shell Groove weld:
Weld size: W_g = 0.2500 in
Allowable stress: S_g = 15000.0000 psi

Reinforcing pad fillet weld:
Weld size: W_p = 0.2500 in
Allowable stress: S_p = 15000.0000 psi

Check attachment strength: Outside fillet weld, Groove weld

$$W_a = \{0.60 * S_o * \pi * d * 0.707(W_o) + 0.850 * 0.70 * S_g * \pi * d * (W_g - C_s)\}/2 =$$
$$\{0.60 * 15000.0000 * \pi * 4.5000 * 0.707(0.2500) + 0.850 * 0.70 * 15000.0000 * \pi * 4.5000 * (0.2500 - 0.0000)\}/2 =$$
27016.1260 lbs

Check attachment strength: Repad fillet weld, Groove weld

$$W_a = \{0.60 * S_p * \pi * D_p * 0.707(W_p) + 0.850 * 0.70 * S_g * \pi * d * (W_g - C_s)\}/2 =$$
$$\{0.60 * 15000.0000 * \pi * 10.0000 * 0.707(0.2500) + 0.850 * 0.70 * 15000.0000 * \pi * 4.5000 * (0.2500 - 0.0000)\}/2 =$$
40759.2194 lbs

Check attachment strength: Nozzle neck, Repad fillet weld

$$W_a = \{0.80 * 0.875 * S_n * \pi * (t_n - C_n) * (d - t_n - C_n) + 0.60 * S_p * \pi * D_p * 0.707(W_p)\}/2 =$$
$$\{0.80 * 0.875 * 15000.0000 * \pi * (0.3370 - 0.0000) * (4.5000 - 0.3370 - 0.0000) + 0.60 * 15000.0000 * \pi * 10.0000 * 0.707(0.2500)\}/2 =$$
48126.4906 lbs

4" Spare Nozzle - K

Description: 4" 150# SO Flanged Nozzle
Elevation: 100.0000 in
Orientation: 240.0000°
Corrosion Allowance: Cn = 0.0000 in

Nozzle Neck: SCH80 Pipe
Material Grade: A53-B
Outside Diameter: d = 4.5000 in
Wall Thickness: t_n = 0.3370 in
Outside Projection: Po = 6.0000 in
Inside Projection: Pi = 0.0000 in

Reinforcing Pad:
Material Grade: A36
Thickness: tp = 0.2500 in
Outside Diameter: Dp = 10.0000 in

Flange Material Grade: A105

Calculate Required Shell Thickness at Nozzle

For Design: tr = 2.6000 * (1.7500 + 0.0000) * 10.1667 * 1.0000/[0.8500 * 15000.0000]
= 0.0036 in

Hoop Stress at Nozzle

Y = 1.7500 ft

D/H < 1.333 and Y < 0.75D

Per Eq. 13-44, $N_i = 2.77A_iGD^2 \left[\frac{Y}{0.75D} - 0.5 \left(\frac{Y}{0.75D} \right)^2 \right] =$

$$(2.77)(0.1912)(1.00)(10.1667)^2 \left[\frac{1.7500}{(0.75)(10.1667)} - 0.5 \left(\frac{1.7500}{(0.75)(10.1667)} \right)^2 \right]$$

= 11.1234 lbf/in

Per Eq. 13-46, $N_c = \frac{0.98A_cGD^2\cosh[3.68(H - Y)/D]}{\cosh[3.68H/D]} =$

$$\frac{(0.98)(0.1216)(1.0000)(10.1667)^2\cosh[3.68(10.0833 - 1.7500)/10.1667]}{\cosh[(3.68)(10.0833/10.1667)]}$$

= 6.5504 lbf/in

$N_h = 2.60DYG = (2.60)(10.1667)(1.7500)(1.00) = 46.2583$ lbf/in

Shell thickness: t = 0.2500 in

Per Eq. 13-42, $\sigma_T = [N_h + \sqrt{\{N_i^2 + N_c^2 + (A_v N_h)^2\}}]/t =$
$[46.2583 + \sqrt{\{(11.1234)^2 + (6.5504)^2 + (0.0625 * 46.2583)^2\}}]/0.2500$
$= 237.9465$ psi

Allowable stress: Sa = 16995.7500 psi

Minimum required thickness = $(\sigma_T * t)/Sa =$
$(237.9465 * 0.2500)/16995.7500 = 0.0035$ in

Required shell thickness for Nozzle Calculations: $t_r = 0.0036$ in

Reinforcement of Nozzle for Design:
Diameter of Hole in Shell: $D_1 = 4.5000$ in
Required Area: $A_r = t_r D_s = 0.0036 * 4.5000 = 0.0163$ in²

Available Reinforcement from shell:
Diameter of Shell available: $D_s = 4.5000$ in
Shell corrosion allowance: $C_s = 0.0000$ in
Available Area: $A_{as} = 2(D_s - D_1/2)(t - C_s - t_r) =$
$2 * (4.5000 - 4.5000/2)* (0.2500 - 0.0000 - 0.0036) = 1.1087$ in²

Available Reinforcement from nozzle neck per Sec. 3.13:

Reduction factor: F_n 1.0000

Available Reinforcement from outside projection:
Projection: L_o = lesser of P_o or $4t_n = 1.3480$ in
Available Area: $A_{ano} = 2F_nL_o(t_n - C_n) =$
$2 * 1.0000 * 1.3480 * (0.3370 - 0.0000) = 0.9086$ in²

Available Reinforcement from portion in shell:
Available Area: $A_{an} = 2F_n(t - C_s)(t_n - C_n) =$
$2 * 1.0000 * (0.2500 - 0.0000) * (0.3370 - 0.0000) = 0.1685$ in²

Available Reinforcement from reinforcing pad:

Reduction factor: $F_p = 1.0000$

Reinforcing pad outside limit: $L_{po} = 9.0000$ in
Reinforcing pad inside diameter: $L_{pi} = 4.6250$ in
Available Area: $A_{arp} = F_p(L_{po} - L_{pi})(t_p) =$
$1.0000 * (9.0000 - 4.6250) * 0.2500 = 1.0938$ in²

Total available area of reinforcement: $A_{at} = 3.2795$ in²

Check nozzle attachment strength paths:
Required strength: $W_r = (A_r - A_{as})S_a =$
$(0.0163 - 1.1087) * 15000.0000 = -16385.2059$ lbs

Nozzle neck:
Allowable stress: S_n = 15000.0000 psi

Outside fillet weld:
Weld size: W_o = 0.2500 in
Allowable stress: S_o = 15000.0000 psi

Shell Groove weld:
Weld size: W_g = 0.2500 in
Allowable stress: S_g = 15000.0000 psi

Reinforcing pad fillet weld:
Weld size: W_p = 0.2500 in
Allowable stress: S_p = 15000.0000 psi

Check attachment strength: Outside fillet weld, Groove weld

W_a = {0.60 * S_o * π * d * 0.707(W_o) +
0.850 * 0.70 * S_g * π * d * (W_g - C_s)}/2 =
{0.60 * 15000.0000 * π * 4.5000 * 0.707(0.2500) +
0.850 * 0.70 * 15000.0000 * π * 4.5000 * (0.2500 - 0.0000)}/2 =
27016.1260 lbs

Check attachment strength: Repad fillet weld, Groove weld

W_a = {0.60 * S_p * π * D_p * 0.707(W_p) +
0.850 * 0.70 * S_g * π * d * (W_g - C_s)}/2 =
{0.60 * 15000.0000 * π * 10.0000 * 0.707(0.2500) +
0.850 * 0.70 * 15000.0000 * π * 4.5000 * (0.2500 - 0.0000)}/2 =
40759.2194 lbs

Check attachment strength: Nozzle neck, Repad fillet weld

W_a = {0.80 * 0.875 * S_n * π * (t_n - C_n) * (d - t_n - C_n) +
0.60 * S_p * π * D_p * 0.707(W_p)}/2 =
{0.80 * 0.875 * 15000.0000 * π * (0.3370 - 0.0000) * (4.5000 - 0.3370 - 0.0000) +
0.60 * 15000.0000 * π * 10.0000 * 0.707(0.2500)}/2 =
48126.4906 lbs

4" Spare Nozzle - L

Description: 4" 150# SO Flanged Nozzle
Elevation: 25.0000 in
Orientation: 240.0000°
Corrosion Allowance: Cn = 0.0000 in

Nozzle Neck: SCH80 Pipe
Material Grade: A53-B
Outside Diameter: d = 4.5000 in
Wall Thickness: t_n = 0.3370 in
Outside Projection: Po = 6.0000 in
Inside Projection: Pi = 0.0000 in

Reinforcing Pad:
Material Grade: A36
Thickness: tp = 0.2500 in
Outside Diameter: Dp = 10.0000 in

Flange Material Grade: A105

Calculate Required Shell Thickness at Nozzle

For Design: tr = 2.6000 * (8.0000 + 0.0000) * 10.1667 * 1.0000/[0.8500 * 15000.0000]
= 0.0166 in

Hoop Stress at Nozzle

Y = 8.0000 ft

D/H < 1.333 and Y ≥ 0.75D

Per Eq. 13-45, $N_i = 1.39A_iGD^2 = (1.39)(0.1912)(1.00)(10.1667)^2 = 27.4734$ lbf/in

Per Eq. 13-46, $N_c = \frac{0.98A_cGD^2\cosh[3.68(H - Y)/D]}{\cosh[3.68H/D]} =$

$$\frac{(0.98)(0.1216)(1.0000)(10.1667)^2\cosh[3.68(10.0833 - 8.0000)/10.1667]}{\cosh[(3.68)(10.0833/10.1667)]}$$

= 0.8309 lbf/in

$N_h = 2.60DYG = (2.60)(10.1667)(8.0000)(1.00) = 211.4667$ lbf/in

Shell thickness: t = 0.2500 in

Per Eq. 13-42, $\sigma_T = [N_h + \sqrt{\{N_i^2 + N_c^2 + (A_vN_h)^2\}}]/t =$
$[211.4667 + \sqrt{\{(27.4734)^2 + (0.8309)^2 + (0.0625 * 211.4667)^2\}}]/0.2500$
= 967.8481 psi

Allowable stress: Sa = 16995.7500 psi

Minimum required thickness = (σ_T * t)/Sa =
(967.8481 * 0.2500)/16995.7500 = 0.0142 in

Required shell thickness for Nozzle Calculations: t_r = 0.0166 in

Reinforcement of Nozzle for Design:
Diameter of Hole in Shell: D_1 = 4.5000 in
Required Area: $A_r = t_r D_s$ = 0.0166 * 4.5000 = 0.0746 in²

Available Reinforcement from shell:
Diameter of Shell available: D_s = 4.5000 in
Shell corrosion allowance: C_s = 0.0000 in
Available Area: $A_{as} = 2(D_s - D_1/2)(t - C_s - t_r)$ =
2 * (4.5000 - 4.5000/2)* (0.2500 - 0.0000 - 0.0166) = 1.0504 in²

Available Reinforcement from nozzle neck per Sec. 3.13:
Reduction factor: F_n 1.0000

Available Reinforcement from outside projection:
Projection: L_o = lesser of P_o or $4t_n$ = 1.3480 in
Available Area: $A_{ano} = 2F_nL_o(t_n - C_n)$ =
2 * 1.0000 * 1.3480 * (0.3370 - 0.0000) = 0.9086 in²

Available Reinforcement from portion in shell:
Available Area: $A_{an} = 2F_n(t - C_s)(t_n - C_n)$ =
2 * 1.0000 * (0.2500 - 0.0000) * (0.3370 - 0.0000) = 0.1685 in²

Available Reinforcement from reinforcing pad:

Reduction factor: F_p = 1.0000

Reinforcing pad outside limit: L_{po} = 9.0000 in
Reinforcing pad inside diameter: L_{pi} = 4.6250 in
Available Area: $A_{arp} = F_p(L_{po} - L_{pi})(t_p)$ =
1.0000 * (9.0000 - 4.6250) * 0.2500 = 1.0938 in²

Total available area of reinforcement: A_{at} = 3.2212 in²

Check nozzle attachment strength paths:
Required strength: $W_r = (A_r - A_{as})S_a$ =
(0.0746 - 1.0504) * 15000.0000 = -14635.9412 lbs

Nozzle neck:
Allowable stress: S_n = 15000.0000 psi

Outside fillet weld:
Weld size: W_o = 0.2500 in
Allowable stress: S_o = 15000.0000 psi

Shell Groove weld:
Weld size: W_g = 0.2500 in
Allowable stress: S_g = 15000.0000 psi

Reinforcing pad fillet weld:
Weld size: W_p = 0.2500 in
Allowable stress: S_p = 15000.0000 psi

Check attachment strength: Outside fillet weld, Groove weld

$$W_a = \{0.60 * S_o * \pi * d * 0.707(W_o) + 0.850 * 0.70 * S_g * \pi * d * (W_g - C_s)\}/2 =$$
$$\{0.60 * 15000.0000 * \pi * 4.5000 * 0.707(0.2500) + 0.850 * 0.70 * 15000.0000 * \pi * 4.5000 * (0.2500 - 0.0000)\}/2 =$$
27016.1260 lbs

Check attachment strength: Repad fillet weld, Groove weld

$$W_a = \{0.60 * S_p * \pi * D_p * 0.707(W_p) + 0.850 * 0.70 * S_g * \pi * d * (W_g - C_s)\}/2 =$$
$$\{0.60 * 15000.0000 * \pi * 10.0000 * 0.707(0.2500) + 0.850 * 0.70 * 15000.0000 * \pi * 4.5000 * (0.2500 - 0.0000)\}/2 =$$
40759.2194 lbs

Check attachment strength: Nozzle neck, Repad fillet weld

$$W_a = \{0.80 * 0.875 * S_n * \pi * (t_n - C_n) * (d - t_n - C_n) + 0.60 * S_p * \pi * D_p * 0.707(W_p)\}/2 =$$
$$\{0.80 * 0.875 * 15000.0000 * \pi * (0.3370 - 0.0000) * (4.5000 - 0.3370 - 0.0000) + 0.60 * 15000.0000 * \pi * 10.0000 * 0.707(0.2500)\}/2 =$$
48126.4906 lbs

6" Discharge Nozzle - E

Description: 8" 150# SO Flanged Nozzle
Elevation: 12.0000 in
Orientation: 0.0000°
Corrosion Allowance: Cn = 0.0000 in

Nozzle Neck: SCH80 Pipe
Material Grade: A53-B
Outside Diameter: d = 8.6250 in
Wall Thickness: t_n = 0.5000 in
Outside Projection: Po = 6.0000 in
Inside Projection: Pi = 0.0000 in

Reinforcing Pad:
Material Grade: A36
Thickness: tp = 0.2500 in
Outside Diameter: Dp = 15.7500 in

Flange Material Grade: A105

Calculate Required Shell Thickness at Nozzle

For Design: tr = 2.6000 * (9.0833 + 0.0000) * 10.1667 * 1.0000/[0.8500 * 15000.0000]
= 0.0188 in

Hoop Stress at Nozzle

Y = 9.0833 ft

D/H < 1.333 and Y ≥ 0.75D

Per Eq. 13-45, $N_i = 1.39AiGD^2 = (1.39)(0.1912)(1.00)(10.1667)^2 = 27.4734$ lbf/in

Per Eq. 13-46, $N_c = \frac{0.98AcGD^2\cosh[3.68(H - Y)/D]}{\cosh[3.68H/D]} =$

$$\frac{(0.98)(0.1216)(1.0000)(10.1667)^2\cosh[3.68(10.0833 - 9.0833)/10.1667]}{\cosh[(3.68)(10.0833/10.1667)]}$$

= 0.6825 lbf/in

$N_h = 2.60DYG = (2.60)(10.1667)(9.0833)(1.00) = 240.1028$ lbf/in

Shell thickness: t = 0.2500 in

Per Eq. 13-42, $\sigma_T = [N_h + \sqrt{\{N_i^2 + N_c^2 + (A_v N_h)^2\}}]/t =$
$[240.1028 + \sqrt{\{(27.4734)^2 + (0.6825)^2 + (0.0625 * 240.1028)^2\}}]/0.2500$
= 1085.6437 psi

Allowable stress: Sa = 16995.7500 psi

Minimum required thickness = (σ_T * t)/Sa =
(1085.6437 * 0.2500)/16995.7500 = 0.0160 in

Required shell thickness for Nozzle Calculations: t_r = 0.0188 in

Reinforcement of Nozzle for Design:
Diameter of Hole in Shell: D_1 = 8.6250 in
Required Area: $A_r = t_r D_s$ = 0.0188 * 8.6250 = 0.1624 in²

Available Reinforcement from shell:
Diameter of Shell available: D_s = 8.6250 in
Shell corrosion allowance: C_s = 0.0000 in
Available Area: $A_{as} = 2(D_s - D_1/2)(t - C_s - t_r)$ =
2 * (8.6250 - 8.6250/2)* (0.2500 - 0.0000 - 0.0188) = 1.9938 in²

Available Reinforcement from nozzle neck per Sec. 3.13:

Reduction factor: F_n 1.0000

Available Reinforcement from outside projection:
Projection: L_o = lesser of P_o or $4t_n$ = 2.0000 in
Available Area: $A_{ano} = 2F_nL_o(t_n - C_n)$ =
2 * 1.0000 * 2.0000 * (0.5000 - 0.0000) = 2.0000 in²

Available Reinforcement from portion in shell:
Available Area: $A_{an} = 2F_n(t - C_s)(t_n - C_n)$ =
2 * 1.0000 * (0.2500 - 0.0000) * (0.5000 - 0.0000) = 0.2500 in²

Available Reinforcement from reinforcing pad:

Reduction factor: F_p = 1.0000

Reinforcing pad outside limit: L_{po} = 15.7500 in
Reinforcing pad inside diameter: L_{pi} = 8.7500 in
Available Area: $A_{arp} = F_p(L_{po} - L_{pi})(t_p)$ =
1.0000 * (15.7500 - 8.7500) * 0.2500 = 1.7500 in²

Total available area of reinforcement: A_{at} = 5.9938 in²

Check nozzle attachment strength paths:
Required strength: $W_r = (A_r - A_{as})S_a$ =
(0.1624 - 1.9938) * 15000.0000 = -27471.0760 lbs

Nozzle neck:
Allowable stress: S_n = 15000.0000 psi

Outside fillet weld:
Weld size: W_o = 0.2500 in
Allowable stress: S_o = 15000.0000 psi

Shell Groove weld:
Weld size: W_g = 0.2500 in
Allowable stress: S_g = 15000.0000 psi

Reinforcing pad fillet weld:
Weld size: W_p = 0.2500 in
Allowable stress: S_p = 15000.0000 psi

Check attachment strength: Outside fillet weld, Groove weld

$$W_a = \{0.60 * S_o * \pi * d * 0.707(W_o) + 0.850 * 0.70 * S_g * \pi * d * (W_g - C_s)\}/2 =$$
$$\{0.60 * 15000.0000 * \pi * 8.6250 * 0.707(0.2500) + 0.850 * 0.70 * 15000.0000 * \pi * 8.6250 * (0.2500 - 0.0000)\}/2 =$$
51780.9082 lbs

Check attachment strength: Repad fillet weld, Groove weld

$$W_a = \{0.60 * S_p * \pi * D_p * 0.707(W_p) + 0.850 * 0.70 * S_g * \pi * d * (W_g - C_s)\}/2 =$$
$$\{0.60 * 15000.0000 * \pi * 15.7500 * 0.707(0.2500) + 0.850 * 0.70 * 15000.0000 * \pi * 8.6250 * (0.2500 - 0.0000)\}/2 =$$
69584.4610 lbs

Check attachment strength: Nozzle neck, Repad fillet weld

$$W_a = \{0.80 * 0.875 * S_n * \pi * (t_n - C_n) * (d - t_n - C_n) + 0.60 * S_p * \pi * D_p * 0.707(W_p)\}/2 =$$
$$\{0.80 * 0.875 * 15000.0000 * \pi * (0.5000 - 0.0000) * (8.6250 - 0.5000 - 0.0000) + 0.60 * 15000.0000 * \pi * 15.7500 * 0.707(0.2500)\}/2 =$$
106359.5029 lbs

6" Spare Nozzle - M

Description: 6" 150# SO Flanged Nozzle
Elevation: 12.0000 in
Orientation: 90.0000°
Corrosion Allowance: Cn = 0.0000 in

Nozzle Neck: SCH80 Pipe
Material Grade: A53-B
Outside Diameter: d = 6.6250 in
Wall Thickness: t_n = 0.4320 in
Outside Projection: Po = 6.0000 in
Inside Projection: Pi = 0.0000 in

Reinforcing Pad:
Material Grade: A36
Thickness: tp = 0.2500 in
Outside Diameter: Dp = 15.7500 in

Flange Material Grade: A105

Calculate Required Shell Thickness at Nozzle

For Design: tr = 2.6000 * (9.0833 + 0.0000) * 10.1667 * 1.0000/[0.8500 * 15000.0000]
= 0.0188 in

Hoop Stress at Nozzle

Y = 9.0833 ft

D/H < 1.333 and Y ≥ 0.75D

Per Eq. 13-45, $N_i = 1.39AiGD^2 = (1.39)(0.1912)(1.00)(10.1667)^2 = 27.4734$ lbf/in

Per Eq. 13-46, $N_c = \frac{0.98AcGD^2\cosh[3.68(H - Y)/D]}{\cosh[3.68H/D]} =$

$$\frac{(0.98)(0.1216)(1.0000)(10.1667)^2\cosh[3.68(10.0833 - 9.0833)/10.1667]}{\cosh[(3.68)(10.0833/10.1667)]}$$

= 0.6825 lbf/in

$N_h = 2.60DYG = (2.60)(10.1667)(9.0833)(1.00) = 240.1028$ lbf/in

Shell thickness: t = 0.2500 in

Per Eq. 13-42, $\sigma_T = [N_h + \sqrt{\{N_i^2 + N_c^2 + (A_v N_h)^2\}}]/t =$
$[240.1028 + \sqrt{\{(27.4734)^2 + (0.6825)^2 + (0.0625 * 240.1028)^2\}}]/0.2500$
= 1085.6437 psi

Allowable stress: Sa = 16995.7500 psi

Minimum required thickness = (σ_T * t)/Sa =
(1085.6437 * 0.2500)/16995.7500 = 0.0160 in

Required shell thickness for Nozzle Calculations: t_r = 0.0188 in

Reinforcement of Nozzle for Design:
Diameter of Hole in Shell: D_1 = 6.6250 in
Required Area: $A_r = t_r D_s$ = 0.0188 * 6.6250 = 0.1248 in²

Available Reinforcement from shell:
Diameter of Shell available: D_s = 6.6250 in
Shell corrosion allowance: C_s = 0.0000 in
Available Area: $A_{as} = 2(D_s - D_1/2)(t - C_s - t_r)$ =
2 * (6.6250 - 6.6250/2)* (0.2500 - 0.0000 - 0.0188) = 1.5315 in²

Available Reinforcement from nozzle neck per Sec. 3.13:
Reduction factor: F_n 1.0000

Available Reinforcement from outside projection:
Projection: L_o = lesser of P_o or $4t_n$ = 1.7280 in
Available Area: $A_{ano} = 2F_nL_o(t_n - C_n)$ =
2 * 1.0000 * 1.7280 * (0.4320 - 0.0000) = 1.4930 in²

Available Reinforcement from portion in shell:
Available Area: $A_{an} = 2F_n(t - C_s)(t_n - C_n)$ =
2 * 1.0000 * (0.2500 - 0.0000) * (0.4320 - 0.0000) = 0.2160 in²

Available Reinforcement from reinforcing pad:

Reduction factor: F_p = 1.0000

Reinforcing pad outside limit: L_{po} = 13.2500 in
Reinforcing pad inside diameter: L_{pi} = 6.7500 in
Available Area: $A_{arp} = F_p(L_{po} - L_{pi})(t_p)$ =
1.0000 * (13.2500 - 6.7500) * 0.2500 = 1.6250 in²

Total available area of reinforcement: A_{at} = 4.8655 in²

Check nozzle attachment strength paths:
Required strength: $W_r = (A_r - A_{as})S_a$ =
(0.1248 - 1.5315) * 15000.0000 = -21100.9714 lbs

Nozzle neck:
Allowable stress: S_n = 15000.0000 psi

Outside fillet weld:
Weld size: W_o = 0.2500 in
Allowable stress: S_o = 15000.0000 psi

Shell Groove weld:
Weld size: W_g = 0.2500 in
Allowable stress: S_g = 15000.0000 psi

Reinforcing pad fillet weld:
Weld size: W_p = 0.2500 in
Allowable stress: S_p = 15000.0000 psi

Check attachment strength: Outside fillet weld, Groove weld

$$W_a = \{0.60 * S_o * \pi * d * 0.707(W_o) + 0.850 * 0.70 * S_g * \pi * d * (W_g - C_s)\}/2 =$$
$$\{0.60 * 15000.0000 * \pi * 6.6250 * 0.707(0.2500) + 0.850 * 0.70 * 15000.0000 * \pi * 6.6250 * (0.2500 - 0.0000)\}/2 =$$
39773.7411 lbs

Check attachment strength: Repad fillet weld, Groove weld

$$W_a = \{0.60 * S_p * \pi * D_p * 0.707(W_p) + 0.850 * 0.70 * S_g * \pi * d * (W_g - C_s)\}/2 =$$
$$\{0.60 * 15000.0000 * \pi * 15.7500 * 0.707(0.2500) + 0.850 * 0.70 * 15000.0000 * \pi * 6.6250 * (0.2500 - 0.0000)\}/2 =$$
62574.7824 lbs

Check attachment strength: Nozzle neck, Repad fillet weld

$$W_a = \{0.80 * 0.875 * S_n * \pi * (t_n - C_n) * (d - t_n - C_n) + 0.60 * S_p * \pi * D_p * 0.707(W_p)\}/2 =$$
$$\{0.80 * 0.875 * 15000.0000 * \pi * (0.4320 - 0.0000) * (6.6250 - 0.4320 - 0.0000) + 0.60 * 15000.0000 * \pi * 15.7500 * 0.707(0.2500)\}/2 =$$
83481.1654 lbs

Customer:
TECHSAS, Inc.
Job Number:
20099
Date: 01-05-2016 Rev.: 0

Foundation Loads

Dead Load = 134 lbf/ft
Dead Load + Live Load = 184 lbf/ft
Dead Load + Snow Load = 197 lbf/ft
Wind Load + Dead Load = 281 lbf/ft

(Wind Foundation Moment = 11,946 ft-lbs)
(Wind Horizontal Force = 2,091 lbs)

Seismic Load + Dead Load (ringwall foundation) = 600 lbf/ft
Seismic Load + Dead Load (slab foundation) = 743 lbf/ft

(Note: For Seismic the dead load has a portion of the vertical acceleration added to it and includes a portion of the snow load)
(Seismic Overturning Moment (ringwall) (M_{rw}) = 37,631 ft-lbs)
(Seismic Overturning Moment (slab) (M_s) = 49,228 ft-lbs)

(Seismic Horizontal Force = 8,724 lbs)

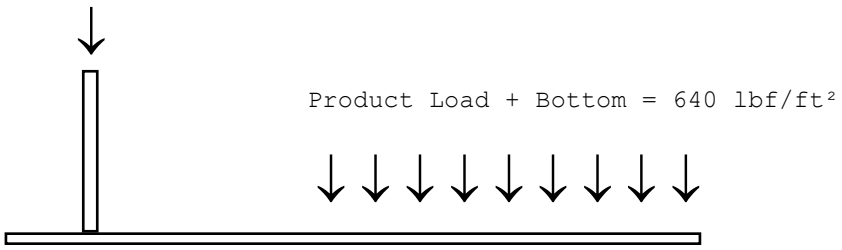

Total Weight of Tank: 5,149 lbs
Total Operating Weight: 56,227 lbs
Total Testing Weight: 56,227 lbs

6000 GAL. WATER STORAGE TANKS (T–210 & T–216)
(10.17'DIA. X 11' HGT.) AWWA–D100–11
FOR
EDB INTERIM MEASURE
KIRTLAND, AFB

TANK – DRAWING LOG						
INDEX	DWG #	CUST DWG #	DESCRIPTION	REVISION #	STATUS	DATE
1	CS01		COVER SHEET	0	IFA	31–Mar–2016
2	E01		GENERAL ARRANGEMENT	0	IFA	31–Mar–2016
3	E02		TANK ORIENTATION T–210	0	IFA	31–Mar–2016
4	E02–A		TANK ORIENTATION T–216	1	IFA	31–Mar–2016
5	E03		SHELL LAYOUT T–210	0	IFA	31–Mar–2016
6	E03–A		SHELL LAYOUT T–216	1	IFA	31–Mar–2016
7	E04		X–RAY MAP	0	IFA	31–Mar–2016
8	E05		SHELL WELD MAP	0	IFA	31–Mar–2016
9	E06		BOTTOM WELD MAP	0	IFA	31–Mar–2016
10	E07		ROOF WELD MAP	0	IFA	31–Mar–2016
11	E08		DIESEL TEST VACUUM	0	IFA	31–Mar–2016
12	E09		TANK ELEVATIONS FOR T–210	0	IFA	31–Mar–2016
13	E09–A		TANK ELEVATIONS FOR T–216	1	IFA	31–Mar–2016
14	BL01		BOTTOM LAYOUT & DETAILS	0	IFA	31–Mar–2016
15	BL02		BOTTOM PLATE DETAILS	0	IFA	31–Mar–2016
16	RL01		ROOF LAYOUT & DETAIL	0	IFA	31–Mar–2016
17	RL02		ROOF PLATE DETAILS	0	IFA	31–Mar–2016
18	TM01		TOP MEMBER	0	IFA	31–Mar–2016
19	PL01		SHELL COURSES PLATES	0	IFA	31–Mar–2016
20	SM01		24" SHELL MNAWAY w/ HINGE	0	IFA	31–Mar–2016
21	SN01		6" DISCHARGE NOZZLE	0	IFA	31–Mar–2016
22	SN02		4" LEVEL NOZZLE	0	IFA	31–Mar–2016
23	SN03		2" DRAIN NOZZLE	0	IFA	31–Mar–2016
24	SN04		4" LEVEL NOZZLE	0	IFA	31–Mar–2016
25	SN05		2" LEVEL NOZZLE	0	IFA	31–Mar–2016
26	SN06		4" SPARE NOZZLE	0	IFA	31–Mar–2016
27	SN07		4" SPARE NOZZLE	0	IFA	31–Mar–2016
28	SN08		6" SPARE NOZZLE	0	IFA	31–Mar–2016
29	RN01		6" FILL NOZZLE	0	IFA	31–Mar–2016
30	RN02		6" FILL NOZZLE	0	IFA	31–Mar–2016
31	RN03		6" VENT NOZZLE	0	IFA	31–Mar–2016
32	RN04		6" SPARE NOZZLE	0	IFA	31–Mar–2016
33	LL01		LIFTING LUGS		IFA	31–Mar–2016
34	NP01		NAMEPLATE & GROUNDING LUGS		IFA	31–Mar–2016

STATUS CODE	
STATUS	DESCRIPTION
P	PRELIMINARY
A	APPROVED
REF	REFERENCE ONLY
R	RESENT TO CUSTOMER
IFR	ISSUED FOR REVIEW
IFA	ISSUED FOR APPROVAL
IFC	ISSUED FOR CONSTRUCTION
IFI	ISSUED FOR INFORMATION
D	DONE

NO.	REVISION DESCRIPTION	DRAWN BY	CHECKED BY	DATE
0				

BROWN-MINNEAPOLIS TANK
C & E, INC.
8301 BROADWAY BLVD SE
ALBUQUERQUE - NM 87105
505-563-4800

TITLE: COVER SHEET		JOB NO. 20099	REVISION NO. 0
CUSTOMER: TECHSAS, INC.			DRAWING NO. CS01
LOCATION:	TANK NO.: T–210 & T–216		
DRNN. BY: GVallo	CHK. BY:	DIA.: 10'–2"	SHEET NO. 1 OF 34
APVD. BY:	DATE: 31–Mar–2016	HT.: 11'–0"	

DESIGN PARAMETERS

GOVERNING STANDARD: AWWA-D-100	INTERNAL PRESSURE: 0 PSI	MIN. DESIGN METAL TEMP.: 25 °F	C.A. SHELL: 0 IN	RADIOGRAPH: SPOT PER CODE	
EDITION: 11TH EDITION	EXTERNAL PRESSURE: 0 PSI	JOINT EFFICIENCY: 0.85	C.A. BOTTOM: 0 IN	ANCHORAGE: NONE	
APPENDIX(ICS):	SPECIFIC GRAVITY: 1.0	BOTTOM SEAMS: LWTSO	C.A. ROOF: 0 IN	WINDGIRDER: NONE	
CAPACITY TO TOP OF SHELL: 6679 GALLONS	WIND: E= C I= 1.15 V= 100 MPH	FIXED ROOF SEAMS: LWTSO	C.A. STRUCTURE: 0 IN	WORKING CAPACITY: 6123 GALLONS	
DESIGN LIQUID LEVEL: 10.08 FT	SEISMIC: SUG= 3 SC= D TL= 6.0 Ss= 0.47 S1= 0.14	FLOATING ROOF SEAMS: --		DESIGN BY: GAV	DATE 02/16/2015
MAX OPERATING TEMPERATURE: 100 °F	ALLOWABLE STRESS: 15,000 PSI	SHELL SEAMS DBW		CHECK BY: GAV	DATE

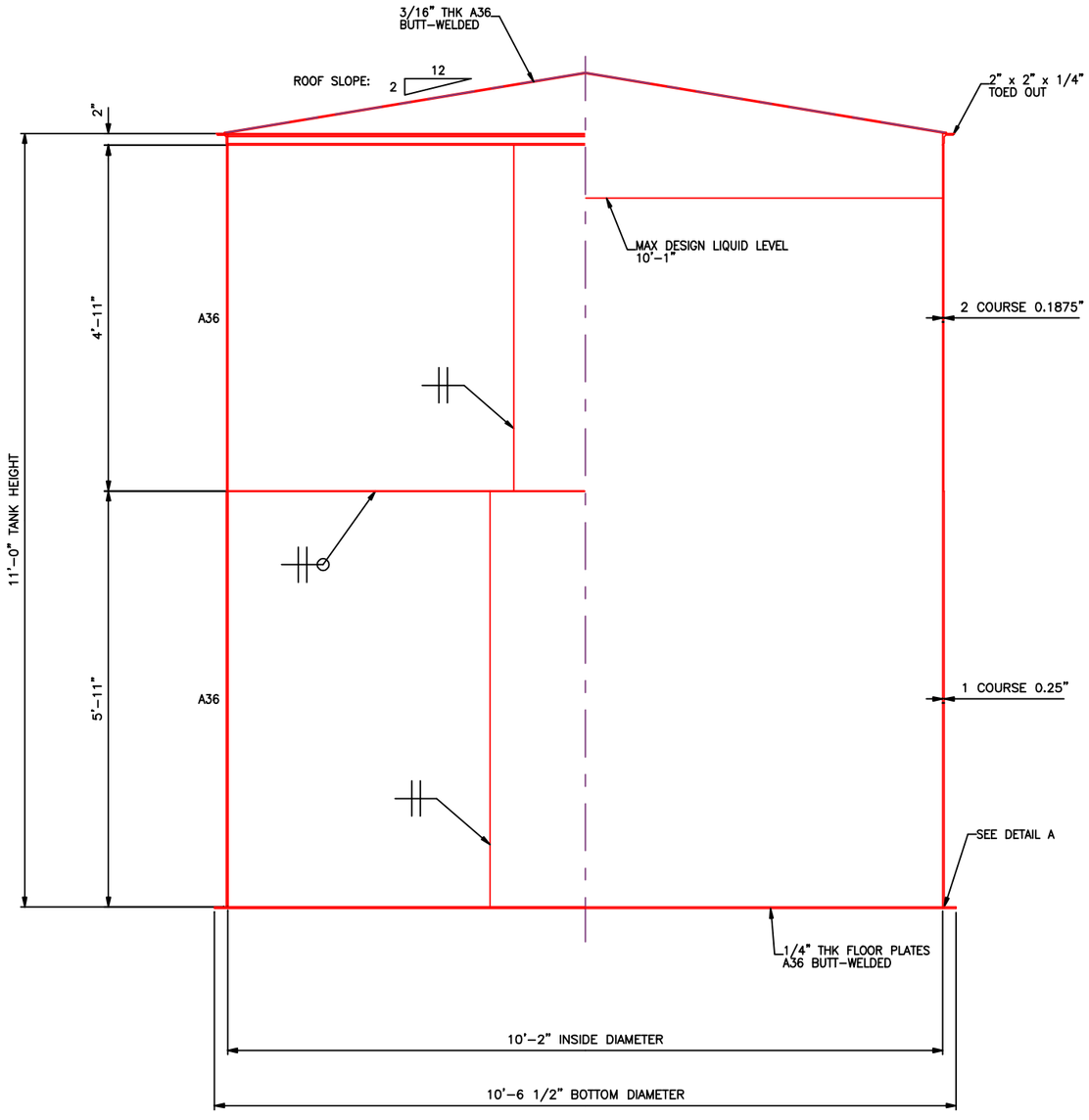

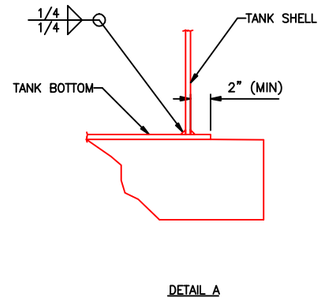

DETAIL A

REV.	ISSUE	BY	DATE	DESCRIPTION
0	01	NP	JAN. 2016	SUBMITTAL FOR APPROVAL

DESIGNED BY: -
DRAWN BY: -
SHEET CHK'D BY: -
SHEET CHK'D BY: -
APPROVED BY: -
DATE: -

BROWN-MINNEAPOLIS TANK
C & E, INC.
8301 BROADWAY BLVD SE
ALBUQUERQUE - NM 87105
505-583-4800

6000 GALLON WATER STORAGE TANKS
T-210 & T-216
10'-2" ID x 11'-0" HEIGHT
TECHSAS, INC
4619 WEST BAYSHORE DRIVE
BACLIFF, TEXAS 77518

GENERAL ARRANGEMENT

TYPE: AWWA-D100-11 | SCALE: AS SHOWN | JOB: 20099

SHEET No. E01

OF: 2 OF 34

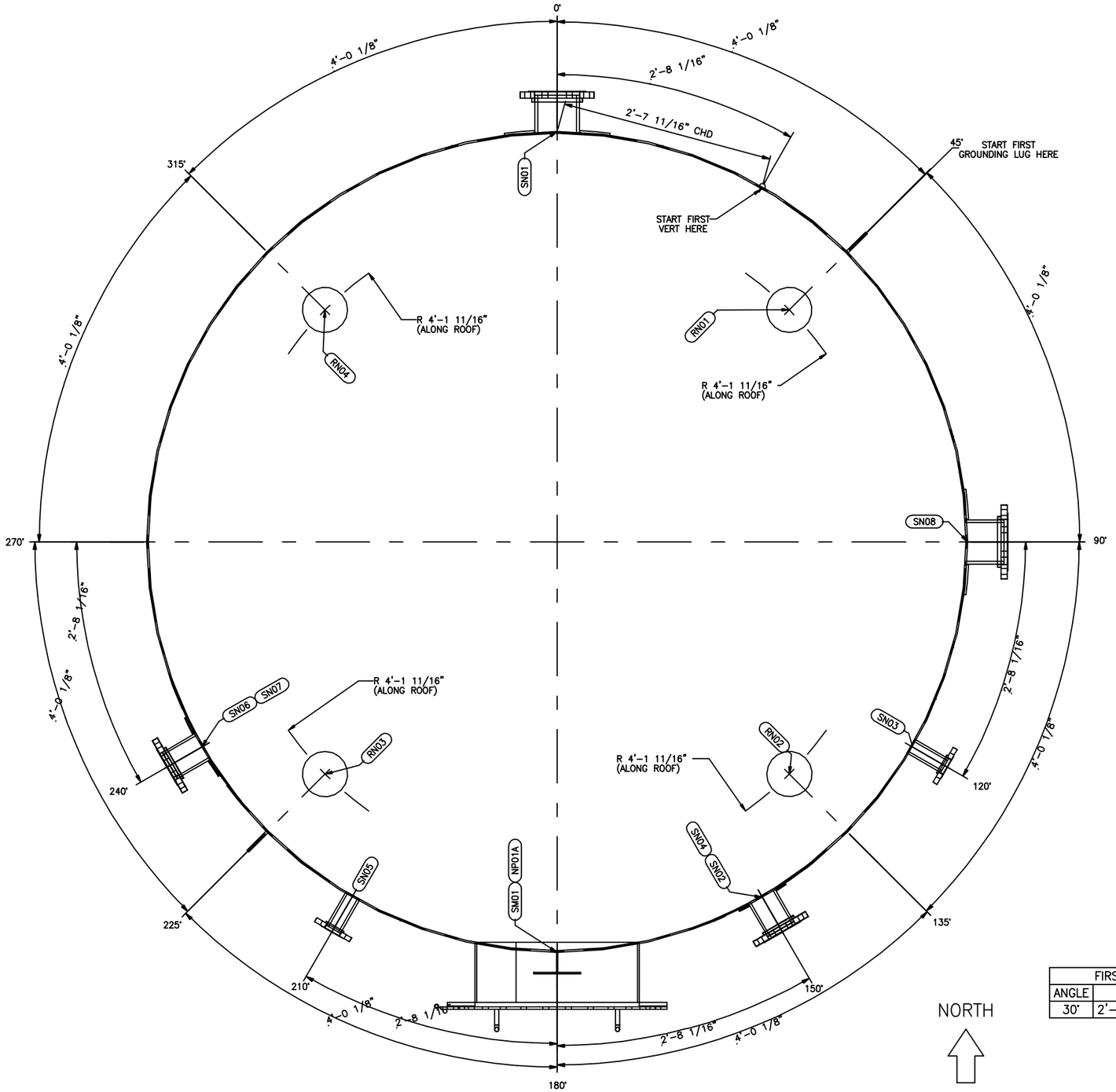

PLAN VIEW APPURTENANCE								
MARK	CUST. MARK	DESCRIPTION	OUTSIDE PROJ	INSIDE PROJ	ORIENT	RADIUS	REMARKS	REF DWG
RN01	A	6" FILL NOZZLE	6"	0"	45°	4'-1"		RN01
RN02	B	6" FILL NOZZLE	6"	0"	135°	4'-1"		RN02
RN03	C	6" VENT NOZZLE	6"	0"	225°	4'-1"		RN03
RN04	D	6" SPARE NOZZLE	6"	0"	315°	4'-1"		RN04

NOTE 1: RADIUS SHOWN IS HORIZONTAL

ELEVATION VIEW APPURTENANCE								
MARK	CUST. MARK	DESCRIPTION	OUTSIDE PROJ	INSIDE PROJ	ORIENT	ELEVATION	REMARKS	REF DWG
NP01A		NAME PLATE	--	--	180°	4'-0"		NP01
NP01B		GROUNDING LUGS	4"	0"	SEE TABLE	1'-0"		NP01
PS01		LIFTING LUG	--	--	120°	10'-6 3/4"		LL01
PS02		LIFTING LUG	--	--	300°	10'-6 3/4"		LL01
SM01	I	24" SHELL MANWAY	8"	0"	180°	1'-6"	W/ HINGE	SM01
SN01	E	6" DISCHARGE NOZZLE	6"	0"	0°	1'-0"		SN01
SN02	G	4" LEVEL NOZZLE	6"	0"	150°	8'-4"		SN02
SN03	F	2" DRAIN NOZZLE	6"	0"	120°	6"		SN03
SN04	H	4" LEVEL NOZZLE	6"	0"	150°	2'-1"		SN04
SN05	J	2" LEVEL NOZZLE	6"	0"	210°	2'-1"		SN05
SN06	K	4" SPARE NOZZLE	6"	0"	240°	8'-4"		SN06
SN07	L	4" SPARE NOZZLE	6"	0"	240°	2'-1"		SN07
SN08	M	6" SPARE NOZZLE	6"	0"	90°	1'-0"		SN08

NOTE 2: ELEVATIONS SHOWN FROM TOP OF TANK BOTTOM AT THE LOCATION OF THE APPURTENANCE.

NOTE 3: ARC DIMENSIONS CALCULATED ON THE OUTSIDE OF THE FIRST SHELL COURSE.

NOTE 4: CHORD DIMENSIONS CALCULATED ON OUTSIDE OF THE FIRST SHELL COURSE.

			FIRST RING VERTICAL SEAMS			GROUNDING LUGS		
			ANGLE	ARC	CHORD FROM 0 DEG.	ANGLE	ARC	ELEV
			30°	2'-8 1/16"	2'-7 3/4"	225°	20'-0 1/2"	1'-0"

REV.	ISSUE	BY	DATE	DESCRIPTION
0	01	NP	JAN. 2016	SUBMITTAL FOR APPROVAL

DESIGNED BY: -
DRAWN BY: -
SHEET CHK'D BY: -
SHEET CHK'D BY: -
APPROVED BY: -
DATE: -

BMT
BROWN-MINNEAPOLIS TANK
C & E, INC.
6301 BROADWAY BLVD SE
ALBUQUERQUE - NM 87105
505-563-4800

6000 GALLON WATER STORAGE TANKS
T-210 & T-216
10'-2" ID x 11'-0" HEIGHT
TECHSAS, INC
4919 WEST BAYSHORE DRIVE
BACLIFF, TEXAS 77518

TANK ORIENTATION T-210

TYPE: AWWA-D100-11 | SCALE: AS SHOWN | JOB: 20099

SHEET No. E02

OF: 3 OF 34

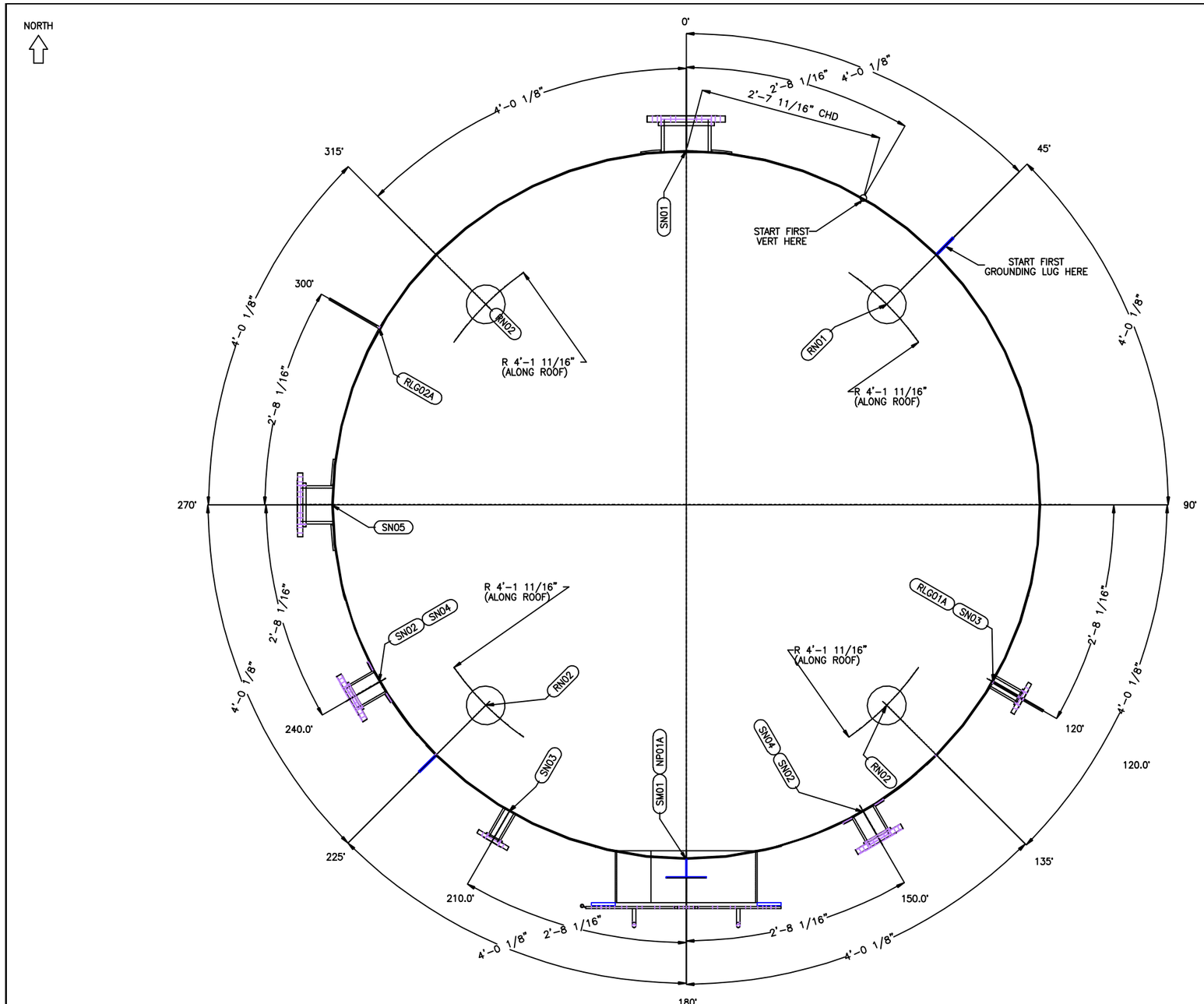

PLAN VIEW APPURTENANCE								
MARK	CUST. MARK	DESCRIPTION	OUTSIDE PROJ	INSIDE PROJ	ORIENT	RADIUS	REMARKS	REF DWG
RN01		6" ROOF NOZZLE – A	8"	0"	45'	4'–1"	RADIAL	RN01
RN02		6" ROOF NOZZLE – C	6"	1 1/8"	225'	4'–1"	RADIAL	RN02
RN02		6" ROOF NOZZLE – D	6"	1 1/8"	315'	4'–1"	RADIAL	RN02
RN02		6" ROOF NOZZLE – B	6"	1 1/8"	135'	4'–1"	RADIAL	RN02

NOTE 1: RADIUS SHOWN IS HORIZONTAL

ELEVATION VIEW APPURTENANCE								
MARK	CUST. MARK	DESCRIPTION	OUTSIDE PROJ	INSIDE PROJ	ORIENT	ELEVATION	REMARKS	REF DWG
NP01A		NAME PLATE	--	--	180'	4'–0"		NP01
RLG01A		LIFTING LUG – A	--	--	120'	0"		RLG01
RLG02A		LIFTING LUG – B	--	--	300'	0"		RLG01
SGL01B		GROUNDING LUGS	4"	0"	SEE TABLE	1'–0"		GL01
SM01		24" SHELL MANWAY	8"	0"	180'	1'–6"	W/ HINGE	SM01
SN01		8" SHELL NOZZLE	6"	0"	0'	1'–0"		SN01
SN02		4" SHELL NOZZLE	6"	0"	240'	8'–4"		SN02
SN02		4" SHELL NOZZLE	6"	0"	150'	8'–4"		SN02
SN03		2" SHELL NOZZLE	6"	0"	120'	6"		SN03
SN03		2" SHELL NOZZLE	6"	0"	210'	2'–1"		SN03
SN04		4" SHELL NOZZLE	6"	0"	240'	2'–1"		SN04
SN04		4" SHELL NOZZLE	6"	0"	150'	2'–1"		SN04
SN05		6" SHELL NOZZLE	6"	0"	270'	1'–0"		SN05

NOTE 2: ELEVATIONS SHOWN FROM TOP OF TANK BOTTOM AT THE LOCATION OF THE APPURTENANCE.
NOTE 3: ARC DIMENSIONS CALCULATED ON THE OUTSIDE OF THE FIRST SHELL COURSE.
NOTE 4: FABRICATION TOLERANCE PER API 650, SECTION 7.5.
NOTE 5: CHORD DIMENSIONS CALCULATED ON OUTSIDE OF THE FIRST SHELL COURSE.

FIRST RING VERTICAL SEAMS			GROUNDING LUGS		
			ANGLE	ARC	ELEV
ANGLE	ARC	CHORD FROM 0 DEG.	45'	4'–0 1/8"	1'–0"
30'	2'–8 1/16"	2'–7 3/4"	225'	20'–0 1/2"	1'–0"

NO.	REVISION DESCRIPTION	DRAWN BY	CHECKED BY	DATE
0				

BROWN-MINNEAPOLIS TANK
C & E, INC.
8301 BROADWAY BLVD SE
ALBUQUERQUE - NM 87105
505-583-4800

TITLE: TANK ORIENTATION T–216		JOB NO. 20099	REVISION NO. 0
CUSTOMER: TECHSAS, INC.			DRAWING NO. E02–A
LOCATION:	TANK NO.: 1		
DRNN. BY: GVallo	CHK. BY:	DIA.: 10'–2"	SHEET NO. 4 OF 34
APVD. BY:	DATE: 31–Mar–2016	HT.: 11'–0"	

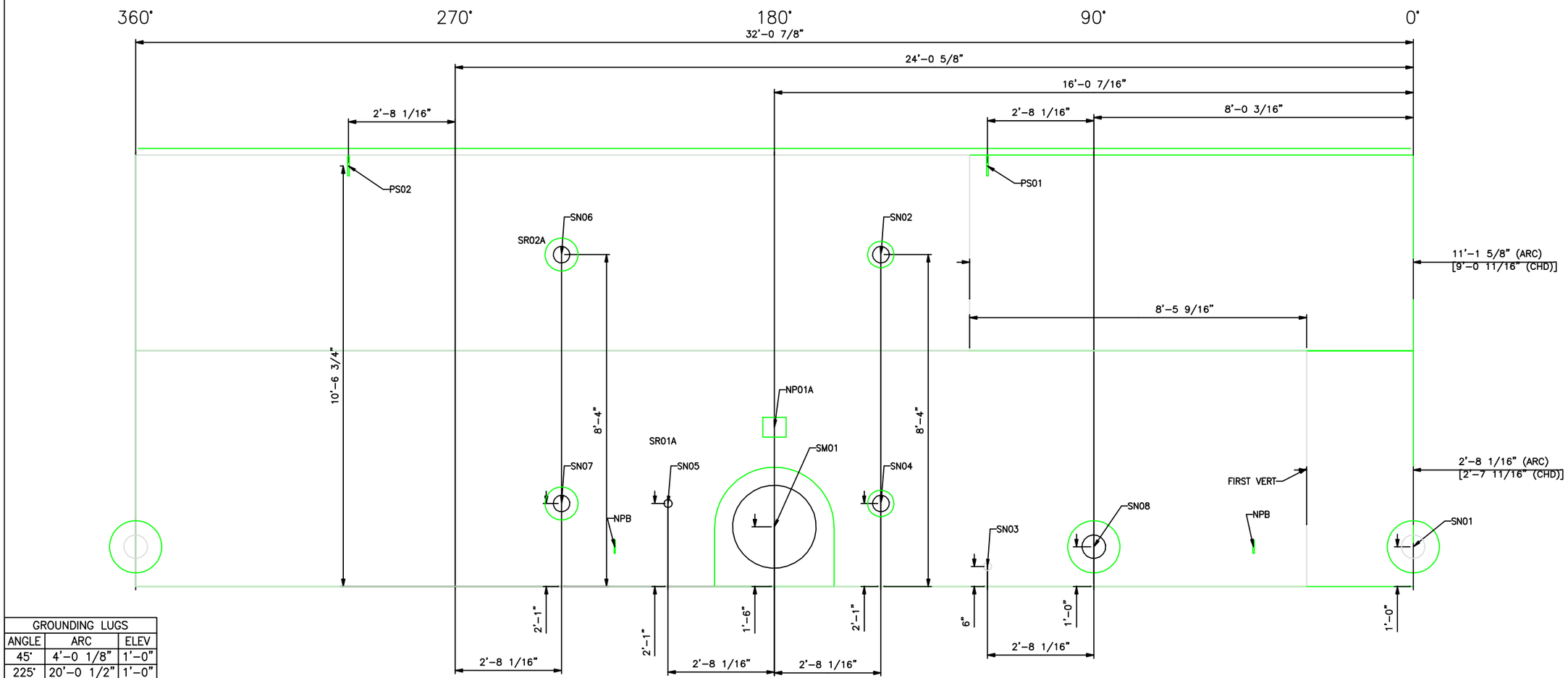

GROUNDING LUGS		
ANGLE	ARC	ELEV
45°	4'-0 1/8"	1'-0"
225°	20'-0 1/2"	1'-0"

ELEVATION VIEW APPURTENANCE

MARK	CUST. MARK	DESCRIPTION	OUTSIDE PROJ	INSIDE PROJ	ORIENT	ELEVATION	REMARKS	REF DWG
NP01A		NAME PLATE	--	--	180°	4'-0"		NP01
NP01B		GROUNDING LUGS	4"	0"	SEE TABLE	1'-0"		NP01
PS01		LIFTING LUG	--	--	120°	10'-6 3/4"		ERROR
PS02		LIFTING LUG	--	--	300°	10'-6 3/4"		ERROR
SM01	I	24" SHELL MANWAY	8"	0"	180°	1'-6"	W/ HINGE	SM01
SN01	E	6" DISCHARGE NOZZLE	6"	0"	0°	1'-0"		SN01
SN02	G	4" LEVEL NOZZLE	6"	0"	150°	8'-4"		SN02
SN03	F	2" DRAIN NOZZLE	6"	0"	120°	6"		SN03
SN04	H	4" LEVEL NOZZLE	6"	0"	150°	2'-1"		SN04
SN05	J	2" LEVEL NOZZLE	6"	0"	210°	2'-1"		SN05
SN06	K	4" SPARE NOZZLE	6"	0"	240°	8'-4"		SN06
SN07	L	4" SPARE NOZZLE	6"	0"	240°	2'-1"		SN07
SN08	M	6" SPARE NOZZLE	6"	0"	90°	1'-0"		SN08

NOTE 1: SHELL PLATE IS TO BE STACKED FLUSH INSIDE.
NOTE 2: ELEVATIONS SHOWN FROM TOP OF TANK BOTTOM AT THE LOCATION OF THE APPURTENANCE.
NOTE 3: ARC DIMENSIONS CALCULATED ON THE OUTSIDE OF THE FIRST SHELL RING.

REV.	ISSUE	BY	DATE	DESCRIPTION
0	01	NP	JAN. 2016	SUBMITTAL FOR APPROVAL

DESIGNED BY: -
DRAWN BY: -
SHEET CHK'D BY: -
SHEET CHK'D BY: -
APPROVED BY: -
DATE: -

BROWN-MINNEAPOLIS TANK
C & E, INC.
8301 BROADWAY BLVD SE
ALBUQUERQUE - NM 87105
505-583-4800

6000 GALLON WATER STORAGE TANKS
T-210 & T-216
10'-2" ID x 11'-0" HEIGHT
TECHSAS, INC
4619 WEST BAYSHORE DRIVE
BACLIFF, TEXAS 77518

SHELL LAYOUT T-210

SHEET No. E03

TYPE: AWWA-D100-11 | SCALE: AS SHOWN | JOB: 20099 | OF: 5 0F 34

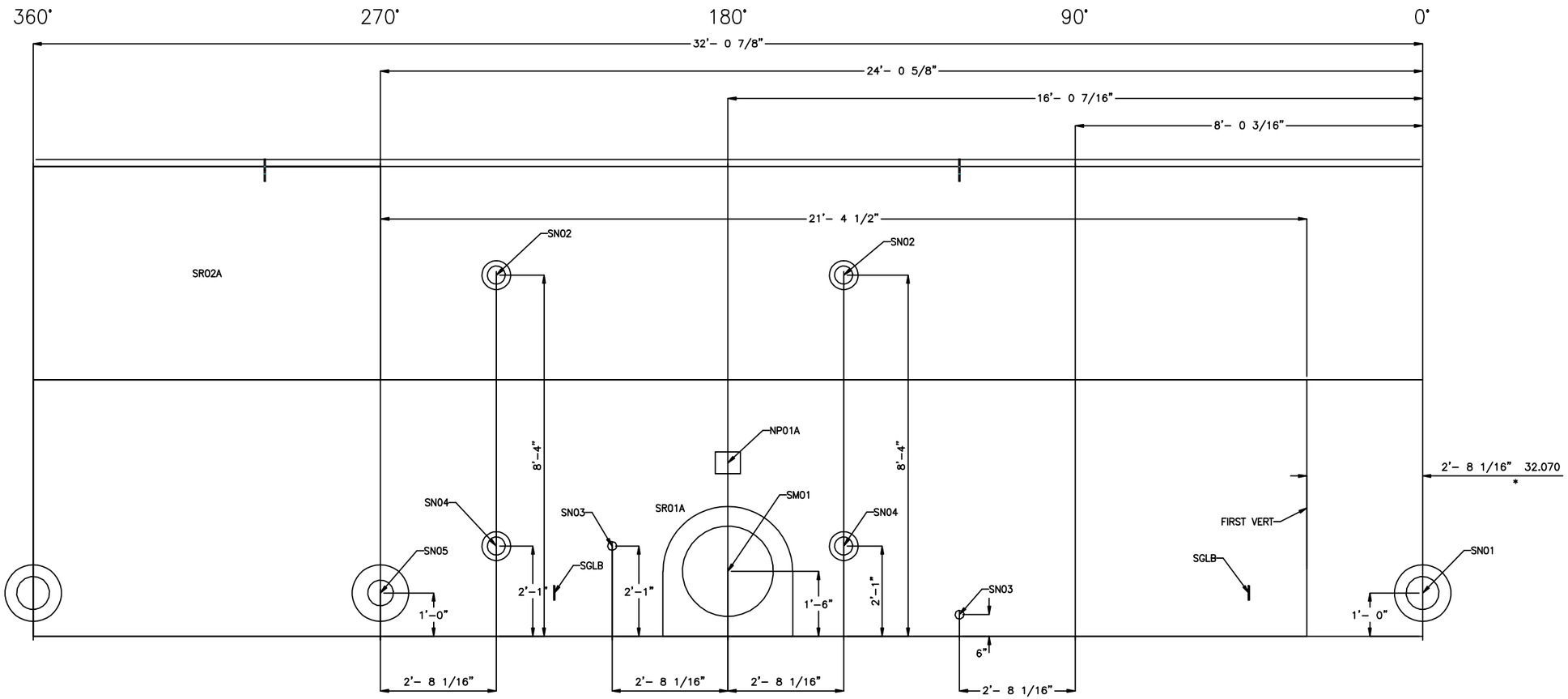

GROUNDING LUGS		
ANGLE	ARC	ELEV
45°	4'–0 1/8"	1'–0"
225°	20'–0 1/2"	1'–0"

ELEVATION VIEW APPURTENANCE

MARK	CUST. MARK	DESCRIPTION	OUTSIDE PROJ	INSIDE PROJ	ORIENT	ELEVATION	REMARKS	REF DWG
NP01A		NAME PLATE	--	--	180°	4'–0"		NP01
RLG01A		LIFTING LUG – A	--	--	120°	0"		RLG01
RLG02A		LIFTING LUG – B	--	--	300°	0"		RLG01
SGL01B		GROUNDING LUGS	4"	0"	SEE TABLE	1'–0"		GL01
SM01		24" SHELL MANWAY	8"	0"	180°	1'–6"	W/ HINGE	SM01
SN01		8" SHELL NOZZLE	6"	0"	0°	1'–0"		SN01
SN02		4" SHELL NOZZLE	6"	0"	240°	8'–4"		SN02
SN02		4" SHELL NOZZLE	6"	0"	150°	8'–4"		SN02
SN03		2" SHELL NOZZLE	6"	0"	120°	6"		SN03
SN03		2" SHELL NOZZLE	6"	0"	210°	2'–1"		SN03
SN04		4" SHELL NOZZLE	6"	0"	240°	2'–1"		SN04
SN04		4" SHELL NOZZLE	6"	0"	150°	2'–1"		SN04
SN05		6" SHELL NOZZLE	6"	0"	270°	1'–0"		SN05

NOTE 1: SHELL PLATE IS TO BE STACKED FLUSH INSIDE.
NOTE 2: ELEVATIONS SHOWN FROM TOP OF TANK BOTTOM AT THE LOCATION OF THE APPURTENANCE.
NOTE 3: ARC DIMENSIONS CALCULATED ON THE OUTSIDE OF THE FIRST SHELL RING.
NOTE 4: FABRICATION TOLERANCE = ± 1/8" COMPARED TO DRAWING DIMENSION UNLESS OTHERWISE NOTED.

NO.	REVISION DESCRIPTION	DRAWN BY	CHECKED BY	DATE
0				

BROWN-MINNEAPOLIS TANK
C & E, INC.
8301 BROADWAY BLVD SE
ALBUQUERQUE - NM 87105
505-563-4800

TITLE: SHELL LAYOUT FOR T–216		JOB NO. 20099	REVISION NO. 0
CUSTOMER: TECHSAS, INC.			DRAWING NO. E03–A
LOCATION:	TANK NO.: T–210 & T–216		
DRNN. BY: GVallo	CHK. BY:	DIA.: 10'–2"	SHEET NO. 6 OF 34
APVD. BY:	DATE: 31–Mar–2016	HT.: 11'–0"	

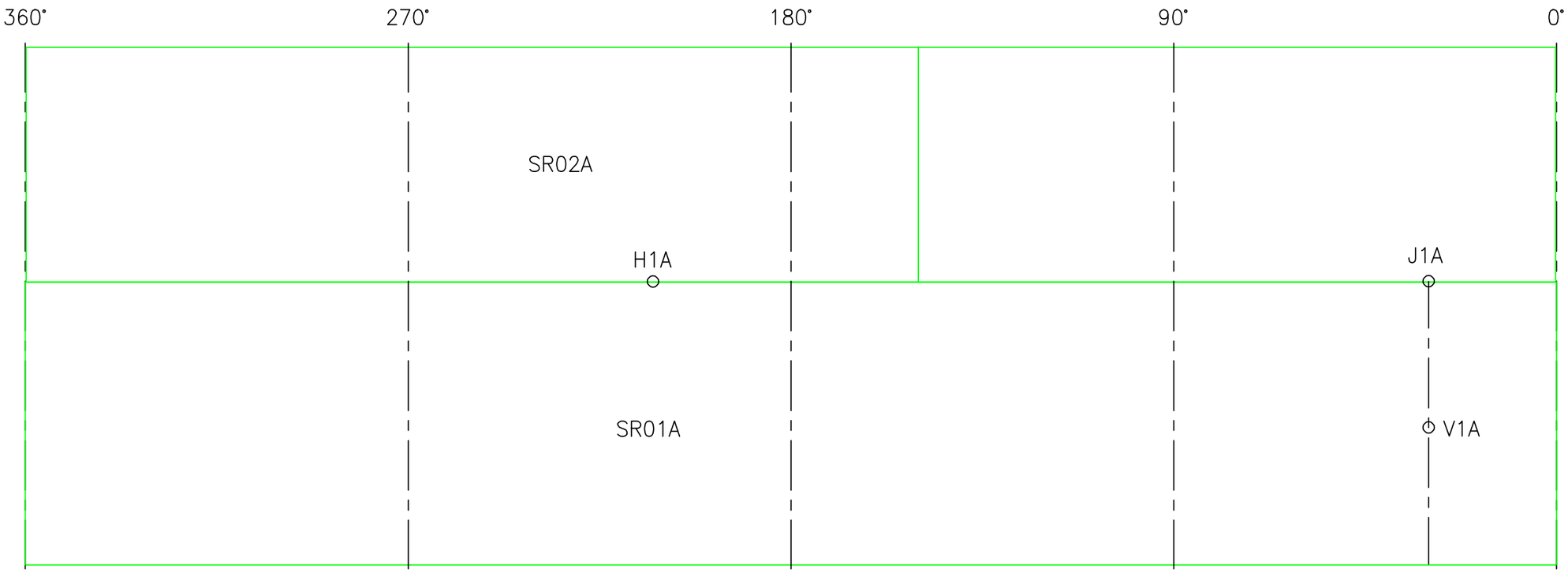

X-RAY LIST			
WELDER'S NUMBER/NAME	WELDER'S NUMBER/NAME	WELDER'S NUMBER/NAME	WELDER'S NUMBER/NAME

PLATE DIMENSIONS		
PLATE MARK	ARC LENGTH	CHORD LENGTH
SR01A	384 3/4"	1/8"
SR02A	384 5/16"	1/8"

NOTE 1: ARC LENGTHS ARE VERT TO VERT AT OUTSIDE OF SHELL.
NOTE 2: CHORD LENGTHS ARE VERT TO VERT AT OUTSIDE OF SHELL.

NOTE 1: MANDATORY X-RAYS PER API 650 ARE SHOWN.
NOTE 2: VERTICAL JOINTS REQUIRE AN X-RAY IN THE FIRST 10'-0" FOR EACH WELDER FOR EACH THICKNESS AND, WITHOUT REGARD TO THE NUMBER OF WELDERS, EACH ADDITIONAL 100'-0" OR MAJOR FRACTION OF 100'-0" OF THE SAME THICKNESS.
NOTE 3: HORIZONTAL JOINTS REQUIRE AN X-RAY IN THE FIRST 10'-0" AND ONE X-RAY FOR EACH 200'-0" OR MAJOR FRACTION OF 200'-0" FOR EACH THICKNESS WITHOUT REGARD TO THE NUMBER OF WELDERS.

WELD MARK LEGEND	
MARK	DESCRIPTION
○	X-RAY LOCATION
⊠	X-RAY ACCEPTABLE
○	X-RAY UNACCEPTABLE
○ ○	X-RAY REPAIR
○ ⊠	REPAIR ACCEPTABLE
+	TRACER LOCATION
✳	TRACER ACCEPTABLE

REV.	ISSUE	BY	DATE	DESCRIPTION
0	01	NP	JAN. 2016	SUBMITTAL FOR APPROVAL

DESIGNED BY: _____
DRAWN BY: _____
SHEET CHK'D BY: _____
SHEET CHK'D BY: _____
APPROVED BY: _____
DATE: _____

BROWN-MINNEAPOLIS TANK
C & E, INC.
8301 BROADWAY BLVD SE
ALBUQUERQUE - NM 87105
505-583-4800

6000 GALLON WATER STORAGE TANKS
T-210 & T-216
10'-2" ID x 11'-0" HEIGHT
TECHSAS, INC
4619 WEST BAYSHORE DRIVE
BACLIFF, TEXAS 77518

X-RAY MAP

SHEET No. E04

TYPE: AWWA-D100-11 | SCALE: AS SHOWN | JOB: 20099 | OF: 7 OF 34

SEAM	WELDER		REMARKS	SEAM	WELDER		REMARKS
	INSIDE	OUTSIDE			INSIDE	OUTSIDE	
1H1				1V1			
2H1				2V1			

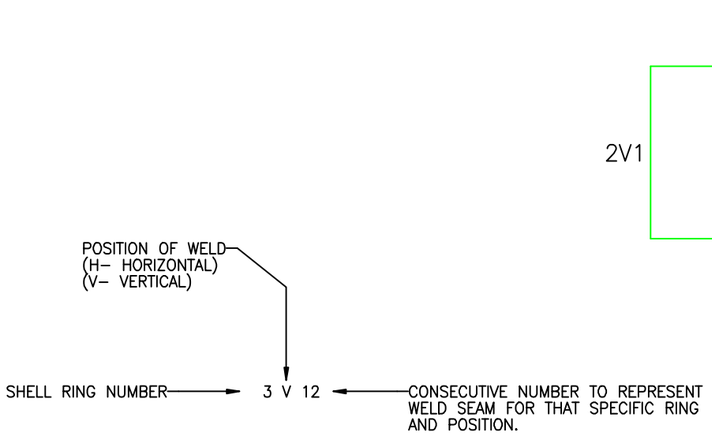

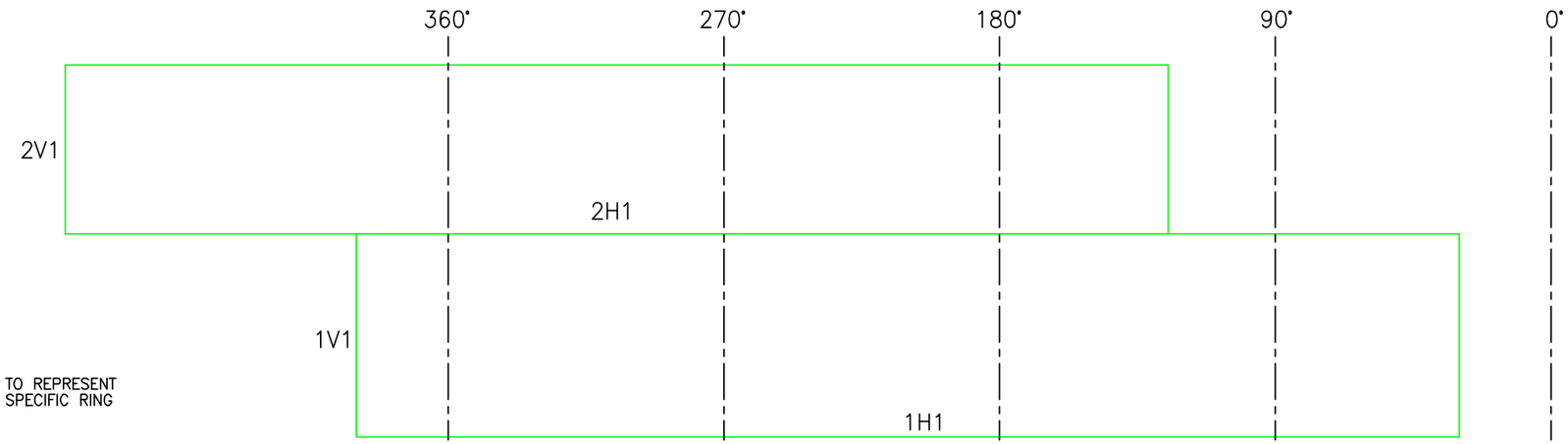

SEAM IDENTIFICATION KEY

CODE:___ _ ___ _ ___ _ ___ _ ___ _ ___ NOMINAL DIAMETER:___ _ 10'–2" _ ___

NOMINAL HEIGHT:___ _ 11'–0" _ ___

LOOKING FROM OUTSIDE TO INSIDE

FIELD FOREMAN:___ _ ___ _ ___ _ ___ _ ___ _ ___

WELDER:___ _ ___ _ ___ _ ___ _ ___ _ ___ WELDER:___ _ ___ _ ___ _ ___ _ ___ _ ___

WELDER:___ _ ___ _ ___ _ ___ _ ___ _ ___ WELDER:___ _ ___ _ ___ _ ___ _ ___ _ ___

WELDER:___ _ ___ _ ___ _ ___ _ ___ _ ___ WELDER:___ _ ___ _ ___ _ ___ _ ___ _ ___

DATE:___ _ ___ _ ___ _ ___ _ ___ _ ___

REV.	ISSUE	BY	DATE	DESCRIPTION
0	01	NP	JAN. 2016	SUBMITTAL FOR APPROVAL

DESIGNED BY: -
DRAWN BY: -
SHEET CHK'D BY: -
SHEET CHK'D BY: -
APPROVED BY: -
DATE: -

BMT

BROWN-MINNEAPOLIS TANK
C & E, INC.
8301 BROADWAY BLVD SE
ALBUQUERQUE - NM 87105
505-503-4800

6000 GALLON WATER STORAGE TANKS
T- 210 & T-216
10'-2" ID x 11'-0" HEIGHT
TECHSAS, INC
4619 WEST BAYSHORE DRIVE
BACLIFF, TEXAS 77518

SHELL WELD MAP

TYPE: AWWA-D100-11 | SCALE: AS SHOWN | JOB: 20099

SHEET No. E05

OF: 8 0F 34

SEAM	WELDER	REMARKS
HS1		

WELDER INFORMATION	
FULL NAME	INITIALS

MARK LOCATIONS	
LEAK	○
REPAIRED	⊠
RETESTED	⊠

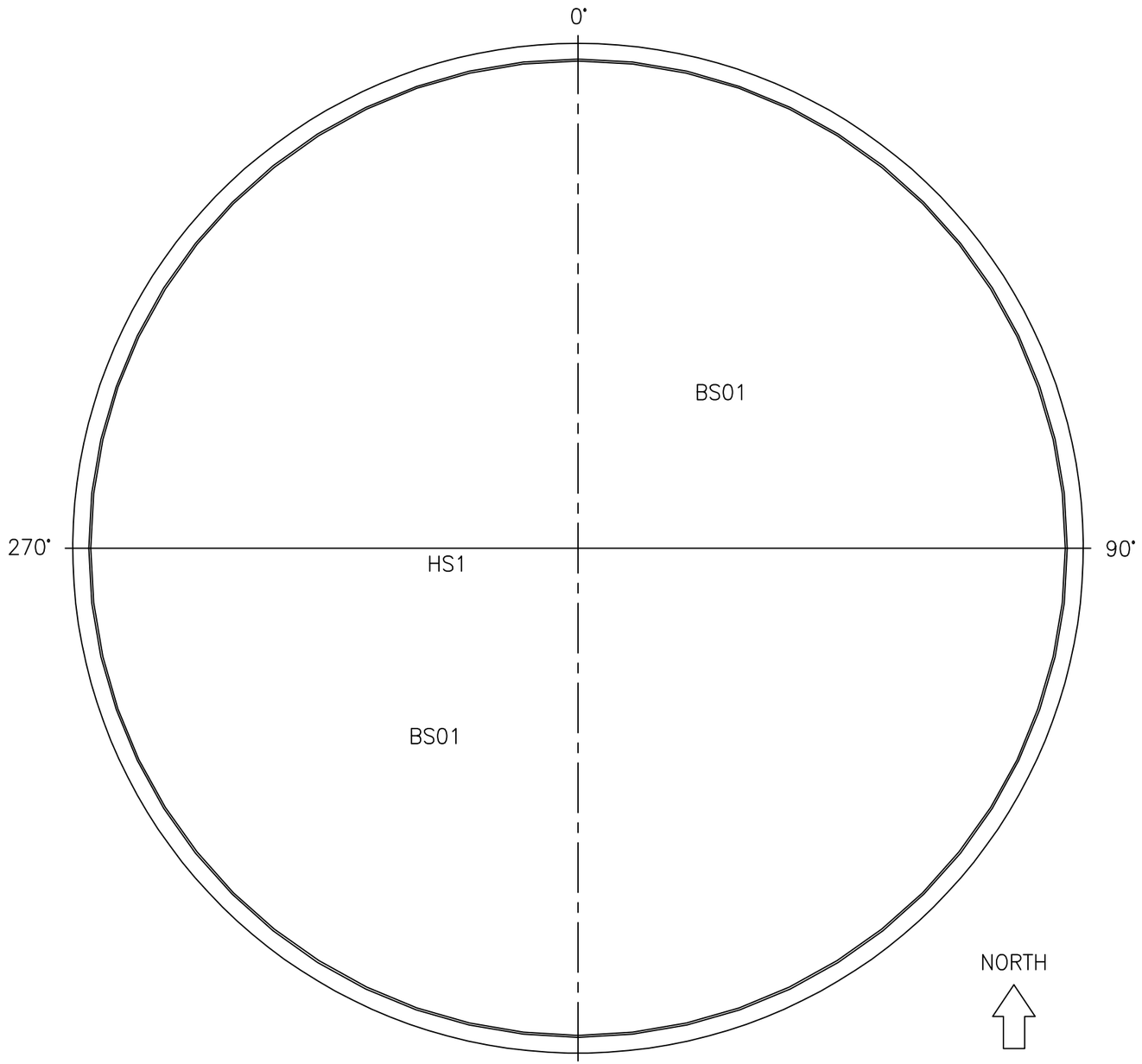

POSITION OF WELD
(H– HORIZONTAL)
(V– VERTICAL)

H 12 ← CONSECUTIVE NUMBER TO REPRESENT LINEAR WELD FOR THAT SPECIFIC BOTTOM PLATES AND POSITION

SEAM IDENTIFICATION KEY

NORTH

PLAN VIEW

REV.	ISSUE	BY	DATE	DESCRIPTION
0	01	NP	JAN. 2016	SUBMITTAL FOR APPROVAL

DESIGNED BY: -
DRAWN BY: -
SHEET CHK'D BY: -
SHEET CHK'D BY: -
APPROVED BY: -
DATE: -

BROWN-MINNEAPOLIS TANK
C & E, INC.
8301 BROADWAY BLVD SE
ALBUQUERQUE - NM 87105
505-583-4800

6000 GALLON WATER STORAGE TANKS
T-210 & T-216
10'-2" ID x 11'-0" HEIGHT
TECHSAS, INC
4619 WEST BAYSHORE DRIVE
BACLIFF, TEXAS 77518

BOTTOM WELD MAP

SHEET No. **E06**

TYPE: AWWA-D100-11 | SCALE: AS SHOWN | JOB: 20099 | OF: 9 OF 34

SEAM	WELDER	REMARKS
VS1		

WELDER INFORMATION	
FULL NAME	INITIALS

MARK LOCATIONS	
LEAK	○
REPAIRED	⊠
RETESTED	⊠

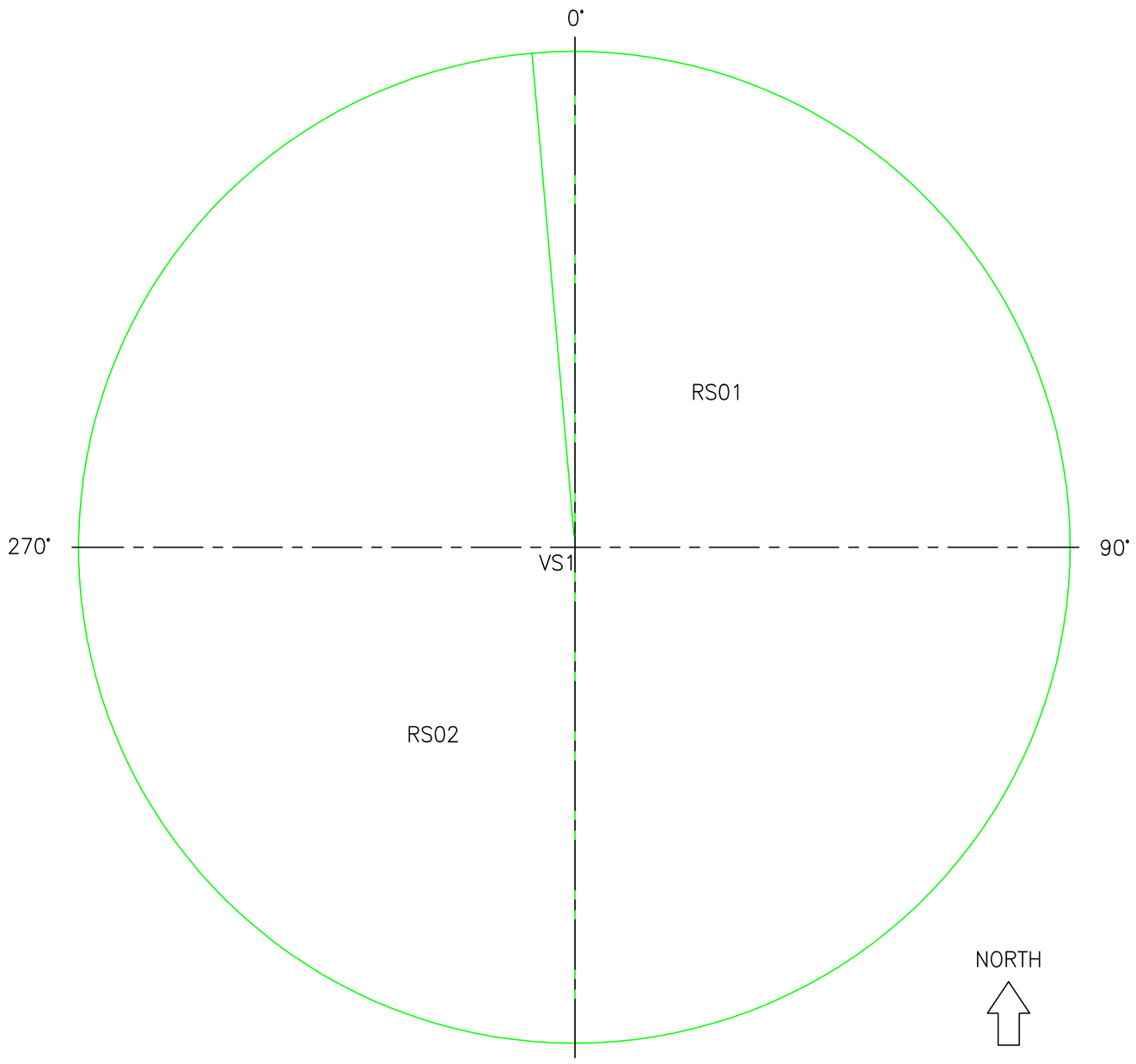

POSITION OF WELD
(H– HORIZONTAL)
(V– VERTICAL)

V 12 ← CONSECUTIVE NUMBER TO REPRESENT LINEAR WELD FOR THAT SPECIFIC BOTTOM PLATES AND POSITION

SEAM IDENTIFICATION KEY

PLAN VIEW

REV.	ISSUE	BY	DATE	DESCRIPTION
0	01	NP	JAN. 2016	SUBMITTAL FOR APPROVAL

DESIGNED BY: -
DRAWN BY: -
SHEET CHK'D BY: -
SHEET CHK'D BY: -
APPROVED BY: -
DATE: -

BMT
BROWN-MINNEAPOLIS TANK
C & E, INC.
8301 BROADWAY BLVD SE
ALBUQUERQUE - NM 87105
505-583-4800

6000 GALLON WATER STORAGE TANKS
T-210 & T-216
16'-2" ID x 11'-0" HEIGHT
TECHSAS, INC
4619 WEST BAYSHORE DRIVE
BACLIFF, TEXAS 77518

ROOF WELD MAP

TYPE: AWWA-D100-11 | SCALE: AS SHOWN | JOB: 20099

SHEET No. E07

OF: 10 0F 34

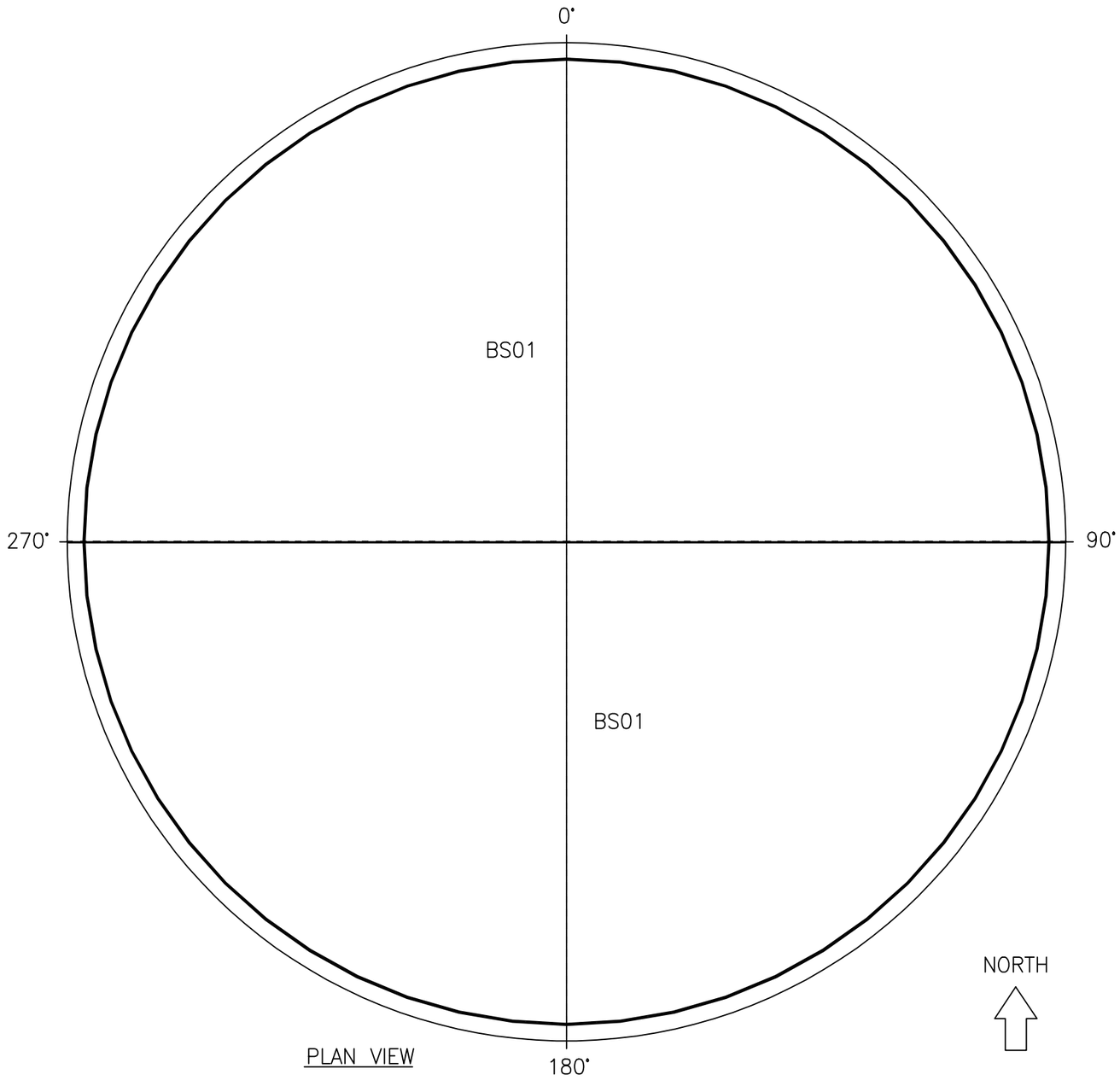

PLAN VIEW

WELDER INFORMATION	
FULL NAME	INITIALS

MARK LOCATIONS	
LEAK	○
REPAIRED	⊠
RETESTED	⊠

DATE:_____

NOTES:_____

CUSTOMER (WITNESS):_____
SIGNATURE

FIELD FOREMAN:_____
SIGNATURE

REV.	ISSUE	BY	DATE	DESCRIPTION
0	01	NP	JAN. 2016	SUBMITTAL FOR APPROVAL

DESIGNED BY: _____ -
DRAWN BY: _____ -
SHEET CHK'D BY: _____ -
SHEET CHK'D BY: _____ -
APPROVED BY: _____ -
DATE: _____ -

BMT
BROWN-MINNEAPOLIS TANK
C & E, INC.
8301 BROADWAY BLVD SE
ALBUQUERQUE - NM 87105
505-583-4800

6000 GALLON WATER STORAGE TANKS
T-210 & T-216
16'-2" ID x 11'-0" HEIGHT
TECHSAS, INC
4619 WEST BAYSHORE DRIVE
BACLIFF, TEXAS 77518

DIESEL TEST VACUUM

SHEET No. E08

TYPE: AWWA-D100-11 | SCALE: AS SHOWN | JOB: 20099 | OF: 11 0F 34

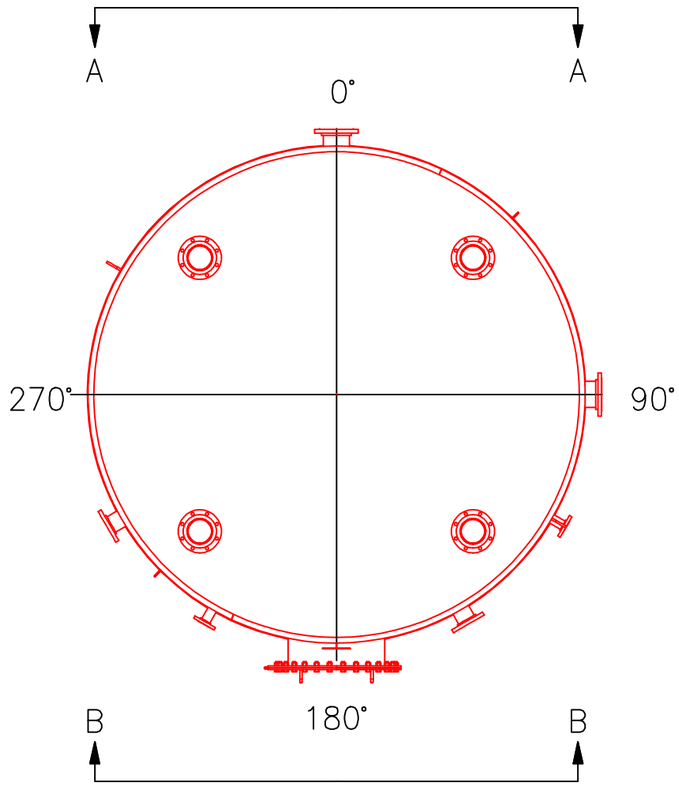

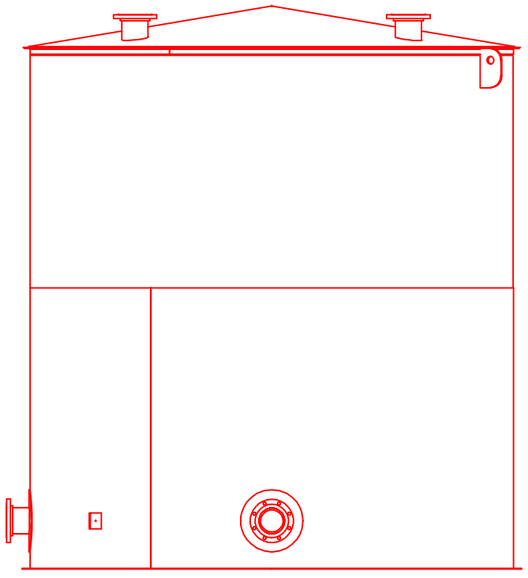

VIEW A–A

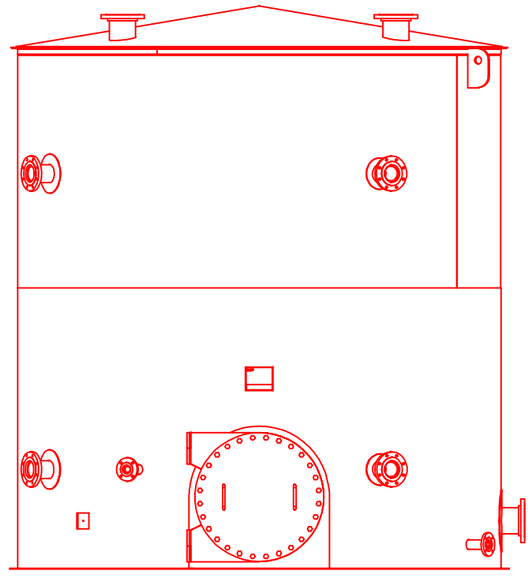

VIEW B–B

NORTH

					DESIGNED BY: -
					DRAWN BY: -
					SHEET CHK'D BY: -
0	01	NP	JAN. 2016	SUBMITTAL FOR APPROVAL	SHEET CHK'D BY: -
REV.	ISSUE	BY	DATE	DESCRIPTION	APPROVED BY: -
					DATE: -

BROWN-MINNEAPOLIS TANK
C & E, INC.
8301 BROADWAY BLVD SE
ALBUQUERQUE - NM 87105
505-503-4800

6000 GALLON WATER STORAGE TANKS
T-210 & T-216
10'-2" ID x 11'-0" HEIGHT
TECHSAS, INC
4619 WEST BAYSHORE DRIVE
BACLIFF, TEXAS 77518

TANK ELEVATIONS t-210

TYPE: AWWA-D100-11 | SCALE: AS SHOWN | JOB: 20099

SHEET No. E09

OF: 12 0F 34

NORTH

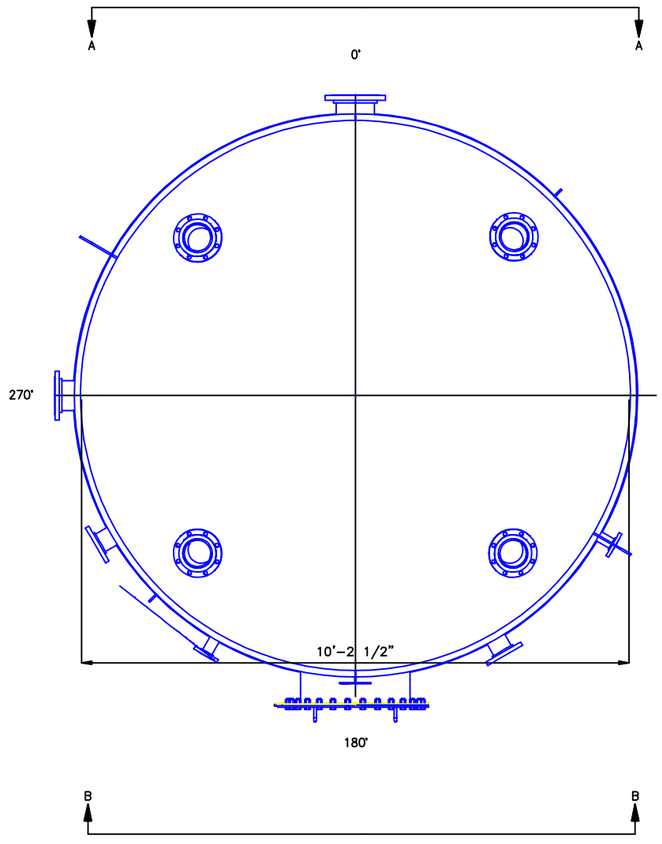

VIEW A–A

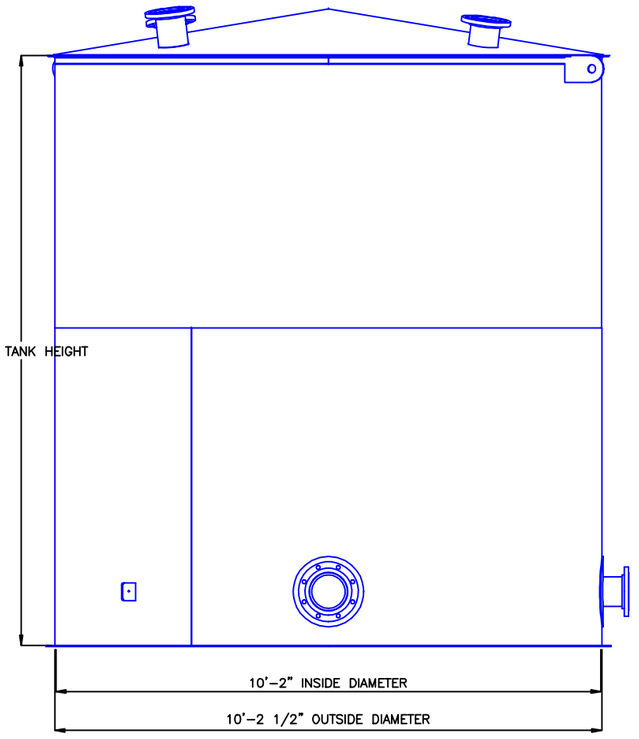

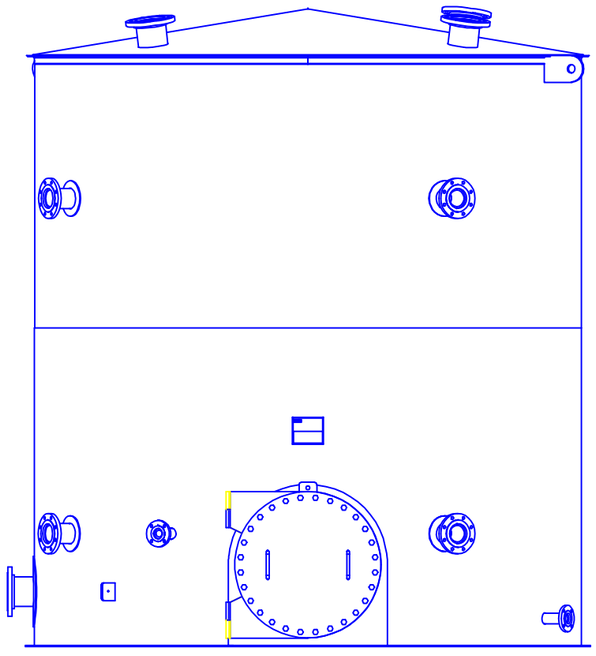

VIEW B–B

NO.	REVISION DESCRIPTION	DRAWN BY	CHECKED BY	DATE
0				

BROWN-MINNEAPOLIS TANK
C & E, INC.
8301 BROADWAY BLVD SE
ALBUQUERQUE - NM 87105
505-563-4800

TITLE: TANK ELEVATIONS FOR T–216			JOB NO. 20099
CUSTOMER: TECHSAS, INC.			DRAWING NO. E09–A
LOCATION:	TANK NO.: T–210 & T–216		
DRNN. BY: GVallo	CHK. BY:	DIA.: 10'–2"	SHEET NO. 13 of 34
APVD. BY:	DATE: 31–Mar–2016	HT.: 11'–0"	

REVISION NO. 0

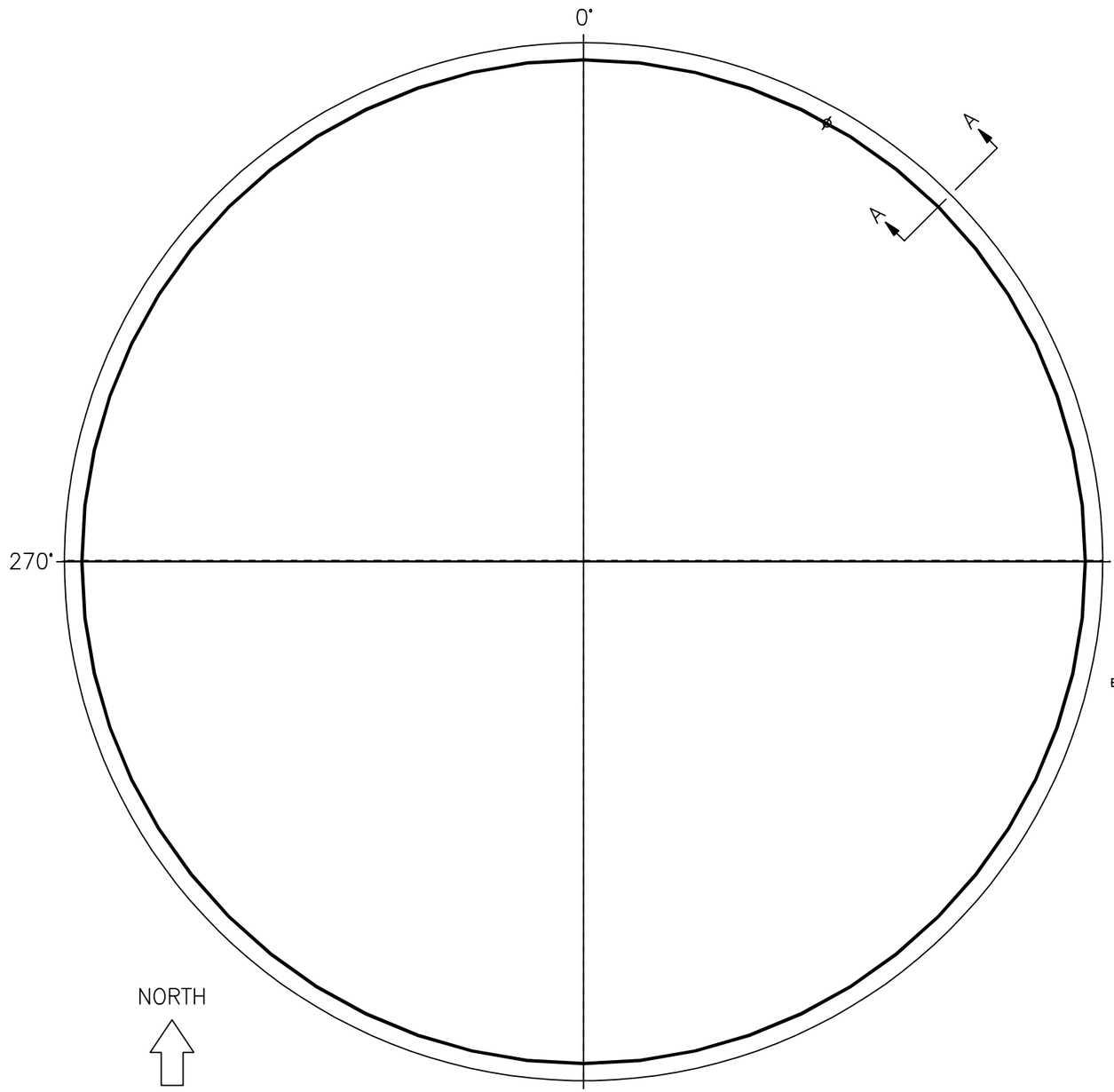

10'–6 1/2" BUTT–WELDED BOTTOM

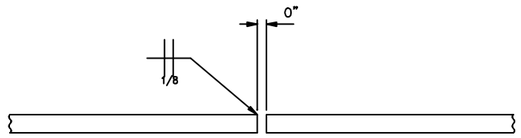

TYPICAL BUTT JOINT

SECTION A–A

REV.	ISSUE	BY	DATE	DESCRIPTION
0	01	NP	JAN. 2016	SUBMITTAL FOR APPROVAL

DESIGNED BY: -
DRAWN BY: -
SHEET CHK'D BY: -
SHEET CHK'D BY: -
APPROVED BY: -
DATE: -

BMT

BROWN-MINNEAPOLIS TANK
C & E, INC.
8301 BROADWAY BLVD SE
ALBUQUERQUE - NM 87105
505-563-4800

6000 GALLON WATER STORAGE TANKS
T-210 & T-216
10'-2" ID x 11'-0" HEIGHT
TECHSAS, INC
4619 WEST BAYSHORE DRIVE
BACLIFF, TEXAS 77518

BOTTOM LAYOUT & DETAILS

TYPE: AWWA-D100-11 | SCALE: AS SHOWN | JOB: 20099

SHEET No. BL01

OF: 14 0F 34

WORK INSTRUCTIONS								
RECV	CUT ROLL	FIT	WELDED	READY TO COAT	SENT TO VENDOR	COATING COMPLETE	READY TO SHIP	SHIPPED

BILL OF MATERIALS								
QTY	SHPG MARK	ASSY QTY	ASSY MARK	DESCRIPTION	LENGTH	SPEC MATL	REMARKS	LBS WEIGHT
2	BS01			BOTTOM PL. 1/4" x 63 3/16" x	10'-6 1/2"	A36		[889]

BILL OF MATERIALS LISTED FOR (1) TANK – (2) TANKS REQUIRED.
NOTE 1.– CUTTING RADIUS IS 5'-3 1/4"
NOTE 2.– TOTAL WEIGHT PLATES SHOWN = 889 LBS

RAW MATERIAL					
QTY	MK	PLATES	DESCRIPTION	CUT LENGTH	WEIGHT
1	BRAW-01	BS01, NIL	PL. 1/4" x 96" x 17'-5 7/8"	611 13/16"	[1427]

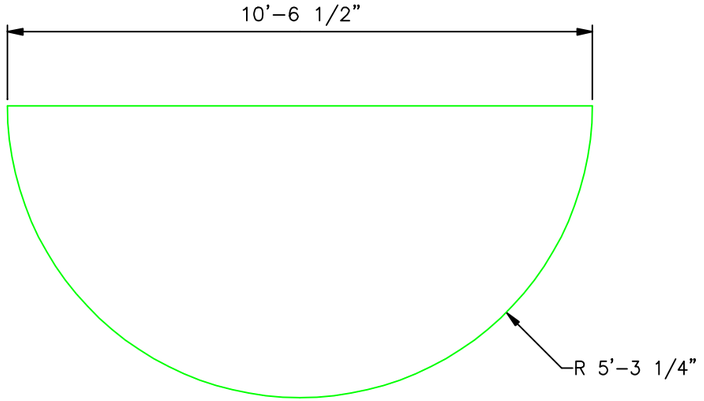

BS01 (2 REQD)

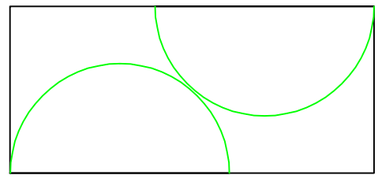

SEE RAW MATERIAL TABLE

REV.	ISSUE	BY	DATE	DESCRIPTION
0	01	NP	JAN. 2016	SUBMITTAL FOR APPROVAL

DESIGNED BY: -
DRAWN BY: -
SHEET CHK'D BY: -
SHEET CHK'D BY: -
APPROVED BY: -
DATE: -

BMT

BROWN-MINNEAPOLIS TANK
C & E, INC.
8301 BROADWAY BLVD SE
ALBUQUERQUE - NM 87105
505-583-4800

6000 GALLON WATER STORAGE TANKS
T-210 & T-216
10'-2" ID x 11'-0" HEIGHT
TECHSAS, INC
4619 WEST BAYSHORE DRIVE
BACLIFF, TEXAS 77518

BOTTOM PLATE DETAILS

TYPE: AWWA-D100-11 | SCALE: AS SHOWN | JOB: 20099

SHEET No. BL02

OF: 15 0F 34

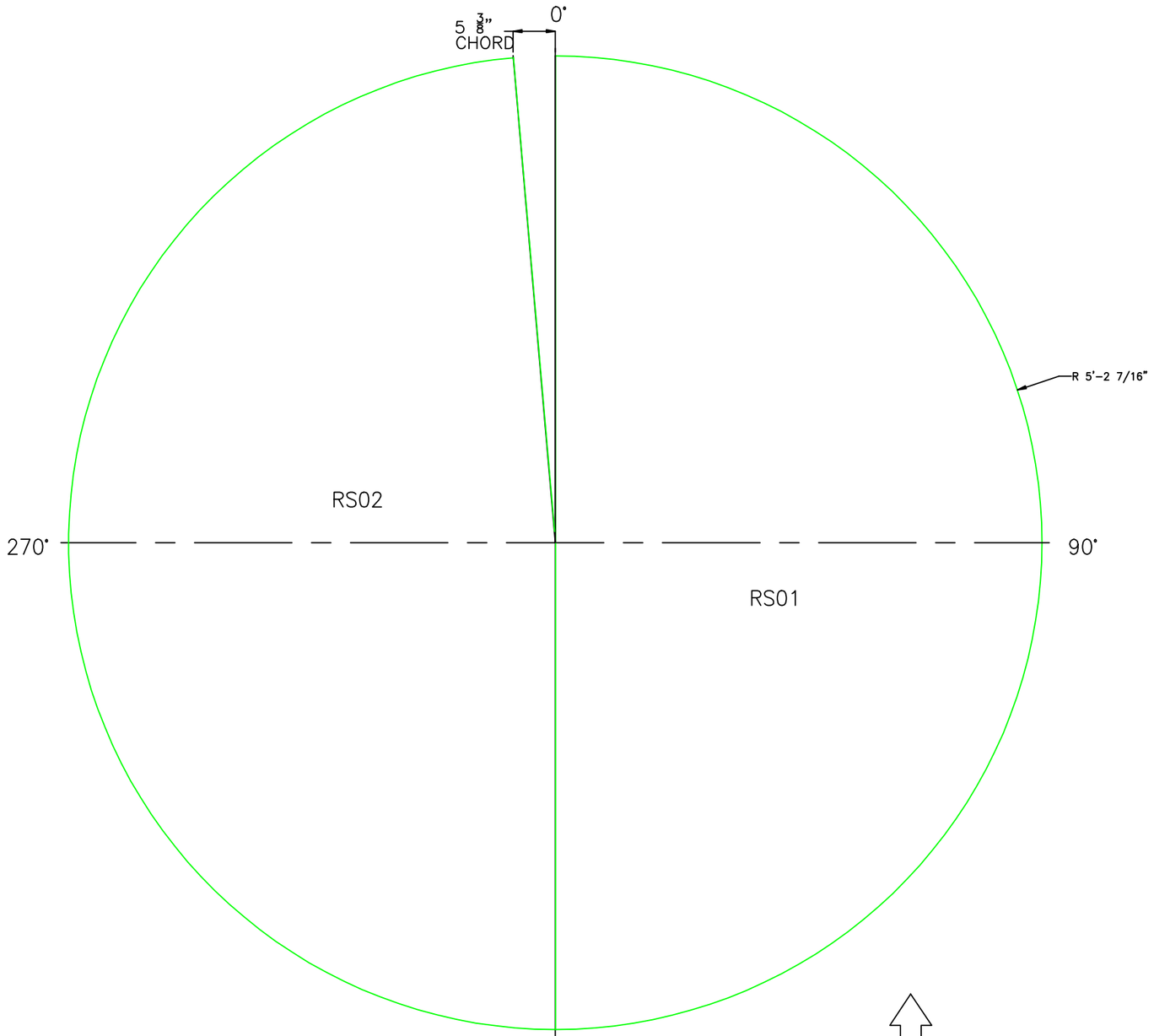

BUTT-WELDED ROOF FOR 10'-2" DIA TANK

NORTH

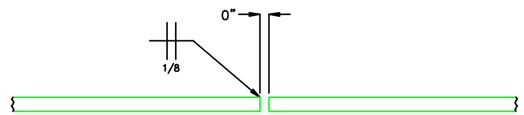

TYPICAL BUTT JOINT

REV.	ISSUE	BY	DATE	DESCRIPTION
0	01	NP	JAN. 2016	SUBMITTAL FOR APPROVAL

DESIGNED BY: -
DRAWN BY: -
SHEET CHK'D BY: -
SHEET CHK'D BY: -
APPROVED BY: -
DATE: -

BROWN-MINNEAPOLIS TANK
C & E, INC.
8301 BROADWAY BLVD SE
ALBUQUERQUE - NM 87105
505-583-4800

6000 GALLON WATER STORAGE TANKS
T-210 & T-216
10'-2" ID x 11'-0" HEIGHT
TECHSAS, INC
4619 WEST BAYSHORE DRIVE
BACLIFF, TEXAS 77518

ROOF LAYOUT & DETAIL

TYPE: AWWA-D100-11 | SCALE: AS SHOWN | JOB: 20099

SHEET No. RL01

OF: 16 0F 34

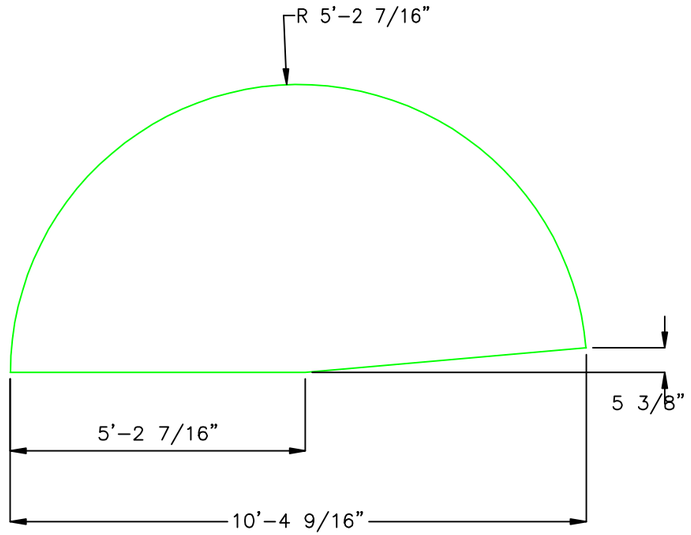

RS02 (1 REQD)

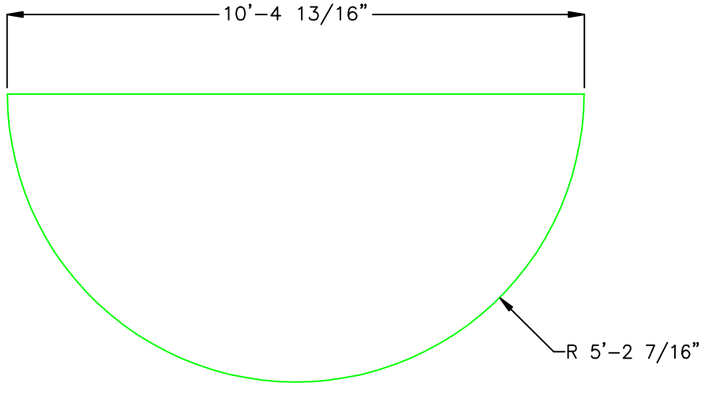

RS01 (1 REQD)

WORK INSTRUCTIONS								
RECV	CUT ROLL	FIT	WELDED	READY TO COAT	SENT TO VENDOR	COATING COMPLETE	READY TO SHIP	SHIPPED

BILL OF MATERIALS								
QTY	SHPG MARK	ASSY QTY	ASSY MARK	DESCRIPTION	LENGTH	SPEC MATL	REMARKS	LBS WEIGHT
1	RS01			ROOF PL. 3/16" x 62 7/16" x	10'-4 13/16"	A36		[325]
1	RS02			ROOF PL. 3/16" x 62 7/16" x	10'-4 9/16"	A36		[316]

BILL OF MATERIALS LISTED FOR (1) TANK – (2) TANKS REQUIRED.
NOTE 1.– CUTTING RADIUS IS 5'-2 7/16"
NOTE 2.– TOTAL WEIGHT PLATES SHOWN = 641 LBS

RAW MATERIAL					
QTY	MK	PLATES	DESCRIPTION	CUT LENGTH	WEIGHT
1	RRAW-01	rs01	PL. 3/16" x 96" x 17'-1 5/8"	603 3/16"	[1049]

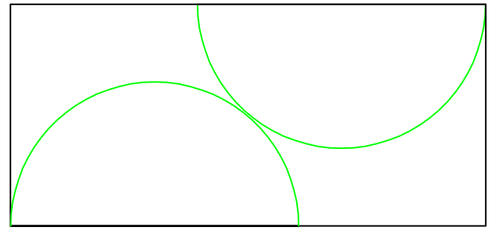

SEE RAW MATERIAL TABLE

REV.	ISSUE	BY	DATE	DESCRIPTION
0	01	NP	JAN. 2016	SUBMITTAL FOR APPROVAL

DESIGNED BY: -
DRAWN BY: -
SHEET CHK'D BY: -
SHEET CHK'D BY: -
APPROVED BY: -
DATE: -

BROWN-MINNEAPOLIS TANK
C & E, INC.
8301 BROADWAY BLVD SE
ALBUQUERQUE - NM 87105
505-583-4800

6000 GALLON WATER STORAGE TANKS
T-210 & T-216
10'-2" ID x 11'-0" HEIGHT
TECHSAS, INC
4619 WEST BAYSHORE DRIVE
BACLIFF, TEXAS 77518

ROOF PLATE DETAILS

SHEET No. RL02

TYPE: AWWA-D100-11 | SCALE: AS SHOWN | JOB: 20099 | OF: 17 OF 34

WORK INSTRUCTIONS								
RECV	CUT ROLL	FIT	WELDED	READY TO COAT	SENT TO VENDOR	COATING COMPLETE	READY TO SHIP	SHIPPED

BILL OF MATERIALS								
QTY	SHPG MARK	ASSY QTY	ASSY MARK	DESCRIPTION	LENGTH	SPEC MATL	REMARKS	LBS WEIGHT
2	TM01			ANGLE 2" x 2" x 1/4" x	18'–0"	A36	ROLL	[101]

BILL OF MATERIALS LISTED FOR (1) TANK – (2) TANKS REQUIRED.
NOTE 1: ALL ROLLED MEMBERS ARE CUT FROM 20'–0" STOCK LENGTHS.

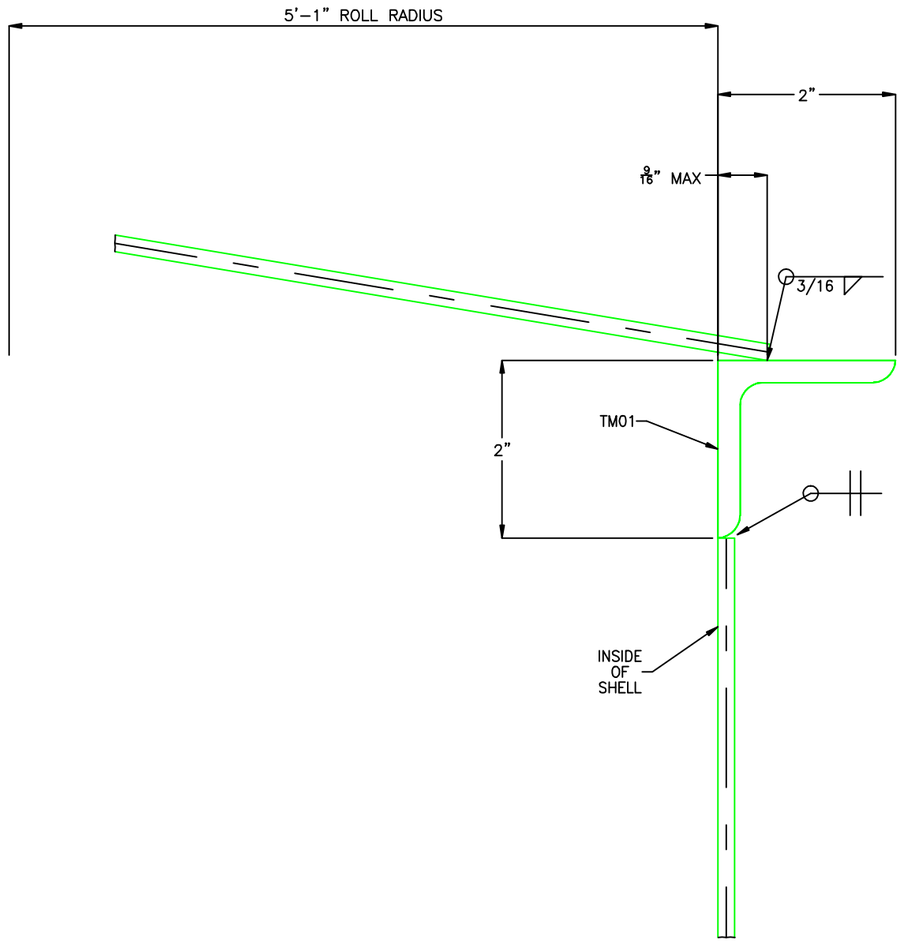

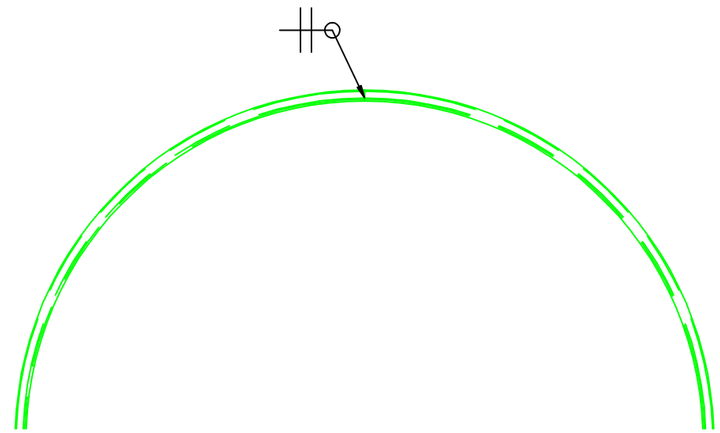

SEGMENT TO SEGMENT WELDING DETAIL

REV.	ISSUE	BY	DATE	DESCRIPTION
0	01	NP	JAN. 2016	SUBMITTAL FOR APPROVAL

DESIGNED BY: -
DRAWN BY: -
SHEET CHK'D BY: -
SHEET CHK'D BY: -
APPROVED BY: -
DATE: -

BMT

BROWN-MINNEAPOLIS TANK
C & E, INC.
8301 BROADWAY BLVD SE
ALBUQUERQUE - NM 87105
505-583-4800

6000 GALLON WATER STORAGE TANKS
T-210 & T-216
10'-2" ID x 11'-0" HEIGHT
TECHSAS, INC
4619 WEST BAYSHORE DRIVE
BACLIFF, TEXAS 77518

TOP MEMBER

TYPE: AWWA-D100-11 | SCALE: AS SHOWN | JOB: 20099

SHEET No. TM01

OF: 18 0F 34

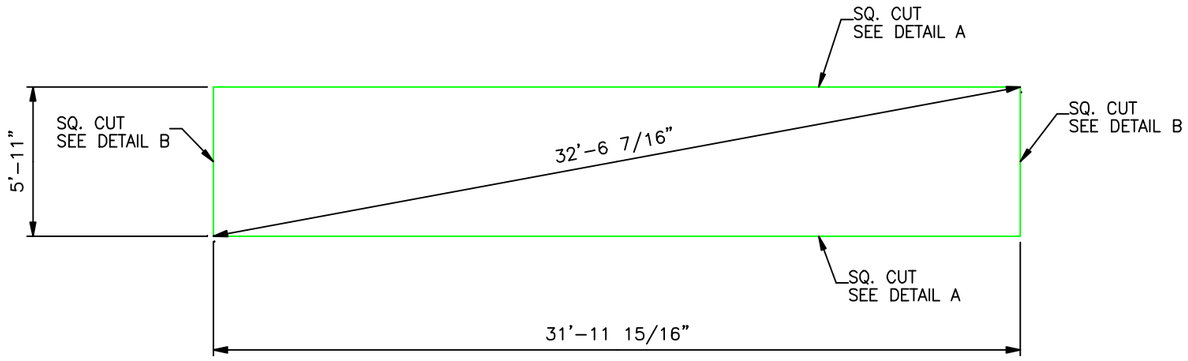

MK. SR01A (1 REQ'D)

WORK INSTRUCTIONS								
RECV	CUT ROLL	FIT	WELDED	READY TO COAT	SENT TO VENDOR	COATING COMPLETE	READY TO SHIP	SHIPPED

BILL OF MATERIALS								
QTY	SHPG MARK	ASSY QTY	ASSY MARK	DESCRIPTION	LENGTH	SPEC MATL	REMARKS	LBS WEIGHT
1	SR01A			SHELL PL. 0.2500" x 71" x	31'-11 15/16"	A36	ROLL	[1933]
1	SR02A			SHELL PL. 0.1875" x 59" x	31'-11 3/4"	A36	ROLL	[1204]

BILL OF MATERIALS LISTED FOR (1) TANK – (2) TANKS REQUIRED.

NOTE 1: DIMENSIONS SHOWN ARE BEFORE ROLLING.

NOTE 2: ALL DETAIL DIMENSIONS ARE ROUNDED TO THE NEAREST 1/16".

NOTE 3: ROLL ALL SHELL PLATES TO 5'-1" INSIDE RADIUS.

NOTE 4: FABRICATION TOLERANCE FOR BEVEL ANGLE AT PLATE EDGE IS -5°, +5°.

NOTE 5: 1/8" DEDUCTED FROM LENGTH FOR WELD GAP.

NOTE 6: TOTAL WEIGHT PLATES SHOWN = 3137 LBS

NOTE 7: THE LENGTH OF THE PLATES IS CALCULATED USING THE CENTER OF DIAMETER OF THE TANK (ALIGN CENTERS).

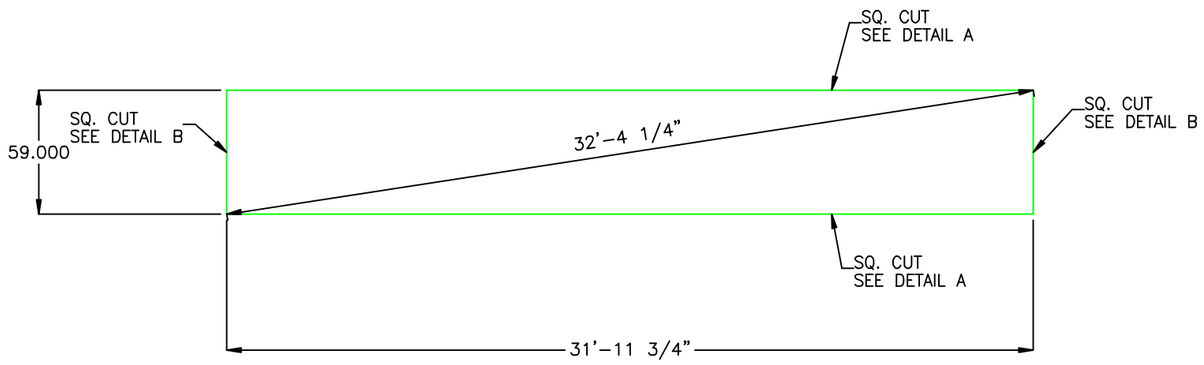

MK. SR02A (1 REQ'D)

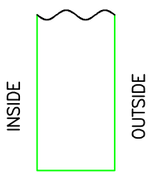

DETAIL A

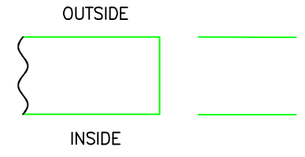

DETAIL B

REV.	ISSUE	BY	DATE	DESCRIPTION
0	01	NP	JAN. 2016	SUBMITTAL FOR APPROVAL

DESIGNED BY: -
DRAWN BY: -
SHEET CHK'D BY: -
SHEET CHK'D BY: -
APPROVED BY: -
DATE: -

BROWN-MINNEAPOLIS TANK
C & E, INC.
8301 BROADWAY BLVD SE
ALBUQUERQUE - NM 87105
505-583-4800

6000 GALLON WATER STORAGE TANKS
T-210 & T-216
16'-2" ID x 11'-0" HEIGHT
TECHSAS, INC
4619 WEST BAYSHORE DRIVE
BACLIFF, TEXAS 77518

SHELL COURSE PLATES

SHEET No. PL01

TYPE: AWWA-D100-11 | SCALE: AS SHOWN | JOB: 20099 | OF: 19 0F 34

NOTES

1.– AFTER INSTALLATION, AIR TEST REPAD WELDS TO 15 PSI PER API–650–5.3.4.
2.– AFTER THE REINFORCING PAD(S) HAVE BEEN TESTED, THE 1/4" DRILLED AND TAPED HOLE(S) MUST REMAIN OPEN (NO PLUGS, GREASE, PAINT OR ANY OTHER FOREIGN MATERIAL PLUGGING THE 1/4" TEST HOLE).
3.– GASKETED FACES SHALL BE MACHINE FINISHED TO PROVIDE A MINIMUM GASKET BEARING WIDTH OF 3/4".
4.– BOLT HOLES TO STRADDLE TANKS VERTICAL CENTERLINE.

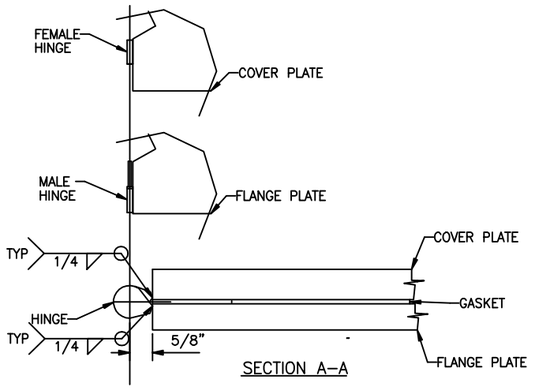

SECTION A–A

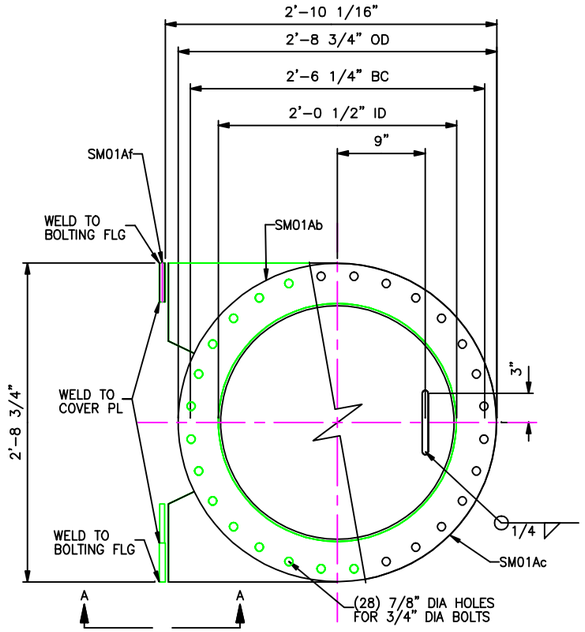

FLANGE/COVER ASSY

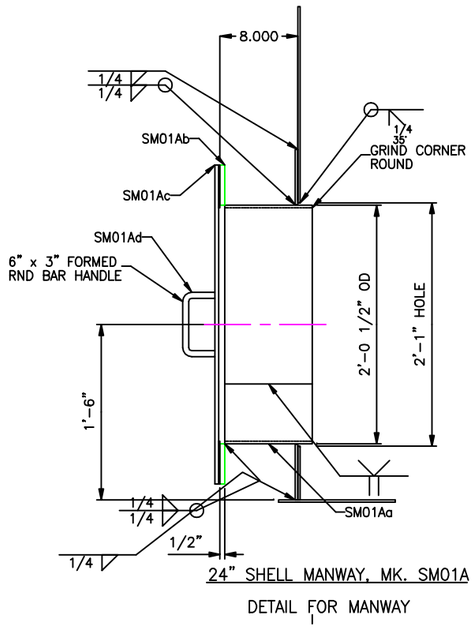

24" SHELL MANWAY, MK. SM01A

DETAIL FOR MANWAY

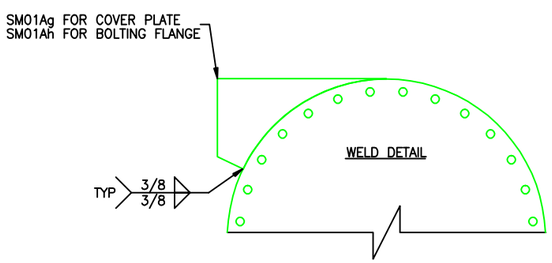

WORK INSTRUCTIONS

RECV	CUT ROLL	FIT	WELDED	READY TO COAT	SENT TO VENDOR	COATING COMPLETE	READY TO SHIP	SHIPPED

BILL OF MATERIALS

QTY	SHPG MARK	ASSY QTY	ASSY MARK	DESCRIPTION	LENGTH	SPEC MATL	REMARKS	LBS WEIGHT
1	SM01A			24" SHELL MANWAY				[315]
		1	SM01Aa	PL. 1/4" x 8.9927" x	6'–4 3/16"	A36	ROLL	46
		1	SM01Ab	FLANGE PL 1/2" x 24 1/2" ID x 32 3/4" OD		A36		51
		1	SM01Ac	COVER PL 3/8" x 32 3/4" OD		A36		88
		2	SM01Ad	RND BAR 5/8" DIA x	1'–0"	A36	BEND	12
		4	SM01Ae	MACHINE BOLT 3/4" DIA W/HN (SHIPPING) x	2"	A325	W/ H. NUTS	4
		2	SM01Af	HINGE H–05 STEEL W/STEEL PIN		CS	WELD ON	4
		2	SM01Ag	PL 3/8" x 9 1/4" x	1'–5 3/8"	A36		14
		2	SM01Ah	PL 1/2" x 9 1/4" x	1'–5 3/8"	A36		18
		28	SM01B	MACHINE BOLT 3/4" DIA W/HN (SERVICE) x	2"	A325	W/ H. NUTS	28
		1	SM01C	GASKET 1/8" THK x 24" ID x 32 3/4" OD		NEOPRENE		1
		1	SM01D	REPAD PL. 0.2500" x 36" x	3'–0"	A36	ROLL	49

BILL OF MATERIALS LISTED FOR (1) TANK – (2) TANKS REQUIRED.

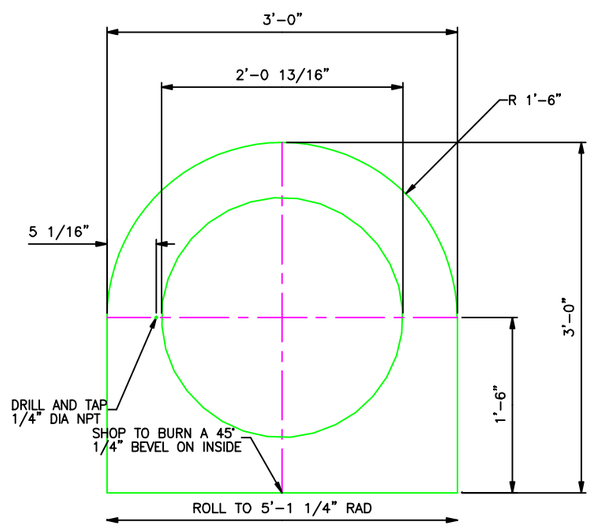

REV.	ISSUE	BY	DATE	DESCRIPTION
0	01	NP	JAN. 2016	SUBMITTAL FOR APPROVAL

DESIGNED BY: -
DRAWN BY: -
SHEET CHK'D BY: -
SHEET CHK'D BY: -
APPROVED BY: -
DATE: -

BROWN-MINNEAPOLIS TANK
C & E, INC.
8301 BROADWAY BLVD SE
ALBUQUERQUE - NM 87105
505-583-4800

6000 GALLON WATER STORAGE TANKS
T-210 & T-216
10'-2" ID x 11'-0" HEIGHT
TECHSAS, INC
4619 WEST BAYSHORE DRIVE
BACLIFF, TEXAS 77518

24" SHELL MANWAY w/ HINGE

TYPE: AWWA-D100-11 | SCALE: AS SHOWN | JOB: 20099

SHEET No. SM01

OF: 20 0F 34

WORK INSTRUCTIONS								
RECV	CUT ROLL	FIT	WELDED	READY TO COAT	SENT TO VENDOR	COATING COMPLETE	READY TO SHIP	SHIPPED

BILL OF MATERIALS								
QTY	SHPG MARK	ASSY QTY	ASSY MARK	DESCRIPTION	LENGTH	SPEC MATL	REMARKS	LBS WEIGHT
1	SN01A			6" SHELL NOZZLE				[31]
		1	SN01Aa	6" SCH 80 PIPE x	5 3/4"	A53-B		14
		1	SN01Ab	6" - 150# R.F. S.O. FLANGE		A105		17
1	SN01B			REPAD PL. 0.2500" x 6 3/4" ID x 15 3/4" OD		A36	ROLL	[12]

BILL OF MATERIALS LISTED FOR (1) TANK - (2) TANKS REQUIRED.

NOTES:
1.- AFTER INSTALLATION, AIR TEST REPAD WELDS TO 15 PSI PER API-650 PARA 7.3.4.
2.- AFTER THE REINFORCING PAD(S) HAVE BEEN TESTED, THE 0" DRILLED AND TAPPED HOLE(S) MUST REMAIN OPEN (NO PLUGS, GREASE, PAINT OR ANY OTHER FOREIGN MATERIAL PLUGGING THE 0" TEST HOLE).

6 5/8" NOZZLE OD
7 1/8" HOLE OPENING
DETAIL FOR NOZZLE E

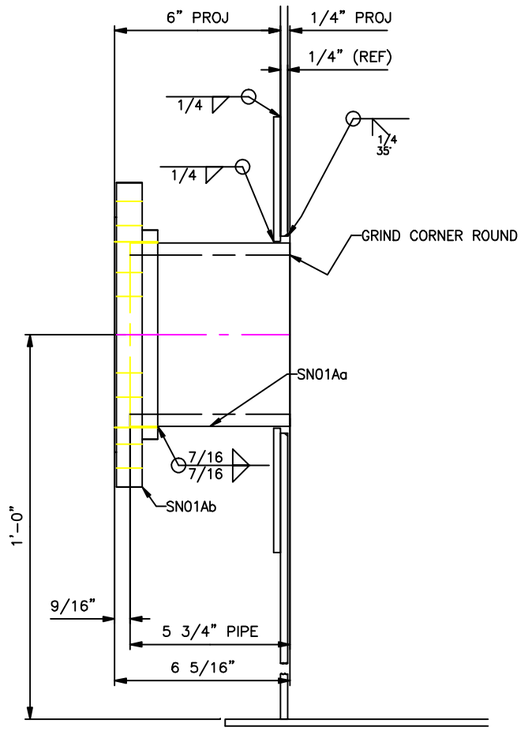

6" NOZZLE, MK. SN01A

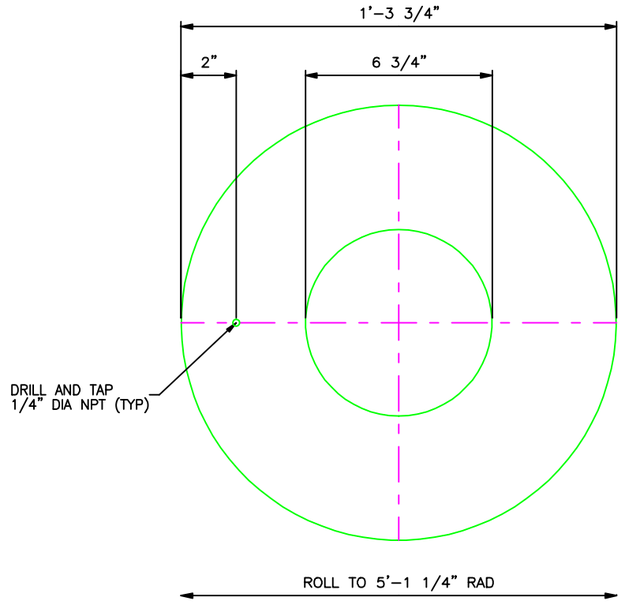

MK. SN01B

REV.	ISSUE	BY	DATE	DESCRIPTION
0	01	NP	JAN. 2016	SUBMITTAL FOR APPROVAL

DESIGNED BY: -
DRAWN BY: -
SHEET CHK'D BY: -
SHEET CHK'D BY: -
APPROVED BY: -
DATE: -

BMT

BROWN-MINNEAPOLIS TANK
C & E, INC.
8301 BROADWAY BLVD SE
ALBUQUERQUE - NM 87105
505-583-4800

6000 GALLON WATER STORAGE TANKS
T-210 & T-216
10'-2" ID x 11'-0" HEIGHT
TECHSAS, INC
4619 WEST BAYSHORE DRIVE
BACLIFF, TEXAS 77518

6" DISCHARGE NOZZLE

SHEET No. SN01

TYPE: AWWA-D100-11 | SCALE: AS SHOWN | JOB: 20099 | OF: 21 OF 34

WORK INSTRUCTIONS								
RECV	CUT ROLL	FIT	WELDED	READY TO COAT	SENT TO VENDOR	COATING COMPLETE	READY TO SHIP	SHIPPED

BILL OF MATERIALS								
QTY	SHPG MARK	ASSY QTY	ASSY MARK	DESCRIPTION	LENGTH	SPEC MATL	REMARKS	LBS WEIGHT
1	SN02A			4" SHELL NOZZLE				[20]
		1	SN02Aa	4" SCH 80 PIPE x	5 3/4"	A53-B		8
		1	SN02Ab	4" – 150# R.F. S.O. FLANGE		A105		12
1	SN02B			REPAD PL. 0.1875" x 4 5/8" ID x 8" OD		A36	ROLL	[2]

BILL OF MATERIALS LISTED FOR (1) TANK – (2) TANKS REQUIRED.

NOTES:
1.– AFTER INSTALLATION, AIR TEST REPAD WELDS TO 15 PSI PER API–650 PARA 7.3.4.
2.– AFTER THE REINFORCING PAD(S) HAVE BEEN TESTED, THE 0" DRILLED AND TAPPED HOLE(S) MUST REMAIN OPEN (NO PLUGS, GREASE, PAINT OR ANY OTHER FOREIGN MATERIAL PLUGGING THE 0" TEST HOLE).

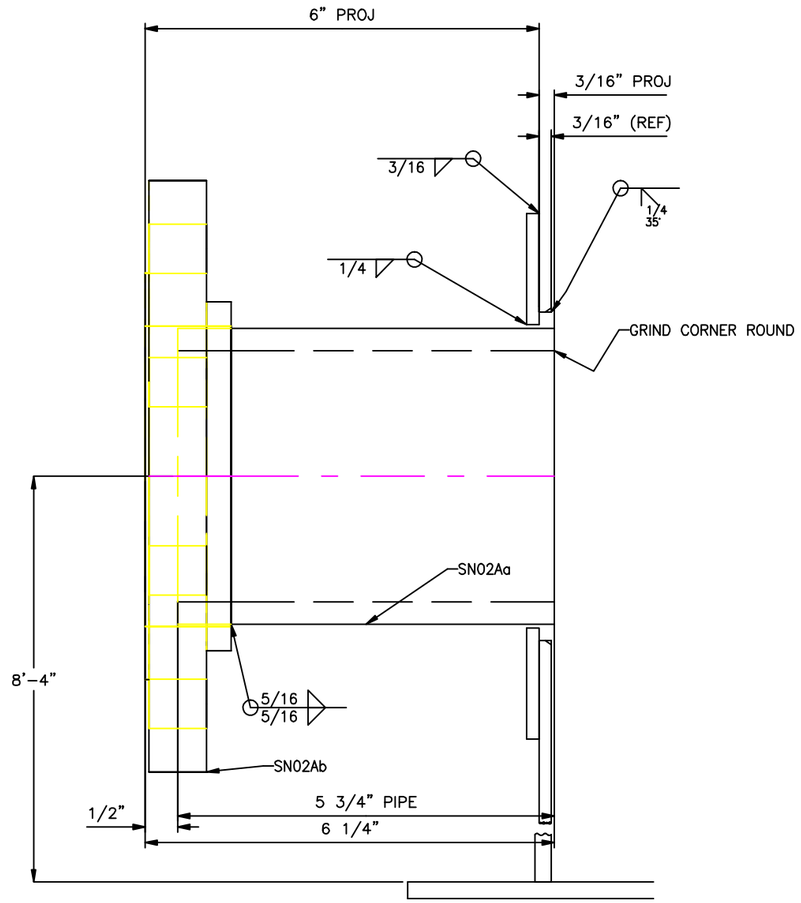

4 1/2" NOZZLE OD
5" HOLE OPENING

DETAIL FOR NOZZLE H

4" NOZZLE, MK. SN02A

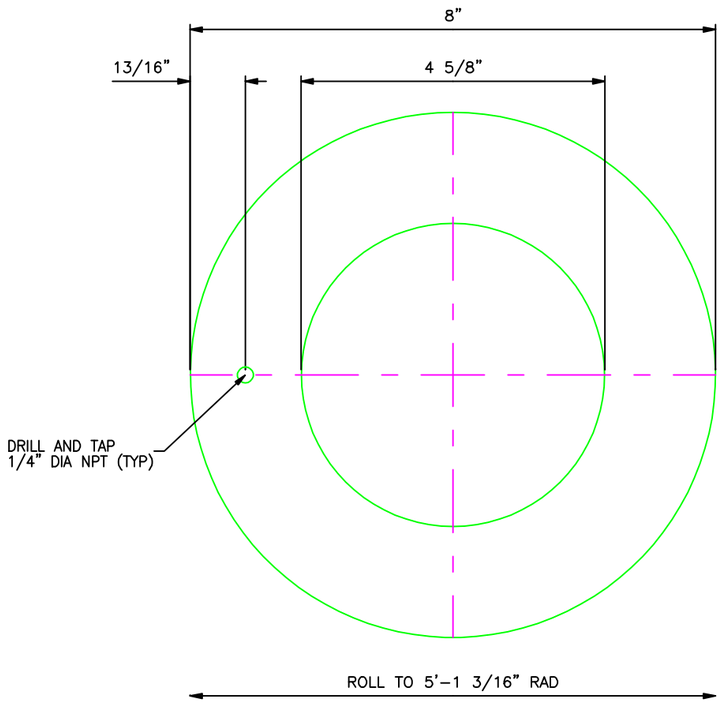

MK. SN02B

REV.	ISSUE	BY	DATE	DESCRIPTION
0	01	NP	JAN. 2016	SUBMITTAL FOR APPROVAL

DESIGNED BY: -
DRAWN BY: -
SHEET CHK'D BY: -
SHEET CHK'D BY: -
APPROVED BY: -
DATE: -

BMT

BROWN-MINNEAPOLIS TANK
C & E, INC.
8301 BROADWAY BLVD SE
ALBUQUERQUE - NM 87105
505-583-4800

6000 GALLON WATER STORAGE TANKS
T-210 & T-216
10'-2" ID x 11'-0" HEIGHT
TECHSAS, INC
4619 WEST BAYSHORE DRIVE
BACLIFF, TEXAS 77518

4" LEVEL NOZZLE

SHEET No. SN02

TYPE: AWWA-D100-11 | SCALE: AS SHOWN | JOB: 20099 | OF: 22 OF 34

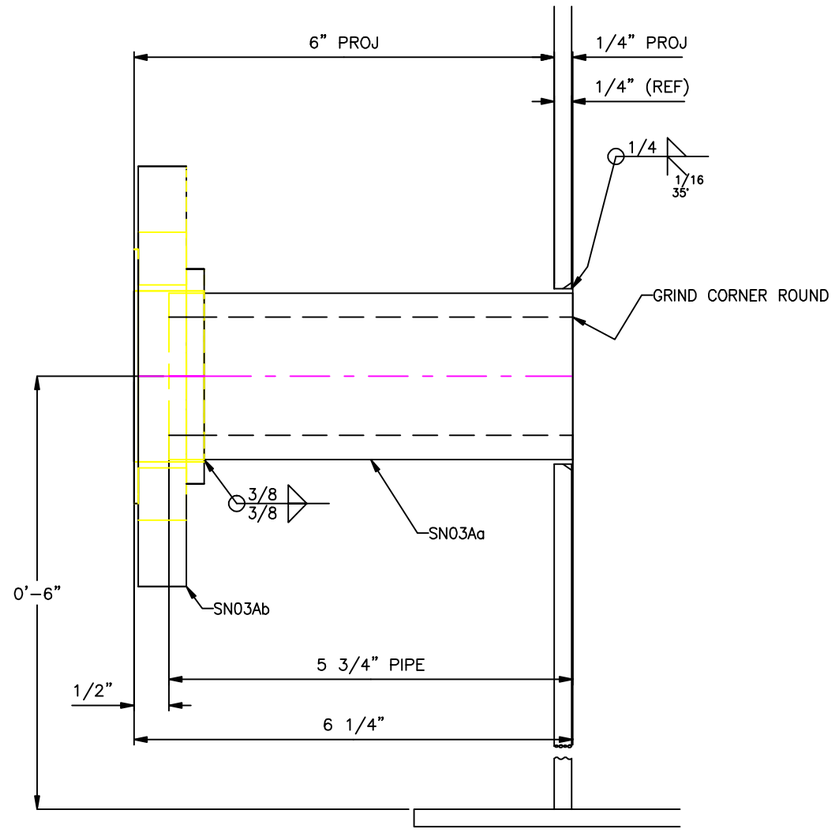

2" NOZZLE, MK. SN03A

2 3/8" NOZZLE OD
2 1/2" HOLE OPENING

DETAIL FOR NOZZLE
J

WORK INSTRUCTIONS								
RECV	CUT ROLL	FIT	WELDED	READY TO COAT	SENT TO VENDOR	COATING COMPLETE	READY TO SHIP	SHIPPED

BILL OF MATERIALS								
QTY	SHPG MARK	ASSY QTY	ASSY MARK	DESCRIPTION	LENGTH	SPEC MATL	REMARKS	LBS WEIGHT
1	SN03A			2" SHELL NOZZLE				[9]
		1	SN03Aa	2" SCH 160 PIPE x	5 3/4"	A53-B		4
		1	SN03Ab	2" – 150# R.F.S.O. FLANGE		A105		5

BILL OF MATERIALS LISTED FOR (1) TANK – (2) TANKS REQUIRED.

REV.	ISSUE	BY	DATE	DESCRIPTION
0	01	NP	JAN. 2016	SUBMITTAL FOR APPROVAL

DESIGNED BY: -
DRAWN BY: -
SHEET CHK'D BY: -
SHEET CHK'D BY: -
APPROVED BY: -
DATE: -

BMT

BROWN-MINNEAPOLIS TANK
C & E, INC.
8301 BROADWAY BLVD SE
ALBUQUERQUE - NM 87105
505-583-4800

6000 GALLON WATER STORAGE TANKS
T-210 & T-216
10'-2" ID x 11'-0" HEIGHT
TECHSAS, INC
4619 WEST BAYSHORE DRIVE
BACLIFF, TEXAS 77518

2" DRAIN NOZZLE

TYPE: AWWA-D100-11 | SCALE: AS SHOWN | JOB: 20099

SHEET No. SN03

OF: 23 OF 34

WORK INSTRUCTIONS								
RECV	CUT ROLL	FIT	WELDED	READY TO COAT	SENT TO VENDOR	COATING COMPLETE	READY TO SHIP	SHIPPED

BILL OF MATERIALS								
QTY	SHPG MARK	ASSY QTY	ASSY MARK	DESCRIPTION	LENGTH	SPEC MATL	REMARKS	LBS WEIGHT
1	SN04A			4" SHELL NOZZLE				[20]
		1	SN04Aa	4" SCH 80 PIPE x	5 3/4"	A53-B		8
		1	SN04Ab	4" – 150# R.F. S.O. FLANGE		A105		12
1	SN04B			REPAD PL. 0.1875" x 4 5/8" ID x 8" OD		A36	ROLL	[2]

BILL OF MATERIALS LISTED FOR (1) TANK – (2) TANKS REQUIRED.

NOTES:
1.– AFTER INSTALLATION, AIR TEST REPAD WELDS TO 15 PSI PER API–650 PARA 7.3.4.
2.– AFTER THE REINFORCING PAD(S) HAVE BEEN TESTED, THE 0" DRILLED AND TAPPED HOLE(S) MUST REMAIN OPEN (NO PLUGS, GREASE, PAINT OR ANY OTHER FOREIGN MATERIAL PLUGGING THE 0" TEST HOLE).

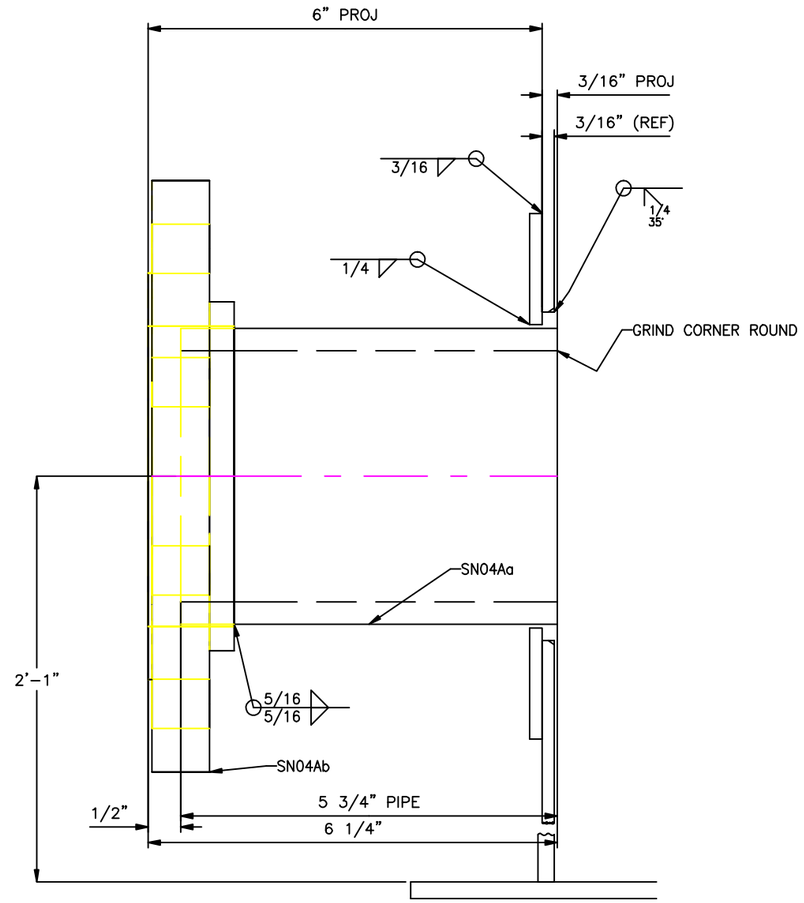

4 1/2" NOZZLE OD
5" HOLE OPENING

DETAIL FOR NOZZLE H

4" NOZZLE, MK. SN04A

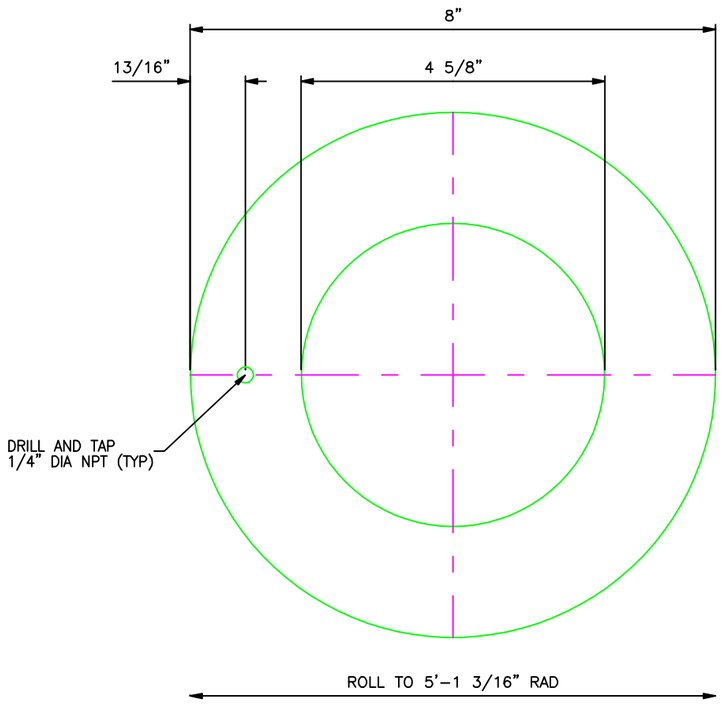

MK. SN04B

REV.	ISSUE	BY	DATE	DESCRIPTION
0	01	NP	JAN. 2016	SUBMITTAL FOR APPROVAL

DESIGNED BY: -
DRAWN BY: -
SHEET CHK'D BY: -
SHEET CHK'D BY: -
APPROVED BY: -
DATE: -

BROWN-MINNEAPOLIS TANK
C & E, INC.
8301 BROADWAY BLVD SE
ALBUQUERQUE - NM 87105
505-583-4800

6000 GALLON WATER STORAGE TANKS
T-210 & T-216
10'-2" ID x 11'-0" HEIGHT
TECHSAS, INC
4619 WEST BAYSHORE DRIVE
BACLIFF, TEXAS 77518

4" LEVEL NOZZLE

SHEET No. SN04

TYPE: AWWA-D100-11 | SCALE: AS SHOWN | JOB: 20099 | OF: 24 OF 34

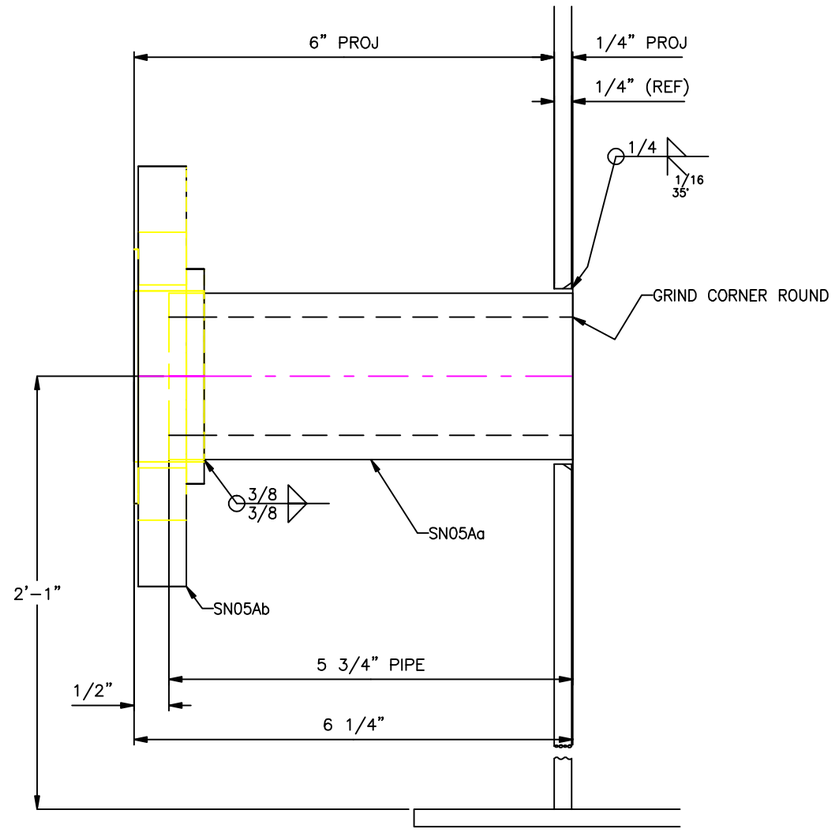

2" NOZZLE, MK. SN05A

2 3/8" NOZZLE OD
2 1/2" HOLE OPENING

DETAIL FOR NOZZLE
J

WORK INSTRUCTIONS								
RECV	CUT ROLL	FIT	WELDED	READY TO COAT	SENT TO VENDOR	COATING COMPLETE	READY TO SHIP	SHIPPED

BILL OF MATERIALS								
QTY	SHPG MARK	ASSY QTY	ASSY MARK	DESCRIPTION	LENGTH	SPEC MATL	REMARKS	LBS WEIGHT
1	SN05A			2" SHELL NOZZLE				[9]
		1	SN05Aa	2" SCH 160 PIPE x	5 3/4"	A53-B		4
		1	SN05Ab	2" – 150# R.F.S.O. FLANGE		A105		5

BILL OF MATERIALS LISTED FOR (1) TANK – (2) TANKS REQUIRED.

REV.	ISSUE	BY	DATE	DESCRIPTION
0	01	NP	JAN. 2016	SUBMITTAL FOR APPROVAL

DESIGNED BY: -
DRAWN BY: -
SHEET CHK'D BY: -
SHEET CHK'D BY: -
APPROVED BY: -
DATE: -

BMT

BROWN-MINNEAPOLIS TANK
C & E, INC.
8301 BROADWAY BLVD SE
ALBUQUERQUE - NM 87105
505-583-4800

6000 GALLON WATER STORAGE TANKS
T-210 & T-216
10'-2" ID x 11'-0" HEIGHT
TECHSAS, INC
4619 WEST BAYSHORE DRIVE
BACLIFF, TEXAS 77518

2" LEVEL NOZZLE

TYPE: AWWA-D100-11 | SCALE: AS SHOWN | JOB: 20099

SHEET No. SN05

OF: 25 0F 34

WORK INSTRUCTIONS								
RECV	CUT ROLL	FIT	WELDED	READY TO COAT	SENT TO VENDOR	COATING COMPLETE	READY TO SHIP	SHIPPED

BILL OF MATERIALS								
QTY	SHPG MARK	ASSY QTY	ASSY MARK	DESCRIPTION	LENGTH	SPEC MATL	REMARKS	LBS WEIGHT
1	SN06A			4" SHELL NOZZLE				[20]
		1	SN06Aa	4" SCH 80 PIPE x	5 3/4"	A53-B		8
		1	SN06Ab	4" – 150# R.F. S.O. FLANGE		A105		12
1	SN06B			REPAD PL. 0.1875" x 4 5/8" ID x 8" OD		A36	ROLL	[2]

BILL OF MATERIALS LISTED FOR (1) TANK – (2) TANKS REQUIRED.

NOTES:
1.– AFTER INSTALLATION, AIR TEST REPAD WELDS TO 15 PSI PER API–650 PARA 7.3.4.
2.– AFTER THE REINFORCING PAD(S) HAVE BEEN TESTED, THE 0" DRILLED AND TAPPED HOLE(S) MUST REMAIN OPEN (NO PLUGS, GREASE, PAINT OR ANY OTHER FOREIGN MATERIAL PLUGGING THE 0" TEST HOLE).

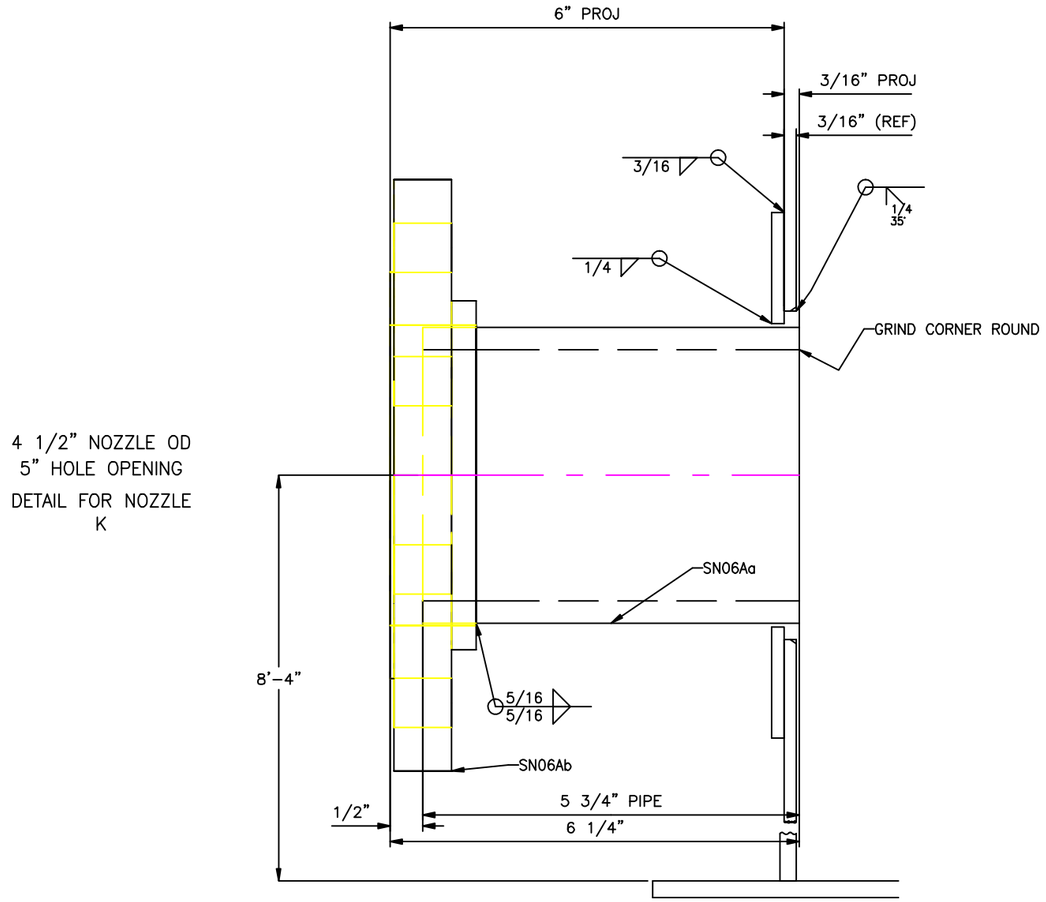

4 1/2" NOZZLE OD
5" HOLE OPENING

DETAIL FOR NOZZLE K

4" NOZZLE, MK. SN06A

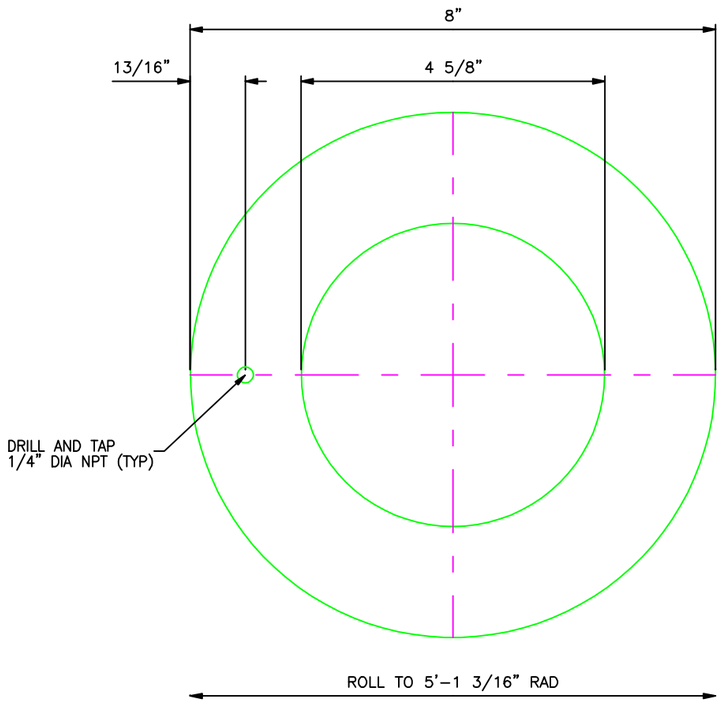

MK. SN06B

REV.	ISSUE	BY	DATE	DESCRIPTION
0	01	NP	JAN. 2016	SUBMITTAL FOR APPROVAL

DESIGNED BY: -
DRAWN BY: -
SHEET CHK'D BY: -
SHEET CHK'D BY: -
APPROVED BY: -
DATE: -

BMT

BROWN-MINNEAPOLIS TANK
C & E, INC.
8301 BROADWAY BLVD SE
ALBUQUERQUE - NM 87105
505-583-4800

6000 GALLON WATER STORAGE TANKS
T-210 & T-216
10'-2" ID x 11'-0" HEIGHT
TECHSAS, INC
4619 WEST BAYSHORE DRIVE
BACLIFF, TEXAS 77518

4" SPARE NOZZLE

SHEET No. SN06

TYPE: AWWA-D100-11 | SCALE: AS SHOWN | JOB: 20099 | OF: 26 OF 34

WORK INSTRUCTIONS								
RECV	CUT ROLL	FIT	WELDED	READY TO COAT	SENT TO VENDOR	COATING COMPLETE	READY TO SHIP	SHIPPED

BILL OF MATERIALS								
QTY	SHPG MARK	ASSY QTY	ASSY MARK	DESCRIPTION	LENGTH	SPEC MATL	REMARKS	LBS WEIGHT
1	SN07A			4" SHELL NOZZLE				[20]
		1	SN07Aa	4" SCH 80 PIPE x	5 3/4"	A53-B		8
		1	SN07Ab	4" – 150# R.F. S.O. FLANGE		A105		12
1	SN07B			REPAD PL. 0.1875" x 4 5/8" ID x 8" OD		A36	ROLL	[2]

BILL OF MATERIALS LISTED FOR (1) TANK – (2) TANKS REQUIRED.

NOTES:
1.– AFTER INSTALLATION, AIR TEST REPAD WELDS TO 15 PSI PER API–650 PARA 7.3.4.
2.– AFTER THE REINFORCING PAD(S) HAVE BEEN TESTED, THE 0" DRILLED AND TAPPED HOLE(S) MUST REMAIN OPEN (NO PLUGS, GREASE, PAINT OR ANY OTHER FOREIGN MATERIAL PLUGGING THE 0" TEST HOLE).

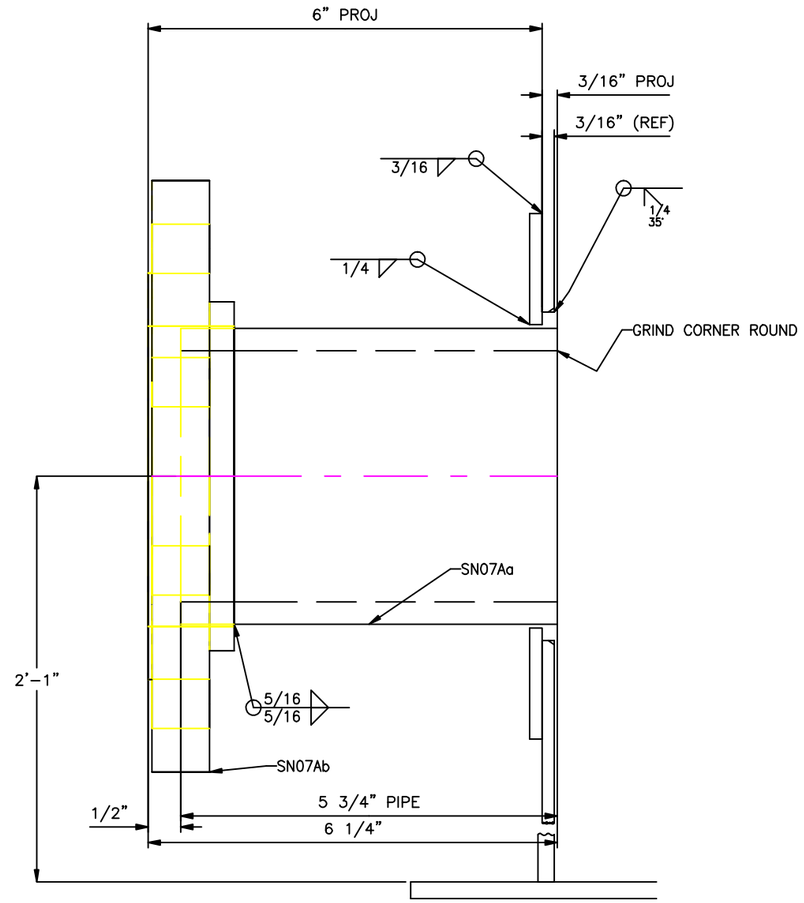

4 1/2" NOZZLE OD
5" HOLE OPENING

DETAIL FOR NOZZLE L

4" NOZZLE, MK. SN07A

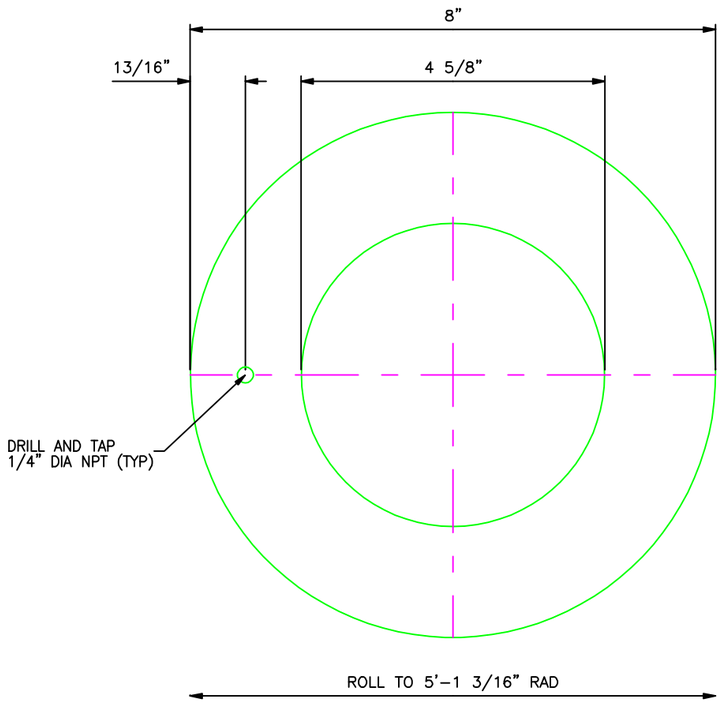

MK. SN07B

REV.	ISSUE	BY	DATE	DESCRIPTION
0	01	NP	JAN. 2016	SUBMITTAL FOR APPROVAL

DESIGNED BY: -
DRAWN BY: -
SHEET CHK'D BY: -
SHEET CHK'D BY: -
APPROVED BY: -
DATE: -

BMT

BROWN-MINNEAPOLIS TANK
C & E, INC.
8301 BROADWAY BLVD SE
ALBUQUERQUE - NM 87105
505-583-4800

6000 GALLON WATER STORAGE TANKS
T-210 & T-216
10'-2" ID x 11'-0" HEIGHT
TECHSAS, INC
4619 WEST BAYSHORE DRIVE
BACLIFF, TEXAS 77518

4" SPARE NOZZLE

SHEET No. SN07

TYPE: AWWA-D100-11 | SCALE: AS SHOWN | JOB: 20099 | OF: 27 OF 34

WORK INSTRUCTIONS								
RECV	CUT ROLL	FIT	WELDED	READY TO COAT	SENT TO VENDOR	COATING COMPLETE	READY TO SHIP	SHIPPED

BILL OF MATERIALS								
QTY	SHPG MARK	ASSY QTY	ASSY MARK	DESCRIPTION	LENGTH	SPEC MATL	REMARKS	LBS WEIGHT
1	SN08A			6" SHELL NOZZLE				[31]
		1	SN08Aa	6" SCH 80 PIPE x	5 3/4"	A53-B		14
		1	SN08Ab	6" - 150# R.F. S.O. FLANGE		A105		17
1	SN08B			REPAD PL. 0.2500" x 6 3/4" ID x 15 3/4" OD		A36	ROLL	[12]

BILL OF MATERIALS LISTED FOR (1) TANK - (2) TANKS REQUIRED.

NOTES:
1.- AFTER INSTALLATION, AIR TEST REPAD WELDS TO 15 PSI PER API-650 PARA 7.3.4.
2.- AFTER THE REINFORCING PAD(S) HAVE BEEN TESTED, THE 0" DRILLED AND TAPPED HOLE(S) MUST REMAIN OPEN (NO PLUGS, GREASE, PAINT OR ANY OTHER FOREIGN MATERIAL PLUGGING THE 0" TEST HOLE).

6 5/8" NOZZLE OD
7 1/8" HOLE OPENING
DETAIL FOR NOZZLE M

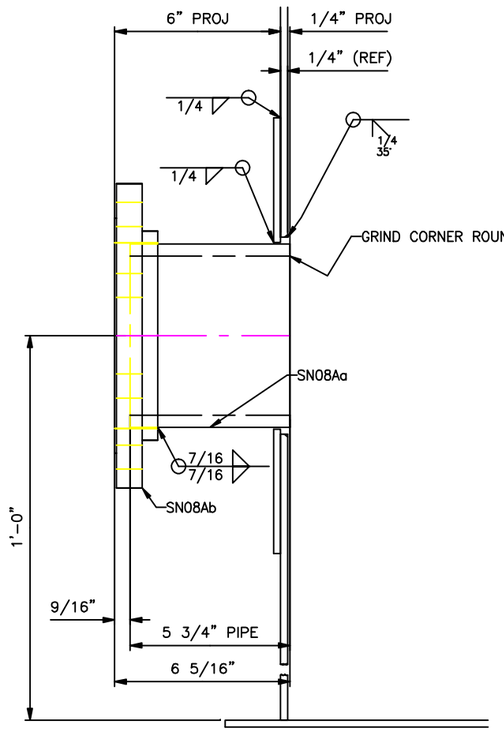

6" NOZZLE, MK. SN08A

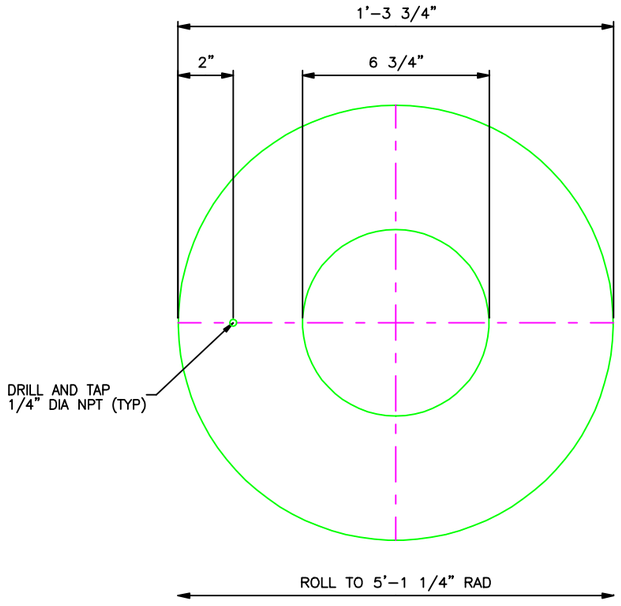

MK. SN08B

REV.	ISSUE	BY	DATE	DESCRIPTION
0	01	NP	JAN. 2016	SUBMITTAL FOR APPROVAL

DESIGNED BY: -
DRAWN BY: -
SHEET CHK'D BY: -
SHEET CHK'D BY: -
APPROVED BY: -
DATE: -

BMT

BROWN-MINNEAPOLIS TANK
C & E, INC.
8301 BROADWAY BLVD SE
ALBUQUERQUE - NM 87105
505-583-4800

6000 GALLON WATER STORAGE TANKS
T-210 & T-216
10'-2" ID x 11'-0" HEIGHT
TECHSAS, INC
4619 WEST BAYSHORE DRIVE
BACLIFF, TEXAS 77518

6" SPARE NOZZLE

SHEET No. SN08

TYPE: AWWA-D100-11 | SCALE: AS SHOWN | JOB: 20099 | OF: 28 OF 34

WORK INSTRUCTIONS								
RECV	CUT ROLL	FIT	WELDED	READY TO COAT	SENT TO VENDOR	COATING COMPLETE	READY TO SHIP	SHIPPED

BILL OF MATERIALS								
QTY	SHPG MARK	ASSY QTY	ASSY MARK	DESCRIPTION	LENGTH	SPEC MATL	REMARKS	LBS WEIGHT
1	RN01A			6" ROOF NOZZLE				[27]
		1	RN01Aa	6" SCH 40 PIPE x	6 5/16"	A53-B		10
		1	RN01Ab	6" – 150# R.F. S.O. FLANGE		A105		17

BILL OF MATERIALS LISTED FOR (1) TANK – (2) TANKS REQUIRED.

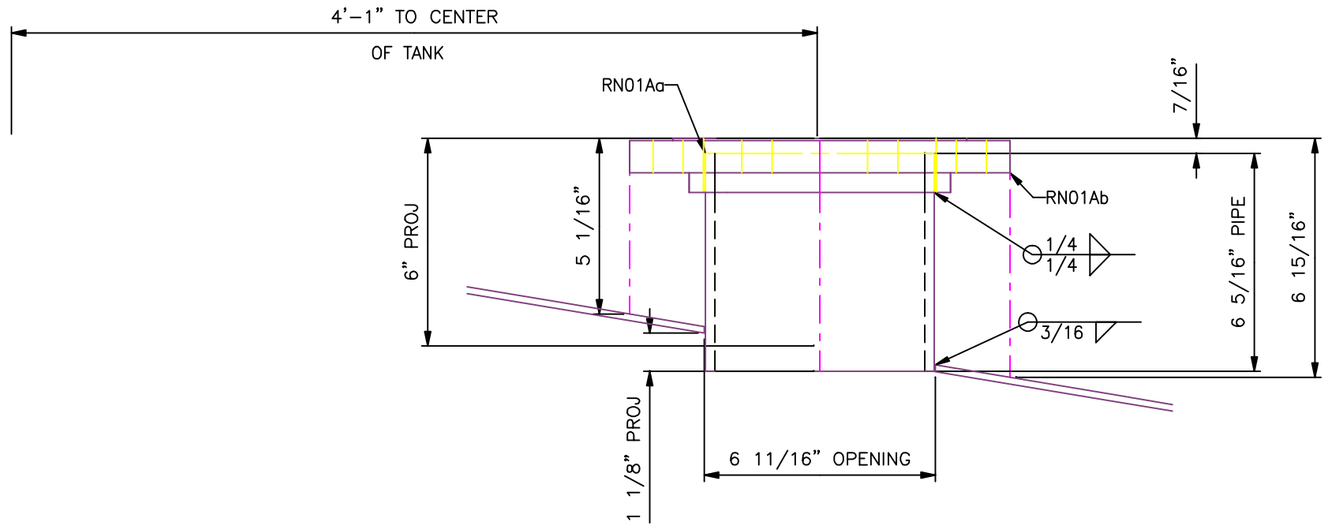

6" NOZZLE, MK. RN01A
DETAIL FOR NOZZLE
A

REV.	ISSUE	BY	DATE	DESCRIPTION
0	01	NP	JAN. 2016	SUBMITTAL FOR APPROVAL

DESIGNED BY: -
DRAWN BY: -
SHEET CHK'D BY: -
SHEET CHK'D BY: -
APPROVED BY: -
DATE: -

BROWN-MINNEAPOLIS TANK
C & E, INC.
8301 BROADWAY BLVD SE
ALBUQUERQUE - NM 87105
505-583-4800

6000 GALLON WATER STORAGE TANKS
T-210 & T-216
10'-2" ID x 11'-0" HEIGHT
TECHSAS, INC
4619 WEST BAYSHORE DRIVE
BACLIFF, TEXAS 77518

6" FILL NOZZLE

TYPE: AWWA-D100-11 | SCALE: AS SHOWN | JOB: 20099

SHEET No. RN01

OF: 29 0F 34

WORK INSTRUCTIONS								
RECV	CUT ROLL	FIT	WELDED	READY TO COAT	SENT TO VENDOR	COATING COMPLETE	READY TO SHIP	SHIPPED

BILL OF MATERIALS								
QTY	SHPG MARK	ASSY QTY	ASSY MARK	DESCRIPTION	LENGTH	SPEC MATL	REMARKS	LBS WEIGHT
1	RN02A			6" ROOF NOZZLE				[27]
		1	RN02Aa	6" SCH 40 PIPE x	6 5/16"	A53-B		10
		1	RN02Ab	6" – 150# R.F. S.O. FLANGE		A105		17

BILL OF MATERIALS LISTED FOR (1) TANK – (2) TANKS REQUIRED.

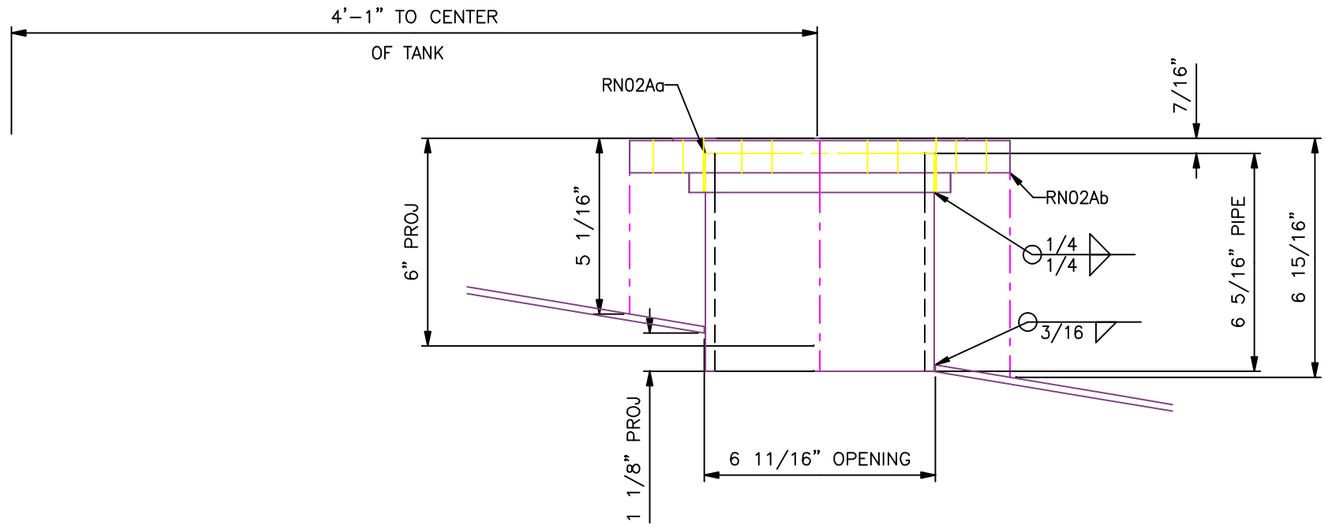

6" NOZZLE, MK. RN02A
DETAIL FOR NOZZLE
B

REV.	ISSUE	BY	DATE	DESCRIPTION
0	01	NP	JAN. 2016	SUBMITTAL FOR APPROVAL

DESIGNED BY: -
DRAWN BY: -
SHEET CHK'D BY: -
SHEET CHK'D BY: -
APPROVED BY: -
DATE: -

BROWN-MINNEAPOLIS TANK
C & E, INC.
8301 BROADWAY BLVD SE
ALBUQUERQUE - NM 87105
505-583-4800

6000 GALLON WATER STORAGE TANKS
T-210 & T-216
10'-2" ID x 11'-0" HEIGHT
TECHSAS, INC
4619 WEST BAYSHORE DRIVE
BACLIFF, TEXAS 77518

6" FILL NOZZLE

TYPE: AWWA-D100-11 | SCALE: AS SHOWN | JOB: 20099

SHEET No. RN02

OF: 30 0F 34

WORK INSTRUCTIONS								
RECV	CUT ROLL	FIT	WELDED	READY TO COAT	SENT TO VENDOR	COATING COMPLETE	READY TO SHIP	SHIPPED

BILL OF MATERIALS								
QTY	SHPG MARK	ASSY QTY	ASSY MARK	DESCRIPTION	LENGTH	SPEC MATL	REMARKS	LBS WEIGHT
1	RN03A			6" ROOF NOZZLE				[27]
		1	RN03Aa	6" SCH 40 PIPE x	6 5/16"	A53-B		10
		1	RN03Ab	6" - 150# R.F. S.O. FLANGE		A105		17

BILL OF MATERIALS LISTED FOR (1) TANK - (2) TANKS REQUIRED.

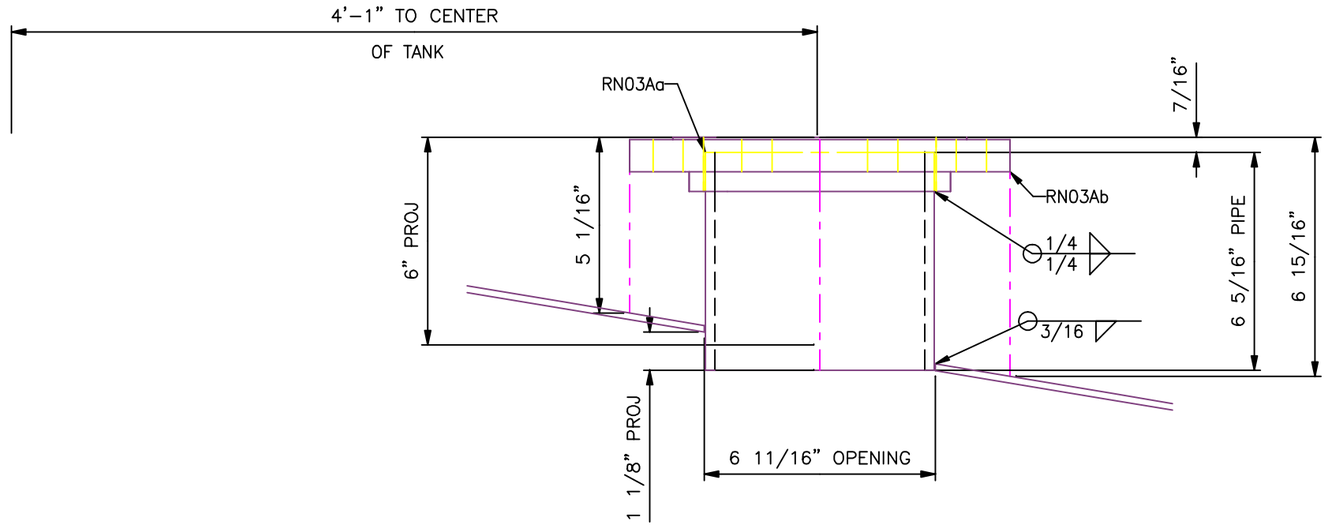

6" NOZZLE, MK. RN03A
DETAIL FOR NOZZLE
C

REV.	ISSUE	BY	DATE	DESCRIPTION
0	01	NP	JAN. 2016	SUBMITTAL FOR APPROVAL

DESIGNED BY: -
DRAWN BY: -
SHEET CHK'D BY: -
SHEET CHK'D BY: -
APPROVED BY: -
DATE: -

BMT

BROWN-MINNEAPOLIS TANK
C & E, INC.
8301 BROADWAY BLVD SE
ALBUQUERQUE - NM 87105
505-583-4800

6000 GALLON WATER STORAGE TANKS
T-210 & T-216
10'-2" ID x 11'-0" HEIGHT
TECHSAS, INC
4619 WEST BAYSHORE DRIVE
BACLIFF, TEXAS 77518

6" VENT NOZZLE

TYPE: AWWA-D100-11 | SCALE: AS SHOWN | JOB: 20099

SHEET No. RN03

OF: 31 0F 34

WORK INSTRUCTIONS								
RECV	CUT ROLL	FIT	WELDED	READY TO COAT	SENT TO VENDOR	COATING COMPLETE	READY TO SHIP	SHIPPED

BILL OF MATERIALS								
QTY	SHPG MARK	ASSY QTY	ASSY MARK	DESCRIPTION	LENGTH	SPEC MATL	REMARKS	LBS WEIGHT
1	RN04A			6" ROOF NOZZLE				[27]
		1	RN04Aa	6" SCH 40 PIPE x	6 5/16"	A53-B		10
		1	RN04Ab	6" – 150# R.F. S.O. FLANGE		A105		17

BILL OF MATERIALS LISTED FOR (1) TANK – (2) TANKS REQUIRED.

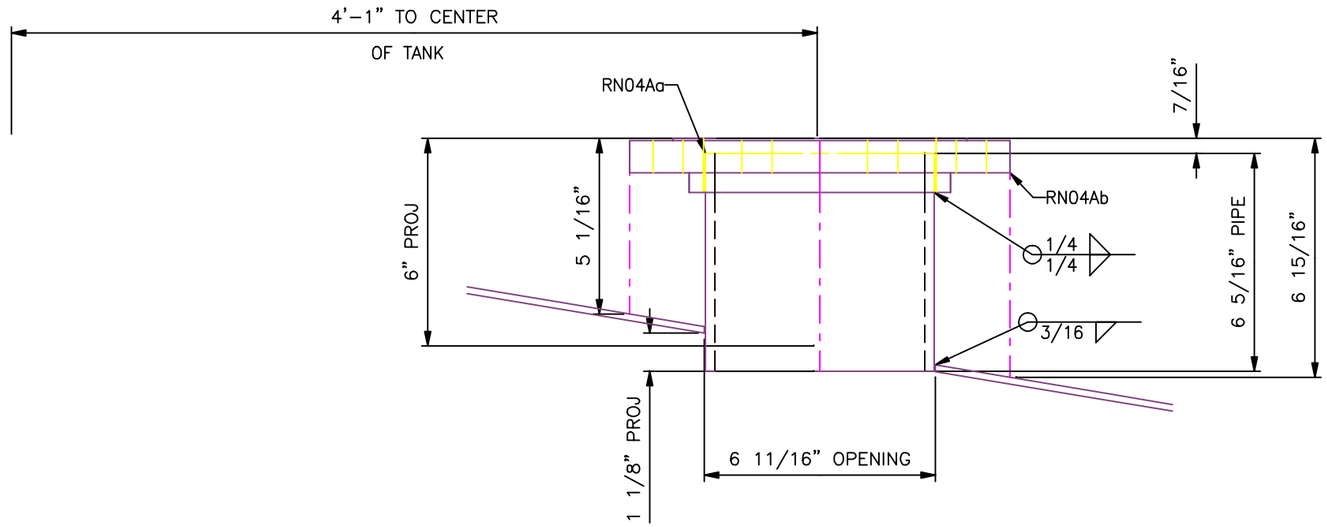

6" NOZZLE, MK. RN04A
DETAIL FOR NOZZLE
D

REV.	ISSUE	BY	DATE	DESCRIPTION
0	01	NP	JAN. 2016	SUBMITTAL FOR APPROVAL

DESIGNED BY: -
DRAWN BY: -
SHEET CHK'D BY: -
SHEET CHK'D BY: -
APPROVED BY: -
DATE: -

BMT
BROWN-MINNEAPOLIS TANK
C & E, INC.
8301 BROADWAY BLVD SE
ALBUQUERQUE - NM 87105
505-583-4800

6000 GALLON WATER STORAGE TANKS
T-210 & T-216
10'-2" ID x 11'-0" HEIGHT
TECHSAS, INC
4619 WEST BAYSHORE DRIVE
BACLIFF, TEXAS 77518

6" SPARE NOZZLE

TYPE: AWWA-D100-11 | SCALE: AS SHOWN | JOB: 20099

SHEET No. RN04

OF: 32 0F 34

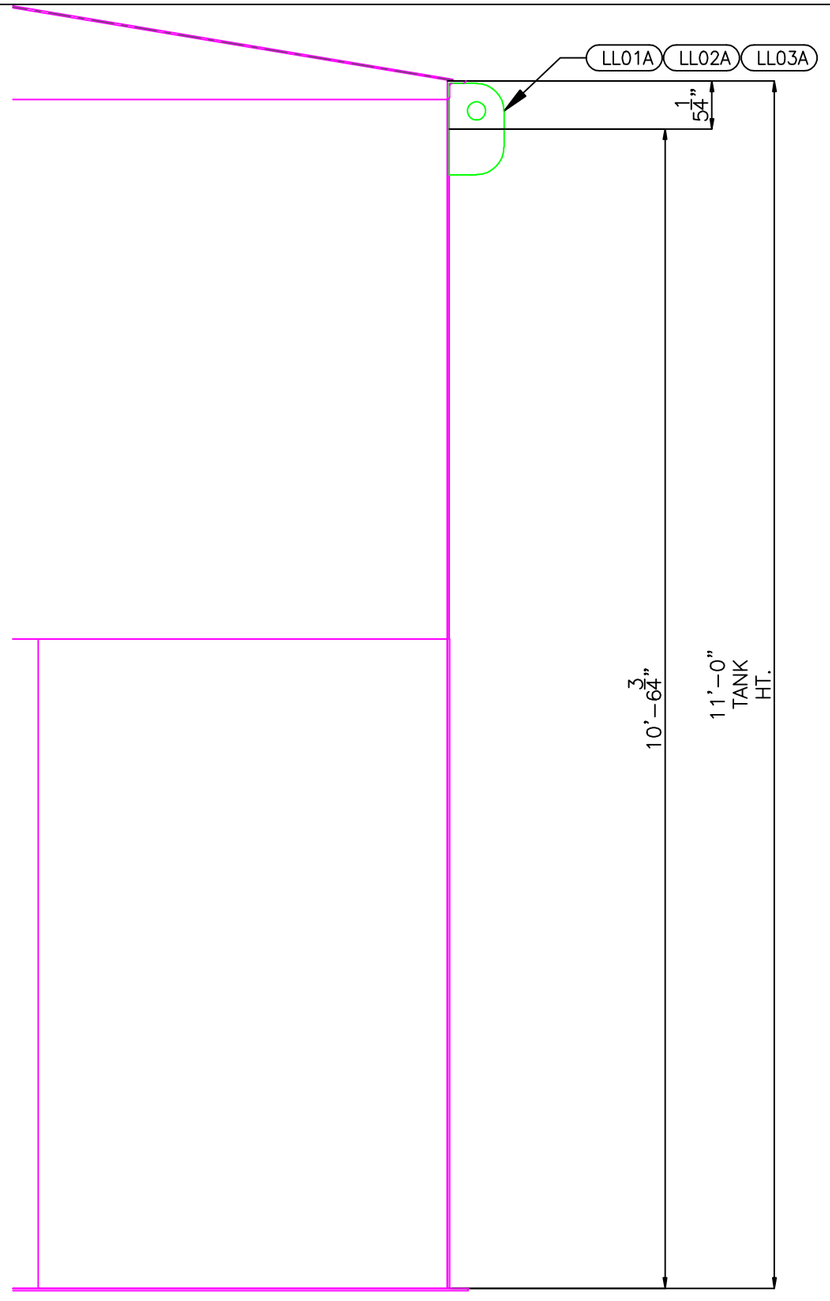

ELEVATION
TYP ELEV ALL SUPPORTS

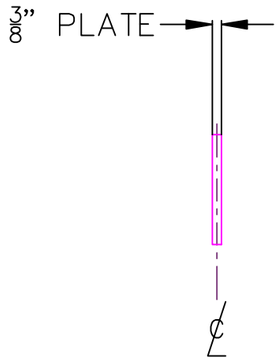

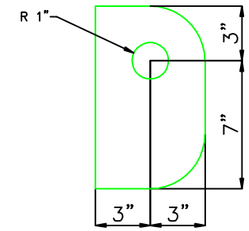

LL01A – LL02A – LL03A

WORK INSTRUCTIONS								
RECV	CUT ROLL	FIT	WELDED	READY TO COAT	SENT TO VENDOR	COATING COMPLETE	READY TO SHIP	SHIPPED

BILL OF MATERIALS								
QTY	SHPG MARK	ASSY QTY	ASSY MARK	DESCRIPTION	LENGTH	SPEC MATL	REMARKS	LBS WEIGHT
1	LL01A			PIPE SUPPORT CLIP				[6]
		1	LL01Aa	FB 1/2" x 6" x	10"	A36		6
1	LL02A			PIPE SUPPORT CLIP				[6]
		1	LL02Aa	FB 1/2" x 6" x	10"	A36		6
1	LL03A			PIPE SUPPORT CLIP				[6]
		1	LL03Aa	FB 1/2" x 6" x	10"	A36		6

BILL OF MATERIALS LISTED FOR (1) TANK – (2) TANKS REQUIRED.

REV.	ISSUE	BY	DATE	DESCRIPTION
0	01	NP	JAN. 2016	SUBMITTAL FOR APPROVAL

DESIGNED BY: -
DRAWN BY: -
SHEET CHK'D BY: -
SHEET CHK'D BY: -
APPROVED BY: -
DATE: -

BMT

BROWN-MINNEAPOLIS TANK
C & E, INC.
8301 BROADWAY BLVD SE
ALBUQUERQUE - NM 87105
505-583-4800

6000 GALLON WATER STORAGE TANKS
T-210 & T-216
10'-2" ID x 11'-0" HEIGHT
TECHSAS, INC
4619 WEST BAYSHORE DRIVE
BACLIFF, TEXAS 77518

LIFTING LUGS

TYPE: AWWA-D100-11 | SCALE: AS SHOWN | JOB: 20099

SHEET No.
LL01
OF: 33 0F 34

MARK	DESCRIPTION	QTY	SPEC	REMARKS	WT
NP01A	NAME PLATE & MOUNTING BRACKET	1			
a	BMT NAME PLATE	1	SS	DETAIL	
b	BACK PL-PL 3/16 x 6 1/4 x 0'-7 1/4	1	A36		
c	MOUNT TAB-PL 3/16 x 1 1/2 x 0'-5 1/4	2	A36		
d	1/8" BLIND RIVET	4	CS		
e	3/8 NC x 1" LG HH BOLT & NUT	2	A307		

MARK	DESCRIPTION	QTY	SPEC	REMARKS	WT
NP01B	GROUNDING LUG	2			4
NP01Ba	PL 3/8" x 4 x 0'-4	1	A36	DETAIL	

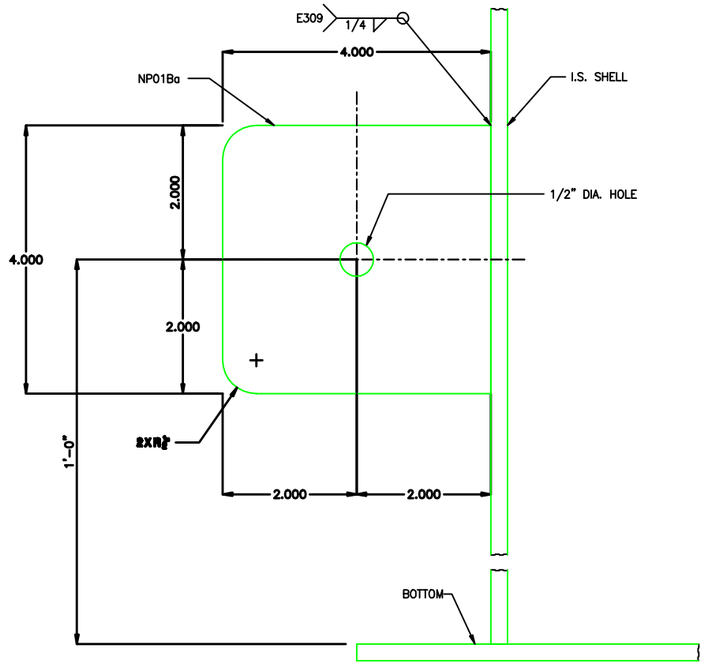

NP01B GROUNDING LUG - 2 REQ'D PER TANK

SCALE: .98X

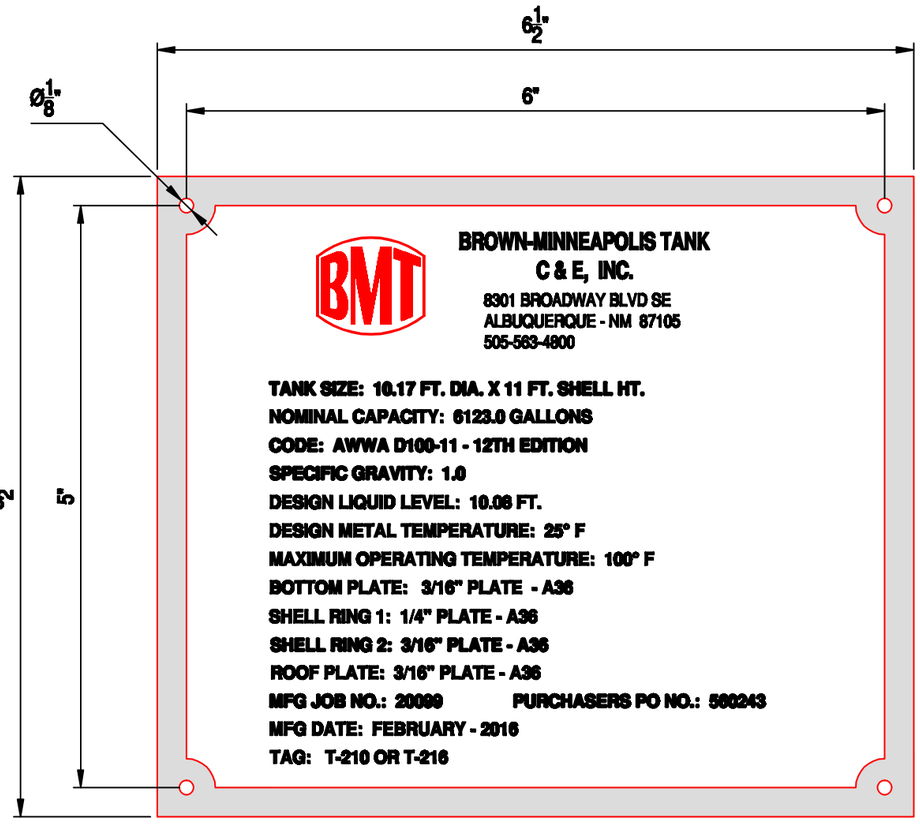

NAME PLATE

SCALE: .98X

NP01A NAME PLATE DETAIL - TANK NO. T-210 OR T-216

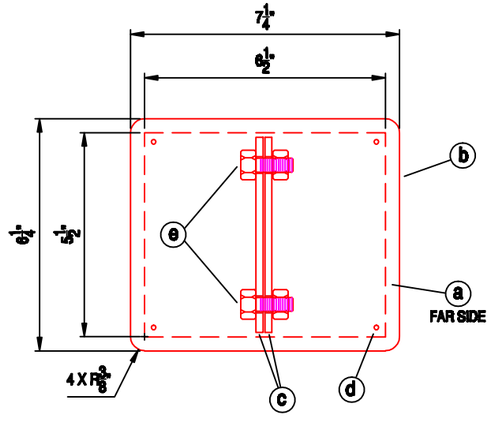

BACK

NAME PLATE MOUNTING BRACKET

SCALE: 4XP

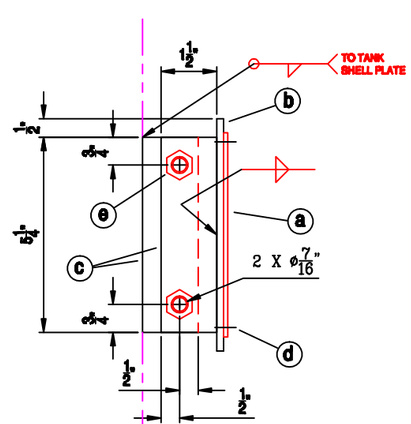

SIDE

ANY USE OF THIS DRAWING IS INTENDED SOLEY FOR BROWN-MINNEAPOLIS TANK EXCLUSIVELY. ANY OTHER USE IS PROHIBITED.

REV.	ISSUE	BY	DATE	DESCRIPTION
0	01	NP	01/2016	SUBMITTAL FOR APPROVAL

DESIGNED BY: -
DRAWN BY: -
SHEET CHK'D BY: -
SHEET CHK'D BY: -
APPROVED BY: -
DATE: -

BROWN-MINNEAPOLIS TANK
C & E, INC.
8301 BROADWAY BLVD SE
ALBUQUERQUE - NM 87105
505-563-4800

6000 GALLON WATER STORAGE TANKS
T-210 & T-216
10'-2" ID x 11'-0" HEIGHT
TECHSAS, INC
4919 WEST BAYSHORE DRIVE
BACLIFF, TEXAS 77518

NAME PLATE DETAIL
&
GROUND LUG DETAIL

SHEET No. NP01

TYPE: AWWA-D100-11 SCALE: AS SHOWN JOB: 20099 OF: 34 0F 34

BROWN-MINNEAPOLIS TANK

"A subsidiary of Associated Construction and Engineering, Inc."

BMT 20099

TANK PAINT SCHEDULE

FOR

6,000 Gal. Water Tanks
T-210 & T-216
For
EDB Interim Measure Project
Kirtland AFB
Albuquerque, New Mexico

8301 Broadway Blvd. SE, Albuquerque, NM 87105 • (505) 563-4800 • Fax (505) 563-4799

COATING SCHEDULE

EDB Interim Measure Project
6,000 Gal. Water Tanks T-210 and T-216
Kirtland AFB, Albuquerque, NM

INTERIOR TANK PAINT SYSTEM:

TYPE OF PAINT	NO. OF COATS	D.F.T.
1st Coat – Sherwin-Williams MACROPOXY 646 PW Fast Curing Epoxy (Mill White) (Shop Applied)	One	3 to 5 Mils
2nd Coat – Sherwin-Williams MACROPOXY 646 PW Fast Curing Epoxy (Light Blue) (Shop Applied)	One	3 to 5 Mils

TOTAL (Min) . . . . 6 to 10 MILS

METHOD OF APPLICATION: AIRLESS SPRAY, APPLICATION.
SURFACE PREPARATION: SSPC-SP10, "NEAR WHITE METAL BLAST CLEANING" (SEE DETAILS ON PAGE-2)

---------- * ----------

EXTERIOR TANK PAINT SYSTEM:

TYPE OF PAINT	NO. OF COATS	D.F.T.
1st Coat Sherwin-Williams Recoatable Epoxy Primer (Light Gray) (Shop Applied)	One	4 to 6 Mils
2nd Coat – Sherwin-Williams ACROLON 218 HS Acrylic Polyurethane (Color: SW7425 - White) (Shop Applied)	One	3 to 6 Mils

TOTAL (Min) . . . . .7 to12 MILS

METHOD OF APPLICATION: AIRLESS SPRAY, APPLICATION.
SURFACE PREPARATION: SSPC-SP6, "COMMERCIAL BLAST CLEANING" (SEE DETAILS ON PAGE-2)

Color Selection: SW7425 - White

Date of Approval:

SURFACE PREPARATION

INTERIOR:

The interior surfaces of the tank will be cleaned by sandblasting in the shop to remove mil scale in accordance with SSPC-SP10, Near White Blast Cleaning. Prepared surfaces will be coated with 3 to 5 mils of **Sherwin-Williams, MACROPOXY 646 PW Epoxy** (Mill White), followed by a finish coat of **Sherwin-Williams MACROPOXY 646 PW Epoxy** (Light Blue) of 3 to 5 mils for a total dry film thickness of 6 to 10 mils (DFT).

EXTERIOR:

The exterior surfaces of the tank will be cleaned by sandblasting to remove mil scale in accordance with SSPC-SP6, Commercial Blast Cleaning. Shop prepared surfaces will be coated with 4 to 6 mils of **Sherwin-Williams, Recoatable Epoxy Primer** (Light Gray), followed by a finish coat of **Sherwin-Williams, ACROLON 218 HS Acrylic Polyurethane** of 3 to 6 mils (color to be selected by the owner per Sherwin-Williams color chart) for a total dry film thickness of 7 to 12 mils (DFT).

NOTES:

- Application of two (2) or three (3) coat build-up system for tank structure surfaces will follow coat manufacturer's recommendation for drying time between coats of paint.

- Measurement of dry film thickness to be in accordance with SSPC-PA_2, excluding Section 5.2.2, Maximum Thickness.

Protective & Marine Coatings

Classified Drinking Water System Component ANSI/NSF 61 3JGH Water Quality

MACROPOXY® 646 PW
POTABLE WATER EPOXY

PART A	B58WX610	MILL WHITE
PART A	B58LX600	LIGHT BLUE
PART B	B58VX600	HARDENER
PART B	B58VX605	OAP HARDENER

Revised 5/11

PRODUCT INFORMATION

4.56

PRODUCT DESCRIPTION

MACROPOXY 646 PW EPOXY is a high solids, high build, fast drying, polyamide epoxy classified by UL to ANSI/NSF 61 as a tank lining for potable water storage tanks. The high solids content ensures adequate protection of sharp edges, corners, and welds. B58VX605 Hardener contains Opti-Check OAP pigment technology for rapid holiday detection with safe blue light inspection lamps.

- Low VOC
- Low odor
- Outstanding application properties

PRODUCT CHARACTERISTICS

Finish:	Semi-Gloss
Color:	Mill White and Light Blue
Volume Solids:	72% ± 2%, mixed
Weight Solids:	85% ± 2%, mixed
VOC (EPA Method 24): mixed	Unreduced: <250 g/L; 2.08 lb/gal Reduced 10%: <300 g/L; 2.50 lb/gal
Mix Ratio:	1:1 by volume

Recommended Spreading Rate per coat:

	Standard Min.	Standard Max.	AWWA Min.	AWWA Max.
Wet mils (microns)	**7.0** 175	**13.5** 340	**4.2** 105	**8.3** 208
Dry mils (microns)	**5.0** 125	**10*** 250*	**3.0** 75	**6.0*** 150*
~Coverage sq ft/gal (m^2/L)	**116** 2.8	**232** 5.6	**192** 4.7	**384** 9.4
Theoretical coverage **sq ft/gal** (m^2/L) @ 1 mil/25 micron dft	**1152** (28.2)			

NOTE: Brush or roll application may require multiple coats to achieve maximum film thickness and uniformity of appearance.

* See Recommended Systems on reverse side

Drying Schedule @ 7.0 mils wet (175 microns):

	@ 40°F/4.5°C	@ 77°F/25°C *50% RH*	@ 100°F/38°C
To touch:	4-5 hours	2 hours	1.5 hours
To handle:	48 hours	8 hours	4.5 hours
To recoat:			
minimum:	48 hours	8 hours	4.5 hours
maximum:	1 year	1 year	1 year
Cure for immersion:	14 days	7 days	4 days
Pot Life:	10 hours	4 hours	2 hours
Sweat-in-Time:	30 minutes	30 minutes	15 minutes

If maximum recoat time is exceeded, abrade surface before recoating.

Drying time is temperature, humidity, and film thickness dependent.

For **Potable Water Service**, allow a minimum cure time of 7 days at 77°F (25°C) prior to placing in service. Sterilize and rinse per AWWA C652.

Shelf Life:	36 months, unopened Store indoors at 40°F (4.5°C) to 100°F (38°C).
Flash Point:	91°F (33°C), TCC, mixed
Reducer/Clean Up:	Reducer R7K15

RECOMMENDED USES

Potable Water Tank Restrictions
Water Contact Temp: 23°C
Standard Cure; Tanks >= 1,500 gal: 2 cts
Standard Cure; Pipe >= 49.2"
Forced Cure; Tanks >= 100 gal: 2 cts
Forced Cure, Pipe >= 15"; 2 cts
Forced Cure; Maximum DFT: 6 mils/ct, 2 cts

- Conforms to AWWA D102 ICS #1, #2, and #5, and OCS #5***
- Meets or exceeds the performance requirements of SSPC Paint Spec 22

***Refer to respective systems

PERFORMANCE CHARACTERISTICS

Substrate*: Steel

Surface Preparation*: SSPC-SP10/NACE 2

System Tested*:

1 ct. Macropoxy 646 PW Fast Cure @ 6.0 mils (150 microns) dft

*unless otherwise noted below

Test Name	Test Method	Results
Abrasion Resistance	ASTM D4060, CS17 wheel, 1000 cycles, 1 kg load	84 mg loss
Adhesion	ASTM D4541	1,037 psi
Corrosion Weathering[1]	ASTM D5894, 36 cycles, 12,000 hours	Rating 10 per ASTM D714 for blistering; Rating 9 per ASTM D610 per rusting
Direct Impact Resistance	ASTM D2794	30 in. lb.
Dry Heat Resistance	ASTM D2485	250°F (121°C)
Flexibility	ASTM D522, 180° bend, 3/4" mandrel	Passes
Humidity Resistance	ASTM D4585, 6000 hours	No blistering, cracking, or rusting
Immersion[2]	5 year potable water	Rating 10 per ASTM D610 for Rusting; Rating 10 per ASTM D714 for Blistering
Immersion	18 months fresh and salt water	Passes, no rusting, blistering, or loss of adhesion
Pencil Hardness	ASTM D3363	3H
Water Vapor Permeance	ASTM D1653, Method B	1.16 grains/day

Epoxy coatings may darken or discolor following application and curing.

Footnotes:

[1] Zinc Clad II Plus Primer

[2] Galvapac/2 cts Macropoxy 646 PW

continued on back

Protective & Marine Coatings

Classified Drinking Water System Component ANSI/NSF 61 3JGH Water Quality

MACROPOXY® 646 PW
POTABLE WATER EPOXY

PART A	B58WX610	MILL WHITE
PART A	B58LX600	LIGHT BLUE
PART B	B58VX600	HARDENER
PART B	B58VX605	OAP HARDENER

PRODUCT INFORMATION

4.56

RECOMMENDED SYSTEMS

	Dry Film Thickness / ct. Mils	(Microns)
Immersion, Steel:		
***AWWA D102: Inside Coating System No. 1**		
minimum AWWA	8.0	(200)
1 ct. Macropoxy 646 PW	3.0	(75)
1 ct. Macropoxy 646 PW	5.0	(125)
***AWWA D102: Inside Coating System No. 2**		
minimum AWWA	12.0	(300)
1 ct. Macropoxy 646 PW	3.0	(75)
1 ct. Macropoxy 646 PW	4.0	(100)
1 ct. Macropoxy 646 PW	5.0	(125)
***AWWA D102: Inside Coating System No. 3**		
minimum AWWA	10.0	(250)
1 ct. Zinc Clad II LV or Plus	2.0	(50)
1 ct. Macropoxy 646 PW	3.0	(75)
1 ct. Macropoxy 646 PW	5.0	(125)
***AWWA D102: Inside Coating System No. 5**		
minimum AWWA	10.0	(250)
1 ct. Corothane I Galvapac	2.0	(50)
2 cts. Macropoxy 646 PW	4.0	(100)
Steel, forced cure (100 gallon minimum tank size or 15" or greater pipe diameter):		
2 cts. Macropoxy 646 PW	5.0-6.0	(125-150)
•12 mils maximum film thickness •Curing requirements		
•Flash 2 hours @ 75°F (24°C)		
•24 hours @ 150°F (66°C)		
•24 hours @ 75°F (24°C)		
Atmospheric, Steel:		
***AWWA D102: Outside Coating System No. 5**		
minimum	6.0	(150)
1 ct. Macropoxy 646 PW	2.0	(50)
1 ct. Macropoxy 646 PW	2.0	(50)
1 ct. Acrolon 218HS	2.0	(50)
***AWWA D102: Outside Coating System No. 6**		
minimum	6.0	(150)
1 ct. Corothane I GalvaPac PW	2.0	(50)
1 ct. Macropoxy 646 PW	2.0	(50)
1 ct. Acrolon 218HS	2.0	(50)
Concrete/Masonry, smooth:		
2 cts.Macropoxy 646 PW	3.0-6.0	(75-150)

Refer to UL.com for maximum dft restrictions

The systems listed above are representative of the product's use, other systems may be appropriate.

DISCLAIMER

The information and recommendations set forth in this Product Data Sheet are based upon tests conducted by or on behalf of The Sherwin-Williams Company. Such information and recommendations set forth herein are subject to change and pertain to the product offered at the time of publication. Consult your Sherwin-Williams representative to obtain the most recent Product Data Information and Application Bulletin.

SURFACE PREPARATION

Surface must be clean, dry, and in sound condition. Remove all oil, dust, grease, dirt, loose rust, and other foreign material to ensure adequate adhesion.

Refer to product Application Bulletin for detailed surface preparation information.

Minimum recommended surface preparation:

Iron & Steel
- Atmospheric: SSPC-SP2/3
- Immersion: SSPC-SP10/NACE 2, 2-3 mil (50-75 micron) profile

Concrete & Masonry
- Immersion: SSPC-SP13/NACE 6-4.3.1 or 4.3.2, or ICRI No. 310.2, CSP 1-3

Surface Preparation Standards

	Condition of Surface	ISO 8501-1 BS7079:A1	Swedish Std. SIS055900	SSPC	NACE
White Metal		Sa 3	Sa 3	SP 5	1
Near White Metal		Sa 2.5	Sa 2.5	SP 10	2
Commercial Blast		Sa 2	Sa 2	SP 6	3
Brush-Off Blast		Sa 1	Sa 1	SP 7	4
Hand Tool Cleaning	Rusted	C St 2	C St 2	SP 2	-
	Pitted & Rusted	D St 2	D St 2	SP 2	-
Power Tool Cleaning	Rusted	C St 3	C St 3	SP 3	-
	Pitted & Rusted	D St 3	D St 3	SP 3	-

TINTING

Do not Tint.

APPLICATION CONDITIONS

Temperature:	40°F (4.5°C) minimum, 110°F (43°C) maximum (air, surface, and material) At least 5°F (2.8°C) above dew point
Relative humidity:	85% maximum

Refer to product Application Bulletin for detailed application information.

ORDERING INFORMATION

Packaging:
- Part A: 1 gallon (3.78L) and 5 gallon (18.9L) containers
- Part B: 1 gallon (3.78L) and 5 gallon (18.9L) containers

Weight: 12.7 ± 0.2 lb/gal ; 1.5 Kg/L mixed, may vary by color

SAFETY PRECAUTIONS

Refer to the MSDS sheet before use.

Published technical data and instructions are subject to change without notice. Contact your Sherwin-Williams representative for additional technical data and instructions.

WARRANTY

The Sherwin-Williams Company warrants our products to be free of manufacturing defects in accord with applicable Sherwin-Williams quality control procedures. Liability for products proven defective, if any, is limited to replacement of the defective product or the refund of the purchase price paid for the defective product as determined by Sherwin-Williams. NO OTHER WARRANTY OR GUARANTEE OF ANY KIND IS MADE BY SHERWIN-WILLIAMS, EXPRESSED OR IMPLIED, STATUTORY, BY OPERATION OF LAW OR OTHERWISE, INCLUDING MERCHANTABILITY AND FITNESS FOR A PARTICULAR PURPOSE.

Protective & Marine Coatings

Classified
Drinking Water System Component
ANSI/NSF 61
3JGH
Water Quality

MACROPOXY® 646 PW
POTABLE WATER EPOXY

PART A	B58WX610	MILL WHITE
PART A	B58LX600	LIGHT BLUE
PART B	B58VX600	HARDENER
PART B	B58VX605	OAP HARDENER

Revised 5/11

APPLICATION BULLETIN

4.56

SURFACE PREPARATIONS

Surface must be clean, dry, and in sound condition. Remove all oil, dust, grease, dirt, loose rust, and other foreign material to ensure adequate adhesion.

Carbon Steel, Immersion Service:
Clean and degrease the surface prior to abrasive blasting per SSPC-SP 1 Solvent Cleaning. Methods described in SSPC-SP 1 include solvents, alkali, detergent/water, emulsions, and steam. The surface shall be abrasive blasted to SSPC-SP10/NACE No. 2 Near-White Blast Cleaning with a 2-3 mil (50-75 micron) profile. The anchor pattern shall be sharp with no evidence of a polished surface. The finished surface shall be free of all visible oil, grease, dust, dirt, mill scale, rust, coating, oxides, corrosion products, and other foreign matter with no more than 5% staining. After blasting, all dust and loose residue should be removed from the surface by acceptable means. Coat steel the same day as it is prepared and prior to the formation of rust.

Iron & Steel, Atmospheric Service:
Minimum surface preparation is Hand Tool Clean per SSPC-SP2. Remove all oil and grease from surface by Solvent Cleaning per SSPC-SP1. For better performance, use Commercial Blast Cleaning per SSPC-SP6/NACE 3, blast clean all surfaces using a sharp, angular abrasive for optimum surface profile (2 mils / 50 microns). Prime any bare steel within 8 hours or before flash rusting occurs.

Ductile Iron, Immersion Service:
Refer to National Association of Pipe Fabricators Surface Preparations Standard NAPF 500-03 as follows:

a. NAPF 500-03-01 "Solvent Cleaning"
b. NAPF 500-03-02 "Hand Tool Cleaning"
c. NAPF 500-03-03 "Power Tool Cleaning"
d. NAPF 500-03-04 "Abrasive Blast Cleaning of Ductile Iron Pipe".

Concrete and Masonry
For surface preparation, refer to SSPC-SP13/NACE 6, or ICRI No. 310.2, CSP 1-3. Surfaces should be thoroughly clean and dry. Concrete and mortar must be cured at least 28 days @ 75°F (24°C). Remove all loose mortar and foreign material. Surface must be free of laitance, concrete dust, dirt, form release agents, moisture curing membranes, loose cement and hardeners. Fill bug holes, air pockets and other voids with Steel-Seam FT910.

Follow the standard methods listed below when applicable:
ASTM D4258 Standard Practice for Cleaning Concrete.
ASTM D4259 Standard Practice for Abrading Concrete.
ASTM D4260 Standard Practice for Etching Concrete.
ASTM F1869 Standard Test Method for Measuring Moisture Vapor Emission Rate of Concrete.
SSPC-SP 13/Nace 6 Surface Preparation of Concrete.
ICRI No. 310.2 Concrete Surface Preparation.

Concrete, Immersion Service:
For surface preparation, refer to SSPC-SP13/NACE 6, Section 4.3.1 or 1.3.2 or ICRI No. 310.2, CSP 1-3.

Previously Painted Surfaces:
If in sound condition, clean the surface of all foreign material. Scarify the surface to create the desired surface profile. Apply coatings on a test area, allowing paint to dry one week before testing adhesion. If adhesion is poor, or if this product attacks the previous finish, removal of the previous coating may be necessary.

Surface Preparation Standards

	Condition of Surface	ISO 8501-1 BS7079:A1	Swedish Std. SIS055900	SSPC	NACE
White Metal		Sa 3	Sa 3	SP 5	1
Near White Metal		Sa 2.5	Sa 2.5	SP 10	2
Commercial Blast		Sa 2	Sa 2	SP 6	3
Brush-Off Blast		Sa 1	Sa 1	SP 7	4
Hand Tool Cleaning	Rusted	C St 2	C St 2	SP 2	-
	Pitted & Rusted	D St 2	D St 2	SP 2	-
Power Tool Cleaning	Rusted	C St 3	C St 3	SP 3	-
	Pitted & Rusted	D St 3	D St 3	SP 3	-

APPLICATION CONDITIONS

Temperature:	40°F (4.5°C) minimum, 110°F (43°C) maximum (air, surface, and material) At least 5°F (2.8°C) above dew point
Relative humidity:	85% maximum

APPLICATION EQUIPMENT

The following is a guide. Changes in pressures and tip sizes may be needed for proper spray characteristics. Always purge spray equipment before use with listed reducer. Any reduction must be compliant with existing VOC regulations and compatible with the existing environmental and application conditions.

Reducer/Clean Up ..... Reducer R7K15

Airless Spray
Pump.....30:1
Pressure.....2800 - 3000 psi
Hose.....1/4" ID
Tip .....017" - .023"
Filter .....60 mesh
Reduction.....As needed up to 10% by volume

Brush
Brush.....Nylon/Polyester or Natural Bristle
Reduction.....As needed up to 10% by volume

Roller
Cover .....3/8" woven with solvent resistant core
Reduction.....As needed up to 10% by volume

Recommended Spreading Rate per coat:

	Standard	AWWA
Wet mils (microns):	7.0 (175) - 13.5 (340)	4.2 (105) - 8.3 (208)
Dry mils (microns):	5.0 (125) - 10.0* (250)	3.0 (75) - 6.0* (150)
Coverage:	116 (2.8) - 232 (5.6) sq ft/gal (m^2/L)	192 (4.7) - 384 (9.4)

*See recommended systems on Product Information page

If specific application equipment is not listed above, equivalent equipment may be substituted.

continued on back

Protective & Marine Coatings

Classified
Drinking Water System Component
ANSI/NSF 61
3JGH
Water Quality

MACROPOXY® 646 PW
POTABLE WATER EPOXY

PART A	B58WX610	MILL WHITE
PART A	B58LX600	LIGHT BLUE
PART B	B58VX600	HARDENER
PART B	B58VX605	OAP HARDENER

APPLICATION BULLETIN

4.56

APPLICATION PROCEDURES

Surface preparation must be completed as indicated.

Mix contents of each component thoroughly with low speed power agitation. Make certain no pigment remains on the bottom of the can. Then combine one part by volume of Part A with one part by volume of Part B. Thoroughly agitate the mixture with power agitation. Allow the material to sweat-in as indicated prior to application. Re-stir before using.

If reducer solvent is used, add only after both components have been thoroughly mixed, after sweat-in.

Apply paint at the recommended film thickness and spreading rate as indicated below:

Recommended Spreading Rate per coat:

	Standard		AWWA	
	Min.	Max.	Min.	Max.
Wet mils (microns)	**7.0** 175	**13.5** 340	**4.2** 105	**8.3** 208
Dry mils (microns)	**5.0** 125	**10*** 250*	**3.0** 75	**6.0*** 150*
~Coverage sq ft/gal (m^2/L)	**116** 2.8	**232** 5.6	**192** 4.7	**384** 9.4
Theoretical coverage **sq ft/gal** (m^2/L) @ 1 mil/25 micron dft	**1152** (28.2)			

NOTE: Brush or roll application may require multiple coats to achieve maximum film thickness and uniformity of appearance.

* See Recommended Systems on reverse side

Drying Schedule @ 7.0 mils wet (175 microns):

	@ 40°F/4.5°C	@ 77°F/25°C *50% RH*	@ 100°F/38°C
To touch:	4-5 hours	2 hours	1.5 hours
To handle:	48 hours	8 hours	4.5 hours
To recoat:			
minimum:	48 hours	8 hours	4.5 hours
maximum:	1 year	1 year	1 year
Cure for immersion:	14 days	7 days	4 days
Pot Life:	10 hours	4 hours	2 hours
Sweat-in-Time:	30 minutes	30 minutes	15 minutes

If maximum recoat time is exceeded, abrade surface before recoating.

Drying time is temperature, humidity, and film thickness dependent.

For **Potable Water Service**, allow a minimum cure time of 7 days at 77°F (25°C) prior to placing in service. Sterilize and rinse per AWWA C652.

Application of coating above maximum or below minimum recommended spreading rate may adversely affect coating performance.

CLEAN UP INSTRUCTIONS

Clean spills and spatters immediately with Reducer R7K15. Clean tools immediately after use with Reducer R7K15.

DISCLAIMER

The information and recommendations set forth in this Product Data Sheet are based upon tests conducted by or on behalf of The Sherwin-Williams Company. Such information and recommendations set forth herein are subject to change and pertain to the product offered at the time of publication. Consult your Sherwin-Williams representative to obtain the most recent Product Data Information and Application Bulletin.

PERFORMANCE TIPS

Stripe coat all crevices, welds, and sharp angles to prevent early failure in these areas.

When using spray application, use a 50% overlap with each pass of the gun to avoid holidays, bare areas, and pinholes. If necessary, cross spray at a right angle

Spreading rates are calculated on volume solids and do not include an application loss factor due to surface profile, roughness or porosity of the surface, skill and technique of the applicator, method of application, various surface irregularities, material lost during mixing, spillage, over thinning, climatic conditions, and excessive film build.

Excessive reduction of material can affect film build, appearance, adhesion and UL ANSI/ NSF 61 approval.

Do not mix previously catalyzed material with new.

Do not apply the material beyond recommended pot life.

In order to avoid blockage of spray equipment, clean equipment before use or before periods of extended downtime with Reducer R7K15.

Tinting is not recommended for immersion service.

Quik-Kick Epoxy Accelerator is acceptable for atmospheric use.

Do not use Quik-Kick Epoxy Accelerator for immersion ser-vice when UL certification is required.

Insufficient ventilation, incomplete mixing, miscatalyzation, and external heaters may cause premature yellowing.

Excessive film build, poor ventilation, and cool temperatures may cause solvent entrapment and premature coating failure.

For Immersion Service: (if required) Holiday test in accordance with ASTM D5162 for steel, or ASTM D4787 for concrete.

Guidance on techniques and required equipment to inspect a coating system incorporating Opti-Check OAP Technology can be found in SSPC-TU 11.

Refer to Product Information sheet for additional performance characteristics and properties.

SAFETY PRECAUTIONS

Refer to the MSDS sheet before use.

Published technical data and instructions are subject to change without notice. Contact your Sherwin-Williams representative for additional technical data and instructions.

WARRANTY

The Sherwin-Williams Company warrants our products to be free of manufacturing defects in accord with applicable Sherwin-Williams quality control procedures. Liability for products proven defective, if any, is limited to replacement of the defective product or the refund of the purchase price paid for the defective product as determined by Sherwin-Williams. NO OTHER WARRANTY OR GUARANTEE OF ANY KIND IS MADE BY SHERWIN-WILLIAMS, EXPRESSED OR IMPLIED, STATUTORY, BY OPERATION OF LAW OR OTHERWISE, INCLUDING MERCHANTABILITY AND FITNESS FOR A PARTICULAR PURPOSE.

MATERIAL SAFETY DATA SHEET

B58WX610
06 00

DATE OF PREPARATION
May 8, 2011

SECTION 1 — PRODUCT AND COMPANY IDENTIFICATION

PRODUCT NUMBER
B58WX610
PRODUCT NAME
MACROPOXY® 646 PW Potable Water Epoxy (Part A), Mill White
MANUFACTURER'S NAME
THE SHERWIN-WILLIAMS COMPANY
101 Prospect Avenue N.W.
Cleveland, OH 44115

Telephone Numbers and Websites

Product Information	www.sherwin-williams.com
Regulatory Information	(216) 566-2902 www.paintdocs.com
Medical Emergency	(216) 566-2917
Transportation Emergency*	(800) 424-9300
**for Chemical Emergency ONLY (spill, leak, fire, exposure, or accident)*	

SECTION 2 — COMPOSITION/INFORMATION ON INGREDIENTS

% by Weight	CAS Number	Ingredient	Units	Vapor Pressure
3	**100-41-4**	**Ethylbenzene**		
		ACGIH TLV	100 PPM	7.1 mm
		ACGIH TLV	125 PPM STEL	
		OSHA PEL	100 PPM	
		OSHA PEL	125 PPM STEL	
14	**1330-20-7**	**Xylene**		
		ACGIH TLV	100 PPM	5.9 mm
		ACGIH TLV	150 PPM STEL	
		OSHA PEL	100 PPM	
		OSHA PEL	150 PPM STEL	
10	**68410-23-1**	**Polyamide**		
		ACGIH TLV	Not Available	
		OSHA PEL	Not Available	
8	**14807-96-6**	**Talc**		
		ACGIH TLV	2 mg/m3 as Resp. Dust	
		OSHA PEL	2 mg/m3 as Resp. Dust	
35	**13463-67-7**	**Titanium Dioxide**		
		ACGIH TLV	10 mg/m3 as Dust	
		OSHA PEL	10 mg/m3 Total Dust	
		OSHA PEL	5 mg/m3 Respirable Fraction	

SECTION 3 — HAZARDS IDENTIFICATION

ROUTES OF EXPOSURE
INHALATION of vapor or spray mist.
EYE or SKIN contact with the product, vapor or spray mist.

HMIS Codes

Health	3*
Flammability	3
Reactivity	0

EFFECTS OF OVEREXPOSURE
EYES: Irritation.
SKIN: Prolonged or repeated exposure may cause irritation.
INHALATION: Irritation of the upper respiratory system.

May cause nervous system depression. Extreme overexposure may result in unconsciousness and possibly death.
Prolonged overexposure to hazardous ingredients in Section 2 may cause adverse chronic effects to the following organs or systems:
- the liver
- the urinary system
- the reproductive system

SIGNS AND SYMPTOMS OF OVEREXPOSURE

Headache, dizziness, nausea, and loss of coordination are indications of excessive exposure to vapors or spray mists.
Redness and itching or burning sensation may indicate eye or excessive skin exposure.

MEDICAL CONDITIONS AGGRAVATED BY EXPOSURE

May cause allergic skin reaction in susceptible persons or skin sensitization.

CANCER INFORMATION

For complete discussion of toxicology data refer to Section 11.

SECTION 4 — FIRST AID MEASURES

EYES: Flush eyes with large amounts of water for 15 minutes. Get medical attention.
SKIN: Wash affected area thoroughly with soap and water.
Remove contaminated clothing and launder before re-use.
INHALATION: If affected, remove from exposure. Restore breathing. Keep warm and quiet.
INGESTION: Do not induce vomiting. Get medical attention immediately.

SECTION 5 — FIRE FIGHTING MEASURES

FLASH POINT	LEL	UEL	FLAMMABILITY CLASSIFICATION
85 °F PMCC	1.0	7.0	RED LABEL -- Flammable, Flash below 100 °F (38 °C)

EXTINGUISHING MEDIA

Carbon Dioxide, Dry Chemical, Foam

UNUSUAL FIRE AND EXPLOSION HAZARDS

Closed containers may explode when exposed to extreme heat.
Application to hot surfaces requires special precautions.
During emergency conditions overexposure to decomposition products may cause a health hazard. Symptoms may not be immediately apparent. Obtain medical attention.

SPECIAL FIRE FIGHTING PROCEDURES

Full protective equipment including self-contained breathing apparatus should be used.
Water spray may be ineffective. If water is used, fog nozzles are preferable. Water may be used to cool closed containers to prevent pressure build-up and possible autoignition or explosion when exposed to extreme heat.

SECTION 6 — ACCIDENTAL RELEASE MEASURES

STEPS TO BE TAKEN IN CASE MATERIAL IS RELEASED OR SPILLED

Remove all sources of ignition. Ventilate the area.
Remove with inert absorbent.

SECTION 7 — HANDLING AND STORAGE

STORAGE CATEGORY

DOL Storage Class IC

PRECAUTIONS TO BE TAKEN IN HANDLING AND STORAGE

Contents are FLAMMABLE. Keep away from heat, sparks, and open flame.
During use and until all vapors are gone: Keep area ventilated - Do not smoke - Extinguish all flames, pilot lights, and heaters - Turn off stoves, electric tools and appliances, and any other sources of ignition.
Consult NFPA Code. Use approved Bonding and Grounding procedures.
Keep container closed when not in use. Transfer only to approved containers with complete and appropriate labeling. Do not take internally. Keep out of the reach of children.

SECTION 8 — EXPOSURE CONTROLS/PERSONAL PROTECTION

PRECAUTIONS TO BE TAKEN IN USE

Use only with adequate ventilation.
Avoid contact with skin and eyes. Avoid breathing vapor and spray mist.
Wash hands after using.
This coating may contain materials classified as nuisance particulates (listed "as Dust" in Section 2) which may be present at hazardous levels only during sanding or abrading of the dried film. If no specific dusts are listed in Section 2, the applicable limits for nuisance dusts are ACGIH TLV 10 mg/m3 (total dust), 3 mg/m3 (respirable fraction), OSHA PEL 15 mg/m3 (total dust), 5 mg/m3 (respirable fraction).

VENTILATION

Local exhaust preferable. General exhaust acceptable if the exposure to materials in Section 2 is maintained below applicable exposure limits. Refer to OSHA Standards 1910.94, 1910.107, 1910.108.

RESPIRATORY PROTECTION

If personal exposure cannot be controlled below applicable limits by ventilation, wear a properly fitted organic vapor/particulate respirator approved by NIOSH/MSHA for protection against materials in Section 2.
When sanding or abrading the dried film, wear a dust/mist respirator approved by NIOSH/MSHA for dust which may be generated from this product, underlying paint, or the abrasive.

PROTECTIVE GLOVES

Wear gloves which are recommended by glove supplier for protection against materials in Section 2.

EYE PROTECTION

Wear safety spectacles with unperforated sideshields.

OTHER PRECAUTIONS

This product must be mixed with other components before use. Before opening the packages, READ AND FOLLOW WARNING LABELS ON ALL COMPONENTS.

Intentional misuse by deliberately concentrating and inhaling the contents can be harmful or fatal.

SECTION 9 — PHYSICAL AND CHEMICAL PROPERTIES

PRODUCT WEIGHT	12.41 lb/gal	1487 g/l
SPECIFIC GRAVITY	1.49	
BOILING POINT	277 - 292 °F	136 - 144 °C
MELTING POINT	Not Available	
VOLATILE VOLUME	29%	
EVAPORATION RATE	Slower than ether	
VAPOR DENSITY	Heavier than air	
SOLUBILITY IN WATER	N.A.	

VOLATILE ORGANIC COMPOUNDS (VOC Theoretical - As Packaged)

2.09 lb/gal	251 g/l	Less Water and Federally Exempt Solvents
2.09 lb/gal	251 g/l	Emitted VOC

SECTION 10 — STABILITY AND REACTIVITY

STABILITY — Stable

CONDITIONS TO AVOID

None known.

INCOMPATIBILITY

None known.

HAZARDOUS DECOMPOSITION PRODUCTS

By fire: Carbon Dioxide, Carbon Monoxide

HAZARDOUS POLYMERIZATION

Will not occur

SECTION 11 — TOXICOLOGICAL INFORMATION

CHRONIC HEALTH HAZARDS

Reports have associated repeated and prolonged overexposure to solvents with permanent brain and nervous system damage.

Ethylbenzene is classified by IARC as possibly carcinogenic to humans (2B) based on inadequate evidence in humans and sufficient evidence in laboratory animals. Lifetime inhalation exposure of rats and mice to high ethylbenzene concentrations resulted in increases in certain types of cancer, including kidney tumors in rats and lung and liver tumors in mice. These effects were not observed in animals exposed to lower concentrations. There is no evidence that ethylbenzene causes cancer in humans.

IARC's Monograph No. 93 reports there is sufficient evidence of carcinogenicity in experimental rats exposed to titanium dioxide but inadequate evidence for carcinogenicity in humans and has assigned a Group 2B rating. In addition, the IARC summary concludes, "No significant exposure to titanium dioxide is thought to occur during the use of products in which titanium is bound to other materials, such as paint."

TOXICOLOGY DATA

CAS No.	Ingredient Name			
100-41-4	**Ethylbenzene**			
		LC50 RAT	4HR	Not Available
		LD50 RAT		3500 mg/kg
1330-20-7	**Xylene**			
		LC50 RAT	4HR	5000 ppm
		LD50 RAT		4300 mg/kg
68410-23-1	**Polyamide**			
		LC50 RAT	4HR	Not Available
		LD50 RAT		8000. mg/kg
14807-96-6	**Talc**			
		LC50 RAT	4HR	Not Available
		LD50 RAT		Not Available
13463-67-7	**Titanium Dioxide**			
		LC50 RAT	4HR	Not Available
		LD50 RAT		Not Available

SECTION 12 — ECOLOGICAL INFORMATION

ECOTOXICOLOGICAL INFORMATION

No data available.

SECTION 13 — DISPOSAL CONSIDERATIONS

WASTE DISPOSAL METHOD

Waste from this product may be hazardous as defined under the Resource Conservation and Recovery Act (RCRA) 40 CFR 261.
Waste must be tested for ignitability to determine the applicable EPA hazardous waste numbers.
Incinerate in approved facility. Do not incinerate closed container. Dispose of in accordance with Federal, State/Provincial, and Local regulations regarding pollution.

SECTION 14 — TRANSPORT INFORMATION

Multi-modal shipping descriptions are provided for informational purposes and do not consider container sizes. The presence of a shipping description for a particular mode of transport (ocean, air, etc.), does not indicate that the product is packaged suitably for that mode of transport. All packaging must be reviewed for suitability prior to shipment, and compliance with the applicable regulations is the sole responsibility of the person offering the product for transport.

US Ground (DOT)

5 Liters (1.3 Gallons) and Less may be Classed as CONSUMER COMMODITY, ORM-D
Larger Containers are Regulated as:
UN1263, PAINT, 3, PG III, (ERG#128)

DOT (Dept of Transportation) Hazardous Substances & Reportable Quantities

Ethyl benzene 1000 lb RQ
Xylenes (isomers and mixture) 100 lb RQ

Bulk Containers may be Shipped as (check reportable quantities):

RQ, UN1263, PAINT, 3, PG III, (XYLENES (ISOMERS AND MIXTURE)), (ERG#128)

Canada (TDG)

UN1263, PAINT, CLASS 3, PG III, LIMITED QUANTITY, (ERG#128)

IMO

5 Liters (1.3 Gallons) and Less may be Shipped as Limited Quantity.
UN1263, PAINT, CLASS 3, PG III, (29 C c.c.), EmS F-E, S-E, ADR (D/E)

IATA/ICAO

UN1263, PAINT, 3, PG III

SECTION 15 — REGULATORY INFORMATION

SARA 313 *(40 CFR 372.65C)* SUPPLIER NOTIFICATION

CAS No.	CHEMICAL/COMPOUND	% by WT	% Element
100-41-4	Ethylbenzene	3	
1330-20-7	Xylene	14	

CALIFORNIA PROPOSITION 65

WARNING: This product contains chemicals known to the State of California to cause cancer and birth defects or other reproductive harm.

TSCA CERTIFICATION

All chemicals in this product are listed, or are exempt from listing, on the TSCA Inventory.

SECTION 16 — OTHER INFORMATION

This product has been classified in accordance with the hazard criteria of the Canadian Controlled Products Regulations (CPR) and the MSDS contains all of the information required by the CPR.

The above information pertains to this product as currently formulated, and is based on the information available at this time. Addition of reducers or other additives to this product may substantially alter the composition and hazards of the product. Since conditions of use are outside our control, we make no warranties, express or implied, and assume no liability in connection with any use of this information.

Protective & Marine Coatings

RECOATABLE EPOXY PRIMER

PART G	B67A5	LIGHT GRAY
PART G	B67H5	TAN
PART G	B67R5	RED OXIDE
PART H	B67V5	HARDENER

Revised 5/11

PRODUCT INFORMATION

4.45

PRODUCT DESCRIPTION

RECOATABLE EPOXY PRIMER is a rust inhibitive high build catalyzed polyamide/bisphenol A epoxy primer designed for fast dry and quick or extended recoatability.

- Meets Class A requirements for Slip Coefficient, .50 (Red Oxide only)
- Long pot life
- High build coating for economical application
- One year recoatability
- Low temperature application - down to 35°F (1.5°C)
- Corrosion resistant (contains zinc phosphate)
- Outstanding application properties

PRODUCT CHARACTERISTICS

Finish:	Flat
Color:	Red Oxide, Tan, Light Gray
Volume Solids:	65% ± 2%, mixed
Weight Solids:	81% ± 2%, mixed
VOC (EPA Method 24): mixed	Unreduced: <320 g/L; 2.67 lb/gal Reduced 5%: <340 g/L; 2.88 lb/gal
Mix Ratio:	1:1 by volume

Recommended Spreading Rate per coat:

	Minimum	Maximum
Wet mils (microns)	**6.0** (150)	**9.0** (225)
Dry mils (microns)	**4.0*** (100)	**6.0*** (150)
~Coverage sq ft/gal (m^2/L)	**175** (4.3)	**260** (6.4)
Theoretical coverage **sq ft/gal** (m^2/L) @ 1 mil / 25 microns dft	**1040** (25.5)	

*See Performance Tips section

NOTE: Brush or roll application may require multiple coats to achieve maximum film thickness and uniformity of appearance.

Drying Schedule @ 6.0 mils wet (150 microns):

	@ 35°F/1.5°C	@ 77°F/25°C *50% RH*	@ 120°F/49°C
To touch:	1 hour	15 minutes	10 minutes
Tack free:	2 hours	30 minutes	15 minutes
To recoat:			
minimum:	6 hours	2 hours	30 minutes
maximum:	1 year	1 year	1 year
To cure:	14 days	14 days	2 days
Pot Life:	8+ hours	8 hours	3 hours
Sweat-in-time:	1 hour	30 minutes	10 minutes

If maximum recoat time is exceeded, abrade surface before recoating.

Drying time is temperature, humidity, and film thickness dependent.

Shelf Life:	36 months, unopened Store indoors at 40°F (4.5°C) to 100°F (38°C).
Flash Point:	80°F (27°C), PMCC, mixed
Reducer/Clean Up:	
Below 80°F (27°C):	Reducer #54, R7K54
Above 80°F (27°C):	Reducer #100, R7K100 or R7K104
In California:	Reducer R7K111

RECOMMENDED USES

For use as a shop or field applied epoxy primer where a variable recoat window is required due to construction schedules, distribution logistics and environmental considerations. Affords flexibility in projects when completion schedules cannot be specified.

- Primer for structural steel
- Paper mills
- Power plants
- Suitable for use in USDA inspected facilities
- Marine applications
- Storage tanks

PERFORMANCE CHARACTERISTICS

Substrate*: Steel

Surface Preparation*: SSPC-SP6/NACE 3

System Tested*:

1 ct. Recoatable Epoxy Primer @ 5.0 mils (125 microns) dft

*unless otherwise noted below

Test Name	Test Method	Results
Abrasion Resistance	ASTM D4060, CS17 wheel, 1000 cycles, 1 kg load	200 mg loss
Accelerated Weathering - QUV[1]	ASTM D4587, QUV-A, 5,000 hours	Passes
Adhesion	ASTM D4541	1050 psi
Corrosion Weathering	ASTM D5894, 13 cycles, 4,368 hours	Rating 10 per ASTM D714 for Blistering; Rating 7 per ASTM D610 for Rusting
Direct Impact Resistance	ASTM D2794	160 in. lbs.
Dry Heat Resistance	ASTM D2485	250°F (121°C) (discolors)
Flexibility	ASTM D522, 180° bend, 1" mandrel	Passes
Moisture Condensation Resistance	ASTM D4585, 100°F (38°C), 2000 hours	Passes, no cracking or delamination
Pencil Hardness	ASTM D3363	3H
Salt Fog Resistance[1]	ASTM B117, 5,600 hours	Passes, no cracking or delamination
Slip Coefficient, Red Oxide	AISC Specification for Structural Joints Using ASTM A325 or ASTM A490 Bolts	Class A, 0.50

Epoxy coatings may darken or yellow following application and curing.

Provides performance comparable to products formulated to federal specifications: Mil-P-23377, Mil-P-53022

Footnotes:

[1] Acrolon 218 HS topcoat

continued on back

Protective & Marine Coatings RECOATABLE EPOXY PRIMER

PART G	B67A5	LIGHT GRAY
PART G	B67H5	TAN
PART G	B67R5	RED OXIDE
PART H	B67V5	HARDENER

PRODUCT INFORMATION

4.45

RECOMMENDED SYSTEMS

		Dry Film Thickness / ct. Mils	(Microns)
Steel, catalyzed epoxy topcoat:			
1 ct.	Recoatable Epoxy Primer	4.0-6.0	(100-150)
2 cts.	Tile-Clad HS Epoxy	2.5-4.0	(63-100)
Steel, polyurethane topcoat:			
1 ct.	Recoatable Epoxy Primer	4.0-6.0	(100-150)
1-2 cts.	Hi-Solids Polyurethane	3.0-4.0	(75-100)
Steel, acrylic epoxy topcoat:			
1 ct.	Recoatable Epoxy Primer	4.0-6.0	(100-150)
2 cts.	Water Based Catalyzed Epoxy	2.5-3.0	(63-75)
Steel, acrylic topcoat:			
1 ct.	Recoatable Epoxy Primer	4.0-6.0	(100-150)
2 cts.	DTM Acrylic Coating	2.5-4.0	(63-100)
Galvanized:			
1 ct.	Recoatable Epoxy Primer	4.0-6.0	(100-150)
2 cts.	Tile-Clad HS Epoxy	2.5-4.0	(63-100)

The systems listed above are representative of the product's use, other systems may be appropriate.

DISCLAIMER

The information and recommendations set forth in this Product Data Sheet are based upon tests conducted by or on behalf of The Sherwin-Williams Company. Such information and recommendations set forth herein are subject to change and pertain to the product offered at the time of publication. Consult your Sherwin-Williams representative to obtain the most recent Product Data Information and Application Bulletin.

SURFACE PREPARATION

Surface must be clean, dry, and in sound condition. Remove all oil, dust, grease, dirt, loose rust, and other foreign material to ensure adequate adhesion.

Refer to product Application Bulletin for detailed surface preparation information.

Minimum recommended surface preparation:

Iron & Steel: SSPC-SP6/NACE 3, 2 mil (50 micron) profile

Galvanizing: SSPC-SP1

Surface Preparation Standards

	Condition of Surface	ISO 8501-1 BS7079:A1	Swedish Std. SIS055900	SSPC	NACE
White Metal		Sa 3	Sa 3	SP 5	1
Near White Metal		Sa 2.5	Sa 2.5	SP 10	2
Commercial Blast		Sa 2	Sa 2	SP 6	3
Brush-Off Blast		Sa 1	Sa 1	SP 7	4
Hand Tool Cleaning	Rusted	C St 2	C St 2	SP 2	-
	Pitted & Rusted	D St 2	D St 2	SP 2	-
Power Tool Cleaning	Rusted	C St 3	C St 3	SP 3	-
	Pitted & Rusted	D St 3	D St 3	SP 3	-

TINTING

Do not tint.

APPLICATION CONDITIONS

Temperature:

air and surface: 35°F (1.6°C) minimum, 140°F (60°C) maximum

material: 50°F (10°C) minimum
At least 5°F (2.8°C) above dew point

Relative humidity: 85% maximum

Refer to product Application Bulletin for detailed application information.

ORDERING INFORMATION

Packaging:

Part G: 1 gallon (3.78L) and 5 gallon (18.9L) containers

Part H: 1 gallon (3.78L) and 5 gallon (18.9L) containers

Weight: 13.26 ± 0.2 lb/gal ; 1.6 Kg/L, mixed

SAFETY PRECAUTIONS

Refer to the MSDS sheet before use.

Published technical data and instructions are subject to change without notice. Contact your Sherwin-Williams representative for additional technical data and instructions.

WARRANTY

The Sherwin-Williams Company warrants our products to be free of manufacturing defects in accord with applicable Sherwin-Williams quality control procedures. Liability for products proven defective, if any, is limited to replacement of the defective product or the refund of the purchase price paid for the defective product as determined by Sherwin-Williams. NO OTHER WARRANTY OR GUARANTEE OF ANY KIND IS MADE BY SHERWIN-WILLIAMS, EXPRESSED OR IMPLIED, STATUTORY, BY OPERATION OF LAW OR OTHERWISE, INCLUDING MERCHANTABILITY AND FITNESS FOR A PARTICULAR PURPOSE.

Protective & Marine Coatings

RECOATABLE EPOXY PRIMER

PART G	B67A5	LIGHT GRAY
PART G	B67H5	TAN
PART G	B67R5	RED OXIDE
PART H	B67V5	HARDENER

Revised 5/11

APPLICATION BULLETIN

4.45

SURFACE PREPARATIONS

Surface must be clean, dry, and in sound condition. Remove all oil, dust, grease, dirt, loose rust, and other foreign material to ensure adequate adhesion.

Iron & Steel (atmospheric service)
Remove all oil and grease from surface by Solvent Cleaning per SSPC-SP1. Minimum surface preparation is Commercial Blast Cleaning per SSPC-SP6/NACE 3. For better performance, use Near White Metal Blast Cleaning per SSPC-SP10/NACE 2. Blast clean all surfaces using a sharp, angular abrasive for optimum surface profile (2 mils / 50 microns). Prime any bare steel the same day as it is cleaned.

Galvanized Steel
Allow to weather a minimum of six months prior to coating. Solvent Clean per SSPC-SP1. When weathering is not possible, or the surface has been treated with chromates or silicates, first Solvent Clean per SSPC-SP1 and apply a test patch. Allow paint to dry at least one week before testing adhesion. If adhesion is poor, brush blasting per SSPC-SP7 is necessary to remove these treatments. Rusty galvanizing requires a minimum of Hand Tool Cleaning per SSPC-SP2, prime the area the same day as cleaned.

Previously Painted Surfaces
If in sound condition, clean the surface of all foreign material. Smooth, hard or glossy coatings and surfaces should be dulled by abrading the surface. Apply a test area, allowing paint to dry one week before testing adhesion. If adhesion is poor, or if this product attacks the previous finish, removal of the previous coating may be necessary. If paint is peeling or badly weathered, clean surface to sound substrate and treat as a new surface as above.

Surface Preparation Standards

	Condition of Surface	ISO 8501-1 BS7079:A1	Swedish Std. SIS055900	SSPC	NACE
White Metal		Sa 3	Sa 3	SP 5	1
Near White Metal		Sa 2.5	Sa 2.5	SP 10	2
Commercial Blast		Sa 2	Sa 2	SP 6	3
Brush-Off Blast		Sa 1	Sa 1	SP 7	4
Hand Tool Cleaning	Rusted	C St 2	C St 2	SP 2	-
	Pitted & Rusted	D St 2	D St 2	SP 2	-
Power Tool Cleaning	Rusted	C St 3	C St 3	SP 3	-
	Pitted & Rusted	D St 3	D St 3	SP 3	-

APPLICATION CONDITIONS

Temperature:	
air and surface:	35°F (1.6°C) minimum, 140°F (60°C) maximum
material:	50°F (10°C) minimum At least 5°F (2.8°C) above dew point
Relative humidity:	85% maximum

APPLICATION EQUIPMENT

The following is a guide. Changes in pressures and tip sizes may be needed for proper spray characteristics. Always purge spray equipment before use with listed reducer. Any reduction must be compliant with existing VOC regulations and compatible with the existing environmental and application conditions.

Reducer/Clean Up
Below 80°F (27°C) .....Reducer #54, R7K54
Above 80°F (27°C).....Reducer #100, R7K100 or R7K104
In California.....Reducer R7K111

Airless Spray
Pressure.....2400 psi
Hose.....1/4" ID
Tip .....017"
Filter.....60 mesh
Reduction.....As needed up to 5% by volume

Brush
Brush.....Natural Bristle
Reduction.....Not recommended

Roller
Cover .....3/8" - 1/2" woven with solvent resistant core
Reduction.....Not recommended

Plural Component Spray ...Acceptable
Refer to April 2010 Technical Bulletin - "Application Guidelines for Macropoxy 646 & Recoatable Epoxy Primer Utilizing Plural Component Equipment"

If specific application equipment is not listed above, equivalent equipment may be substituted.

continued on back

Protective & Marine Coatings RECOATABLE EPOXY PRIMER

PART G	B67A5	LIGHT GRAY
PART G	B67H5	TAN
PART G	B67R5	RED OXIDE
PART H	B67V5	HARDENER

APPLICATION BULLETIN

4.45

APPLICATION PROCEDURES

Surface preparation must be completed as indicated.

Mix contents of each component thoroughly with low speed power agitation. Make certain no pigment remains on the bottom of the cans. Then combine one part by volume of Part G with one part by volume of Part H. Thoroughly agitate the mixture with power agitation. Allow the material to sweat-in as indicated. Re-stir before using.

If reducer solvent is used, add only after both components have been thoroughly mixed, after sweat-in.

Apply paint at the recommended film thickness and spreading rate as indicated below:

Recommended Spreading Rate per coat:

	Minimum	Maximum
Wet mils (microns)	**6.0** (150)	**9.0** (225)
Dry mils (microns)	**4.0*** (100)	**6.0*** (150)
~Coverage sq ft/gal (m^2/L)	**175** (4.3)	**260** (6.4)
Theoretical coverage **sq ft/gal** (m^2/L) @ 1 mil / 25 microns dft	**1040** (25.5)	

*See Performance Tips section

NOTE: Brush or roll application may require multiple coats to achieve maximum film thickness and uniformity of appearance.

Drying Schedule @ 6.0 mils wet (150 microns):

	@ 35°F/1.5°C	@ 77°F/25°C *50% RH*	@ 120°F/49°C
To touch:	1 hour	15 minutes	10 minutes
Tack free:	2 hours	30 minutes	15 minutes
To recoat:			
minimum:	6 hours	2 hours	30 minutes
maximum:	1 year	1 year	1 year
To cure:	14 days	14 days	2 days

If maximum recoat time is exceeded, abrade surface before recoating.

Drying time is temperature, humidity, and film thickness dependent.

Pot Life:	8+ hours	8 hours	3 hours
Sweat-in-time:	1 hour	30 minutes	10 minutes

Application of coating above maximum or below minimum recommended spreading rate may adversely affect coating performance.

CLEAN UP INSTRUCTIONS

Clean spills and spatters immediately with Reducer #54, R7K54. Clean tools immediately after use with Reducer #54, R7K54. Follow manufacturer's safety recommendations when using any solvent.

DISCLAIMER

The information and recommendations set forth in this Product Data Sheet are based upon tests conducted by or on behalf of The Sherwin-Williams Company. Such information and recommendations set forth herein are subject to change and pertain to the product offered at the time of publication. Consult your Sherwin-Williams representative to obtain the most recent Product Data Information and Application Bulletin.

PERFORMANCE TIPS

Stripe coat all crevices, welds, and sharp angles to prevent early failure in these areas.

When using spray application, use a 50% overlap with each pass of the gun to avoid holidays, bare areas, and pinholes. If necessary, cross spray at a right angle.

Spreading rates are calculated on volume solids and do not include an application loss factor due to surface profile, roughness or porosity of the surface, skill and technique of the applicator, method of application, various surface irregularities, material lost during mixing, spillage, overthinning, climatic conditions, and excessive film build.

Excessive reduction of material can affect film build, appearance, and adhesion.

Do not apply the material beyond recommended pot life.

Do not mix previously catalyzed material with new.

In order to avoid blockage of spray equipment, clean equipment before use or before periods of extended downtime with Reducer #54, R7K54.

Material must be at least 50°F (10°C) prior to catalyzing.

Quik-Kick Epoxy Accelerator is acceptable for use. See data page 4.99 for details.

When coating over aluminum and galvanizing, recommended dft is 2-4 mils (50-100 microns).

Refer to Product Information sheet for additional performance characteristics and properties.

SAFETY PRECAUTIONS

Refer to the MSDS sheet before use.

Published technical data and instructions are subject to change without notice. Contact your Sherwin-Williams representative for additional technical data and instructions.

WARRANTY

The Sherwin-Williams Company warrants our products to be free of manufacturing defects in accord with applicable Sherwin-Williams quality control procedures. Liability for products proven defective, if any, is limited to replacement of the defective product or the refund of the purchase price paid for the defective product as determined by Sherwin-Williams. NO OTHER WARRANTY OR GUARANTEE OF ANY KIND IS MADE BY SHERWIN-WILLIAMS, EXPRESSED OR IMPLIED, STATUTORY, BY OPERATION OF LAW OR OTHERWISE, INCLUDING MERCHANTABILITY AND FITNESS FOR A PARTICULAR PURPOSE.

MATERIAL SAFETY DATA SHEET

B67A5
17 00

DATE OF PREPARATION
May 8, 2011

SECTION 1 — PRODUCT AND COMPANY IDENTIFICATION

PRODUCT NUMBER
B67A5

PRODUCT NAME
Recoatable Epoxy Primer (Part G), Light Gray

MANUFACTURER'S NAME
THE SHERWIN-WILLIAMS COMPANY
101 Prospect Avenue N.W.
Cleveland, OH 44115

Telephone Numbers and Websites

Product Information	www.sherwin-williams.com
Regulatory Information	(216) 566-2902 www.paintdocs.com
Medical Emergency	(216) 566-2917
Transportation Emergency*	(800) 424-9300
**for Chemical Emergency ONLY (spill, leak, fire, exposure, or accident)*	

SECTION 2 — COMPOSITION/INFORMATION ON INGREDIENTS

% by Weight	CAS Number	Ingredient	Units	Vapor Pressure
2	100-41-4	**Ethylbenzene**		
		ACGIH TLV	100 PPM	7.1 mm
		ACGIH TLV	125 PPM STEL	
		OSHA PEL	100 PPM	
		OSHA PEL	125 PPM STEL	
12	1330-20-7	**Xylene**		
		ACGIH TLV	100 PPM	5.9 mm
		ACGIH TLV	150 PPM STEL	
		OSHA PEL	100 PPM	
		OSHA PEL	150 PPM STEL	
3	2807-30-9	**2-Propoxyethanol**		
		ACGIH TLV	Not Available	1.3 mm
		OSHA PEL	Not Available	
7	68410-23-1	**Polyamide**		
		ACGIH TLV	Not Available	
		OSHA PEL	Not Available	
47	14808-60-7	**Quartz**		
		ACGIH TLV	0.025 mg/m3 as Resp. Dust	
		OSHA PEL	0.1 mg/m3 as Resp. Dust	
14	13463-67-7	**Titanium Dioxide**		
		ACGIH TLV	10 mg/m3 as Dust	
		OSHA PEL	10 mg/m3 Total Dust	
		OSHA PEL	5 mg/m3 Respirable Fraction	
2	1314-13-2	**Zinc Oxide**		
		ACGIH TLV	10 mg/m3 as Dust	
		OSHA PEL	10 mg/m3 Total Dust	
		OSHA PEL	5 mg/m3 Respirable Fraction	

SECTION 3 — HAZARDS IDENTIFICATION

ROUTES OF EXPOSURE
INHALATION of vapor or spray mist.
EYE or SKIN contact with the product, vapor or spray mist.

EFFECTS OF OVEREXPOSURE
EYES: Irritation.
SKIN: Prolonged or repeated exposure may cause irritation.
INHALATION: Irritation of the upper respiratory system.

HMIS Codes

Health	3*
Flammability	3
Reactivity	0

May cause nervous system depression. Extreme overexposure may result in unconsciousness and possibly death.
Prolonged overexposure to hazardous ingredients in Section 2 may cause adverse chronic effects to the following organs or systems:

- the liver
- the urinary system
- the reproductive system

SIGNS AND SYMPTOMS OF OVEREXPOSURE

Headache, dizziness, nausea, and loss of coordination are indications of excessive exposure to vapors or spray mists.
Redness and itching or burning sensation may indicate eye or excessive skin exposure.

MEDICAL CONDITIONS AGGRAVATED BY EXPOSURE

May cause allergic skin reaction in susceptible persons or skin sensitization.

CANCER INFORMATION

For complete discussion of toxicology data refer to Section 11.

SECTION 4 — FIRST AID MEASURES

EYES: Flush eyes with large amounts of water for 15 minutes. Get medical attention.
SKIN: Wash affected area thoroughly with soap and water.
If irritation persists or occurs later, get medical attention.
Remove contaminated clothing and launder before re-use.
INHALATION: If affected, remove from exposure. Restore breathing. Keep warm and quiet.
INGESTION: Do not induce vomiting. Get medical attention immediately.

SECTION 5 — FIRE FIGHTING MEASURES

FLASH POINT	LEL	UEL	FLAMMABILITY CLASSIFICATION
80 °F PMCC	1.0	15.8	RED LABEL -- Flammable, Flash below 100 °F (38 °C)

EXTINGUISHING MEDIA

Carbon Dioxide, Dry Chemical, Foam

UNUSUAL FIRE AND EXPLOSION HAZARDS

Closed containers may explode when exposed to extreme heat.
Application to hot surfaces requires special precautions.
During emergency conditions overexposure to decomposition products may cause a health hazard. Symptoms may not be immediately apparent. Obtain medical attention.

SPECIAL FIRE FIGHTING PROCEDURES

Full protective equipment including self-contained breathing apparatus should be used.
Water spray may be ineffective. If water is used, fog nozzles are preferable. Water may be used to cool closed containers to prevent pressure build-up and possible autoignition or explosion when exposed to extreme heat.

SECTION 6 — ACCIDENTAL RELEASE MEASURES

STEPS TO BE TAKEN IN CASE MATERIAL IS RELEASED OR SPILLED

Remove all sources of ignition. Ventilate the area.
Remove with inert absorbent.

SECTION 7 — HANDLING AND STORAGE

STORAGE CATEGORY

DOL Storage Class IC

PRECAUTIONS TO BE TAKEN IN HANDLING AND STORAGE

Contents are FLAMMABLE. Keep away from heat, sparks, and open flame.
During use and until all vapors are gone: Keep area ventilated - Do not smoke - Extinguish all flames, pilot lights, and heaters - Turn off stoves, electric tools and appliances, and any other sources of ignition.
Consult NFPA Code. Use approved Bonding and Grounding procedures.
Keep container closed when not in use. Transfer only to approved containers with complete and appropriate labeling. Do not take internally. Keep out of the reach of children.

SECTION 8 — EXPOSURE CONTROLS/PERSONAL PROTECTION

PRECAUTIONS TO BE TAKEN IN USE

Use only with adequate ventilation.
Avoid contact with skin and eyes. Avoid breathing vapor and spray mist.
Wash hands after using.
This coating may contain materials classified as nuisance particulates (listed "as Dust" in Section 2) which may be present at hazardous levels only during sanding or abrading of the dried film. If no specific dusts are listed in Section 2, the applicable limits for nuisance dusts are ACGIH TLV 10 mg/m3 (total dust), 3 mg/m3 (respirable fraction), OSHA PEL 15 mg/m3 (total dust), 5 mg/m3 (respirable fraction).

VENTILATION

Local exhaust preferable. General exhaust acceptable if the exposure to materials in Section 2 is maintained below applicable exposure limits. Refer to OSHA Standards 1910.94, 1910.107, 1910.108.

RESPIRATORY PROTECTION

If personal exposure cannot be controlled below applicable limits by ventilation, wear a properly fitted organic vapor/particulate respirator approved by NIOSH/MSHA for protection against materials in Section 2.

When sanding or abrading the dried film, wear a dust/mist respirator approved by NIOSH/MSHA for dust which may be generated from this product, underlying paint, or the abrasive.

PROTECTIVE GLOVES

Wear gloves which are recommended by glove supplier for protection against materials in Section 2.

EYE PROTECTION

Wear safety spectacles with unperforated sideshields.

OTHER PROTECTIVE EQUIPMENT

Use of barrier cream on exposed skin is recommended.

OTHER PRECAUTIONS

This product must be mixed with other components before use. Before opening the packages, READ AND FOLLOW WARNING LABELS ON ALL COMPONENTS.

Intentional misuse by deliberately concentrating and inhaling the contents can be harmful or fatal.

SECTION 9 — PHYSICAL AND CHEMICAL PROPERTIES

PRODUCT WEIGHT	14.59 lb/gal	1748 g/l
SPECIFIC GRAVITY	1.76	
BOILING POINT	277 - 308 °F	136 - 153 °C
MELTING POINT	Not Available	
VOLATILE VOLUME	35%	
EVAPORATION RATE	Slower than ether	
VAPOR DENSITY	Heavier than air	
SOLUBILITY IN WATER	N.A.	

VOLATILE ORGANIC COMPOUNDS (VOC Theoretical - As Packaged)

2.56 lb/gal	307 g/l	Less Water and Federally Exempt Solvents
2.56 lb/gal	307 g/l	Emitted VOC

SECTION 10 — STABILITY AND REACTIVITY

STABILITY — Stable

CONDITIONS TO AVOID

None known.

INCOMPATIBILITY

None known.

HAZARDOUS DECOMPOSITION PRODUCTS

By fire: Carbon Dioxide, Carbon Monoxide

HAZARDOUS POLYMERIZATION

Will not occur

SECTION 11 — TOXICOLOGICAL INFORMATION

CHRONIC HEALTH HAZARDS

Reports have associated repeated and prolonged overexposure to solvents with permanent brain and nervous system damage.

Ethylbenzene is classified by IARC as possibly carcinogenic to humans (2B) based on inadequate evidence in humans and sufficient evidence in laboratory animals. Lifetime inhalation exposure of rats and mice to high ethylbenzene concentrations resulted in increases in certain types of cancer, including kidney tumors in rats and lung and liver tumors in mice. These effects were not observed in animals exposed to lower concentrations. There is no evidence that ethylbenzene causes cancer in humans.

Crystalline Silica (Quartz, Cristobalite) is listed by IARC and NTP. Long term exposure to high levels of silica dust, which can occur only when sanding or abrading the dry film, may cause lung damage (silicosis) and possibly cancer.

IARC's Monograph No. 93 reports there is sufficient evidence of carcinogenicity in experimental rats exposed to titanium dioxide but inadequate evidence for carcinogenicity in humans and has assigned a Group 2B rating. In addition, the IARC summary concludes, "No significant exposure to titanium dioxide is thought to occur during the use of products in which titanium is bound to other materials, such as paint."

TOXICOLOGY DATA

CAS No.	Ingredient Name			
100-41-4	**Ethylbenzene**			
		LC50 RAT	4HR	Not Available
		LD50 RAT		3500 mg/kg
1330-20-7	**Xylene**			
		LC50 RAT	4HR	5000 ppm
		LD50 RAT		4300 mg/kg
2807-30-9	**2-Propoxyethanol**			
		LC50 RAT	4HR	Not Available
		LD50 RAT		3090 mg/kg
68410-23-1	**Polyamide**			
		LC50 RAT	4HR	Not Available
		LD50 RAT		Not Available
14808-60-7	**Quartz**			
		LC50 RAT	4HR	Not Available
		LD50 RAT		Not Available
13463-67-7	**Titanium Dioxide**			
		LC50 RAT	4HR	Not Available
		LD50 RAT		Not Available
1314-13-2	**Zinc Oxide**			
		LC50 RAT	4HR	Not Available
		LD50 RAT		Not Available

SECTION 12 — ECOLOGICAL INFORMATION

ECOTOXICOLOGICAL INFORMATION

No data available.

SECTION 13 — DISPOSAL CONSIDERATIONS

WASTE DISPOSAL METHOD

Waste from this product may be hazardous as defined under the Resource Conservation and Recovery Act (RCRA) 40 CFR 261.
Waste must be tested for ignitability to determine the applicable EPA hazardous waste numbers.
Incinerate in approved facility. Do not incinerate closed container. Dispose of in accordance with Federal, State/Provincial, and Local regulations regarding pollution.

SECTION 14 — TRANSPORT INFORMATION

Multi-modal shipping descriptions are provided for informational purposes and do not consider container sizes. The presence of a shipping description for a particular mode of transport (ocean, air, etc.), does not indicate that the product is packaged suitably for that mode of transport. All packaging must be reviewed for suitability prior to shipment, and compliance with the applicable regulations is the sole responsibility of the person offering the product for transport.

US Ground (DOT)

5 Liters (1.3 Gallons) and Less may be Classed as CONSUMER COMMODITY, ORM-D
Larger Containers are Regulated as:
UN1263, PAINT, 3, PG III, (ERG#128)

DOT (Dept of Transportation) Hazardous Substances & Reportable Quantities

Ethyl benzene 1000 lb RQ
Xylenes (isomers and mixture) 100 lb RQ

Bulk Containers may be Shipped as (check reportable quantities):

RQ, UN1263, PAINT, 3, PG III, (XYLENES (ISOMERS AND MIXTURE)),
(ERG#128)

Canada (TDG)

UN1263, PAINT, CLASS 3, PG III, LIMITED QUANTITY, (ERG#128)

IMO

5 Liters (1.3 Gallons) and Less may be Shipped as Limited Quantity.
UN1263, PAINT, CLASS 3, PG III, (27 C c.c.), EmS F-E, S-E, ADR (D/E)

IATA/ICAO

UN1263, PAINT, 3, PG III

SECTION 15 — REGULATORY INFORMATION

SARA 313 *(40 CFR 372.65C)* SUPPLIER NOTIFICATION

CAS No.	CHEMICAL/COMPOUND	% by WT	% Element
100-41-4	Ethylbenzene	2	
1330-20-7	Xylene	12	
	Zinc Compound	6	3.3
	Glycol Ethers	3	

CALIFORNIA PROPOSITION 65

WARNING: This product contains chemicals known to the State of California to cause cancer and birth defects or other reproductive harm.

TSCA CERTIFICATION

All chemicals in this product are listed, or are exempt from listing, on the TSCA Inventory.

SECTION 16 — OTHER INFORMATION

This product has been classified in accordance with the hazard criteria of the Canadian Controlled Products Regulations (CPR) and the MSDS contains all of the information required by the CPR.

The above information pertains to this product as currently formulated, and is based on the information available at this time. Addition of reducers or other additives to this product may substantially alter the composition and hazards of the product. Since conditions of use are outside our control, we make no warranties, express or implied, and assume no liability in connection with any use of this information.

Protective & Marine Coatings

ACROLON™ 218 HS
ACRYLIC POLYURETHANE

PART A	B65-600	GLOSS SERIES
PART A	B65-650	SEMI-GLOSS SERIES
PART B	B65V600	HARDENER

Revised 5/11

PRODUCT INFORMATION

5.22

PRODUCT DESCRIPTION

ACROLON 218 HS is a low VOC, polyester modified, aliphatic, acrylic polyurethane formulated specifically for in-shop applications. Also suitable for industrial applications. A fast drying, urethane that provides color and gloss retention for exterior exposure.

- Can be used directly over organic zinc rich primers (epoxy zinc primer and moisture cure urethane zinc primer)
- Color and gloss retention for exterior exposure
- Fast dry
- Outstanding application properties

PRODUCT CHARACTERISTICS

Finish:	Gloss or Semi-Gloss
Color:	Wide range of colors available
Volume Solids:	65% ± 2%, mixed, may vary by color
Weight Solids:	78% ± 2%, mixed, may vary by color
VOC (EPA Method 24):	Unreduced: <300 g/L; 2.5 lb/gal
mixed	Reduced 10% with R7K15: <340 g/L; 2.8 lb/gal
mixed	Reduced 9% with MEK, R6K10: <340 g/L; 2.8 lb/gal
Mix Ratio:	6:1 by volume, 1 gallon or 5 gallon mixes premeasured components

Recommended Spreading Rate per coat:

	Minimum	Maximum
Wet mils (microns)	**4.5** (112.5)	**9.0** (225)
Dry mils (microns)	**3.0** (75)	**6.0** (150)
~Coverage sq ft/gal (m^2/L)	**175** (4.3)	**346** (8.5)
Theoretical coverage **sq ft/gal** (m^2/L) @ 1 mil / 25 microns dft	**1040** (25.5)	

NOTE: Brush or roll application may require multiple coats to achieve maximum film thickness and uniformity of appearance.

Drying Schedule @ 6.0 mils wet (150 microns):

	@ 35°F/1.7°C	@ 77°F/25°C *50% RH*	@ 120°F/49°C
To touch:	4 hours	30 minutes	20 minutes
To handle:	18 hours	6 hours	4 hours
To recoat:			
minimum:	18 hours	8 hours	6 hours
maximum:	3 months	3 months	3 months
To cure:	14 days	7 days	5 days
Pot Life: (reduced 5% with Reducer R7K15)	4 hours	2 hours	45 minutes
Sweat-in-Time:		None	

If maximum recoat time is exceeded, abrade surface before recoating. Drying time is temperature, humidity, and film thickness dependent.
Paint temperature must be at least 40°F (4.5°C) minimum.

Shelf Life:	Part A - 36 months, unopened Part B - 24 months, unopened Store indoors at 40°F (4.5°C) to 100°F (38°C).
Flash Point:	55°F (13°C), Seta, mixed
Reducer/Clean Up:	
Spray:	Reducer R7K15, MEK R6K10, or R7K111
Brush / Roll:	Reducer #132, R7K132 or R7K111

RECOMMENDED USES

Specifically formulated for in-shop applications.
For use over prepared metal and masonry surfaces in industrial environments such as:

- Structural steel
- Rail cars and locomotives
- Conveyors
- Bridges
- Tank exteriors
- Pipelines
- Ships
- Wind Towers - onshore and offshore
- Offshore platforms - exploration and production
- Suitable for use in USDA inspected facilities
- Conforms to AWWA D102 Outside Coating Systems #4 (OCS-4), #5 (OCS-5) & #6 (OCS-6)
- Acceptable for use in high performance architectural applications

PERFORMANCE CHARACTERISTICS

Substrate*: Steel
Surface Preparation*: SSPC-SP10/NACE 2
System Tested*:
1 ct. Macropoxy 646 @ 6.0 mils (150 microns) dft
1 ct. Acrolon 218 HS Gloss @ 4.0 mils (100 microns) dft
*unless otherwise noted below

Test Name	Test Method	Results
Abrasion Resistance[1]	ASTM D4060, CS17 wheel, 1000 cycles, 1 kg load	43 mg loss
Adhesion	ASTM D4541	975 psi
Corrosion Weathering[2]	ASTM D5894, 9 cycles, 3024 hours	Rating 10 per ASTM D610, for rusting; Rating 10 per ASTM D714, for blistering
Direct Impact Resistance[1]	ASTM D2794	50 in. lb.
Dry Heat Resistance[1]	ASTM D2485, Method A	200°F (93°C)
Flexibility[1]	ASTM D522, 180° bend, 1/8" mandrel	Passes
Humidity Resistance[2]	ASTM D4585, 100°F (38°C), 1500 hours	Rating 10 per ASTM D610, for rusting; Rating 10 per ASTM D714, for blistering
Pencil Hardness	ASTM D3363	3H
Salt Fog Resistance[2]	ASTM B117, 7000 hours	Rating 10 per ASTM D610, for rusting; Rating 9 per ASTM D714, for blistering

Meets the requirements of SSPC Paint No. 36, Level 3.

Complies with ISO 12944-5 C5I and C5M requirements.

Footnotes:
[1] Finish coat only tested
[2] Primer — Zinc-Clad II Plus
Intermediate — Macropoxy 646
Finish — Acrolon 218 HS

continued on back

Protective & Marine Coatings

ACROLON™ 218 HS
ACRYLIC POLYURETHANE

PART A	B65-600	GLOSS SERIES
PART A	B65-650	SEMI-GLOSS SERIES
PART B	B65V600	HARDENER

PRODUCT INFORMATION

5.22

RECOMMENDED SYSTEMS

		Dry Film Thickness / ct. Mils	(Microns)
Steel:			
1 ct.	Macropoxy 646	5.0-10.0	(125-250)
1-2 cts.	Acrolon 218 HS Polyurethane	3.0-6.0	(75-150)
Steel:			
1 ct.	Zinc Clad II Plus	3.0-5.0	(75-125)
1 ct.	Macropoxy 646	5.0-10.0	(125-250)
1-2 cts.	Acrolon 218 HS Polyurethane	3.0-6.0	(75-150)
Steel:			
1 ct.	Zinc Clad IV	3.0-5.0	(75-125)
1-2 cts.	Acrolon 218 HS Polyurethane	3.0-6.0	(75-150)
Steel:			
1 ct.	Corothane I-GalvaPac Zinc Primer	3.0-4.0	(75-100)
1-2 cts.	Acrolon 218 HS Polyurethane	3.0-6.0	(75-150)
Steel:			
1 ct.	Epoxy Mastic Aluminum II	6.0	(150)
1-2 cts.	Acrolon 218 HS Polyurethane	3.0-6.0	(75-150)
Steel:			
1 ct.	Recoatable Epoxy Primer	4.0-6.0	(100-150)
1-2 cts.	Acrolon 218 HS Polyurethane	3.0-6.0	(75-150)
Concrete/Masonry:			
1 ct.	Kem Cati-Coat HS Epoxy Filler/Sealer	10.0-20.0	(250-500)
1-2 cts.	Acrolon 218 HS Polyurethane	3.0-6.0	(75-150)
Aluminum/Galvanizing:			
1 ct.	DTM Wash Primer	0.7-1.3	(18-32)
1-2 cts.	Acrolon 218 HS Polyurethane	3.0-6.0	(75-150)
ISO 12944 C5M System:			
1 ct.	Zinc Clad III HS	3.0-5.0	(75-125)
1 ct.	Tower Guard Epoxy	5.0-11.5	(125-287.5)
1 ct.	Acrolon 218 HS	3.0-6.0	(75-150)

The systems listed above are representative of the product's use, other systems may be appropriate.

DISCLAIMER

The information and recommendations set forth in this Product Data Sheet are based upon tests conducted by or on behalf of The Sherwin-Williams Company. Such information and recommendations set forth herein are subject to change and pertain to the product offered at the time of publication. Consult your Sherwin-Williams representative to obtain the most recent Product Data Information and Application Bulletin.

SURFACE PREPARATION

Surface must be clean, dry, and in sound condition. Remove all oil, dust, grease, dirt, loose rust, and other foreign material to ensure adequate adhesion.

Refer to product Application Bulletin for detailed surface preparation information.

Minimum recommended surface preparation:

* Iron & Steel: SSPC-SP6/NACE 3, 1-2 mil (25-50 micron) profile
* Galvanizing: SSPC-SP1
* Concrete & Masonry: SSPC-SP13/NACE 6, or ICRI No. 310.2, CSP 1-3

* Primer required

Surface Preparation Standards

	Condition of Surface	ISO 8501-1 BS7079:A1	Swedish Std. SIS055900	SSPC	NACE
White Metal		Sa 3	Sa 3	SP 5	1
Near White Metal		Sa 2.5	Sa 2.5	SP 10	2
Commercial Blast		Sa 2	Sa 2	SP 6	3
Brush-Off Blast		Sa 1	Sa 1	SP 7	4
Hand Tool Cleaning	Rusted	C St 2	C St 2	SP 2	-
	Pitted & Rusted	D St 2	D St 2	SP 2	-
Power Tool Cleaning	Rusted	C St 3	C St 3	SP 3	-
	Pitted & Rusted	D St 3	D St 3	SP 3	-

TINTING

Tint Part A with Maxitoner Colorants.

- Extra white tints at 100% tint strength
- Ultradeep base tints at 150% tint strength

Five minutes minimum mixing on a mechanical shaker is required for complete mixing of color.

APPLICATION CONDITIONS

Temperature:	35°F (1.7°C) minimum, 120°F (49°C) maximum (air and surface) 40°F (4.5°C) minimum, 120°F (49°C) maximum (material) At least 5°F (2.8°C) above dew point
Relative humidity:	85% maximum

Refer to product Application Bulletin for detailed application information.

ORDERING INFORMATION

Packaging:	1 gallon (3.78L) mix:	5 gallon (18.9L) mix:
Part A:	.86 gal (3.25L)	4.29 gal (16.2L)
Part B:	.14 gal (0.53L)	0.71 gal (2.7L)
(premeasured components)		

Weight: 11.2 ± 0.2 lb/gal ; 1.3 Kg/L mixed, may vary with color

SAFETY PRECAUTIONS

Refer to the MSDS sheet before use.

Published technical data and instructions are subject to change without notice. Contact your Sherwin-Williams representative for additional technical data and instructions.

WARRANTY

The Sherwin-Williams Company warrants our products to be free of manufacturing defects in accord with applicable Sherwin-Williams quality control procedures. Liability for products proven defective, if any, is limited to replacement of the defective product or the refund of the purchase price paid for the defective product as determined by Sherwin-Williams. NO OTHER WARRANTY OR GUARANTEE OF ANY KIND IS MADE BY SHERWIN-WILLIAMS, EXPRESSED OR IMPLIED, STATUTORY, BY OPERATION OF LAW OR OTHERWISE, INCLUDING MERCHANTABILITY AND FITNESS FOR A PARTICULAR PURPOSE.

Protective & Marine Coatings

ACROLON™ 218 HS
ACRYLIC POLYURETHANE

PART A	B65-600	GLOSS SERIES
PART A	B65-650	SEMI-GLOSS SERIES
PART B	B65V600	HARDENER

Revised 5/11

APPLICATION BULLETIN

5.22

SURFACE PREPARATIONS

Surface must be clean, dry, and in sound condition. Remove all oil, dust, grease, dirt, loose rust, and other foreign material to ensure adequate adhesion.

Iron & Steel
Remove all oil and grease from surface by Solvent Cleaning per SSPC-SP1. Minimum surface preparation is Commercial Blast Cleaning per SSPC-SP6/NACE 3. For better performance, use Near White Metal Blast Cleaning per SSPC-SP10/NACE 2. Blast clean all surfaces using a sharp, angular abrasive for optimum surface profile (1-2 mils / 25-50 microns). Prime any bare steel the same day as it is cleaned or before flash rusting occurs.

Aluminum
Remove all oil, grease, dirt, oxide and other foreign material by Solvent Cleaning per SSPC-SP1. Primer required.

Galvanized Steel
Allow to weather a minimum of six months prior to coating. Solvent Clean per SSPC-SP1. When weathering is not possible, or the surface has been treated with chromates or silicates, first Solvent Clean per SSPC-SP1 and apply a test patch. Allow paint to dry at least one week before testing adhesion. If adhesion is poor, brush blasting per SSPC-SP7 is necessary to remove these treatments. Rusty galvanizing requires a minimum of Hand Tool Cleaning per SSPC-SP2, prime the area the same day as cleaned or before flash rusting occurs. Primer required.

Concrete and Masonry
For surface preparation, refer to SSPC-SP13/NACE 6, or ICRI No. 310.2, CSP 1-3. Surfaces should be thoroughly clean and dry. Concrete and mortar must be cured at least 28 days @ 75°F (24°C). Remove all loose mortar and foreign material. Surface must be free of laitance, concrete dust, dirt, form release agents, moisture curing membranes, loose cement and hardeners. Fill bug holes, air pockets and other voids with Steel-Seam FT910. Primer required.

Follow the standard methods listed below when applicable:
ASTM D4258 Standard Practice for Cleaning Concrete.
ASTM D4259 Standard Practice for Abrading Concrete.
ASTM D4260 Standard Practice for Etching Concrete.
ASTM F1869 Standard Test Method for Measuring Moisture Vapor Emission Rate of Concrete.
SSPC-SP 13/Nace 6 Surface Preparation of Concrete.
ICRI No. 310.2 Concrete Surface Preparation.

Surface Preparation Standards

	Condition of Surface	ISO 8501-1 BS7079:A1	Swedish Std. SIS055900	SSPC	NACE
White Metal		Sa 3	Sa 3	SP 5	1
Near White Metal		Sa 2.5	Sa 2.5	SP 10	2
Commercial Blast		Sa 2	Sa 2	SP 6	3
Brush-Off Blast		Sa 1	Sa 1	SP 7	4
Hand Tool Cleaning	Rusted	C St 2	C St 2	SP 2	-
	Pitted & Rusted	D St 2	D St 2	SP 2	-
Power Tool Cleaning	Rusted	C St 3	C St 3	SP 3	-
	Pitted & Rusted	D St 3	D St 3	SP 3	-

APPLICATION CONDITIONS

Temperature:	35°F (1.7°C) minimum, 120°F (49°C) maximum (air and surface) 40°F (4.5°C) minimum, 120°F (49°C) maximum (material) At least 5°F (2.8°C) above dew point
Relative humidity:	85% maximum

APPLICATION EQUIPMENT

The following is a guide. Changes in pressures and tip sizes may be needed for proper spray characteristics. Always purge spray equipment before use with listed reducer. Any reduction must be compliant with existing VOC regulations and compatible with the existing environmental and application conditions.

Reducer/Clean Up:
Spray.....Reducer R7K15, MEK R6K10, or R7K111
Brush/Roll .....Reducer #132, R7K132, or R7K111
If reducer is used, reduce at time of catalyzation.

Airless Spray
Pressure.....2500 - 2800 psi
Hose.....3/8" ID
Tip .....013" - .017"
Filter.....60 mesh
Reduction.....As needed up to 10% by volume with R7K15 or R7K111, or up to 9% with MEK, R6K10*

Conventional Spray
Gun .....Binks 95
Cap 63P
Atomization Pressure.....50 - 70 psi
Fluid Pressure.....20 - 25 psi
Reduction.....As needed up to 10% by volume with R7K15 or R7K111, or up to 9% with MEK, R6K10*

Brush
Brush.....Natural Bristle
Reduction.....As needed up to 10% by volume*

Roller
Cover .....3/8" woven with solvent resistant core
Reduction.....As needed up to 10% by volume*

If specific application equipment is not listed above, equivalent equipment may be substituted.

* Note: Reducing more than maximum recommended level will result in exceed VOC exceeding 340g/L

continued on back

Protective & Marine Coatings

ACROLON™ 218 HS
ACRYLIC POLYURETHANE

PART A	B65-600	GLOSS SERIES
PART A	B65-650	SEMI-GLOSS SERIES
PART B	B65V600	HARDENER

APPLICATION BULLETIN

5.22

APPLICATION PROCEDURES

Surface preparation must be completed as indicated.

Mix contents of each component thoroughly with low speed power agitation. Make certain no pigment remains on the bottom of the can. Then combine six parts by volume of Part A with one part by volume of Part B (premeasured components). Thoroughly agitate the mixture with power agitation. Re-stir before using.

If reducer is used, add only after both components have been thoroughly mixed.

Apply paint at the recommended film thickness and spreading rate as indicated below:

Recommended Spreading Rate per coat:

	Minimum	Maximum
Wet mils (microns)	**4.5** (112.5)	**9.0** (225)
Dry mils (microns)	**3.0** (75)	**6.0** (150)
~Coverage sq ft/gal (m^2/L)	**175** (4.3)	**346** (8.5)
Theoretical coverage **sq ft/gal** (m^2/L) @ 1 mil / 25 microns dft	**1040** (25.5)	

NOTE: Brush or roll application may require multiple coats to achieve maximum film thickness and uniformity of appearance.

Drying Schedule @ 6.0 mils wet (150 microns):

	@ 35°F/1.7°C	@ 77°F/25°C *50% RH*	@ 120°F/49°C
To touch:	4 hours	30 minutes	20 minutes
To handle:	18 hours	6 hours	4 hours
To recoat:			
minimum:	18 hours	8 hours	6 hours
maximum:	3 months	3 months	3 months
To cure:	14 days	7 days	5 days
Pot Life: (reduced 5% with Reducer R7K15)	4 hours	2 hours	45 minutes
Sweat-in-Time:		None	

If maximum recoat time is exceeded, abrade surface before recoating.
Drying time is temperature, humidity, and film thickness dependent.
Paint temperature must be at least 40°F (4.5°C) minimum.

Application of coating above maximum or below minimum recommended spreading rate may adversely affect coating performance.

CLEAN UP INSTRUCTIONS

Clean spills and spatters immediately with Reducer #132, R7K132. Clean tools immediately after use with Reducer #132, R7K132. Follow manufacturer's safety recommendations when using any solvent.

DISCLAIMER

The information and recommendations set forth in this Product Data Sheet are based upon tests conducted by or on behalf of The Sherwin-Williams Company. Such information and recommendations set forth herein are subject to change and pertain to the product offered at the time of publication. Consult your Sherwin-Williams representative to obtain the most recent Product Data Information and Application Bulletin.

PERFORMANCE TIPS

Stripe coat all crevices, welds, and sharp angles to prevent early failure in these areas.

When using spray application, use a 50% overlap with each pass of the gun to avoid holidays, bare areas, and pinholes. If necessary, cross spray at a right angle.

Spreading rates are calculated on volume solids and do not include an application loss factor due to surface profile, roughness or porosity of the surface, skill and technique of the applicator, method of application, various surface irregularities, material lost during mixing, spillage, overthinning, climatic conditions, and excessive film build.

Excessive reduction of material can affect film build, appearance, and adhesion.

Do not apply the material beyond recommended pot life.

Do not mix previously catalyzed material with new.

In order to avoid blockage of spray equipment, clean equipment before use or before periods of extended downtime with Reducer #15, R7K15 or MEK, R6K10.

Mixed coating is sensitive to water. Use water traps in all air lines. Moisture contact can reduce pot life and affect gloss and color.

Quick-Thane Urethane Accelerator is acceptable for use. See data page 5.97 for details.

E-Z Roll Urethane Defoamer is acceptable for use. See data page 5.99 for details.

Refer to Product Information sheet for additional performance characteristics and properties.

SAFETY PRECAUTIONS

Refer to the MSDS sheet before use.

Published technical data and instructions are subject to change without notice. Contact your Sherwin-Williams representative for additional technical data and instructions.

WARRANTY

The Sherwin-Williams Company warrants our products to be free of manufacturing defects in accord with applicable Sherwin-Williams quality control procedures. Liability for products proven defective, if any, is limited to replacement of the defective product or the refund of the purchase price paid for the defective product as determined by Sherwin-Williams. NO OTHER WARRANTY OR GUARANTEE OF ANY KIND IS MADE BY SHERWIN-WILLIAMS, EXPRESSED OR IMPLIED, STATUTORY, BY OPERATION OF LAW OR OTHERWISE, INCLUDING MERCHANTABILITY AND FITNESS FOR A PARTICULAR PURPOSE.

MATERIAL SAFETY DATA SHEET

B65T654
12 00

DATE OF PREPARATION
May 8, 2011

SECTION 1 — PRODUCT AND COMPANY IDENTIFICATION

PRODUCT NUMBER
B65T654

PRODUCT NAME
ACROLON™ 218 HS Polyurethane - Semi-Gloss (Part A), Ultradeep/Clear Tint Base

MANUFACTURER'S NAME
THE SHERWIN-WILLIAMS COMPANY
101 Prospect Avenue N.W.
Cleveland, OH 44115

Telephone Numbers and Websites

Product Information	www.sherwin-williams.com
Regulatory Information	(216) 566-2902 www.paintdocs.com
Medical Emergency	(216) 566-2917
Transportation Emergency*	(800) 424-9300
**for Chemical Emergency ONLY (spill, leak, fire, exposure, or accident)*	

SECTION 2 — COMPOSITION/INFORMATION ON INGREDIENTS

% by Weight	CAS Number	Ingredient	Units	Vapor Pressure
0.2	**100-41-4**	**Ethylbenzene**		
		ACGIH TLV	100 PPM	7.1 mm
		ACGIH TLV	125 PPM STEL	
		OSHA PEL	100 PPM	
		OSHA PEL	125 PPM STEL	
1	**1330-20-7**	**Xylene**		
		ACGIH TLV	100 PPM	5.9 mm
		ACGIH TLV	150 PPM STEL	
		OSHA PEL	100 PPM	
		OSHA PEL	150 PPM STEL	
1	**64742-94-5**	**Medium Aromatic Hydrocarbons**		
		ACGIH TLV	Not Available	0.12 mm
		OSHA PEL	Not Available	
0.2	**91-20-3**	**Naphthalene**		
		ACGIH TLV	10 PPM	1 mm
		ACGIH TLV	15 PPM STEL	
		OSHA PEL	10 PPM	
		OSHA PEL	15 PPM STEL	
7	**78-93-3**	**Methyl Ethyl Ketone**		
		ACGIH TLV	200 PPM	70 mm
		ACGIH TLV	300 PPM STEL	
		OSHA PEL	200 PPM	
		OSHA PEL	300 PPM STEL	
10	**123-86-4**	**n-Butyl Acetate**		
		ACGIH TLV	150 PPM	10 mm
		ACGIH TLV	200 PPM STEL	
		OSHA PEL	150 PPM	
		OSHA PEL	200 PPM STEL	
7	**108-65-6**	**1-Methoxy-2-Propanol Acetate**		
		ACGIH TLV	Not Available	1.8 mm
		OSHA PEL	Not Available	
21	**14808-60-7**	**Quartz**		
		ACGIH TLV	0.025 mg/m3 as Resp. Dust	
		OSHA PEL	0.1 mg/m3 as Resp. Dust	
5	**112926-00-8**	**Amorphous Precipitated Silica**		
		ACGIH TLV	10 mg/m3 as Dust	
		OSHA PEL	6 mg/m3 as Dust	

SECTION 3 — HAZARDS IDENTIFICATION

HMIS Codes

Health	2*
Flammability	3
Reactivity	0

ROUTES OF EXPOSURE

INHALATION of vapor or spray mist.
EYE or SKIN contact with the product, vapor or spray mist.

EFFECTS OF OVEREXPOSURE

EYES: Irritation.
SKIN: Prolonged or repeated exposure may cause irritation.
INHALATION: Irritation of the upper respiratory system.

May cause nervous system depression. Extreme overexposure may result in unconsciousness and possibly death.
Prolonged overexposure to hazardous ingredients in Section 2 may cause adverse chronic effects to the following organs or systems:

- the liver
- the urinary system
- the hematopoietic (blood-forming) system
- the reproductive system

SIGNS AND SYMPTOMS OF OVEREXPOSURE

Headache, dizziness, nausea, and loss of coordination are indications of excessive exposure to vapors or spray mists.
Redness and itching or burning sensation may indicate eye or excessive skin exposure.

MEDICAL CONDITIONS AGGRAVATED BY EXPOSURE

May cause allergic respiratory and/or skin reaction in susceptible persons or sensitization. This effect may be delayed several hours after exposure.
Persons sensitive to isocyanates will experience increased allergic reaction on repeated exposure.

CANCER INFORMATION

For complete discussion of toxicology data refer to Section 11.

SECTION 4 — FIRST AID MEASURES

EYES: Flush eyes with large amounts of water for 15 minutes. Get medical attention.
SKIN: Wash affected area thoroughly with soap and water.
Remove contaminated clothing and launder before re-use.
INHALATION: If any breathing problems occur during use, **LEAVE THE AREA** and get fresh air. If problems remain or occur later, **IMMEDIATELY** get medical attention.
INGESTION: Do not induce vomiting. Get medical attention immediately.

SECTION 5 — FIRE FIGHTING MEASURES

FLASH POINT	LEL	UEL	FLAMMABILITY CLASSIFICATION
55 °F PMCC	0.8	13.1	RED LABEL -- Flammable, Flash below 100 °F (38 °C)

EXTINGUISHING MEDIA

Carbon Dioxide, Dry Chemical, Foam

UNUSUAL FIRE AND EXPLOSION HAZARDS

Closed containers may explode when exposed to extreme heat.
Application to hot surfaces requires special precautions.
During emergency conditions overexposure to decomposition products may cause a health hazard. Symptoms may not be immediately apparent. Obtain medical attention.

SPECIAL FIRE FIGHTING PROCEDURES

Full protective equipment including self-contained breathing apparatus should be used.
Water spray may be ineffective. If water is used, fog nozzles are preferable. Water may be used to cool closed containers to prevent pressure build-up and possible autoignition or explosion when exposed to extreme heat.

SECTION 6 — ACCIDENTAL RELEASE MEASURES

STEPS TO BE TAKEN IN CASE MATERIAL IS RELEASED OR SPILLED

Remove all sources of ignition. Ventilate the area.
Remove with inert absorbent.

SECTION 7 — HANDLING AND STORAGE

STORAGE CATEGORY

DOL Storage Class IB

PRECAUTIONS TO BE TAKEN IN HANDLING AND STORAGE

Contents are FLAMMABLE. Keep away from heat, sparks, and open flame.
During use and until all vapors are gone: Keep area ventilated - Do not smoke - Extinguish all flames, pilot lights, and heaters - Turn off stoves, electric tools and appliances, and any other sources of ignition.
Consult NFPA Code. Use approved Bonding and Grounding procedures.

Keep container closed when not in use. Transfer only to approved containers with complete and appropriate labeling. Do not take internally. Keep out of the reach of children.

SECTION 8 — EXPOSURE CONTROLS/PERSONAL PROTECTION

PRECAUTIONS TO BE TAKEN IN USE

NO PERSON SHOULD USE THIS PRODUCT, OR BE IN THE AREA WHERE IT IS BEING USED, IF THEY HAVE CHRONIC (LONG-TERM) LUNG OR BREATHING PROBLEMS OR IF THEY EVER HAD A REACTION TO ISOCYANATES.

Use only with adequate ventilation.

Avoid contact with skin and eyes. Avoid breathing vapor and spray mist.

Wash hands after using.

This coating may contain materials classified as nuisance particulates (listed "as Dust" in Section 2) which may be present at hazardous levels only during sanding or abrading of the dried film. If no specific dusts are listed in Section 2, the applicable limits for nuisance dusts are ACGIH TLV 10 mg/m3 (total dust), 3 mg/m3 (respirable fraction), OSHA PEL 15 mg/m3 (total dust), 5 mg/m3 (respirable fraction).

VENTILATION

Local exhaust preferable. General exhaust acceptable if the exposure to materials in Section 2 is maintained below applicable exposure limits. Refer to OSHA Standards 1910.94, 1910.107, 1910.108.

RESPIRATORY PROTECTION

Where overspray is present, a positive pressure air supplied respirator (TC19C NIOSH/MSHA approved) should be worn. If unavailable, a properly fitted organic vapor/particulate respirator approved by NIOSH/MSHA for protection against materials in Section 2 may be effective. Follow respirator manufacturers directions for use. Wear the respirator for the whole time of spraying and until all vapors and mists are gone. **NO PERSONS SHOULD BE ALLOWED IN THE AREA WHERE THIS PRODUCT IS BEING USED UNLESS EQUIPPED WITH THE SAME RESPIRATOR PROTECTION RECOMMENDED FOR THE PAINTERS.**

When sanding or abrading the dried film, wear a dust/mist respirator approved by NIOSH/MSHA for dust which may be generated from this product, underlying paint, or the abrasive.

PROTECTIVE GLOVES

To prevent skin contact, wear gloves which are recommended by glove supplier for protection against materials in Section 2.

EYE PROTECTION

Wear safety spectacles with unperforated sideshields.

OTHER PROTECTIVE EQUIPMENT

Use barrier cream on exposed skin.

OTHER PRECAUTIONS

This product must be mixed with other components before use. Before opening the packages, READ AND FOLLOW WARNING LABELS ON ALL COMPONENTS.

Intentional misuse by deliberately concentrating and inhaling the contents can be harmful or fatal.

SECTION 9 — PHYSICAL AND CHEMICAL PROPERTIES

PRODUCT WEIGHT	10.14 lb/gal	1215 g/l
SPECIFIC GRAVITY	1.22	
BOILING POINT	174 - 415 °F	78 - 212 °C
MELTING POINT	Not Available	
VOLATILE VOLUME	38%	
EVAPORATION RATE	Slower than ether	
VAPOR DENSITY	Heavier than air	
SOLUBILITY IN WATER	N.A.	

VOLATILE ORGANIC COMPOUNDS (VOC Theoretical - As Packaged)

2.77 lb/gal	332 g/l	Less Water and Federally Exempt Solvents
2.77 lb/gal	332 g/l	Emitted VOC

SECTION 10 — STABILITY AND REACTIVITY

STABILITY — Stable

CONDITIONS TO AVOID

None known.

INCOMPATIBILITY

None known.

HAZARDOUS DECOMPOSITION PRODUCTS

By fire: Carbon Dioxide, Carbon Monoxide

HAZARDOUS POLYMERIZATION

Will not occur

SECTION 11 — TOXICOLOGICAL INFORMATION

CHRONIC HEALTH HAZARDS

Methyl Ethyl Ketone may increase the nervous system effects of other solvents.

Reports have associated repeated and prolonged overexposure to solvents with permanent brain and nervous system damage.

Ethylbenzene is classified by IARC as possibly carcinogenic to humans (2B) based on inadequate evidence in humans and sufficient evidence in laboratory animals. Lifetime inhalation exposure of rats and mice to high ethylbenzene concentrations resulted in increases in

certain types of cancer, including kidney tumors in rats and lung and liver tumors in mice. These effects were not observed in animals exposed to lower concentrations. There is no evidence that ethylbenzene causes cancer in humans.

Crystalline Silica (Quartz, Cristobalite) is listed by IARC and NTP. Long term exposure to high levels of silica dust, which can occur only when sanding or abrading the dry film, may cause lung damage (silicosis) and possibly cancer.

TOXICOLOGY DATA

CAS No.	Ingredient Name			
100-41-4	**Ethylbenzene**			
		LC50 RAT	4HR	Not Available
		LD50 RAT		3500 mg/kg
1330-20-7	**Xylene**			
		LC50 RAT	4HR	5000 ppm
		LD50 RAT		4300 mg/kg
64742-94-5	**Medium Aromatic Hydrocarbons**			
		LC50 RAT	4HR	Not Available
		LD50 RAT		Not Available
91-20-3	**Naphthalene**			
		LC50 RAT	4HR	Not Available
		LD50 RAT		Not Available
78-93-3	**Methyl Ethyl Ketone**			
		LC50 RAT	4HR	Not Available
		LD50 RAT		2740 mg/kg
123-86-4	**n-Butyl Acetate**			
		LC50 RAT	4HR	2000 ppm
		LD50 RAT		13100 mg/kg
108-65-6	**1-Methoxy-2-Propanol Acetate**			
		LC50 RAT	4HR	Not Available
		LD50 RAT		8500 mg/kg
14808-60-7	**Quartz**			
		LC50 RAT	4HR	Not Available
		LD50 RAT		Not Available
112926-00-8	**Amorphous Precipitated Silica**			
		LC50 RAT	4HR	Not Available
		LD50 RAT		4999. mg/kg

SECTION 12 — ECOLOGICAL INFORMATION

ECOTOXICOLOGICAL INFORMATION

No data available.

SECTION 13 — DISPOSAL CONSIDERATIONS

WASTE DISPOSAL METHOD

Waste from this product may be hazardous as defined under the Resource Conservation and Recovery Act (RCRA) 40 CFR 261.
Waste must be tested for ignitability to determine the applicable EPA hazardous waste numbers.
Incinerate in approved facility. Do not incinerate closed container. Dispose of in accordance with Federal, State/Provincial, and Local regulations regarding pollution.

SECTION 14 — TRANSPORT INFORMATION

Multi-modal shipping descriptions are provided for informational purposes and do not consider container sizes. The presence of a shipping description for a particular mode of transport (ocean, air, etc.), does not indicate that the product is packaged suitably for that mode of transport. All packaging must be reviewed for suitability prior to shipment, and compliance with the applicable regulations is the sole responsibility of the person offering the product for transport.

US Ground (DOT)

5 Liters (1.3 Gallons) and Less may be Classed as CONSUMER COMMODITY, ORM-D
Larger Containers are Regulated as:
UN1263, PAINT, 3, PG II, (ERG#128)

DOT (Dept of Transportation) Hazardous Substances & Reportable Quantities

Xylenes (isomers and mixture) 100 lb RQ

Bulk Containers may be Shipped as (check reportable quantities):

UN1263, PAINT, 3, PG II, (ERG#128)

Canada (TDG)

UN1263, PAINT, CLASS 3, PG II, (ERG#128)

IMO

5 Liters (1.3 Gallons) and Less may be Shipped as Limited Quantity.
UN1263, PAINT, CLASS 3, PG II, (13 C c.c.), EmS F-E, S-E, ADR (D/E)

IATA/ICAO

UN1263, PAINT, 3, PG II

SECTION 15 — REGULATORY INFORMATION

SARA 313 *(40 CFR 372.65C)* SUPPLIER NOTIFICATION

CAS No.	CHEMICAL/COMPOUND	% by WT	% Element
100-41-4	Ethylbenzene	0.1	
1330-20-7	Xylene	1	
91-20-3	Naphthalene	0.1	

CALIFORNIA PROPOSITION 65

WARNING: This product contains chemicals known to the State of California to cause cancer and birth defects or other reproductive harm.

TSCA CERTIFICATION

All chemicals in this product are listed, or are exempt from listing, on the TSCA Inventory.

SECTION 16 — OTHER INFORMATION

This product has been classified in accordance with the hazard criteria of the Canadian Controlled Products Regulations (CPR) and the MSDS contains all of the information required by the CPR.

The above information pertains to this product as currently formulated, and is based on the information available at this time. Addition of reducers or other additives to this product may substantially alter the composition and hazards of the product. Since conditions of use are outside our control, we make no warranties, express or implied, and assume no liability in connection with any use of this information.

TRANSMITTAL DOCUMENT

Date:	**3-29-16**	**From:**	**Ed Butler**
To:	**EA Engineering, Science, and Technology, Inc., 320 Gold Ave. SW, Suite 1300 Albuquerque, NM 87102 Devon Jercinovic**	**Job Name:**	**Kirtland AFB, NM Bulk Fuels Facility**
		Reference:	
		Transmittal Method:	**E-mail**
		Sent By:	**Ed Butler**

Submittal	Dwg. Number	Item Description
2 Rev. 1	14075-001-PI-03-400002	GAC Vessels V-214A and V-214B

Ed Butler
TECHSAS, Inc.
4819 West Bayshore Drive
Bacliff, TX 77518

"I hereby certify that the (equipment) (material) (article) shown and marked in this submittal is that proposed to be incorporated with the Contract, is in compliance with the contract drawings and specification, can be installed in the allocated spaces, and is submitted for Contractor approval.

Certified by _____.
(Signature when applicable) Date: _____.

Review Comments and Responses:

1. Pressure drop for TIGG system is only 1.7 psi. What is cause of higher pressure drop and will additional pressure drop be an issue?

    a. The activated carbon that has been pH adjusted has a smaller effective size. This will cause the pressure drop to increase by itself, but it also requires that the septa in the cone bottom be smaller slot size so that the new smaller carbon doesn't leak out. This also increases pressure drop.

    b. The treated water pumps are rated at 180' TH. The existing pumps are operating at a pressure of 65' TH. The additional pressure drop will not adversely affect the operation of the discharge pumps.

2. Spec. requires cast iron for pipelines. We should require the same on equipment.

    a. Originally submitted relief valves have been replaced with cast iron valves.

3. Submittal does not specify disc material. Spec. requires nylon coated discs for pipelines.

    a. Originally submitted butterfly valves have been replaced with valves that have nylon coated discs.

4. Exterior color is "slate gray or specified on project drawings". The color should be white to match other pipe.

    a. Please specify a manufacturer and color number. The color will be matched.

Kirtland Air Force Base
Albuquerque, New Mexico

Project: Bulk Fuels Facility

GAC Vessels (Submittal 2 Rev. 1)

Owner:	**Kirtland Air Force Base** **US Army Corps of Engineers**
Owner's Agent:	**EA Engineering, Science, and Technology, Inc.,** **320 Gold Ave. SW, Suite 1300** **Albuquerque, NM 87102**
Engineer:	**EA Engineering, Science, and Technology, Inc.,** **320 Gold Ave. SW, Suite 1300** **Albuquerque, NM 87102**
General Contractor:	**TECHSAS, Inc.** **4819 West Bayshore Drive** **Bacliff, TX 77518**
Construction Management:	**USA Environment, LP** **316 Georgia Ave** **Deer Park, TX 77536**

TABLE OF CONTENTS

Description:

Calgon Submittal Manual

SUBMITTAL MANUAL

(1) MODEL 10
GRANULAR ACTIVATED CARBON ADSORPTION SYSTEM

FOR

KIRTLAND AFB
ALBUQUERQUE, NM

SOLD TO: TECHSAS, INC.
BACLIFF, TX

PREPARED BY
CALGON CARBON CORPORATION
MOON TOWNSHIP, PA

CALGON CARBON PROJECT NUMBER: **CTO.150010.KRTAF**
CUSTOMER PURCHASE ORDER NUMBER: **560245**
DATE: JANUARY, 2016
REVISION 1

THIS MANUAL IS THE PROPERTY OF CALGON CARBON CORPORATION AND IS NOT TO BE REPRODUCED IN WHOLE OR PART, NOR EMPLOYED FOR ANY PURPOSE OTHER THAN SPECIFICALLY PERMITTED IN WRITING BY CALGON CARBON CORPORATION.

SAFETY DEPENDS ON YOU

Calgon Carbon Corporation's equipment is designed and built with safety in mind. However, proper installation and operation can increase your overall safety.

DO NOT INSTALL, OPERATE OR REPAIR THIS EQUIPMENT WITHOUT READING THIS MANUAL AND THE SAFETY PRECAUTIONS CONTAINED THROUGHOUT.

BE SURE THAT ALL INSTALLATION, OPERATION, MAINTENANCE AND REPAIR PROCEDURES ARE PERFORMED ONLY BY QUALIFIED INDIVIDUALS.

SAFETY HIGHLIGHTS

READ AND UNDERSTAND THE FOLLOWING SAFETY HIGHLIGHTS.

⚠ WARNING

This statement appears where the information must be followed exactly to avoid serious personal injury or loss of life

⚠ CAUTION

This statement appears where the information must be followed exactly to avoid minor personal injury or damage to equipment.

QUESTIONS, TROUBLESHOOTING, SPARE PARTS

Call Calgon Carbon Corporation at 1-800-422-7266

CALGON CARBON CORPORATION ♦ COPYRIGHT 2016 ♦ ALL RIGHTS RESERVED

TABLE OF CONTENTS

CARBON ..... SECTION 1

SPECIFICATIONS / CATALOG CUTSHEETS ..... SECTION 2

LINING ..... SECTION 3

PAINT SPECIFICATIONS ..... SECTION 4

DRAWINGS ..... SECTION 5

CALGON CARBON CORPORATION ♦ COPYRIGHT 2016 ♦ ALL RIGHTS RESERVED

SECTION 1

CARBON

OLC AW 12x40

Coconut Acid Washed Granular Activated Carbon

Applications

Liquid Chemical

Water Processing

Point-of-Entry/ Point-of-Use

Bottle & Brewing

Remediation Water Treatment

Industrial Wastewater

Pond/Aquarium/ Swim

OLC AW 12x40 coconut activated carbon can be used in a variety of water, wastewater and process liquid applications for the removal of dissolved organic compounds. OLC AW 12x40 has been used in applications such as process water purification, wastewater treatment and industrial chemical purification.

Description

OLC AW 12x40 is an acid washed coconut activated carbon for the removal of dissolved organic contaminants from water, wastewater and process liquids. These contaminants include taste and odor compounds, organic color, total organic carbon (TOC) and industrial chemicals such as chlorinated solvents (TCE, PCE). The pore structure enables it to be used for adsorption of both high and low molecule weight impurities from waters and liquids. The carbon is especially effective for adsorbing trace organic compounds such as vinyl chloride, methylene chloride, MTBE and THM's/disinfection by-products. OLC AW 12x40 is certified to NSF/ANSI 61 standard and complies with the requirements for activated carbon as defined by the Food Chemicals Codex (FCC) (8th Edition) published by the U.S. Pharmacopeia.

Features / Benefits

- Coconut carbon
- Low ash
- High hardness relative to other raw materials
- Acid washed to prevent ash leaching in acidic solutions
- A strongly adsorbing pore structure optimal for the treatment of chlorine and other organics
- Hardness and abrasion resistance required for thermal reactivation and minimizing generation of fines in operations requiring backwashing
- Pore structure provides a wide range of contaminant removal capabilities

Specifications	OLC AW 12x40
Iodine Number, mg/g	1050 min
Ash, wt%	3 max
Moisture (As packaged), wt%	5 max
Acid Soluble Ash, wt%	1.0 max
pH (Extractable) (ASTM)	6 min / 8 max
Hardness Number	97 min
Water Solubles, wt%	1 max
12 US Mesh [1.70 mm], wt%	5 max
< 40 US Mesh [0.425 mm] (PAN), wt%	5 max

Safety Message

Wet activated carbon can deplete oxygen from air in enclosed spaces. If use in an enclosed space is required, procedures for work in an oxygen deficient environment should be followed.

1.800.4CARBON calgoncarbon.com

© Copyright 2015 Calgon Carbon Corporation, All Rights Reserved

Typical Pressure Drop (OLC AW 12x40)

Based on a backwashed and segregated bed

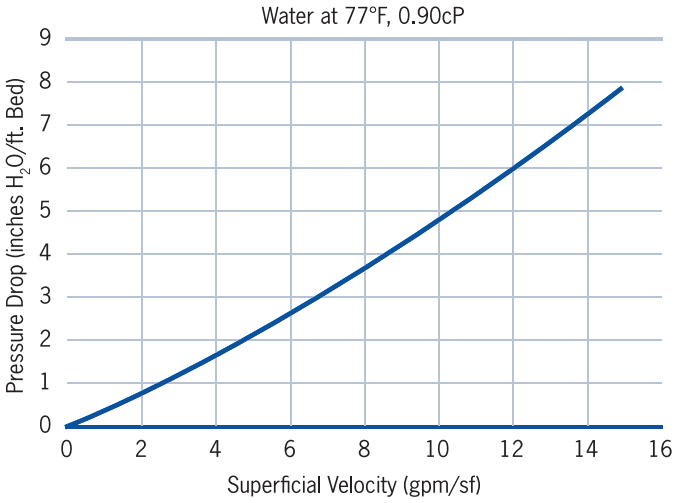

Typical Bed Expansion During Backwash

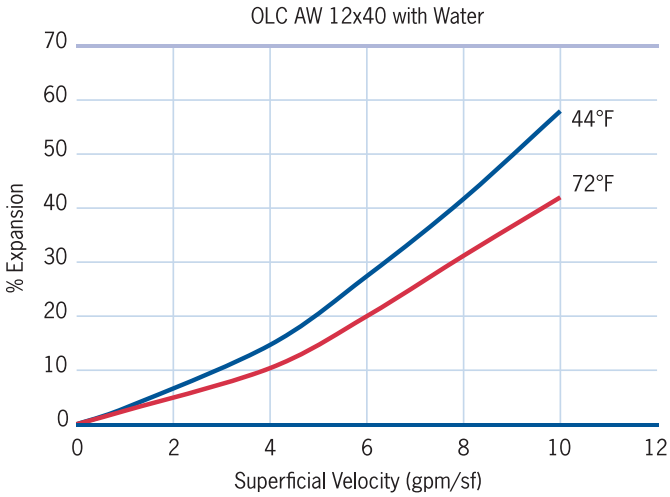

Design Considerations

OLC AW 12x40 coconut activated carbon is typically applied in down-flow packed-bed operations using both pressure and gravity systems. Design considerations for a carbon system is based on the user's operating conditions, the treatment objectives desired, and the chemical nature of the compound(s) being adsorbed. In general, downflow superficial velocity can be from 1 gpm/ft2 to 10 gpm/ft2, depending on the application and contact times can vary from 7.5 minutes to hours. Design may vary based on the type of liquid, contaminants to remove, and desired treatment objectives.

Safety Message

Wet activated carbon can deplete oxygen from air in enclosed spaces. If use in an enclosed space is required, procedures for work in an oxygen deficient environment should be followed.

© Copyright 2015 Calgon Carbon Corporation, All Rights Reserved

OLC AW 12X40
Safety Data Sheet

Issued: 04/20/2015
Supersedes: 12/30/2011
Version: 1.0

SECTION 1: Identification of the Substance/Mixture and of the Company/Undertaking

1.1. Product identifier

Product name : OLC AW 12X40
Product form : Substance
CAS No : 7440-44-0
Product code : 12146
Synonyms : Activated Carbon

1.2. Relevant identified uses of the substance or mixture and uses advised against

Use of the substance/mixture : Adsorbent

1.3. Details of the supplier of the safety data sheet

Calgon Carbon Corporation
P.O. Box 717
Pittsburgh, PA 15230
412-787-6700

1.4. Emergency telephone number

Emergency number : CHEMTREC (24 HRS): 1-800-424-9300

SECTION 2: Hazards Identification

2.1. Classification of the substance or mixture

GHS-US classification

Combustible Dust H232

Not classified as a simple asphyxiant. Product does not displace oxygen in the ambient atmosphere, but slowly adsorbs oxygen from a confined space when wet. Under conditions of anticipated and recommended use, product does not pose an asphyxiation hazard.

2.2. Label elements

GHS-US labeling

Signal word (GHS-US) : **Warning**

Hazard statements (GHS-US) : H232 - May form combustible dust concentrations in air

2.3. Other hazards

Other hazards not contributing to the classification : Wet activated carbon can deplete oxygen from air in enclosed spaces. If use in an enclosed space is required, procedures for work in an oxygen deficient environment should be followed.

2.4. Unknown acute toxicity (GHS-US)

No data available

SECTION 3: Composition/Information on Ingredients

3.1. Substance

Name	Product identifier	%
Activated Carbon	(CAS No) 7440-44-0	< 100

3.2. Mixture

Not applicable

SECTION 4: First Aid Measures

4.1. Description of first aid measures

First-aid measures general : If exposed or concerned, get medical attention/advice. Show this safety data sheet to the doctor in attendance. Wash contaminated clothing before re-use. Never give anything to an unconscious person.

First-aid measures after inhalation : IF INHALED: Remove to fresh air and keep at rest in a comfortable position for breathing.

First-aid measures after skin contact : IF ON SKIN (or clothing): Remove affected clothing and wash all exposed skin with water for at least 15 minutes.

First-aid measures after eye contact : IF IN EYES: Immediately flush with plenty of water for at least 15 minutes. Remove contact lenses if present and easy to do so. Continue rinsing.

First-aid measures after ingestion : IF SWALLOWED: Rinse mouth thoroughly. Do not induce vomiting without advice from poison control center or medical professional. Get medical attention if you feel unwell.

4.2. Most important symptoms and effects, both acute and delayed

Symptoms/injuries : Not expected to present a significant hazard under anticipated conditions of normal use. However, dust may cause irritation and redness of the eyes, irritation of the skin and respiratory system. The effects of long-term, low-level exposures to this product have not been determined.

4.3. Indication of any immediate medical attention and special treatment needed

No additional information available

SECTION 5: Firefighting Measures

5.1. Extinguishing media

Suitable extinguishing media : Water spray. Carbon dioxide. Dry chemical. Foam. Sand.

Unsuitable extinguishing media : None known.

5.2. Special hazards arising from the substance or mixture

Fire hazard : Dust may be combustible under specific conditions. May be ignited by heat, sparks or flames.

Explosion hazard : Dust may form explosive mixture in air.

Reactivity : No dangerous reactions known under normal conditions of use. Carbon oxides may be emitted upon combustion of material.

5.3. Advice for firefighters

Firefighting instructions : Wear NIOSH-approved self-contained breathing apparatus suitable for the surrounding fire. Use water spray or fog for cooling exposed containers. Evacuate area.

SECTION 6: Accidental Release Measures

6.1. Personal precautions, protective equipment and emergency procedures

General measures : Evacuate area. Keep upwind. Ventilate area. Spill should be handled by trained clean-up crews properly equipped with respiratory equipment and full chemical protective gear (see Section 8).

6.1.1. For non-emergency personnel

No additional information available

6.1.2. For emergency responders

No additional information available

6.2. Environmental precautions

Prevent entry to sewers and public waters. Avoid release to the environment. Product is not soluble, but can cause particulate emission of discharged into waterways. Dike all entrances to sewers and drains to avoid introducing material to waterways. Notify authorities if product enters sewers or public waters.

6.3. Methods and material for containment and cleaning up

For containment : Sweep or shovel spills into appropriate container for disposal. Minimize generation of dust.

Methods for cleaning up : Sweep or shovel spills into appropriate container for disposal. Minimize generation of dust. Dispose of material in compliance with local, state, and federal regulations.

6.4. Reference to other sections

No additional information available

SECTION 7: Handling and Storage

7.1. Precautions for safe handling

Precautions for safe handling : Avoid dust formation. Avoid contact with skin, eyes and clothing. Do not handle until all safety precautions have been read and understood. Wash hands and other exposed areas with mild soap and water before eating, drinking or smoking and when leaving work. Keep away from sources of ignition - No smoking.

7.2. Conditions for safe storage, including any incompatibilities

Storage conditions : Keep container tightly closed in a cool, dry, and well-ventilated place. Keep away from ignition sources.

SECTION 8: Exposure Controls/Personal Protection

8.1. Control parameters

Activated Carbon (7440-44-0)*	
OSHA PEL (TWA) (mg/m³)	≤ 5 (Respirable Fraction) ≤ 15 (Total Dust)

*Exposure limits are for inert or nuissance dust. No specific exposure limits have been established for this activated carbon product by OSHA or ACGIH.

8.2. Exposure controls

Appropriate engineering controls : Provide adequate general and local exhaust ventilation. Use process enclosures, local exhaust ventilation, or other engineering controls to control airborne levels below recommended exposure limits. Use explosion-proof equipment with flammable materials. Ensure adequate ventilation, especially in confined areas. Wet activated carbon can deplete oxygen from air in enclosed spaces. If use in an enclosed space is required, procedures for work in an oxygen deficient environment should be followed.

Personal protective equipment : Gloves. Safety glasses. Insufficient ventilation: wear respiratory protection.

Hand protection : Gloves should be classified under Standard EN 374 or ASTM F1296. Suggested glove materials are: Neoprene, Nitrile/butadiene rubber, Polyethylene, Ethyl vinyl alcohol laminate, PVC or vinyl. Suitable gloves for this specific application can be recommended by the glove supplier.

Eye protection : Use eye protection suitable to the environment. Avoid direct contact with eyes.

Skin and body protection : Wear long sleeves, and chemically impervious PPE/coveralls to minimize bodily exposure.

Respiratory protection : Use NIOSH-approved dust/particulate respirator. Where vapor, mist, or dust exceed PELs or other applicable OELs, use NIOSH-approved respiratory protective equipment.

SECTION 9: Physical and Chemical Properties

9.1. Information on basic physical and chemical properties

Physical state	: Solid
Appearance	: Granular, powder, or pelletized substance
Color	: Black
Odor	: Odorless
Odor threshold	: No data available
pH	: No data available
Relative evaporation rate (butylacetate=1)	: Not applicable
Melting point	: Not applicable
Freezing point	: Not applicable
Boiling point	: Not applicable
Flash point	: No data available
Auto-ignition temperature	: > 220 °C
Decomposition temperature	: No data available
Flammability (solid, gas)	: > 220 °C
Vapor pressure	: Not applicable
Relative vapor density at 20 °C	: Not applicable
Apparent density	: 0.4 - 0.7 g/cc
Solubility	: Insoluble.
Log Pow	: Not applicable
Log Kow	: Not applicable
Viscosity, kinematic	: Not applicable
Viscosity, dynamic	: Not applicable
Explosive properties	: No data available
Oxidising properties	: No data available
Explosive limits	: No data available

9.2. Other information

No additional information available

SECTION 10: Stability and Reactivity

10.1. Reactivity

No dangerous reactions known under normal conditions of use.

10.2. Chemical stability

Stable under use and storage conditions as recommended in section 7.

10.3. Possibility of hazardous reactions

None known.

10.4. Conditions to avoid

Avoid dust formation. Heat. Ignition sources. Exposure to high concentrations of organic compounds may cause bed temperature to rise.

10.5. Incompatible materials

Alkali metals. Strong oxidizing agents.

10.6. Hazardous decomposition products

Carbon monoxide (CO), carbon dioxide (CO_2).

SECTION 11: Toxicological Information

11.1. Information on toxicological effects

Acute toxicity : Not classified

Activated Carbon (7440-44-0)	
LD50 oral rat	> 2000 mg/kg

Skin corrosion/irritation : Not classified

Serious eye damage/irritation : Not classified

Respiratory or skin sensitisation : Not classified

Germ cell mutagenicity : Not classified

Carcinogenicity : Not classified

Silica: Crystalline, quartz (14808-60-7)	
IARC group	1 - Carcinogenic to humans
The International Agency for Research on Cancer (IARC) has classified "silica dust, crystalline, in the form of quartz or cristobalite" as carcinogenic to humans (group 1). However these warnings refer to crystalline silica dusts and do not apply to solid activated carbon containing crystalline silica as a naturally occuring, bound impurity. As such, we have not classified this product as a carcinogen in accordance with the US OSHA Hazard Communication Standard (29 CFR §1910.1200) but recommend that users avoid inhalation of product in a dust form.	

Reproductive toxicity : Not classified

Specific target organ toxicity (single exposure) : Not classified

Specific target organ toxicity (repeated exposure) : Not classified

Aspiration hazard : Not classified

Symptoms/injuries : Not expected to present a significant hazard under anticipated conditions of normal use. However, dust may cause irritation and redness of the eyes, irritation of the skin and respiratory system. The effects of long-term, low-level exposures to this product have not been determined.

SECTION 12: Ecological Information

12.1. Toxicity

No additional information available

12.2. Persistence and degradability

No additional information available

12.3. Bioaccumulative potential

No additional information available

12.4. Mobility in soil

No additional information available

12.5. Other adverse effects

No additional information available

SECTION 13: Disposal Considerations

13.1. Waste treatment methods

Waste treatment and disposal methods : Vacuum or shovel material into a closed container. Dispose in a safe manner in accordance with local/national regulations. Do not allow the product to be released into the environment. Subject to Calgon Carbon technical approval, non-powdered activated carbons may be reactivated to allow recycle and reuse.

Additional information : Activated carbon is an adsorbent media; hazard classification is generally determined by the adsorbate. Consult U.S. EPA guidelines listed in 40 CFR 261.3 for more information on hazardous waste disposal.

SECTION 14: Transport Information

14.1. In accordance with DOT

Not classified as hazardous for domestic land transport

UN-No.(DOT) : None on finished product

DOT NA no. : None on finished product

Proper Shipping Name (DOT) : Not regulated

Department of Transportation (DOT) Hazard Classes : None on finished product

Hazard labels (DOT) : None on finished product

Packing group (DOT) : None on finished product

DOT Quantity Limitations Passenger aircraft/rail (49 CFR 173.27) : None on finished product

14.2. Transport by sea

Not classified as hazardous for water transport

IMO / IMDG

UN/NA Identification Number : None on finished product

UN- Proper Shipping Name : Not regulated

Transport Hazard Class : None on finished product

14.3. Air transport

Not classified as hazardous for air transport

ICAO / IATA

UN/NA No : None on finished product

UN- Proper Shipping Name : Not regulated

Transport Hazard Class : None on finished product

Packing Group : None on finished product

Marine Pollutant : None on finished product

14.4. Additional information

Other information : Under the UN classification for activated carbon, all activated carbons have been identified as a class 4.2 product. However, this product type or an equivalent has been tested according to the *United Nations Transport of Dangerous Goods* test protocol for a "self-heating substance" (*United Nations Transportation of Dangerous Goods, Manual of Tests and Criteria, Part III, Section 33.3.1.6 - Test N.4 - Test Method for Self Heating Substances)* and it has been specifically determined that this product type or an equivalent does not meet the definition of a self-heating substance (class 4.2) or any other hazard class, and therefore should not be listed as a DOT hazardous material.

SECTION 15: Regulatory Information

15.1. US Federal regulations

OLC AW 12X40
All chemical substances in this product are listed in the EPA (Environment Protection Agency) TSCA (Toxic Substances Control Act) Inventory or are exempt

Cobalt (7440-48-4)	
Listed on the United States TSCA (Toxic Substances Control Act) inventory Listed on United States SARA Section 313	
SARA Section 313 - Emission Reporting	0.1 %

15.2. International regulations

No additional information available

15.3. US State regulations

California Proposition 65

WARNING: This product contains, or may contain, trace quantities of a substance(s) known to the state of California to cause cancer, birth defects, or other reproductive harm.

Silica: Crystalline, quartz (14808-60-7)				
U.S. - California - Proposition 65 - Carcinogens List	U.S. - California - Proposition 65 - Developmental Toxicity	U.S. - California - Proposition 65 - Reproductive Toxicity - Female	U.S. - California - Proposition 65 - Reproductive Toxicity - Male	No significance risk level (NSRL)
Yes	No	No	No	NA
Cobalt (7440-48-4)				
U.S. - California - Proposition 65 - Carcinogens List	U.S. - California - Proposition 65 - Developmental Toxicity	U.S. - California - Proposition 65 - Reproductive Toxicity - Female	U.S. - California - Proposition 65 - Reproductive Toxicity - Male	No significance risk level (NSRL)
Yes	No	No	No	NA
Titanium dioxide (13463-67-7)				
U.S. - California - Proposition 65 - Carcinogens List	U.S. - California - Proposition 65 - Developmental Toxicity	U.S. - California - Proposition 65 - Reproductive Toxicity - Female	U.S. - California - Proposition 65 - Reproductive Toxicity - Male	No significance risk level (NSRL)
Yes	No	No	No	NA

Aluminum oxide (1344-28-1)
U.S. - New Jersey - Right to Know Hazardous Substance List U.S. - Massachusetts - Right to Know List U.S. - Pennsylvania - RTK (Right to Know) - Environmental Hazard List
Calcium sulfate (7778-18-9)
U.S. - Massachusetts - Right to Know List U.S. - New Jersey - Right to Know Hazardous Substance List U.S. - Pennsylvania - RTK (Right to Know) List
Silica: Crystalline, quartz (14808-60-7)
U.S. - New Jersey - Right to Know Hazardous Substance List U.S. - Pennsylvania - RTK (Right to Know) List U.S. - Massachusetts - Right to Know List

SECTION 16: Other Information

Indication of changes : Revision 1.0: New SDS Created.

Revision Date : 04/20/2015

Other information : Author: CJS.

For internal use only : PR #1

Prepared according to Federal Register / Vol. 77, No. 58 / Monday, March 26, 2012 / Rules and Regulations

NFPA health hazard : 0 - Exposure under fire conditions would offer no hazard beyond that of ordinary combustible materials.

NFPA fire hazard : 1 - Must be preheated before ignition can occur.

NFPA reactivity : 0 - Normally stable, even under fire exposure conditions, and are not reactive with water.

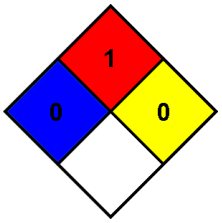

HMIS III Rating

Health : 0

Flammability : 1

Physical	: 0
Personal Protection	:

This information is based on our current knowledge and is intended to describe the product for the purposes of health, safety and environmental requirements only. It should not therefore be construed as guaranteeing any specific property of the product. The information is this document applies to this specific material as supplied. It may not be valid if product is used in combination with other materials. It is the user's responsibility to determine the suitability and completeness of this information for their particular use. While the information and recommendations set forth herein are believed to be accurate as of the date hereof, Calgon Carbon Corporation makes no warranty with respect to the same, and disclaims all liability for reliance thereon.

Pressure Drop Curve
Model 10, 20,000 # OLC 12 x 40 Carbon, 8" Piping
60 deg. F., 80 spec. 22.106 septas

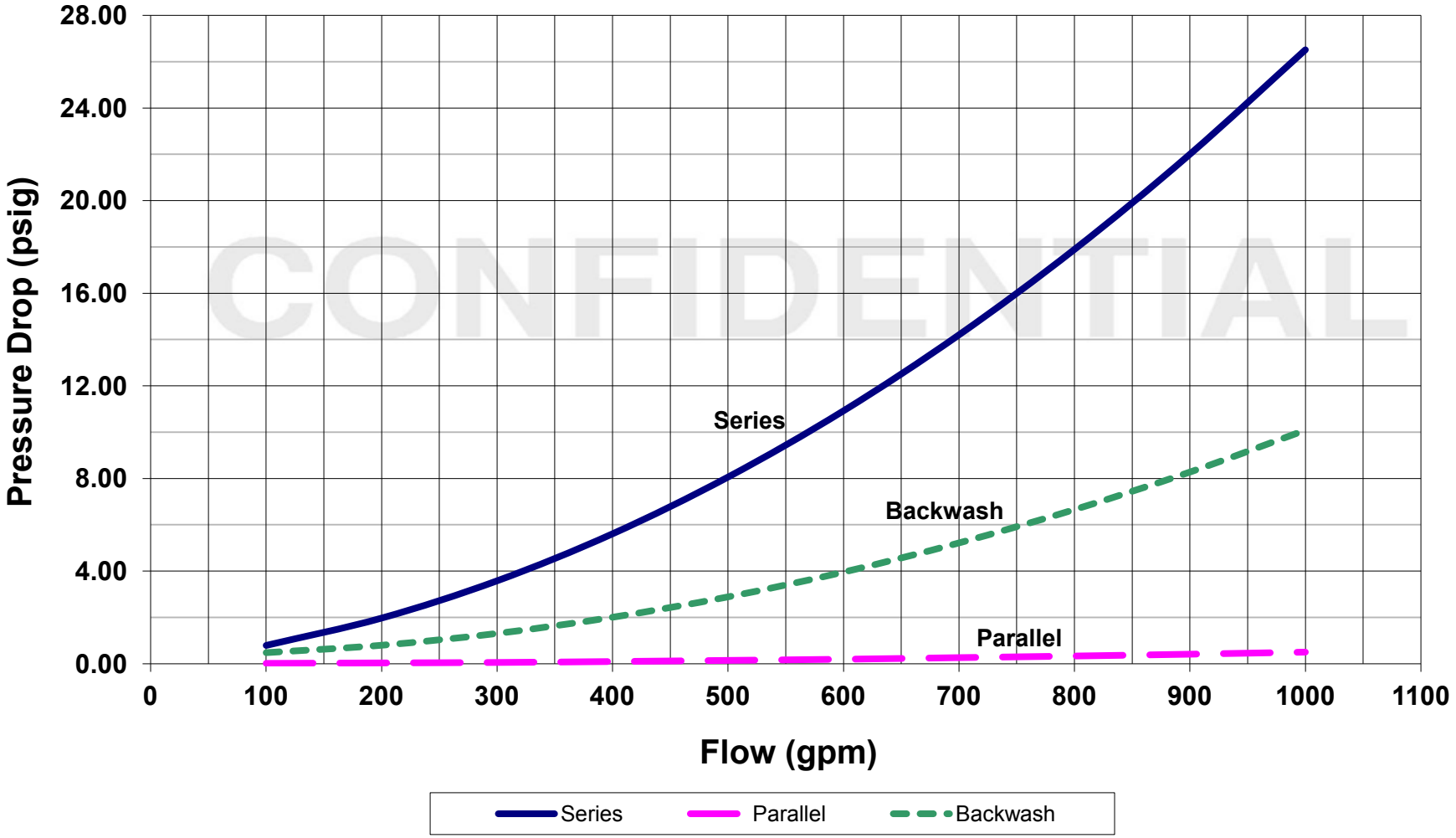

Bed Expansion Curve

Water at 60F, 12 x 40 Mesh Coconut GAC

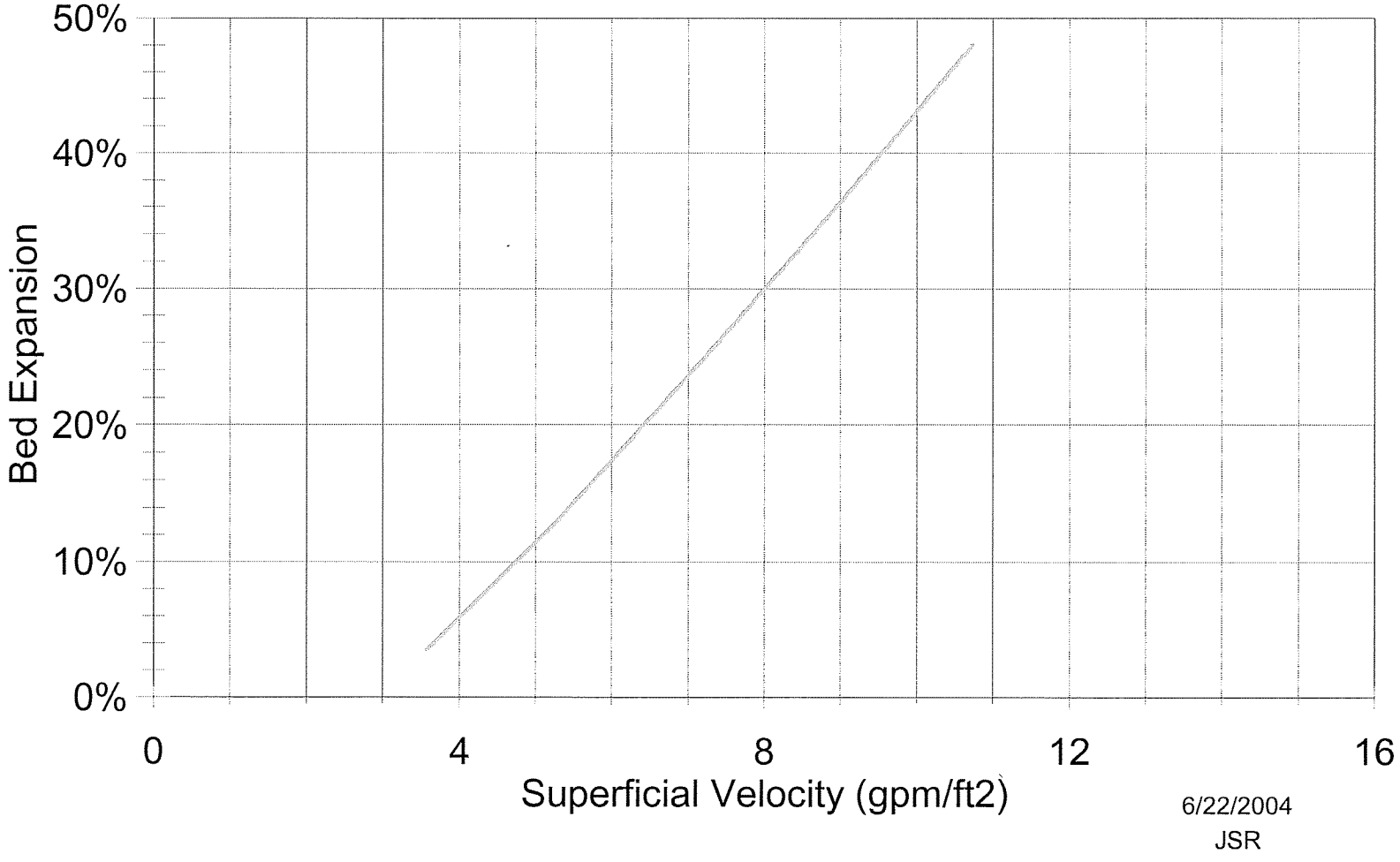

6/22/2004
JSR

SECTION 2

SPECIFICATIONS & CATALOG CUTSHEETS

AL SERIES

Air and Vacuum Valves

Crispin Air and Vacuum Valves

Valve Function

- Allows large quantities of air to be vented from systems being filled with liquid
- Features Vacuum Function

Features

- Meets AWWA C-512
- Peripheral guide system for unobstructed closure
- Drip tight closure
- Standard Buna-N seating material
- Available in sizes 1/2” thru 24”

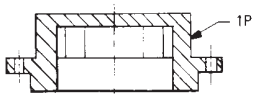

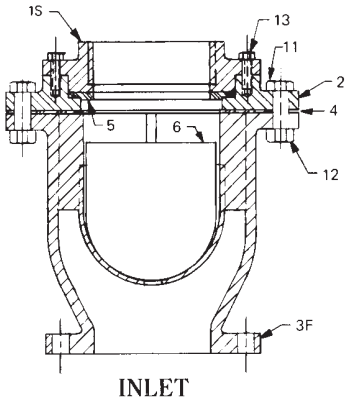

INLET

With Stainless Steel Trim

The Crispin Air and Vacuum Unit, with its orifice the same diameter as its inlet, allows large quantities of air to be vented from systems being filled with liquid. The same holds true in reverse for vacuum conditions when the system is drained.

Its design is such that the velocity of air passing through the valve will not blow the float shut at normal design volumes. It will not close until the arrival of liquid in the valve, and will not open to vent accumulating air as long as the system is under pressure and in operation.

Air and Vacuum Valves are available with stainless steel floats and either standard top or protectop in sizes up to and including 24.” All CRISPIN Air and Vacuum Valves have also guides which direct the float onto the seat upon closure. These guides are peripheral to the float, and fixed to the body or the cup and hanger assembly.

This peripheral guide system allows unobstructed closure because there are no guide bushings to collect dirt and then bind, and there are no shafts to bend or deform, which would prevent a drip tight seal.

Parts List for Air & Vacuum 1” – 24”

PART NO.	ITEM	MATERIAL (standard)
1S*	Top	Cast Iron
1P*	Protectop	Cast Iron
2	Flange	Cast Iron
3	Body, Screwed	Cast Iron
3F*	Body, 125 (1”-4” Threaded) ANSI Flanged	Cast Iron
3FH*	Body, 250 ANSI Flanged	Cast Iron
4	Gasket	Armstrong
5	Seat	Buna-N Rubber
6S	Float	Stainless Steel
11	Bolt	Steel
12	Nut	Steel
13	Bolt	Steel
14* (not shown)	Domed Screened Hood	HRCQ Steel

* Part No.’s 1P, 1S, 3F, 3FH and 14 are at customer’s option
For ease of maintenance, some of the above parts are provided as kits or assemblies.
Note: Prices and Materials are Subject to Change Without Notice

AL Crispin Valve, 600 Fowler Ave., Berwick, PA 18603 • 1-800-AIR-VALV • T: (570) 752-4524 • F: (570) 752-4962 • WWW.CRISPINVALVE.COM • sales@crispinvalve.com

Crispin Air and Vacuum Valves

Air and Vacuum Valve Detail*

MODEL	INLET	OUTLET	TRIM	HEIGHT	WIDTH	WEIGHT (lbs)
A5	1/2" NPT	1/2" NPT	IBBT	4 7/8"	4 3/4"	7
AL10	1" NPT	1" NPT	S/S	6 1/8"	6 1/4"	16
AL20	2" NPT	2" NPT	S/S	9 1/2"	8 3/4"	42
AL21	2" 125# Flg.	2" NPT	S/S	13 1/8"	8 3/4"	48
AL22	2" 250# Flg.	2" NPT	S/S	13 3/8"	8 3/4"	48
AL30	3" NPT	3" NPT	S/S	11 5/8"	11 1/2"	92
AL31	3" 125# Flg.	3" NPT	S/S	15 3/4"	11 1/2"	112
AL32	3" 250# Flg.	3" NPT	S/S	15 15/16"	11 1/2"	120
AL40	4" NPT	4" NPT	S/S	14 1/2"	14"	154
AL41	4" 125# Flg.	4" NPT	S/S	17 5/16"	14"	170
AL42	4" 250# Flg.	4" NPT	S/S	17 13/16"	14"	181
AL61	6" 125# Flg.	6" NPT	S/S	15 13/16"	15"	174
AL62	6" 250# Flg.	6" NPT	S/S	16 1/4"	15"	195
AL81	8" 125# Flg.	8" NPT	S/S	18 1/16"	17 3/4"	265
AL82	8" 250# Flg.	8" NPT	S/S	18 9/16"	17 3/4"	295
AL101	10" 125# Flg.	10" NPT	S/S	22 1/16"	21"	500
AL102	10" 250# Flg.	10" NPT	S/S	22 3/4"	21"	550
ALI21	12" 125# Flg.	12" hooded	S/S	28 1/2"	28"	725
AL122	12" 250# Flg.	12" hooded	S/S	30"	28"	778
AL141	14" 125# Flg.	14" hooded	S/S	31 1/2"	30"	970
AL142	14" 250# Flg.	14" hooded	S/S	32 1/4"	30"	1,157
AL161	16" 125# Flg.	16" hooded	S/S	36 1/2"	32 3/4"	1,025
AL162	16" 250# Flg.	16" hooded	S/S	37 1/2"	32 3/4"	1,115

Crispin valves are hydrostatically tested at 150% of their maximum working pressure.

*Consult factory for sizes above 16".

Submittal Sheet for Crispin AL Series

1”–4” Air & Vacuum Valve

Manufactured in compliance with ANSI/AWWA C512 **Date: October, 2001**

SUBMITTAL SHEET FOR AL SERIES

Specifications

Air & Vacuum Valve(s) shall be installed at high points in the main line or as directed by the engineer to release the air in the main during filling, or allow it to enter the system when draining, or when the system is subject to negative pressure.

The valve(s) shall operate by sealing the Buna-N rubber outlet seat with a peripheral float as the liquid enters the valve chamber to raise the float. All Crispin Valves are hydrostatically tested at 150% of their maxiumum working pressure.

1”-4”—The valve(s) shall be constructed with a cast iron body, and top flange with stainless steel trim, and shall have a_____” NPT screwed inlet and outlet, or ANSI Class (125, 250) flanged inlet with NPT screwed outlet. The peripheral guided float shall be stainless steel.

The valve(s) shall be Crispin Model_____, as manufactured by Crispin-Multiplex Manufacturing Co., Berwick, PA.

Option: A protectop shall be supplied to prevent debris from entering the outlet of the valve.

Option: [Where pressures are greater than 300 PSIG.] the valves shall be ANSI Class_____flanged inlet connection and shall have a (steel, stainless steel, or ductile iron) body, top and inlet flange.

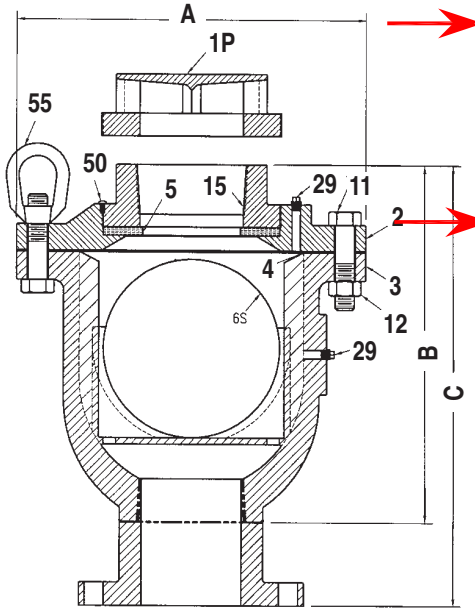

Standard operating pressure for Crispin Air Valves is 20 to 150 PSIG. Please check one of the following if your operating needs differ:

____ 2 to 40 PSIG
____ 151 to 300 PSIG

Size Specifications

MODEL	INLET SIZE	OUTLET SIZE	A	B	C	WEIGHT
*AL10	1” NPT	1” NPT	6.25	6.25		16
AL20	2” NPT	2” NPT	8.75	9.75		44
**AL21	2” 125# FLG	2” NPT	8.75		13.25	50
**AL22	2” 250# FLG	2” NPT	8.75		13.50	52
AL30	3” NPT	3” NPT	11.50	11.75		92
AL31	3” 125# FLG	3” NPT	11.50		15.75	112
AL32	3” 250# FLG	3” NPT	11.50		16.00	120
AL40	4” NPT	4” NPT	14.00	14.50		154
AL41	4” 125# FLG	4” NPT	14.00		17.50	170
AL42	4” 250# FLG	4” NPT	14.00		18.00	181

* Protectop not available ** Includes ANSI CL. 125 or 250 companion FLG & NPL
*** Parts are interchangable and optional at customer’s request

Air & Vacuum Parts List

ITEM	DESCRIPTION	MATERIAL	ASTM
***1S	TOP	CAST IRON	A126 CL. B
**1P	PROTECTOP	CAST IRON	A126 CL. B
2	FLANGE	CAST IRON	A126 CL. B
3F	BODY	CAST IRON	A126 CL. B
4	GASKET	ARMSTRONG N—8092	N/A
5	SEAT	BUNA—N RUBBER	D2000
6S	FLOAT	STAINLESS STEEL	A240
11	BOLT	STEEL	A307
12	NUT	STEEL	A563
29	PLUG	BRASS	B505
50	INTERFERENCE PIN	STAINLESS STEEL	A582
55	EYE BOLT	STEEL	A563

Crispin Valve, 600 Fowler Ave., Berwick, PA 18603 • 1-800-AIR-VALV • T: (570) 752-4524 • F: (570) 752-4962 • WWW.CRISPINVALVE.COM • sales@crispinvalve.com

CalgonCarbon	BUTTERFLY VALVES MATERIAL SPECIFICATION	SPEC NO:
	ONE-PIECE CAST IRON BUTTERFLY VALVE	3.44

SAP PART NUMBER:

CCC DRAWING NUMBER:

MATERIAL: One-piece cast iron wafer style body, epdm or buna-n seat material, gasket type seal, torque plug connection, 416 stainless steel stem (or of greater corrosion resistance), bronze or aluminum bronze disc material, bronze upper and lower bushings. Lever operator for valve sizes 2" through 6", weatherproof worm gear wheel operator for sizes 8" through 12" (handwheel diameter shall not exceed 9"). Valves shall comply with section 5: Inspection Testing and Rejection of AWWA specification C-504-87 with one exception; test pressure shall be 200 psig.

RATING: 200 psig @ 180 Deg. F.

CONSTRUCTION: Shaft: 1 piece, through shaft construction.

MANUFACTURER: Centerline, Pratt, Xomox, Crane, Apollo, Sure-Seal, Flow Line or equal.

SIZES: 2" through 12"

MODELS: Centerline Series 200, Pratt Series 396, Xomox Series 700, Crane Series 42, Apollo Series 141, Sure-Seal Series 600, Flow Line Series 70 or equal.

Issue Date: 10/29/92 Revision Date: 08/13/2009

Approved by Joseph P. McMahon on 08/13/2009

Flow Line 70/71

Wafer & Lug Style
Sizes 2" - 12"

Flow Line™
Valve and Controls

Cartridge Seated Butterfly Valves

KEY FEATURES

Body

- One piece ribbed wafer and lugged body is Polyester coated as standard for a superior appearance and excellent resistance to external corrosion.
- Heavy duty ISO 5211 Top plate is slotted for ease of actuation and engineered to accept direct mounting of operators.
- Standard extended neck provides full clearance for 2” of insulation.

Disc

- Streamlined design offers higher Cv and lower pressure drop.

Shaft

- Triple shaft seals support the primary seal on machined radius of the disc. Our triple shaft seals ensure a dry stem design.
- Two secondary shaft seals are located inside the seat shaft holes and an environmental shaft seal eliminates contaminants from entering the shaft bore.
- Two self lubricated bronze bearings offer consistent torque valves and eliminate side loading.

Seat and Flange Seals

- Field replaceable, phenolic bonded cartridge seat provides no movement of the elastomer which is a common failure point of many resilient flexible seat designs.
- Torque fluctuation is eliminated by our phenolic bonded elastomer seats.
- Our dual purpose primary flange seal is widened offering additional compression of the elastomer against various flanges resulting in a positive seal.
- This resulting primary flange seal provides a smooth flow conduit for media and prevents build up in crevices created by traditional seat designs.
- Molded secondary flange seals assure no leakage when used with weld neck, slip on, and threaded flanges and eliminates the need for gaskets or O-rings.

Disc/Shaft Connection

- A high strength Double D drive ensures a positive shaft to disc connection.
- Disc floats inside the seat for positive sealing and extended seat life.
- No pins or bolts are exposed to flow.
- Offset shaft retainers mechanically retain the shaft in the body ensuring a blow out proof design.

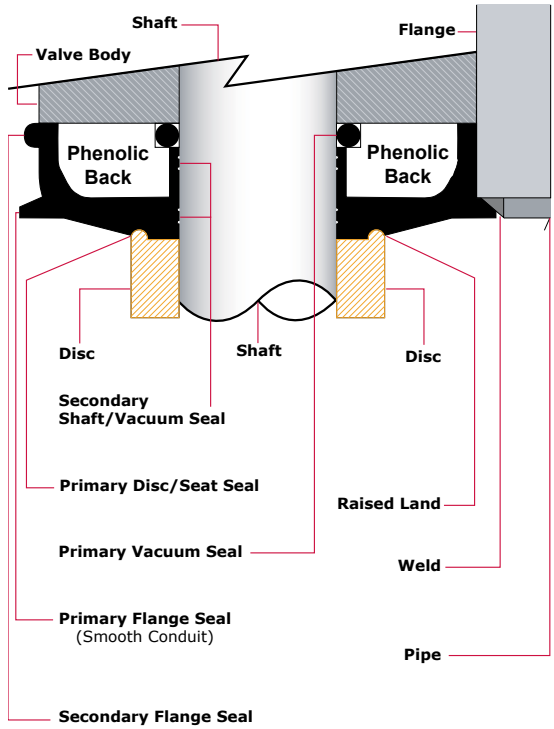

Shaft Sealing Method

- Disc shaft holes surrounded by a 360˚ machined radius are in constant contact with the flatted area of the seat.
- This design is far superior to resilient flexible seat designs that depend on the “squeeze” effect of the disc and seat interference which allows leakage behind the seat and up the shaft.
- The Flow Line shaft seal is achieved through a continuous pressure exerted from the flatted area of the seat to the machined radius of the disc.
- This sealing mechanism is further enhanced by forces exerted on the seat and shaft providing a secondary seal resulting in media free disc, shaft and seat connection.

Applicable Standards

ANSI B16.1	Conforms to ANSI Class 125 flange drilling.
ANSI B16.5	Conforms to ANSI 150 flange drilling.
ANSI B16.42	Conforms to ANSI Class 150 flange drilling, body wall thickness and pressure-temperature ratings.
ANSI B16.104	Exceeds Class VI shutoff requirements.
API 609	Butterfly Valve Category A.
AWWA C504	Diameter of stainless steel shaft exceeds AWWA Class 75B standard. Body wall thickness exceeds the AWWA Class 150B standard for butterfly valves.
MSS SP-25	Markings and identification conform to the requirements.
MSS SP-67	Butterfly Valves
ISO 5211	Actuator Mounting
USCG	Category “A” Title 46, CFR, Part 56

ENGINEERING

DIMENSIONS

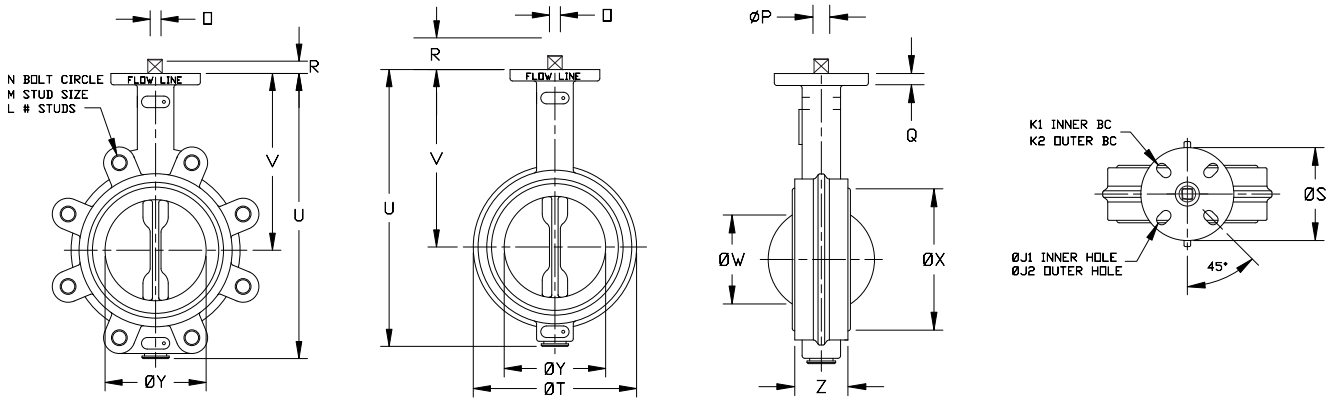

Valve Size	Z	Y	X	W	V	U	T	S	R	Q	P	O	Lug Drilling			Top Plate Drilling					Weight
													N	M	L	K1	K2	#holes	J1	J2	(lb)
2	1.74	2.25	2.65	1.46	5.62	8.44	4.12	4.00	0.827	.44	.551	0.551	4.75	5/8-11	4	2.76	3.25	4	.39	.41	8
2-1/2	1.86	2.81	3.15	2.14	6.12	9.19	4.88	4.00	0.827	.44	.551	0.551	5.50	5/8-11	4	2.76	3.25	4	.39	.41	10
3	1.86	3.31	3.78	2.74	6.38	9.69	5.38	4.00	0.827	.44	.551	0.551	6.00	5/8-11	4	2.76	3.25	4	.39	.41	11
4	2.11	4.19	4.78	3.60	7.12	11.00	6.88	4.00	0.827	.44	.551	0.551	7.50	5/8-11	8	2.76	3.25	4	.39	.41	17
5	2.24	5.06	5.84	4.58	7.75	12.12	7.75	4.00	1.063	.44	.670	.670	8.50	3/4-10	8	2.76	3.25	4	.39	.41	23
6	2.24	6.06	7.03	5.62	8.25	13.25	8.75	4.00	1.063	.44	.670	.670	9.50	3/4-10	8	2.76	3.25	4	.39	.41	29
8	2.54	7.94	8.96	7.43	9.44	15.56	11.00	6.00	1.063	.56	.866	0.866	11.75	3/4-10	8	4.02	5.00	4	.53	.53	44
10	2.74	10.00	11.09	9.38	11.25	18.69	13.38	6.00	1.063	.56	.866	0.866	14.25	7/8-9	12	4.02	5.00	4	.53	.53	66
12	3.24	11.94	13.09	11.35	12.19	21.69	16.12	6.00	1.063	.56	.866	0.866	17.00	7/8-9	12	4.02	5.00	4	.53	.53	99

CLASS II TORQUES (Inch-Pounds)

Shutoff Pressure	2"	2 1/2"	3"	4"	5"	6"	8"	10"	12"
50 PSI SHUTOFF	66	96	150	225	350	450	750	1325	2250
75 PSI SHUTOFF	98	141	237	261	504	651	1050	1778	2990
100 PSI SHUTOFF	103	148	249	343	531	685	1105	1872	3147
125 PSI SHUTOFF	107	155	260	376	553	714	1151	1950	3279
150 PSI SHUTOFF	110	158	265	384	564	728	1275	1989	3345
175 PSI SHUTOFF	121	175	283	417	632	814	1337	2320	3923
200 PSI SHUTOFF	132	192	300	450	700	900	1500	2650	4500
250 PSI SHUTOFF	145	211	318	486	770	990	1695	2995	5085
285 PSI SHUTOFF	160	232	337	528	847	1089	1915	3384	5746

Cv VALUES

Valve Size	10°	20°	30°	40°	50°	60°	70°	80°	90°
2	2	3.5	8	21	40	87	108	141	170
2-1/2	3	5	11	27	52	121	172	253	332
3	8	16	23	50	92	147	224	420	473
4	17	33	57	110	182	297	462	773	913
5	47	94	143	231	380	578	908	1485	1650
6	91	182	248	396	627	902	1386	2063	2178
8	116	231	330	528	858	1452	2508	4158	4257
10	223	446	633	935	1320	2090	3630	6710	7095
12	303	605	825	1320	2063	3135	5528	10230	10780

Class II

- Valve to be operated a minimum of once a month.
- Temperature well within resilient seat limits.
- Line media is a self lubricating. (Aqueous liquids)
- Minor chemical attacks on seat.
- Disc corrosion and media deposits to be mild.

Notes:
1. This chart to be used as a guide only.
2. These torque ratings do not apply to every possible service criteria, which may affect seating and unseating torque.
3. Torque values are applicable to Flow Line Series 70/71.
4. Do not apply a safety factor to the above torque values when sizing actuators.
5. Dynamic Torque should always be a consideration when sizing valves with high differential pressures.
6. For 3 way tee assemblies multiply the above torques by 1.5.

SPECIFICATIONS

HOW TO ORDER

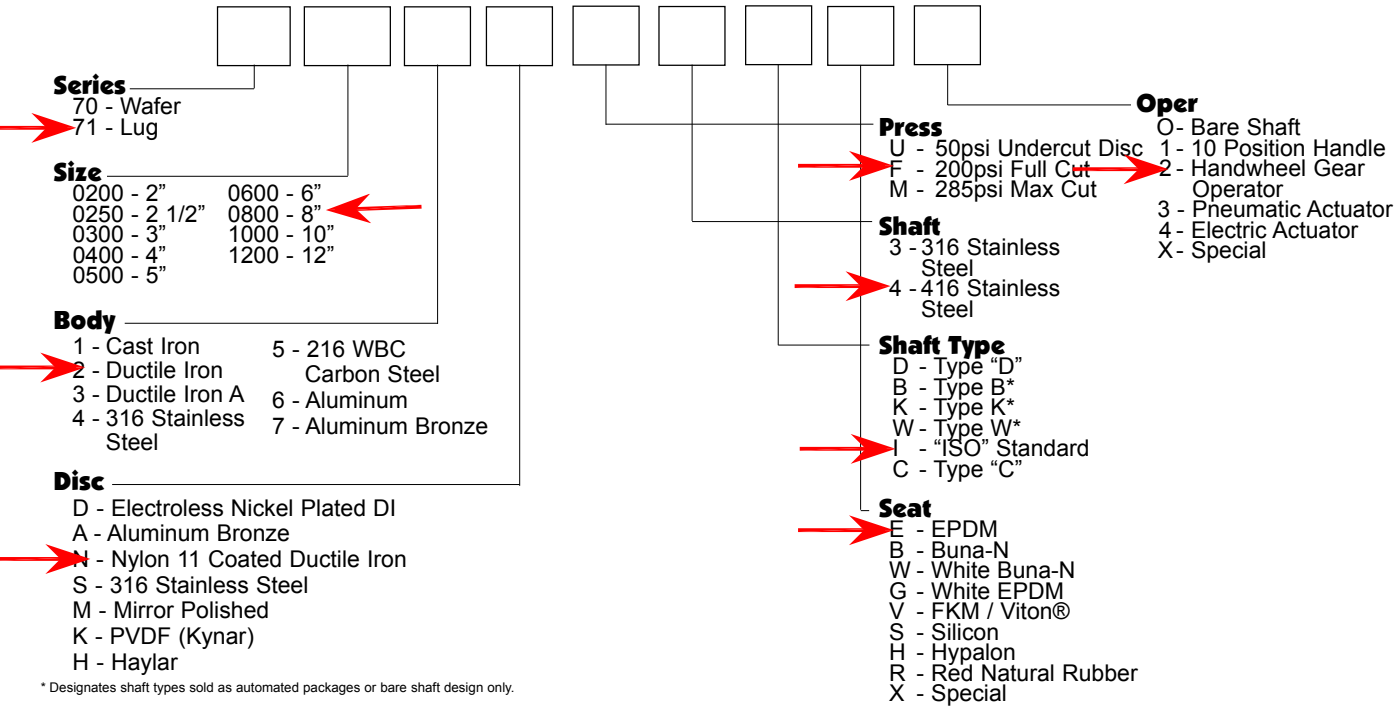

* Designates shaft types sold as automated packages or bare shaft design only.

Recommended Specifications

- Polyester coated ribbed wafer or lug bodies to provide extended necks for insulation and be able to install between ANSI 125/150 flanges. Lug design in sizes 2” - 12” to be fully rated for dead end service without any modification.
- Streamlined disc design with no pins or screws in the flow path and designed for high Cv and lower pressure drop.
- Upper and lower shaft design to utilize triple shaft seals as standard.
- Blow out proof design utilizing a Double D drive for a positive disc/shaft connection.
- Pressure responsive 360° sealing design will use constant pressure between machined radius on disc and flatted area of the seat.
- Valve to be Flow Line Series 70 wafer or Flow Line Series 71 lug design.

Components

Qty	Description	Qty	Description
1	Body	2	Shaft Retainers
1	Disc	1	Bearing Retainer
1	Upper Shaft	1	Environmental Shaft Seal
1	Lower Shaft	2	Secondary Shaft Seals
1	Seat	1	Thrust Bearing
		1	Inboard Bearing

Materials of Construction 2” - 12”

Body

- Cast Steel ASTM A-216 WCB
- 316 Stainless Steel ASTM A-351 CF8M
- Cast Iron ASTM A-126 Class B
- Ductile Iron ASTM A-536 (65-45-12)
- Ductile Iron ASTM A-395 (60-40-18)

Disc

- Electroless Nickel Plated Ductile Iron ASTM A-536 (65-45-12)
- Aluminum Bronze ASTM B-148 (954)
- Nylon 11 Coated Ductile Iron ASTM A-536 Grade (65-45-12)
- 316 Stainless Steel ASTM A-351 (CF8M)

Stem

- 316 Stainless Steel ASTM A-276 Type 316
- 416 Stainless Steel ASTM A-582 Type 416

Seat

EPDM - FDA Food Grade	-30 to + 275
Buna-N - FDA Food Grade	0 to +180
White Buna-N - FDA Food Grade	0 to + 180
Viton® - FDA Food Grade	0 to + 375
Silicon - FDA Food Grade	-80 to + 450
Hypalon	0 to + 180
Red Natural Rubber	0 to + 150

Viton® is a registered trademark of the E.I. DuPont De Nemours Company. FKM is the ASTM D1418 designation for Flourinated Hydrocarbon elastomers such as Viton® (DuPont) and Flourel® (3M).

FEATURES

- **Slotted ISO 5211 top plate and shaft for flexibility of direct mounting options**
- **Environmental shaft seal to keep contaminants from entering shaft bore**
- **Offset shaft retainers mechanically retain the shaft ensuring a blow out proof design**
- **One piece ribbed Polyester coated body with extended neck**
- **Streamlined disc with no pins or screws in flow path**
- **Primary seal provides a smooth flow conduit and prevents media buildup in crevices normally found with traditional designs**
- **Independent seals provide full vacuum rating**

- **High strength upper and lower shafts with triple shaft seals**
- **Two self lubricated bronze bearings to eliminate side loading**
- **Double D Drive for a positive disc/shaft connection with no pins or bolts exposed to flow**
- **Proven pressure responsive 360° sealing method uses constant pressure between machined radius on disc and flatted area of the seat that eliminates the "squeeze" of the interference seat design our competition relies on**
- **Phenolic bonded cartridge seat with primary and secondary seals provide no movement of the elastomer**
- **Two secondary shaft seals located inside the seat shaft holes**

The **Series 70 wafer** style and **Series 71 lug** style are heavy duty cartridge seated butterfly valves compatible ANSI 125/150 weld neck, slip on, and threaded flange standards. 2" - 12" valves are fully rated to 200 psi, bi-directional, dead end service. Valves with undercut discs to 50 psi are also available through the size range. Valves with Max cut Disc to 285 psi are also available through size range. All Series 70/71 valves, regardless of the rated working pressure, are vacuum rated to 29.92" of Mercury Gauge (0 Micron).

COATINGS

Flow Line Series 70 and 71 butterfly valve bodies are Polyester coated as standard. Polyester is a significant upgrade to paint or two part epoxy coatings. Our standard Polyester coating offers outstanding protection against abrasion and corrosion. The Flow Line Polyester coating is not affected by outdoor exposure and maintains excellent resistance to UV rays.

TEST	RESULT
Salty Fog Test	No change in excess of 2000 hours
Outdoor Weathering (UV Rays)	No noticeable change in excess of 12 months
50% Sulfuric Acid Test	No change for 48 hours

INSTALLATION, MAINTENANCE AND ASSEMBLY

Handle Kit

The Flow Line Handle Kit is designed for manual on/off and throttling service for quarter turn, resilient seated butterfly valves ranging from 2" - 12". The Polyester coated ductile iron handle kit includes the handle assembly with a locking lever and bolt on plate notched at 10 degree increments. The notched plate also includes on/off stops to prevent over travel of the handle and can be used with a padlock as standard. Other available options include an Infinite Throttling Handle Kit, Memory Stop and a 2" Square Nut.

Handwheel Gear Operator

The Flow Line Handwheel Gear Operator is designed for manual on/off and throttling service for quarter turn butterfly valves ranging from 2" - 12". The handwheel gear operator is constructed with a heavy duty, Polyester coated ductile iron housing, is completely self lubricated and weatherproof. Along with the gear operator, it also includes a valve position indicator, ductile iron handwheel and mechanical travel stops for field adjustment. Other available options include a Chainwheel Kit, Padlock Kit and a 2" Square Nut.

Actuation

Series 21 spring return actuators are available throughout the size range.

Series 50 solenoid valves are available in 1/8", 1/4", and 1/2"NPT.

Series 52 and 53 limit switches provide local and remote valve position.

Series 55 and 56 positioners are available with either a 3-15 psi or 4-20 MADC signal.

Installation

To install, simply close the valve, position between the flanges and assemble the valve to the flanges with studs or cap screws. Do not use flange gaskets. Flow Line Series 70 and 71 butterfly valves can be installed with the disc closed. Before hand tightening the flange bolts, fully open the disc to ensure disc O.D. clearance with pipe I.D. Hand tighten the flange bolts and close the valve to check for valve disc and pipe clearance. If contact is made, reposition as necessary and tighten all flange bolts to proper torque specification.

Maintenance and Repair

No regular maintenance or lubrication is required. Factory assembly procedures provide adequate lubrication for the life of the valve. To replace any component, remove valve from the line by fully closing valve disc. Spread flanges, remove all bolts then remove valve from line.

Testing

All Flow Line Series 70 and 71 butterfly valves are bi-directionally tested to 130 percent of rated working pressure. Test certification is available upon request at time of order.

Flanges

ANSI 125/150 cast iron, steel, raised face, flat faced weld neck, slip on and threaded flanges are suitable for use with Flow Line butterfly valves. Please contact the factory for proposed installation with plastic flanges.

Warranty

All products manufactured by Flow Line Valve and Controls are warranted against defects in material and workmanship for a period of 2 years from date of installation.

All statements, technical information and recommendations in the bulletin are for general use only. Flow Line Valve and Controls is not responsible for suitability or compatibility of these products in relation to system requirements. Consult Flow Line Valve and Controls distributors or factory for the specific requirements and material selection for your intended application. Flow Line Valve and Controls reserves the right to change or modify product design or product without prior notice. Flow Line Valve and Controls is not responsible for editorial or pictorial errors within this literature.

Flow Line Valve and Controls

110 Main Project Rd. Schriever, LA 70395
Phone (985) 414-6004 Fax (985) 414-6072
Toll 800-815-9226
www.flowlinevalves.com

Doc. No. FLBV1
© Flow Line

	BALL VALVES MATERIAL SPECIFICATION	SPEC NO:
CalgonCarbon	FORGED BRONZE, BRASS, OR BARSTOCK BRASS BODY REGULAR PORT BALL VALVE	4.03

SAP PART NUMBER:

CCC DRAWING NUMBER:

MATERIAL: Bronze or forged brass or barstock brass body regular port ball valve, blow-out proof stem, ball and seat retainer design to permit valve to be dead ended in either flow direction, chrome plated bronze or brass ball and stem, PTFE seats and seals (furnish glass fiber reinforced PTFE seats and graphited stem seal if required to meet pressure and temperature rating), wrench handle operated, threaded ends.

RATING: 500 PSIG @ 100 DEG. F.
150 PSIG @ 366 DEG. F.

MANUFACTURER: DuraValve / Siral or Equal.

SIZES: 1/4" thru 2"

MODELS: VRN5000 or Equal

GENERAL REQUIREMENTS:

PROPRIETARY AND CONFIDENTIAL
THIS DOCUMENT AND DESIGN DETAILS ARE THE PROPERTY OF CALGON CARBON CORPORATION AND ARE NOT TO BE REPRODUCED IN WHOLE OR PART, NOR EMPLOYED FOR ANY PURPOSE OTHER THAN SPECIFICALLY PERMITTED IN WRITING BY CALGON CARBON CORPORATION. THIS DOCUMENT IS LOANED AND SUBJECT TO RETURN ON DEMAND.

Issue Date: 01/01/89 Revision Date: 08/14/2003

Approved by Gerald Kirner on 02/09/2006

"8901"

¼" - 3"

BRASS BALL VALVE
TWO-PIECE, FULL-PORT
600 WOG / 150 SWP
THREADED ENDS*

MSS-SP110
NSF61-8
ASME A112.4.14

C US
ANSI Z 21.15-1997 Z CGA 9.1-M97
3-88 IAS, CR91-002
ASME 16.44-2002
CAN/CGA-3.16-M88

C UL US
UL 125
UL 842
Subject 258

FM
APPROVED
1140

1/4" through 2" Only

MATERIALS LIST

ITEM	PART	MATERIALS	ASTM SPEC.
1	Body	Brass, Forged	B283
2	Tailpiece	Brass, Forged	B283
3	Ball	Brass w/ Chrome Plating	B283
4	Ball Seal	PTFE	Commercial
5	Stem	Brass	B124
6	O-Ring	Buna-N	D2006
7	Thrust Washer	PTFE	Commercial
8	Gland Nut	Brass	B124
9	Packing	PTFE	Commercial
10	Handle	Zinc Plated Steel	Commercial
11	Handle Nut	Zinc Plated Steel	Commercial

CLASSIFIED UL
ANSI / NSF 61
BALL VALVE
9EA0
WATER QUALITY

*Also Available 8901-07
(Locks only in closed position)

PRESSURE - TEMPERATURE CHART

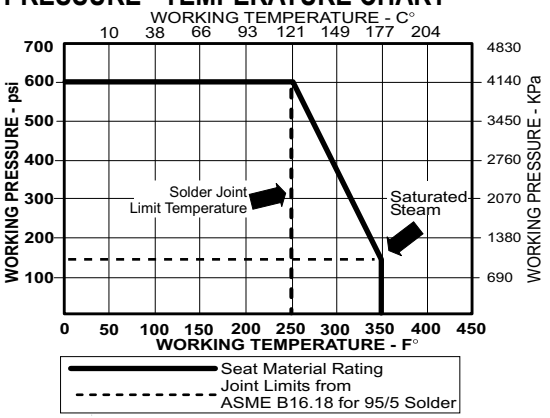

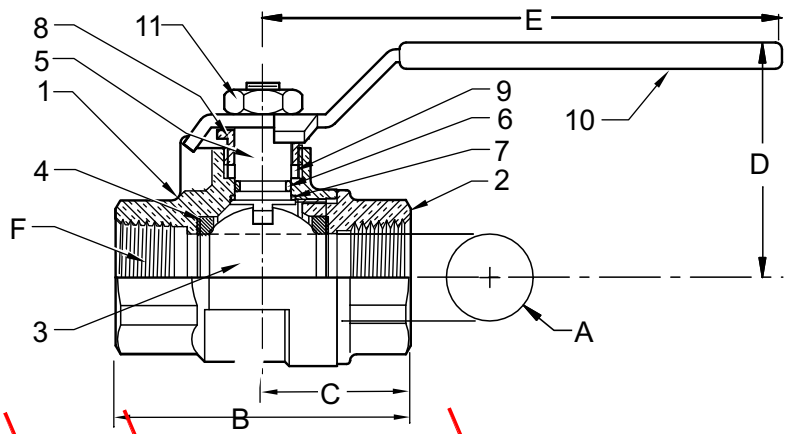

DIMENSIONS

Valve Size	UNITS	1/4"	3/8"	1/2"	3/4"	1"	1-1/4"	1-1/2"	2"	2-1/2"	3"
A	INCHES	.39	.39	.51	.76	1.00	1.26	1.50	2.00	2.48	2.95
	mm	9.9	9.9	12.7	19.3	25.0	32.0	38.1	51.0	63	74.9
B	INCHES	1.87	1.87	2.25	2.62	3.06	3.5	3.75	4.38	5.16	6
	mm	47	47	57	67	78	89	95	111	131.1	152.4
C	INCHES	0.95	0.95	1.12	1.31	1.91	2.21	1.87	2.19	2.58	3
	mm	24	24	61	33	49	56	47	56	65.5	76.2
D	INCHES	1.42	1.42	1.46	1.93	2.10	2.33	2.52	2.96	3.94	4.37
	mm	36	36	37	49	53	59	64	75	100.1	111
E	INCHES	3.14	3.14	3.14	4.35	4.35	5.00	5.00	6.90	7.87	7.87
	mm	80	80	80	110	110	127	127	175	199.9	199.9
F	THREAD SIZE	1/4" NPT	3/8" NPT	1/2" NPT	3/4" NPT	1" NPT	1-14" NPT	1-1/2" NPT	2" NPT	2-1/2" NPT	3" NPT
Cv		12	12	18	40	72	112	161	287	448	645
TORQUE	in-lb	16	16	19	58	69	89	124	210	445	563
	N.m	1.8	1.8	2.1	6.5	7.8	10	14	24		
WEIGHT	lbs	0.33	0.34	0.47	0.89	1.24	1.66	2.34	4.94	7.4	10.47
	Kg	.149	.155	.213	.403	.565	.755	1.064	2.245	3.35	4.75

Rev. 6

The information presented on this sheet is correct at the time of publication. Hammond Valve reserves the right to change design, and/or material specifications without notice. For the Installation, Operation and Maintenance Manual (IOM) see the engineering section on our website. For the most current information access www.hammondvalve.com

HAMMONDVALVE

HAMMONDVALVE

TWO PIECE THREADED END BALL VALVE
INSTALLATION, OPERATION AND MAINTENANCE INSTRUCTIONS

INSTALLATION

1) Thoroughly clean and prepare the piping system before valve installation.
2) Remove the valve end caps if present, and inspect the valve ports and seating surfaces for cleanliness just prior to installation.
3) Support the valve to prevent unnecessary stresses induced by connecting pipe.
4) Be sure the rating of the valve is compatible with the intended service conditions.
5) Operate the valve from the full open to closed position.
6) PTFE thread sealant is recommended when making up connections. Consult the sealant manufacturer's instructions for proper use. Install on pipe and not the valve.
7) Care should be used to not over tighten the valve onto the pipe, as it is possible to distort the internal parts of the valve.
8) Because bronze is a softer metal than steel, always put the pipe in a vise and turn the valve onto the pipe end. Always use a smooth-jawed wrench on the valve end on the same side of the valve to which the pipe or fitting is being installed to prevent distortion of the internal parts of the valve or transmission of torque and stress into the body joint. Pipe Wrenches should be used on pipe and fittings only.
9) Take precaution also to prevent loosening body to tailpiece connection by reverse rotation during installment/alignment. Such loosening could comprise body to tailpiece sealing.
10) Verify the tightness of the packing nut after installation.

OPERATION

1) Ball valves are designed to be opened by rotating the lever handle in a counterclockwise direction, and closing in a clockwise direction. The handle indicates the ball port direction.
2) Under certain conditions, throttling flow in the near-closed position can destroy the valve seats. Consult Factory for throttling service.

INSPECTION & MAINTENANCE

1) Periodic inspection and preventative maintenance is not required other than adjustment of stem packing, and cycling of the valve from open to closed position.
2) If a valve develops a packing leak, adjust the packing nut to increase the pressure on the stem packing. The packing nut should be turned in a clockwise direction approximately 1/4 turn, or until the leakage stops. **It is not recommended that valves be repacked while under pressure. Remove system pressure before starting.**
3) Repair or replacement of two piece ball valves internal parts is not recommended. Damage can occur to the body and tailpiece during disassembly that would make the valve inoperable.

REPAIR PARTS

Under normal conditions, repair parts are not required.

CalgonCarbon	BALL VALVES MATERIAL SPECIFICATION	SPEC NO:
	STAINLESS STEEL AND ENTRY FULL BORE BALL VALVE	4.08

SAP PART NUMBER:

CCC DRAWING NUMBER:

MATERIAL: Stainless steel and entry full bore ball valve 1/2" thru 4" size (Reduced Port for 6" & 8" Acceptable) with blow-out proof stem and seat retainer design to permit valve to be dead ended in either flow direction. Valve has lockable feature to lock the valve in either the open or shut position. Type 316 stainless steel body, ball and stem, TFE seats and seals, wrench operated, 150 lb. ANSI B16.5 flanged ends, raised face, 1/2" thru 4" size Face-to-face dimensions to conform to ANSI B16.10 for steel gate valves. Screwed body inserts not acceptable. Gear Operator for 6" and 8" size valves. No asbestos allowed.

RATING: 275 PSIG @ 100 DEG. F. or 110 PSIG @ 353 DEG. F.

MANUFACTURER: Modentic VL-11, Sharpe Valve #50116-R, or equal

SIZES: 1/2" thru 8"

MODELS: Modentic Figure No. VL-11-150 , Figure No. BV-150, or equal.

Issue Date: 01/01/89 Revision Date: 09/15/99

Approved by Joseph P. McMahon on 07/17/2001

CCC SPEC. 4.08

SHARPE® VALVES

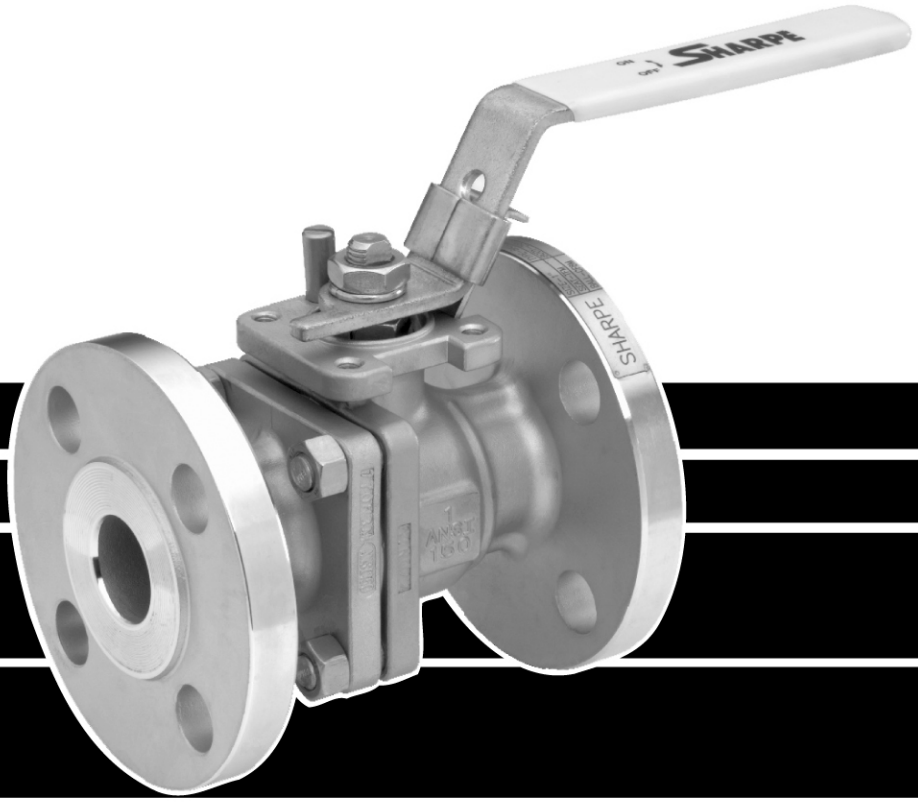

FLANGED FULL PORT BALL VALVE SERIES 50 / CLASS 150

SERIES 50
VALVE PARTS AND IDENTIFICATION

CLASS 150
BLOW OUT PROOF STEM
LOCKING DEVICE

APPLICABLE STANDARDS	
Wall Thickness	ASME B 16.34
Face to Face Dimensions	ASME B 16.10
Flange Dimensions	ASME B 16.5
Pressure Tests	ASME B 16.34 API 598 (Optional)
Basic Design	ASME B16.34

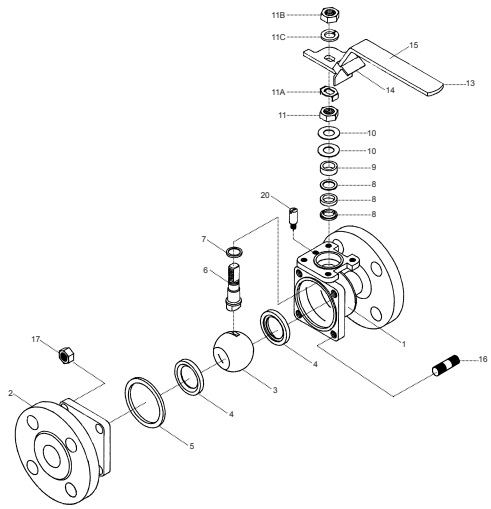

1/2" - 2"

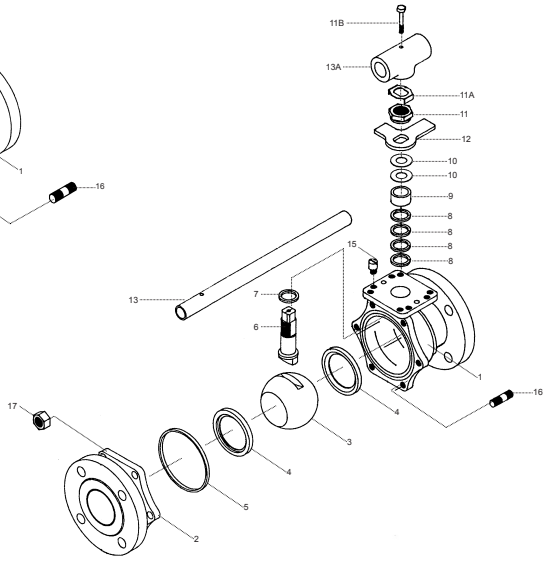

2-1/2" - 4"

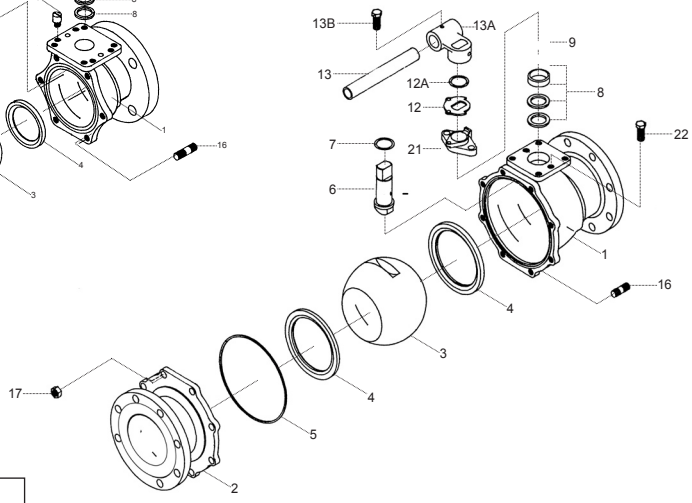

6" - 8"

PART NO.	PART	QTY.	MATERIAL
1	Body	1	316 Stainless Steel ASTM A351 CF8M Alloy 20 ASTM A351 CN7M Carbon Steel ASTM A216 WCB Hastelloy C ASTM A494 GR CW-12MW Monel ASTM A494 GR M35-1
2	End Connector	1	316 Stainless Steel ASTM A351 CF8M Alloy 20 ASTM A351 CN7M Carbon Steel ASTM A216 WCB Hastelloy C ASTM A494 GR CW-12MW Monel ASTM A494 GR M35-1
3	Ball	1	316 Stainless Steel Alloy 20 Hastelloy C
4	Seat	2	TFM(Super TFE) TFE Reinforced TFE NOVA PEEK
5	Body Seal	1	TFE
6	Stem	1	316 Stainless Steel Alloy 20 Hastelloy C 17-4PH (Option)
7	Thrust Bearing	2	Reinforced TFE
8	Stem Packing	3/4	Reinforced TFE
9	Gland Packing	1	304 Stainless Steel
10	Belleville Washer (1/2"-4")	2/4	304 Stainless Steel
11	Packing Nut (1/2"-4")	1	304 Stainless Steel
11A	Lock Tab	1	Stainless Steel
11B	Handle Nut	1	304 Stainless Steel
11C	Lock Washer	1	304 Stainless Steel (1/2"-2")

*See Dimensions

PART NO.	PART	QTY.	MATERIAL
12	Stopper	1	304 Stainless Steel
12A	Snap Ring	1	Stainless Steel (6"-8")
13	Handle	1	304 Stainless Steel (1/2"-2") Galvanized Steel (2-1/2"-4") Ductile Iron (6"-8")
13A	Wrench Block	1	Stainless Steel
13B	Hex Head Bolt	1	304 Stainless Steel
14	Locking Device (1/2"-2")	1	304 Stainless Steel
15	Sleeve	1	Vinyl
16	Body Stud	SEE* N	A193 B8 (SST) A193 B7 (CS)
17	Nut	SEE* N	A194 8 (SST) A194 2H (CS)
20	Stop Pin (1/2"-2") (2-1/2"-4")	1 2	304 Stainless Steel 304 Stainless Steel
21	Gland Flange (6"-8")	1	304 Stainless Steel
22	Gland Bolts (6"-8")	2	304 Stainless Steel

SERIES 50
DIMENSIONS

1/2” - 2”

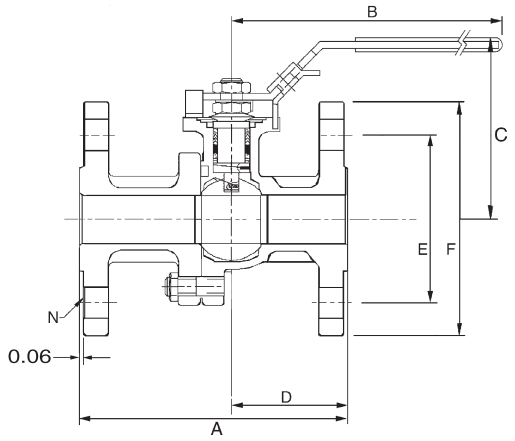

2-1/2” - 4”

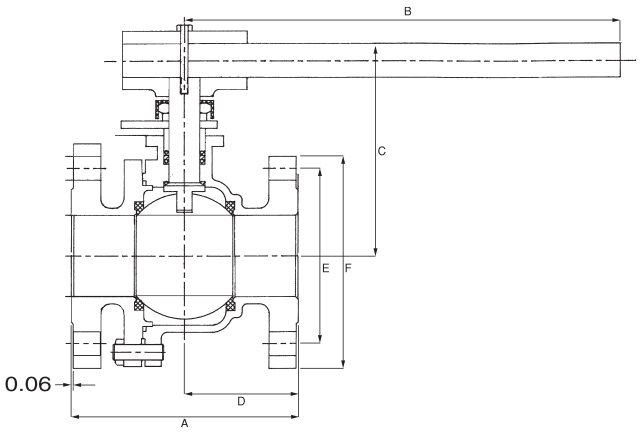

6” - 8”

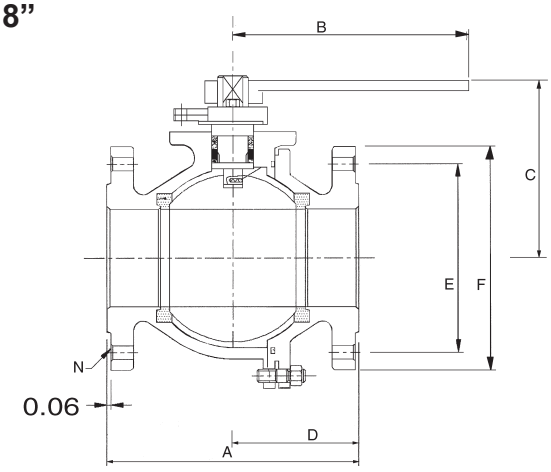

CV DATA	
1/2”	26
3/4”	50
1”	94
1-1/2”	260
2”	480
2-1/2”	750
3”	1300
4”	2300
6”	5400
8”	10000

PORT	
1/2”	0.59
3/4”	0.78
1”	1.00
1-1/2”	1.50
2”	2.00
2-1/2”	2.55
3”	3.00
4”	4.00
6”	6.00
8”	7.88

WEIGHT (lbs.)	
1/2”	4
3/4”	6
1”	8
1-1/2”	15
2”	20
2-1/2”	36
3”	45
4”	75
6”	135
8”	290

SIZE	A	B	C	D	E	F	N	G	H	I	J	K	W
1/2”	4.25	4.75	3.60	1.80	2.38	3.50	4	1.39	3/8-24 UNF	.22	.28	.63	M5
3/4”	4.62	4.75	3.75	2.00	2.75	3.85	4	1.39	3/8-24 UNF	.22	.28	.63	M5
1”	5.00	6.22	3.75	2.12	3.13	4.25	4	1.39	7/16-20 UNF	.30	.30	.90	M6
1-1/2”	6.50	9.00	4.50	2.76	3.56	5.00	4	1.94	9/16-18 UNF	.35	.42	1.18	M8
2”	7.00	9.00	4.80	3.08	4.75	6.00	4	1.94	9/16-18 UNF	.35	.42	1.18	M8
2-1/2”	7.50	13.75	6.70	3.09	5.50	7.00	4	2.84	M20	.55	.55	1.83	M10
3”	8.00	13.75	7.00	3.74	6.00	7.48	4	2.84	1-14 UNS	.745	.66	1.83	M10
4”	9.00	13.75	7.70	4.46	7.50	9.01	8	2.84	1-14 UNS	.745	.66	1.83	M10
6”	15.50	38.97	11.22	7.61	9.50	10.98	8	3.89	1.02	1.64	1.46	3.00	M12
8”	18.00	38.97	11.57	8.34	11.75	13.50	8	4.59	1.02	1.64	1.46	3.00	M12

The dimensions above are for information only, not for construction. For complete actuator mounting dimensions refer to Engineering Bulletin EB-2003.

1/2" - 4"

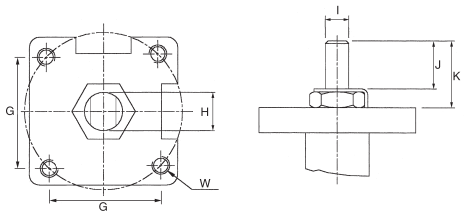

6" - 8"

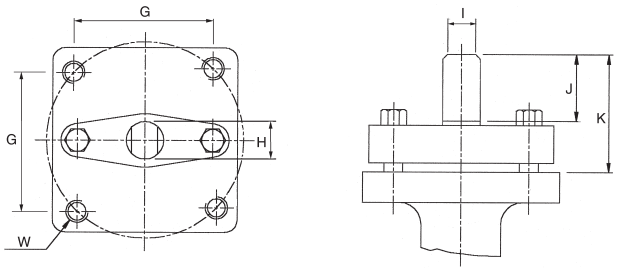

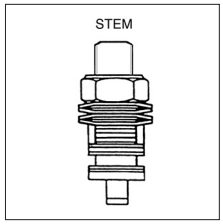

1/2" - 4"
STEM ARRANGEMENT
FOR ACTUATORS

SEAT PRESSURE/TEMPERATURE RATING SERIES 50

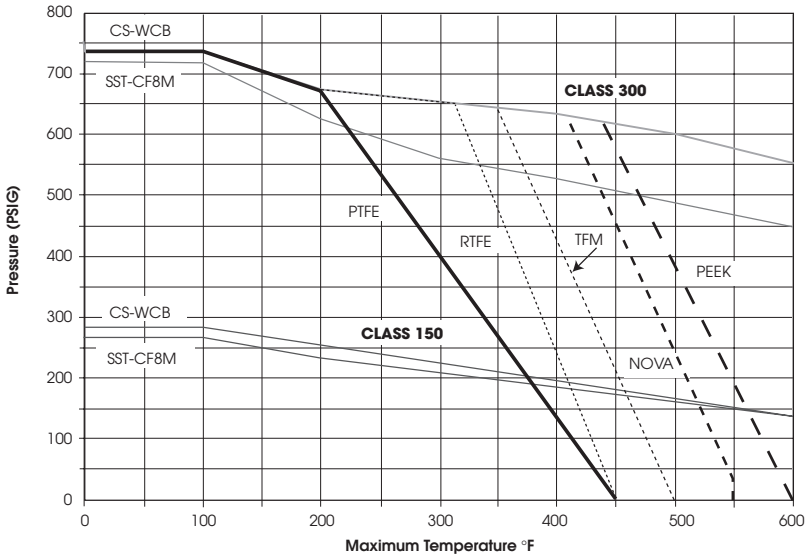

HOW TO ORDER

VALVE SIZE	VALVE SERIES	CLASS	ALLOY	SEATS	OPTIONS
1/2" 3/4" 1" 1-1/2" 2" 2-1/2" 3" 4" 6" 8"	50	150# = 11	2 = Alloy 20 4 = Carbon Steel 6 = Stainless Steel 5 = Hastelloy C 3 = Monel	T = TFE R = RTFE N = NOVA P = Peek M = TFM™	X = Oxygen Service OH = Oval Handle F = Fugitive Emissions Certified ANSI 593.00.01 E = Extended Stem L = Lockable Extended Stem D = Leak detection Stem GO = Gear Operator 7 = 17- 4PH Stem A = Nace

3/4" 50 11 6 T X

SHARPE® VALVES
A Division of Smith-Cooper International, LLC

Toll-Free 1-877-7SHARPE
(877) 774-2773
Fax: (708) 562-9250
E-Mail: info@sharpevalves.com
www.sharpevalves.com
1260 Garnet Drive
Northlake, Illinois 60164 U.S.A.

Due to continuous development of our product range we reserve the right to change the dimensions and information contained in the leaflet as required.
TFM is a registered trademark of Dyneon, LLC.

CalgonCarbon	STRAINERS MATERIAL SPECIFICATION	SPEC NO:
	BASKET STRAINER, TYPE 316 STAINLESS STEEL	22.53

SAP PART NUMBER:

CCC DRAWING NUMBER:

MATERIAL: Perforated basket strainer (Carbon Retainer) for 150 lb. Raised Face Flanges, type 316 stainless steel construction. Basket is to be Fabricated from 14 Gage 316 stainless steel with 1/8" holes drilled on 3/16" centers and covered with 40 mesh 316 stainless steel screen, this will then be covered by a 4 mesh 316 stainless steel support screen (0.063" wire diameter).

RATING: Support Screen is to be designed for 125 PSIG if plugged in forward or reverse flow.

MANUFACTURER: Mack Iron Works Company, or equal.

SIZES: 2" thru 12"

MODELS: Mack Iron Works Company Series PB-R/FF, Style PBL or equal.

Issue Date: 01/01/90 Revision Date: 08/23/90

Approved by Matthew R. McGowan on 06/16/99

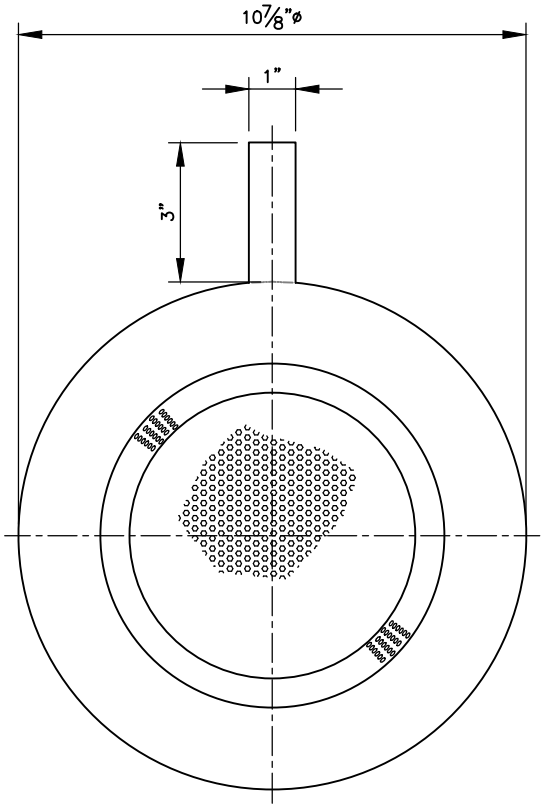

FRONT

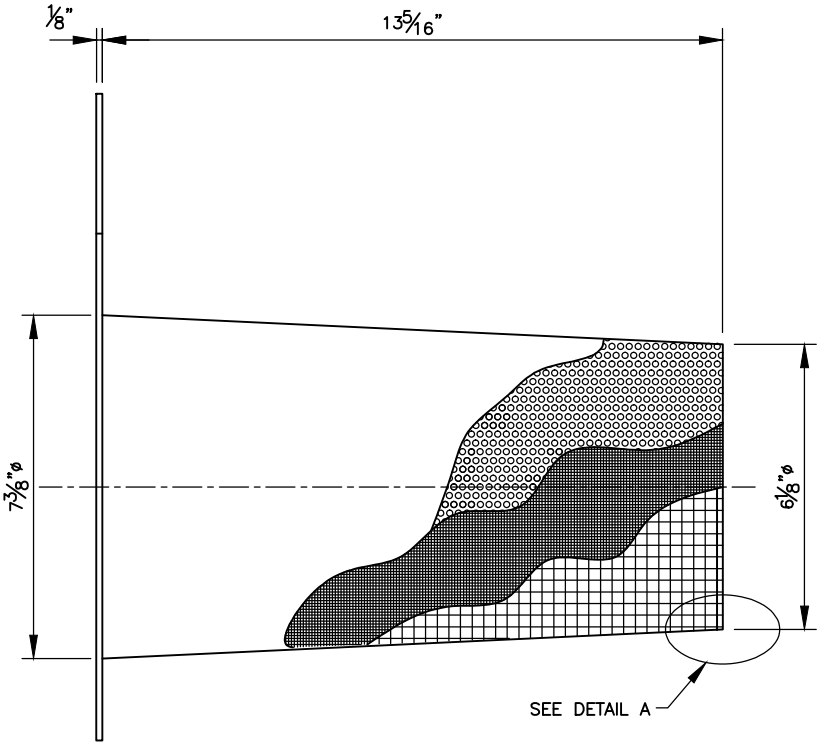

SIDE

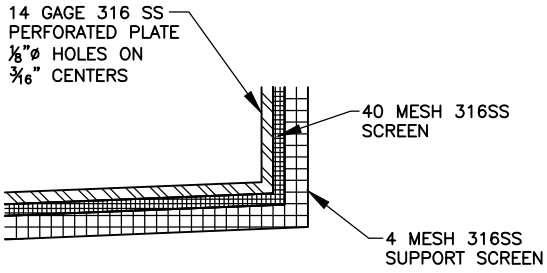

DETAIL A

REV	DESCRIPTION	APP	DATE
2			
1			
0	ISSUED FOR FABRICATION	RES	4/3/07

REVISIONS

THIS DRAWING AND DESIGN IS THE PROPERTY OF CALGON CARBON CORPORATION AND IS NOT TO BE REPRODUCED IN WHOLE OR IN PART NOR EMPLOYED FOR ANY PURPOSE OTHER THAN SPECIFICALLY PERMITTED IN WRITING BY CALGON CARBON CORPORATION. THIS DRAWING LOANED SUBJECT TO RETURN ON DEMAND.

	NAME	DATE
DRAFTER	BKM	8/29/06
DESIGNER		
CHECKER	RES	4/3/07
APPROVAL		
PROJECT No.	STANDARD	

CalgonCarbon

CLIENT: STANDARD

TITLE: 8" STRAINER, 316L SS
CCC SPEC 22.53
DETAILS

DWG. Size	SHEET No.	SCALE
A	1 OF 1	NONE

DWG. No. 90060220 REV. 0

V:\Products\Strainers\90060220 8inch Strainer.dwg Nov 11, 2014 – 5:01pm

CalgonCarbon	STRAINERS MATERIAL SPECIFICATION	SPEC NO:
	FILTER NOZZLE, POLYPROPYLENE	22.106

SAP PART NUMBER:

CCC DRAWING NUMBER:

MATERIAL:

Filter Nozzle, 0.008"(0.2mm) Slot, 1" WW thread x 45 MM long with 3/4" six point nut, polypropylene construction. Expanding ring, 32 MM diameter 1" WW thread for 12-17 MM plate thickness, polypropylene construction. Pipe saddle, FDA approved Rubber to suit a schedule 80 PVC pipe, the pipe header size shall be specified by Calgon Carbon Corporation. All polypropylene parts used in this manufacture shall be virgin grade material and an ivory color.

MANUFACTURER: Orthos or equal.

MODELS: Orthos type C2, or equal.

Issue Date: 03/08/2005 Revision Date:

Approved by Gerald Kirner on 03/08/2005

Technical Information

Design

For general purposes the filter nozzles should be placed on 6" centers, with 8" centers being the maximum recommended (subject to the filter media, single or multi-layer, depth of bed, etc.). The filter nozzles are available in a wide variety of slot sizes to suit the media; and airtubes and tailpipes for air or water backwash can be provided as required.

Consistency of the Material

Filter nozzles made of polypropylene are resistant to many chemicals including the following examples:

@ 140°F / 60°C

- ammonia 10%
- formaldehyde 10%
- isopropanol all concentrations
- methanol 50%
- caustic soda solution 50%
- hydrochloric acid 10%
- sulfuric acid 10%
- soda water
- ozone (68°F / 20°C, 50 pphm)

In addition to virgin polypropylene (max. temperature 140°F), all filter nozzles are also available in glass fiber reinforced polypropylene (max. temperature 230°F) and Kynar (max. temperature 275°F). Other available materials include stainless steel, alloy 20 and hastelloy.

Installation Specifications

Recommended Torque	4.0 ft. lbs.
Max RPM	430

In lower temperatures polypropylene becomes more brittle. If nozzles are to be installed in cold weather, we recommend that all polypropylene materials are first warmed before installation.

When using with hot water (max. continuous temperature up to 230°F / 110°C, polypropylene with chemically combined 30% glass fiber is recommended.

PVDF is recommended for hot water with a continuous temperature of up to 275°F / 135°C. (Conditionally resistant to concentrated caustic solutions.)

Color Coded Polypropylene Nozzles

Slot Size	Color
0.2	ivory
0.3	green
0.35	white
0.5	grey
0.7	yellow
0.8	blue
1.0	black
1.5	orange
2.0	green

All specifications are subject to change without notice.

Conversion Chart

Multiply units in left column by proper factor below

LENGTH	in.	ft.	mm	cm	m
1 inch	1	0.0833	25.4	2.540	0.0254
1 foot	12	1	304.8	30.48	0.3048
1 millimeter	0.0394	0.0033	1	0.100	0.001
1 centimeter	0.3937	0.0328	10	1	0.01
1 meter	39.37	3.281	1000	100	1
AREA	**in.²**	**cm²**			
1 inch²	1	6.452			
1 centimeter²	0.1550	1			
VOLUME	**liter**	**U.S. gal.**			
1 liter	1	0.2642			
1 U.S. gallon	3.785	1			
VOLUME RATE	**gallon / min.**	**m³ / hr.**	**liter / hr.**		
1 gallon/minute	1	0.227	227		
1 m³/hour	4.403	1	1000		
1 liter/hour	0.063	0.001	1		
PRESSURE	**lbs. / in.²**	**ft. water at 39.2°F**	**bar**		
1 pound/in.²	1	2.307	0.069		
1 foot water	0.4335	1	0.0299		
1 Bar	14.50	33.45	1		

Filter Nozzles

Model C2

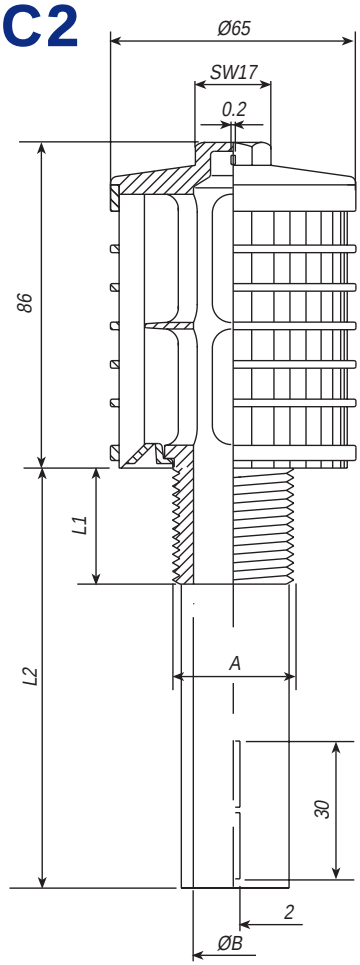

All dimensions in mm
unless otherwise noted.

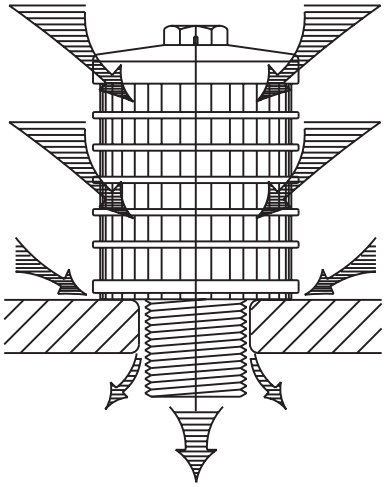

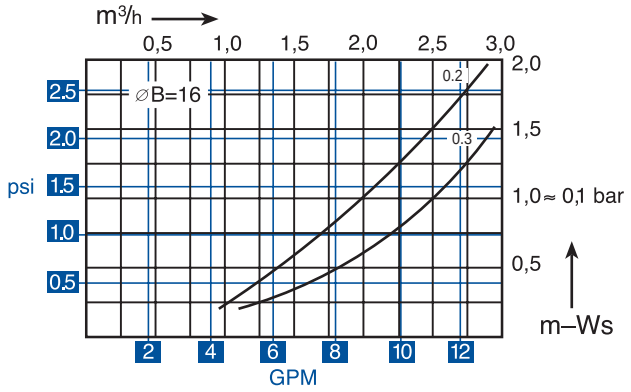

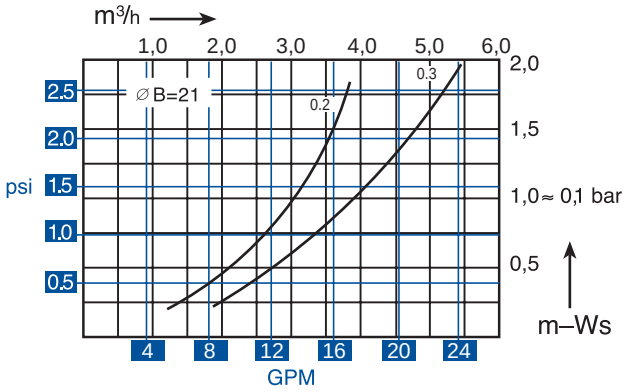

Model C2 Ordering Information

Slots	Thread	ØA	Thread Length — L1	Shaft — L2	ØB
36 x 0.2 = 3.70 cm²	3/4" NPT				16 = 2.00 cm²
36 x 0.3 = 5.50 cm²	1" NPT				21 = 3.40 cm²
	M24	24	20, 45, + 5 + 5...	L1, 80, 110, 140, 200, *up to* 400	16 = 2.00 cm²
	1" WW	25.4	45	L1, 80, 110, 140, 200, *up to* 400	16 = 2.00 cm²
	1-1/4" WW	32	20, 30, 45,	L1, 80, 110, 140, 200, *up to* 400	21 = 3.40 cm²
	G3/4"	26.5	20, 45, + 5 + 5...	L1, 80, 110, 140, 200, *up to* 400	16 = 2.00 cm²

Nuts / Washers / Expanding Rings

Model MU60

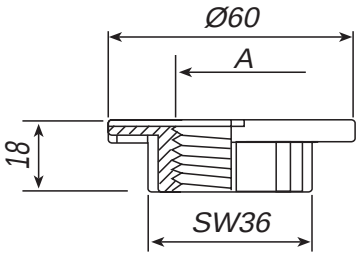

Model MU43

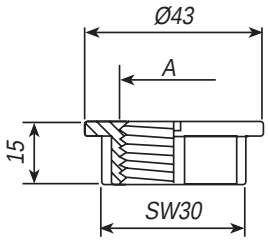

Model MUZ

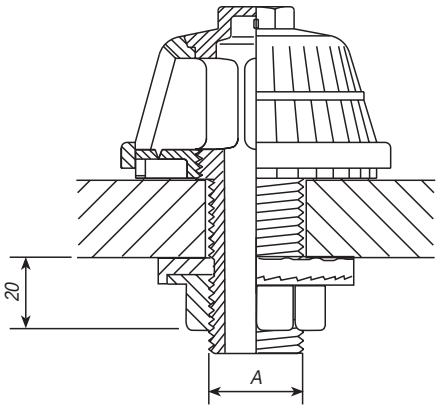

All dimensions in mm unless otherwise noted.

Ordering Information (Nuts)

Model #	Thread (A)
MU60	1-1/4" WW, 1" WW, M24
MU43	1" WW, M24, M20
MUZ	M24

Model DP

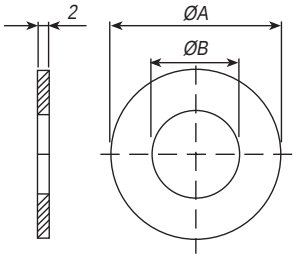

Model DG

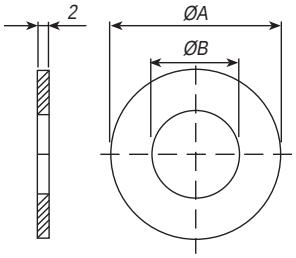

All dimensions in mm unless otherwise noted.

Ordering Information (Washers)

Model #	ØA	ØB	Material
DP	50	32	PP
	70	30	
		27	
		25	
		21	
DG	50	32	Rubber
	70	27	
		25	
		21	

Model DB65

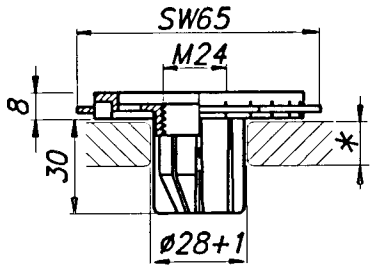

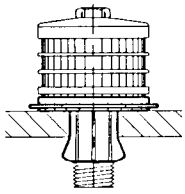

Model KSPB

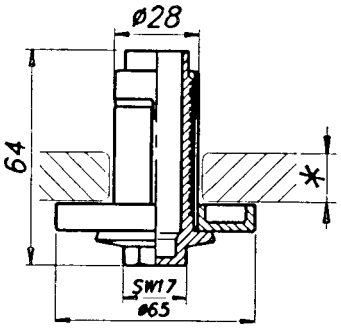

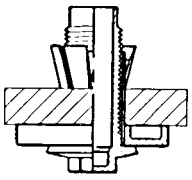

All dimensions in mm unless otherwise noted.

Ordering Information (Expanding Rings)

Model #	Plate Thickness
DB65	8 - 12
	12 - 17
	17 - 22

Model #	Plate Thickness
KSPB	8 - 28
	25 - 45

CalgonCarbon	EXPANSION JOINTS MATERIAL SPECIFICATION	SPEC NO:
	RUBBER EXPANSION JOINT, DOUBLE ARCH TYPE	24.06

SAP PART NUMBER:

CCC DRAWING NUMBER:

MATERIAL: Rubber expansion joint, double arch type, molded neoprene reinforced with multiple plies of nylon. Joint allows 4 way movement and 30 DEG. angular misalignment. Has loose steel backing flanges to be galvanized or zinc plated, 150 # drilling. No gaskets required. Control unit assemblies for pressures specified as 135 psi or greater.

RATING: 225 psi @ 170 DEG. F.

MANUFACTURER: Dynex, Inc., Proco Products, Inc., or Approved Equal.

SIZES: 1" thru 12"

MODELS: Dynex Series 702, Proco Products, Inc., Model 242-A-NN-4, with "blue" I.D. label or Approved Equal.

Issue Date: 01/01/89 Revision Date: 08/30/99

Approved by Matthew R. McGowan on 08/30/99

PROCO

The Expansion Joint and Check Valve People

CCC SPEC 24.06

Molded Spherical Joints Style 240/242

Proco Style 240/242 Molded Spherical Joints

Proco Style 240/242 Spherical Molded Expansion Joints are designed for piping systems to absorb pipe movements, relieve stress, reduce system noise/vibration, compensate for misalignment/offset and to protect rotating mechanical equipment against start-up surge forces.

The molded style 240 single sphere and 242 twin sphere designed bellows are inherently stronger than the conventional hand-built style spool arch type. Internal pressure within a "sphere" is exerted in all directions, distributing forces evenly over a larger area. The spherical design "flowing arch" reduces turbulence and sediment buildup.

Features and Benefits:

Absorbs Directional Movement

Thermal movements appear in any rigid pipe system due to temperature changes. The Style 240 and Style 242 spherical arch expansion joints allow for axial compression or axial extension, lateral deflection as well as angular movement. (Note: Rated movements in this publication are based on one plane movements. Multiple movement conditions are based on a multiple movement calculation. Contact Proco for information when designing multiple pipe movements.)

Easy Installation with Rotating Metallic Flanges

The floating metallic flanges freely rotate on the bellows, compensating for mating flange misalignment, thus speeding up installation time. Gaskets are not required with the Style 240 or Style 242, provided the expansion joints are mated against a flat face flange as required in the installation instructions.

Flange Materials/Drilling

The Proco Style 240 and Style 242 molded expansion joints are furnished complete with plated carbon steel flanges for corrosion protection. 304 or 316 stainless steel flanges are available upon request as well as ANSI 250/300 lb., BS-10, DIN PN10 & PN16 and JIS-10K drilling.

Absorbs Vibration, Noise and Shock

The Proco Style 240 and Style 242 molded expansion joints effectively dampen and insulate downstream piping against the transmission of noise and vibration generated by mechanical equipment. Noise and vibration caused by equipment can cause stress in pipe, pipe guides, anchors and other equipment downstream. Water hammer and pumping impulses can also cause strain, stress or shock to a piping system. Install the Style 240 or Style 242 molded expansion joints to help compensate for these system pressure spikes.

Wide Service Range with Low Cost

Engineered to operate up to 300 PSIG or 265°F, the Proco Style 240 and Style 242 can be specified for a wide range of piping requirements. Compared to conventional hand-built spool type joints, you will invest less money when specifying the mass-produced, consistent high quality, molded single or twin sphere expansion joints.

Material Identification

All Style 240 or Style 242 molded expansion joints have branded elastomer designations. Neoprene Tube/Neoprene Cover (NN) and Nitrile Tube/Neoprene Cover (NP) elastomer designated joints meet the Coast Guard Requirements and conform to ASTM F1123-87. 240C/NP-9 joints have ABS certification.

Large Inventory

Proco Products, Inc. maintains one of the largest inventories of rubber expansion joints in the world. Please contact us for price and availability.

Table 1: Available Styles • Materials

For Specific Elastomer Recommendations, See: **PROCO** "Chemical To Elastomer Guide"

240-A	240-C	240-AV,D,E,M	242-A,B,C	PROCO Material Code	Cover Elastomer [1]	Tube Elastomer [2]	Maximum Operating Temp. °F	Identifying Color Band/Label
		X	X	/BB[3]	Chlorobutyl	Chlorobutyl	250°	Black
		X	X	/EE[3]	EPDM	EPDM	250°	Red
X	X			/EE[3,4]	EPDM	FDA-EPDM	250°	Red
		X		/EQ[3]	EPDM	FDA-EPDM	250°	Red
X	X			/EE-9[3,5]	EPDM	EPDM	265°	DBL Red
	X			/ET-9[3,6]	EPDM	PTFE	265°	Red
	X			/HH	CSM	CSM	212°	Green
		X	X	/NH	Neoprene	CSM	212°	Green
	X			/NJ	Neoprene	FDA-Nitrile	212°	White
	X	X	X	/NN	Neoprene	Neoprene	225°	Blue
	X			/NT[6]	Neoprene	PTFE	225°	Blue
X	X	X	X	/NP	Neoprene	Nitrile	212°	Yellow
X	X			/NP-9[7]	Neoprene	Nitrile-ABS	212°	DBL Yellow

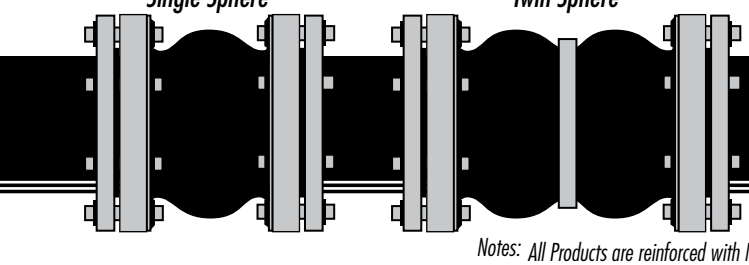

Protecting Piping and Equipment Systems from Stress/Motion

Notes:
All Products are reinforced with Nylon Tire Cord, except 240-A and 240-C which are reinforced with Polyester.
1. *All NN & NP elastomer designated joints meet the Coast Guard Requirements and conform to ASTM F 1123-87 and are marked accordingly.*
2. *Branding Label will be marked as "Food Grade".*
3. *BB, EE or EE-9 are good for 300°F blower service at 20 PSI or less.*
4. *240-A & 240-C expansion joints have black EPDM tube, but are FDA compliant.*
5. *EE-9 joints are peroxide cured.*
6. *Products with PTFE loose liner are not intended for vacuum service.*
7. *NP-9 joints have ABS certification.*
8. *All elastomers above are not intended for steam service.*

Information subject to change without notice.

Style 242 Twin Sphere Performance Data

Table 3: Sizes • Movements • Pressures • Flange Standards • Weights

NOMINAL Pipe Size I.D.	Neutral Length	PROCO Style Number [1]	242 Movement Capability: From Neutral Position [2]					Pressure [4]		Standard Flange Drilling Dimensions [8]					Weight in lbs	
			Axial Compression Inches	Axial Extension Inches	Lateral Deflection Inches	Angular Deflection Degrees	Thrust Factor [3]	Positive PSIG [5]	Vacuum [6] Inches of Hg	Flange O.D. Inches	Bolt Circle Inches	Number of Holes	Size of Holes Inches	Bolt Hole [7] Thread	Exp. Joint & Flanges	Control Unit Set (2 Rod)
1 (25)	10.00	242-C	2.000	1.188	1.750	45	4.43	225	26	4.25	3.13	4	0.625	—	5.2	3.6
1.25 (32)	7.0	**242-A**	2.000	1.188	1.750	45	6.34	225	26	4.63	3.5	4	0.625	1/2-13 UNC	5.3	3.5
	7.0	242-HA						300					0.625	—	6.5	3.5
	10.00	242-C						225					0.625	—	6.2	3.6
1.5 (40)	6.00	242-B	2.000	1.188	1.750	45	6.49	225	26	5.0	3.88	4	0.625	—	6.1	4.6
	6.00	242-HB						300					0.625	—	7.6	4.6
	7.00	**242-A**						225					0.625	1/2-13 UNC	6.8	4.8
	7.00	242-HA						300					0.625	—	8.3	4.8
	10.00	242-C						225					0.625	—	7.7	5.1
2 (50)	6.00	242-B	2.000	1.188	1.750	45	7.07	225	26	6.0	4.75	4	0.750	—	9.0	6.6
	7.00	**242-A**						225		6.0	4.75	4	0.750	—	9.0	7.0
	10.00	242-C						235		6.0	4.75	4	0.750	5/8-11 UNC	10.2	7.3
	6.00	Q-242-HB						300		6.0	4.75	4	0.750	—	10.5	6.6
	7.00	Q-242-HA						300		6.5	5.00	8	0.750	—	10.5	7.0
2.5 (65)	6.00	242-B	2.000	1.188	1.750	43	11.05	225	26	7.0	5.5	4	0.750	—	12.9	7.6
	7.00	**242-A**						225					0.750	—	13.3	8.0
	10.00	242-C						225					0.750	5/8-11 UNC	14.5	8.4
	6.00	Q-242-HB						300					0.750	—	15.3	7.6
	7.00	Q-242-HA						300					0.750	—	15.8	8.0
3 (80)	7.00	**242-A**	2.000	1.188	1.750	38	13.36	225	26	7.5	6.0	4	0.750	5/8-11 UNC	14.3	8.6
	9.00	242-B						225		7.5	6.0	4	0.750	—	15.2	9.0
	10.00	242-C						225		7.5	6.0	4	0.750	—	15.8	9.1
	12.00	242-C						300		7.5	6.0	4	0.750	—	16.0	9.9
	7.00	Q-242-HA						300		8.25	6.62	8	0.875	—	18.2	8.6
3.5 (90)	10.00	242-C	2.000	1.188	1.750	34	18.67	225	26	8.5	7.0	8	0.750	—	20.6	8.1
4 (100)	9.00	**242-A**	2.000	1.375	1.562	34	22.69	225	26	9.0	7.5	8	0.750	5/8-11 UNC	20.3	8.0
	10.00	242-C						225		9.0	7.5	8	0.750	—	21.3	8.2
	12.00	242-C						225		9.0	7.5	8	0.750	—	22.0	8.2
	9.00	Q-242-HA						300		10.0	7.88	8	0.750	3/4-10 UNC	26.4	8.0
5 (125)	9.00	**242-A**	2.000	1.375	1.562	29	30.02	225	26	10.0	8.5	8	0.875	—	24.5	8.3
	10.00	242-C						225		10.0	8.5	8	0.875	—	25.5	9.1
	12.00	242-C						225		10.0	8.5	8	0.875	—	26.0	9.1
	9.00	Q-242-HA						300		11.0	9.25	8	0.875	—	31.4	8.3
6 (150)	9.00	**242-A**	2.000	1.375	1.562	25	41.28	225	26	11.0	9.5	8	0.875	3/4-10 UNC	29.5	11.7
	10.00	242-C						225		11.0	9.5	8	0.875	—	30.5	11.9
	12.00	242-C						225		11.0	9.5	8	0.875	—	31.0	12.0
	14.00	242-C						225		11.0	9.5	8	0.875	—	32.0	12.0
	9.00	Q-242-HA						300		12.5	10.62	12	0.875	—	38.6	11.7
8 (200)	9.00	242-B	2.375	1.375	1.375	19	63.62	225	26	13.5	11.75	8	0.875	—	42.3	14.5
	10.00	242-C						225		13.5	11.75	8	0.875	—	43.4	15.0
	12.00	242-C						225		13.5	11.75	8	0.875	—	44.0	15.2
	13.00	**242-A**						225		13.5	11.75	8	0.875	—	43.8	15.4
	14.00	242-C						225		13.5	11.75	8	0.875	3/4-10 UNC	46.0	16.0
	9.00	Q-242-HB						300		15.0	13.0	12	1.000	—	55.4	14.5
	13.00	Q-242-HA						300		15.0	13.0	12	1.000	—	57.5	15.4

See Notes Page 6

Style 242 Twin Sphere Performance Data

Table 3: Sizes • Movements • Pressures • Flange Standards • Weights

NOMINAL Pipe Size I.D.	Neutral Length	PROCO Style Number [1]	242 Movement Capability: From Neutral Position [2]					Pressure [4]		Standard Flange Drilling Dimensions [8]					Weight in lbs	
			Axial Compression Inches	Axial Extension Inches	Lateral Deflection Inches	Angular Deflection Degrees	Thrust Factor [3]	Positive PSIG [5]	Vacuum [6] Inches of Hg	Flange O.D. Inches	Bolt Circle Inches	Number of Holes	Size of Holes Inches	Bolt Hole [7] Thread	Exp. Joint & Flanges	Control Unit Set (2 Rod)
10 (250)	12.00	242-B	2.375	1.375	1.375	15	103.87	225	26	16.0	14.25	12	1.000	—	64.1	23.5
	13.00	**242-A**						225		16.0	14.25	12	1.000	—	65.5	24.5
	14.00	242-C						225		16.0	14.25	12	1.000	7/8-9 UNC	66.7	24.5
	12.00	Q-242-HB						275		17.5	15.25	16	1.125	—	86.5	23.5
	13.00	Q-242-HA						275		17.5	15.25	16	1.125	—	88.4	24.5
12 (300)	12.00	242-B	2.375	1.375	1.375	13	137.89	225	26	19.0	17.00	12	1.000	—	94.0	30.0
	13.00	**242-A**						225		19.0	17.00	12	1.000	—	95.0	31.0
	14.00	242-C						225		19.0	17.00	12	1.000	7/8-9 UNC	99.1	31.0
	12.00	Q-242-HB						275		20.5	17.75	16	1.250	—	110.0	30.0
	13.00	Q-242-HA						275		20.5	17.75	16	1.250	—	110.0	31.0
14 (350)	13.75	**242-A**	1.750	1.118	1.118	9	182.65	150	26	19.0	18.75	12	1.125	—	112.0	32.0
16 (400)	12.00	242-C	1.750	1.118	1.118	8	240.53	125	26	23.5	21.25	16	1.125	—	124.0	28.8
	12.00	242-HC						175					1.125	—	160.0	28.8
	13.75	**242-A**						125					1.125	—	132.0	30.8
	13.75	242-HA						175					1.125	—	170.2	30.8
18 (450)	12.00	242-C	1.750	1.118	1.118	7	298.65	125	26	25.0	22.75	16	1.250	—	138.0	35.1
	13.75	**242-A**						125					1.250	—	146.0	36.1
	13.75	242-HA						175					1.250	—	181.2	36.1
20 (500)	12.00	242-C	1.750	1.118	1.118	7	363.05	125	26	27.5	25.0	20	1.250	—	172.0	35.0
	13.75	**242-A**						125					1.250	—	182.0	35.5
	13.75	242-HA						175					1.250	—	182.0	35.5
24 (600)	12.00	242-C	1.750	1.118	1.118	5	510.70	110	26	32.5	29.5	20	1.375	—	190.0	47.0
	13.75	**242-A**						110					1.375	—	220.0	48.0
	13.75	242-HA						160					1.375	—	266.2	48.0
30 (750)	12.00	242-C	1.750	1.118	1.118	4	779.31	110	26	38.75	36.0	28	1.375	—	270.0	62.0

NOTES:

Standard Proco Style 242-A Expansion Joints shown in Bold Type are considered Standards and are inventoried in large quantities.

1. *"HW" denotes Heavy Weight Construction. For sizes 2" I.D. thru 12" I.D., Proco will only offer these items with 300 lb. drilling and are denoted by Q-242-HW. All Q-240-HW units will only be sold with control units.*

2. *Movements shown in the above tables are non-concurrent.*

3. *Calculation of Thrust (Thrust Factor). When expansion joints are installed in the pipeline, the static portion of the thrust is calculated as a product of the area of the I.D. of the arch of the expansion joint times the maximum pressure (design, test or surge) that will occur in the line. The result is a force expressed in pounds.*
Take design, surge or test pressure X thrust factor to calculate end thrust.

"Effective Area"

Thrust Factor=

$T = \frac{\pi}{4} (D)^2, (P)$

T= Thrust
P= PSI (Design, Test or Surge)
D= Arch I.D.

4. *Pressure rating is based on 170°F operating temperature. The pressure rating is reduced at higher temperatures.*

5. *Pressures shown at maximum "operating pressure". Test pressure is 1.5 times "operating pressure". Burst pressure is 4 times "operating pressure". If factory hydro-test is required, an additional joint per size must be purchased and tested. Once hydro-tested this joint may not be sent to field for installation as the beaded end will have taken a (compressed) set and can not be reused.*

6. *Vacuum rating is based on neutral installed length, without external load. Products should not be installed in extension for vacuum applications. Flattening of the arch in extended mode will cause the arch to collapse.*

7. *Style 242A/NN (neoprene elastomer only) expansion joints 1.0" I.D. thru 12" I.D. are available with tapped (threaded) holes and must be specified at time of order.*

8. *In addition to standard 150 lb. drilled flanges, Proco can provide expansion joints listed above in 300 lb. drilling, BS-10 (British) drilling, Metric PN10 and PN16 drilling and JIS 10kg/cm drilling.*

Style 240/242 Drilling Chart

Table 4: Flange Drilling

NOMINAL Pipe Size Inch (mm)	American 125/150# Conforms to ANSI B16.1 and B16.5						American 250/300# Conforms to ANSI B16.1 and B16.5					British Standard 10:1962 Conforms to BS 10 Table E				
	Flange Thickness	Flange O.D.	Bolt Circle	No. of Holes	Drilled Hole Size	Threaded Hole Size	Flange Thickness	Flange O.D.	Bolt Circle	No. of Holes	Hole Size	Flange Thickness	Flange O.D.	Bolt Circle	No. of Holes	Hole Size
1 (25)	0.55 (14.0)	4.25 108.0	3.13 79.4	4 4	0.62 15.9	1/2 - 13 UNC	0.63 16.0	4.88 124.0	3.5 88.9	4 4	0.75 19.1	0.59 15.0	4.5 114.0	3.25 82.6	4 4	0.62 15.9
1.25 (32)	0.55 (14.0)	4.63 118.0	3.5 88.9	4 4	0.62 15.9	1/2 - 13 UNC	0.63 16.0	5.25 133.0	3.88 98.4	4 4	0.75 19.1	0.59 15.0	4.75 121.0	3.44 87.3	4 4	0.62 15.9
1.5 (40)	0.55 (14.0)	5.0 127.0	3.88 98.4	4 4	0.62 15.9	1/2 - 13 UNC	0.63 16.0	6.12 156.0	4.50 114.3	4 4	0.88 22.2	0.59 15.0	5.25 133.0	3.88 98.4	4 4	0.62 15.9
2 (50)	0.63 (16.0)	6.0 152.0	4.75 120.7	4 4	0.75 19.1	5/8 - 11 UNC	0.71 18.0	6.50 165.0	5.00 127.0	8 8	0.75 19.1	0.63 16.0	6.0 152.01	4.5 114.3	4 4	0.75 19.1
2.5 (65)	0.71 18.0	7.0 178.0	5.5 139.7	4 4	0.75 19.1	5/8 - 11 UNC	0.71 18.0	7.5 191.0	5.88 149.2	8 8	0.88 22.2	0.71 18.0	6.5 165.0	5.0 127.0	4 4	0.75 19.1
3 (80)	0.71 18.0	7.5 191.0	6.0 152.4	4 4	0.75 19.1	5/8 - 11 UNC	0.79 20.0	8.25 210.0	6.62 168.2	8 8	0.88 22.2	0.71 18.0	7.25 184.0	5.75 146.1	4 4	0.75 19.1
3.5 (90)	0.71 18.0	8.5 216.0	7.0 177.8	8 8	0.75 19.1	5/8 - 11 UNC	0.79 20.0	9.0 229.0	7.25 184.2	8 8	0.88 22.2	0.71 18.0	8.0 203.0	6.5 165.1	8 8	0.75 19.1
4 (100)	0.71 18.0	9.0 229.0	7.5 190.5	8 8	0.75 19.1	5/8 - 11 UNC	0.79 20.0	10.0 254.0	7.88 200.0	8 8	0.88 22.2	0.71 18.0	8.5 216.0	7.0 177.8	8 8	0.75 19.1
5 (125)	0.79 20.0	10.0 254.0	8.5 215.9	8 8	0.88 22.2	3/4 - 10 UNC	0.87 22.0	11.0 279.0	9.25 235.0	8 8	0.88 22.2	0.79 20.0	10.0 254.0	8.25 209.6	8 8	0.75 19.1
6 (150)	0.87 22.0	11.0 279.0	9.5 241.3	8 8	0.88 22.2	3/4 - 10 UNC	0.87 22.2	12.5 318.0	10.62 269.9	12 12	0.88 22.2	0.87 22.2	11.0 279.0	9.25 235.0	8 8	0.88 22.2
8 (200)	0.87 22.0	13.5 343.0	11.75 298.5	8 8	0.88 22.2	3/4 - 10 UNC	0.95 24.0	15.0 381.0	13.0 330.2	12 12	1.00 25.4	0.87 1 22.2	3.25 337.0	11.5 292.1	8 8	0.88 22.2
10 (250)	0.95 24.0	16.0 406.0	14.25 362.0	12 12	1.00 25.4	7/8 - 9 UNC	1.02 26.0	17.5 445.0	15.25 387.4	16 16	1.13 28.6	0.95 24.0	116.0 406.0	14.0 355.6	12 12	0.88 22.2
12 (300)	0.95 24.0	19.0 483.0	17.0 431.8	12 12	1.00 25.4	7/8 - 9 UNC	1.02 26.0	20.5 521.0	17.75 450.9	16 16	1.25 31.8	0.95 24.0	18.0 457.0	16.0 406.4	12 12	1.00 25.4
14 (350)	1.02 26.0	21.0 533.0	18.75 476.3	12 12	1.13 28.6	1 - 8 UNC	1.10 28.0	23.0 584.0	20.25 514.4	20 20	1.25 31.8	1.02 26.0	20.75 527.0	18.5 469.9	12 12	1.00 25.4
16 (400)	1.10 28.0	23.5 597.0	21.25 539.8	16 16	1.13 28.6	1 - 8 UNC	1.18 30.0	25.5 648.0	22.5 571.5	20 20	1.38 34.9	1.10 28.0	22.75 578.0	20.5 520.7	12 12	1.00 25.4
18 (450)	1.18 30.0	25.0 635.0	22.75 577.9	16 16	1.25 31.8	1 1/8 - 7 UNC	1.18 30.0	28.0 711.0	24.75 628.7	24 24	1.38 34.9	1.18 30.0	25.25 641.0	23.0 584.2	16 16	1.00 25.4
20 (500)	1.18 30.0	27.5 699.0	25.0 635.0	20 20	1.25 31.8	1 1/8 - 7 UNC	1.18 30.0	30.5 775.0	27.0 685.8	24 24	1.38 34.9	1.18 30.0	27.75 705.0	25.25 641.4	16 16	1.00 25.4
24 (600)	1.18 30.00	32.06 813.0	29.5 749.3	20 20	1.38 34.9	1 1/4 - 7 UNC	1.18 30.0	36.0 914.0	32.0 812.8	24 24	1.62 41.3	1.18 30.0	32.5 826.0	29.75 755.7	16 16	1.25 31.8
30 (750)	1.26 32.0	38.75 984.0	36.0 914.4	28 28	1.38 34.9	1 1/4 - 7 UNC	1.26 32.0	43.0 1092.0	39.25 997.0	28 28	2.00 50.8	1.26 32.0	39.25 997.0	36.5 927.1	20 20	1.38 34.9

Style 240/242 Drilling Chart

Table 4: Flange Drilling

NOMINAL Pipe Size Inch (mm)	Metric Series Conforms to I.S.O. 2084-1974 Table NP10 Holes to I.S.O. /R-273					Metric Series Conforms to I.S.O. 2084-1974 Table NP16 Holes to I.S.O. /R-273					J.I.S. Standard B-2212 Conforms to J.I.S. 10Kg/cm				
	Flange Thickness	Flange O.D.	Bolt Circle	No. of Holes	Hole Size	Flange Thickness	Flange O.D.	Bolt Circle	No. of Holes	Hole Size	Flange Thickness	Flange O.D.	Bolt Circle	No. of Holes	Hole Size
1 (25)	0.63 16.0	4.53 115.0	3.35 85.0	4 4	0.55 14.0	0.63 16.0	4.53 115.0	3.35 85.0	4 4	0.55 14.0	0.59 (15.0)	4.92 (125.0)	3.54 (90.0)	4 4	0.75 (19.0)
1.25 (32)	0.63 16.0	5.51 140.0	3.94 85.0	4 4	0.71 18.0	0.63 16.0	5.51 140.0	3.94 100.0	4 4	0.71 18.0	0.59 (15.0)	5.31 (135.0)	3.94 (100.0)	4 4	0.75 (19.0)
1.5 (40)	0.63 16.0	5.91 150.0	4.33 110.0	4 4	0.71 18.0	0.63 16.0	5.91 150.0	4.33 110.0	4 4	0.71 18.0	0.59 (15.0)	5.51 (140.0)	4.13 (105.0)	4 4	0.75 (19.0)
2 (50)	0.71 18.0	6.50 165.0	4.92 125.0	4 4	0.71 18.0	0.71 18.0	6.50 165.0	4.92 125.0	4 4	0.71 18.0	0.63 (16.0)	6.10 (155.0)	4.72 (120.0)	4 4	0.75 (19.0)
2.5 (65)	0.71 18.0	7.25 185.0	5.71 145.0	4 4	0.71 18.0	0.71 18.0	7.28 185.0	5.71 145.0	4 4	0.71 18.0	0.71 (18.0)	6.89 (175.0)	5.51 (140.0)	4 4	0.75 (19.0)
3 (80)	0.79 20.0	7.87 200.0	6.3 160.0	8 8	0.71 18.0	0.79 20.0	7.87 200.0	6.30 160.0	8 8	0.71 18.0	0.71 (18.0)	7.28 (185.0)	5.91 (150.0)	8 8	0.75 (19.0)
3.5 (90)	— —	— —	— —	— —	— —	— —	— —	— —	— —	— —	0.71 (18.0)	7.68 (195.0)	6.30 (160.0)	8 8	0.75 (19.0)
4 (100)	0.79 20.0	8.66 220.0	7.09 180.0	8 8	0.71 18.0	0.79 20.0	8.66 220.0	7.09 180.0	8 8	0.71 18.0	0.71 (18.0)	8.27 (210.0)	6.89 (175.0)	8 8	0.75 (19.0)
5 (125)	0.87 22.0	9.84 250.0	8.27 210.0	8 8	0.71 18.0	0.87 22.0	9.84 250.0	8.27 210.0	8 8	0.71 18.0	0.79 (20.0)	9.84 (250.0)	8.27 (210.0)	8 8	0.91 (23.0)
6 (150)	0.87 22.0	11.22 285.0	9.45 240.0	8 8	0.87 22.0	0.87 22.0	11.22 285.0	9.45 240.0	8 8	0.87 22.0	0.87 (22.0)	11.02 (280.0)	9.45 (240.0)	8 8	0.91 (23.0)
8 (200)	0.87 22.0	13.39 340.0	11.61 295.0	8 8	0.87 22.0	0.87 22.0	13.39 340.0	11.61 295.0	12 12	0.87 22.0	0.87 (22.0)	12.99 (330.0)	11.42 (290.0)	12 12	0.91 (23.0)
10 (250)	1.02 26.0	15.55 395.0	13.78 350.0	12 12	0.87 22.0	1.02 26.0	15.94 405.0	13.98 355.0	12 12	1.02 26.0	0.95 (24.0)	15.75 (400.0)	13.98 (355.0)	12 12	0.98 (25.0)
12 (300)	1.02 26.0	17.52 445.0	15.75 400.0	12 12	0.87 22.0	1.02 26.0	18.11 460.0	16.14 410.0	12 12	1.02 26.0	0.95 (24.0)	17.52 (445.0)	15.75 (400.0)	16 16	0.98 (25.0)
14 (350)	1.10 28.0	19.88 505.0	18.11 460.0	16 16	0.87 22.0	1.10 28.0	20.47 520.0	18.50 470.0	16 16	1.02 26.0	1.02 (26.0)	19.29 (490.0)	17.52 (445.0)	16 16	0.98 (25.0)
16 (400)	1.18 30.0	22.24 565.0	20.28 515.0	16 16	1.02 26.0	1.18 30.0	22.83 580.0	20.67 525.0	16 16	1.18 30.0	1.10 (28.0)	22.05 (560.0)	20.08 (510.0)	16 16	1.06 (27.0)
18 (450)	1.18 30.0	24.21 615.0	22.24 565.0	20 20	1.02 26.0	1.18 30.0	25.20 640.0	23.03 585.0	20 20	1.18 30.0	1.18 (30.0)	24.41 (620.0)	22.24 (565.0)	20 20	1.06 (27.0)
20 (500)	1.18 30.0	26.38 670.0	24.41 620.0	20 20	1.02 26.0	1.18 30.0	28.15 715.0	25.59 650.0	20 20	1.30 33.0	1.18 (30.0)	26.57 (675.0)	24.41 (620.0)	20 20	1.06 (27.0)
24 (600)	1.18 30.0	30.71 780.0	28.54 725.0	20 20	1.18 30.0	1.18 30.0	33.07 840.0	30.31 770.0	20 20	1.42 36.0	1.18 (30.0)	31.30 (795.0)	28.74 (730.0)	24 24	1.30 (33.0)
30 (750)	1.26 32.0	37.99 965.0	35.43 900.0	24 24	1.30 33.0	1.26 32.0	38.19 970.0	35.43 900.0	24 24	1.42 36.0	1.26 (32.0)	38.19 (970.0)	35.07 (900.0)	24 24	1.30 (33.0)

Drilling Chart for Bolting Requirements

Table 5:	Standard Drilling for PROCO Rubber Expansion Joints					Thickness of Materials for PROCO Rubber Expansion Joints			Control Unit Plate Detail	
	Flange Dimensions [2]					Material Thickness [1] for Bolt Length Requirements				
Nominal Pipe Size Expansion Joint I.D. Inch /(mm)	Flange O.D. Inch / (mm)	Bolt Circle Inch / (mm)	Number Of Holes	Size Of Holes Inch / (mm)	Bolt Hole Thread	Nominal Flange/ Beaded End Thickness Inch / (mm) (Approx. Value)	Adjacent Mating [3] Flange Thickness	Max. Control [4] Rod Plate Thickness Inch / (mm)	Control Rod [6] Plate O.D. Inch / (mm)	Maximum [7] Rod Diameter Inch / (mm)
1 (25)	4.25 (108.0)	3.13	4	0.625	1/2-13 UNC	1.25 (31.75)	CUSTOMER TO SPECIFY MATING FLANGE THICKNESS	0.375 (9.53)	8.375 (215.9)	0.625 (15.9)
1.25 (32)	4.63 (118.0)	3.5	4	0.625	1/2-13 UNC	1.25 (31.75)		0.375 (9.53)	8.750 (222.3)	0.625 (15.9)
1.5 (40)	5.0 (127.0)	3.88	4	0.625	1/2-13 UNC	1.25 (31.75)		0.375 (9.53)	9.125 (231.8)	0.625 (15.9)
2 (50)	6.00 (152.00)	4.75 (120.65)	4	0.750 (19.05)	5/8-11 UNC	1.25 (31.75)		0.375 (9.53)	10.125 (257.2)	0.625 (15.9)
2.5 (65)	7.00 (178.00)	5.50 (139.70)	4	0.750 (19.05)	5/8-11 UNC	1.25 (31.75)		0.375 (9.53)	11.125 (282.6)	0.625 (15.9)
3 (80)	7.50 (191.00)	6.00 (152.40)	4	0.750 (19.05)	5/8-11 UNC	1.25 (31.75)		0.375 (9.53)	11.625 (295.3)	0.625 (15.9)
3.5 (90)	8.5 (216.0)	7.0 (177.80)	8	0.750 (19.05)	5/8-11 UNC	1.25 (31.75)		0.375 (9.53)	12.625 (320.7)	0.625 (15.9)
4 (100)	9.00 (229.00)	7.50 (190.50)	8	0.750 (19.05)	5/8-11 UNC	1.25 (31.75)		0.375 (9.53)	13.125 (333.4)	0.625 (15.9)
5 (125)	10.00 (254.00)	8.50 (215.90)	8	0.875 (22.23)	3/4-10 UNC	1.50 (38.10)		0.500 (12.70)	14.125 (358.8)	0.625 (15.9)
6 (150)	11.00 (279.00)	9.50 (241.30)	8	0.875 (22.23)	3/4-10 UNC	1.50 (38.10)		0.500 (12.70)	15.125 (384.2)	0.625 (15.9)
8 (200)	13.50 (343.00)	11.75 (298.45)	8	0.875 (22.23)	3/4-10 UNC	1.50 (38.10)		0.750 (19.05)	19.125 (485.8)	1.000 (25.4)
10 (250)	16.00 (406.00)	14.25 (361.95)	12	1.000 (25.40)	7/8-9 UNC	1.50 (38.10)		0.750 (19.05)	21.625 (549.3)	1.000 (25.4)
12 (300)	19.00 (483.00)	17.00 (431.80)	12	1.000 (25.40)	7/8-9 UNC	1.50 (38.10)		0.750 (19.05)	24.625 (625.5)	1.000 (25.4)
14 (350)	21.00 (533.00)	18.75 (476.25)	12	1.125 (28.58)	—	1.75 (44.45)		0.750 (19.05)	26.625 (676.3)	1.000 (25.4)
16 (400)	23.50 (597.00)	21.25 (539.75)	16	1.125 (28.58)	—	1.75 (44.45)		0.750 (19.05)	30.125 (765.2)	1.250 (31.8)
18 (450)	25.00 (635.00)	22.75 (577.85)	16	1.250 (31.75)	—	2.00 (50.80)		0.750 (19.05)	31.625 (803.3)	1.250 (31.8)
20 (500)	27.50 (699.00)	25.00 (635.00)	20	1.250 (31.75)	—	2.00 (50.80)		0.750 (19.05)	34.125 (866.8)	1.250 (31.8)
24 (600)	32.00 (813.00)	29.50 (749.30)	20	1.375 (34.93)	—	2.00 (50.80)		1.000 (25.40)	38.625 (981.1)	1.250 (31.8)
30 (750)	38.75 (984.00)	36.00 (914.40)	28	1.375 (34.93)	—	2.00 (50.80)		1.250 (31.75)	46.375 (1177.9)	1.500 (38.1)

Metric Conversion Formula: Nominal I.D.: in. x 25 = mm; Dimensions/ Thickness': in. x 25.4 = mm.

Notes:

1. *Limit/Control Rod length is determined by neutral length of rubber expansion joint, rated extension, control rod plate thickness, mating flange thickness and number of nuts. Consult PROCO for rod lengths.*
2. *Flange Dimensions shown are in accordance with ANSI B16.1 and ANSI B16.5 Class 125/150, AWWA C-207-07, Tbl 2 and 3 - Class D, Table 4 - Class E. Hole size shown is 1/8" larger than AWWA Standard.*
3. *Adjacent mating flange thickness is required to determine overall rod length and compression sleeve length (if required).*
4. *Plate thickness is based on a maximum width PROCO would use to design a Limit/Control Rod plate.*
5. *Flat Washers required at ring splits and are supplied by others.*
6. *Control rod plate O.D. installed dimension is based on a maximum O.D. Proco would supply.*
7. *Control rod diameter is based on a maximum diameter Proco would use to design a control rod.*

Drilling Chart for Bolting Requirements

A - Flange/Beaded End Thickness (Approximated Figure)
B - Adjacent Mating Flange Thickness (By Others)
C - Control Unit Plate Thickness
D - Double Nut Thickness is determined by Control Rod Diameter
E - Control Rod Bolt Length is determined by A through E + OAL [1]
F - Control Rod Control Rod Plate O.D.
G - Maximum Rod Diameter

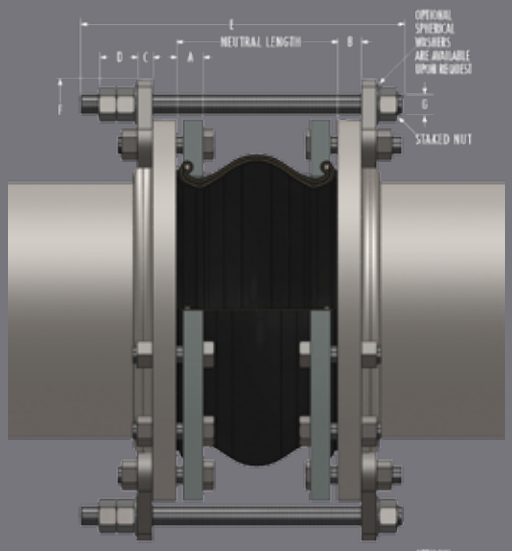

Figure 1
Style 240

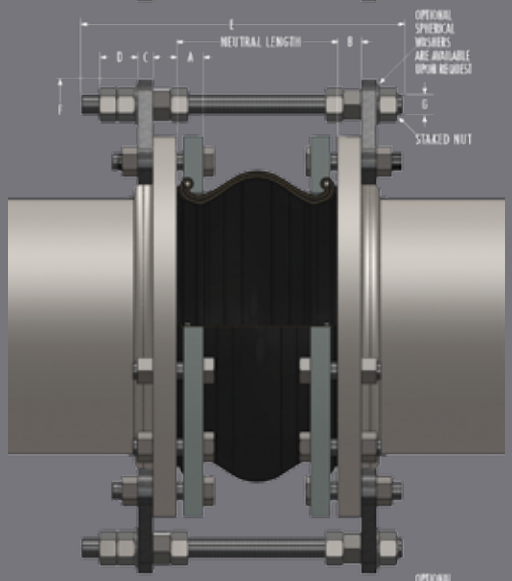

Figure 2
Style 240

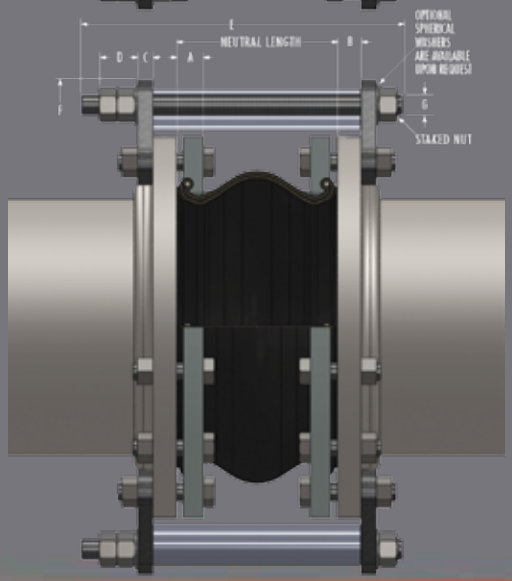

Figure 3
Style 240

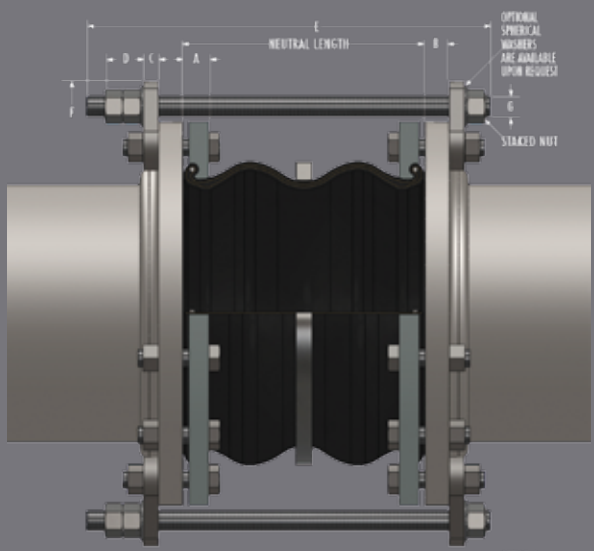

Figure 1
Style 242

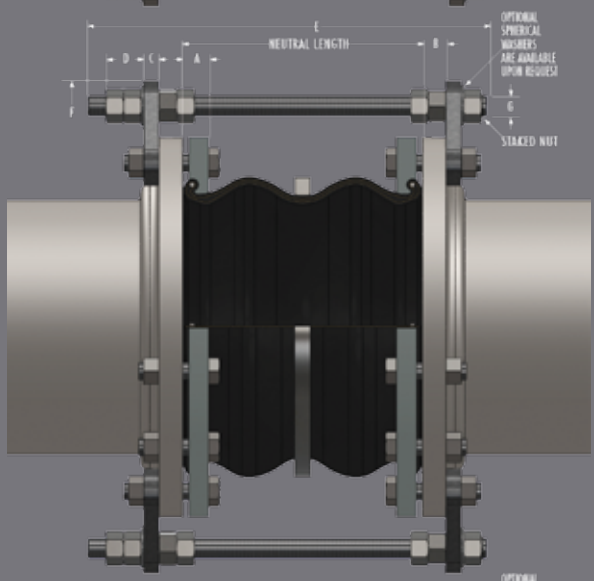

Figure 2
Style 242

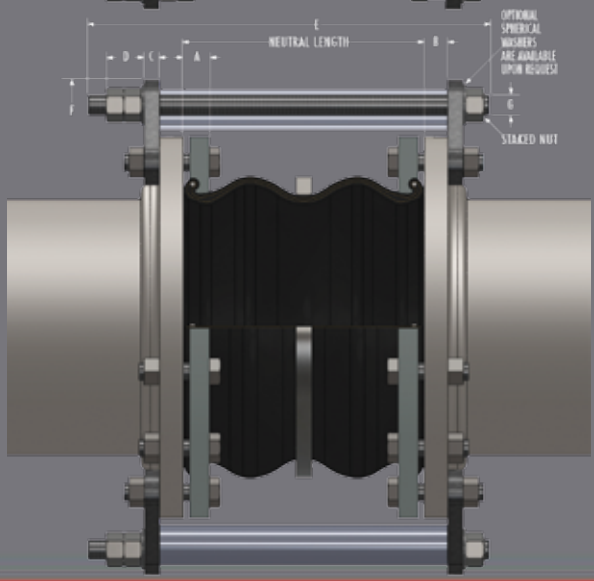

Figure 3
Style 242

Use of Control Units with Rubber Expansion Joints

Definition

A control unit assembly is a system of two or more control rod units (limit rods, tie rods or compression sleeves) placed across an expansion joint from flange to flange to minimize possible damage caused by excessive motion of a pipeline. The control unit assemblies can be set at the maximum allowable expansion and/or contraction of the rubber expansion joint. When used in this manner, control units are an additional safety factor and can minimize possible damage to adjacent equipment.

Rubber expansion joints should be installed between two fixed anchor points in a piping system. The pipe system must be rigidly anchored on both sides of the expansion joint to control expansion or contraction of the line. Piping anchors must be capable of withstanding the line thrusts generated by internal pressure or wide temperature fluctuations.

When proper anchoring cannot be provided, **CONTROL UNITS ARE REQUIRED.** For un-anchored piping systems nuts shall be tightened snug against rod plate to prevent over-extension due to pressure thrust created by expansion joint. Refer to "Thrust Factor" in Table 2, note 5 in this manual. Please also see Table 7 for number of control rods recommended based on maximum serge for test pressure of the system

Listed below are three (3) control unit configurations supplied by PROCO and are commonly used with rubber expansion joints in piping systems.

Figure 1

Known as a **LIMIT ROD**, this control unit configuration will allow an expansion joint to extend to a predetermined extension setting. Nuts shall be field-set to no more than the maximum allowable extension movement of a rubber expansion joint (unless used in an un-anchored system). Refer to Table 2 in this manual for allowable movement capabilities. Spherical washers can also be furnished (upon request) to combat any "nut-to-plate" binding during offset. ***Consult the systems engineer for proper nut settings prior to system operation.***

Figure 2

Known as a **LIMIT/CONTROL ROD**, this control unit configuration is used to allow specified pipe expansion (expansion joint axial compression) and pipe contraction (expansion joint axial extension) movements. Nuts shall be field set to no more than the maximum allowable extension (unless used in an un-anchored pipe system) or compression of a rubber expansion joint. Refer to Table 2 in this manual for allowable movement capabilities. Internal and external nuts can also be field-set to allow for no movement in the horizontal plane. This setting will allow the rubber to move laterally while keeping expansion joint thrust forces low on adjacent equipment. Spherical washers can also be furnished (upon request) to combat any potential "nut-to-plate" binding during offset. ***Limit/Control rods with internal nuts must be specified at the time of inquiry. Consult the systems engineer for proper nut settings prior to system operation.***

Figure 3

Known as a **COMPRESSION SLEEVE**, this configuration is used to allow for specified pipe expansion (expansion joint axial compression) and pipe contraction (expansion joint extension) movements. Nuts shall be field-set to no more than the maximum allowable extension (unless used in an un-anchored pipe system) of a rubber expansion joint. Refer to Table 2 in this manual for allowable movement capabilities. PROCO will manufacture each compression sleeve to allow for no axial movement unless otherwise specified by the purchaser. Compression sleeves shall be field-trimmed to meet required allowable axial movement as set forth by system requirements. Spherical washers can also be furnished (upon request) to combat any potential "nut-to-plate" binding during offset. ***Consult the systems engineer for proper sleeve lengths prior to system operation.***

Important Control Unit Considerations

The number of rods, control rod diameters and control rod plate thicknesses are important considerations when specifying control units for an application. As a minimum, specifying engineers or purchasers shall follow the guidelines as set forth in Appendix C of the Fluid Sealing Association's Technical Handbook, Seventh Edition. PROCO engineers its control unit assemblies to system requirements. Our designs incorporate an allowable stress of 65% of material yield for each rod and plate (rod and plate material to be specified by purchaser). Therefore, it is important to provide pressure and temperature ratings to PROCO when requesting control units for rubber expansion joints. It is also important to provide adjacent mating flange thickness or mating specifications to ensure correct rod lengths are provided.

Installation Instructions for Limit Rods

1. Assemble expansion joint between pipe flanges in its manufactured face-to-face length.

2. Assemble control rod plates behind pipe flanges as shown. Flange bolts or all-thread studs through the control rod plate must be longer to accommodate the plate thickness. Control rod plates should be equally spaced around the flange. Depending upon the size and pressure rating of the system, 2, 3, 4, or more control/limit rods may be required. Refer to Table 4 in this manual or to the Fluid Sealing Association's Technical Handbook, Seventh Edition, for control rod pressure ratings.

3. Insert control/limit rods through top plate holes. Steel flat washers are to be positioned at outer plate surface.

4. If a single nut per unit is furnished, position this nut so that there is a gap between the nut and the steel flat washer. This gap is equal to the joint's maximum extension (commencing with the nominal face-to-face length). To lock this nut in position, either "stake" the thread in two places or tack weld the nut to the rod. If two nuts are supplied, the nuts will create a "jamming" effect to prevent loosening. (Nuts should be snug against the flat washer and control rod plate when piping system is un-anchored.)

Note: Consult the manufacturer if there are any questions as to the rated compression and elongation. These two dimensions are critical in setting the nuts and sizing the compression pipe sleeve (if supplied).

5. If there is a requirement for compression pipe sleeves, an ordinary pipe may be used, sized in length to allow the joint to be compressed to its normal limit.

6. If there is a requirement for optional spherical washers, these washers are to be positioned at the outer plate surface and backed up by movable double nuts.

Limit Rods

Figure 1
Style 240

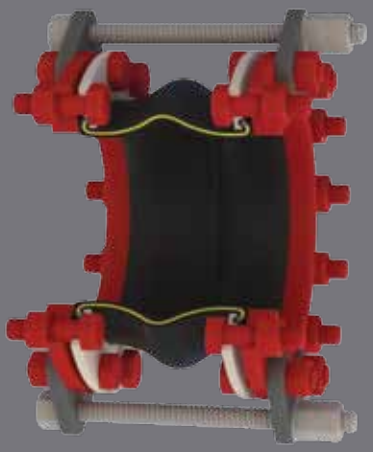

Figure 1
Style 242

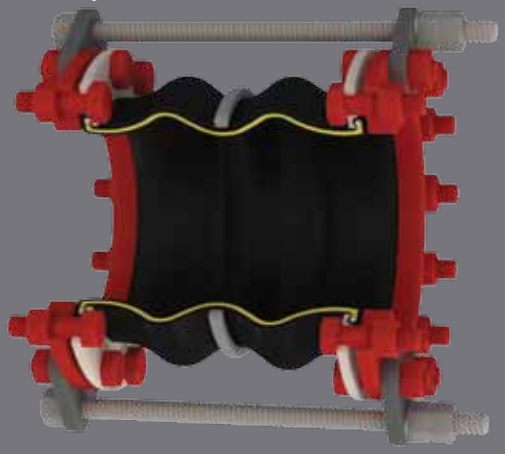

Figure 2
Style 240

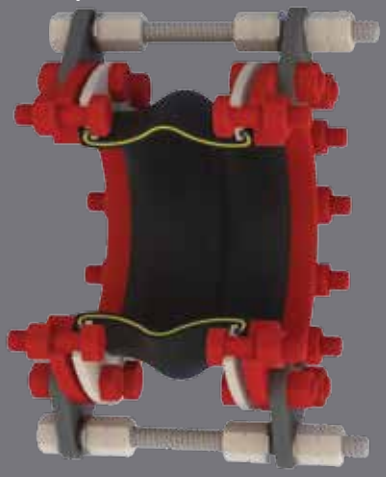

Figure 2
Style 242

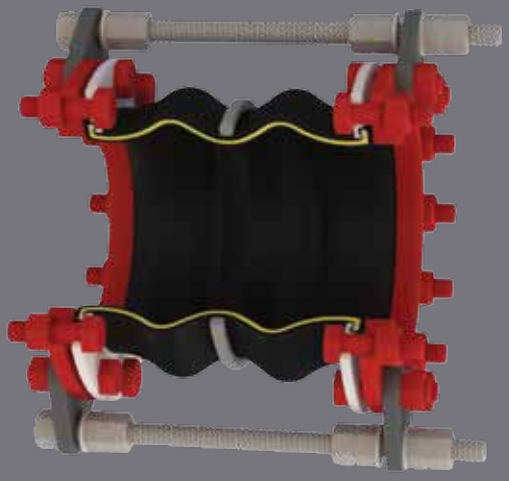

Figure 3
Style 240

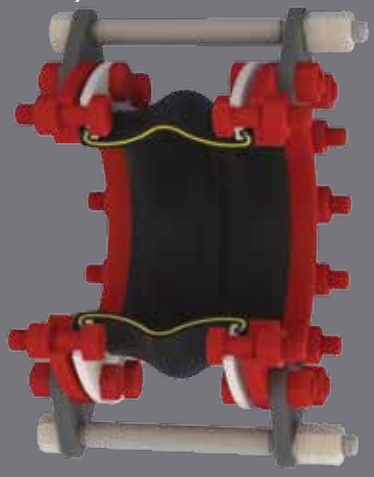

Figure 3
Style 242

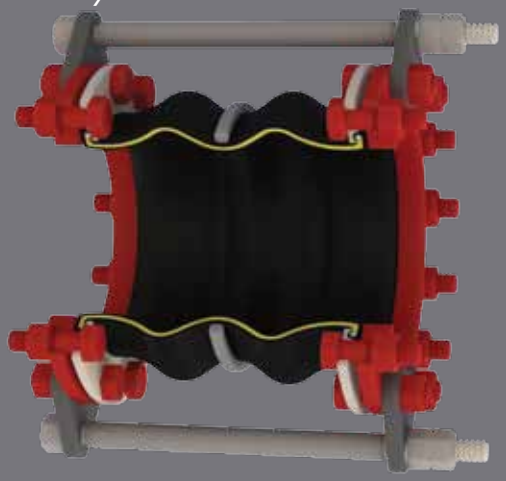

Table 6: Control Units/Unanchored

Control Units must be installed when pressures (test • design • surge • operating) exceed rating below:

Pipe Size	Series 240 P.S.I.G.	Series 242 P.S.I.G.
1″ thru 4″	180	135
5″ thru 10″	135	135
12″ thru 14″	90	90
16″ thru 24″	45	45
30″	35	35

Table 7:

Nominal Pipe Size Expansion Joint I.D. Inch /(mm)		Maximum Surge or Test Pressure of the System — Number of Control Rods Recommended			
		2	4	6	8
1	(25)	949	•	•	•
1.25	(32)	830	•	•	•
1.5	(40)	510	•	•	•
2	(50)	661	•	•	•
2.5	(65)	529	•	•	•
3	(75)	441	•	•	•
4	(100)	311	622	•	•
5	(125)	235	470	•	•
6	(150)	186	371	•	•
8	(200)	163	326	•	•
10	(250)	163	325	488	•
12	(300)	160	320	481	•
14	(350)	112	223	335	•
16	(400)	113	227	340	453
18	(450)	94	187	281	375
20	(500)	79	158	236	315
24	(600)	74	147	221	294
30	(750)	70	141	211	281

Note:
Pressures listed above do not relate to the actual design pressure of the expansion joint products, but are the maximum surge or pressure for a specific control rod nominal pipe size.

Installation Instructions for Non-Metallic Expansion Joints with Beaded End Flanges

1. Service Conditions:

Make sure the expansion joint rating for temperature, pressure, vacuum*, movements and selection of elastomeric materials match the system requirements. Contact the manufacturer if the system requirements exceed those of the expansion joint selected.
(*Vacuum service for spherical rubber connectors: Vacuum rating is based on neutral installed length. These products should not be installed "extended" on vacuum applications.)

2. Alignment:

Expansion joints are not designed to make up for piping misalignment errors. Piping misalignment should be no more than 1/8" in any direction. Misalignment of an expansion joint will reduce the rated movements and can induce severe stress of the material properties, thus causing reduced service life.

3. Anchoring:

Anchors are required wherever the piping system changes direction. Expansion joints should be located as close as possible to anchor points. If an anchoring system is not used, it is recommended that control rods be installed on the expansion joint to prevent excessive movements from occurring due to pressure thrust of the line.

4. Pipe Support:

Piping must be supported so expansion joints do not carry any pipe weight.

5. Mating Flanges:

Install the expansion joint against the mating pipe flanges and install bolts so that the bolt head is against the expansion joint flange. Flange-to-flange dimension of the expansion joint must match the breech opening*. (*A spherical rubber connector must be compressed 1/8" to 3/16" during installation in order to obtain a correct installed face-to-face dimension.)

Make sure the mating flanges are clean and are a flat-faced type. When attaching beaded end flange expansion joints to raised face flanges, the use of metal gaskets are required to prevent metal flange faces from cutting rubber bead during installation.
Never install expansion joints next to wafer type check or butterfly valves. Serious damage to the rubber flange bead can result due to lack of flange mating surface and/or bolt connection.

6. Bolting Torque:

Table 8 shows the recommended torque values for non-metallic expansion joints with beaded end type-flanges: Tighten bolts in stages by alternating around the flange. Use the recommended torque values in Table 8 to achieve a good seal. Never tighten an expansion joint to the point that there is metal-to-metal contact between the expansion joint flanges and the mating flanges. A slight bulge in the rubber beaded end should create a flush tight seal.
Note: Torque values are approximate due to mating flange surfaces, installation offsets, operating pressures and environmental conditions.

7. Storage:

Ideal storage is in a warehouse with a relatively dry, cool location. Store flanges face down on a pallet or wooden platform. Do not store other heavy items on top of the expansion joints. Ten year shelf life can be expected with ideal conditions. If storage must be outdoors, place on a wooden platform and joints should not be in contact with the ground. Cover with a tarpaulin.

8. Large Joint Handling:

Do not lift with ropes or bars through the bolt holes. If lifting through the bore, use padding or a saddle to distribute the weight. Make sure cables or forklift tines do not contact the rubber. Do not let expansion joints sit vertically on the edges of the flanges for any period of time.

9. Additional Tips:

A. Do not insulate over a non-metallic expansion joint. This facilitates inspection of the tightness of the joint bolting.
B. It is acceptable (but not necessary) to lubricate the expansion joint flanges with a thin film of graphite dispersed in glycerin or water to ease disassembly at a later time.
C. Do not weld in the near vicinity of a non-metallic joint.
D. If expansion joints are to be installed underground, or will be submerged in water, contact manufacturer for specific recommendations.
E. If the expansion joint will be installed outdoors, make sure the cover material will withstand ozone, sunlight, etc.
F. Check the tightness of lead-free flanges two or three weeks after installation and retighten if necessary.

Warning: Expansion joints may operate in pipelines or equipment carrying fluids and/or gasses at elevated temperature and pressures and may transport hazardous materials. Precautions should be taken to protect personnel in the event of leakage or splash. Rubber joints should not be installed in areas where inspection is impossible. Make sure proper drainage is available in the event of leakage when operating personnel are not available.

Installation Instructions for Non-Metallic Expansion Joints with Beaded End Flanges

Table 8:	Bolt-Torque				
Nominal Pipe Size Expansion Joint I.D. Inch /(mm)	Step 1 FT-LBS (Nm)	Rest	Step 2 FT-LBS (Nm)	Rest	Step 3 FT-LBS (Nm)
1 (25)	18 (25)	30 Min	30 (40)	60 Min	45-60 (60-80)
1.25 (32)	18 (25)	30 Min	30 (40)	60 Min	45-60 (60-80)
1.5 (40)	18 (25)	30 Min	30 (40)	60 Min	45-60 (60-80)
2 (50)	18 (25)	30 Min	30 (40)	60 Min	45-60 (60-80)
2.5 (65)	18 (25)	30 Min	35 (50)	60 Min	50-60 (70-80)
3 (80)	25 (35)	30 Min	45 (60)	60 Min	60-75 (80-100)
3.5 (90)	25 (35)	30 Min	45 (60)	60 Min	60-75 (80-100)
4 (100)	25 (35)	30 Min	45 (60)	60 Min	60-75 (80-100)
5 (125)	25 (35)	30 Min	45 (60)	60 Min	60-75 (80-100)
6 (150)	30 (40)	30 Min	50 (70)	60 Min	60-75 (80-100)
8 (200)	30 (40)	30 Min	50 (70)	60 Min	60-75 (80-100)
10 (250)	30 (40)	30 Min	50 (70)	60 Min	75-85 (100-115)
12 (300)	30 (40)	30 Min	50 (70)	60 Min	75-85 (100-115)
14 (350)	30 (40)	30 Min	60 (80)	60 Min	75-95 (110-130)
16 (400)	30 (40)	30 Min	60 (80)	60 Min	75-95 (110-130)
18 (450)	30 (40)	30 Min	60 (80)	60 Min	90-95 (120-130)
20 (500)	30 (40)	30 Min	65 (90)	60 Min	95-185 (130-250)
24 (600)	30 (40)	30 Min	65 (90)	60 Min	95-185 (130-250)
30 (750)	30 (40)	30 Min	65 (90)	60 Min	95-220 (130-300)

Note: Bolt torque based on new bolts and nuts

Right: Flanges with correct ID help prevent damage to rubber.

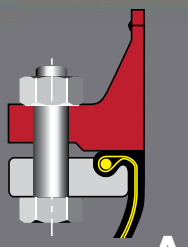

Wrong: Insure matting flanges I.D. is flush with rubber.

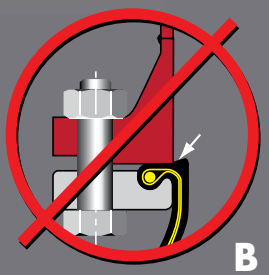

Right: Weld neck flanges with correct ID prevent damage to rubber.

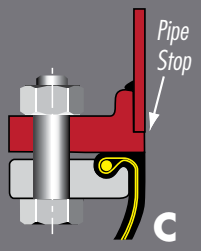

Wrong: Uneven end of pipe can cause damage to rubber.

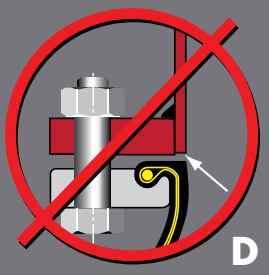

Right: In case of B, D, F an additional metal gasket can be used to prevent damage to rubber.

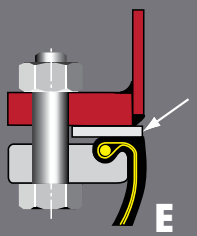

Wrong: Inner edge of flanges damages rubber.

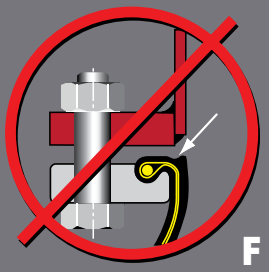

Right: Well rounded smooth edge prevents damage to rubber.

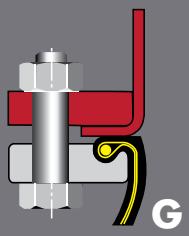

Tighten opposing nuts/bolts gradually according to the following sequence

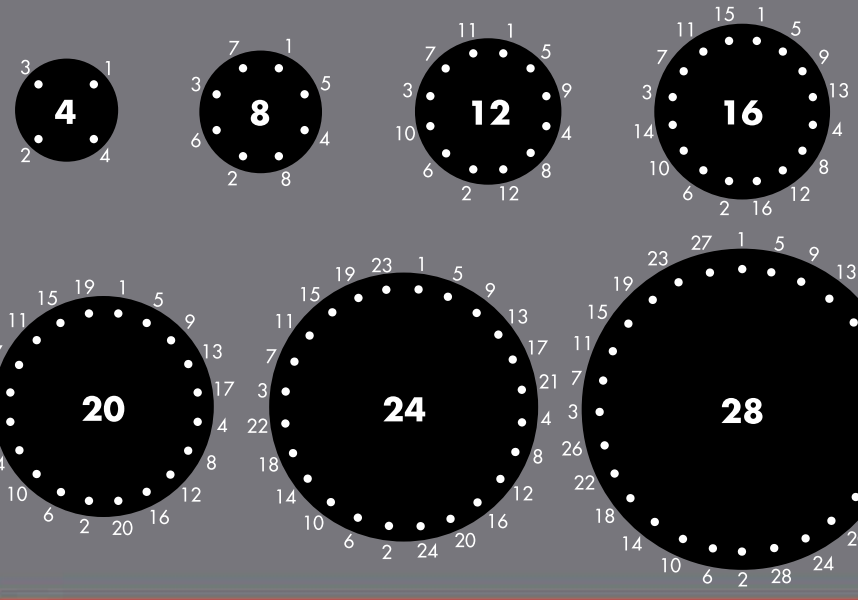

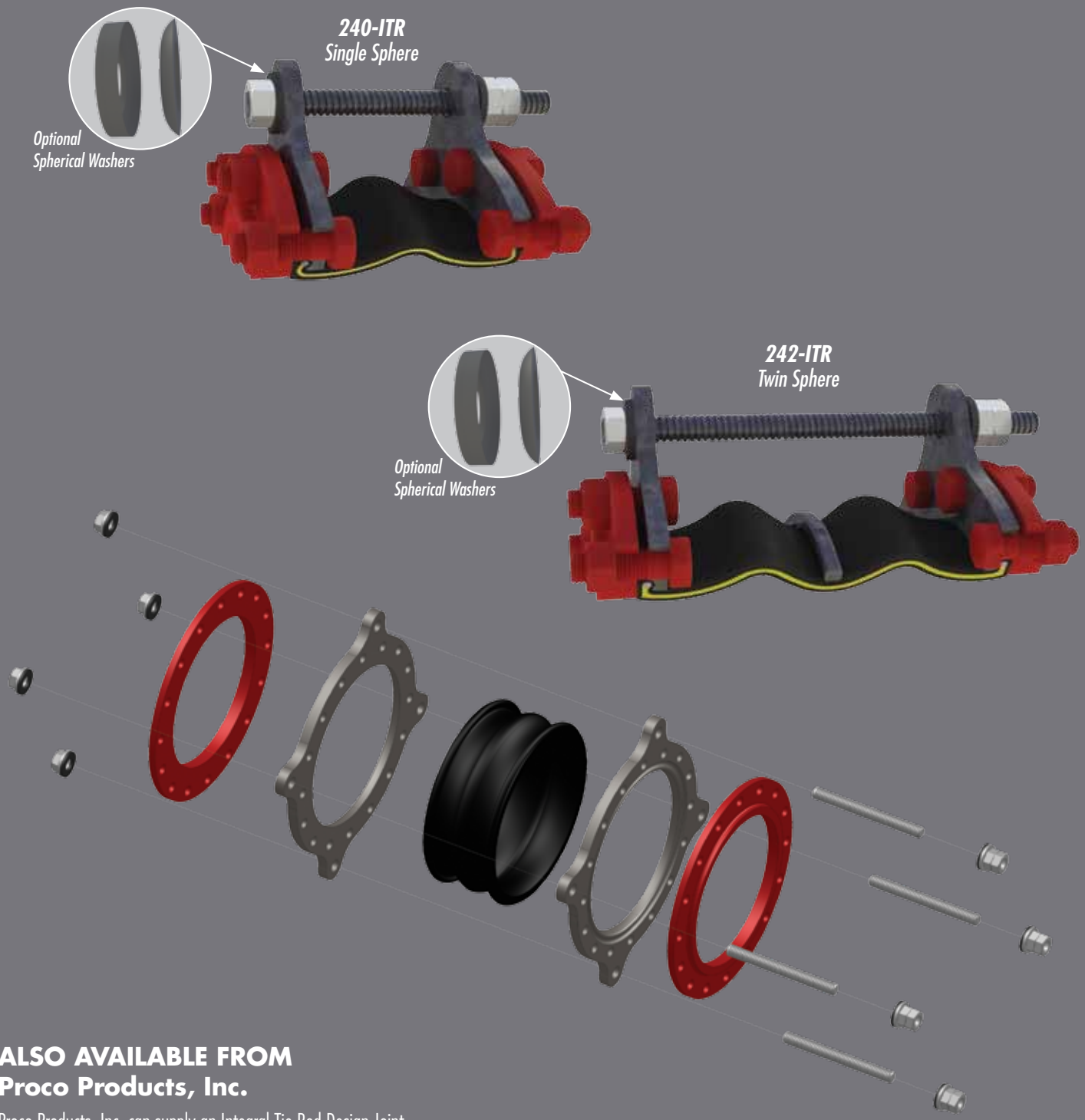

ALSO AVAILABLE FROM
Proco Products, Inc.

Proco Products, Inc. can supply an Integral Tie Rod Design Joint when space prohibits use of typical rod designs.

PROCO PRODUCTS, INC.

2431 North Wigwam Dr. (95205)
P.O. Box 590 • Stockton, CA
95201-0590 • USA

Toll-Free Phone: (800) 344-3246
Facsimile: (209) 943-0242
(209) 943-6088
email: sales@procoproducts.com
website: http://www.procoproducts.com

NATIONWIDE AND CANADA

INTERNATIONAL

American Water Works Association

IDCO Industrial Distributor Co-op

NAHAD Charter Listed Member — Safety · Quality · Reliability

Fluid Sealing Association FSA

Water Environment Federation® — Preserving & Enhancing the Global Water Environment — MEMBER

REPRESENTED BY:

Revised 3/11

CalgonCarbon	HOSE FITTINGS MATERIAL SPECIFICATION	SPEC NO:
	UNIVERSAL HOSE COUPLING - MALLEABLE IRON	32.40

SAP PART NUMBER:

CCC DRAWING NUMBER:

MATERIAL: Universal Hose Coupling, Malleable iron, male pipe thread on one end with other end for connecting to universal coupling.

RATING: 90 psig @ 140 DEG. F.

MANUFACTURER: Chicago Pneumatic, or equal.

SIZES:
1/4" - C-36844Y
3/8" - C-36843Y
1/2" - C-36842Y
3/4" - C-36841Y
1" - C-36840Y

NOTE: Above model number includes one standard type rubber gasket No. C-101158Y for air service. For water service use neoprene gasket No. C-101160Y.

Issue Date: Revision Date:

Approved by Joseph P. McMahon on 10/30/98

HOSE END

Ductile Iron (machined serrations)

hose size	part number	list each
3/8	UH-38	7.98
1/2	UH-2	4.99
5/8	UH-58	7.61
3/4	UH-3	5.15
1	UH-4	6.88

Brass (machined serrations)

3/8	UHB-38	–
1/2	UHB-2	12.60
5/8	UHB-58	–
3/4	UHB-3	14.49
1	UHB-4	18.59

316 Stainless (machined serrations)

1/2	UHSS-2	43.47
3/4	UHSS-3	36.71
1	UHSS-4	40.57

FEMALE NPT

Ductile Iron

npt size	part number	list each
3/8	UF-38	6.88
1/2	UF-2	6.30
3/4	UF-3	5.93
1	UF-4	7.72

Brass

3/8	UFB-38	–
1/2	UFB-2	–
3/4	UFB-3	–
1	UFB-4	–

316 Stainless

1/2	UFSS-2	44.71
3/4	UFSS-3	38.75
1	UFSS-4	41.73

MALE NPT

Ductile Iron

npt size	part number	list each
3/8	UM-38	6.88
1/2	UM-2	5.72
3/4	UM-3	6.09
1	UM-4	6.83

Brass

3/8	UMB-38	–
1/2	UMB-2	–
3/4	UMB-3	–
1	UMB-4	–

316 Stainless

1/2	UMSS-2	44.71
3/4	UMSS-3	38.75
1	UMSS-4	41.73

BLANK END

Ductile Iron

size	part number	list each
All	UB	9.82

Brass

All	UBB	–

THREE WAY

Ductile Iron

size	part number	list each
All	UTW	17.85

Brass

All	UTWB	–

UNIVERSAL WASHER

Nitrile

size	part number	list each
All	UG	0.53

Never use Universal Washers in UniversaLock Couplings

SAFETY CLIP

size	part number	list each
All	SC	0.26

TWO-BOLT UNIVERSAL CLAMP

Ductile Iron

hose o.d. min to max	part no.	list each
3/4 to 15/16	UC-2	5.78
1 to 1-1/4	UC-3	5.83
1-1/4 to 1-17/32	UC-4	10.08

DISTRIBUTOR AUTHORIZATION

Safety is of paramount concern to everyone. Due to the volatile nature of compressed air, and in accordance with our ISO 9000 quality system, we reserve the right to restrict sales of our UniversaLock® Couplings to only those distributors authorized by Campbell Fittings.

Please contact our customer service department for more information.

HOSE END

Ductile Iron (machined serrations)

hose size	part number	list each
1/2	ULH-2	19.10
3/4	ULH-3	19.10
1	ULH-4	19.10

MALE END

Ductile Iron

npt size	part number	list each
1/2	ULM-2	19.10
3/4	ULM-3	19.10
1	ULM-4	19.10

FEMALE END

Ductile Iron

npt size	part number	list each
1/2	ULF-2	19.10
3/4	ULF-3	19.10

UNIVERSALOCK WASHER

Nitrile

size	part number	list each
All	ULW	2.13

Never use UniversaLock Washers in standard Universal Couplings

CalgonCarbon	HOSE FITTINGS MATERIAL SPECIFICATION	SPEC NO:
	QUICK DISCONNECT MALE ADAPTER - ALUMINUM	32.60

SAP PART NUMBER:

CCC DRAWING NUMBER:

MATERIAL: Quick disconnect male adapter, Aluminum, male NPT on one end with other end for connecting to quick disconnect female coupler.

RATING: 150 psig @ 100 DEG. F.

MANUFACTURER: Dixon, Ever-Tite

SIZES: 1/2" thru 4"

MODELS: Dixon "Andrews" line, type F, Ever-Tite Part F, or equal.

Issue Date: 04/16/90 Revision Date: 09/15/99

Approved by Matthew R. McGowan on 09/27/99

"EZ BOSS-LOCK"

No more fumbling with clamps, wire, clips or pins . .
Just close the handles and the locking mechanism is engaged.

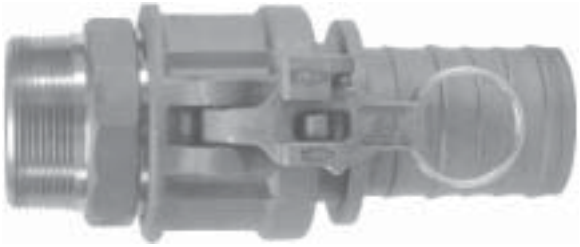

Unlike other safety couplings . . .

- **The EZ Boss-Lock is extremely EASY TO OPEN!!!** *The release lever is under your thumb when you want to open the fitting.* **ERGONOMIC.**
- **The EZ Boss-Lock is resistant to accidental disconnection when being dragged.** *The release lever opens in the direction opposite to the cam arm, so movements that tend to open the release lever also tend to close the cam arm!!!*
- **The EZ Boss-Lock alerts you if it is not properly engaged.** *If the rotating lever is not flush with the handle, it is not properly engaged.*
- **The EZ Boss-Lock has no sliding pins to jam**. *The EZ Boss-Lock's rotating action helps keep the locking device free of debris.*
- **The EZ Boss-Lock has no sliding pins to pop open.** *The EZ Boss-Lock is designed to protect critical parts from impact and to withstand rugged use.*
- **The EZ Boss-Lock can be supplied with special shanks custom suited to your needs.** *The EZ Boss-Lock is available with Swaged and PF shank designs, for hard to couple chemical hoses.*
- **The EZ Boss-Lock cam arm assemblies are made of investment cast Stainless Steel with plated Carbon Steel pull rings.**
- **The EZ Boss-Lock is easier to insert into the hose tubes on Tank Trucks, and easier to use in restricted spaces.** *This is due to the smaller maximum O.D. and a more snag free exterior.*
- **The EZ Boss-Lock Cam Arm assemblies can be retrofitted onto Undamaged Stainless Steel Boss-Lock.** *This allows you to protect your investment in Stainless Steel Boss-Lock couplings while you upgrade.*
- **The EZ Boss-Lock is Made in the USA.**

All measurements in this brochure are for reference only and are subject to change. Where dimensions are critical, please consult the factory. For products not shown or special application questions, please consult the factory.

CAM & GROOVE LINE DRAWINGS

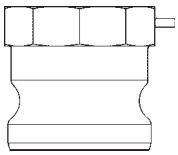

TYPE A
(male adapter x female NPT)

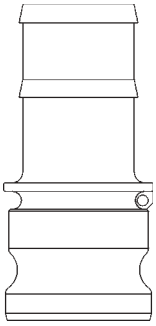

TYPE E
(male adapter x hose shank)

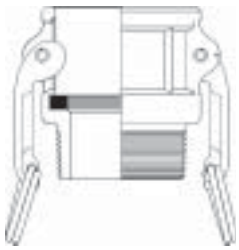

TYPE B
(female coupler x male NPT)

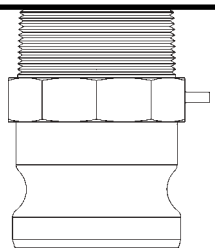

TYPE F
(male adapter x male NPT)

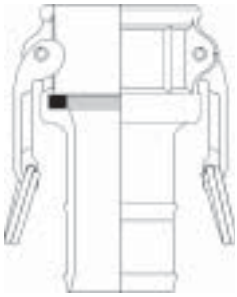

TYPE C
(female coupler x hose shank)

TYPE DC *
(dust cap)

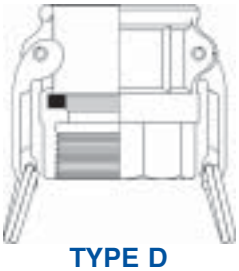

TYPE D
(female coupler x female NPT)

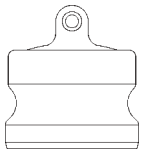

TYPE DP *
(dust plug)

NOTE: Line drawings are representative of the Dixon / "Andrews" line of cam and groove.

** Dust Caps and Dust Plugs are NOT to be used in Pressure Applications for safety and environmental reasons.*

WARNING:
SAFETY ALERT
UNDER NO CIRCUMSTANCES should Cam and Groove couplings be used for compressed air or steam service!

6 Dixon "Andrews" / "Boss-Lock" Type F Adapters

Male Adapter x Male NPT

Size	Aluminum Part #	Aluminum Hard Coat Part #	Brass Part #	Unplated Malleable Iron Part #	Plated Malleable Iron Part #	Stainless Steel Part #
1/2"	***50-F-AL***	***----***	***50-F-BR***	***----***	***----***	***50-F-SS***
3/4" x 1/2"	***7550-F-AL***	***----***	***7550-F-BR***	***----***	***----***	***7550-F-SS***
3/4"	***75-F-AL***	***----***	***75-F-BR***	***----***	***75-F-PM***	***75-F-SS***
1"	***100-F-AL***	***----***	***100-F-BR***	***----***	***100-F-PM***	***100-F-SS***
1 1/4"	***125-F-AL***	***----***	***125-F-BR***	***----***	***----***	***125-F-SS***
1 1/2"	***150-F-AL***	***150-F-ALH***	***150-F-BR***	***150-F-MI***	***150-F-PM***	***150-F-SS***
2"	***200-F-AL***	***200-F-ALH***	***200-F-BR***	***200-F-MI***	***200-F-PM***	***200-F-SS***
2 1/2"	***250-F-AL***	***----***	***250-F-BR***	***----***	***250-F-PM***	***250-F-SS***
3"	***300-F-AL***	***300-F-ALH***	***300-F-BR***	***300-F-MI***	***300-F-PM***	***300-F-SS***
4"	***400-F-AL***	***400-F-ALH***	***400-F-BR***	***400-F-MI***	***400-F-PM***	***400-F-SS***
5"	***500-F-AL***	***----***	***----***	***----***	***----***	***----***
6"	***600-F-AL***	***600-F-ALH***	***600-F-BR***	***----***	***600-F-PM***	***600-F-SS***
8" AND*	***800-F-AL***	***----***	***----***	***----***	***----***	***----***
8" BL*	***801-F-AL***	***----***	***----***	***----***	***----***	***----***

* "Andrews" and "Boss-Lock" Cam and Groove Couplings **DO NOT INTERCHANGE IN THE 8" SIZE.**

SAFETY ALERT

- The 8" "Boss-Lock" were designed to interchange with 8" Cam & Groove Couplings manufactured by P.T. Coupling.

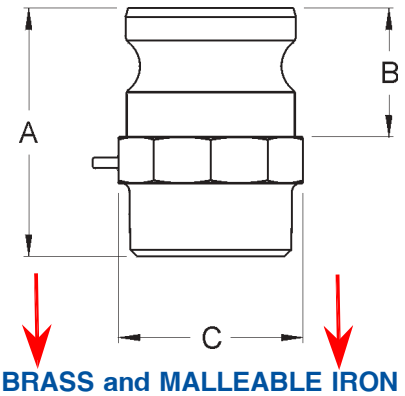

ALUMINUM, BRASS and MALLEABLE IRON DIMENSIONS

Size	1/2"	3/4 x 1/2"	3/4"	1"	1 1/4"	1 1/2"	2"	2 1/2"	3"	4"	5"	6"	8" AND	8" BL
A Overall Length	2 1/8	2 7/16	2 1/16	2 3/8	2 15/16	3 5/32	3 17/32	4 3/8	4 15/32	4 21/32	4 1/2	5 17/32	6 15/16	6 3/8
B Adapter Length	1	1	1	1 5/16	1 9/16	1 5/8	1 7/8	1 15/16	2	2 1/16	2 5/16	2 1/4	3 9/16	3 1/16
C Distance Across Flats	1	1 5/16	1 3/8	1 1/2	1 7/8	2 1/4	2 11/16	3 1/4	3 3/4	5	6 1/2*	8 1/32*	10 5/8*	10 5/8*

STAINLESS STEEL DIMENSIONS

Size	1/2"	3/4 x 1/2"	3/4"	1"	1 1/4"	1 1/2"	2"	2 1/2"	3"	4"	5"	6"	8" AND	8" BL
A Overall Length	2 1/8	2 1/4	2 1/16	2 23/32	2 15/16	3 1/8	3 21/32	4 5/16	4 17/32	4 59/64	------	4 15/16	------	------
B Adapter Length	1	1	1	1 5/16	1 9/16	1 5/8	1 7/8	1 15/16	2	2 1/16	------	2 1/4	------	------
C Distance Across Flats	1	1 5/16	1 5/16	1 1/2	1 7/8	2 1/4	2 11/16	3 1/4	3 3/4	5	------	7 3/4*	------	------

* Distance Over Lugs

CalgonCarbon	CARBON STEEL PIPE MATERIAL SPECIFICATION	SPEC NO:
	CARBON STEEL PIPE WITH STEEL FITTINGS	C02

SAP PART NUMBER:

CCC DRAWING NUMBER:

MATERIAL:
Carbon steel pipe with steel fittings

RATING:
125 PSIG @ 350 DEG. F, 200 PSIG @ 150 DEG. F, Includes corrosion allowance of 0.050" min.

CONSTRUCTION:
Screwed for 1 1/2" and smaller, welded and/or flanged for 2" and larger.

PIPE:
Carbon steel, ASTM A53, Grade B: Threaded, schedule 80, seamless, 1 1/2" and smaller, plain end, schedule 40, seamless, 2" to 10", Plain end, 3/8" wall, seamless, 12" and above.

FITTINGS:
3000 lb ANSI B16.11, forged steel, threaded ends, 1 1/2" and smaller. Schedule 40, ANSI B16.9, ASTM A234, Grade WPB, carbon steel, butt welding ends, 2"-12". 3/8" wall, ANSI B16.9, ASTM A234, Grade WPB, carbon steel, butt welding ends, 14" to 24", or 125# flanged cast iron elbows and tees, ASTM A126, Class B with 125# ANSI B16.1 drilling with dimensions per ANSI A21.10 (AWWA C110). Location of tapped holes for drains shall be in accordance with ANSI B16.1. Use thread-o-lets on branch connections 1-1/2" and smaller, use stub-in or reducing tee connections for 2" and above.

UNIONS:
3000 lb forged steel, ASTM A105, Grade 2, integral steel seat, ground joint, threaded ends.

FLANGES:
150 lb ANSI B16.5, ASTM A105 forged carbon steel, slip-on, weld neck, or MSS lap joint/stub end for 2" and larger, threaded 1 1/2" and smaller. Where bolting to flat face cast iron flanges, flanges shall be furnished with a flat face. Others shall be raised face.

Issue Date: 12/01/89 Revision Date: 03/25/2008

Approved by Joseph P. McMahon on 03/25/2008

CalgonCarbon	CARBON STEEL PIPE MATERIAL SPECIFICATION	SPEC NO:
	GALVANIZED CARBON STEEL PIPE	C13

SAP PART NUMBER:

CCC DRAWING NUMBER:

MATERIAL: Galvanized carbon steel pipe with galvanized iron or steel fittings.

RATING: 275 PSIG @ -20 to 150 DEG. F
215 PSIG @ 350 DEG. F Includes corrosion allowance of 0.050" minimum.

CONSTRUCTION: Screwed 3" and smaller
No bending permitted

PIPE: Galvanized carbon steel, ASTM A53:
Threaded, schedule 40, butt welded seam 2" and smaller.
Threaded schedule 40, butt welded seam or seamless, 2 1/2" and 3".

FITTINGS: 150 lb., ANSI B16.3, ASTM A197, galvanized malleable iron, banded, threaded ends.

UNIONS: 150 LB., ASTM A197, galvanized malleable iron, integral iron seat, ground joint, threaded ends.

FLANGES: 150 lb., ANSI B16.5, ASTM A105, Grade 1, galvanized forged carbon steel, threaded.

Where bolting to flat face cast iron flanges, steel flanges shall be furnished with a flat face. Others shall be raised face

ORIFICE FLANGES: Instrument item.

BOLTING: See attached Fastener Specification F03.

GASKETS: See attached Gasket Specification G02.

Issue Date: 12/01/89 Revision Date: 04/10/92

Approved by Gerald Kirner on 11/09/2005

CalgonCarbon	FASTENER MATERIAL SPECIFICATION	SPEC NO:
		F03

SAP PART NUMBER:

CCC DRAWING NUMBER:

MATERIAL:
Hex Bolt, low or medium carbon steel, ASTM A307 Grade B.
1/4" through 4" Proof load 55,000 psi.
1/4" through 4" Tensile strength: 60,000 psi minimum, 100,000 psi maximum.
Zinc plated.
Threads to be UNC unless specified UNF bolts to include (1) heavy hex nut, ASTM A563, Grade A.

Issue Date: 01/01/89 Revision Date: 07/16/2001

Approved by Matthew R. McGowan on 07/16/2001

CalgonCarbon	GASKET MATERIAL SPECIFICATION	SPEC NO:
	1/8" EPDM RUBBER	G-45

SAP PART NUMBER:

CCC DRAWING NUMBER:

MATERIAL: EPDM, Color: Black, 1/8" thick.

RATING: Durometer (Shore A +/- 5): 60

MANUFACTURER: Garlock or equal.

SIZES: Pipe gasket flange dimension per ANSI B16.21

MODELS: Garlock- 8314 or equal.

SERVICE CONDITIONS:
Temperature: -40 thru 300 degrees F. Pressure: 250 psig

Issue Date: 03/12/2008 Revision Date: 03/12/2008

Approved by Joseph P. McMahon on 03/12/2008

CalgonCarbon	PRESSURE INDICATING GAGES MATERIAL SPECIFICATION	SPEC NO:
	PI-213 TO PI-218; PI-448 TO PI-560	IS008

SAP PART NUMBER:

CCC DRAWING NUMBER:

MATERIAL: As listed below:

Case:	4-1/2" size, stainless steel, steel, brass, aluminum and phenol.
Socket:	1/2" NPT male bottom connection, stainless steel.
Dial:	White litho with black figures.
Pointer:	Balanced micrometer.
Bourdon Tube:	Stainless steel.
Movement:	Stainless steel and Delrin.
Accuracy:	1% of full range.
Liquid Fill:	None

RATING: Temperature range of -4 DEG. F. to +150 DEG. F.

MANUFACTURER: Ashcroft, WIKA

MODELS: Ashcroft "Duragauge" - 1279, WIKA 232.34

NOTES: As listed below:

1. Spec. IS008 replaces Spec. No. 7209A-CS263
2. This specification replaces the Specs. listed below.

RANGE: As listed below:

ITEM NO.	SCALE RANGE	REPLACES THESE ITEMS	
PI-213	0-15 PSIG	PI-101,7	SPEC. No. 7209A-CS161,2 (IS001,2)
PI-214	0-30 PSIG	PI-102,8	SPEC. No. 7209A-CS161,2 (IS001,2)
PI-215	0-60 PSIG	PI-103,9	SPEC. No. 7209A-CS161,2 (IS001,2)
PI-216	0-100 PSIG	PI-104,10	SPEC. No. 7209A-CS161,2 (IS001,2)
PI-217	0-160 PSIG	PI-105,11	SPEC. No. 7209A-CS161,2 (IS001,2)
PI-218	0-200 PSIG	PI-106,12	SPEC. No. 7209A-CS161,2 (IS001,2)
PI-448	0-300 PSIG		
PI-557	0-300 PSIG *		
PI-449	0-400 PSIG		
PI-556	0-400 PSIG *		
PI-450	0-800 PSIG		
PI-558	0-800 PSIG *		
PI-559	0-1500 PSIG		
PI-560	0-1500 PSIG *		*With Steam Coil Siphon

GENERAL REQUIREMENTS:

Tag each assembly with Item No. and Service.

Issue Date: 01/01/89 Revision Date: 12/16/2005

Approved by Gerald Kirner on 03/21/2006

Bourdon Tube Pressure Gauges
Solid-Front Process Gauge - SS Wetted Parts
Type 232.34 - Dry Case
Type 233.34 - Liquid-filled Case

Applications

- For applications with high dynamic pressure pulsations or vibration a liquid filled case and socket restrictor are available
- Suitable for corrosive environments and gaseous or liquid media that will not obstruct the pressure system
- Process industry: chemical/petrochemical, power stations, mining, on and offshore, environmental technology, mechanical engineering and plant construction

Special features

- Excellent load-cycle stability and shock resistance
- Solid front thermoplastic case
- Positive pressure ranges to 30,000 psi
- All lower mount connection gauges are factory prepared for liquid filling

(LBM: must install membrane prior to field filling)

Bourdon Tube Pressure Gauge Model 232.34

Standard Features

Design
ASME B40.100

Sizes
4½" & 6" (115 & 160 mm) dial size

Accuracy class
± 0.5% of span (ASME B40.100 Grade 2A)
± 1.0% of span (ASME B40.100 Grade 1A)
(for 20,000 psi range and above)

Ranges
Vacuum / Compound to 200 psi
Pressure from 15 psi to 30,000 psi
or other equivalent units of pressure or vacuum

Working pressure

Steady:	full scale value
Fluctuating:	0.9 x full scale value
Short time:	1.5 x full scale value

Operating temperature
Ambient: -40°F to +150°F (-40°C to +66°C) - dry
-4°F to +150°F (-20°C to +66°C) - glycerine filled
-40°F to +150°F (-40°C to +66°C) - silicone filled
Medium: max. +212°F (+100°C) (See Note 1 on reverse)

Temperature error
Additional error when temperature changes from reference temperature of 68°F (20°C) ±0.4% for every 18°F (10°C) rising or falling. Percentage of span.

Weather protection
Weather resistant (NEMA 3 / IP54) - without membrane
Weather tight (NEMA 4X / IP65) - dry case or filled case with membrane installed

Pressure connection
Material: 316L stainless steel
Lower mount (LM) or lower back mount (LBM)
1/4" or 1/2" NPT with M4 internal tap

Restrictor
Material: Stainless steel (0.6 mm)

Bourdon tube
Material: 316L stainless steel
≤ 1,000 PSI: C-type
≥ 1,500 PSI: helical type

Movement
Stainless steel. Internal stop pin at 1.3 x full scale
Overload and underload stops - standard
Dampened movement - optional

Dial
White aluminum with black lettering, stop pin at 6 o'clock

Pointer
Black aluminum, adjustable

Case
Black fiberglass-reinforced thermoplastic (POCAN)
Solid front, blowout back
Turret-style case with built in rear flange lugs

WIKA
Part of your business

Window
Clear acrylic with Buna-N gasket

~~Case filling~~
~~Glycerine 99.7% - Type 233.34~~

Cycle testing
400,000 - 2,000,000* cycles, depending upon pressure range

* Liquid filled

Note 1: The maximum continuous media temperature for this gauge is 212°F. However, higher temperatures can be maintained safely for short term exposure per table to the right. The user should consider temperature error and gauge component degradation when exposing gauge to any media or ambient temperature above 212°F. For continuous use in either ambient or media temperatures above 212°F, a diaphragm seal or other heat dissipating means is recommended. Consult factory for technical inquiries and application assistance.

~~Optional extras~~

- ~~Silicone dampened movement~~
- ~~Panel mounting adaptor kit (field assembled)~~
- ~~Silicone case filling~~
- ~~Halocarbon case filling~~
- ~~Cleaned for oxygen service~~
- ~~Instrument glass or safety glass window~~
- ~~Drag pointer (maximum reading indicator)~~
- ~~Alarm contacts switches (magnetic or inductive)~~
- ~~Special process connections~~
- ~~Custom dial layout~~
- ~~External zero adjustment~~

Short term, intermittent maximum media temperature limits
(Optional glass window required for all these temperatures)

500°F (260 °C) -	Dry Gauge
250°F (130°C) -	Liquid filled gauge
300°F (150°C) -	Dampened movement gauge

Dimensions

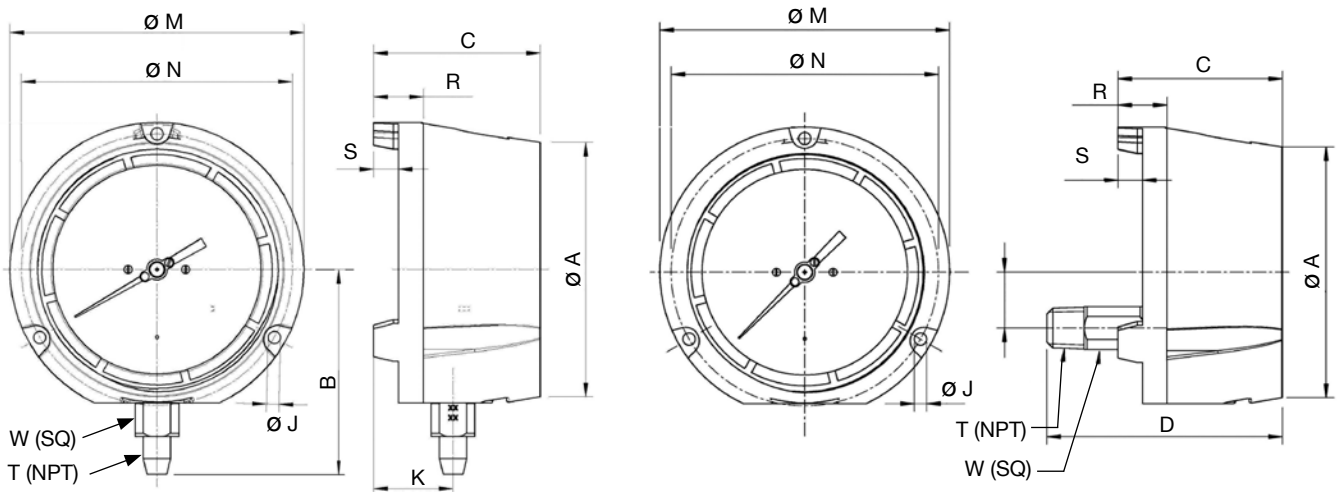

Size		A	B	C	D	J	K	L	M	N	R	S	T	W	Weight[1]	
4.5”	mm	128	103	84	120.3	6.3	40	28.5	148	136.5	25	12.5		22	2 lb.	dry
	in	5	4.06	3.31	4.74	0.248	1.57	1.12	5.83	5.37	0.99	0.49	1/2”	0.87	3 lb.	filled
6”	mm	164	122.5	88	123.4	7.1	40.2	28.5	190	177.8	25.4	12.7		22	3 lb.	dry
	in	6.46	4.82	3.46	4.86	0.28	1.58	1.12	7.5	7	1	0.5	1/2”	0.87	4 lb.	filled

[1] Weight without optional accessories

Ordering information
Pressure gauge model / Nominal size / Scale range / Size of connection / Optional extras required
Specifications and dimensions given in this leaflet represent the state of engineering at the time of printing.
Modifications may take place and materials specified may be replaced by others without prior notice.

WIKA Instrument Corporation
1000 Wiegand Boulevard
Lawrenceville, GA 30043
Tel (770) 513-8200 Toll-free 1-888-WIKA-USA
Fax (770) 338-5118
E-Mail info@wika.com
www.wika.com

CalgonCarbon	RUPTURE DISKS MATERIAL SPECIFICATION	SPEC NO:
	PSE-155 TO PSE-157;PSE-252;PSE-301 TO PSE-306;PSE-577;PSE-580	IS015

SAP PART NUMBER:

CCC DRAWING NUMBER:

MATERIAL: Impervious graphite.

Type: Standard.
Vacuum Support: Furnish for disks with bursting pressure of 15 psig or less.

FLANGES: 150 # ANSI RF or FF companion flanges (furnished by others)

MANUFACTURER: Zook, BS&B or equal.

SIZES: As listed below:

ITEM NO.	SIZE	BURSTING PRESSURE
PSE-155	1"	75 PSIG +/- 5%
PSE-156	1-1/2"	75 PSIG +/- 5%
PSE-157	2"	75 PSIG +/- 5%
PSE-170	2"	125 PSIG +/- 5%
PSE-252	3"	75 PSIG +/- 5%
PSE-301	3"	35 PSIG +/- 5%
PSE-302	3"	50 PSIG +/- 5%
PSE-303	3"	65 PSIG +/- 5%
PSE-304	3"	87 PSIG +/- 5%
PSE-305	3"	150 PSIG +/- 5%
PSE-306	3"	75 PSIG +/- 5%
PSE-307	3"	100 PSIG +/- 5%
PSE-577	3"	125 PSIG +/- 5%
PSE-580	4"	125 PSIG +/- 5%

MODELS: Zook - Mono Type Disk, BS&B - Monobloc Model MB or equal

SPECIFICATIONS: ASME UD stamp required.

NOTES: As listed below:

1 - Tag with Item No. and Service.
2 - IS015 replaces Spec. No. 7209a-CS172

SERVICE CONDITIONS:
As listed below:

Fluid Under Disks:	Water
Pressure Fluctuation:	Back Pressure:
Temperature:	40 to 150 degrees F.
Operating Pressure:	80% of bursting pressure.
Back Pressure:	Atmospheric.

GENERAL REQUIREMENTS:
As listed Below:

Bursting Pressure:	See table above
Coincident Temperature:	150 degrees F.
Relieving Capacity:	In accordance with ASME

Issue Date: 04/06/90 Revision Date: 08/15/2012

Approved by Joseph P. McMahon on 08/15/2012

BS&B®

CCC SPEC. IS015
PSE-577

SAF-T-GRAF™

GRAPHITE RUPTURE DISKS

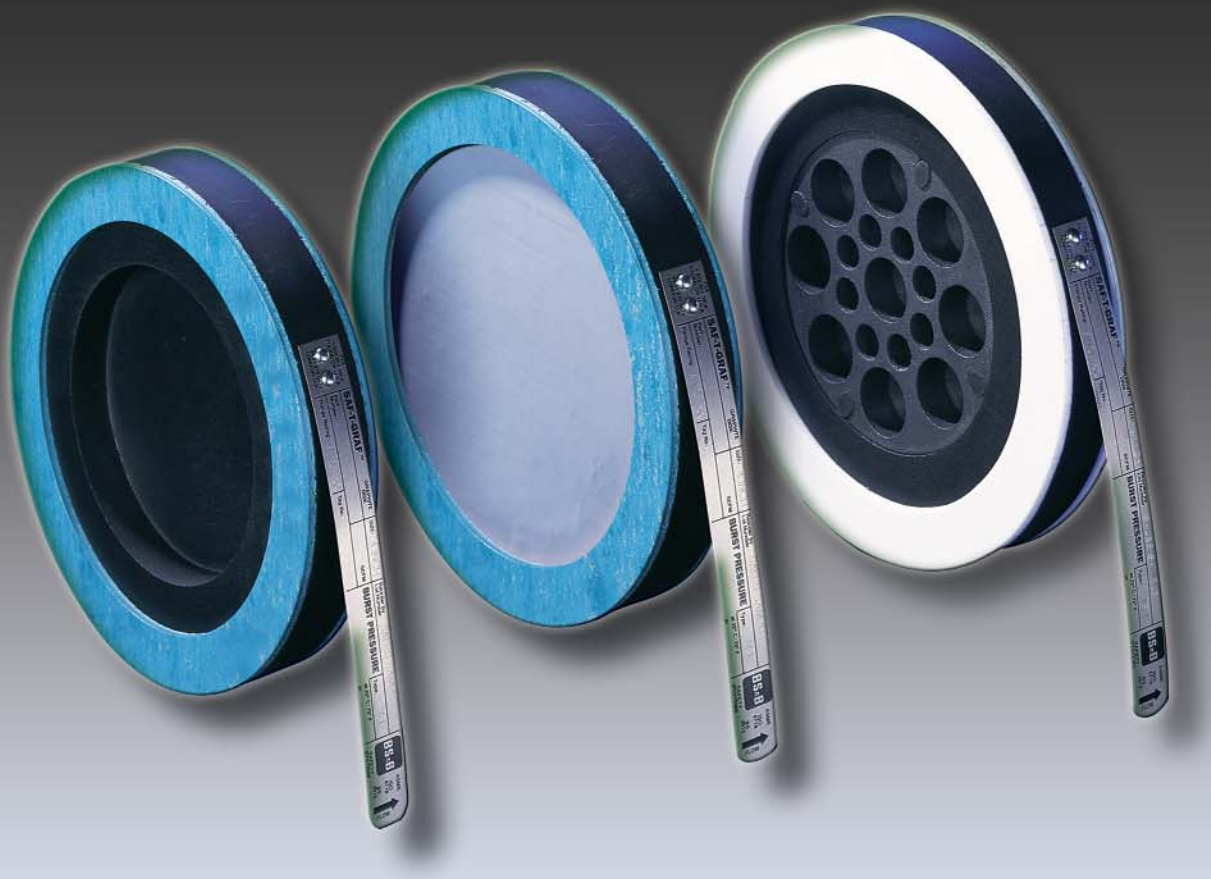

CE UD ISO 9001

Visit www.BSBsystems.com or www.BSB.ie
for the most up-to-date information

SAF-T-GRAF® System

Introduction

Saf-T-Graf® graphite Rupture Disks are manufactured from a single piece of high quality graphite that is impregnated with an environmentally safe high temperature resin to provide excellent leak performance. All Saf-T-Graf disks may be applied in gas, liquid or two phase flow. At the heart of the Saf-T-Graf product is its Monobloc construction; the rupture disk and holder are integral, designed for simple installation between companion flanges with no potential for leakage between separate disk and holder components. Depending upon the application, different models of Saf-T-Graf Monobloc disks are available; their performance is described in the Performance Features table below:

Performance Features

	MB	IMB	FSM	AMB	AIMB	AFSM
Armored	-	-	-	Yes	Yes	Yes
Fail Safe	-	-	Yes	-	-	Yes
Vacuum Resistant	≥ 22psi ≥ 1.52bar	≥ 22psi ≥ 1.52bar	≥ 22psi ≥ 1.52bar	≥ 22psi ≥ 1.52bar	≥ 22psi ≥ 1.52bar	≥ 22psi ≥ 1.52bar
Vacuum Support Option	Type MBV Disk	-	-	Type AMBV Disk	-	-
Fitted Gaskets	Yes	Yes	Yes	Yes	Yes	Yes
Standard Temperature Range	-100°F~+400°F -73°C~+205°C	-100°F~+400°F -73°C~+205°C	-100°F~+400°F -73°C~+205°C	-100°F~+400°F -73°C~+205°C	-100°F~+400°F -73°C~+205°C	-100°F~+400°F -73°C~+205°C
High Temperature Service	-	-	-	Type AMB-HTA Disk≤800°F/ 427°C	Type AIMB-HTA Disk≤800°F 427°C	-
Tef Liner	-	Type IMBL Disk	-	-	Type AIMBL Disk	-
Sizes Available	0.5" to 24" 15~600mm	0.5" to 24" 15~600mm	0.5" to 24" 15~600mm	0.5" to 24" 15~600mm	0.5" to 24" 15~600mm	0.5" to 24" 15~600mm
ASME "UD" Stamped	Yes	Yes	No	Yes	Yes	No
"CE" Marked	Yes	Yes	No	Yes	Yes	No
ISO 4126-2 Burst Test Certificate	Yes	Yes	Yes	Yes	Yes	Yes

Armoring

Armor is recommended for all graphite disks for added safety, easier installation and elimination of breakage during installation. Armor reduces the possibility of a premature burst due to uneven or excessive torqueing of the flange studs. Armor is standard on disks with burst pressures in excess of 150 psig or to fit ANSI Class 300/600 flanges. Carbon steel armor is standard with 304/316 stainless steel as an option. BS&B recommends armor for the sizes and burst pressures in the excess of the following :

SIZE		BURST PRESSURE	
INCHES	MILLIMETERS	PSIG	BARG
0.5 - 3	15 - 80	150	10.341
4	100	100	6.894
6 - 10	150 - 250	75	5.17
12 - 24	300 - 600	50	3.447

Burst Alert Sensor

A GAS™ (Graphite Alert Sensor) is available to provide warning of a burst graphite disk

Operating Ratio

Extended service life for operating pressures up to 80% of the disk marked pressure in a static environment - Lower operating ratios can be expected in a cyclic environment.

Expedited Delivery

The following standard 150 ANSI MB sizes and burst pressures are available for quick delivery: 1", 1.5", 2", 3", 4", 6", 8" (25, 40, 50, 80, 100, 150 and 200 mm).

Stocked Burst Pressures:
10-15-20-25-30-40-50-75-100-125-150 psig

Companion Flange Rating

Saf-T-Graf Monobloc rupture disks are supplied for installation between companion flanges of all international standards including ANSI/ASME, EU/DIN/AFNOR, and JIS. The flange standard and its pressure rating must be identified at the time of order.

Gaskets

Standard gasket material for all Saf-T-Graf Monobloc disks is Klinger-Sil® C-4401. Optional materials include PTFE Solid, Neoprene, Garlock® 3000, Grafoil® and Gylon® 3510. Gaskets are always supplied fitted to Saf-T-Graf Monobloc disks – ready to use!

Monobloc

Model MBV (with bar) and MB.

Model MB™, MBV™, AMB™, AMBV™

Monobloc disks fit most applications where graphite disks are needed.

When using a monobloc disk in application:

- Vacuum supports are needed for disks rated below 22 psig (1.52 bar) and where a vacuum condition exists. Model MBV or AMBV Vacuum supports are not required on 0.5" and 0.75" (15mm and 20mm) monobloc disks
- Temperature ranges -100ºF to 400ºF (-73ºC to 205ºC).

MB

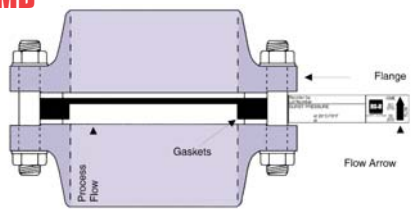

Sizes 0.5" to 24" (15mm to 600 mm)with temperature range to 400ºF (205º C).

MB™, MBV™, AMB™, AMBV™ Specifications

Nominal Size		Burst Ratings PSIG		Burst Ratings Barg		Disk Thickness		ANSI Flange Rating	DIN
in	mm	Min	Max	Min	Max	in	mm		
0.5	15	25	150	1.73	10.3	0.625	16	150	10/16
0.75	20	25	150	1.73	10.3	0.625	16	150	10/16
1	25	10	150	0.69	10.3	0.875	22	150	10/16
1.5	40	7	150	0.49	10.3	0.875	22	150	10/16
2	50	2	150	0.14	10.3	0.875	22	150	10/16
3	80	1	150	0.069	10.3	0.875	22	150	10/16
4	100	1	150	0.069	10.3	0.875	22	150	10/16
6	150	1	150	0.069	10.3	0.875	22	150	10/16
8	200	0.5	150	0.035	10.3	1.125	29	150	10/16
10	250	0.25	125	0.0173	8.6	1.50	38	150	10/16
12	300	0.25	125	0.0173	8.6	2.00	51	150	10/16
14	350	0.25	100	0.0173	6.89	2.25	57	150	10/16
16	400	0.25	100	0.0173	6.89	2.50	64	150	10/16
18	450	0.25	100	0.0173	6.89	2.75	70	150	10/16
20	500	0.25	50	0.0173	3.4	3.00	76	150	10/16
24	600	0.25	50	0.0173	3.4	3.00	76	150	10/16

Contact BS&B for special disk thickness.

Fail-Saf Monobloc - *FSM™*
Inverted Monobloc - *IMB™*
Inverted Monobloc with Liner - *IMBL™*

Fail-Saf Monobloc - FSM

The most impressive feature of the FSM is its "fail-safe" design, which allows the disk to burst at the precise marked burst pressure from either side. It cannot be installed upside down between pipe flanges, which greatly reduces installation errors.

Inverted Monobloc-IMB Inverted Monobloc with Liner - IMBL

IMB and IMBL disks are available to fit ANSI Class 150, Class 300 and Class 600 flanges. The IMBL extends corrosion resistance and resists product build-up with the use of a Fluoropolymer liner. Liner temperature, 500ºF (260ºC)

- If a vacuum support is required, Model MBV™ or AMBV™ disks must be specified; with Fluoropolymer coating if required.
- Temperature ranges -100ºF to 400ºF (-73ºC to 205ºC).

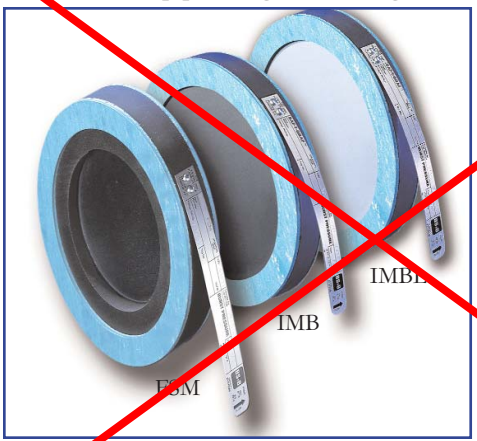

FSM™, IMB™, AIMB™, IMBL™, AIMBL™ Specifications

Nominal Size		Burst Ratings PSIG		Burst Ratings Barg		Disk Thickness		ANSI Flange Rating	DIN
in	mm	Min	Max	Min	Max	in	mm		
0.5	15	25	250	1.73	17.2	0.625	16	150	10/16
0.75	20	25	250	1.73	17.2	0.625	16	150	10/16
1	25	10	250	0.69	17.2	0.875	22	150	10/16
1.5	40	7	250	0.49	17.2	0.875	22	150	10/16
2	50	3	250	0.21	17.2	0.875	22	150	10/16
3	80	2	250	0.14	17.2	0.875	22	150	10/16
4	100	1.5	250	0.103	17.2	0.875	22	150	10/16
6	150	1	170	0.069	11.7	0.875	22	150	10/16
8	200	0.5	170	0.035	11.7	1.125	29	150	10/16
10	250	0.25	150	0.0173	10.3	1.50	38	150	10/16
12	300	0.25	150	0.0173	10.3	2.00	51	150	10/16
14	350	0.25	150	0.0173	10.3	2.25	57	150	10/16
16	400	0.25	150	0.0173	10.3	2.50	64	150	10/16
18	450	0.25	150	0.0173	10.3	2.75	70	150	10/16
20	500	0.25	150	0.0173	10.3	3.00	76	150	10/16
24	600	0.25	150	0.0173	10.3	3.00	76	150	10/16
0.5	15	25	1000	1.73	68.9	0.625	16	300/600	25/40
0.75	20	25	1000	1.73	68.9	0.625	16	300/600	25/40
1	25	10	1000	0.69	68.9	1.00	25	300/600	25/40
1.5	40	7	1000	0.49	68.9	1.00	25	300/600	25/40
2	50	3	500	0.21	34.4	1.00	25	300/600	25/40
3	80	2	500	0.14	34.4	1.25	32	300	25/40
4	100	1.5	500	0.10	34.4	1.25	32	300	25/40
6	150	1	450	0.069	31	1.75	44	300	25/40
8	200	0.5	450	0.035	31	2.25	57	300	25/40

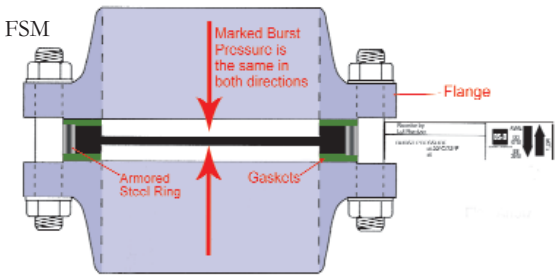

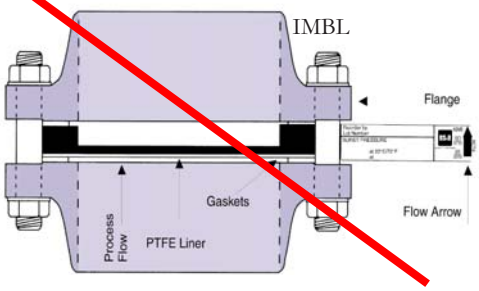

Venting Capacities

Venting capacities are expressed below in standard cubic feet per minute of air x 1000 at standard conditions. Adjustments must be made when utilizing vacuum supports.

Vacuum Example: An 8" Monobloc disk @ 10 psig utilizing a bar type of vacuum support, reduces the original capacity by a factor of .80 . Example: 19.5 x .80 = 15.6 x 1000 SCFM air

Venting capacities are based upon ASME VIII UG 131, using a 0.62 coefficient of discharge*, ratio of specific heats of 1.4 and a "Z" (compressibility) of 1.0 which simulates an entry into a vent system from a process vessel. Below 15 psig the flow becomes subcritical and appropriate corrections have been made to the venting capacities (calculated according to API guidelines).

Alternately, the low K_R values for graphite disks can be used for the determination of vent system capacity. This may permit the use of a smaller size of graphite disk.

Disk Diameter (in/mm)

Burst Rating psig	1/2	15	3/4	20	1	25	1.5	40	2	50	3	80	4	100	6	150	8	200	10	250	12	300	14	350	16	400	18	450	20	500	24	600
1/4	-		-		-		-		-		-		-		-		-		3.71		5.34		7.26		9.49		12.0		14.8		21.3	
1/2	-		-		-		-		-		-		-		-		3.35		5.24		7.54		10.3		13.4		16.9		20.9		30.2	
1	-		-		-		-		-		0.666		1.18		2.66		4.73		7.40		10.7		14.5		18.9		24.0		29.6		42.6	
1 1/2	-		-		-		-		-		0.814		1.45		3.26		5.79		9.05		13.0		17.7		23.2		29.3		36.2		52.1	
2	-		-		-		-		0.417		0.939		1.67		3.76		6.68		10.4		15.0		20.4		26.7		33.8		41.7		60.1	
3	-		-		-		-		0.510		1.15		2.04		4.59		8.15		12.7		18.3		24.9		32.6		41.3		50.9		73.4	
4	-		-		-		-		0.587		1.32		2.35		5.28		9.39		14.7		21.1		28.8		37.6		47.5		58.7		84.5	
5	-		-		-		-		0.655		1.47		2.62		5.89		10.5		16.4		23.6		32.0		41.9		53.0		65.5		94.3	
6	-		-		-		-		0.715		1.61		2.86		6.44		11.4		17.9		25.7		35.0		45.8		57.9		71.5		103	
7	-		-		-		0.433		0.771		1.73		3.08		6.93		12.3		19.3		27.7		37.8		49.3		62.4		77.0		111	
8	-		-		-		0.462		0.822		1.85		3.29		7.39		13.1		20.5		29.6		40.3		52.6		66.6		82.2		118	
9	-		-		-		0.489		0.869		1.96		3.48		7.82		13.9		21.7		31.3		42.6		55.6		70.4		86.9		125	
10	-		-		0.229		0.514		0.914		2.06		3.66		8.23		14.6		22.9		32.9		44.8		58.5		74.0		91.4		132	
15	-		-		0.279		0.627		1.11		2.51		4.46		10.0		17.8		27.8		40.1		54.6		71.3		90.2		111		160	
20	-		-		0.328		0.737		1.31		2.95		5.24		11.8		21.0		32.8		47.2		64.2		83.9		106		131		189	
25	0.0942		0.212		0.377		0.848		1.51		3.39		6.03		13.6		24.1		37.7		54.2		73.8		96.4		122		151		217	
30	0.106		0.240		0.426		0.958		1.70		3.83		6.81		15.3		27.2		42.6		61.3		83.5		109		138		170		245	
40	0.131		0.295		0.524		1.18		2.40		4.72		8.38		18.9		33.5		52.4		75.4		103		134		170		210		302	
50	0.156		0.350		0.622		1.40		2.49		5.60		9.95		22.4		39.8		62.2		89.6		122		159		202		249		358	
75	0.217		0.488		0.868		1.95		3.47		7.81		13.9		31.2		55.5		86.8		125		170		222		281		347		500	
100	0.278		0.626		1.11		2.50		4.45		10.0		17.8		40.1		71.2		111		160		218		285		361		445		641	
125	0.340		0.764		1.36		3.06		5.43		12.2		21.7		48.9		86.9		136		196		266		348		440		543		783	
150	0.410		0.902		1.60		3.61		6.42		14.4		25.7		57.7		103		160		231		314		411		520		642		924	
175	0.462		1.04		1.85		4.16		7.40		16.6		29.6		66.6		118		-		-		-		-		-		-		-	
200	0.524		1.18		2.09		4.71		8.38		18.9		33.5		75.4		134		-		-		-		-		-		-		-	
225	0.585		1.32		2.34		5.27		9.36		21.1		37.4		84.3		150		-		-		-		-		-		-		-	
250	0.647		1.45		2.59		5.82		10.3		23.3		41.4		93.1		165		-		-		-		-		-		-		-	
275	0.708		1.59		2.83		6.37		11.3		25.5		45.3		102		181		-		-		-		-		-		-		-	
300	0.769		1.73		3.08		6.92		12.3		27.7		49.2		111		197		-		-		-		-		-		-		-	
350	0.892		2.01		3.57		8.03		14.3		32.1		57.1		128		228		-		-		-		-		-		-		-	
400	1.01		2.28		4.06		9.13		16.2		36.5		64.9		146		260		-		-		-		-		-		-		-	
450	1.14		2.56		4.55		10.2		18.2		40.9		72.8		164		291		-		-		-		-		-		-		-	
500	1.26		2.84		5.04		11.3		20.2		45.4		80.6		-		-		-		-		-		-		-		-		-	
1000	2.49		5.60		9.95		22.4		-		-		-		-		-		-		-		-		-		-		-		-	

** To be used for direct discharge to the atmosphere, disk installation ≤ eight diameters from vessel nozzle entry, length of discharge pipe ≤ 5 pipe diameters, nominal diameter of inlet and discharge piping ≥ the NPS designation of the device.*

Vacuum Support Factors: Dial Type: 0.25 to 9 psig (0.02 to 0.62 bar) Bar Type: 10psig (0.69 bar) - 22 psig (1.52 bar)

SIZE	1/2	3/4	1	1.5	2	3	4	6	8	10	12	14	16	18	20	24
Dial Type	-	-	-	.56	.57	.60	.62	.58	.60	.60	.60	.60	.60	.60	.60	.60
Bar Type	-	-	.70	.80	.80	.80	.80	.80	.80	.80	.80	.80	.80	.80	.80	.80

Temperature

-100°F (-73°C) to 400°F (205°C).Higher temperatures to 800°F(427°C) are accommodated using High Temperature Assemblies(HTA) used with armored disks (HTA models are not to be used with models MBV and AMBV disk (disks with vacuum support). The maximum number of High Temperature Assemblies are two per disk. Each HTA will reduce temperatures 200°F (93.3°C). All high temperature assemblies require armoring

- If a disk is ordered with a burst temperature within 40°F (4.5°C) to 100°F (38°C), it will be burst tested and rated at 72° F (22°C).
- If the requested burst temperature is outside of 40°F (4.5°C) to 100°F (38°C) burst tests will be carried out at the actual burst temperature (at no additional charge) and not estimated using a correction coefficient.

(ASME or other international standards certification at additional cost).

Burst Tolerance

The burst tolerance is the maximum variation from the marked burst pressure.

Example, if a Saf-T-Graf MB type disk is ordered with a 29 psig (2 bar) burst pressure, it will burst between 27.5 psig (1.9 bar) and 30.5 psig (2.1 bar).

For reduced tolerances contact BS&B Safety Systems, L.L.C. or BS&B Safety Systems LTD.

Marked Burst Pressure	Tolerance
Less than 1psig (0.07bar)	0.75psig (-0/+0.052bar)
1psig (0.07 bar) - 15 psig	0.75 psig (+/-0.052 bar)
Above 15 psig (1.03bar)	+/-5%

BS&B SAFETY SYSTEMS, L.L.C.
BS&B SAFETY SYSTEMS LTD

BS&B SAFETY SYSTEMS, L.L.C.
7455 East 46th Street, Tulsa, OK 74145, USA
Tel: 1-918-622-5950. Fax: 1-918-665-3904
Toll Free: 1-800-BSB-DISK
E-mail: mktg@bsbsystems.com
www.bsbsystems.com

BS&B SAFETY SYSTEMS LTD.
Bay G-1, Raheen Business Park, Limerick, Ireland
Tel: +353 61 227022. Fax: +353 61 227987
E-mail: sales@bsb.ie
www.bsb.ie

Products, specifications and all data in this literature are subject to change without notice. Questions regarding product selection and specifications for specific applications should be directed to BS&B Safety Systems, LLC or BS&B Safety Systems Ltd.

All sales are subject to BS&B Safety Systems, L.L.C. or BS&B Safety Systems Ltd. standard terms and conditions of sale. Nothing herein should be construed as a warranty of merchantability or fitness for a particular purpose.

Teflon is a DuPont trademark.

©2010 BS&B Safety Systems, L.L.C. Printed in the USA

CalgonCarbon	LINED PIPE MATERIAL SPECIFICATION	SPEC NO:
	PLASTIC LINED STEEL PIPE WITH PLASTIC LINED FLANGED FITTINGS	L01

SAP PART NUMBER:

CCC DRAWING NUMBER:

MATERIAL: Plastic lined steel pipe with plastic lined flanged fittings.

RATING: 150 PSIG @ minus 20 DEG. to plus 225 DEG. F.

CONSTRUCTION: Flanged 1" to 8", Crane Resistoflex brand piping system using polypropylene resin lined steel pipe and lined cast iron flanged fittings. Each spool piece and fitting to be furnished with ends of plastic liner formed over flanged ends to form a molded raised face.

PIPE: Schedule 40, ANSI B36.10, ASTM A53, steel pipe with lining.

FITTINGS: 125 lb., ANSI B16.1, ASTM A126, Class A, cast iron flanged with lining.

FLANGES: 125 lb., ANSI B16.1, ASTM A126, Class A, cast iron, threaded, flat face with smooth finish, drilled and chamfered.

BOLTING: See attached Fastener Specification F03.

FIELD FABRICATION: For piping not shop fabricated Contractor must have special tools and equipment to cut the lined pipe and form the molded raised face on the job. See Crane Resistoflex Design Manual for necessary equipment and instructions.

LINING: Thermally stabilized polypropylene resin.

Issue Date: 08/04/2009 Revision Date: 08/04/2009

Approved by Joseph P. McMahon on 08/13/2009

CalgonCarbon	STAINLESS STEEL PIPE MATERIAL SPECIFICATION	SPEC NO:
	INSTRUMENT PIPING, HEAT TRACING, ETC.	S06

SAP PART NUMBER:

CCC DRAWING NUMBER:

MATERIAL: Stainless steel tubing and flareless compression fittings, and stainless steel pipe and fittings.

RATING: 150 PSIG @ 365 DEG. F.
300 PSIG @ 100 DEG. F.

CONSTRUCTION: For tubing systems 1" and smaller. Pipe and screwed pipe fittings to be used for take-off connections on larger pipe, manifolding, connections to screwed instruments, equipment, etc. Tubing to be used for all other piping in the system.

PIPE NIPPLES: ASTM A312, Type 316, seamless, Schedule 80S, ANSI B36.19, annealed and pickled.

PIPE FITTINGS: Type 316 stainless steel screwed fittings, dimensions per ANSI B16.3, forged, wrought or cast material rated 150 lb. Camco Fittings Co., or equal.

TUBING: Type 316 stainless steel seamless tubing, 0.035" wall thickness, annealed and pickled, hardness 70-74 Rockwell "B", 1/4 O.D.

TUBE FITTINGS: Type 316 stainless steel, flareless compression fittings, Crawford Fitting Company "Swagelok", or equal.

Issue Date: 01/01/89 Revision Date:

Approved by Joseph P. McMahon on 07/24/98

SECTION 3

LINING

Specification No. VS7

For

Vessel Lining Application Specification
Using Carboline/Plasite 4110 Vinyl Ester
For Immersion Service

PROPRIETARY AND CONFIDENTIAL
This document and design details are the property of Calgon Carbon Corporation and are not to be reproduced in whole or part, not employed for any purpose other than specifically permitted in writing by Calgon Carbon Corporation. This document is loaned and subject to return on demand.

TABLE OF CONTENTS

1. QUALITY REQUIREMENTS 3
2. SCOPE OF WORK 4
3. REFERENCE DOCUMENTS 4
4. SERVICE CONDITIONS 8
5. MATERIALS 8
6. DELIVERY, STORAGE AND HANDLING 9
7. APPLICATION 9
8. INSPECTION AND TESTING 16
9. SPECIAL REQUIREMENTS FOR NSF-61 (WHEN SPECIFIED) 18
10. APPENDIX A-INSPECTION PROCEDURE 21
11. APPENDIX B-PLASITE® 4110 PRODUCT DATA 31

PROPRIETARY AND CONFIDENTIAL
This document and design details are the property of Calgon Carbon Corporation and are not to be reproduced in whole or part, not employed for any purpose other than specifically permitted in writing by Calgon Carbon Corporation. This document is loaned and subject to return on demand.

1. QUALITY REQUIREMENTS

1.1. Calgon Carbon Corporation relies on the joint effort between supplier and buyer to emphasize conformance to specification. If conflict exists between this specification, drawings, purchase orders, data sheets or appendix documents, it is the responsibility of the supplier to bring such conflict to the attention of Calgon Carbon Corporation for resolution.

1.2. All vendors are expected to supply products and services with zero defects. Vendors are encouraged to use error prevention processes in their manufacturing procedures to obtain this goal. Calgon Carbon Corporation prefers to address quality issues prior to, and during the lining process rather than at the end. Where the vendor does not fully meet the requirements of this specification, implementation of a corrective action plan to address any deficiencies will be required in writing and subject to Calgon Carbon Corporation approval.

1.3. The vendor agrees to retain objective evidence, including written records of the inspections, measurements and tests performed in the course of blasting, lining, testing, and inspecting. These records shall be made available to the Calgon Carbon Corporation's Quality Inspector for review upon request. Calgon Carbon Corporation may at its discretion use a third party quality inspector for auditing purposes. The vendor's quality department will be notified if this is the course of inspection. Calgon Carbon Corporation requires third party inspectors to perform inspections using the coating manufacture's standards, calibrations and methodologies. All inspectors are to identify themselves at the vendor's facility, inform the vendor of the purpose and scope of the inspection and to conduct themselves in a professional non-confrontational manner.

1.4. The vendor shall submit their corporate QA/QC program, QC personnel with contact info and responsibilities. Inspection, testing procedures and documents are to be submitted to Calgon Carbon Corporation for approval. Please send to the attention of Quality Inspector, Equipment and Assembly Plant, at 4301 Grand Ave, Neville Island, PA 15225.

PROPRIETARY AND CONFIDENTIAL
This document and design details are the property of Calgon Carbon Corporation and are not to be reproduced in whole or part, not employed for any purpose other than specifically permitted in writing by Calgon Carbon Corporation. This document is loaned and subject to return on demand.

1.5. In the event of failure of the lining to withstand the service conditions set forth in Article 4.0, of this specification, the Vendor shall, at his expense, replace the defective materials and workmanship to Calgon Carbon Corporation's satisfaction.

2. SCOPE OF WORK

2.1. This specification covers materials, surface preparation, application and testing of protective coatings for internal lining of carbon steel vessels.

2.2. The scope of work includes all labor, materials, equipment and services required for surface preparation, lining and testing the vessels indicated on the drawings.

2.3. The entire internal surface of the designated vessels including all nozzles and manways shall be lined.

2.4. The lining must completely protect the internal metal surfaces from corrosion.

3. REFERENCE DOCUMENTS

3.1. Carboline Plasite 4110 Technical Bulletin, Carboline Company's most current version.

3.2. When needed use Carboline Plasite PA-3 Specification.

3.3. SSPC, "Pictorial Surface Preparation Standards."

3.4. SSPC, "Profile Comparative Panels."

3.5. NACE Publication RP0288-94, "Recommended Practices for Inspection of Linings on Steel and Concrete."

PROPRIETARY AND CONFIDENTIAL
This document and design details are the property of Calgon Carbon Corporation and are not to be reproduced in whole or part, not employed for any purpose other than specifically permitted in writing by Calgon Carbon Corporation. This document is loaned and subject to return on demand.

3.6. NACE Publication 6F-166, "Recommended Practices for Inspection of Linings on Steel and Concrete."

3.7. D.M. Berger and S.E. Mrox, "Instruments for Inspection of Coatings," ASTM, Journal of Testing & Evaluation, Vol. 4, No.1, 1969.

3.8. NACE Publication 6J-162, "Guide to the Preparation of Contracts and Specifications for the Application of Protective Coatings."

3.9. NACE Standard RP-01-78, "Design, Fabrication and Surface Finish of Metal Tanks and Vessels to be lined for Chemical Immersion Service."

3.10. Ferrous Metals-Preparation Methods

3.10.1 Solvent Cleaning (SSPC-SP1): Solvents such as water, mineral spirits, xylol, toluol, ect., are used to remove solvent-soluble foreign matter from the surface of ferrous metal. Rags and solvents must be replenished frequently to avoid spreading the contaminant rather than removing it. Low-pressure (1500-4000 psi) high volume (3-5) gal./min.) water washing with appropriate cleaning chemicals is a recognized "solvent cleaning" method. All surfaces should be cleaned per this specification prior to using hand tools or blast equipment.

3.10.2 Hand Tool Cleaning (SSPC-SP2) (SSI-St2): A mechanical method of surface preparation involving wire brushing, scraping, chipping and sanding. Not the most desirable method of surface preparation, but can be used for mild exposure conditions. Optimum performances of protective coatings systems should not be expected when hand tool cleaning is employed.

3.10.3 Power Tool Cleaning (SSPC-SP3) (SSI-St3): A mechanical method of surface preparation widely used in industry and involving the use of power sanders or wire brushes, power chipping hammers, abrasive grinding wheels, needle guns, ect. Although usually more effective than hand tool cleaning, it is not considered adequate for use under severe exposure conditions or for immersion applications.

PROPRIETARY AND CONFIDENTIAL
This document and design details are the property of Calgon Carbon Corporation and are not to be reproduced in whole or part, not employed for any purpose other than specifically permitted in writing by Calgon Carbon Corporation. This document is loaned and subject to return on demand.

3.10.4 Power Tool Cleaning to Bare Metal (SSPC-SP11): Utilizing same equipment as Power Tool Cleaning to remove all visible coatings and contaminants to bare metal substrate.

3.10.5 White Metal Blasting (SSPC-SP5), (SSI-Sa3), or (NACE #1): The removal of all visible rust, mill scale, paint, and contaminants, leaving the metal uniformly whit or gray in appearance. This is the ultimate in blast cleaning. Use where maximum performance of protective coatings is necessary due to exceptionally severe conditions such as constant immersion in water or liquid chemicals.

3.10.6 Near White Blast (SSPC-SP10), (SSI-Sa2½), or (NACE #2): In this method all oil, grease, dirt, mill scale, rust, corrosion products, oxides, paint, or other foreign matter have been completely removed from the surface by abrasive blasting, except for very light shadows, very slight streaks or slight discolorations caused by rust stain, mill scale oxides or slight, tight residues of paint of coating. At least 95% of each square inch of surface areas shall be free of all visible residues, and the remainder shall be limited to the light discoloration mentioned above. From a practical standpoint, this is probably the best quality surface preparation that can be expected today for existing plant facility maintenance work.

3.10.7 Commercial Blast (SSPC-SP6), (SSI-Sa2), or (NACE #3): All oil, grease, dirt, rust scale and foreign matter are completely removed from the surface and all rust, mill scale and old paint are completely removed by abrasive blasting except for slight shadows, streaks, or discolorations caused by rust stain, mill scale oxides or slight, tight residues of paint of coating that may remain. If the surface is pitted, slight residues of rust or paint may be found in the bottom of pits: at least two-thirds of each square inch of surface area shall be free of all visible residues and the remainder shall be limited to the light residues mentioned above.

PROPRIETARY AND CONFIDENTIAL
This document and design details are the property of Calgon Carbon Corporation and are not to be reproduced in whole or part, not employed for any purpose other than specifically permitted in writing by Calgon Carbon Corporation. This document is loaned and subject to return on demand.

3.10.8 Brush Off Blast (SSPC-SP7), (SSI-Sa1), or (NACE #4): A method in which all oil, grease, dirt, rust scale, loose mill scale, loose rust, and loose paint or coatings are removed completely. Tight mill scale and tightly-adhered rust, paint and coatings are permitted to remain. However, all mill scale and rust must have been exposed to the abrasive blast pattern sufficiently to expose numerous flecks of the underlying metal fairly uniformly distributed over the entire surface.

3.10.9 High and Ultra-High Pressure Water Jet Cleaning (SSPC-SP12), or (NACE #5): As part of the surface preparation, deposits of oil, grease, and foreign matter must be removed by ultra-high pressure water jetting, by steam cleaning with detergent, or by methods in accordance with SSPC-SP1. The difference in the degrees of surface cleanliness is defined by the amount of pressure as follows:

Low Pressure Water Cleaning (LP WC)	34 MPa	(5 000 psi)
High Pressure Water Cleaning (HP WC)	34 to 70 MPa	(5,000 to 10,000 psi)
High Pressure Water Jetting (HP WJ)	70 to 170 MPa	(10,000 to 25,000 psi)
Ultra-High Pressure Water Jetting (UHP WJ)	Above 170 MPa	(25,000 psi)

PROPRIETARY AND CONFIDENTIAL
This document and design details are the property of Calgon Carbon Corporation and are not to be reproduced in whole or part, not employed for any purpose other than specifically permitted in writing by Calgon Carbon Corporation. This document is loaned and subject to return on demand.

4. SERVICE CONDITIONS

4.1. The lining will be exposed to static and moving water slurries of granular activated carbon, resin and other abrasive media's.

4.2. The characteristics of the slurries will be as follows:

4.2.1	Media in Water		
4.2.2	Temperature	-	35-100F
4.2.3	pH -	-	5.0 to 9.0
4.2.4	Density	-	26 lbs./cu.ft. up to 36 lbs.cu.ft., Dry
4.2.5	Abrasive	-	Yes

5. MATERIALS

5.1. The lining shall be Plasite 4110 coating material as supplied by Carboline Company. Products from other suppliers or manufacturers are not approved.

PROPRIETARY AND CONFIDENTIAL
This document and design details are the property of Calgon Carbon Corporation and are not to be reproduced in whole or part, not employed for any purpose other than specifically permitted in writing by Calgon Carbon Corporation. This document is loaned and subject to return on demand.

6. DELIVERY, STORAGE AND HANDLING

6.1. Product Delivery: Lining material shall be delivered to the site in sealed, original, labeled containers with the Plasite name, product number, batch number, color designation, and instructions for mixing and thinning.

6.2. Storage: Vendor shall be responsible for the proper storage of all coating materials. Damaged, leaking, or unlabeled containers shall be disposed of daily.

6.3. Storage Location: Lining materials shall be stored in a place specifically assigned for that purpose which is dry and out of direct sunlight and stored in a manner so as not to exceed the manufacturer's temperature limitations. In all cases, the storage and handling of lining material shall conform to the requirements of the manufacturer and the applicable safety regulatory agencies.

7. APPLICATION

7.1. Surface Preparation

7.1.1 The lining vendor shall install and maintain protective coverings on any surface not to be lined to protect the surface during surface preparation and lining application.

7.1.2 Grease, Oil & Interference Material: Surface contamination on bare steel such as grease, oil, tape tags, markings, etc. shall be removed by the vendor by solvent cleaning per SSPC-SPI, SSPC-SP12, or NACE #5 prior to blast cleaning.

7.1.3 Surface Irregularities: Prior to blast cleaning, all surfaces shall be inspected for weld spatter, weld flux, or any other surface irregularities. When discovered, they will be removed by grinding.

PROPRIETARY AND CONFIDENTIAL
This document and design details are the property of Calgon Carbon Corporation and are not to be reproduced in whole or part, not employed for any purpose other than specifically permitted in writing by Calgon Carbon Corporation. This document is loaned and subject to return on demand.

7.1.4 Edges: All sharp edges will be ground to a smooth 1/8 inch radius. Areas inside the vessel that are not expected to be in direct contact with media are not required to be chamfered unless noted on the specific detail. (A specific example: the holes in the internal cone design. They do not require a radius or chamfer on their edge since filter nozzles must fit snugly into these holes for proper service.)

7.1.5 Ambient Conditions: Final blast cleaning shall not be performed when the surface temperature is less than 5^0F greater than the dew point temperature of the surrounding air, nor when the relative humidity is greater than 90%.

7.1.6 Compressed Air Cleanliness: The air supply used for blast cleaning shall be free from moisture and oil contamination. The air cleanliness shall be verified at least once per shift for each compressor used. The test involves directing the air stream onto a piece of white paper held not more than 18-inches away from the air outlet. The test shall be run downstream of moisture and oil separators for a period of not less than two-minutes. Sufficient freedom from oil and water is confirmed if no soiling or discoloration is visible on the paper. If air contamination is evidenced, the filters shall be changed or cleaned, traps emptied, after-coolers, moisture separators or filters added, the equipment maintained, or such adjustments made as may be otherwise required to achieve clean, dry air for all blast cleaning, coating application, blow-down, or any other quality operations involving compressed air. Verification of this activity will by required by Calgon Carbon Corporation's inspector.

7.1.7 Abrasive/Profile: The abrasive selected shall be identified by the vendor prior to use. The abrasive shall have a sharp, hard cutting surface and shall be dry and free of oil or soluble salt contaminants. Copper slag shall not be used. The abrasive shall provide an anchor pattern of at least 4.0 mils in depth. The surface profile shall be measured using the WPCC 4000 Series Anchor Profile Comparator or Testex replica tape and measuring the results with a calibrated micrometer.

PROPRIETARY AND CONFIDENTIAL
This document and design details are the property of Calgon Carbon Corporation and are not to be reproduced in whole or part, not employed for any purpose other than specifically permitted in writing by Calgon Carbon Corporation. This document is loaned and subject to return on demand.

7.1.8 Abrasive Blasting of Carbon Steel: The preparation of all carbon steel shall be by abrasive blast cleaning to remove all mill scale, rust and coatings.

7.1.9 Dry abrasive blast all interior steel surfaces in accordance with SSPC-SP5 or NACE #1, "White Metal Blast Cleaning."

7.2. Coating Application Equipment: Reference Source: Carboline Pa-3 Specification

7.2.1 CONVENTIONAL AIR SPRAY GUNS: The following chart indicates the standard types of conventional air spray guns, nozzles and air caps recommended for the best atomization, material break-up and high production rates. Use of a pot with an agitator is preferred.

Gun Fluid Air
Binks #2001 66-SS 63-PB

DeVilbiss JGA-510 E 797

Graco P-800 04-02
Note: The same guns may be used with a stainless needle and tip. GUN FLUID AIR Binks #2001 59ASS 251 with a 559SS needle.

7.2.2 Airless Spray Equipment: The airless pump shall be of sufficient size to properly atomize the coating with the spray tip selected. The orifice size required will range between .013” to .035” varying with the viscosity of the coating. In selecting a spray tip, a suitable fan width for the configuration of the substrate shall be of major consideration. The amount of thinner required will vary up to approximately 20% depending on temperature, substrate size and individual technique.

GUN TIP Graco Bulldog (or equivalent) .013”-.035”

The high build vinyl ester coatings require a large capacity pump with a capability of 3 gpm, a minimum tip size of .025” with a 12” spray width recommended. The liquid pressure shall be in the

PROPRIETARY AND CONFIDENTIAL
This document and design details are the property of Calgon Carbon Corporation and are not to be reproduced in whole or part, not employed for any purpose other than specifically permitted in writing by Calgon Carbon Corporation. This document is loaned and subject to return on demand.

range of 1800 to 2200 psi. Airless spray is not recommended for abrasion resistant formulations because of the extreme wear on the tips and lower units of the pump unless the airless unit is designed for abrasive type of materials.

7.2.3 Airless Spray Advantages and Disadvantages:

Advantages: No problem with contaminated air. Overspray is kept to a minimum and the production rate is high. Thick films may be obtained without runs or sags under some conditions.

Disadvantages: The large output of the gun makes it difficult to handle in small tanks where working conditions are crowded or cramped causing runs or sags.

Due to the large amount of liquid handled and the easy build properties of this equipment, it is possible, with improper thinning and improper technique, to apply the coating material at too high a rate per pass. The end result usually being solvent entrapment and porous film, runs and sags.

7.2.4 Equipment Manufacturers:

Supplier Name Supplier Address Product or Service

Binks Manufacturing Co.
9201 W. Belmont Avenue
Franklin Park, IL 60131
Air Atomizing & Airless Spray Equipment

DeVilbiss Ransburg
1724 Indian Wood Circle, Ste. F
Maumee, OH 43537
Air Atomizing & Airless Spray Equipment

Graco, Inc.
P.O. Drawer 1441
Minneapolis, MN 55440

PROPRIETARY AND CONFIDENTIAL
This document and design details are the property of Calgon Carbon Corporation and are not to be reproduced in whole or part, not employed for any purpose other than specifically permitted in writing by Calgon Carbon Corporation. This document is loaned and subject to return on demand.

Airless Spray Equipment
Nordson Corporation 555 Jackson Street
Amherst, OH 44001
Airless Spray Equipment

7.3. Coating Application

7.3.1 All coatings must be applied in a controlled environment.

Surface Cleanliness: The surface of the prepared steel shall be blown down (clean, dry, compressed air), vacuumed prior to coating application to remove spent abrasive, dust and other interference material. If grease or oil is deposited on the surface, they shall be removed by solvent cleaning (SSPC-SP1) prior to coating application. Any rust which has formed shall be removed to the specified degree of cleanliness prior to lining, which may require reblasting.

7.3.2 Ambient Conditions: Coatings shall be applied only when the interior surface and air temperatures are between 60^0F and 100^0F, the relative humidity in the tank is less than 90%, and the temperature of the surface to be painted is at least 5^0F above the dew point temperature of the air in the tank. Metal temperature shall be recorded on the form EAP-2A provided before application of coating under application data, under ST designation, see Appendix A.

7.3.3 Mixing: Lining's to be mixed shall have been delivered to the jobsite and stored in accordance with Section 6 of this specification and shall not have exceeded its shelf life. Mixing shall conform to the requirements of the coating manufacturer.

Mix Part A into Part B using a high-speed mechanical air or an explosion proof motor agitator with mixing blades fitting close to sides of container, making sure all of Part A is completely mixed with Part B for approximately 15 to 30 minutes to be properly blended. Mix Part D (the promoter) into Part A & B until obtaining a smooth liquid free of any streaking from Part D is complete. Part

PROPRIETARY AND CONFIDENTIAL
This document and design details are the property of Calgon Carbon Corporation and are not to be reproduced in whole or part, not employed for any purpose other than specifically permitted in writing by Calgon Carbon Corporation. This document is loaned and subject to return on demand.

C (the catalyst) can then be mixed into Part A, Part B & Part D blend.

Note: Splitting of kits must not be done.
Caution: The promoter (Part D) and the catalyst (Part C) must be separately mixed into Part A/Part B blend.
Any contact of
Unmixed Part D with Part C may lead to a fire or explosion.
Caution: Avoid breathing dust.

Only complete kits shall be mixed. Lining which has skinned, gelled, separated, or otherwise deteriorated during storage to the extent that it cannot be remixed to a homogeneous film of the intended viscosity, uniformity and consistency shall not be used. Mixed coatings shall not be used beyond their pot life.

7.3.4 Thinning: Only Plasite 20 Thinner shall be used for thinning. The amount of thinning will be limited (except for stripe coat). Thinners, as specified, shall be used to adjust coating for various application conditions. A ratio of 5-20% shall be used depending on ambient conditions and metal temperatures. At 75°F, a suggested thinning ratio is 5-10%; the amount of thinner may be increased at a ratio of approximately 5% per 5°. At higher temperatures, a slower evaporating solvent must be utilized. Thinner should be added if surface temperatures are lower than ambient. A faster evaporating solvent must be utilized in this case.

7.3.5 Methods: Coatings shall be applied by conventional or airless spray equipment. Coating applications shall be in accordance with the requirements of Calgon Carbon Corporation VS-7 Spec, SSPC-PA1 and the Carboline Plasite 4110 Technical Bulletin. In the event of a conflict, the requirements of this specification, manufacturer's instructions and SSPC-PA1l shall prevail in that order. If NSF 61 is specified on the drawing, follow Plasite instructions for compliance to this standard.

PROPRIETARY AND CONFIDENTIAL
This document and design details are the property of Calgon Carbon Corporation and are not to be reproduced in whole or part, not employed for any purpose other than specifically permitted in writing by Calgon Carbon Corporation. This document is loaned and subject to return on demand.

7.3.6 Stripe Coat: A stripe coat of Plasite 4110 thinned 50% with Plasite Thinner 20 shall be applied to all edges, corners, welds, crevices and irregularities prior to each full coat application. Such striping shall extend a minimum of 3-inches beyond the edge or irregularity.

7.3.7 Brush Application: Brush application is not allowed except for touch-up repairs, inaccessible areas and stripe coating. Those areas for which the contractor desires to use brush application shall be carefully defined prior to the start of all work.

7.3.8 Agitation: Lining must be kept agitated in conventional spray pots or containers during lining application.

7.3.9 Coating Thickness: The coating shall be applied in a minimum of two coats. Each coat shall have a dry film thickness of between 17 and 23 mils, with a total system thickness of between 35 and 45 mils. Dry Film Thickness readings need to be taken after each coating of lining. The area then needs to be mapped to recognize the high and low areas. This must be done to avoid too little or too much mileage on the interior of the vessel. High mileage is not an acceptable condition, in most cases the coating will need to be removed to the 35 to 45 mils and the surface condition back to a smooth streamline surface. This is a very expensive process and should be avoided at all cost.

7.3.10 Coating Continuity: All coats shall have smooth, streamline surfaces free of dry spray, over spray, orange peel, fish eyes, craters, bubbles and other significant defects. Shadow-through, honey-comb spray, skips and misses are not acceptable. Runs or sags can be brushed out while the material remains wet. Areas where blast products or other debris have become embedded in the paint film shall be prepared by removing these products and touching up the area. In addition, the final coat shall be tested for discontinuities by performing high-voltage holiday testing at 3,500 volts to obtain a pinhole-free film. Holiday testing shall be performed only after a minimum cure time of 48-hours at 70^0F with ventilation has elapsed after application of the final coat.

PROPRIETARY AND CONFIDENTIAL
This document and design details are the property of Calgon Carbon Corporation and are not to be reproduced in whole or part, not employed for any purpose other than specifically permitted in writing by Calgon Carbon Corporation. This document is loaned and subject to return on demand.

7.3.11 Re-coat Time and Cleanliness: Subsequent coats shall be applied only after the previously-applied coat has been allowed to dry as required by the Plasite 4110 Technical Bulletin, but as soon as possible in order to minimize exposure to inter-coat contamination. Any such surface contamination which is present shall be removed prior to the application of subsequent coats.

8. INSPECTION AND TESTING

8.1. Inspection

8.1.1 The lining vendor shall be responsible for inspecting all phases of the surface preparation and lining application in accordance with Calgon Carbon Corporation's and/or the coating manufacturer's inspection procedures.

8.1.2 Calgon Carbon Corporation reserves the right to inspect all phases of the lining operation to assure compliance with specification requirements. The vendor shall repair/correct any and all deficiencies at his own expense. The vendor shall provide accessibility and lighting for any inspections. It is not intended, however, that the presence or activity of such inspection shall in any way whatsoever relieve the vendor of his obligation to provide inspection of his own to assure compliance with this specification. In all cases, Calgon Carbon Corporation or its approved agent will perform final inspection before acceptance.

8.1.3 Calgon Carbon Corporation reserves the right to stop any and all work at any time for non-compliance with the requirements of this specification.

PROPRIETARY AND CONFIDENTIAL
This document and design details are the property of Calgon Carbon Corporation and are not to be reproduced in whole or part, not employed for any purpose other than specifically permitted in writing by Calgon Carbon Corporation. This document is loaned and subject to return on demand.

8.2. Testing

8.2.1 Use a properly calibrated non-destructive Type II dry film thickness gage:

- Positector: Measures non-magnetic coating thickness over ferrous substrates with an accuracy of ±3%. Digital reading remains until next measurement taken.
- MikroTest Thickness Gauge: A highly accurate hand gauge which operates on the attraction power of a permanent magnet through a non-magnetic coating to the base steel with an accuracy of ±5%.

Frequency and method of calibration shall be in accordance with the SSPC-PA-2.

8.2.2 Determine the average dry film thickness of the lining. All areas with less than 30 mil DFT must have additional lining sprayed on before spark test. High or low areas that require remedial action will be marked so on the lining with chalk. When work is completed, all chalk markings shall be removed. Run thickness test prior to spark test.

8.2.3 One (1) reading shall be taken every 10-ft² and any reading outside of the manufacturer's acceptable range, either higher or lower, will require four (4) additional readings 1-ft in each direction from the suspect reading. Any average of the five (5) readings will be figured and must fall within the manufacturer's acceptable range. If not, mark the area to be corrected with chalk.

8.2.4 After all the readings are taken, they are to be averaged in three (3) sections: top head, shell, and the bottom head or cone. These three averages, along with all the readings taken, shall be recorded on a Calgon Carbon Lining Inspection Report (Appendix A).

PROPRIETARY AND CONFIDENTIAL
This document and design details are the property of Calgon Carbon Corporation and are not to be reproduced in whole or part, not employed for any purpose other than specifically permitted in writing by Calgon Carbon Corporation. This document is loaned and subject to return on demand.

8.2.5 For method and frequency of calibration for the dry-film thickness gauge, see the calibration section of the Manufacturer's information. Any areas not in compliance shall be marked for remedial action with chalk by the inspector.

8.2.6 Spark test for pinholes with a 4500 VDC detector on all coated surfaces. A Tinker and Rasor Model AP-W, or equivalent device, is required for this operation; 3500-volt maximum, minimum 48-hours at 70°F cure before spark test is run.

9. SPECIAL REQUIREMENTS FOR NSF-61 (WHEN SPECIFIED)

9.1. When the end-use application requires compliance with NSF-61, Carboline Plasite must be applied in accordance with specific instructions found in the product bulletin. Applicator must follow these specific instructions.

9.2. Calgon Carbon Corporation will notify lining vendor that this section (9.0) applies by signifying such in the purchase order and/or drawings.

9.3. Force curing may follow the date of application but must be completed prior to the disinfection of the vessel at customer site.

9.4. The NSF criteria specified by Carboline Plasite cannot be altered.

9.5. Force curing must be conducted in a controlled manner. Heat rise shall be not greater than 1 degree per minute, up to the maximum temperature needed to achieve a 200 F minimal surface temperature. This is critical to avoid blistering or post-cure holidays.

9.6. Heat should be applied at top or bottom head to allow equal flow of hot air. If heating in the shell, there should be an internal attachment to allow heat to distribute equally so there is not a section of lining that heats faster than the rest. See appendix for recommended flow distribution according to Plasite's guide.

PROPRIETARY AND CONFIDENTIAL
This document and design details are the property of Calgon Carbon Corporation and are not to be reproduced in whole or part, not employed for any purpose other than specifically permitted in writing by Calgon Carbon Corporation. This document is loaned and subject to return on demand.

9.7. A strip recorder with multiple thermocouples (or other similar device) shall be used to record the temperature during the force cure process. Records shall be forwarded to Calgon Carbon Corporation for retention. Please send to the attention of Quality Inspector, Equipment and Assembly Plant, at 4301 Grand Ave, Neville Island, PA 15225.

PROPRIETARY AND CONFIDENTIAL
This document and design details are the property of Calgon Carbon Corporation and are not to be reproduced in whole or part, not employed for any purpose other than specifically permitted in writing by Calgon Carbon Corporation. This document is loaned and subject to return on demand.

10. APPENDIX A- INSPECTION PROCEDURE

PROPRIETARY AND CONFIDENTIAL
This document and design details are the property of Calgon Carbon Corporation and are not to be reproduced in whole or part, not employed for any purpose other than specifically permitted in writing by Calgon Carbon Corporation. This document is loaned and subject to return on demand.

10. APPENDIX A-INSPECTION PROCEDURE

10.1. SECTION ONE SURFACE PREPARATION

10.1.1 Verify prior to blast cleaning that sharp edges weld spatter, slivers, laminations, scabs or any other surface irregularities have been adequately removed to provide a surface suitable for coating application.

10.1.2 Verify prior to blast cleaning that all heavy deposits of oil and/or grease have been adequately removed in accordance with "Solvent Cleaning" (SSPC-SPI).

10.1.3 Prior to blast cleaning operations, perform compressed air cleanliness test at least once per eight-hour shift. Insert a clean, white blotter or clean, white paper into the air stream no more than 18-inches from air source downstream of moisture and oil separators for approximately two minutes. Examine the blotter or paper for signs of moisture and/or oil contamination. Blast cleaning should not begin unless air is free of detrimental amounts of oil and/or water.

10.1.4 Verify that only clean and dry abrasives will be used. If bulk abrasive is to be used, verify that the abrasive is properly protected from rain, moisture and oil.

10.1.5 If abrasives are recycled, test for the presence of abrasive contamination. Add approximately one ounce of recycled abrasive to several ounces of clean water. Shake contents vigorously and visually examine the water level for signs of oil contamination.

10.1.6 Angular abrasive that will provide an anchor profile depth minimum equal to the SPCC 4000 Series Blast Comparator will be used.

PROPRIETARY AND CONFIDENTIAL
This document and design details are the property of Calgon Carbon Corporation and are not to be reproduced in whole or part, not employed for any purpose other than specifically permitted in writing by Calgon Carbon Corporation. This document is loaned and subject to return on demand.

10.1.7 Verify that required protective coverings are intact to assure that previously-coated surfaces will not be damaged during blast cleaning operations.

10.1.8 Monitor and record ambient conditions and surface temperatures during blast cleaning operations using a psychrometer, surface temperature thermometer and U.S. Weather Bureau Tables.

10.1.9 "Final blast cleaning" shall not be performed unless the surface temperature is at least 50°F higher than the dew point. "Rough blasting" may be performed regardless of ambient conditions, but must be "final blast cleaned" when conditions become favorable.

10.1.10 Verify that blast cleaned surfaces have been prepared in accordance with SSPC-SP5, SSI-Sa3, or NACE#1, "White Metal Blast Cleaning". SSPC-VIS-1 may be used as a visual reference. Mark all non-conforming areas with chalk or spray paint for rework.

10.1.11 Verify the profile (4 mils minimum) has been achieved using the WPCC 4000 Series Blast Comparator.

10.1.12 Using a dry film thickness gage, determine the magnetic base reading and record.

PROPRIETARY AND CONFIDENTIAL
This document and design details are the property of Calgon Carbon Corporation and are not to be reproduced in whole or part, not employed for any purpose other than specifically permitted in writing by Calgon Carbon Corporation. This document is loaned and subject to return on demand.

10.2. SECTION TWO LINING MATERIAL PREPARATION

10.2.1 Verify that all containers are sealed, intact and properly labeled.

10.2.2 Verify that all coating material temperatures are at least 60°F before mixing by the use of a stem thermometer.

10.2.3 Verify type of coating mixed, record and retain batch numbers of all components, type of thinner and batch number, thinning ratios, time of mix, maximum pot life, etc.

10.2.4 Verify that all three components are combined and thoroughly mixed in the proper proportions to obtain a uniform color, free of lumps.

10.2.5 Verify that only the recommended thinner is used.

10.2.6 Verify that the pot life is observed.

10.3. SECTION THREE APPLICATION LINING

10.3.1 Monitor and record ambient conditions and surface temperatures every three to four hours during lining application using a psychrometer, surface temperature thermometer and U.S. Weather Bureau Tables. Coating application shall not be permitted when the surface temperature is less than 50°F above the dew point. No coatings shall be applied when the surface and/or material temperatures are less than 70°F. No coating shall be applied when the surface temperature is expected to drop below 60°F before it has dried. Coating application shall not be permitted when the relative humidity is greater than 90%.

PROPRIETARY AND CONFIDENTIAL
This document and design details are the property of Calgon Carbon Corporation and are not to be reproduced in whole or part, not employed for any purpose other than specifically permitted in writing by Calgon Carbon Corporation. This document is loaned and subject to return on demand.

10.3.2 Verify compressed air cleanliness and test for conventional spray application and blow down operations (see Section 9.1.3). Plasite 4110 must be applied using an agitated conventional pressure pot using continuous agitation during application.

10.3.3 Verify that protective coverings previously established are intact.

10.3.4 Verify that surrounding air is free of airborne contaminants prior to the application of coatings.

10.3.5 Verify intercoat cleanliness and that blast-cleaned surfaces have been cleaned to assure that coatings will not be applied over oil, grease, dirt, dust, spent abrasive, etc.

10.4. SECTION FOUR APPLICATION OF FIRST COAT

10.4.1 Verify that Plasite 4110 has been applied to all surfaces prepared that day before visual oxidation takes place. Any surfaces not primed the same day shall be reblasted prior to primer application.

10.4.2 Verify that weld seams have been brush-coated at least 3-inches on each side of seam prior to spray application.

10.4.3 Verify that the first coat has been applied to a dry film thickness of 17-23 mils. Perform dry film thickness tests in accordance with SSPC-PA2. (Deduct magnetic base reading.)

PROPRIETARY AND CONFIDENTIAL
This document and design details are the property of Calgon Carbon Corporation and are not to be reproduced in whole or part, not employed for any purpose other than specifically permitted in writing by Calgon Carbon Corporation. This document is loaned and subject to return on demand.

10.5. SECTION FIVE APPLICATION OF FINAL COAT

10.5.1 Verify that previously-coated surfaces have dried at least eight hours at 70°F with ventilation prior to application of second coat.

10.5.2 Verify that the final coat has been applied to a dry film thickness of 17-23 mils. Perform dry film thickness test in accordance with SSPC-PA2. (Deduct primer thickness.)

10.6. SECTION SIX FINAL INSPECTION OF LINED SURFACES

10.6.1 Verify that all surfaces have a smooth and uniform appearance free of any irregularities such as debris inclusions, scuff marks or spatter.

10.6.2 Verify that the total dry film thickness (minimum two coats) is 35-45 mils. Perform dry film thickness test in accordance with SSPC-PA2.

10.6.3 Allow 48-hours cure at 70°F before holiday testing. Verify that a void-free, continuous film has been achieved by performing high-voltage holiday detection on 100% of the coated surfaces. The voltage shall be set at 3,500-volts. Mark all discovered holidays and re-test all repairs.

10.6.4 All repairs shall be made in strict accordance with this specification.

PROPRIETARY AND CONFIDENTIAL
This document and design details are the property of Calgon Carbon Corporation and are not to be reproduced in whole or part, not employed for any purpose other than specifically permitted in writing by Calgon Carbon Corporation. This document is loaned and subject to return on demand.

APPENDIX A

BLP-002 A
Lining and Coating
Report Summary

PROJECT/STOCK NO._____ N.B. NO._____ DATE_____

COMPANY_____ INSPECTOR_____

TYPE OF LINING_____ D.F.T. REQUIRED_____

TYPE OF PAINT_____ D.F.T. REQUIRED_____

TYPE OF PAINT_____ D.F.T. REQUIRED_____

****

EXTERIOR INSPECTION SUMMARY: _____

_____

INTERIOR INSPECTION SUMMARY (VISUAL & UNDER CONE):_____

_____

AVG. D.F.T. READINGS (PAINT): TOP _____ BOTTOM _____ SHELL _____ LEGS _____

AVG. D.F.T. READINGS (LINING):
TOP _____ BOTTOM _____ SHELL _____ UNDER CONE _____

CONTINUITY TEST (VOLTS_____) _____
REPAIRS REQUIRED: NO_____ YES_____
COMMENTS:_____

_____

_____

NOZZLES INSTALLED BY: _____DATE: _____ SAP #: _____

NOZZLES VERIFIED BY: _____DATE: _____ SAP #: _____

ALL REPAIRS HAVE BEEN MADE/INSPECTED AS DIRECTED ABOVE: DATE_____

BY_____ AUTHORIZED APPROVAL BY_____

PROPRIETARY AND CONFIDENTIAL
This document and design details are the property of Calgon Carbon Corporation and are not to be reproduced in whole or part, not employed for any purpose other than specifically permitted in writing by Calgon Carbon Corporation. This document is loaned and subject to return on demand.

APPENDIX A

BLP-001 A
Blasting Condition Report

PROJECT SHORTNAME_____NAT=L. BOARD NO._____

PRE-SURFACE PREPARATION	
RADIUSED EDGES: Y___ N___	WELD SURFACE CONDITION: G___ B___
WELD SPATTER: Y___ N___	STEEL CLEANLINESS: G___ B___

SURFACE PREPARATION

INTERIOR BY _____ REQ=D. SSPC SP_____

REQ=D. ANCHOR PATTERN _____ MILS ACTUAL_____

PROFILE CLEANED: Y___ N___

LAP JOINTS FREE: Y___ N___

EXTERIOR BY_____ REQ=D. SSPC SP_____

SUBSTRATE CLEANED: Y___ N___

METHOD: TESTEX TAPE: _____ PROFILE COMPARATOR: _____

AMBIENT CONDITION

DATE	BAROMETRIC PRESSURE	WET BULB	DRY BULB	DEW POINT	RELATIVE HUMIDITY	SURFACE TEMP.

PROPRIETARY AND CONFIDENTIAL
This document and design details are the property of Calgon Carbon Corporation and are not to be reproduced in whole or part, not employed for any purpose other than specifically permitted in writing by Calgon Carbon Corporation. This document is loaned and subject to return on demand.

APPENDIX A

BLP-002A REV.2

LINING DATA SHEET

Lining:

Top Head

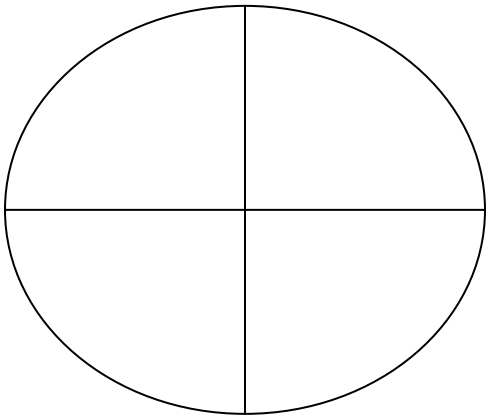

Main Body

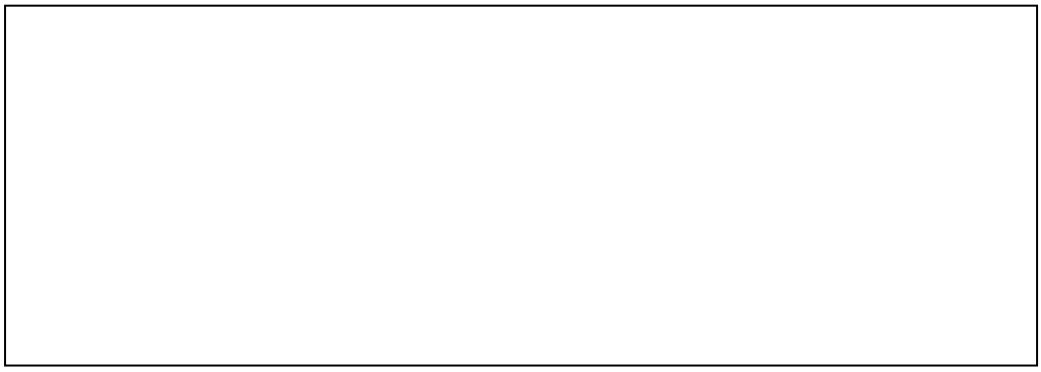

Bottom Head

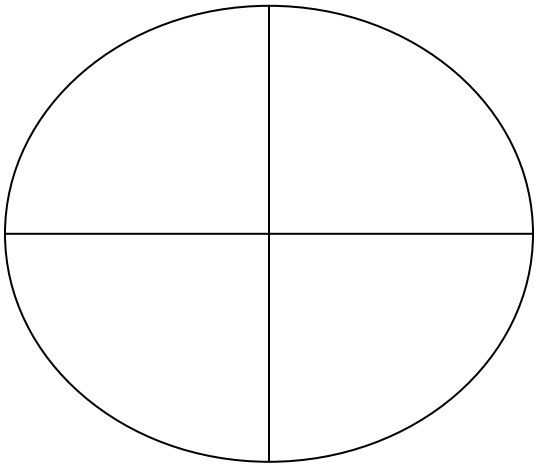

Under Cone

PROPRIETARY AND CONFIDENTIAL
This document and design details are the property of Calgon Carbon Corporation and are not to be reproduced in whole or part, not employed for any purpose other than specifically permitted in writing by Calgon Carbon Corporation. This document is loaned and subject to return on demand.

APPENDIX A

BLP-002 A REV.2
EXTERIOR COATING SHEET

Paint:

Top Head
Exterior

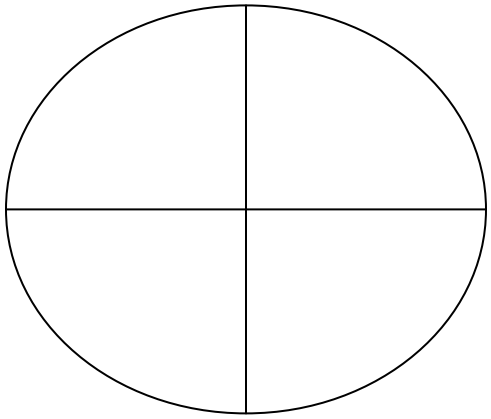

Main Body

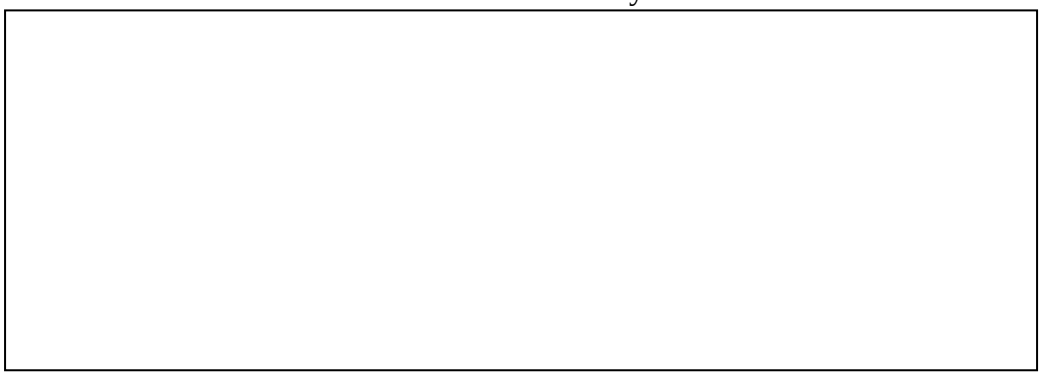

Bottom Head
Exterior

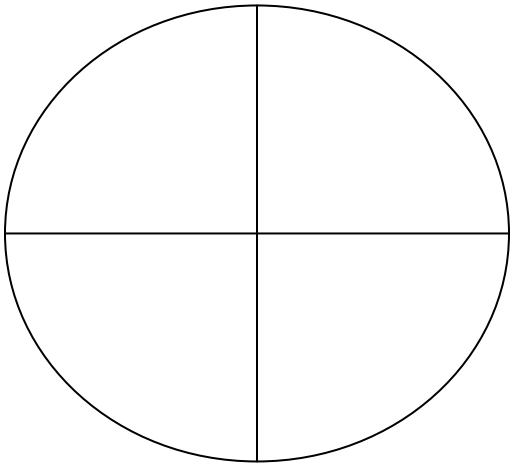

Legs

_____
_____
_____
_____
_____
_____
_____
_____

PROPRIETARY AND CONFIDENTIAL
This document and design details are the property of Calgon Carbon Corporation and are not to be reproduced in whole or part, not employed for any purpose other than specifically permitted in writing by Calgon Carbon Corporation. This document is loaned and subject to return on demand.

APPENDIX A

BLP-002 A REV.2
FINAL LINING HOLIDAY SUMMARY

NATIONAL BOARD: _____ MODEL # : _____

INSPECTION #1, DATE: _____
RESULTS:
_____

_____

_____

INSPECTION #2, DATE: _____
RESULTS:
_____

_____

_____

INSPECTION #3, DATE: _____
RESULTS:
_____

_____

_____

INSPECTION #4, DATE: _____
RESULTS:
_____

_____

_____

HOLIDAY FREE DATE: _____

PROPRIETARY AND CONFIDENTIAL
This document and design details are the property of Calgon Carbon Corporation and are not to be reproduced in whole or part, not employed for any purpose other than specifically permitted in writing by Calgon Carbon Corporation. This document is loaned and subject to return on demand.

11. APPENDIX B- PLASITE® 4110 PRODUCT DATA

PROPRIETARY AND CONFIDENTIAL
This document and design details are the property of Calgon Carbon Corporation and are not to be reproduced in whole or part, not employed for any purpose other than specifically permitted in writing by Calgon Carbon Corporation. This document is loaned and subject to return on demand.

product data carboline®

PLASITE® 4110

NSF Certified

NSF/ANSI 61

TYPE
PLASITE 4110 is a vinyl ester resin combined with special curing system and inert flake pigment to provide outstanding chemical and physical properties. Specially formulated for excellent abrasion resistance. PLASITE 4110 meets the FDA requirements for 21 CFR, 175.300 and 177.2420.

INTENDED USE
As a high chemical abrasion-resistant thick film for tank lining service and as a maintenance coating for severe exposure.

NSF REQUIREMENTS
PLASITE 4110 is certified to NSF/ANSI Standard 61 for cold potable water when the following requirements are met:

- The tank is 3,000 gallons/11,100 liters or larger.
- PLASITE Thinner #20, up to maximum of 20% by volume, may be used for thinning purposes.
- The coating must be applied in 2 to 3 coats to a maximum DFT of 45 mils/1125 microns.
- Prior to placing the lining in service, it must be force cured at 200°F/93°C metal temperature for 4 hours.

TEMPERATURE RESISTANCE
Dry tests 380°F/193°C continuous; limited short excursions to 460°F/238°C acceptable. Wet temperature resistance depends upon concentration and reagent exposure.

COLOR Charcoal gray

FILM THICKNESS
2 to 3 multi-pass spray coats will produce the 35 to 45 mils/875 to 1125 microns dry film thickness recommended for immersion service. Consult Carboline Technical Service Department for any deviation to this film thickness. Refer to APPLICATION section.

VOC CONTENT (Determined Theoretically)

Coating as Supplied		Thinned 5% by Volume with PLASITE Thinner #20	
Lbs./Gal.	**g/L**	**Lbs./Gal.**	**g/L**
0.50 ± 2%	60 ± 2%	0.78 ± 2%	93 ± 2%

COVERAGE
PLASITE 4110 will cover approximately 960 mil ft.^{2}/gal. or 86.4 sq. m. per 25 microns/gal. This is a coverage obtained from field use on small jobs and includes loss in can, spray loss, small amount of shrinkage, etc. Application by conventional spray equipment may affect coverage.

RECOATING TIME
May be recoated after initial 10 hour cure. Following coating must be applied within 30 days. Each following coat should be diluted approximately 2 to 20% with PLASITE Thinner #20.

Note: Previously applied coating exposed to an accumulation of 24 hours of sunlight or surface temperatures in excess of 130°F may result in intercoat disbondment. An applied coating film must be topcoated before an accumulation of 24 hours exposure has occurred or special procedures (such as shading with tarps) must be used.

THINNERS
Use PLASITE Thinner #20. 2 to 20% thinning may be needed to adjust coating for higher temperatures and various application conditions. Topcoating of previously coated films will require the addition of 2 to 20% thinner. Consult Carboline laboratory for unusual thinning requirements. See RECOATING TIME SECTION.
CLEANUP THINNER: Thinner #71

PRIMERS
For steel surfaces, coating is considered to be a "self-priming" system. Do not apply PLASITE 4110 directly to concrete. See reference to fillers and sealers in CONCRETE section.

PHYSICAL SPECIFICATIONS

Pigments: Inert fillers and flake.

Pot Life: 1 1/2 to 3 hours in one gallon cans and 1 1/2 to 2 hours in five gallon cans at 70 to 90°F/21-32°C MATERIAL temperature. MATERIAL temperatures in excess of 90°F will significantly reduce pot life. CAUTION! Do not attempt to extend pot life by mixing newly catalyzed coating into coating near the end of its pot life.

Shelf Life: Approximately 4 months at 75°F/24°C. Cooler storage temperatures will increase shelf life. Storage at higher temperatures can result in substantially shorter shelf life.

Film Density: 79.1 lbs./ft^3 0.26384 lbs./ft^2 at 40 mils.

Elongation: 1.7% using Method ASTM D638.

Shipping Weight: 12 lbs. per gallon kit.

Abrasion Resistance: 11 milligrams average loss per 1000 cycles Taber CS-17 Wheel, 1000 gram weight.

Surface Hardness: Konig Pendulum Hardness of 134 seconds (Glass Standard = 250 seconds); ASTM Method D4366-84.

Thermal Shock: Unaffected by minus 70°F to plus 200°F in 5 cycles, or 40 to 380°F in 10 cycles.

CHEMICAL RESISTANCE
Superior chemical resistance to organic and inorganic acids, oxidizing agents and salts.

CURING
Curing Time: 10 days at 70°F/21°C or 7 days at 90°F/32°C. Although coating may be applied at substrate temperatures as low as 60°F/16°C, the substrate temperature must be raised to at least 70°F/21°C within 12 hours and held until coating surface is tack-free (approximately 10 hours) to avoid possible loss of cure. A minimum of 70°F/21°C surface temperature is required to obtain polymerization of this coating.

Force Curing
Listed below are a few curing schedules that may be used for time and work planning. Prior to raising the metal to the force curing temperature, it is necessary that an air dry time of 2 to 5 hours at temperatures from 70°F/21°C to 100°/38°C be allowed. After the air dry time has elapsed, the temperature should be raised in increments of approximately 30°F/17°C every 30 minutes until the desired force curing metal temperatures are reached. Any moisture from condensation of any source will kill the cure on freshly applied coating before it reaches a "non-tacky" stage. A force cure at 200°F/93°C metal temperature for 4 hours is necessary to comply with NSF Standard 61 requirements.

METAL TEMPERATURE	CURING TIME	METAL TEMPERATURE	CURING TIME
110°F/43°C	72 Hrs	160°F/71°C	4 ½ Hrs
120°F/49°C	36 Hrs	170°F/77°C	3 ½ Hrs
130°F/54°C	18 Hrs	180°F/82°C	2 ½ Hrs
140°F/60°C	10 Hrs	190°F/88°C	2 Hrs
150°F/66°C	6 Hrs	200°F/93°C	1 ¾ Hrs

PACKAGING

1 gallon unit:
1 one gallon can of Part A
1 one gallon can of Part B
1 small container of Part C
1 small container of Part D

5 gallon unit:
1 six gallon partially filled pail of Part A
1 five gallon pail of Part B
1 small container of Part C
1 small container of Part D

To the best of our knowledge the technical data contained herein is true and accurate on the date of publication and is subject to change without prior notice. User must contact Carboline Company to verify correctness before specifying or ordering. No guarantee of accuracy is given or implied. We guarantee our products to conform to Carboline quality control. We assume no responsibility for coverage, performance or injuries resulting from use. Liability, if any, is limited to replacement of products. NO OTHER WARRANTY OR GUARANTEE OF ANY KIND IS MADE BY CARBOLINE, EXPRESS OR IMPLIED, STATUTORY, BY OPERATION OF LAW, OR OTHERWISE, INCLUDING MERCHANTABILITY AND FITNESS FOR A PARTICULAR PURPOSE. Carboline® and Plasite® are registered trademarks of Carboline Company.

PLASITE®4110

NSF Certified

SURFACE PREPARATION

Steel High Temperature & Immersion

All sharp edges shall be ground to produce a radius and all imperfections, such as, skip welds, delaminations, scabs, slivers and slag shall be corrected prior to abrasive blasting. Skip welds should be welded solid. Degrease surface prior to sandblasting. Organic solvents, alkaline solutions, steam, hot water with detergents or other systems that will completely remove dirt, oil, grease, etc. shall be used. Used tanks may require additional decontamination

The surface shall be blasted to SSPC SP-5/NACE No. 1 white metal blast grade using a Venturi blast nozzle with 100 psi/7 bars. Reference Joint Surface Preparation Std. SSPC SP-5/NACE 1, White Metal Blast Cleaning. A blast profile depth or "tooth" in the metal shall be a minimum of 4 mils as determined by comparing Carboline's 4000 Series Blast Comparator, using adequate light and magnification. Comparator panel available by request to Carboline Technical Service. The blast media used shall be properly graded, clean, sharp angular abrasive similar to Humble abrasive flint S7 (6 to 30 mesh), steel grit (HG25), or BLACK BEAUTY® BB1040 to produce the required blast depth.

Remove all traces of grit and dust, as well as, embedded abrasives with a vacuum cleaner and/or by brushing. Care should be taken to avoid contaminating surface with fingerprints or from detrimental material on the workers' clothes or atmospheric contamination.

The surface temperature shall be maintained at a minimum of 5°F/3°C above the dew point to prevent oxidation of the surface. The coating shall be applied within the same day that the surface has been prepared. Visible oxidation or condensation is not allowed.

Severe Corrosive Environments – Splash & Fume

Surface preparation is the same in the foregoing with the exception that NACE No. 2 or SSPC-SP10 near white metal blast may be used providing the blast profile depth as described above is achieved.

Concrete

All concrete requires abrasive blasting to remove laitance and to provide a hard, firm, clean and fully-cured concrete surface for coating. All concrete surfaces are required to be filled and sealed prior to application of PLASITE 4110. Contact Carboline for recommendations.

APPLICATION

Mixing ***(Note: this is a 4-component material)***

Mix Part B into Part A using a mechanical high speed agitator, making sure all Part B is completely mixed with Part A. Maintain a good vortex while mixing un a smooth liquid, free of any unmixed particles of pigment, is obtained (approximately 15-30 minutes). After the pigments and liquid are thoroughly mixed, add the entire amount of the measured liquid promoter (Part D). Mix completely. (no color streaking or residue of part D should remain on the container sidewalls). Allow to cool if material temperature increases, then add Part C and necessary amount of Plasite Thinner #20. Mix an additional three t five minutes.

WARNING! The promoter (Part D) and the catalyst (Part C) must be separately mixed into the coating (Parts A&B). Any contact of unmixed Part C with Part D may lead to a fire or an explosion!

Continuous mixing during use is required. Part A, Part B and Part D may be premixed up to 72 hours prior to adding Part C. Operator should wear face ma during high speed mixing of the coating components. Avoid breathing dust.

Spray

Conventional atomizing spray system shall be equal to: Binks Model 2001 Gun with 59ASS Fluid Nozzle — 251 Air Cap, 559SS Needle. Heavy-duty trigger spring recommended. Pot pressure of approximately 50 psi/3.5 bars. Atomizing pressure of approximately 60 psi/4.1 bars. (Use standard production type pressure pot with air motor drive agitator.)

Note: Application by conventional spray equipment may affect maximum film building capabilities and coverage rates.

Applicators may prefer to apply additional coats to achieve the 40 mil/1000 microns nominal DFT. Airless spray system requires a large capacity pump with a capacity of 3 g.p.m./11.1 l.p.m. similar or equal to: Graco Bulldog with 0.025" or larger fluid nozzle; 12 in/30 cm minimum spray width is recommended. Use liquid pressure of approximately 1800 to 2200 psi/124-152 bars. All screens should be removed from pump and gun. A 3/8 in/9 mm diameter fluid line is recommended. CONTINUOUS MIXING DURING USE IS REQUIRED.

Note: Conventional spray equipment is preferred. Expect higher wear rates to airless spray equipment lower units and spray tips.

A minimum surface temperature of 70°F/21°C is required to obtain polymerization of the coating system. Coating can be applied at a surface temperature as low as 60°F/16°C but polymerization will be inhibited.

Succeeding coats cannot be applied without damaging the system until the surface temperature rises sufficiently to obtain partial polymerization. This will require raising to the minimum surface temperature of 70°F/21°C within 12 hours of application. Refer to CURING section. When surface temperatures are over 100°F/38°C, consult Carboline Technical Service for special instructions.

The mixed coating shall be applied utilizing a multi-pass spray system. Apply horizontal and vertical passes with 50% overlap. Special precautions are required at overlaps and welds to eliminate excessive film build. Spray gun should be perpendicular to surface at all times, approximately 14 in/36 cm from surface.

For non-NSF applications, coating may be overcoated after initial "set" which will occur normally in 3 to 6 hours at 70°F/21°C with proper ventilation. Initial "set" time will decrease as surface temperature increases. Refer to RECOATING TIME section.

When physical contact (foot traffic, scaffolding, etc.) with the previously applied coating, or for NSF applications is needed, a minimum of 10 hours at 70°F/21°C substrate and air temperature with ventilation is required before proceeding. Previously applied coats must have reached a "non-tacky" state before being exposed to physical contact. This condition will occur in less time as surface temperature increases. Overcoating shall be performed as soon as possible to prevent contamination.

Brush

Brush application is not recommended, but may be used for repairs or touch-up. Continuous mixing during use is required.

LINING REPAIR

Clean damaged area, removing all contaminants and loose coating.

Abrasive blast substrate to original specification where coating has been exposed to environment and where oxidation is evident. Feather the original coating not less than 2 in/5 cm from damaged area.

If new coating is physically damaged and has not been in service, repair as shown above. For repairing holidays, sand surface and brush apply proper thickness of coating. Apply coating by brush or spray. Do not apply by brush on areas larger than 1 sq. ft./.093 sq.m.

Warning: Contamination of previously exposed coating film may be detrimental to adhesion of the repair and may affect life expectancy.

INSPECTION

Degree of surface preparation shall conform to appropriate specifications as outlined in SURFACE PREPARATION section.

Metal temperature shall be recorded at least every 4 hours and before application of coating. Humidity (wet bulb reading) shall be taken to ensure that metal temperature is at least 5°F/3°C higher than wet bulb temperature. Dry bulb temperatures shall be recorded at the same time to ensure curing.

For immersion service, a pinhole-free film is essential and testing with Tinker & Rasor Model AP-W or Stearns Model 14/20 or equivalent is required on final film. Use 3000 to 3500 volts. Allow a minimum cure of 48 hours at 70°F/21°C or 36 hours at 90°F/32°C before holiday testing. Dry film thickness shall be a nominal 40 mils/1000 microns with acceptable minimum at 35 mils/875 microns and maximum at 45 mils/1125 microns. Refer to Plasite Bulletin PA-3, Section 3, for inspection requirements.

SAFETY

READ THIS NOTICE

SAFETY AND MISCELLANEOUS EQUIPMENT

For tank lining work and enclosed spaces, it is recommended that the operator provide himself with clean coveralls and rubber soled shoes and observe good personal hygiene. Certain personnel may be sensitive to various types of resins which may cause dermatitis.

THE SOLVENT IN THIS COATING IS FLAMMABLE AND CARE AS DEMANDED BY GOOD PRACTICE, OSHA, STATE AND LOCAL SAFETY CODES, ETC. MUST BE FOLLOWED CLOSELY. Keep away from heat, sparks and open flame and use necessary safety equipment such as air mask, explosion-proof electrical equipment, non-sparking tools and ladders, etc. Avoid contact with skin and breathing of vapor or spray mist. When working in tanks, rooms and other enclosed spaces, adequate ventilation must be provided. Refer to Plasite Bulletin PA-3. Keep out of the reach of children.

The catalyst (Part C) is relatively stable at room temperatures but must be protected from contamination, heat, fire and contact with promoter (in Part D). The catalyst (Part C) is classified by the Interstate Commerce Commission as an "oxidizing material." All shipping containers bear a yellow caution label. The catalyst is highly irritating if it gets into the eyes. Immediately rinse eyes thoroughly with water and get medical attention. The catalyst also can be a skin irritant and should be removed with large quantities of soap and water. Since this is an oxidizing material, it should not be allowed to accumulate or remain in soaked rags or clothing.

carboline®
Coatings - Linings - Fireproofing
2150 Schuetz Rd., St. Louis, MO 63146
PH: 314-644-1000 Toll-Free: 800-848-4645
www.carboline.com

An RPM Company

March 2010 replaces April 2006

To the best of our knowledge the technical data contained herein is true and accurate on the date of publication and is subject to change without prior notice. User must contact Carboline Company to verify correctness before specifying or ordering. No guarantee of accuracy is given or implied. We guarantee our products to conform to Carboline quality control. We assume no responsibility for coverage, performance or injuries resulting from use. Liability, if any, is limited to replacement of products. NO OTHER WARRANTY OR GUARANTEE OF ANY KIND IS MADE BY CARBOLINE, EXPRESS OR IMPLIED, STATUTORY, BY OPERATION OF LAW, OR OTHERWISE, INCLUDING MERCHANTABILITY AND FITNESS FOR A PARTICULAR PURPOSE. Carboline® and Plasite® are registered trademarks of Carboline Company.

SECTION 4

PAINT SPECIFICATIONS

SPECIFICATION NUMBER: RS17
EPOXY PAINTING

1.0 SCOPE

1.1 This specification covers the minimum procedures required for the surface preparation and coating of equipment that has not been previously painted. It also covers equipment that has been previously painted.

1.2 The work to be performed under this specification consists of painting all metal materials including vessels, supports, base plates, skids, pipe, pipe supports, brackets, hanger rods, pipe clamps, and all other metal surfaces, not mentioned in Section 5.0, that are part of the system.

1.3 The "applicator" referred to in this specification could be Calgon Carbon Corporation or a sub-contractor.

1.4 Unless otherwise specified, the applicator shall furnish all paints and solvents, necessary tools, scaffolds, ladders, compressed air, etc.

1.5 The applicator will familiarize himself with rules and regulations as set forth by the Safety Department of the facility where painting is to be conducted and comply with these regulations.

2.0 SURFACE PREPARATION OF PAINTED SURFACES

2.1 ***Previously coated surfaces that are in good condition:***

Maintenance painting will frequently not permit or require complete removal of all old coatings prior to re-painting. However, all surface contamination such as oil, grease, loose paint, mill scale, dirt, foreign matter, rust, mold mildew, mortar, efflorescence and sealers must be removed to assure sound bonding to the tightly adhering old paint.

In addition, glossy surfaces of old paint films must be clean and dull before re-painting. Thorough washing with an abrasive kitchen cleanser will clean and dull in one operation, or wash thoroughly and dull by sanding. Remove all sanding dust.

It is recommended that water blasting be used (NACE Standard RP-01-72) which removes foreign matter by water (with cleanser) at pressures of 2,000-5,000 PSI at a flow of 4-14 gallons per minute.

The applicator shall recognize that any surface preparation short of total removal of the old coatings may compromise the service length of the new coating system. The applicator shall always check for the compatibility of the previously-painted surface with the new coating by applying a test patch of 2-3 square feet. Allow to dry thoroughly; then check adhesion.

CALGON CARBON CORPORATION ♦ COPYRIGHT 2011 ♦ ALL RIGHTS RESERVED

2.2 ***Previously coated surfaces that are not in good condition:***

The applicator will hand-tool clean the surfaces to remove loose rust, loose mill scale and loose paint to the degree specified by SSPC-SP2-63. The applicator shall accomplish this by hand chipping, scraping, sanding, and wire brushing. The applicator shall further prepare the hand-tool cleaned surface per Paragraph 2.1 above.

3.0 SURFACE PREPARATION OF UNPAINTED SURFACES

3.1 The metal surface shall be free of dirt, rust, rust-proofing, drawing oils and compounds, finger prints, mill scale, and other foreign substances both visible and invisible; thereby improving adhesion and reducing the tendency to blister and corrode on exposure.

3.2 The applicator shall use remove all loose rust and mill scale to the degree specified by SSPC-SP3-63 by power-tool chipping, de-scaling, sanding, wire brushing, grinding, or media blasting as a minimum. SSPC-SP7 Brush-off Blast cleaning is preferred.

4.0 PAINT APPLICATION

4.1 The coating shall be applied in accordance with the manufacturer's instructions.

4.2 The system shall consist of at least one (1) coat of epoxy mastic to a total DFT of 6 nominal mils (acceptable range: 5-7 mils).

4.3 All paint shall be within its expiration date and furnished in unopened containers.

4.4 Thinners shall be used only with the permission of Calgon Carbon Corporation.

4.5 Painting will not be allowed when the relative humidity is above 85% or the temperature is below 55°F without special permission from Calgon Carbon Corporation.

4.6 Any surface that develops rust prior to painting shall be re-prepared per Sections 2.0 or 3.0 above.

5.0 AREAS NOT TO BE PAINTED

5.1 Galvanized steel (new) and PVC pipe are not to be painted.

5.2 Inside of pipes shall not be painted.

5.3 Gauge faces, nameplates, plastic or S/S fittings, flange faces, etc. shall be taped to protect against overspray and tape shall be removed prior to shipping.

5.4 Inside of vessel shall be lined by others.

CALGON CARBON CORPORATION ♦ COPYRIGHT 2011 ♦ ALL RIGHTS RESERVED

6.0 MATERIAL SPECIFICATION

6.1 The paint used shall be Carboline Carboguard 60 (two-part) Epoxy Coating System, or equal. The manufacturer's specifications are attached and shall be followed along with any recommendations and precautions stated on the paint can label.

Accepted substitutes are:

Sherwin-Williams -- Macropoxy 646 Series
International Protective Coatings -- Interseal 670

Other manufacturers may be proposed, but are subject to Calgon Carbon approval prior to use.

6.2 The color shall match Carboline #A767 "Slate Gray" or as specified on the project drawings.

* * *REVISIONS* * *

This specification has been revised as indicated below. The new pages added and/or the existing pages revised are attached as replacements for those previously issued.

REVISION	DATE	BY	PAGE	REMARKS
0	9/8/1989	FRF	All	Issued for Construction
1	1/30/1996	JPM	All	All New Pages; Revised Paragraph 4.1
2	4/15/1996	JPM	1-2-3	Revised Paragraphs 1.3, 2.2, 3.2, 4.1 ,5.3, 6.1 and 6.2
3	6/4/2002	JPM	All	Revised 1.2,1.5,3.2,5.3,6.1,6.2
4	6/08/2007	TAB	3	Revised 6.1 and 6.2
5	4/22/2008	RES	All	General Revision
6	01/13/2010	RES	3	Revised Paragraph 6.1 to SW 646
7	04/09/2013	RES	3	Revised Paragraphs 6.1 and 6.2

ISSUED: SEPTEMBER 8, 1989

CALGON CARBON CORPORATION ♦ COPYRIGHT 2011 ♦ ALL RIGHTS RESERVED

SECTION 5

DRAWINGS

SECTION 5

DRAWING INDEX

DRAWING NUMBER	REVISION	TITLE
91157779	B	Model 10 Carbon Adsorber System, 8" Piping, Non-Potable, Flow Diagram
91157780	A	Model 10 System, 125 PSIG, 10 ø Vessel, 8" Piping, General Arrangement; Sheets 1 & 2
91157781	B	Model 10, 125 PSIG, 10 Ft. Dia., Vessel Arrangement; Sheets 1 & 2

CALGON CARBON CORPORATION ♦ COPYRIGHT 2016 ♦ ALL RIGHTS RESERVED

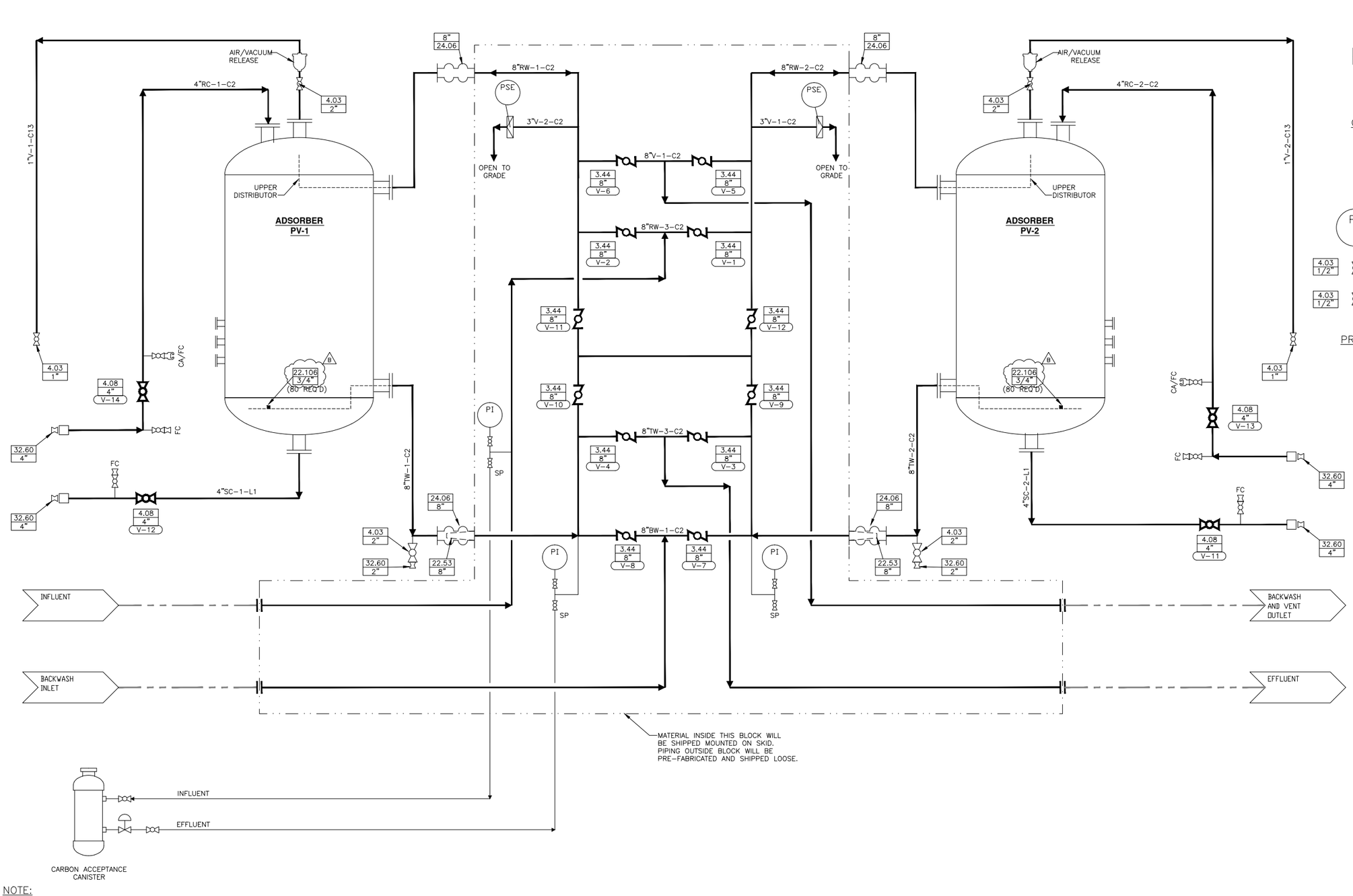

NOTE:
FOR CAC INSTALLATION, SEE O&M MANUAL.

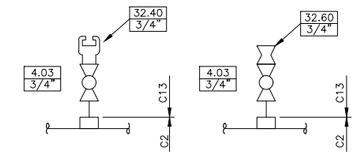

MEDIA	INSTRUMENTATION	DESIGN CONDITIONS	LEGEND	ADSORBERS	UTILITY REQUIREMENTS
MEDIA: OLC 12 X 40 (B) QUANTITY PER VESSEL: 20,000 LBS. SERVICE: NON-POTABLE	PI 217 PSE 577 FOR 100 psig MAX. OPER. PRESS. AIR/VACUUM RELEASE - BERMAD MODEL 02-ARC-P	FLOW RATE - 1000 GPM (SERIES) 1400 GPM (PARALLEL) INFLUENT PRESSURE - 100 PSIG MAX. INFLUENT TEMP. - ~~120°F MAX.~~ (B) BACKWASH RATE - ~~550 GPM @ 60° F.~~ (B) ELECTRIC POWER - ~~120 V, 60~, SINGLE~~ PHASE, 15 AMP	BW - BACKWASH WATER FC - FLUSH CONNECTION RC - REACT.(OR VIRGIN) CARBON RW - RAW WATER SC - SPENT CARBON SLURRY SP - SAMPLE PORT TW - TREATED WATER V - VENT	10'-0" O.D. x 10'-0" S.S. ASME 2:1 ELLIPTICAL TOP AND BOTTOM HEADS. CARBON STEEL CONSTRUCTION. ASME SECT. VIII, DIV. 1 W/ PLASITE 4110 LINING 125 PSIG @ 140°F DESIGN.	AIR, CARBON TRANSFER - 100 SCFM @ 30 PSIG MIN. PLANT WATER - 100 GPM @ 30 PSIG MIN.

THIS DRAWING AND DESIGN IS THE PROPERTY OF CALGON CARBON CORPORATION AND IS NOT TO BE REPRODUCED IN WHOLE OR IN PART NOR EMPLOYED FOR ANY PURPOSE OTHER THAN SPECIFICALLY PERMITTED IN WRITING BY CALGON CARBON CORPORATION. THIS DRAWING LOANED SUBJECT TO RETURN ON DEMAND.

	NAME	DATE
DRAFTER	JPARRISH	12/11/2015
DESIGNER		
CHECKER		
APPROVAL		
PROJECT No.	CTO.150010.KRTAF	

REV	DESCRIPTION	APP	DATE
B	UPDATE MEDIA AND FILTER NOZZLES	RES	2/9/2016
A	SUBMIT FOR APPROVAL	RES	12/23/2015

REVISIONS

TOLERANCES (unless otherwise specified)

ANGULAR	±0°30'	DECIMAL (2 PLACES)	±.010
FRACTIONAL	±1/16"	DECIMAL (3 PLACES)	±.005
DECIMAL (1 PLACE)	±.015	DECIMAL (4 PLACES)	±.0005

CalgonCarbon

CLIENT
KIRTLAND AFB
ALBUQUERQUE, NM

TITLE
MODEL 10 CARBON ADSORBER SYSTEM
8" PIPING, NON-POTABLE
FLOW DIAGRAM

DWG. Size	SHEET No.	SCALE
D	1 OF 1	NONE

DWG. No. 91157779 REV. B

V:\2015\CTO.150010.KRTAF\Drawings\Process\91157779 P&ID.dwg Feb 09, 2016 - 1:19pm

SYSTEM DATA	
DESIGN CONDITIONS	125 PSIG @ 140° F
DESIGN CODE	ASME SECTION VIII DIVISION1
APPROXIMATE WEIGHTS (LB.)	
VESSEL (EMPTY)	16,500
CARBON (PER VESSEL)	20,000
VESSEL (OPERATING)	102,000
SYSTEM (EMPTY)	40,000
SYSTEM (OPERATING)	214,000

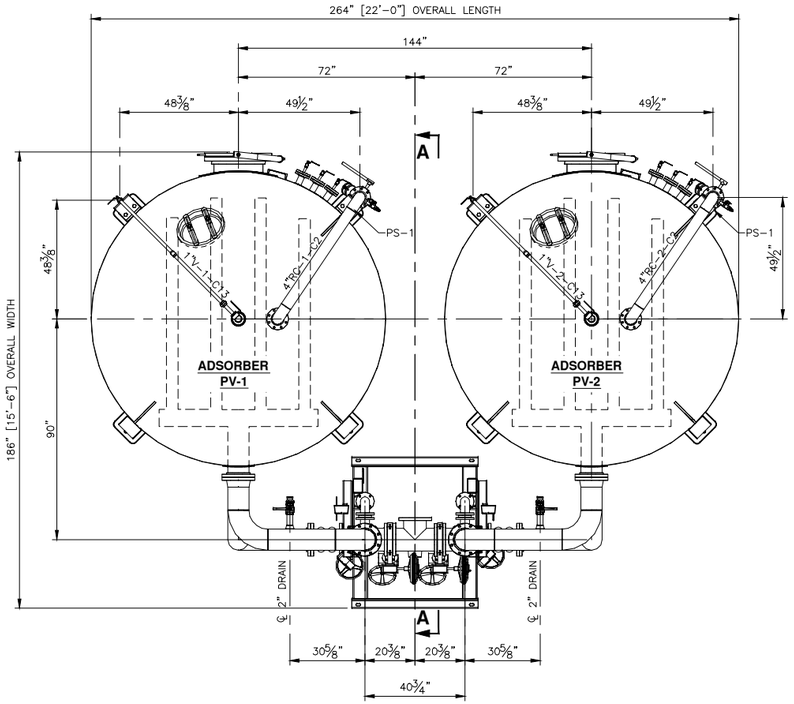

PLAN

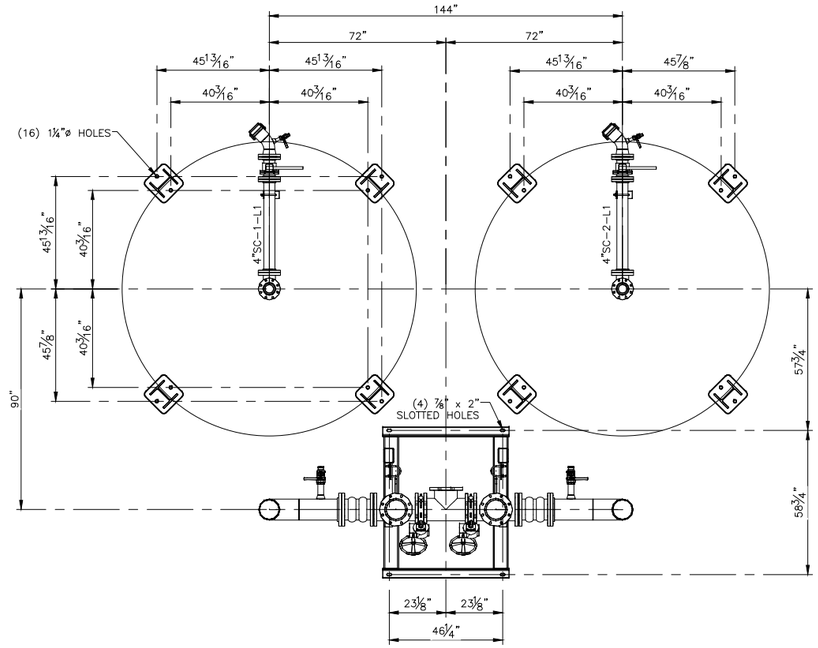

LOWER PLAN

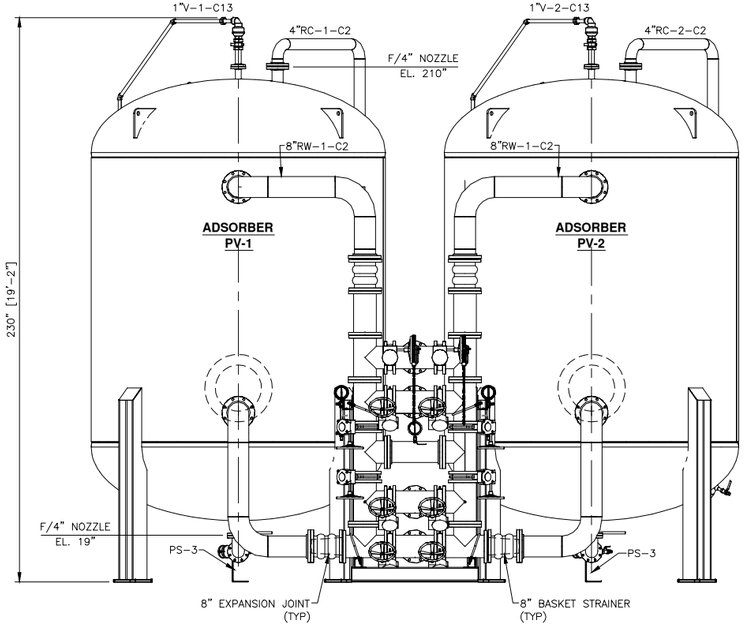

ELEVATION

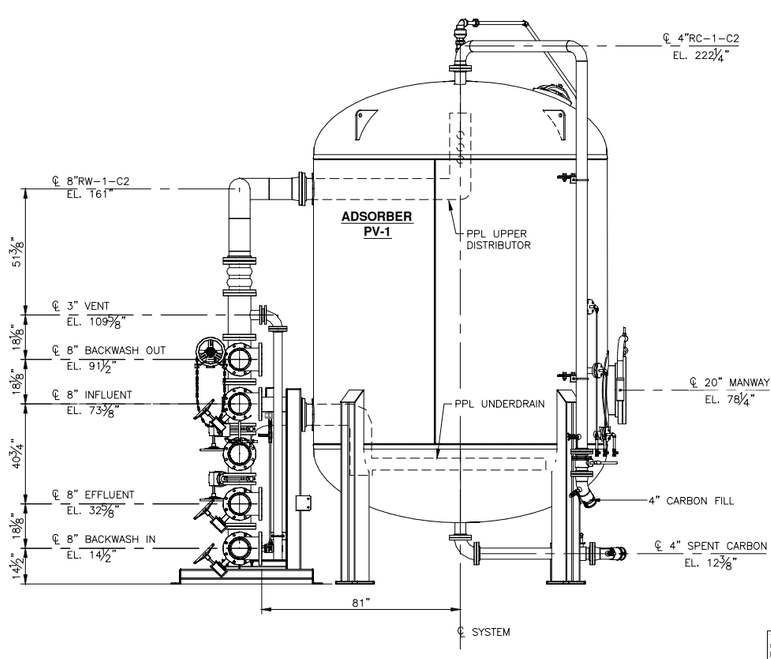

SECTION A-A

THIS DRAWING AND DESIGN IS THE PROPERTY OF CALGON CARBON CORPORATION AND IS NOT TO BE REPRODUCED IN WHOLE OR IN PART NOR EMPLOYED FOR ANY PURPOSE OTHER THAN SPECIFICALLY PERMITTED IN WRITING BY CALGON CARBON CORPORATION. THIS DRAWING LOANED SUBJECT TO RETURN ON DEMAND.

	NAME	DATE
DRAFTER	JPARRISH	12/15/2015
DESIGNER		
CHECKER		
APPROVAL		
PROJECT No.	CTO.150010.KRTAF	

REV	DESCRIPTION	APP	DATE
A	SUBMIT FOR APPROVAL	RES	12/23/2015

REVISIONS

TOLERANCES (unless otherwise specified)

ANGULAR	±0°30"	DECIMAL (2 PLACES)	±.010
FRACTIONAL	±1/16"	DECIMAL (3 PLACES)	±.005
DECIMAL (1 PLACE)	±.015	DECIMAL (4 PLACES)	±.0005

CalgonCarbon

CLIENT
KIRTLAND AFB
ALBUQUERQUE, NM

TITLE
MODEL 10 SYSTEM, 125 PSIG
10'ø VESSEL, 8" PIPING
GENERAL ARRANGEMENT

DWG. Size	SHEET No.	SCALE
D	1 OF 2	NONE

DWG. No. 91157780 REV. A

V:\2015\CTO.150010.KRTAF\Drawings\General Arrangements\91157780 GA.dwg Dec 29, 2015 - 9:14am

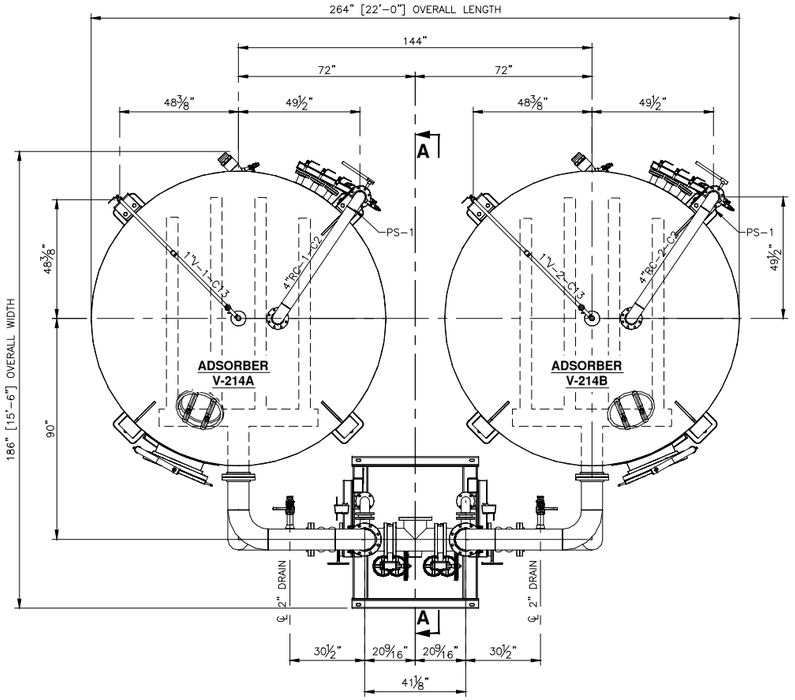

PLAN

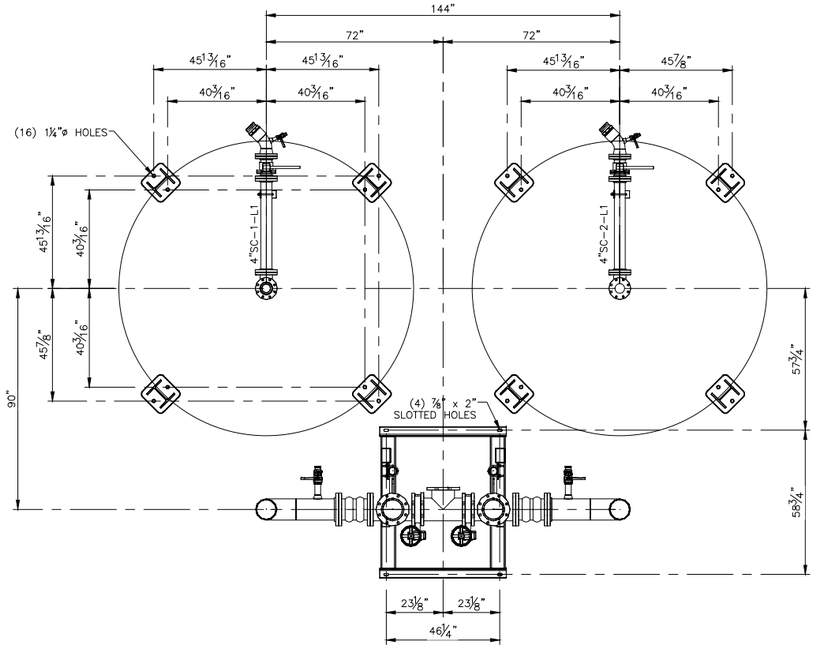

LOWER PLAN

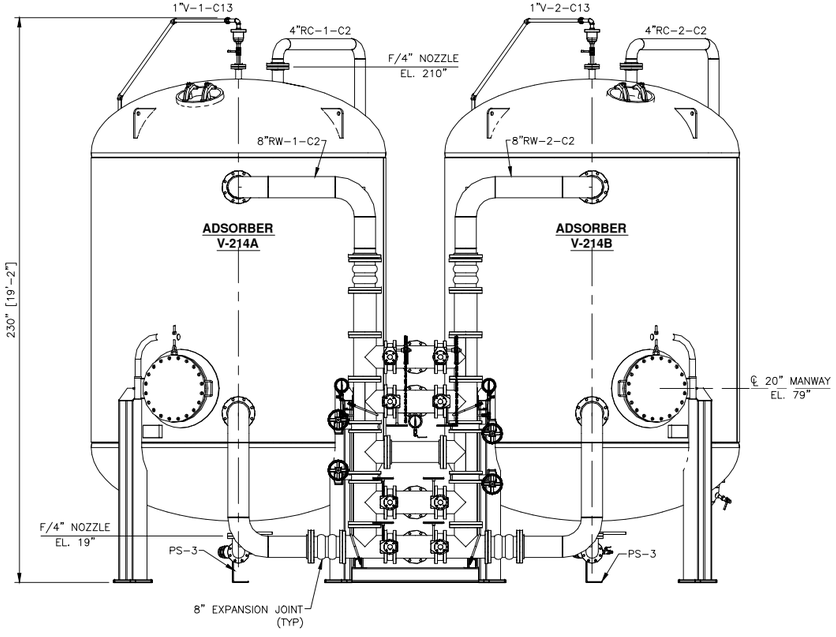

ELEVATION

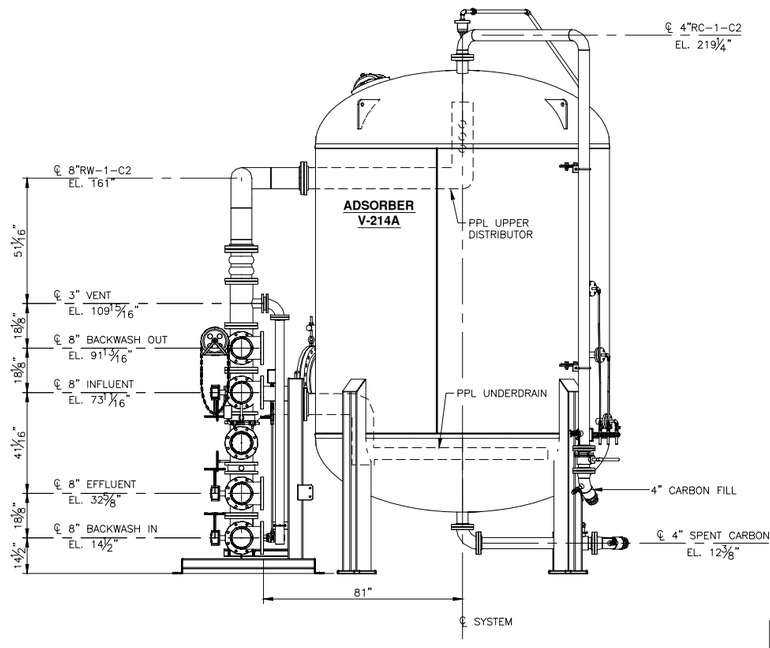

SECTION A-A

SYSTEM DATA	
DESIGN CONDITIONS	125 PSIG @ 140° F
DESIGN CODE	ASME SECTION VIII DIVISION1
APPROXIMATE WEIGHTS (LB.)	
VESSEL (EMPTY)	14,100
CARBON (PER VESSEL)	20,000
VESSEL (OPERATING)	90,000
SYSTEM (EMPTY)	40,000
SYSTEM (OPERATING)	214,000

NOTE:
1.) PIPE PAINTED TO MATCH VESSEL.

PIPE SUPPORT SCHEDULE			
ITEM#	REQ'D	DRAWING#	DESCRIPTION
PS-1	4	90110065	RAW CARBON
PS-2	4	90110118	AIR / VACUUM RELEASE
PS-3	2	91168001	SPENT CARBON
PS-4	2	91167959	SAMPLE/UNDER CONE VENT

REV	DESCRIPTION	APP	DATE
0	ISSUE FOR FABRICATION	RES	6/29/2016

REVISIONS

TOLERANCES (unless otherwise specified)

ANGULAR	±0°30"	DECIMAL (2 PLACES)	±.010
FRACTIONAL	±1/16"	DECIMAL (3 PLACES)	±.005
DECIMAL (1 PLACE)	±.015	DECIMAL (4 PLACES)	±.0005

THIS DRAWING AND DESIGN IS THE PROPERTY OF CALGON CARBON CORPORATION AND IS NOT TO BE REPRODUCED IN WHOLE OR IN PART NOR EMPLOYED FOR ANY PURPOSE OTHER THAN SPECIFICALLY PERMITTED IN WRITING BY CALGON CARBON CORPORATION. THIS DRAWING LOANED SUBJECT TO RETURN ON DEMAND.

	NAME	DATE
DRAFTER	JPARRISH	12/15/2015
DESIGNER		
CHECKER	JFS	6/28/2016
APPROVAL		
PROJECT No.	CTO.150010.KRTAF	

CalgonCarbon

CLIENT
KIRTLAND AFB
ALBUQUERQUE, NM

TITLE
MODEL 10 SYSTEM, 125 PSIG
10'ø VESSEL, 8" PIPING
GENERAL ARRANGEMENT

DWG. Size	SHEET No.	SCALE
D	1 OF 2	NONE
DWG. No. 91157780		REV. 0

V:\2015\CTO.150010.KRTAF\Drawings\General Arrangements\91157780 GA.dwg Jun 29, 2016 - 3:46pm

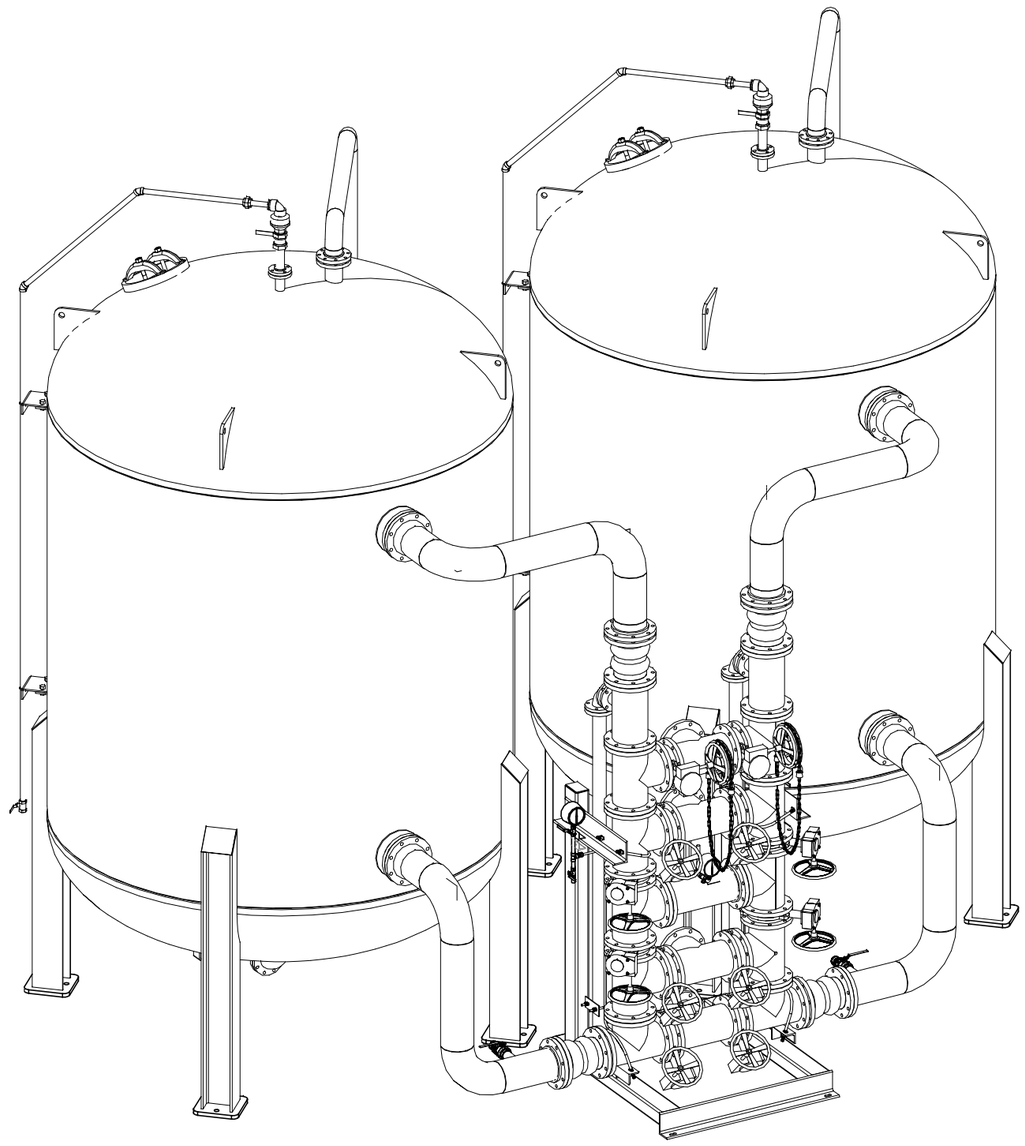

ISOMETRIC FRONT VIEW

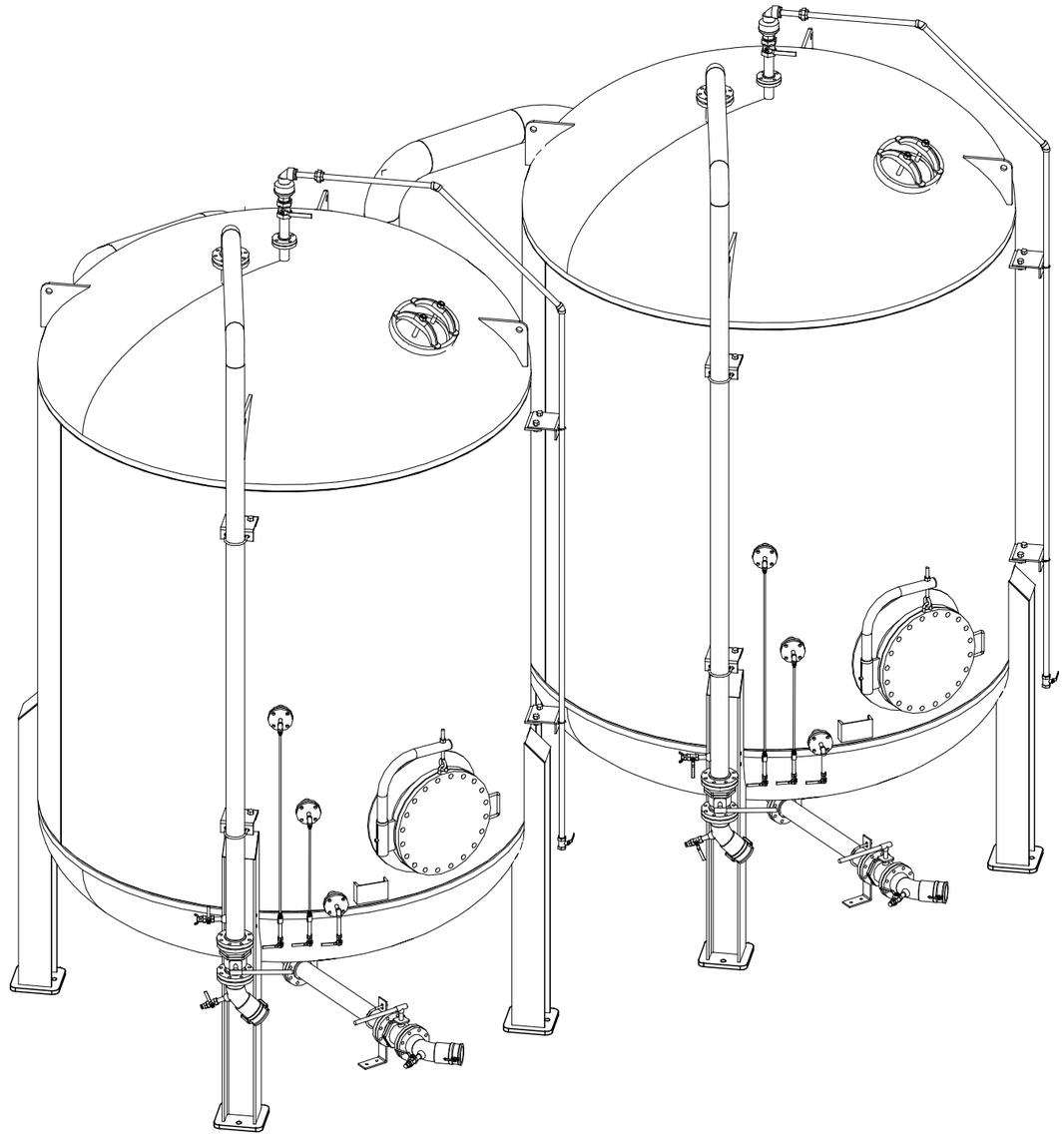

ISOMETRIC REAR VIEW

REV	DESCRIPTION	APP	DATE
A	SUBMIT FOR APPROVAL	RES	12/23/2015

REVISIONS

TOLERANCES (unless otherwise specified)

ANGULAR	±0°30'	DECIMAL (2 PLACES)	±.010
FRACTIONAL	±1/16"	DECIMAL (3 PLACES)	±.005
DECIMAL (1 PLACE)	±.015	DECIMAL (4 PLACES)	±.0005

THIS DRAWING AND DESIGN IS THE PROPERTY OF CALGON CARBON CORPORATION AND IS NOT TO BE REPRODUCED IN WHOLE OR IN PART NOR EMPLOYED FOR ANY PURPOSE OTHER THAN SPECIFICALLY PERMITTED IN WRITING BY CALGON CARBON CORPORATION. THIS DRAWING LOANED SUBJECT TO RETURN ON DEMAND.

	NAME	DATE
DRAFTER	JPARRISH	12/15/2015
DESIGNER		
CHECKER		
APPROVAL		

PROJECT No. CTO.150010.KRTAF

CalgonCarbon

CLIENT: KIRTLAND AFB
ALBUQUERQUE, NM

TITLE: MODEL 10 SYSTEM, 125 PSIG
10'ø VESSEL, 8" PIPING
GENERAL ARRANGEMENT

DWG. Size	SHEET No.	SCALE
D	2 OF 2	NONE

DWG. No. 91157780 REV. A

V:\2015\CTO.150010.KRTAF\Drawings\General Arrangements\91157780 GA.dwg Dec 29, 2015 - 9:15am

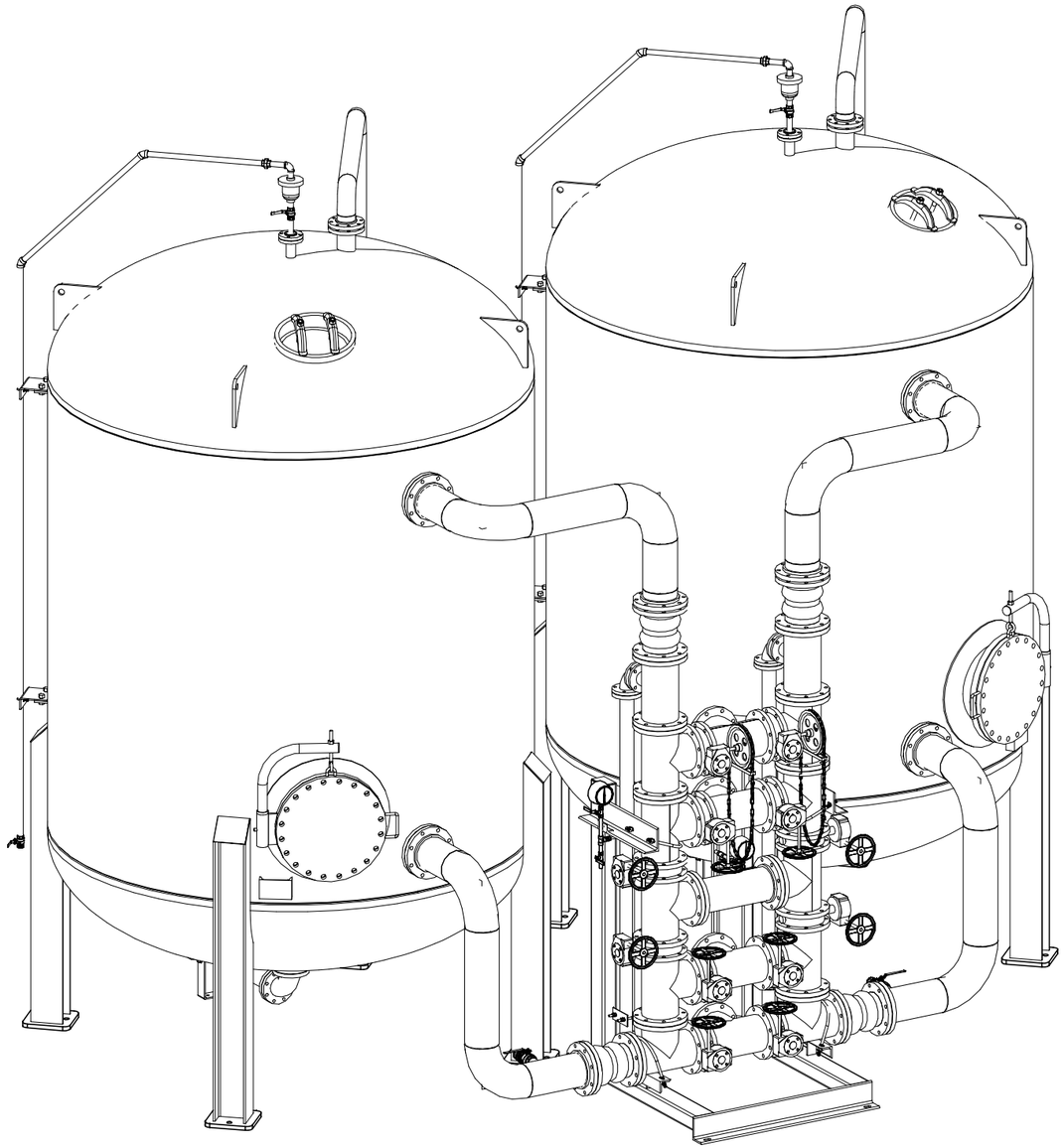

ISOMETRIC FRONT VIEW

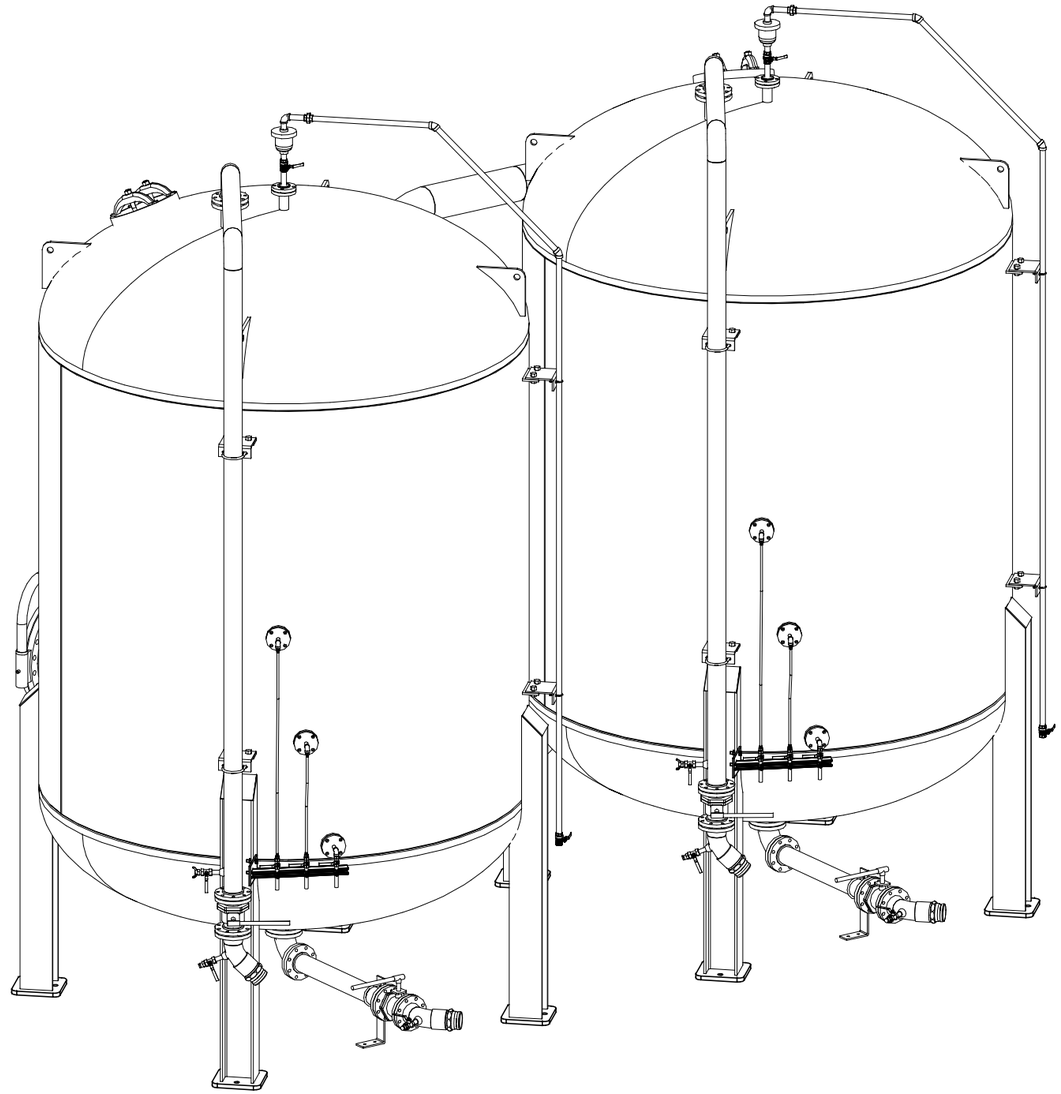

ISOMETRIC REAR VIEW

REV	DESCRIPTION	APP	DATE
0	ISSUE FOR FABRICATION	RES	6/29/2016

REVISIONS

TOLERANCES (unless otherwise specified)

ANGULAR	±0°30'	DECIMAL (2 PLACES)	±.010
FRACTIONAL	±1/16"	DECIMAL (3 PLACES)	±.005
DECIMAL (1 PLACE)	±.015	DECIMAL (4 PLACES)	±.0005

THIS DRAWING AND DESIGN IS THE PROPERTY OF CALGON CARBON CORPORATION AND IS NOT TO BE REPRODUCED IN WHOLE OR IN PART NOR EMPLOYED FOR ANY PURPOSE OTHER THAN SPECIFICALLY PERMITTED IN WRITING BY CALGON CARBON CORPORATION. THIS DRAWING LOANED SUBJECT TO RETURN ON DEMAND.

	NAME	DATE
DRAFTER	JPARRISH	12/15/2015
DESIGNER		
CHECKER	JFS	6/28/2016
APPROVAL		
PROJECT No.	CTO.150010.KRTAF	

CalgonCarbon

CLIENT: KIRTLAND AFB
ALBUQUERQUE, NM

TITLE: MODEL 10 SYSTEM, 125 PSIG
10'ø VESSEL, 8" PIPING
GENERAL ARRANGEMENT

DWG. Size	SHEET No.	SCALE
D	2 OF 2	NONE

DWG. No. 91157780 REV. 0

V:\2015\CTO.150010.KRTAF\Drawings\General Arrangements\91157780 GA.dwg Jun 29, 2016 - 3:47pm

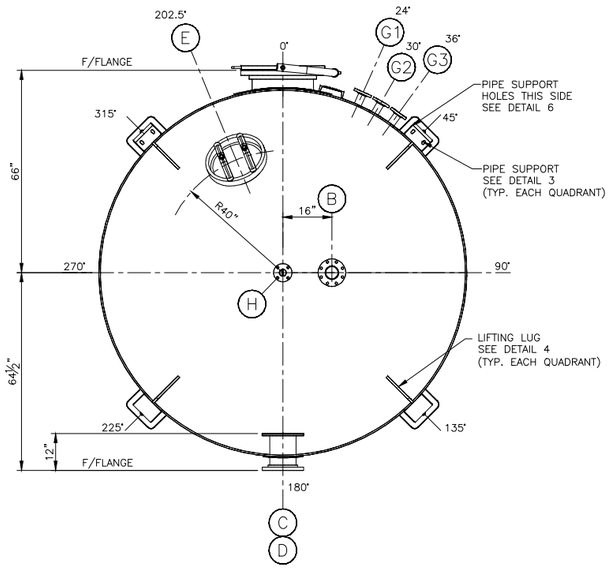

PLAN

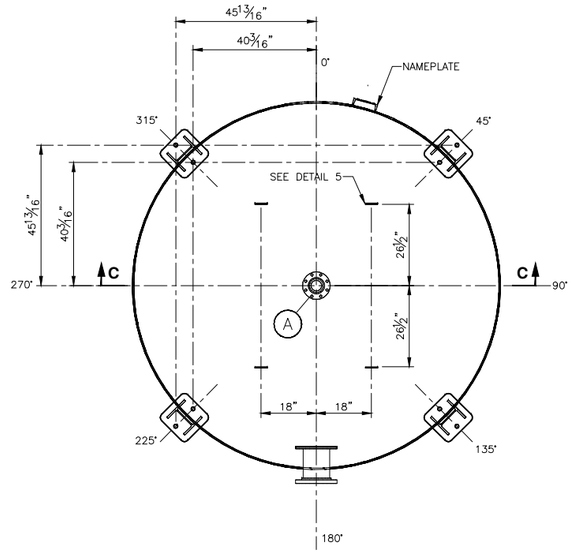

SECTION A-A

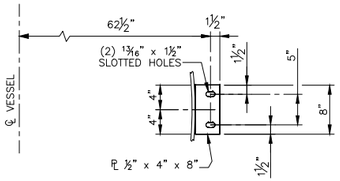

DETAIL 3
PIPE SUPPORT
(4) REQ'D

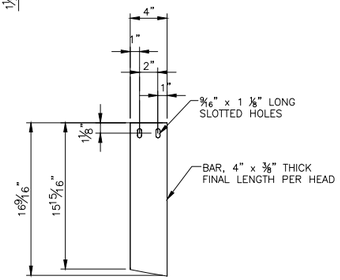

DETAIL 5
UNDER DRAIN CLIP
(4) REQ'D

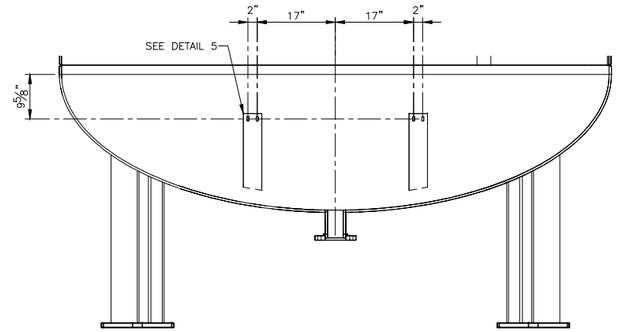

SECTION C-C
UNDER DRAIN CLIP

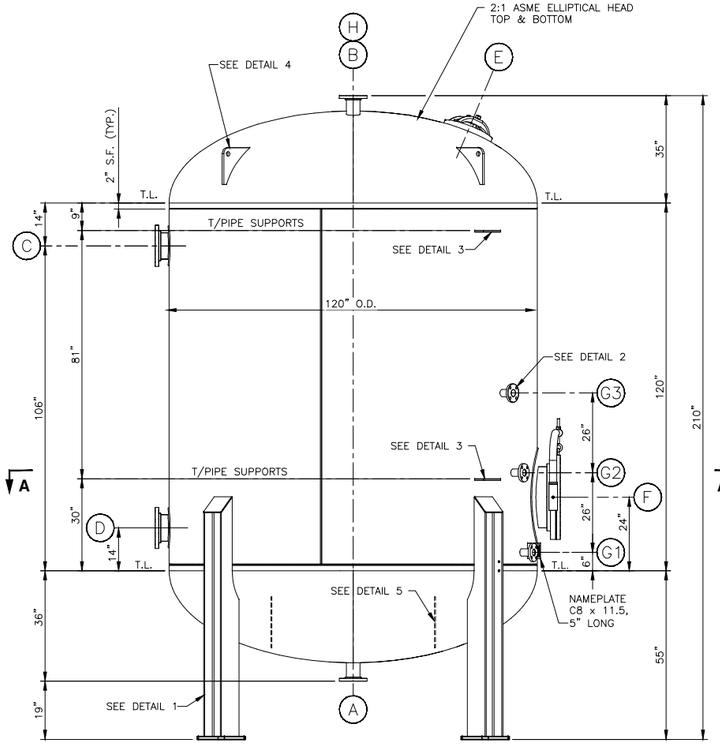

ELEVATION
SEE PLAN FOR TRUE ORIENTATION

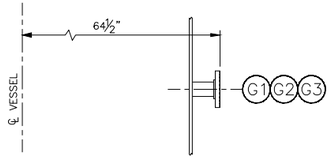

DETAIL 2
SAMPLE POINT
(3) REQ'D

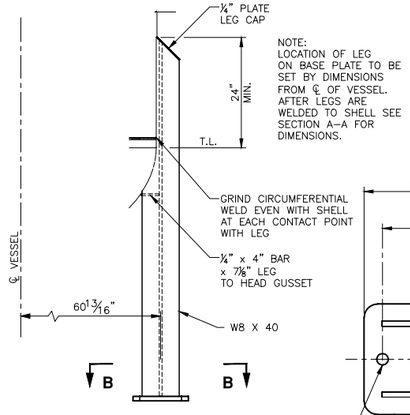

DETAIL 1
VESSEL SUPPORT LEG
(4) REQ'D

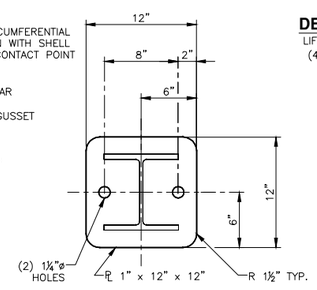

SECTION B-B
BASE PLATE
(4) REQ'D

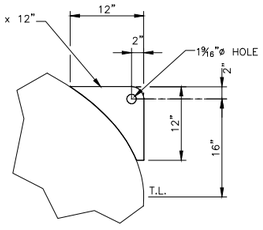

DETAIL 4
LIFTING LUG
(4) REQ'D

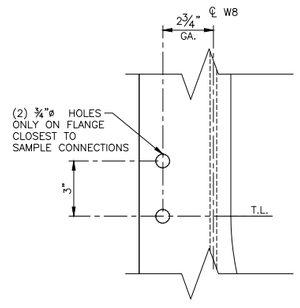

DETAIL 6
AT LEG LOCATED AT 45° ONLY

VESSEL DESCRIPTION	VESSEL PV-1 & PV-2
REFERENCES	VESSEL SPECIFICATION VS1
DESIGN CONDITIONS	125 PSIG @ 140° F
OPERATING CONDITIONS	
PROCESS FLUID	WATER, S.G. = 1.0
WALL THICKNESS	PER CODE REQUIREMENTS
MATERIALS OF CONSTRUCTION	SHELL: SA-516 GR. 70
	TOP HEAD: SA-516 GR. 70
	BOT. HEAD: SA-516 GR. 70
	NOZZLES: SA-106 GR. B (UNLESS NOTED)
	FLANGES: SA-105 (UNLESS NOTED)
	LINING: PLASITE 4110 35-45 MIL NOMINAL DFT PER CCC SPEC. VS-7
	FORCE CURED PER NSF 61 CRITERIA: NO
	SUPPORTS: A-992
	BOLTING: MANWAY: A-325 GR 1, GALVANIZED NOZZLES: A-307 GR B, ZINC PLATED
	GASKETS: EPDM (45-55 DUROMETER)
TYPE CONSTRUCTION	FUSION WELDED
CORROS. ALLOW	NONE
CODE	ASME SECTION VIII, DIVISION 1, LATEST EDITION
INSPECTION	BY CALGON & CODE AGENCY
STAMPING	ASME "U", NBR
TESTING	HYDROSTATIC PER CODE
STRESS RELIEF	PER CODE
RADIOGRAPH	PER CODE AND CALGON CALCULATIONS
NAMEPLATE	ASME
STENCILS	LINED TANK - DO NOT WELD OR BURN
SEISMIC LOAD	IBC 2006, Ss = 1.65, SITE CLASS D, I = 1.25
INSULATION	NONE - SEE NOTE 6
SURFACE PREP	EXTERIOR: BRUSH BLAST PER SSPC-SP7
	INTERIOR: WHITE METAL BLAST PER SSPC-SP5
PAINTING	5-7 MILS DFT, PER CCC SPEC. RS-17. THE COLOR SHALL MATCH SHERWIN-WILLIAMS SW4026, SLATE GRAY.
CAPACITIES	FULL: 8,900 GAL
	OPERATING: 8,900 GAL AT 100% FILL
	MEDIA: 20,000 LBS.
WEIGHTS	EMPTY: 16,500 LBS.
	FULL H_2O: 91,000 LBS.
	FULL PRODUCT: 36,500 LBS. (DRY CARBON)
	OPERATING: 102,000 LBS.

NOZZLE SCHEDULE

MARK	REQ'D	SIZE	DRILLING	FACING	DESCRIPTION
A	1	4"	150#	F.F.	CARBON OUTLET
B	1	4"	150#	F.F.	CARBON INLET/VENT
C	1	8"	150#	F.F.	INFLUENT
D	1	8"	150#	F.F.	EFFLUENT
E	1	14X18	ELLIP.		MANWAY W/ ¼" THK. GASKET
F	1	20"	150#	F.F.	MANWAY W/BLIND FLANGE & GASKET
G	3	2"	150#	F.F.	SAMPLE POINT
H	1	2"	150#	F.F.	VENT

NOTES:

1. ALL INTERIOR WELDS & EDGES TO BE GROUND TO 1/8" RADIUS MIN.
2. ALL NOZZLES MUST BE FLUSH ON INSIDE OF SHELL, U.O.N
3. 20" MANWAY FLG. TO BE SECURED WITH (2) BOLTS. REMAINDER OF BOLTS & NUTS TO BE PACKAGED AND SHIPPED IN THE CRATE.
4. REMOVE ALL WATER & DIRT AFTER HYDROTEST.
5. REMOVE ALL WELD SPATTER.
6. CONTACT CCC FOR HEAT TRACE REQUIREMENTS.
7. ALL FLANGE BOLT HOLES TO STRADDLE CENTERLINES.
8. FOR MANWAY DETAIL SEE DWG. 90110066.

REV	DESCRIPTION	APP	DATE
B	UPDATE SEPTA CCC SPEC IN BOM	RES	2/9/2016
A	SUBMIT FOR APPROVAL	RES	12/23/2015

REVISIONS

TOLERANCES (unless otherwise specified)

ANGULAR	±0°30'	DECIMAL (2 PLACES)	±.010
FRACTIONAL	±1/16"	DECIMAL (3 PLACES)	±.005
DECIMAL (1 PLACE)	±.015	DECIMAL (4 PLACES)	±.0005

THIS DRAWING AND DESIGN IS THE PROPERTY OF CALGON CARBON CORPORATION AND IS NOT TO BE REPRODUCED IN WHOLE OR IN PART NOR EMPLOYED FOR ANY PURPOSE OTHER THAN SPECIFICALLY PERMITTED IN WRITING BY CALGON CARBON CORPORATION. THIS DRAWING LOANED SUBJECT TO RETURN ON DEMAND.

	NAME	DATE
DRAFTER	JPARRISH	12/18/2015
DESIGNER		
CHECKER		
APPROVAL		
PROJECT No.	CTO.150010.KRTAF	

CalgonCarbon

CLIENT: KIRTLAND AFB ALBUQUERQUE, NM

TITLE: MODEL 10, 125 PSIG 10 FT DIA. VESSEL ARRANGEMENT

DWG. Size	SHEET No.	SCALE
D	1 OF 2	NONE

DWG. No. 91157781 REV. B

V:\2015\CTO.150010.KRTAF\Drawings\Equipment\91157781 PV1 Ves Arrgt.dwg Feb 09, 2016 - 1:21pm

BILL OF MATERIAL					
ITEM	QTY.	DESCRIPTION	MATERIAL	SAP No.	CCC SPEC
1	80	SEPTA	PPL	---	B 22.106
2	1	DECAL, DANGER, MANWAY	---	1058401	---
3	2	DECAL, CALGON LOGO	---	1059524	---
4	2	DECAL, LINED TANK	---	1025014	---
5	1	DECAL, DANGER, ELLIPTICAL MANWAY	---	1002706	---
6	1	GASKET, ELLIPTICAL 14" X 18" X ¼" THICK	WHITE EPDM	1053980	G46
7	1	GASKET, 20", 150#, ¼" THICK	WHITE EPDM	1054140	G46
8	20	BOLT, 1 ⅛" X 5" LG, HVY. HEX W/ NUT, GALVANIZED	A-325 GR 1	1060550	---

MATERIAL FOR ONE VESSEL, TWO REQUIRED

NOTES:

1.) LOCATE MANWAY DANGER DECALS ITEMS (2) & (5) AS SHOWN.

2.) LOCATE LINED TANK DECALS ITEM (4) NEAR BOTTOM WELD SEAM TO CLEAR PIPING.

3.) LOCATE CCC LOGOS ITEM (3) AT 0° & 180°, HEIGHT AS SHOWN.

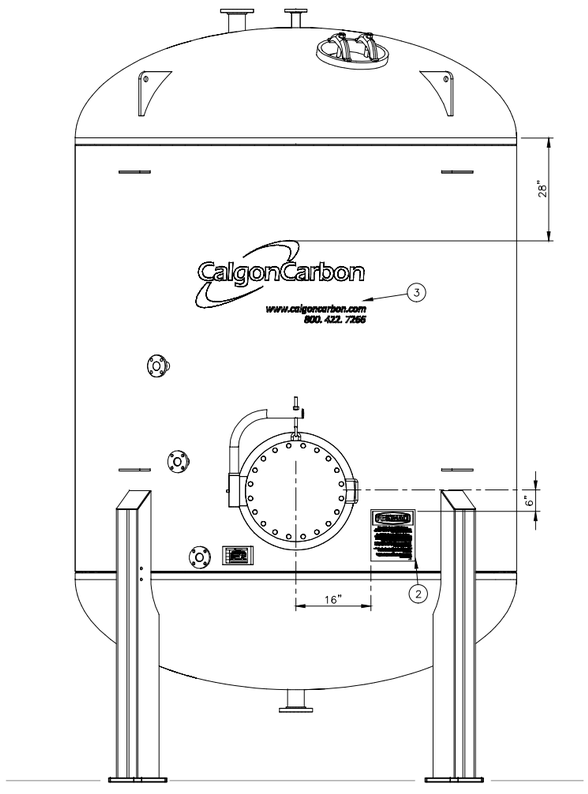

FRONT ELEVATION

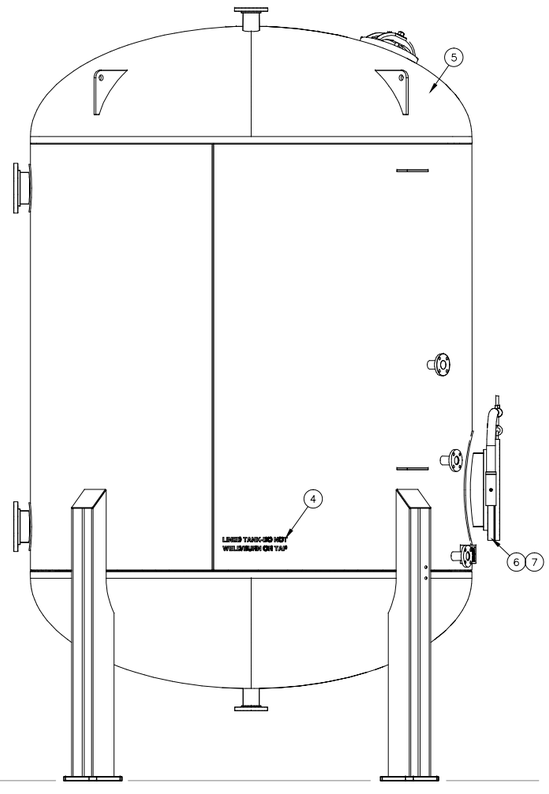

RIGHT ELEVATION

THIS DRAWING AND DESIGN IS THE PROPERTY OF CALGON CARBON CORPORATION AND IS NOT TO BE REPRODUCED IN WHOLE OR IN PART NOR EMPLOYED FOR ANY PURPOSE OTHER THAN SPECIFICALLY PERMITTED IN WRITING BY CALGON CARBON CORPORATION. THIS DRAWING LOANED SUBJECT TO RETURN ON DEMAND.

	NAME	DATE
DRAFTER	JPARRISH	12/18/2015
DESIGNER		
CHECKER		
APPROVAL		
PROJECT No.	CTO.150010.KRTAF	

REV	DESCRIPTION	APP	DATE
B	UPDATE SEPTA CCC SPEC IN BOM	RES	2/9/2016
A	SUBMIT FOR APPROVAL	RES	12/23/2015

REVISIONS

TOLERANCES (unless otherwise specified)

ANGULAR	±0°30'	DECIMAL (2 PLACES)	±.010
FRACTIONAL	±1/16"	DECIMAL (3 PLACES)	±.005
DECIMAL (1 PLACE)	±.015	DECIMAL (4 PLACES)	±.0005

CalgonCarbon

CLIENT: KIRTLAND AFB
ALBUQUERQUE, NM

TITLE: MODEL 10, 125 PSIG
10 FT DIA.
VESSEL ARRANGEMENT

DWG. Size	SHEET No.	SCALE
D	2 OF 2	NONE

DWG. No. 91157781 REV. B

V:\2015\CTO.150010.KRTAF\Drawings\Equipment\91157781 PV1 Ves Arrgt.dwg Feb 09, 2016 - 1:21pm

TRANSMITTAL DOCUMENT

Date:	**4-7-16**	**From:**	**Ed Butler**
To:	**EA Engineering, Science, and Technology, Inc.,** **320 Gold Ave. SW, Suite 1300** **Albuquerque, NM 87102** **Devon Jercinovic**	**Job Name:**	**Kirtland AFB, NM** **Bulk Fuels Facility**
		Reference:	
		Transmittal Method:	**E-mail**
		Sent By:	**Ed Butler**

Submittal	Dwg. Number	Item Description
3 Rev. 1a	14075-001-PI-03-400002	Bag Filter Skids

Ed Butler
TECHSAS, Inc.
4819 West Bayshore Drive
Bacliff, TX 77518

"I hereby certify that the (equipment) (material) (article) shown and marked in this submittal is that proposed to be incorporated with the Contract, is in compliance with the contract drawings and specification, can be installed in the allocated spaces, and is submitted for Contractor approval.

Certified by _____.
(Signature when applicable) Date: _____.

Review Comments and Responses:

1. Pump and Bag Filter item numbers should be updated for to 200's expansion equipment. For Example: P-118 to P-218.

    a. All references to 100 series have been revised to 200 series on drawings and specifications.

2. The discharge pump P-218 has been changed to a Gould Model 3196 MTi 3 x 4-10H with a 20 hp TEFC motor.

Kirtland Air Force Base
Albuquerque, New Mexico

Project: Bulk Fuels Facility

Bag Filter Skids (Submittal 3 Revision 1a)

Owner:	**Kirtland Air Force Base** **US Army Corps of Engineers**
Owner's Agent:	**EA Engineering, Science, and Technology, Inc.,** **320 Gold Ave. SW, Suite 1300** **Albuquerque, NM 87102**
Engineer:	**EA Engineering, Science, and Technology, Inc.,** **320 Gold Ave. SW, Suite 1300** **Albuquerque, NM 87102**
General Contractor:	**TECHSAS, Inc.** **4819 West Bayshore Drive** **Bacliff, TX 77518**
Construction Management:	**USA Environment, LP** **316 Georgia Ave** **Deer Park, TX 77536**

TABLE OF CONTENTS

Description:

- **Fliteway Submittal Package**

Fliteway Technologies, Inc.

Submittals

Q14617R2

TECHSAS, Inc.

Kirtland AFB

2129 E. Birchwood Avenue, Cudahy, WI 53110

(414) 483-5600 (800) 236-3580 Fax: (414) 483-1957

Q14617R2
TECHSAS, Inc.
Kirtland AFB

Index

Section 1 – Equipment Specifications
- Submittals
- Serial Numbers – Provided at completion
- Bill of Materials – Provided at completion
- Warranty

Section 2 – Engineering Drawings
- Feed Pump Skid Layout and P&ID
- Treated Water Pump Skid Layout and P&ID
- Ladder Diagram
- One Line Electrical Diagram

Section 3 – Test Data
- Provided at completion

Section 4 – Instrumentation for Groundwater Treatment Feed Tank
- Equipment specifications

Section 5 – Instrumentation for Treated Water Storage Tank
- Equipment specifications – See Groundwater Treatment Feed Tank Section

Section 6– Feed Pump Skid
- Feed Pump Skid Layout and P&ID
- Equipment specifications

Section 7 – Feed Pump VFD – Control Panel
- Ladder Diagram
- One Line Electrical Diagram
- Equipment specifications

Section 8 – Treated Water Pump Skid
- Treated Water Pump Skid Layout and P&ID
- Equipment specifications – See Feed Pump Skid Section

Section 9 – Treated Water Pump VFD- Control Panel
- Ladder Diagram
- One Line Electrical Diagram
- Equipment specifications – See Feed Pump VFD – Control Panel section

Fliteway Technologies, Inc.
2129 East Birchwood Ave.• Cudahy, WI 53110
(414) 483-5600 • 1-800-236-3580 • FAX (414) 483-1957

Q14617R2

TECHSAS, Inc.

Equipment Skids for Kirtland AFB Project

- **Instrumentation for the 6,000 Gallon Groundwater Treatment Feed Tank (Tank supplied by others)**
  - One (1) Rosemount 3051L Liquid Level Indicating Transmitter
  - Two (2) Flotect 304SS Liquid level switches

- **Instrumentation for the 6,000 Gallon Treated Water Storage Tank (Tank supplied by others)**
  - One (1) Rosemount 3051L Liquid Level Indicating Transmitter
  - Two (2) Flotect 304SS Liquid level switches

- **One (1) Feed Pump Skid**

  - Steel Base Skid (approximately 6' by 10') with Forklift pockets and Bolt down Tabs

  - Two (2) Gould ANSI Centrifugal Pumps (P-212A P-212B)
    - Gould ANSI Model 3196 STi 2x3-6 with 15 HP TEFC Motors (Inverter Rated) each rated for 200 GPM at 100 TDH
    - Each with ITT Smart Temperature/Vibration /Run Time Monitor and Alert
      Note: Pumps require in-field final shaft alignments and coupling installation after piped to system.
    - Pumps plumbed in Parallel with 4" Steel piping with Valves and Expansion joints
      - Ashcroft Pressure Gauge [P/N 45-1259-S-SL-04-60-#] (PI-3102) and Sample port
    - One (1) McCrometer 4" Flow Meter [P/N VM04QE03F-E1HS-V3] (40 to 900 GPM) with Local Display Transmitter and 4-20mA Output (FIT-3102)
    - Two (2) Silent Globe Valves

  - Two (2) VFD's installed in NEMA4 (High Voltage) Enclosure mounted and wired on Feed Pump Skid
    - One (1) 36" by 36" NEMA 4 Weigmann Enclosure and vent fan
    - Two (2) 20HP Allen-Bradley VFD's [20BD027A0AYNAND0] (SIC-3102A SIC-3102B)
      - Each with HIM Module / Remote Display [20HIMC3S] and Ether/IP COMM card [20-COMM-ER]
    - Two (2) 5% Line Reactors [1321-3R35-C]

  - Two (2) each ISC Model LR6304FAC15 Multi-Round Liquid Bag Filter Housings (F-212A/B) each with:
    - Carbon Steel housing (holds six (6) #2 size 7" by 32" Filter Bags
    - Each Rated for 1,200 GPM with 26.4 sq. ft. filtering area

- 4” Flanged Inlet / Discharge Ports
- 1” NPT drain
- Buna N Seals on lid and baskets, differential, drain, and vent ports
- Two part epoxy finish
- Davit cover lift
- Heavy Duty Legs
- HH Pressure Switch with weather cover [Dwyer A1F-PC-SS-1-2] (PSHH-3102)
- Two (2) Differential Pressure Indicators [45-1130SL-25-30#] across the bag filters (PDI-3102A/B)
- Bag Filters plumbed in parallel with 4” Steel piping with valves

- One (1) NEMA 4 Junction Box (Low Voltage) prewired with terminal strips to facilitate wiring to System Control Panels
- Factory Functional and Pressure Tested

- **One (1) Treated Water Pump Skid**

- Steel Base Skid (approximately 6’ by 10’) with Forklift pockets and Bolt down Tabs

- One (1) Gould ANSI Centrifugal Pump (P-218)
  - Gould ANSI Model 3196 MTi 3x4-10H with 20 HP TEFC Motor (Inverter Rated)
  - With ITT Smart Temperature/Vibration /Run Time Monitor and Alert
    Note: Pump requires in-field final shaft alignments and coupling installation after piped to system.
  - Pump plumbed with 4” Steel piping with Valves and Expansion joints
  - Ashcroft Pressure Gauge [P/N 45-1259-S-SL-04-100-#] (PI-3108) and Sample port
  - One (1) McCrometer 4” Flow Meter [VM04QE03F-E1HS-V3] (40 to 900 GPM) with Local Display Transmitter and 4-20mA Output (FIT-3108)
  - Two (2) Silent Globe Valves

- One (1) VFD Installed in NEMA4 (High Voltage) Enclosure mounted and wired on Treated Water Pump Skid
  - One (1) 36” by 36” NEMA 4 Weigmann Enclosure and vent fan
  - One (1) 25HP Allen-Bradley VFD [20BD034A0AYNAND0] (SIC-3108)
    - With HIM Module / Remote Display [20HIMC3S] and Ether/IP COMM card [20-COMM-ER]
  - One (1) 5% Line Reactor [1321-3R35-C]

- Two (2) each ISC Model LR6304FAC15 Multi-Round Liquid Bag Filter Housings (F-218 A/B) each with:
  - Carbon Steel housing (holds six (6) #2 size 7” by 32” Filter Bags
  - Each Rated for 1,200 GPM with 26.4 sq. ft. filtering area
  - 4” Flanged Inlet / Discharge Ports
  - 1” NPT drain
  - Buna N Seals on lid and baskets, differential, drain, and vent ports
  - Two part epoxy finish
  - Davit cover lift
  - Heavy Duty Legs

- HH Pressure Switch with weather cover [Dwyer A1F-PC-SS-1-2] (PSHH-3108)
- Two (2) Differential Pressure indicators [45-1130SL-25-30#] across the bag filters (PDI-3108A/B)
- Bag Filters plumbed in parallel with 4" Steel piping with valves

- One (1) NEMA 4 Junction Box (Low Voltage) prewired with terminal strips to facilitate wiring to System Control Panel.
- Factory Functional and Pressure Tested

- **O&M Supplies**
  - One (1) Box of 50 #2 Size 10 Micron Bags for Bag Filters

- **Four (4) Day On-Site Installation Assistance by Fliteway (Includes travel time and expenses)**

- **Four (4) Day On-Site Startup Assistance by Fliteway with final pump alignment by local pump service company (Includes travel time and expenses)**

Freight to Kirtland AFB, NM (partial load flat bed)

Serial Numbers
provided at completion

Bill of Materials provided at completion

Fliteway Technologies, Inc.
2129 East Birchwood Ave., Cudahy, WI 53110
(414) 483-5600 • 1-800-236-3580 • FAX (414) 483-1957

WARRANTY

ONE YEAR LIMITED WARRANTY- Fliteway Technologies, Inc. remediation equipment is warranted by Fiteway to the original user against defects in workmanship or materials under normal use for one year after date of shipment. Exceptions to this are positive displacement vacuum pumps and blowers which have 18 Month warranties direct from the original manufacturer (Roots and Sutorbilt only). Any part determined by Fliteway Technologies, Inc. to be defective in material or workmanship and returned to Fliteway Technologies, Inc., shipping costs prepaid, will be repaired or replaced at Fliteway's option, as the exclusive remedy. See PROMPT DISPOSITION below for limited warranty claim procedures. This limited warranty gives the purchaser specific legal rights which may vary from state to state.

LIMITATIONS OF LIABILITY- To the extent allowable under applicable law, Fliteway's liability (or incidental and consequential damages is expressly disclaimed. Fliteway's liability in all events is limited to, and shall not exceed, the purchase price.

PRODUCT SUITABILITY - Many states and localities have regulations and codes governing sales, construction, installation, and/or use of products for certain purposes, which may vary from those in neighboring areas. While Fliteway Technologies, Inc. attempts to assure that its products comply with such codes, it cannot guarantee compliance, and cannot be responsible for how the product is installed or used. Before purchase and use of a product, please determine local and national codes and regulations, review the product application, and verify that the product, installation and use comply with those regulations and codes.

PROMPT DISPOSITION - Fliteway Technologies, Inc. will make every effort for a prompt correction or other adjustment with respect to any product which proves to be defective within the limited warranty. For any product believed to be defective within limited warranty, first write or call Fliteway Technologies, Inc. giving the model and serial number of tile unit and describing the nature of the defect. Title and risk of loss pass to the buyer on delivery to common carrier. If product was damaged in transit to you, file a claim with carrier. Freight of postage charges on returns to the factory are at the customer's expense. If returned product is returned under warranty, the manufacturer will cover return freight.

Fliteway Technologies, Inc.

Engineering Drawings

2129 E. Birchwood Avenue, Cudahy, WI 53110

(414) 483-5600 (800) 236-3580 Fax: (414) 483-1957

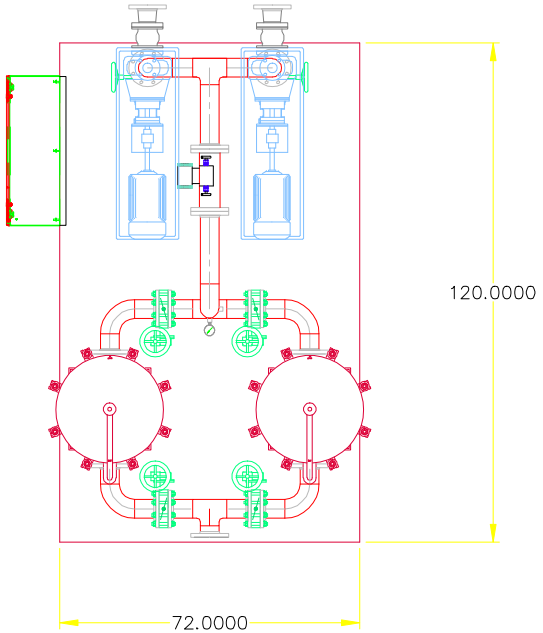

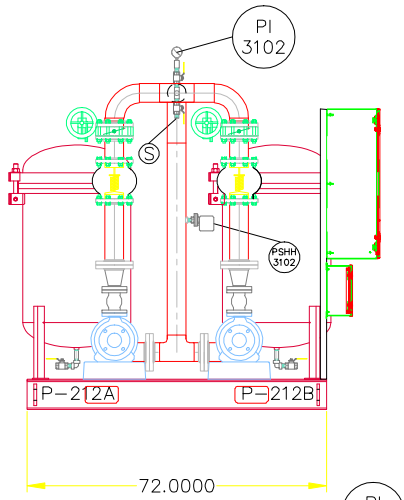

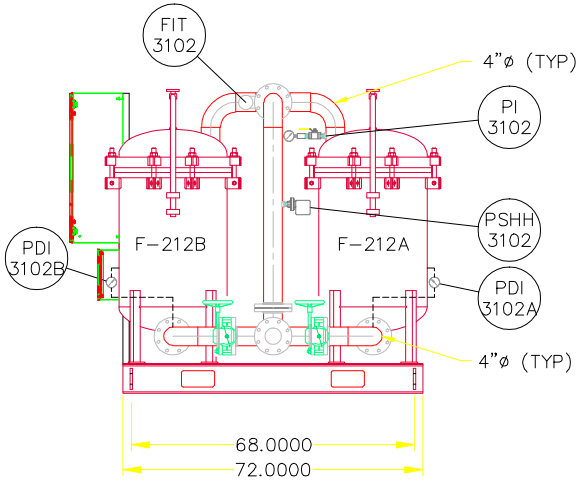

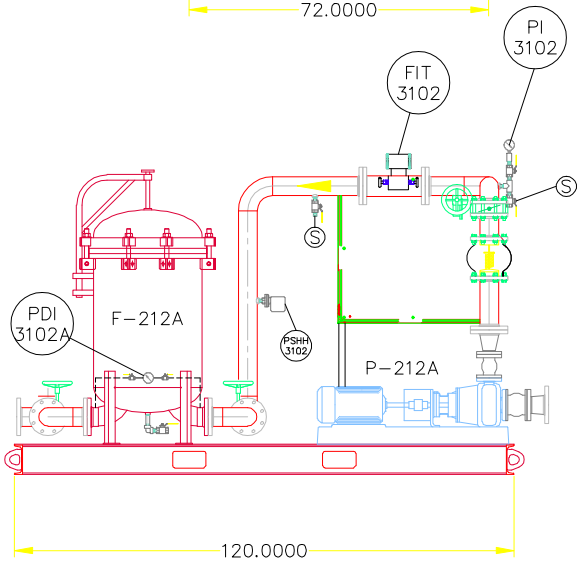

THIS DRAWING IS THE PROPERTY OF
Fliteway Technologies, Inc
2129 EAST BIRCHWOOD AVE
CUDAHY WI, 53110
414.483.5600 414.483.1957
AND IS NOT TO BE REPRODUCED WITHOUT WRITTEN PERMISSION

6'X10' FEED PUMP SKID

TECHSAS INC.
KIRTLAND AFB

3/25/16	SIZE	FSCM NO.	DWG NO. Q14617
	SCALE NONE		SHEET 1 OF 1

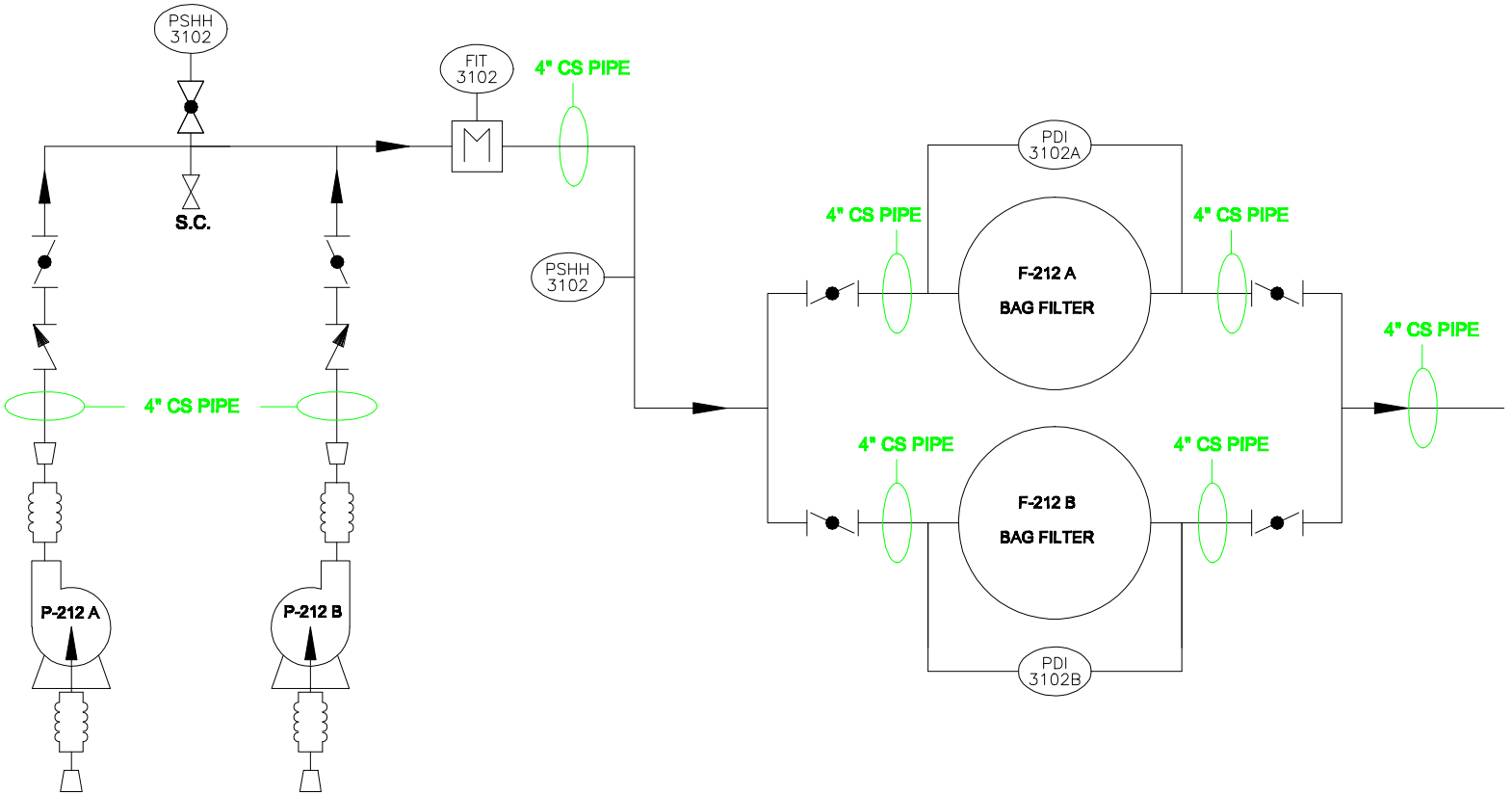

CONCENTRIC REDUCER

S.C. SAMPLE CONNECTION/PORT

CHECK VALVE

BALL VALVE

EXPANSION JOINT

BUTTERFLY VALVE

THIS DRAWING IS THE PROPERTY OF
Fliteway Technologies, Inc
2129 EAST BIRCHWOOD AVE
CUDAHY WI, 53110
414.483.5600 414.483.1957
AND IS NOT TO BE REPRODUCED WITHOUT WRITTEN PERMISSION

3/25/16

6'X10' FEED PUMP P&ID

TECHSAS INC.
KIRTLAND AFB

SIZE	FSCM NO.	DWG NO.
		Q14617

SCALE NONE

SHEET 1 OF 1

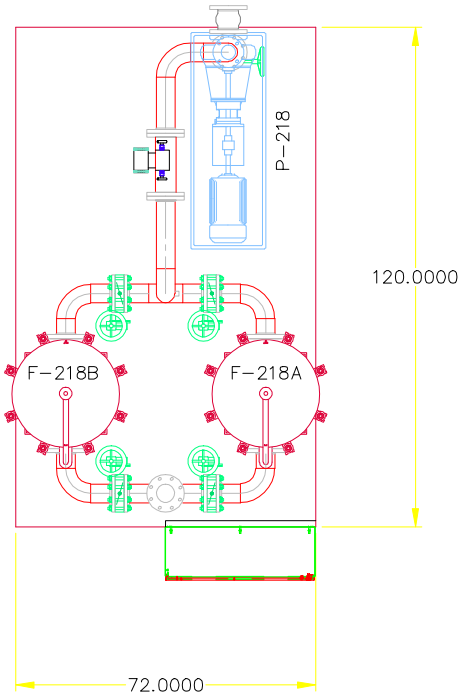

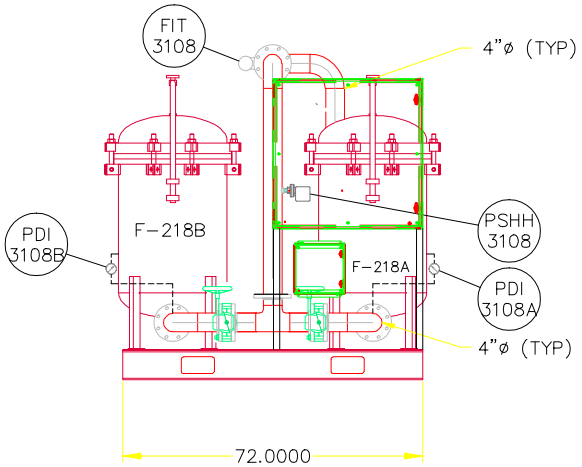

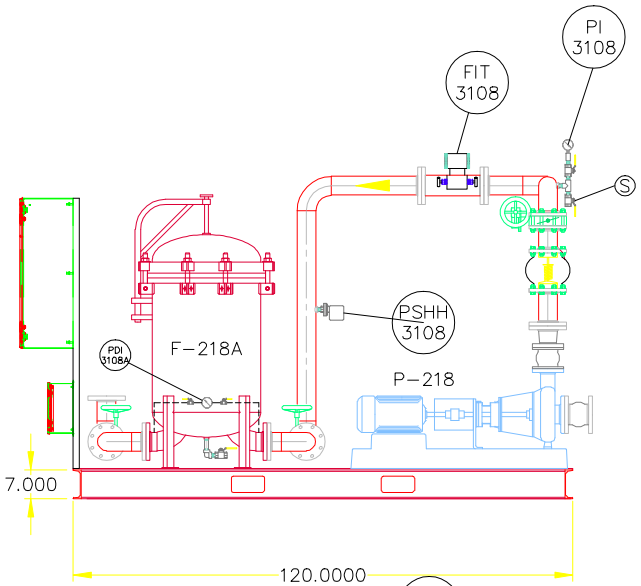

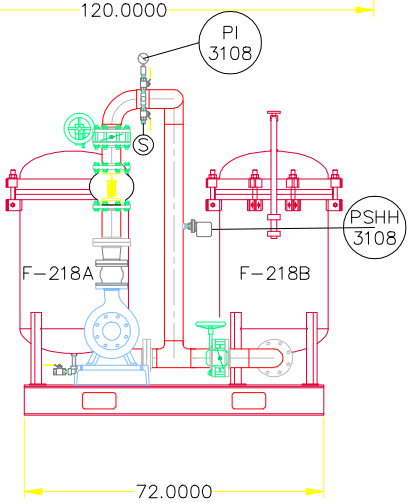

THIS DRAWING IS THE PROPERTY OF
Fliteway Technologies, Inc
2129 EAST BIRCHWOOD AVE
CUDAHY WI, 53110
414.483.5600 414.483.1957
AND IS NOT TO BE REPRODUCED
WITHOUT WRITTEN PERMISSION

6'X10' TREATED WATER PUMP SKID

TECHSAS INC.
KIRTLAND AFB

3/25/16	SIZE	FSCM NO.	DWG NO. Q14617
	SCALE NONE		SHEET 1 OF 1

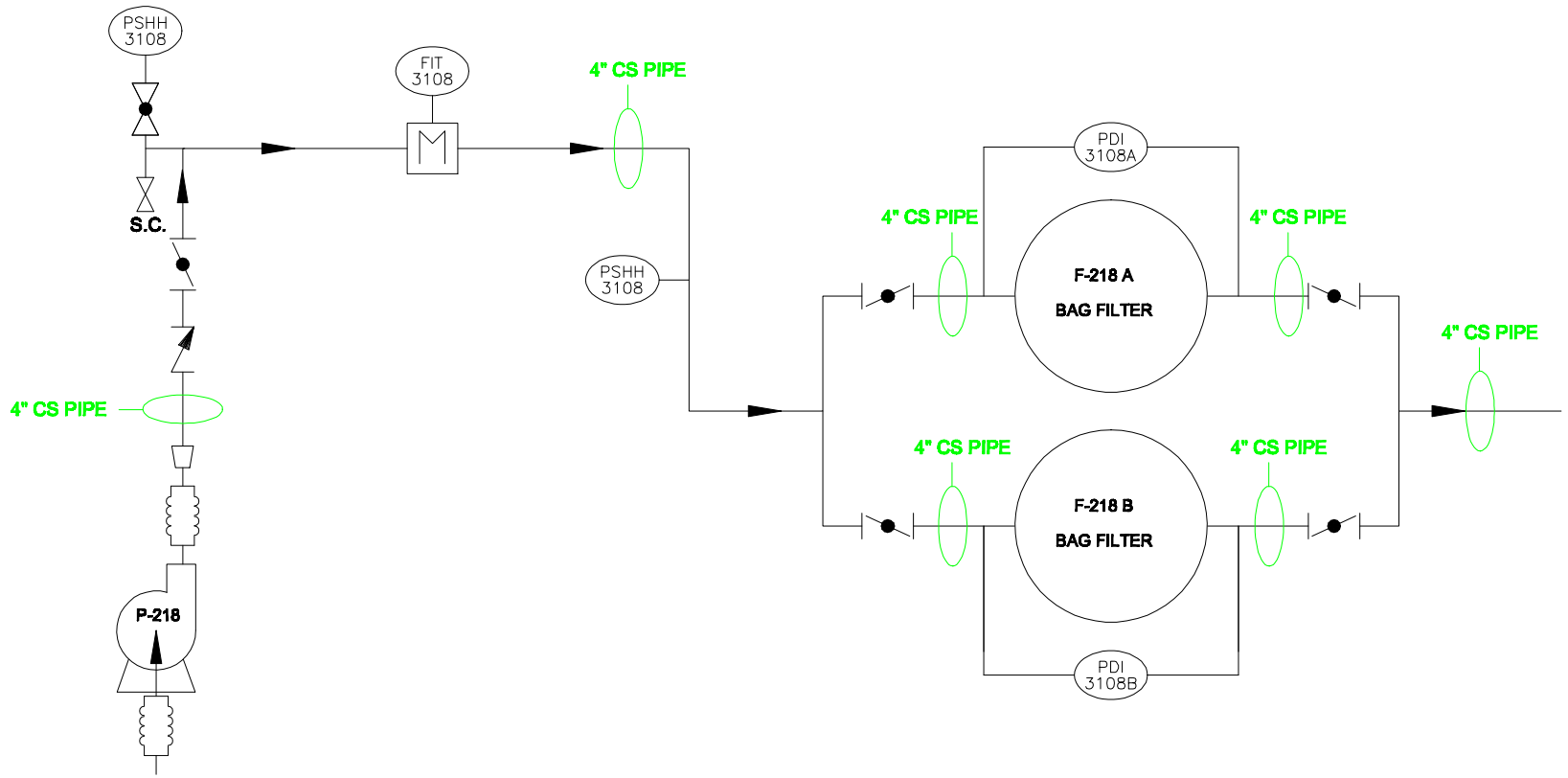

CONCENTRIC REDUCER

S.C. SAMPLE CONNECTION/PORT

CHECK VALVE

BALL VALVE

EXPANSION JOINT

BUTTERFLY VALVE

THIS DRAWING IS THE PROPERTY OF
Fliteway Technologies, Inc
2129 EAST BIRCHWOOD AVE
CUDAHY WI, 53110
414.483.5600 414.483.1957
AND IS NOT TO BE REPRODUCED WITHOUT WRITTEN PERMISSION

3/25/16

6'X10' TREATED WATER P&ID

TECHSAS INC.
KIRTLAND AFB

SIZE	FSCM NO.	DWG NO.
		Q14617

SCALE NONE

SHEET 1 OF 1

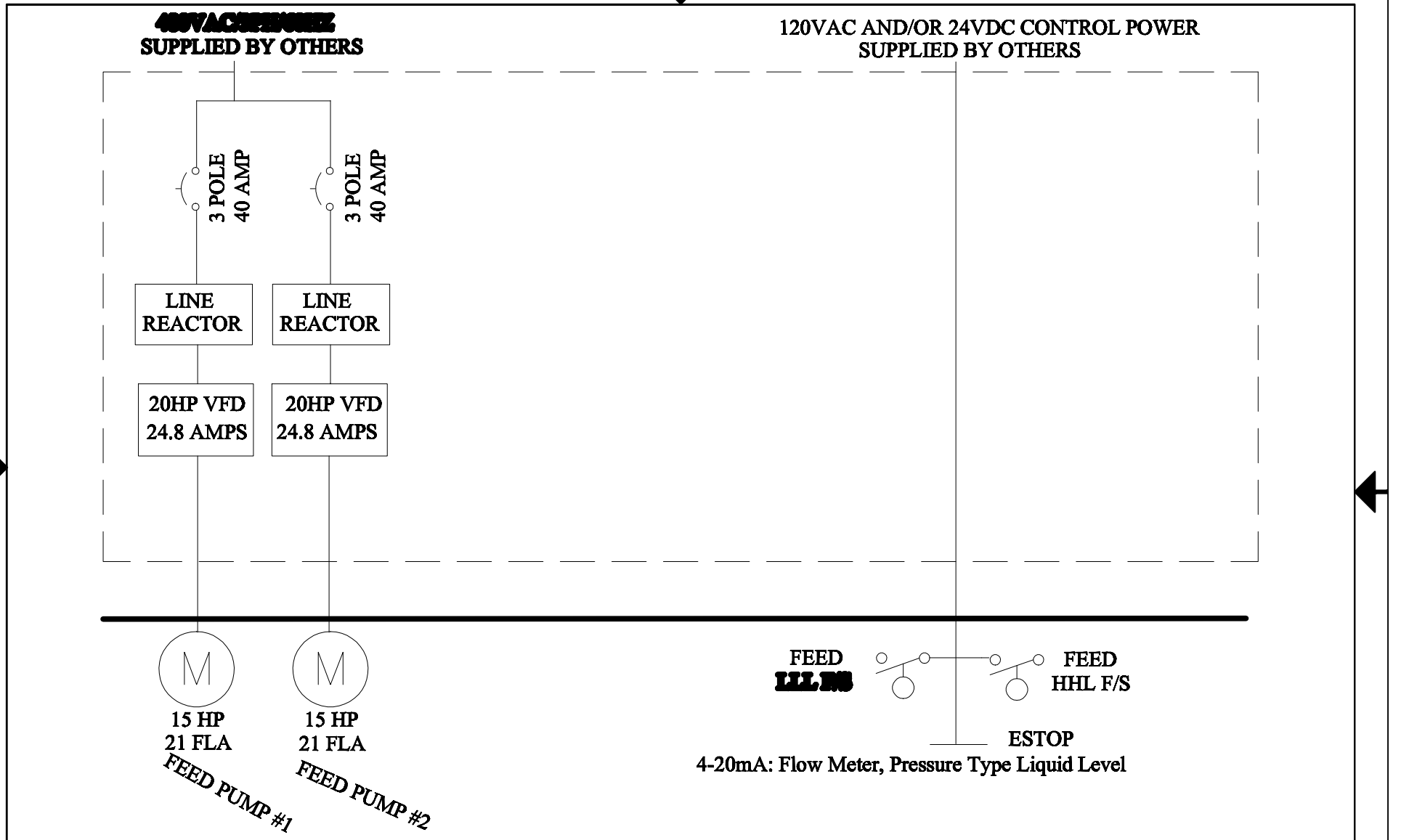

THIS DRAWING IS THE PROPERTY OF
Fliteway Technologies, Inc
2129 East Birchwood Avenue
Cudahy, WI 53110
414.483.5600 414.483.1957
AND IS NOT BE REPRODUCED
WITHOUT WRITTEN PERMISSION

ONE LINE ELECTRICAL DIAGRAM

FEED PUMP SKID

4/6/16

TECHSAS, Inc

SIZE	FSCM NO.	DWG NO.	REV
		Q14617	2

SCALE NONE | SHEET

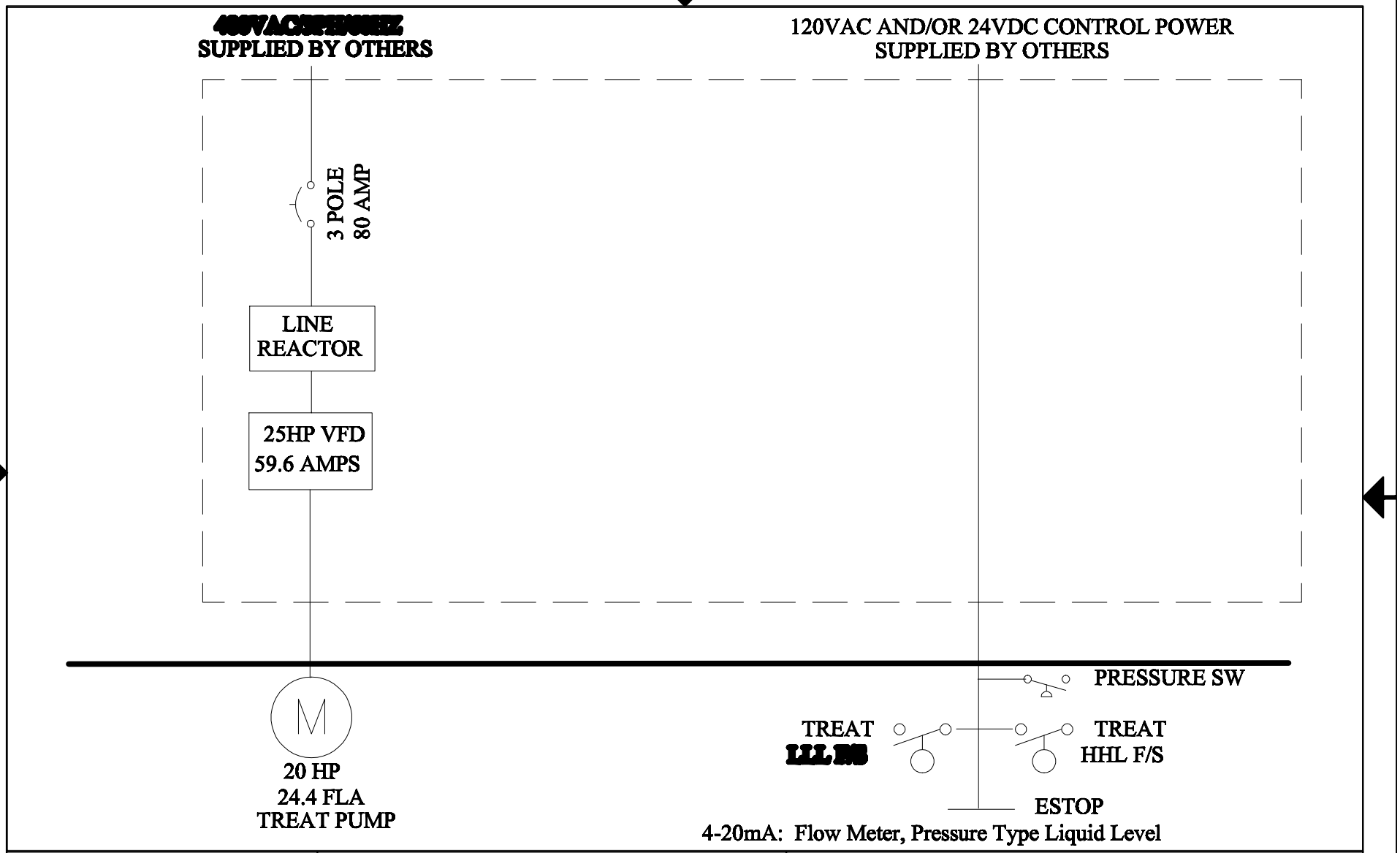

THIS DRAWING IS THE PROPERTY OF
Fliteway Technologies, Inc
2129 East Birchwood Avenue
Cudahy, WI 53110
414.483.5600 414.483.1957
AND IS NOT BE REPRODUCED
WITHOUT WRITTEN PERMISSION

ONE LINE ELECTRICAL DIAGRAM

TREAT PUMP SKID

4/6/16

TECHSAS, Inc

SIZE	FSCM NO.	DWG NO.	REV
		Q14617	2

SCALE NONE | SHEET

FEED PUMP SKID #1

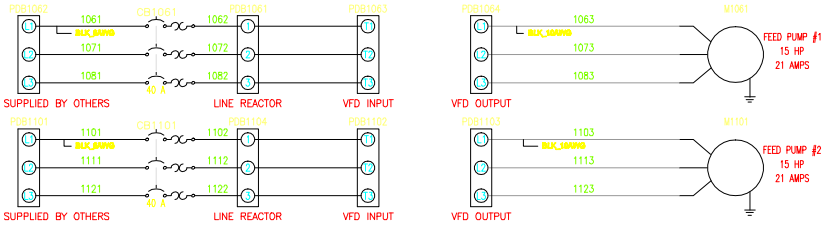

HIGH VOLTAGE PANEL

VFD FEED PUMP #1 WIRING

VFD_TB_12	VFD FAULT - PROVIDED OVER ETHERNET
VFD_TB_13	
VFD_TB_15	VFD RUNNING - PROVIDED OVER ETHERNET
VFD_TB_16	
VFD_TB_25	N
VFD_TB_28	120VAC VFD RUN SIGNAL (FROM MCP)

VFD FEED PUMP #2 WIRING

VFD_TB_12	VFD FAULT - PROVIDED OVER ETHERNET
VFD_TB_13	
VFD_TB_15	VFD RUNNING - PROVIDED OVER ETHERNET
VFD_TB_16	
VFD_TB_25	N
VFD_TB_28	120VAC VFD RUN SIGNAL (FROM MCP)

LOW VOLTAGE JUNCTION BOX

LOW VOLTAGE JBOX

HHL_F/S	120VAC OR 24VDC CONTROL POWER
HHL_F/S	TANK HHL ALARM (DRY CONTACT)
LL_F/S	
LL_F/S	TANK LLL (DRY CONTACT)
PRS._SW	
PRS._SW	HIGH PRESSURE SWITCH ALARM (N.O. DRY CONTACT)
FLOW_METER	24VDC CONTROL POWER
FLOW_METER	FLOW METER 4-20mA SIGNAL
FLOW_METER	FLOW METER SHIELD WIRE
P1_THRM_OL	120VAC CONTROL POWER
P1_THRM_OL	FEED PUMP #1 MOTOR THERMAL OVERLOAD WIRED TO VFD, VIEWED OVER ETHERNET
P2_THRM_OL	
P2_THRM_OL	FEED PUMP #2 MOTOR THERMAL OVERLOAD WIRED TO VFD, VIEWED OVER ETHERNET
LVL_TRANS	24VDC CONTROL POWER
LVL_TRANS	LEVEL TRANSMITTER 4-20mA SIGNAL
LVL_TRANS	LEVEL TRANSMITTER SHIELD WIRE

TREAT WATER PUMP SKID #2

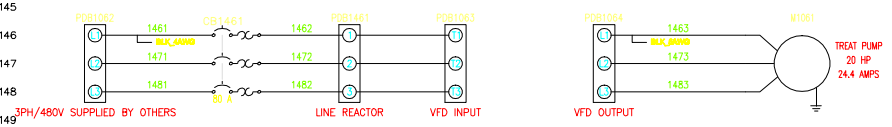

HIGH VOLTAGE PANEL

VFD TREAT PUMP WIRING

VFD_TB_12	VFD FAULT - PROVIDED OVER ETHERNET
VFD_TB_13	
VFD_TB_15	VFD RUNNING - PROVIDED OVER ETHERNET
VFD_TB_16	
VFD_TB_25	N
VFD_TB_28	120VAC VFD RUN SIGNAL (FROM MCP)

LOW VOLTAGE JUNCTION BOX

LOW VOLTAGE JBOX

HHL_F/S	120VAC OR 24VDC CONTROL POWER
HHL_F/S	TANK HHL ALARM (DRY CONTACT)
LL_F/S	
LL_F/S	TANK LLL (DRY CONTACT)
PRS._SW	
PRS._SW	HIGH PRESSURE SWITCH ALARM (N.O. DRY CONTACT)
FM_24V	24VDC CONTROL POWER
FM_TR	FLOW METER 4-20mA SIGNAL
FM_S	FLOW METER SHIELD WIRE
TP_THRM_OL	120VAC CONTROL POWER
TP_THRM_OL	TREATMENT PUMP MOTOR THERMAL OVERLOAD WIRED TO VFD, VIEWED OVER ETHERNET
LVL_TRANS	24VDC CONTROL POWER
LVL_TRANS	LEVEL TRANSMITTER 4-20mA SIGNAL
LVL_TRANS	LEVEL TRANSMITTER SHIELD WIRE

THIS PRINT AND ITS CONTENTS ARE THE PROPERTY OF FLITEWAY AND MUST NOT BE USED FOR ANY PURPOSE NOT AUTHORIZED BY FLITEWAY. DO NOT DISCLOSE, REPRODUCE OR OTHERWISE USE THIS PRINT OR ITS CONTENTS IN ANY MANNER DETRIMENTAL TO THE INTEREST OF FLITEWAY WITHOUT FLITEWAY'S PRIOR WRITTEN CONSENT. FLITEWAY RESERVES ALL RIGHTS OF DESIGN AND INVENTION TO THE EXTENT PERMITTED BY LAW.

CAD SYSTEM	ACADE
SCALE	1:1
UNITS	IN
FORMAT	D

Fliteway Technologies, Inc.
2129 East Birchwood Ave.
Cudahy, WI 53110

DRAWN BY	Josh
Q #	Q14617 R2
DESIGNED FOR	TECHSAS, Inc.
DESCRIPTION	
Drawing Number	

PLOTTED : 12-16-2014

Fliteway Technologies, Inc.

Test Data

2129 E. Birchwood Avenue, Cudahy, WI 53110

(414) 483-5600 (800) 236-3580 Fax: (414) 483-1957

Test Data provided at completion

Fliteway Technologies, Inc.

Instrumentation for Groundwater Treatment Feed Tank

2129 E. Birchwood Avenue, Cudahy, WI 53110

(414) 483-5600 (800) 236-3580 Fax: (414) 483-1957

Product Data Sheet
September 2014
00813-0100-4001, Rev SA

Rosemount 3051 Pressure Transmitter

With the Rosemount 3051 Pressure Transmitter, you'll gain more control over your plant. You'll be able to reduce product variation and complexity as well as your total cost of ownership by leveraging one device across a number of pressure, level and flow applications. You'll have access to information you can use to diagnose, correct and even prevent issues. And with unparalleled reliability and experience, the Rosemount 3051 is the industry standard that will help you perform at higher levels of efficiency and safety so you can remain globally competitive.

ROSEMOUNT

EMERSON.
Process Management

Setting the Standard for Pressure Measurement

Proven best-in-class performance, reliability and safety

- Over 7 million installed
- Reference accuracy 0.04% of span
- Installed total performance of 0.14% of span
- 10-year stability of 0.2% of URL
- SIL2/3 certified (IEC 61508)

Maximize installation and application flexibility with the coplanar platform

- Improve reliability and performance with integrated DP Flowmeters, DP Level solutions and integral manifolds
- Easy installation with all solutions fully assembled, leak-tested and calibrated
- Meet your application needs with an unsurpassed offering

Advanced functionality

Power advisory diagnostics

- Detect on-scale failures caused by electrical loop issues before they impact your process operation
- This capability is safety certified for your most critical applications

Local operator interface

- Straightforward menus and built-in configuration buttons allow you commission the device in less than a minute
- Configure in hazardous-area locations without removing the transmitter cover using external buttons

Contents

Rosemount 3051C Coplanar™ Pressure Transmitter 4
Rosemount 3051T In-Line Pressure Transmitter 11
Rosemount 3051CF Flowmeter Selection Guide 17
Rosemount 3051CFA Annubar Flowmeter 18
Rosemount 3051CFC Compact Flowmeter 26
Rosemount 3051CFP Integral Orifice Flowmeter 32
Rosemount 3051L Level Transmitter 38
Specifications 45
3051 Product Certifications 56
Pipe I.D. Range Codes 64
Rosemount 3051 Dimensional Drawings 66
Options 80

Industry leading capabilities extended to IEC 62591 (*Wireless*HART®)

- Cost effectively implement wireless on the industry's most proven platform
- Optimize safety with the industry's only intrinsically safe power module
- Eliminate wiring design and construction complexities to lower costs by 40-60%
- Quickly deploy new pressure, level and flow measurements in 70% less time

Innovative, integrated DP Flowmeters

- Fully assembled, configured, and leak tested for out-of-the-box installation
- Reduce straight pipe requirements, lower permanent pressure loss and achieve accurate measurement in small line sizes
- Up to 1.65% volumetric flow accuracy at 8:1 turndown

Proven, reliable, and innovative DP Level Technologies

- Connect to virtually any process with a comprehensive offering of process connections, fill fluids, direct mount or capillary connections and materials
- Quantify and optimize total system performance with QZ option
- Operate at higher temperature and in vacuum applications
- Optimize level measurement with cost efficient Rosemount Tuned-System™ Assemblies

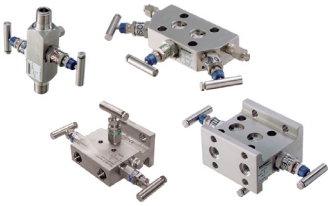

Instrument manifolds – quality, convenient, and easy

- Designed and engineered for optimal performance with Rosemount transmitters
- Save installation time and money with factory assembly
- Offers a variety of styles, materials and configurations

Rosemount 3051L Level Transmitter

3051L Level Transmitter

The Rosemount 3051L Level Transmitter combines the performance and capabilities of Rosemount 3051 Transmitters with the reliability and quality of a direct mount seal in one model number. 3051L Level Transmitters offer a variety of process connections, configurations, and fill fluid types to meet a breadth of level applications. Capabilities of a Rosemount 3051L Level Transmitter include:

- Quantify and optimize total system performance (Option code **QZ**)
- Tuned-System Assembly (Option code **S1**)
- Power Advisory can proactively detect degraded electrical loop integrity issues (Option Code **DA0**)
- Local Operator Interface with straightforward menus and built-in configuration buttons (Option Code **M4**)

See Specifications and options for more details on each configuration. Specification and selection of product materials, options, or components must be made by the purchaser of the equipment. See page 54 for more information on Material Selection.

Additional information:
Specifications: page 45
Certifications: page 56
Dimensional Drawings: page 66

Table 6. Rosemount 3051L Level Transmitter Ordering Information

★ The Standard offering represents the most common options. The starred options (★) should be selected for best delivery. The Expanded offering is subject to additional delivery lead time.

Model	Transmitter type			
3051L[1]	Level Transmitter			
Pressure range				
2	–250 to 250 inH_2O (-621,60 to 621,60 mbar)			★
3	–1000 to 1000 inH_2O (-2,48 to 2,48 bar)			★
4	–300 to 300 psi (-20,68 to 20,68 bar)			★
Transmitter output				
A[2]	4–20 mA with Digital Signal Based on HART Protocol			★
F	FOUNDATION fieldbus Protocol			★
W[3]	PROFIBUS PA Protocol			★
X[4]	Wireless (requires wireless options and engineered polymer housing)			★
M[5]	Low-Power 1-5 Vdc with Digital Signal Based on HART Protocol			
Process connection size, material, extension length (high side)				
Code	**Process connection size**	**Material**	**Extension length**	
G0[6]	2-in./DN 50/A	316L SST	Flush Mount Only	★
H0[6]	2-in./DN 50	Alloy C-276	Flush Mount Only	★
J0	2-in./DN 50	Tantalum	Flush Mount Only	★
A0[6]	3-in./DN 80	316L SST	Flush Mount	★
A2[6]	3-in./DN 80	316L SST	2-in./50 mm	★
A4[6]	3-in./DN 80	316L SST	4-in./100 mm	★

Table 6. Rosemount 3051L Level Transmitter Ordering Information

★ The Standard offering represents the most common options. The starred options (★) should be selected for best delivery.
The Expanded offering is subject to additional delivery lead time.

A6[6]	3-in./DN 80	316L SST	6-in./150 mm	★
B0[6]	4-in./DN 100	316L SST	Flush Mount	★
B2[6]	4-in./DN 100	316L SST	2-in./50 mm	★
B4[6]	4-in./DN 100	316L SST	4-in./100 mm	★
B6[6]	4-in./DN 100	316L SST	6-in./150 mm	★
C0[6]	3-in./DN 80	Alloy C-276	Flush Mount	★
C2[6]	3-in./DN 80	Alloy C-276	2-in./50 mm	★
C4[6]	3-in./DN 80	Alloy C-276	4-in./100 mm	★
C6[6]	3-in./DN 80	Alloy C-276	6-in./150 mm	★
D0[6]	4-in./DN 100	Alloy C-276	Flush Mount	★
D2[6]	4-in./DN 100	Alloy C-276	2-in./50 mm	★
D4[6]	4-in./DN 100	Alloy C-276	4-in./100 mm	★
D6[6]	4-in./DN 100	Alloy C-276	6-in./150 mm	★
E0	3-in./DN 80	Tantalum	Flush Mount Only	★
F0	4-in./DN 100	Tantalum	Flush Mount Only	★
Mounting flange size, rating, material (high side)				
	Size	**Rating**	**Material**	
M	2-in.	ANSI/ASME B16.5 Class 150	CS	★
A	3-in.	ANSI/ASME B16.5 Class 150	CS	★
B	4-in.	ANSI/ASME B16.5 Class 150	CS	★
N	2-in.	ANSI/ASME B16.5 Class 300	CS	★
C	3-in.	ANSI/ASME B16.5 Class 300	CS	★
D	4-in.	ANSI/ASME B16.5 Class 300	CS	★
P	2-in.	ANSI/ASME B16.5 Class 600	CS	★
E	3-in.	ANSI/ASME B16.5 Class 600	CS	★
X[6]	2-in.	ANSI/ASME B16.5 Class 150	316 SST	★
F[6]	3-in.	ANSI/ASME B16.5 Class 150	316 SST	★
G[6]	4-in.	ANSI/ASME B16.5 Class 150	316 SST	★
Y[6]	2-in.	ANSI/ASME B16.5 Class 300	316 SST	★
H[6]	3-in.	ANSI/ASME B16.5 Class 300	316 SST	★
J[6]	4-in.	ANSI/ASME B16.5 Class 300	316 SST	★
Z[6]	2-in.	ANSI/ASME B16.5 Class 600	316 SST	★
L[6]	3-in.	ANSI/ASME B16.5 Class 600	316 SST	★
Q	DN 50	PN 10-40 per EN 1092-1	CS	★
R	DN 80	PN 40 per EN 1092-1	CS	★
S	DN 100	PN 40 per EN 1092-1	CS	★
V	DN 100	PN 10/16 per EN 1092-1	CS	★
K[6]	DN 50	PN 10-40 per EN 1092-1	316 SST	★
T[6]	DN 80	PN 40 per EN 1092-1	316 SST	★
U[6]	DN 100	PN 40 per EN 1092-1	316 SST	★

Table 6. Rosemount 3051L Level Transmitter Ordering Information

★ The Standard offering represents the most common options. The starred options (★) should be selected for best delivery.
The Expanded offering is subject to additional delivery lead time.

Mounting flange size, rating, material (high side)				
	Size	**Rating**	**Material**	
W[6]	DN 100	PN 10/16 per EN 1092-1	316 SST	★
7[6]	4 in.	ANSI/ASME B16.5 Class 600	316 SST	★
1	N/A	10K per JIS B2238	CS	
2	N/A	20K per JIS B2238	CS	
3	N/A	40K per JIS B2238	CS	
4[6]	N/A	10K per JIS B2238	316 SST	
5[6]	N/A	20K per JIS B2238	316 SST	
6[6]	N/A	40K per JIS B2238	316 SST	

Seal fill fluid (high side)		**Specific gravity**	**Temperature limits [ambient temperature of 70° F (21° C)]**	
D	Silicone 200	0.93	-49 to 401 °F (-45 to 205 °C)	★
F	Silicone 200 for Vacuum Applications	0.93	For use in vacuum applications below 14.7 psia (1 bar-a), refer to vapor pressure curves in Rosemount DP Level Fill Fluid Specification Technical Note (00840-2100-4016).	★
L	Silicone 704	1.07	32 to 401 °F (0 to 205 °C)	★
C	Silicone 704 for Vacuum Applications	1.07	For use in vacuum applications below 14.7 psia (1 bar-a), refer to vapor pressure curves in Rosemount DP Level Fill Fluid Specification Technical Note (00840-2100-4016).	★
R	Silicone 705	1.09	68 to 401 °F (20 to 205 °C)	★
V	Silicone 705 for Vacuum Applications	1.09	For use in vacuum applications below 14.7 psia (1 bar-a), refer to vapor pressure curves in Rosemount DP Level Fill Fluid Specification Technical Note (00840-2100-4016).	★
A	SYLTHERM™ XLT	0.85	-102 to 293 °F (-75 to 145 °C)	★
H	Inert (Halocarbon)	1.85	-49 to 320 °F (-45 to 160 °C)	★
G	Glycerine and Water	1.13	5 to 203 °F (-15 to 95 °C)	★
N	Neobee® M-20	0.92	5 to 401 °F (-15 to 205 °C)	★
P	Propylene Glycol and Water	1.02	5 to 203 F (-15 to 95 °C)	★

Low pressure side					
	Configuration	**Flange adapter**	**Diaphragm material**	**Sensor fill fluid**	
11[6]	Gage	SST	316L SST	Silicone	★
21	Differential	SST	316L SST	Silicone	★
22[6]	Differential	SST	Alloy *C-276*	Silicone	★
2A[7]	Differential	SST	316L SST	Inert (Halocarbon)	★
2B[6][7]	Differential	SST	Alloy *C-276*	Inert (Halocarbon)	★
31[6]	Tuned-System Assembly with Remote Seal	None	316L SST	Silicone (requires Option Code S1)	★

Table 6. Rosemount 3051L Level Transmitter Ordering Information

★ The Standard offering represents the most common options. The starred options (★) should be selected for best delivery. The Expanded offering is subject to additional delivery lead time.

O-ring			
A	Glass-filled PTFE		★
Housing material		**Conduit entry size**	
A	Aluminum	½–14 NPT	★
B	Aluminum	M20 × 1.5	★
J	SST	½–14 NPT	★
K	SST	M20 × 1.5	★
P[8]	Engineered polymer	No conduit entries	★
D[9]	Aluminum	G½	
M[9]	SST	G½	

Wireless options (requires Wireless Output Code X and Engineered Polymer Housing Code P)

Wireless transmit rate, operating frequency, and protocol		
WA3	User Configurable Transmit Rate, 2.4GHz *Wireless*HART	★
Antenna and SmartPower		
WP5	Internal Antenna, Compatible with Green Power Module (I.S. Power Module Sold Separately)	★

HART Revision configuration (requires HART Protocol Output Code A)

HR5[2]	Configured for HART Revision 5	★
HR7[2]	Configured for HART Revision 7	★

Options (include with selected model number)

Extended product warranty		
WR3	3-year limited warranty	★
WR5	5-year limited warranty	★
PlantWeb control functionality		
A01[10]	FOUNDATION fieldbus Control Function Block Suite	★
PlantWeb diagnostic functionality		
DA0[18]	Power Advisory HART Diagnostic	★
D01[10]	FOUNDATION fieldbus Diagnostics Suite	★
Seal assemblies		
S1[11]	Assembled to One Rosemount 1199 Seal	★
Product certifications		
E8	ATEX Flameproof and Dust Certification	★
I1[12]	ATEX Intrinsic Safety and Dust	★
IA	ATEX FISCO Intrinsic Safety; for FOUNDATION fieldbus or PROFIBUS PA protocols only	★
N1	ATEX Type n Certification and Dust	★
K8	ATEX Flameproof, Intrinsic Safety, Type n, Dust (combination of E8, I1 and N1)	★
E4[13]	TIIS Flameproof	★
E5	FM Explosion-proof, Dust Ignition-proof	★
I5[14]	FM Intrinsically Safe, Nonincendive	★
IE	FM FISCO Intrinsically Safe; for FOUNDATION fieldbus or PROFIBUS PA protocols only	★
K5	FM Explosion-proof, Dust Ignition-Proof, Intrinsically Safe, and Division 2	★

Table 6. Rosemount 3051L Level Transmitter Ordering Information

★ The Standard offering represents the most common options. The starred options (★) should be selected for best delivery. The Expanded offering is subject to additional delivery lead time.

C6	CSA Explosion-proof, Dust Ignition-proof, Intrinsically Safe, and Division 2	★
I6[8]	CSA Intrinsic Safety	★
K6	CSA and ATEX Explosion-proof, Intrinsically Safe, and Division 2 (combination of C6, E8, and I1)	★
E7	IECEx Flameproof, Dust Ignition-proof	★
I7	IECEx Intrinsic Safety	★
N7	IECEx Type n Certification	★
K7	IECEx Flameproof, Dust Ignition-proof, Intrinsic Safety, and Type n (combination of I7, N7 and E7)	★
E2	INMETRO Flameproof	★
I2	INMETRO Intrinsic Safety	★
IB	INMETRO FISCO intrinsically safe; for FOUNDATION fieldbus or PROFIBUS PA protocols only	★
K2	INMETRO Flameproof, Intrinsic Safety	★
E3	China Flameproof	★
I3	China Intrinsic Safety	★
N3	China Type n	★
EM	Technical Regulations Customs Union (EAC) Flameproof	★
IM	Technical Regulations Customs Union (EAC) Intrinsic Safety	★
KM	Technical Regulations Customs Union (EAC) Flameproof and Intrinsic Safety	★
KB	FM and CSA Explosion-proof, Dust Ignition Proof, Intrinsically Safe, and Division 2 (combination of K5 and C6)	★
KD	FM, CSA, and ATEX Explosion-proof, Intrinsically Safe (combination of K5, C6, I1, and E8)	★
Shipboard approvals		
SBS[7]	American Bureau of Shipping	★
SBV[7] [15]	Bureau Veritas (BV)	
SDN[7]	Det Norske Veritas	
SLL[7][15]	Lloyds Register (LR)	
Bolting material		
L4	Austenitic 316 SST Bolts	★
L5	ASTM A 193, Grade B7M bolts	★
L6	Alloy K-500 Bolts	★
L8	ASTM A 193 Class 2, Grade B8M Bolts	★
Display and interface options		
M4[16]	LCD Display with Local Operator Interface	★
M5	LCD Display	★
Calibration certification		
Q4	Calibration Certificate	★
QP	Calibration Certificate and tamper evident seal	★
QG[17]	Calibration Certificate and GOST Verification Certificate	★
Material traceability certification		
Q8	Material Traceability Certification per EN 10204 3.1	★
Quality certification for safety		
QS[18]	Prior-use certificate of FMEDA data	★
QT[18]	Safety certified to IEC 61508 with certificate of FMEDA	★

Table 6. Rosemount 3051L Level Transmitter Ordering Information

★ The Standard offering represents the most common options. The starred options (★) should be selected for best delivery.
The Expanded offering is subject to additional delivery lead time.

Toolkit total system performance reports				
QZ	Seal System Performance Calculation Report			★
Conduit electrical connector				
GE[7]	M12, 4-pin, Male Connector (eurofast)			★
GM[7]	A size Mini, 4-pin, Male Connector (minifast)			★
Configuration buttons				
D4[18]	Analog Zero and Span			★
DZ[19]	Digital Zero Trim			★
Transient protection				
T1[7][20]	Transient Protection			★
Software configuration				
C1[19]	Custom Software Configuration (completed CDS 00806-0100-4007 for wired and 00806-0100-4100 for wireless required with order)			★
Low power output				
C2	0.8-3.2 Vdc Output with Digital Signal Based on HART Protocol (available with Output code M only)			
Alarm levels				
C4[18]	NAMUR alarm and saturation levels, high alarm			★
CN[18]	NAMUR alarm and saturation levels, low alarm			★
CR[18]	Custom alarm and saturation signal levels, high alarm (requires C1 and Configuration Data Sheet)			★
CS[18]	Custom alarm and saturation signal levels, low alarm (requires C1 and Configuration Data Sheet)			★
CT[18]	Rosemount Standard low alarm			★
Conduit plug				
DO[7]	316 SST Conduit Plug			★
Ground screw				
V5[7][21]	External Ground Screw Assembly			★
Lower housing flushing connection options				
	Ring material	**Number**	**Size (NPT)**	
F1	316 SST	1	1/4-18 NPT	★
F2	316 SST	2	1/4-18 NPT	★
F3	Alloy C-276	1	1/4-18 NPT	★
F4	Alloy C-276	2	1/4-18 NPT	★
F7	316 SST	1	1/2-14 NPT	★
F8	316 SST	2	1/2-14 NPT	★
F9	Alloy C-276	1	1/2-14 NPT	★
F0	Alloy C-276	2	1/2-14 NPT	★
Lower housing intermediate gasket material				
S0	No Gasket for lower housing			★
SY[22]	Thermo-Tork TN-9000			★

Table 6. Rosemount 3051L Level Transmitter Ordering Information

★ The Standard offering represents the most common options. The starred options (★) should be selected for best delivery.
The Expanded offering is subject to additional delivery lead time.

NACE certificate		
Q15[23]	Certificate of Compliance to NACE MR0175/ISO 15156 for wetted materials	★
Q25[23]	Certificate of Compliance to NACE MR0103 for wetted materials	★
Typical model number: 3051L 2 A A0 D 21 A A F1		

(1) Select Configuration Buttons (option code D4 or DZ) or Local Operator Interface (option code M4) if local configuration buttons are required.

(2) Option HR5 configures the HART output to HART Revision 5. Option HR7 configures the HART output to HART Revision 7. The device can be field configured to HART Revision 5 or 7 if desired. HART Revision 5 is the default HART output.

(3) Option code M4 - LCD Display with Local Operator Interface required for local addressing and configuration.

(4) Requires wireless options and engineered polymer housing. Available approvals are FM Intrinsically Safe, (option code I5), CSA Intrinsically Safe (option code I6), ATEX Intrinsic Safety (option code I1), IECEx Intrinsic Safety (option code I7) and EAC Intrinsic Safety (option code IM).

(5) Only available with C6, E2, E5, I5, K5, KB and E8 approval. Not available with GE, GM, SBS, DA0, M4, D4, DZ, QT, HR5, HR7, CR, CS, CT.

(6) Materials of Construction comply with metallurgical requirements highlighted within NACE MR0175/ISO 15156 for sour oil field production environments. Environmental limits apply to certain materials. Consult latest standard for details. Selected materials also conform to NACE MR0103 for sour refining environments.

(7) Not available with Wireless output (output code X).

(8) Only available with Wireless output (output code X).

(9) Not available with Product certifications options E8, K8, E5, K5, C6, K6, E7, K7, E2, K2, E3, KB, KD.

(10) Only valid with FOUNDATION fieldbus output (output code F).

(11) “Assemble-to” items are specified separately and require a completed model number.

(12) Dust approval not applicable to output code X. See “IEC 62591 (WirelessHART Protocol)” on page 62 for wireless approvals.

(13) Only available with output codes A - 4-20mA HART, F - FOUNDATION fieldbus, and W - PROFIBUS PA. Also only available with G1/2 housing thread types.

(14) Nonincendive certification not provided with Wireless output option code (X).

(15) Only available with product certifications E7, E8, I1, I7, IA, K7, K8, KD, N1, N7.

(16) Not available with FOUNDATION fieldbus (Output Code F) or Wireless output (Output Code X) or Low Power (Output Code M).

(17) Contact an Emerson Process Management representative for availability.

(18) Only available with HART 4-20 mA output (output code A).

(19) Only available with 4-20 mA HART output (Output Code A) and Wireless output (Output Code X).

(20) The T1 option is not needed with FISCO Product Certifications; transient protection is included in the FISCO product certification codes IA, IB, and IE.

(21) The V5 option is not needed with the T1 option; external ground screw assembly is included with the T1 option.

(22) Gasket provided when lower housing is ordered.

(23) NACE compliant wetted materials are identified by Footnote 6.

Specifications

Performance specifications

This product data sheet covers HART, Wireless, FOUNDATION fieldbus, and PROFIBUS PA protocols unless specified.

Conformance to specification [±3σ (Sigma)]

Technology leadership, advanced manufacturing techniques, and statistical process control ensure specification conformance to at least ±3σ.

Reference accuracy

Stated reference accuracy equations include terminal based linearity, hysteresis, and repeatability. For wireless, FOUNDATION fieldbus and PROFIBUS PA devices, use calibrated range in place of span.

Models	Rosemount 3051and *Wireless*HART
3051C Range 5	+/-0.065% of span For spans less than 10:1, accuracy = $\pm\left[0.015 + 0.005\left(\frac{URL}{Span}\right)\right]$% of Span
Ranges 2-4	± 0.04% of span(1) For spans less than 10:1(2), accuracy = $\pm\left[0.015 + 0.005\left(\frac{URL}{Span}\right)\right]$% of Span
Range 1	± 0.10% of span For spans less than 15:1, accuracy = $\pm\left[0.025 + 0.005\left(\frac{URL}{Span}\right)\right]$% of Span
Range 0 (CD)	± 0.10% of span For spans less than 2:1, accuracy = ± 0.05% of URL
3051CA Ranges 1-4	± 0.04% of span(1) For spans less than 10:1, accuracy = $\pm\left[0.0075\left(\frac{URL}{Span}\right)\right]$% of Span
3051T Ranges 1-4	± 0.04% of span(1) For spans less than 10:1, accuracy = $\pm\left[0.0075\left(\frac{URL}{Span}\right)\right]$% of Span
Range 5	± 0.075% of span For spans less than 10:1, accuracy = $\pm\left[0.0075\left(\frac{URL}{Span}\right)\right]$% of Span
3051L Ranges 2-4	± 0.075% of span For spans less than 10:1, accuracy = $\pm\left[0.025 + 0.005\left(\frac{URL}{Span}\right)\right]$% of Span

(1) For output code W and M, ±0.065% span.

(2) For output code F, for span less than 5:1.

Flow performance - flow reference accuracy(1)

3051CFA Annubar Flowmeter		
Ranges 2-3		±1.80% of Flow Rate at 8:1 flow turndown
3051CFC_A Compact Annubar Flowmeter – Annubar Option A		
Ranges 2-3	Uncalibrated	±2.10% of Flow Rate at 8:1 flow turndown
	Calibrated	±1.80% of Flow Rate at 8:1 flow turndown
3051CFC_C Compact Orifice Flowmeter – Conditioning Option C		
Ranges 2-3	β = 0.4	±1.75% of Flow Rate at 8:1 flow turndown
	β = 0.50, 0.65	±1.95% of Flow Rate at 8:1 flow turndown

Flow performance - flow reference accuracy[1]

3051CFC_P Compact Orifice Flowmeter – orifice type option P[2]		
Ranges 2-3	β = 0.4	±2.00% of Flow Rate at 8:1 flow turndown
	β = 0.65	±2.00% of Flow Rate at 8:1 flow turndown
3051CFP Integral Orifice Flowmeter		
Ranges 2-3	β <0.1	±3.00% of Flow Rate at 8:1 flow turndown
	0.1<β <0.2	±1.95% of Flow Rate at 8:1 flow turndown
	0.2<β <0.6	±1.75% of Flow Rate at 8:1 flow turndown
	0.6<β <0.8	±2.15% of Flow Rate at 8:1 flow turndown

(1) Accuracy over range of use is always application dependent. Range 1 flowmeters may experience an additional uncertainty up to 0.9%. Consult your Emerson Process Management Representative for exact specifications.

(2) Applicable to 2-in. to 12-in. line sizes. For smaller line sizes, see the Rosemount DP Flowmeters and Primary Elements PDS (00813-0100-4485).

Total performance

Total performance is based on combined errors of reference accuracy, ambient temperature effect, and static pressure effect at normal operating conditions (70% of span typical reading, 740 psi (51,02 bar) line pressure).

For ±50 °F (28 °C) temperature changes; 0-100% relative humidity, from 1:1 to 5:1 rangedown

Models	Total performance[1]
3051C Ranges 2-5	± 0.14% of span
3051T Ranges 1-4	± 0.14% of span
3051L Ranges 2-4	Use Instrument Toolkit™ or the QZ option to quantify the total performance of a remote seal assembly under operating conditions.

(1) For output code W, F and M, total performance is ±0.15% of span.

Long term stability

Models	Long term stability
3051C Ranges 2-5	±0.2% of URL for 10 years ±50 °F (28 °C) temperature changes, and up to 1000 psi (68,95 bar) line pressure.
3051CD, 3051CG Low/Draft Range Ranges 0-1	±0.2% of URL for 1 year
3051CA Low Range Range 1	±0.2% of URL for 10 years ±50 °F (28 °C) temperature changes, and up to 1000 psi (68,95 bar) line pressure.
3051T Ranges 1-4	±0.2% of URL for 10 years ±50 °F (28 °C) temperature changes, and up to 1000 psi (68,95 bar) line pressure.

Dynamic performance

	4 - 20 mA HART[1]	FOUNDATION fieldbus and PROFIBUS PA protocols[3]	Typical HART transmitter response time
Total Response Time ($T_d + T_c$)[2]:			
3051C Ranges 2-5	100 ms	152 ms	
Range 1	255 ms	307 ms	
Range 0	700 ms	N/A	
3051T	100 ms	152 ms	
3051L	See Instrument Toolkit	See Instrument Toolkit	
Dead Time (Td)	45 ms (nominal)	97 ms	
Update Rate[4]	22 times per second	22 times per second	

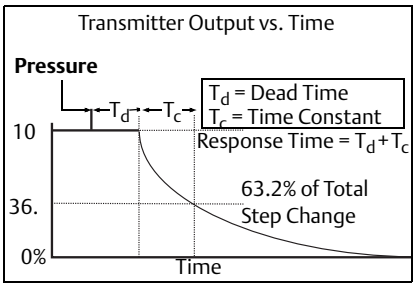

(1) Dead time and update rate apply to all models and ranges; analog output only.

(2) Nominal total response time at 75 °F (24 °C) reference conditions.
(3) Transducer block response time, Analog Input block execution time not included.
(4) Does not apply to wireless (output Code X). See "Wireless (output code X)" on page 52 for wireless update rate.

Line pressure effect per 1000 psi (68,95 bar)

For line pressures above 2000 psi (137,90 bar) and Ranges 4-5, see user manual (Document number 00809-0100-4007 for HART, 00809-0100-4100 for *Wireless*HART, 00809-0100-4774 for FOUNDATION fieldbus, and 00809-0100-4797 for PROFIBUS PA).

Models	Line pressure effect
3051CD, 3051CF	**Zero Error**
Ranges 2-3	±0.05% of URL/1000 psi (68,95 bar) for line pressures from 0 to 2000 psi (0 to 137,90 bar)
Range 1	±0.25% of URL/1000 psi (68,95 bar) for line pressures from 0 to 2000 psi (0 to 137,90 bar)
Range 0	±0.125% of URL/100 psi (6,89 bar) for line pressures from 0 to 750 psi (0 to 51,71 bar)
	Span Error
Ranges 2-3	±0.1% of reading/1000 psi (68,95 bar)
Range 1	±0.4% of reading/1000 psi (68,95 bar)
Range 0	±0.15% of reading/100 psi (68,95 bar)

Ambient temperature effect per 50 °F (28 °C)

Models	Ambient temperature effect
3051C Ranges 2-5	±(0.0125% URL + 0.0625% span) from 1:1 to 5:1 ±(0.025% URL + 0.125% span) from 5:1 to 150:1
Range 1	±(0.1% URL + 0.25% span) from 1:1 to 30:1 ±(0.14% URL + 0.15% span) from 30:1 to 50:1
Range 0	±(0.25% URL + 0.05% span) from 1:1 to 30:1
3051CA Ranges 1-4	±(0.025% URL + 0.125% span) from 1:1 to 30:1 ±(0.035% URL + 0.125% span) from 30:1 to 150:1
3051T Range 2-4	±(0.025% URL + 0.125% span) from 1:1 to 30:1 ±(0.035% URL + 0.125% span) from 30:1 to 150:1
Range 1	±(0.025% URL + 0.125% span) from 1:1 to 10:1 ±(0.05% URL + 0.125% span) from 10:1 to 100:1
Range 5	±(0.1% URL + 0.15% span) from 1:1 to 5:1
3051L	See Instrument Toolkit software.

Mounting position effects

Models	Mounting position effects
3051C	Zero shifts up to ±1.25 inH_2O (3,11 mbar), which can be calibrated out. No span effect.
3051CA, 3051T	Zero shifts up to ±2.5 inH_2O (6,22 mbar), which can be calibrated out. No span effect.
3051L	With liquid level diaphragm in vertical plane, zero shift of up to ±1 inH_2O (2,49 mbar). With diaphragm in horizontal plane, zero shift of up to ±5 inH_2O (12,43 mbar) plus extension length on extended units. All zero shifts can be calibrated out. No span effect.

Vibration effect

Less than ±0.1% of URL when tested per the requirements of IEC60770-1: 1999 field or pipeline with high vibration level (10-60 Hz 0.21 mm displacement peak amplitude / 60-2000 Hz 3g).

Power supply effect

Less than ±0.005% of calibrated span per volt change.

Electromagnetic compatibility (EMC)

Meets all relevant requirements of EN61326-1:2006 and Namur NE-21.(1)

(1) NAMUR NE-21 does not apply to wireless output code X.

Transient protection (option code T1)

Tested in accordance with IEEE C62.41.2-2002, Location Category B

6 kV crest (0.5 μs - 100 kHz)
3 kA crest (8 × 20 μs)
6 kV crest (1.2 × 50 μs)

Functional specifications

Range and sensor limits

Table 7. 3051CD, 3051CG, 3051CF, and 3051L Range and Sensor Limits

Range[1]	Minimum span	Range and sensor limits				
			Lower (LRL)			
	3051CD, 3051CG, 3051CF, 3051L[2]	Upper (URL)	3051CD differential 3051CF Flowmeters	3051CG gage[3]	3051L differential	3051L gage[3]
0	0.10 inH_2O (0,24 mbar)	3.00 inH_2O (7,45 mbar)	-3.00 inH_2O (-7,45 mbar)	N/A	N/A	N/A
1	0.50 inH_2O (1,24 mbar)	25.00 inH_2O (62,16 mbar)	-25.00 inH_2O (-62,16 mbar)	-25.00 inH_2O (-62,16 mbar)	N/A	N/A
2	1.67 inH_2O (4,15 mbar)	250.00 inH_2O (621,60 mbar)	-250.00 inH_2O (-621,60 mbar)	-250.00 inH_2O (-621,60 mbar)	-250.00 inH_2O (-621,60 mbar)	-250.00 inH_2O (-621,60 mbar)
3	6.67 inH_2O (16,58 mbar)	1000.00 inH_2O (2,48 bar)	-1000.00 inH_2O (-2,48 bar)	0.50 psia (34,47 mbar)	-1000.00 inH_2O (-2,48 bar)	0.50 psia (34,47 mbar)
4	2.00 psi (137,89 mbar)	300.00 psi (20,68 bar)	-300.00 psi (-20,68 bar)	0.50 psia (34,47 mbar)	-300.00 psi (-20,68 bar)	0.50 psia (34,47 mbar)
5	13.33 psi (919,01 mbar)	2000.00 psi (137,89 bar)	- 2000.00 psi (-137,89 bar)	0.50 psia (34,47 mbar)	N/A	N/A

(1) Range 0 only available with 3051CD. Range 1 only available with 3051CD, 3051CG, or 3051CF. inH_2O referenced at 68 degrees Fahrenheit.

(2) For outputs options W and M, minimum span are: range 1 - 0.50 inH_2O (1,24 mbar), range 2 - 2.50 inH_2O (6,21 mbar), range 3 - 10.00 inH_2O (24,86 mbar), range 4 - 3.00 psi (0,21 bar), range 5 - 20.00 psi (1,38 bar).

(3) Assumes atmospheric pressure of 14.7 psig.

Table 8. 3051CA and 3051T Range and Sensor Limits

Range	3051CA			Range	3051T			
	Minimum span[1]	Range and sensor limits			Minimum span[1]	Range and sensor limits		Lower[2] (LRL) (gage)
		Upper (URL)	Lower (LRL)			Upper (URL)	Lower (LRL) (absolute)	
1	0.30 psi (20,68 mbar)	30 psia (2,06 bar)	0 psia (0 bar)	1	0.30 psi (20,68 mbar)	30.00 psi (2,06 bar)	0 psia (0 bar)	-14.70 psig (-1,01 bar)
2	1.00 psi (68,94 mbar)	150 psia (10,34 bar)	0 psia (0 bar)	2	1.00 psi (68,94 mbar)	150.00 psi (10,34 bar)	0 psia (0 bar)	-14.70 psig (-1,01 bar)
3	5.33 psi (367,49 mbar)	800 psia (55,15 bar)	0 psia (0 bar)	3	5.33 psi (367,49 mbar)	800.00 psi (55,15 bar)	0 psia (0 bar)	-14.70 psig (-1,01 bar)
4	26.67 psi (1,83 bar)	4000 psia (275,79 bar)	0 psia (0 bar)	4	26.67 psi (1,83 bar)	4000.00 psi (275,79 bar)	0 psia (0 bar)	-14.70 psig (-1,01 bar)
5	N/A	N/A	N/A	5	2000.00 psi (137,89 bar)	10000.00 psi (689,47 bar)	0 psia (0 bar)	-14.70 psig (-1,01 bar)

(1) For output options W and M, minimum span are: range 2 - 1.50 psi(0,10 bar), range 3 - 8.00 psi (0,55 bar), range 4 - 40.00 psi (2,75 bar), range 5 for 3051T - 2000.00 psi (137,89 bar)

(2) Assumes atmospheric pressure of 14.7 psig.

Service

Liquid, gas, and vapor applications

4-20 mA HART (output code A)

Power supply

External power supply required. Standard transmitter (4-20mA) operates on 10.5-42.4 Vdc with no load

Load limitations

Maximum loop resistance is determined by the voltage level of the external power supply described by:

Max. Loop Resistance = 43.5 (Power Supply Voltage – 10.5)

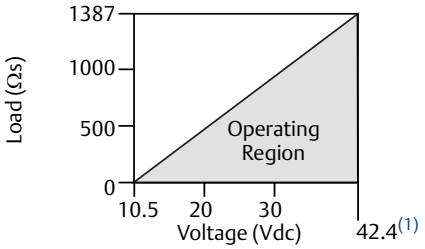

Communication requires a minimum loop resistance of 250 ohms.

(1) For CSA approval, power supply must not exceed 42.4 V.

Indication

Optional two line LCD/LOI Display

Optional configuration buttons

Configuration buttons need to be specified:
Digital Zero trim (option code DZ) changes digital value of the transmitter and is used for performing a sensor zero trim.
Analog Zero Span (option code D4) changes analog value and can be used to rerange the transmitter with an applied pressure.

Output

Two-wire 4-20mA, user selectable for linear or square root output. Digital process variable superimposed on 4-20 mA signal, available to any host that conforms to HART protocol. The 3051 comes with Selectable HART Revisions. Digital communications based on HART Revision 5 (default) or Revision 7 (option code HR7) protocol can be selected. The HART revision can be switched in the field using any HART based configuration tool or the optional local operator interface (M4).

Power advisory diagnostics

Power Advisory Diagnostics pro-actively detect and notify you of degraded electrical loop integrity before it can affect your process operation. Example loop problems that can be detected include water in the terminal compartment, corrosion of terminals, improper grounding, and unstable power supplies.
The Device Dashboard presents the diagnostics in a graphical, task-based interface that provides single-click access to critical process/device information and descriptive graphical troubleshooting.

Local operator interface

The LOI utilizes a 2 button menu with internal and external configuration buttons. Internal buttons are always configured for Local Operator Interface. External Buttons can be configured for either LOI (option code M4), Analog Zero and Span (option code D4) or Digital Zero Trim (option code DZ). See Rosemount 3051 product manual (00809-0100-4007) for LOI configuration menu.

FOUNDATION fieldbus (output code F)

Power supply

External power supply required; transmitters operate on 9.0 to 32.0 V dc transmitter terminal voltage. FISCO transmitters operate on 9.0 to 17.5 V dc.

Current draw

17.5 mA for all configurations (including LCD display option)

Indication

Optional two line LCD display

FOUNDATION fieldbus block execution times

Block	Execution time
Resource	N/A
Sensor and SPM Transducer	N/A
LCD Display	N/A
Analog Input 1, 2	20 milliseconds
PID	25 milliseconds
Input Selector	20 milliseconds
Arithmetic	20 milliseconds
Signal Characterizer	20 milliseconds
Integrator	20 milliseconds
Output Splitter	20 milliseconds
Control Selector	20 milliseconds

FOUNDATION fieldbus parameters

Links	25 (max.)
Virtual Communications Relationships (VCR)	20 (max.)

FOUNDATION fieldbus function blocks (option A01)

Resource block
The resource block contains diagnostic, hardware, and electronics information. There are no linkable inputs or outputs to the Resource Block.

Sensor transducer block
The sensor transducer block contains sensor information and the ability to calibrate the pressure sensor or recall factory calibration.

LCD transducer block
The LCD transducer block is used to configure the LCD display meter.

Analog input block
The analog input (AI) function block processes the measurements from the sensor and makes them available to other function blocks. The output value from the AI block is in engineering units and contains a status indicating the quality of the measurement. The AI Block is widely used for scaling functionality.

Input selector block
The input selector (ISEL) function block can be used to select the first good, hot backup, maximum, minimum, or average of as many as eight input values and place it at the output. The block supports signal status propagation.

Integrator block
The integrator (INT) function block integrates one or two variables over time. The block compares the integrated or accumulated value to pre-trip and trip limits and generates discrete output signals when the limits are reached.
The Integrator Block is used as a totalizer. This block will accept up to two inputs, has six options how to totalize the inputs, and two trip outputs.

Arithmetic block
The arithmetic (ARTH) function block provides the ability to configure a range extension function for a primary input. It can also be used to compute nine different arithmetic functions including flow with partial density compensation, electronic remote seals, hydrostatic tank gaging, ratio control, and others.

Signal characterizer block
The signal characterizer (SGCR) function block characterizes or approximates any function that defines an input/output relationship. The function is defined by configuring as many as twenty X,Y coordinates. The block interpolates an output value for a given input value using the curve defined by the configured coordinates. Two separate analog input signals can be processed simultaneously to give two corresponding separate output values using the same defined curve.

PID block
The PID function block combines all of the necessary logic to perform proportional/integral/derivative (PID) control. The block supports mode control, signal scaling and limiting, feed forward control, override tracking, alarm limit detection, and signal status propagation.

Control selector block
The control selector function block selects one of two or three inputs to be the output. The inputs are normally connected to the outputs of PID or other function blocks. One of the inputs would be considered normal and the other two overrides.

Output splitter block
The output splitter function block provides the capability to drive two control outputs from a single input. It takes the output of one PID or other control block to control two valves or other actuators.

Backup Link Active Scheduler (LAS)

The transmitter can function as a Link Active Scheduler if the current link master device fails or is removed from the segment.

FOUNDATION fieldbus Diagnostics Suite (option code D01)

The 3051C FOUNDATION fieldbus Diagnostics Suite features SPM technology to detect changes in the process, process equipment, or installation conditions (such as plugged impulse lines) of the transmitter. This is done by modeling the process noise signature (using the statistical values of mean and standard deviation) under normal conditions and then comparing the baseline values to current values over time. If a significant change in the current values is detected, the transmitter can generate an alert.

PROFIBUS PA (output code W)

Profile version

3.02

Power supply

External power supply required; transmitters operate on 9.0 to 32.0 V dc transmitter terminal voltage. FISCO transmitters operate on 9.0 to 17.5 V dc.

Current draw

17.5 mA for all configurations (including LCD display option)

Output update rate

Four times per second

Standard function blocks

Analog input (AI block)
The AI function block processes the measurements and makes them available to the host device. The output value from the AI block is in engineering units and contains a status indicating the quality of the measurement.

Physical block
The physical block defines the physical resources of the device including type of memory, hardware, electronics and diagnostic information.

Transducer block
Contains actual sensor measurement data including the sensor diagnostics and the ability to trim the pressure sensor or recall factory defaults.

Indication

Optional 2-line LCD display

Local operator interface

The LOI utilizes a 2 button menu with external configuration buttons.

Wireless (output code X)

Output

IEC 62591 (*Wireless*HART), 2.4 GHz DSSS

Wireless radio (internal antenna, WP5 option)

- Frequency: 2.400 - 2.485 GHz
- Channels: 15
- Modulation: IEEE 802.15.4 compliant DSSS
- Transmission: Maximum of 10 dBm EIRP

Local display

The optional 3-line, 7-digit LCD display can display user-selectable information such as primary variable in engineering units, scaled variable, percent of range, sensor module temperature, and electronics temperature. The display updates based on the wireless update rate.

Digital zero trim

Digital Zero trim (option DZ) is an offset adjustment to compensate for mounting position effects, up to 5% of URL.

Update rate

User selectable 1 sec. to 60 min.

Wireless sensor module for in-line transmitters

The 3051 Wireless transmitter requires the engineered polymer housing to be selected. The standard sensor module will come with aluminum material. If stainless steel is required, the option WSM must be selected.

Power module

Field replaceable, keyed connection eliminates the risk of incorrect installation, Intrinsically Safe Lithium-thionyl chloride Power Module with PBT/PC enclosure. Ten-year life at one minute update rate.(1)

(1) Reference conditions are 70 °F (21 °C), and routing data for three additional network devices.

Note: Continuous exposure to ambient temperature limits of -40 °F or 185 °F (-40 °C or 85 °C) may reduce specified life by less than 20 percent.

Low power output

1-5 Vdc HART Low Power (output code M)

Output

Three-wire 1-5 Vdc (option code C2) user-selectable output. Also user selectable for linear or square root output configuration. Digital process variable superimposed on voltage signal, available to any host conforming to the HART protocol. Low-power transmitter operates on 6-12 Vdc with no load.

Power consumption

3.0 mA, 18-36 mW

Minimum load impedance

100 kΩ (V_{out} wiring)

Indication

Optional 5-digit LCD display

Overpressure limits

Rosemount 3051CD/CG/CF

- Range 0: 750 psi (51,71 bar)
- Range 1: 2000 psig (137,90 bar)
- Ranges 2-5: 3626 psig (250,00 bar)
  4500 psig (310,26 bar) for option code P9

Rosemount 3051CA

- Range 1: 750 psia (51,71 bar)
- Range 2: 1500 psia (103,42 bar)
- Range 3: 1600 psia (110,32 bar)
- Range 4: 6000 psia (413,69 bar)

Rosemount 3051TG/TA

- Range 1: 750 psi (51,71 bar)
- Range 2: 1500 psi (103,42 bar)
- Range 3: 1600 psi (110,32 bar)
- Range 4: 6000 psi (413,69 bar)
- Range 5: 15000 psi (1034,21 bar)

For 3051L or Level Flange Option Codes FA, FB, FC, FD, FP, and FQ, limit is 0 psia to the flange rating or sensor rating, whichever is lower.

Table 9. 3051L and Level Flange Rating Limits

Standard	Type	CS rating	SST rating
ANSI/ASME	Class 150	285 psig	275 psig
ANSI/ASME	Class 300	740 psig	720 psig
ANSI/ASME	Class 600	1480 psig	1440 psig
At 100 °F (38 °C), the rating decreases with increasing temperature, per ANSI/ASME B16.5.			
DIN	PN 10-40	40 bar	40 bar
DIN	PN 10/16	16 bar	16 bar
DIN	PN 25/40	40 bar	40 bar
At 248 °F (120 °C), the rating decreases with increasing temperature, per DIN 2401.			

Static pressure limit

Rosemount 3051CD only

Operates within specifications between static line pressures of 0.5 psia and 3626 psig (4500 psig (310, 26 bar) for Option Code P9).

Range 0: 0.5 psia and 750 psig (0,03 bar and 51,71 bar)

Range 1: 0.5 psia and 2000 psig (0,03 bar and 137, 90 bar)

Burst pressure limits

3051C, 3051CF Coplanar or traditional process flange

10081 psig (695,06 bar)

3051T In-Line

Ranges 1-4: 11016 psi (759,53 bar)
Range 5: 26016 psig (1793,74 bar)

Failure mode alarm

HART 4-20 mA (output option code A)

If self-diagnostics detect a sensor or microprocessor failure, the analog signal is driven either high or low to alert the user. High or low failure mode is user-selectable with a jumper/switch on the transmitter. The values to which the transmitter drives its output in failure mode depend on whether it is configured to *standard, NAMUR-compliant,* or custom levels (see Alarm Configuration below). The values for each are as follows:

	High alarm	Low alarm
Default	≥ 21.75 mA	≤ 3.75 mA
NAMUR compliant[1]	≥ 22.5 mA	≤ 3.6 mA
Custom levels[2]	20.2 - 23.0 mA	3.4 - 3.8 mA

(1) Analog output levels are compliant with NAMUR recommendation NE 43, see option codes C4 or C5.

(2) Low alarm must be 0.1 mA less than low saturation and high alarm must be 0.1 mA greater than high saturation.

Output code M

If self-diagnostics detect a gross transmitter failure, the analog signal will be driven either below 0.94 V or above 5.4 V to alert the user (below 0.75 V or above 4.4 V for Option C2). High or low alarm signal is user-selectable by internal jumper.

Output code F, W, and X

If self-diagnostics detect a gross transmitter failure, that information gets passed as an alert and a status along with the process variable.

Temperature limits

Ambient

-40 to 185 °F (-40 to 85 °C)
With LCD display[1][2]: -40 to 176 °F (-40 to 80 °C)

(1) For the output code M and W, LCD display may not be readable and LCD display updates will be slower at temperatures below -22 °F (-30 °C).

(2) Wireless LCD display may not be readable and LCD display updates will be slower at temperature below -4 °F (-20 °C).

Storage[1]

-50 to 230 °F (-46 to 110 °C)
With LCD display: -40 to 185 °F (-40 to 85 °C)
With Wireless Output: -40 °F to 185 °F (-40 °C to 85 °C)

(1) If storage temperature is above 85°C, perform a sensor trim prior to installation.

Process

At atmospheric pressures and above. See Table 10.

Table 10. 3051 Process Temperature Limits

3051CD, 3051CG, 3051CF, 3051CA	
Silicone Fill Sensor[1]	
with Coplanar Flange	–40 to 250 °F (–40 to 121 °C)[2]
with Traditional Flange	–40 to 300 °F (–40 to 149 °C)[2][3]
with Level Flange	–40 to 300 °F (–40 to 149 °C)[2]
with 305 Integral Manifold	–40 to 300 °F (–40 to 149 °C)[2]
Inert Fill Sensor[1][4]	–40 to 185 °F (–40 to 85 °C)[5][6]
3051T (process fill fluid)	
Silicone Fill Sensor[1]	–40 to 250 °F (–40 to 121 °C)[2]
Inert Fill Sensor[1]	–22 to 250 °F (–30 to 121 °C)[2]
3051L low-side temperature limits	
Silicone Fill Sensor[1]	–40 to 250 °F (–40 to 121 °C)[2]
Inert Fill Sensor[1]	-40 to 185 °F (–40 to 85 °C)[5]
3051L high-side temperature limits (process fill fluid)	
SYLTHERM XLT	–102 to 293 °F (–75 to 145 °C)
D.C. Silicone 704®	32 to 401 °F (0 to 205 °C)
D.C. Silicone 200	–49 to 401 °F (–45 to 205 °C)
Inert	–49 to 320 °F (–45 to 160 °C)
Glycerin and Water	5 to 203 °F (–15 to 95 °C)
Neobee M-20	5 to 401 °F (–15 to 205 °C)
Propylene Glycol and Water	5 to 203 °F (–15 to 95 °C)

(1) Process temperatures above 185 °F (85 °C) require derating the ambient limits by a 1.5:1 ratio.

(2) 220 °F (104 °C) limit in vacuum service; 130 °F (54 °C) for pressures below 0.5 psia.

(3) 3051CD0 process temperature limits are –40 to 212 °F (–40 to 100 °C).

(4) Inert fill with traditional flange on Range 0: limits are 32 to 185°F (0 to 85°C).

(5) 160 °F (71 °C) limit in vacuum service.

(6) Not available for 3051CA.

Humidity limits

0–100% relative humidity

Turn-on time

Performance within specifications less than 2.0 seconds (20.0 seconds for PROFIBUS PA and FOUNDATION fieldbus protocols) after power is applied to the transmitter.[1]

(1) Does not apply to wireless option code X.

Volumetric displacement

Less than 0.005 in^3 (0,08 cm^3)

Damping

4-20 mA HART

Analog output response to a step input change is user-enterable from 0.0 to 60 seconds for one time constant. This software damping is in addition to sensor module response time.

FOUNDATION fieldbus

Transducer block: User configurable
AI Block: User configurable

PROFIBUS PA

AI Block only: User configurable

Physical specifications

Material selection

Emerson provides a variety of Rosemount products with various product options and configurations including materials of construction that can be expected to perform well in a wide range of applications. The Rosemount product information presented is intended as a guide for the purchaser to make an appropriate selection for the application. It is the purchaser's sole responsibility to make a careful analysis of all process parameters (such as all chemical components, temperature, pressure, flow rate, abrasives, contaminants, etc.), when specifying product materials, options, and components for the particular application. Emerson Process Management is not in a position to evaluate or guarantee the compatibility of the process fluid or other process parameters with the product options, configuration, or materials of construction selected.

Electrical connections

$^1/_2$–14 NPT, G$^1/_2$, and M20 × 1.5 conduit. The polymer housing (housing code P) has no conduit entries. HART interface connections fixed to terminal block for output code A and to 701P Power Module for Output Code X.

Process connections

Rosemount 3051C

$^1/_4$–18 NPT on 2$^1/_8$-in. centers
$^1/_2$–14 NPT on 2-, 2$^1/_8$-, or 2$^1/_4$-in. centers

Rosemount 3051L

High pressure side: 2-, 3-, or 4-in., ASME B 16.5 (ANSI) Class 150, 300 or 600 flange; 50, 80 or 100 mm, PN 40 or 10/16 flange
Low pressure side: $^1/_4$–18 NPT on flange $^1/_2$–14 NPT on adapter

Rosemount 3051T

$^1/_2$–14 NPT female.
G$^1/_2$A DIN 16288 Male (Range 1–4 only)
Autoclave type F-250-C (Pressure relieved $^9/_{16}$–18 gland thread; $^1/_4$ OD high pressure tube 60° cone; available in SST for Range 5 transmitters only).

Rosemount 3051CF

For 3051CFA, see 00813-0100-4485 Rosemount 485 Annubar
For 3051CFC, see 00813-0100-4485 Rosemount 405 Compact Orifice Plate
For 3051CFP, see 00813-0100-4485 Rosemount 1195 Integral Orifice

Process-wetted parts

Drain/vent valves

316 SST, Alloy C-276, or Alloy 400 material (Alloy 400 not available with 3051L)

Process flanges and adapters

Plated carbon steel
SST: CF-8M (Cast 316 SST) per ASTM A743
Cast C-276: CW-12MW per ASTM A494
Cast Alloy 400: M-30C per ASTM A494

Wetted O-rings

Glass-filled PTFE or Graphite-filled PTFE

Process isolating diaphragms

Isolating diaphragm material	3051CD 3051CG	3051T	3051CA
316L SST (UNS S31603)	•	•	•
Alloy C-276 (UNS N10276)	•	•	•
Alloy 400 (UNS N04400)	•		•
Tantalum (UNS R05440)	•		
Gold-plated Alloy 400	•		•
Gold-plated 316L SST	•		•

Rosemount 3051L process wetted parts

Flanged process connection (transmitter high side)

Process diaphragms, including process gasket surface
316L SST, Alloy C-276, or Tantalum

Extension
CF-3M (Cast version of 316L SST, material per ASTM-A743), or Alloy C-276. Fits schedule 40 and 80 pipe.

Mounting flange
Zinc-cobalt plated CS or SST

Reference process connection (transmitter low side)

Isolating diaphragms
316L SST or Alloy C-276

Reference flange and adapter
CF-8M (Cast version of 316 SST, material per ASTM-A743)

Non-wetted parts

Electronics housing

Low-copper aluminum or CF-8M (Cast version of 316 SST).
Enclosure Type 4X, IP 65, IP 66, IP 68
Housing Material Code P: PBT/PC with NEMA 4X and IP66/67/68

Coplanar sensor module housing

SST: CF-3M (Cast 316L SST)

Bolts

Plated carbon steel per ASTM A449, Type 1
Austenitic 316 SST per ASTM F593
ASTM A193, Grade B7M alloy steel
Alloy K-500

Sensor module fill fluid

Coplanar: silicone or Inert Halocarbon
In-line: silicone or Fluorinert™ FC-43

Process fill fluid (3051L only)

SYLTHERM XLT, D.C. Silicone 704, D.C. Silicone 200, inert, glycerin and water, Neobee M-20, or propylene glycol and water

Paint

Polyurethane

Cover O-rings

Buna-N
Silicone (for wireless option code X)

Power module

Field replaceable, keyed connection eliminates the risk of incorrect installation, Intrinsically Safe Lithium-thionyl chloride Power Module with PBT enclosure.

Shipping weights

Table 11. Transmitter Weights without Options(1)

Transmitter	Rosemount 3051 In lb. (kg)	Wireless In lb. (kg)
3051C	6.0 (2,7)	3.9 (1,8)
3051T	3.0 (1,4)	1.9 (0,86)
3051L	Table 12	Table 12

(1) Transmitter weights include the sensor module and housing only (aluminum for Rosemount 3051 and polymer for wireless).

Table 12. 3051L Weights without Options

Flange	Flush lb. (kg)	2-in. Ext. lb. (kg)	4-in. Ext. lb. (kg)	6-in. Ext. lb. (kg)
2-in., 150	12.5 (5,7)	N/A	N/A	N/A
3-in., 150	17.5 (7,9)	19.5 (8,8)	20.5 (9,3)	21.5 (9,7)
4-in., 150	23.5 (10,7)	26.5 (12,0)	28.5 (12,9)	30.5 (13,8)
2-in., 300	17.5 (7,9)	N/A	N/A	N/A
3-in., 300	22.5 (10,2)	24.5 (11,1)	25.5 (11,6)	26.5 (12,0)
4-in., 300	32.5 (14,7)	35.5 (16,1)	37.5 (17,0)	39.5 (17,9)
2-in., 600	15.3 (6,9)	N/A	N/A	N/A
3-in., 600	25.2 (11,4)	27.2 (12,3)	28.2 (12,8)	29.2 (13,2)
DN 50/PN 40	13.8 (6,2)	N/A	N/A	N/A
DN 80/PN 40	19.5 (8,8)	21.5 (9,7)	22.5 (10,2)	23.5 (10,6)
DN 100/ PN 10/16	17.8 (8,1)	19.8 (9,0)	20.8 (9,5)	21.8 (9,9)
DN 100/ PN 40	23.2 (10,5)	25.2 (11,5)	26.2 (11,9)	27.2 (12,3)

Table 12. 3051L Weights without Options

Flange	Flush lb. (kg)	2-in. Ext. lb. (kg)	4-in. Ext. lb. (kg)	6-in. Ext. lb. (kg)
DN 80/PN 40	19.5 (8,8)	21.5 (9,7)	22.5 (10,2)	23.5 (10,6)
DN 100/ PN 10/16	17.8 (8,1)	19.8 (9,0)	20.8 (9,5)	21.8 (9,9)
DN 100/ PN 40	23.2 (10,5)	25.2 (11,5)	26.2 (11,9)	27.2 (12,3)

Table 13. Transmitter Option Weights

Code	Option	Add lb. (kg)
J, K, L, M	Stainless Steel Housing (T)	3.9 (1,8)
J, K, L, M	Stainless Steel Housing (C, L, H, P)	3.1 (1,4)
M4/M5	LCD display for wired transmitter	0.5 (0,2)
M5	LCD Display for Wireless Output	0.1 (0,04)
B4	SST Mounting Bracket for Coplanar Flange	1.0 (0,5)
B1, B2, B3	Mounting Bracket for Traditional Flange	2.3 (1,0)
B7, B8, B9	Mounting Bracket for Traditional Flange	2.3 (1,0)
BA, BC	SST Bracket for Traditional Flange	2.3 (1,0)
H2	Traditional Flange	2.4 (1,1)
H3	Traditional Flange	2.7 (1,2)
H4	Traditional Flange	2.6 (1,2)
H7	Traditional Flange	2.5 (1,1)
FC	Level Flange—3 in., 150	10.8 (4,9)
FD	Level Flange—3 in., 300	14.3 (6,5)
FA	Level Flange—2 in., 150	10.7 (4,8)
FB	Level Flange—2 in., 300	14.0 (6,3)
FP	DIN Level Flange, SST, DN 50, PN 40	8.3 (3,8)
FQ	DIN Level Flange, SST, DN 80, PN 40	13.7 (6,2)
WSM	SST Sensor Module	1.0 (0,45)
	Power Module (701PGNKF)	0.4 (0,18)

3051 Product Certifications

European Directive Information

A copy of the EC Declaration of Conformity can be found at the end of the Quick Start Guide. The most recent revision of the EC Declaration of Conformity can be found at www.rosemount.com.

Ordinary Location Certification for FM Approvals

As standard, the transmitter has been examined and tested to determine that the design meets the basic electrical, mechanical, and fire protection requirements by FM Approvals, a nationally recognized test laboratory (NRTL) as accredited by the Federal Occupational Safety and Health Administration (OSHA).

North America

E5 FM Explosionproof (XP) and Dust-Ignitionproof (DIP)
Certificate: 0T2H0.AE

Standards: FM Class 3600 – 1998, FM Class 3615 – 2006, FM Class 3810 – 2005, ANSI/NEMA 250 – 2003

Markings: XP CL I, DIV 1, GP B, C, D; DIP CL II, DIV 1, GP E, F, G; CL III; T5(-50°C ≤ Ta ≤ +85°C); Factory Sealed; Type 4X

I5 FM Intrinsic Safety (IS) and Nonincendive (NI)
Certificate: 1Q4A4.AX

Standards: FM Class 3600 – 2011, FM Class 3610 – 2010, FM Class 3611 – 2004, FM Class 3810 – 2005

Markings: IS CL I, DIV 1, GP A, B, C, D; CL II, DIV 1, GP E, F, G; Class III; DIV 1 when connected per Rosemount drawing 03031-1019; NI CL 1, DIV 2, GP A, B, C, D; T4(-50°C ≤ Ta ≤ +70°C) [HART], T5(-50°C ≤ Ta ≤ +40°C) [HART]; T4(-50°C ≤ Ta ≤ +60°C) [Fieldbus/PROFIBUS]; Type 4x

Special Conditions for Safe Use (X):

1. The Model 3051 transmitter housing contains aluminum and is considered a potential risk of ignition by impact or friction. Care must be taken into account during installation and use to prevent impact and friction.
2. The Model 3051 transmitter with the transient terminal block (Option code T1) will not pass the 500Vrms dielectric strength test and this must be taken into account during installation.

IE FM FISCO
Certificate: 1Q4A4.AX

Standards: FM Class 3600 – 2011, FM Class 3610 – 2010, FM Class 3611 – 2004, FM Class 3810 – 2005

Markings: IS CL I, DIV 1, GP A, B, C, D when connected per Rosemount drawing 03031-1019 (-50°C ≤ Ta ≤ +60°C); Type 4x

Special Conditions for Safe Use (X):

1. The Model 3051 transmitter housing contains aluminum and is considered a potential risk of ignition by impact or friction. Care must be taken into account during installation and use to prevent impact and friction.
2. The Model 3051 transmitter with the transient terminal block (Option code T1) will not pass the 500Vrms dielectric strength test and this must be taken into account during installation.

C6 CSA Explosionproof, Dust-Ignitionproof, Intrinsic Safety and Nonincendive
Certificate: 1053834

Standards: ANSI/ISA 12.27.01-2003, CSA Std. C22.2 No. 30 -M1986, CSA Std. C22.2 No.142-M1987, CSA Std. C22.2. No.157-92, CSA Std. C22.2 No. 213 - M1987, CAN/CSA C22.2 No. 0-10, CSA Std C22.2 No. 25-1966, CAN/CSA-C22.2 No. 94-M91, CAN/CSA-E60079-0-07, CAN/CSA-E60079-1-07

Markings: Explosionproof for Class I, Division 1, Groups B, C and D; Suitable for Class I, Zone 1, Group IIB+H2, T5; Dust-Ignitionproof Class II, Division 1, Groups E, F, G; Class III Division 1; Intrinsically Safe Class I, Division 1 Groups A, B, C, D when connected in accordance with Rosemount drawing 03031-1024, Temperature Code T3C; Suitable for Class I, Zone 0; Class I Division 2 Groups A, B, C and D, T5; Suitable for Class I Zone 2, Group IIC; Type 4X; Factory Sealed; Single Seal (See drawing 03031-1053)

E6 CSA Explosionproof, Dust-Ignitionproof and Division 2
Certificate: 1053834

Standards: ANSI/ISA 12.27.01-2003, CSA Std. C22.2 No. 30 -M1986, CSA Std. C22.2 No.142-M1987, CSA Std. C22.2 No. 213 - M1987, CAN/CSA C22.2 No. 0-10, CSA Std C22.2 No. 25-1966, CAN/CSA-C22.2 No. 94-M91, CAN/CSA-C22.2 No. 157-92, CAN/CSA-E60079-0-07, CAN/CSA-E60079-1-07

Markings: Explosionproof Class I, Division 1, Groups B, C and D; Suitable for Class I, Zone 1, Group IIB+H2, T5; Dust-Ignitionproof for Class II and Class III, Division 1, Groups E, F and G; Class I, Division 2, Groups A, B, C and D; Suitable for Class I Zone 2, Group IIC; Type 4X; Factory Sealed; Single Seal (See drawing 03031-1053)

hazardous location. When used in combustible dust environment, cable entry in accordance with IP66 or higher level should be applied.

4. Obey the warning "Keep tight when the circuit is alive."
5. End users are not permitted to change any internal components.
6. During installation, use and maintenance of this product, observe the following standards:
   GB3836.13-1997 "Electrical apparatus for explosive gas atmospheres Part 13: Repair and overhaul for apparatus used in explosive gas atmospheres"
   GB3836.15-2000 "Electrical apparatus for explosive gas atmospheres Part 15: Electrical installations in hazardous area (other than mines)"
   GB3836.16-2006 "Electrical apparatus for explosive gas atmospheres Part 16: Inspection and maintenance of electrical installation (other than mines)"
   GB50257-1996 "Code for construction and acceptance of electric device for explosion atmospheres and fire hazard electrical equipment installation engineering".
   GB12476.2-2006 "Electrical apparatus for use in the presence of combustible dust Part 1-2: Electrical apparatus protected by enclosures and surface temperature limitation-Selection, installation and maintenance"
   GB15577-2007 "Safety regulations for dust explosion prevention and protection"

I3 China Intrinsic Safety

Certificate: GYJ13.1362X; GYJ101312X [Flowmeters]

Standards: GB3836.1-2010, GB3836.4-2010, GB3836.20-2010, GB12476.1-2000

Markings: Ex ia IIC Ga T4/T5

Special Conditions for Safe Use (X):

1. Symbol "X" is used to denote specific conditions of use:
   a. If the apparatus is fitted with an optional 90V transient suppressor, it is not capable of withstanding the 500V insulation test for 1 minute. This must be taken into account when installing the apparatus.
   b. The enclosure may be made of aluminum alloy and given a protective polyurethane paint finish; however, care should be taken to protect it from impact or abrasion if located in Zone 0.
2. The relation between T code and ambient temperature range is:

Model	T code	Temperature range
HART	T5	-60°C ≤ Ta ≤ +40°C
HART	T4	-60°C ≤ Ta ≤ +70°C
Fieldbus/PROFIBUS/FISCO	T4	-60°C ≤ Ta ≤ +60°C
Flowmeter with 644 Temp Housing	T4	-40°C ≤ Ta ≤ +60°C

3. Intrinsically Safe parameters:
   Input parameters

	HART	Fieldbus/PROFIBUS	FISCO
Voltage U_i	30 V	30 V	17.5 V
Current I_i	200 mA	300 mA	380 mA
Power P_i	0.9 W	1.3 W	5.32 W
Capacitance C_i	0.012 µF	0 µF	<5 nF
Inductance L_i	0 mH	0 mH	<10 µH

   Note 1: FISCO parameters apply to both Group IIC and IIB.
   Note 2: [For Flowmeters] When 644 Temperature Transmitter is used, it should be used with Ex-certified associated apparatus to establish explosion protection system that can be used in explosive gas atmospheres. Wiring and terminals should comply with the instruction manual of both 644 Temperature Transmitter and associated apparatus. The cables between 644 Temperatures Transmitter and associated apparatus should be shielded cables (the cables must have insulated shield). The shielded cable has to be grounded reliably in a non-hazardous area.
4. Transmitters comply with the requirements for FISCO field devices specified in IEC60079-27:2008. For the connection of an intrinsically safe circuit in accordance with FISCO Model, FISCO parameters are listed in the table above.
5. The product should be used with Ex-certified associated apparatus to establish explosion protection system that can be used in explosive gas atmospheres. Wiring and terminals should comply with the instruction manual of the product and associated apparatus.
6. The cables between this product and associated apparatus should be shielded cables (the cables must have insulated shield). The shielded cable has to be grounded reliably in a non-hazardous area.
7. End users are not permitted to change any intern components but to settle the problem in conjunction with the manufacturer to avoid damage to the product.
8. During installation, use and maintenance of this product, observe the following standards:
   GB3836.13-1997 "Electrical apparatus for explosive gas atmospheres Part 13: Repair and overhaul for apparatus used in explosive gas atmospheres"
   GB3836.15-2000 "Electrical apparatus for explosive gas atmospheres Part 15: Electrical installations in hazardous area (other than mines)"
   GB3836.16-2006 "Electrical apparatus for explosive gas atmospheres Part 16: Inspection and maintenance of electrical installation (other than mines)"
   GB50257-1996 "Code for construction and acceptance of electric device for explosion atmospheres and fire hazard electrical equipment installation engineering".
   GB12476.2-2006 "Electrical apparatus for use in the presence of combustible dust Part 1-2: Electrical apparatus protected by enclosures and surface temperature

Thread Adapter Thread Sizes

Male thread	Identification mark
M20 x 1.5 – 6H	M20
1/2 - 14 NPT	1/2 – 14 NPT
3/4 - 14 NPT	3/4 – 14 NPT
Female thread	**Identification mark**
M20 x 1.5 – 6H	M20
1/2 - 14 NPT	1/2 – 14 NPT
PG 13.5	PG 13.5

Special Conditions for Safe Use (X):

1. When the thread adapter or blanking plug is used with an enclosure in type of protection increased safety "e" the entry thread shall be suitably sealed in order to maintain the ingress protection rating (IP) of the enclosure.
2. The blanking plug shall not be used with an adapter.
3. Blanking Plug and Threaded Adapter shall be either NPT or Metric thread forms. G½ and PG 13.5 thread forms are only acceptable for existing (legacy) equipment installations.

Additional Certifications

SBS American Bureau of Shipping (ABS) Type Approval

Certificate: 09-HS446883A-PDA

Intended Use: Measure gauge or absolute pressure of liquid, gas or vapor applications on ABS classed vessels, marine, and offshore installations.

ABS Rules: 2014 Steel Vessels Rules 1-1-4/7.7, 4-8-3/13.1, 1-1-A3, 4-8-3/1.7, 4-8-3/1.11.1

SBV Bureau Veritas (BV) Type Approval

Certificate: 23155/A3 BV

Requirements: Bureau Veritas Rules for the Classification of Steel Ships

Application: Class notations: AUT-UMS, AUT-CCS, AUT-PORT and AUT-IMS; Pressure transmitter type 3051 cannot be installed on diesel engines

SDN Det Norske Veritas (DNV) Type Approval

Certificate: A-13245

Intended Use: Det Norske Veritas' Rules for Classification of Ships, High Speed & Light Craft and Det Norske Veritas' Offshore Standards

Application:

Location classes	
Type	3051
Temperature	D
Humidity	B
Vibration	A
EMC	B
Enclosure	D

SLL Lloyds Register (LR) Type Approval

Certificate: 11/60002

Application: Environmental categories ENV1, ENV2, ENV3 and ENV5

C5 Custody Transfer - Measurement Canada Accuracy Approval

Certificate: AG-0226; AG-0454; AG-0477

IEC 62591 (*Wireless*HART Protocol)

Approved Manufacturing Locations

Rosemount Inc. — Chanhassen, Minnesota USA
Fisher-Rosemount GmbH & Co. — Wessling, Germany
Emerson Process Management Asia Pacific Private Limited — Singapore
Beijing Rosemount Far East Instrument Co., LTD — Beijing, China

European Directive Information

The most recent revision of the EC declaration of conformity can be found at www.rosemount.com.

Telecommunication Compliance

All wireless devices require certification to ensure that they adhere to regulations regarding the use of the RF spectrum. Nearly every country requires this type of product certification. Emerson is working with governmental agencies around the world to supply fully compliant products and remove the risk of violating country directives or laws governing wireless device usage.

FCC and IC

This device complies with Part 15 of the FCC Rules. Operation is subject to the following conditions: This device may not cause harmful interference. This device must accept any interference received, including interference that may cause undesired operation. This device must be installed to ensure a minimum antenna separation distance of 20 cm from all persons.

Ordinary Location Certification for FM

As standard, the transmitter has been examined and tested to determine that the design meets basic electrical, mechanical, and fire protection requirements by FM, a nationally recognized testing laboratory (NRTL) as accredited by the Federal Occupational Safety and Health Administration (OSHA).

North American Certifications

Factory Mutual (FM) approvals

I5 FM Intrinsically Safe
Certificate No: 3046325
Applicable Standards: Class 3600:2011, Class 3610:2010, Class 3810: 2005, ANSI/ISA 60079-0 2009,ANSI/ISA 60079-11:2009
ANSI/NEMA 250:2003, ANSI/IEC 60529:2004
Markings: Intrinsically Safe for Class I, Division I, Groups A, B, C, D
Zone Marking: Class I Zone 0, AEx ia IIC
T4 (-40 °C to 70 °C)
Intrinsically Safe when installed according to Rosemount Drawing 03031-1062
Enclosure Type 4X/IP66/IP68/IP67

Special Conditions for Safe Use (X):

1. The inline pressure sensor may contain more than 10% aluminum and is considered a potential risk of ignition by impact or friction. Care must be taken into account during installation and use to prevent impact and friction.
2. The surface resistivity of the transmitter is greater than one gigaohm. To avoid electrostatic charge build-up, it must not be rubbed or cleaned with solvents or a dry cloth.
3. The Model 3051 Wireless Pressure Transmitter shall only be used with the 701PGNKF Rosemount SmartPower Battery Pack.

CSA - Canadian Standards Association

I6 CSA Intrinsically Safe
Certificate No: 2526009
Applicable Standards: CSA C22.2 No. 0-M91, CSA C22.2 No. 94-M91, CSA C22.2 No. 142-M1987, CSA C22.2 No. 157-92, CSA C22.2 No. 60529-05
Markings: Intrinsically Safe For Class I, Division I, Groups A, B, C, D
T4 (-40 °C to 70 °C)
Intrinsically safe when installed according to Rosemount drawing 03031-1063
Enclosure Type 4X/IP66/IP68

European Certifications

I1 ATEX Intrinsic Safety
Certificate No: Baseefa12ATEX0228X
Applicable Standards: EN60079-11:2012, EN60079-0:2012
Markings: Ex ia IIC T4 Ga (-40 °C ≤ Ta ≤ 70 °C)
 II 1G
IP66/68
CE 1180

Special Conditions for Safe Use (X):

1. The plastic enclosure may constitute a potential electrostatic ignition risk and must not be rubbed or cleaned with a dry cloth.

I7 IECEx Intrinsic Safety
Certificate No: IECEx BAS 12.0124X
Applicable Standards: IEC60079-11:2011, IEC60079-0:2011
Markings: Ex ia IIC T4 Ga (-40 °C ≤ Ta ≤ 70 °C)
IP66/68

Special Conditions for Safe Use (X):

1. The plastic enclosure may constitute a potential electrostatic ignition risk and must not be rubbed or cleaned with a dry cloth.
2. The Model 701PGNKF Power Module may be replaced in a hazardous area. The Power Module has a surface resistivity greater than 1GΩ and must be properly installed in the wireless device enclosure. Care must be taken during transportation to and from the point of installation to prevent electrostatic charge build-up.

Pipe I.D. Range Codes

For pipes with an Inner Diameter (I.D.) Range/Pipe Wall Thickness not found in this table or with a line size greater than 12-in. (300 mm), choose option code Z and specify the exact pipe dimensions (I.D. and Pipe Wall Thickness) on the Configuration Data Sheet (see document number 00806-0100-4010). The Emerson Process Management sizing program will determine this code, based on the application piping.

	Line size			I.D. range	Pipe wall thickness		I.D. range code
	Nominal	Max. O.D.	Option code		ANSI pipes	Non-ANSI pipes	
	2-in. (50 mm)	2.625-in. (66.68 mm)	020	1.784 to 1.841-in. (45.31 to 46.76 mm)	0.065 to 0.545-in. (1.7 to 13.8 mm)	0.065 to 0.488-in. (1.7 to 12.4 mm)	A
				1.842 to 1.938-in. (46.79 to 49.23 mm)		0.065 to 0.449-in. (1.7 to 11.4 mm)	B
				1.939 to 2.067-in. (49.25 to 52.50 mm)		0.065 to 0.417-in. (1.7 to 10.6 mm)	C
				2.068 to 2.206-in. (52.53 to 56.03 mm)		0.065 to 0.407-in. (1.7 to 10.3 mm)	D
	2 1/2-in. (63.5 mm)	3.188-in. (80.98 mm)	025	2.207 to 2.322-in. (56.06 to 58.98 mm)	0.083 to 0.563-in. (2.1 to 14.3 mm)	0.083 to 0.448-in. (2.1 to 11.4 mm)	B
				2.323 to 2.469-in. (59.00 to 62.71 mm)		0.083 to 0.417-in. (2.1 to 10.6 mm)	C
				2.470 to 2.598-in. (62.74 to 65.99 mm)		0.083 to 0.435-in. (2.1 to 11.0 mm)	D
				2.599 to 2.647-in. (66.01 to 67.23 mm)		0.083 to 0.515-in. (2.1 to 13.1 mm)	E
	3-in. (80 mm)	3.75-in. (95.25 mm)	030	2.648 to 2.751-in. (67.26 to 69.88 mm)	0.083 to 0.563-in. (2.1 to 14.3 mm)	0.083 to 0.460-in. (2.1 to 11.7 mm)	A
				2.752 to 2.899-in. (69.90 to 73.63 mm)		0.083 to 0.416-in. (2.1 to 10.6 mm)	B
				2.900 to 3.068-in. (73.66 to 77.93 mm)		0.083 to 0.395-in. (2.1 to 10.0 mm)	C
				3.069 to 3.228-in. (77.95 to 81.99 mm)		0.083 to 0.404-in (2.1 to 10.3 mm)	D
	3 1/2-in. (89 mm)	4.25-in. (107.95 mm)	035	3.229 to 3.333-in. (82.02 to 84.66 mm)	0.120 to 0.600-in. (3.0 to 15.2 mm)	0.120 to 0.496-in. (3.0 to 12.6 mm)	B
				3.334 to 3.548-in. (84.68 to 90.12 mm)		0.120 to 0.386-in. (3.0 to 9.8 mm)	C
				3.549 to 3.734-in. (90.14 to 94.84 mm)		0.120 to 0.415-in. (3.0 to 10.5 mm)	D
	4-in. (100 mm)	5.032-in. (127.81 mm)	040	3.735 to 3.825-in. (94.87 to 97.16 mm)	0.120 to 0.600-in. (3.0 to 15.2 mm)	0.120 to 0.510-in. (3.0 to 13.0 mm)	B
				3.826 to 4.026-in. (97.18 to 102.26 mm)		0.120 to 0.400-in. (3.0 to 10.2 mm)	C
				4.027 to 4.237-in. (102.29 to 107.62 mm)		0.120 to 0.390-in. (3.0 to 9.9 mm)	D
				4.238 to 4.437-in. (107.65 to 112.70 mm)		0.120 to 0.401-in. (3.0 to 10.2 mm)	E
	5-in. (125 mm)	6.094-in. (154.79 mm)	050	4.438 to 4.571-in. (112.73 to 116.10 mm)	0.134 to 0.614-in. (3.4 to 15.6 mm)	0.134 to 0.481-in. (3.4 to 12.2 mm)	A
				4.572 to 4.812-in. (116.13 to 122.22 mm)		0.134 to 0.374-in. (3.4 to 9.5 mm)	B
				4.813 to 5.047-in. (122.25 to 128.19 mm)		0.134 to 0.380-in. (3.4 to 9.7 mm)	C
				5.048 to 5.249-in. (128.22 to 133.32 mm)		0.134 to 0.413-in. (3.4 to 10.5 mm)	D

Sensor Size 1	6-in. (150 mm)	6.93-in. (176.02 mm)	060	5.250 to 5.472-in. (133.35 to 138.99 mm)	0.134 to 0.614-in. (3.4 to 15.6 mm)	0.134 to 0.3919-in. (3.4 to 9.9 mm)	A
				5.473 to 5.760-in. (139.01 to 146.30 mm)		0.134 to 0.327-in. (3.4 to 8.3 mm)	B
				5.761 to 6.065-in. (146.33 to 154.05 mm)		0.134 to 0.31-in. (3.4 to 7.9 mm)	C
				6.066 to 6.383-in. (154.08 to 162.13 mm)		0.134 to 0.297-in. (3.4 to 7.5 mm)	D
Sensor Size 2	6-in. (150 mm)	6.93-in. (176.02 mm)	060	5.250 to 5.472-in. (133.35 to 139.99 mm)	0.134 to 1.354-in. (3.4 to 34.4 mm)	0.134 to 1.132-in. (3.4 to 28.7 mm)	A
				5.473 to 5.760-in. (139.01 to 146.30 mm)		0.134 to 1.067-in. (3.4 to 27.1 mm)	B
				5.761 to 6.065-in. (146.33 to 154.05 mm)		0.134 to 1.05-in. (3.4 to 26.7 mm)	C
				6.066 to 6.383-in. (154.08 to 162.13 mm)		0.134 to 1.037-in. (3.4 to 26.3 mm)	D
Sensor Size 1	7-in. (180 mm)	7.93-in. (201.42 mm)	070	6.384 to 6.624-in. (162.15 to 168.25 mm)	0.134 to 0.614-in. (3.4 to 15.6 mm)	0.134 to 0.374-in. (3.4 to 9.5 mm)	B
				6.625 to 7.023-in. (168.28 to 178.38 mm)		0.134 to 0.216-in. (3.4 to 5.5 mm)	C
				7.024 to 7.392-in. (178.41 to 187.76 mm)		0.134 to 0.246-in. (3.4 to 6.2 mm)	D
Sensor Z2	7-in. (180 mm)	7.93-in. (201.42 mm)	070	6.384 to 6.624-in. (162.15 to 168.25 mm)	0.134 to 1.354-in. (3.4 to 34.4 mm)	0.134 to 1.114-in. (3.4 to 28.3 mm)	B
				6.625 to 7.023-in. (168.28 to 178.38 mm)		0.134 to 0.956-in. (3.4 to 24.3 mm)	C
				7.024 to 7.392-in. (178.41 to 187.76 mm)		0.134 to 0.986-in. (3.4 to 25.0 mm)	D
Sensor Size 1	8-in. (200 mm)	9.688-in. (246.08 mm)	080	7.393 to 7.624-in. (187.78 to 193.65 mm)	0.250 to 0.73-in. (6.4 to 18.5 mm)	0.250 to 0.499-in. (6.4 to 12.6 mm)	B
				7.625 to 7.981-in. (193.68 to 202.72 mm)		0.250 to 0.374-in. (6.4 to 9.5 mm)	C
				7.982 to 8.400-in. (202.74 to 213.36 mm)		0.250 to 0.312-in. (6.4 to 7.9 mm)	D
				8.401 to 8.766-in. (213.39 to 222.66 mm)		0.250 to 0.364-in. (6.4 to 9.2 mm)	E
Sensor Size 2	8-in. (200 mm)	9.688-in. (246.08 mm)	080	7.393 to 7.624-in. (187.78 to 193.65 mm)	0.250 to 1.47-in. (6.4 to 37.3 mm)	0.250 to 1.239-in. (6.4 to 31.4 mm)	B
				7.625 to 7.981-in. (193.68 to 202.72 mm)		0.250 to 1.114-in. (6.4 to 28.3 mm)	C
				7.982 to 8.400-in. (202.74 to 213.36 mm)		0.250 to 1.052-in. (6.4 to 26.7 mm)	D
				8.401 to 8.766-in. (213.39 to 222.66 mm)		0.250 to 1.104-in. (6.4 to 28.0 mm)	E
	10-in. (250 mm)	11.75-in. (298.45 mm)	100	8.767 to 9.172-in. (222.68 to 232.97 mm)	0.250 to 1.470-in. (6.4 to 37.3 mm)	0.250 to 1.065-in. (6.4 to 27.1 mm)	A
				9.173 to 9.561-in. (232.99 to 242.85 mm)		0.250 to 1.082-in. (6.4 to 27.5 mm)	B
				9.562 to 10.020-in. (242.87 to 254.51 mm)		0.250 to 1.012-in. (6.4 to 25.7 mm)	C
				10.021 to 10.546-in. (254.53 to 267.87 mm)		0.250 to 0.945-in. (6.4 to 24.0 mm)	D
				10.547 to 10.999-in. (267.89 to 279.37 mm)		0.250 to 1.018-in. (6.4 to 25.9 mm)	E
	12-in. (300 mm)	13.0375-in. (331.15 mm)	120	11.000 to 11.373-in. (279.40 to 288.87 mm)	0.250 to 1.470-in. (6.4 to 37.3 mm)	0.250 to 1.097-in. (6.4 to 27.9 mm)	B
				11.374 to 11.938-in. (288.90 to 303.23 mm)		0.250 to 0.906-in. (6.4 to 23.0 mm)	C
				11.939 to 12.250-in. (303.25 to 311.15 mm)		0.250 to 1.159-in. (6.4 to 29.4 mm)	D

Rosemount 3051 Dimensional Drawings(1)

Figure 1. Rosemount 3051C Exploded View

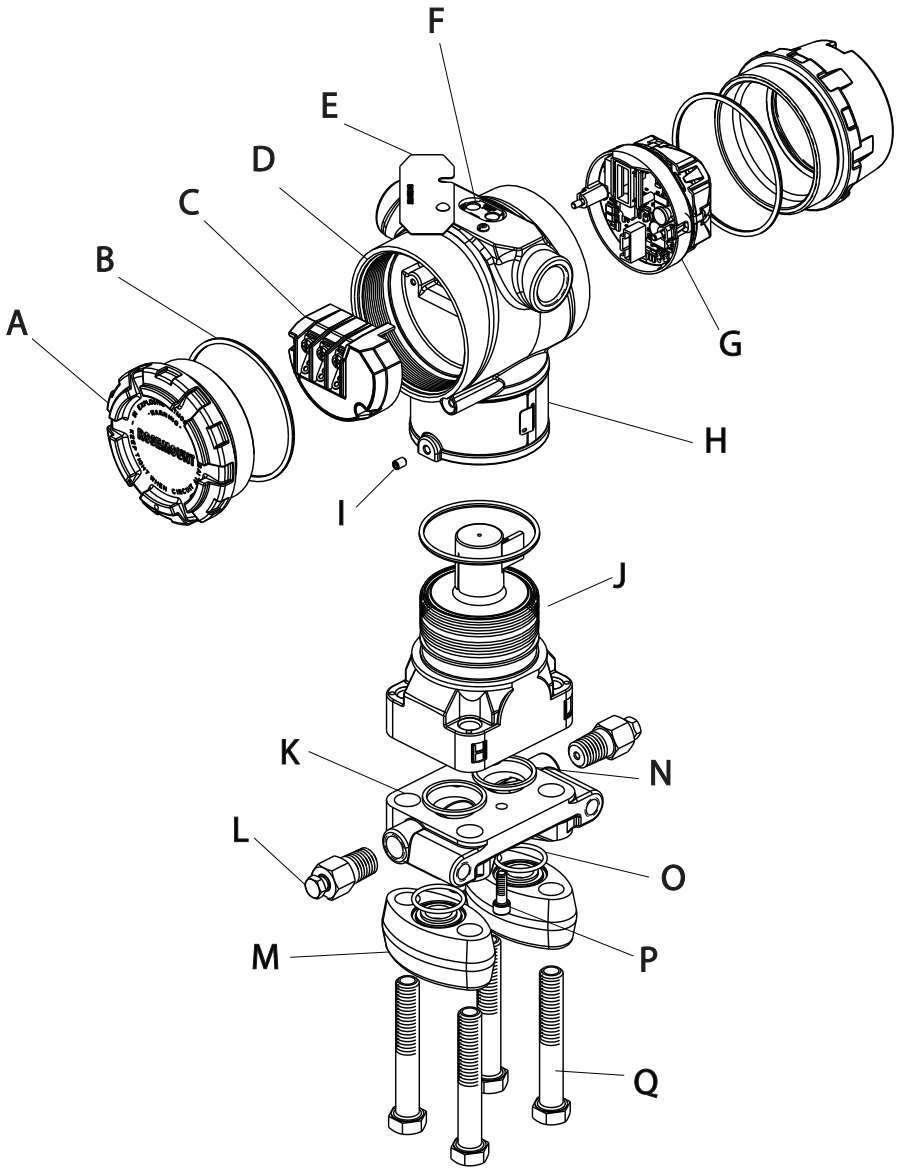

A. Cover
B. Cover O-ring
C. Terminal Block
D. Electronics Housing
E. Configuration Buttons Cover
F. Local Configuration Buttons
G. Electronics Board
H. Name Plate
I. Housing Rotation Set Screw (180 degree maximum rotation without further disassembly)
J. Sensor Module
K. Coplanar Flange
L. Drain/Vent Valve
M. Flange Adapters
N. Process O-Ring
O. Flange Adapter O-Ring
P. Flange Alignment Screw (not pressure retaining)
Q. Flange Bolts

(1) This section contains dimensional drawings for output codes A, F and X. For output codes W and M, visit http://www2.emersonprocess.com/en-US/brands/rosemount/Documentation-and-Drawings/Type-1-Drawings/Pages/index.aspx

Figure 16. Rosemount 3051L Dimensional Drawings

2-in. flange configuration (flush mount only)	3- and 4-in. flange configuration

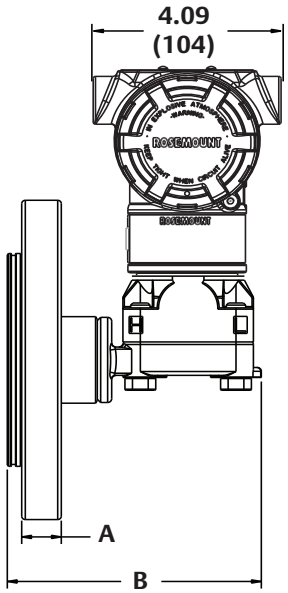

A. Flange Thickness
B. See Table 15.
C. Extension Diameter

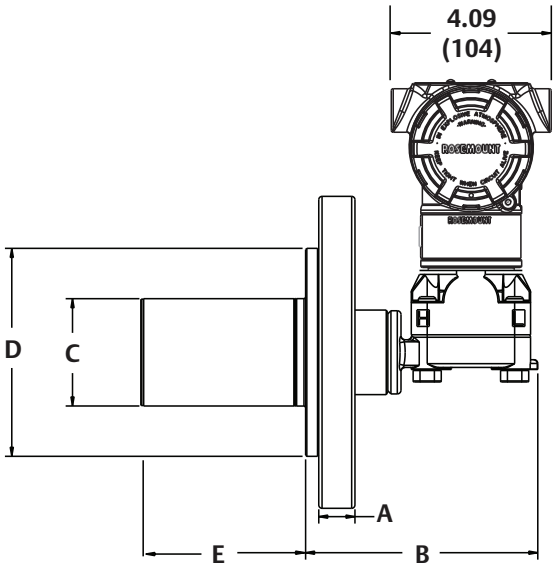

D. O.D. Gasket Surface
E. 2-in., 4-in., or 6-in. extension (only available with 3-in. and 4-in., DN80, and DN100 flange configurations)

Optional flushing connection ring (lower housing)	Diaphragm assembly and mounting flange

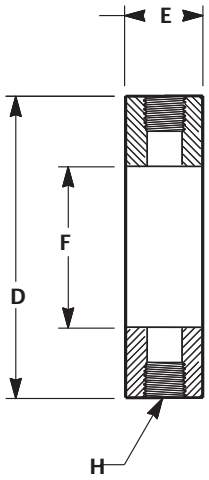

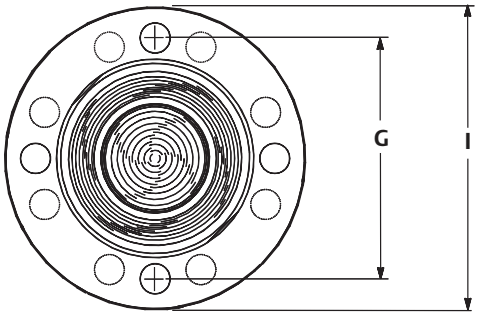

D. O.D. Gasket Surface
E. Lower Housing
F. Process Side
G. Bolt Circle Diameter
H. Flushing Connection
I. Outside Diameter

Diaphragm assembly and mounting flange

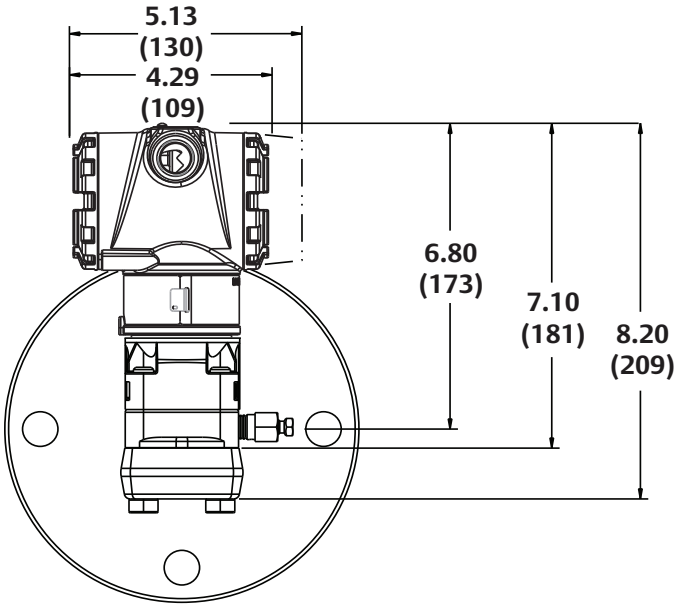

Dimensions are in inches (millimeters).

Table 15. 3051L Dimensional Specifications

Class[1]	Pipe size	Flange thickness A	Bolt circle diameter H	Outside diameter J	No. of bolts	Bolt hole diameter	Extension diameter[1] D	O.D. gasket surface E
ASME B16.5 (ANSI) 150	2 (51)	0.69 (18)	4.75 (121)	6.0 (152)	4	0.75 (19)	N/A	3.6 (92)
	3 (76)	0.88 (22)	6.0 (152)	7.5 (191)	4	0.75 (19)	2.58 (66)	5.0 (127)
	4 (102)	0.88 (22)	7.5 (191)	9.0 (229)	8	0.75 (19)	3.5 (89)	6.2 (158)
ASME B16.5 (ANSI) 300	2 (51)	0.82 (21)	5.0 (127)	6.5 (165)	8	0.75 (19)	N/A	3.6 (92)
	3 (76)	1.06 (27)	6.62 (168)	8.25 (210)	8	0.88 (22)	2.58 (66)	5.0 (127)
	4 (102)	1.19 (30)	7.88 (200)	10.0 (254)	8	0.88 (22)	3.5 (89)	6.2 (158)
ASME B16.5 (ANSI) 600	2 (51)	1.00 (25)	5.0 (127)	6.5 (165)	8	0.75 (19)	N/A	3.6 (92)
	3 (76)	1.25 (32)	6.62 (168)	8.25 (210)	8	0.88 (22)	2.58 (66)	5.0 (127)
DIN 2501 PN 10–40	DN 50	20 mm	125 mm	165 mm	4	18 mm	N/A	4.0 (102)
DIN 2501 PN 25/40	DN 80	24 mm	160 mm	200 mm	8	18 mm	66 mm	5.4 (138)
	DN 100	24 mm	190 mm	235 mm	8	22 mm	89 mm	6.2 (158)
DIN 2501 PN 10/16	DN 100	20 mm	180 mm	220 mm	8	18 mm	89 mm	6.2 (158)

Dimensions are in inches (millimeters).

(1) Tolerances are 0.040 (1.02), - 0.020 (0.51).

Class[1]	Pipe size	Process side G	Lower housing F		C
			1/4-in. NPT	1/2 -in. NPT	
ASME B16.5 (ANSI) 150	2 (51)	2.12 (54)	0.97 (25)	1.31 (33)	5.65 (143)
	3 (76)	3.60 (91)	0.97 (25)	1.31 (33)	5.65 (143)
	4 (102)	3.60 (91)	0.97 (25)	1.31 (33)	5.65 (143)
ASME B16.5 (ANSI) 300	2 (51)	2.12 (54)	0.97 (25)	1.31 (33)	5.65 (143)
	3 (76)	3.60 (91)	0.97 (25)	1.31 (33)	5.65 (143)
	4 (102)	3.60 (91)	0.97 (25)	1.31 (33)	5.65 (143)
ASME B16.5 (ANSI) 600	2 (51)	2.12 (54)	0.97 (25)	1.31 (33)	7.65 (194)
	3 (76)	3.60 (91)	0.97 (25)	1.31 (33)	7.65 (194)
DIN 2501 PN 10–40	DN 50	2.40 (61)	0.97 (25)	1.31 (33)	5.65 (143)
DIN 2501 PN 25/40	DN 80	3.60 (91)	0.97 (25)	1.31 (33)	5.65 (143)
	DN 100	3.60 (91)	0.97 (25)	1.31 (33)	5.65 (143)
DIN 2501 PN 10/16	DN 100	3.60 (91)	0.97 (25)	1.31 (33)	5.65 (143)

(1) Tolerances are 0.040 (1.02), - 0.020 (0.51).

Options

Standard configuration

Unless otherwise specified, transmitter is shipped as follows:

ENGINEERING UNITS Differential/Gage: Absolute/3051TA/3051TG:	inH_2O (Range 0, 1, 2, and 3) psi (Range 4 and 5) psi (all ranges)
4 mA[1]	0 (engineering units above)
20 mA[1]:	Upper range limit
Output:	Linear
External buttons:	None
Flange type:	Specified model code option
Flange material:	Specified model code option
O-ring material:	Specified model code option
Drain/vent:	Specified model code option
LCD Display:	None
Alarm[1]:	High
Software tag:	(Blank)
Damping:	0.4 seconds[2]

(1) Not applicable to FOUNDATION fieldbus, PROFIBUS PA, or wireless.

(2) For fieldbus protocols, default damping is 1 second.

Custom configuration[1]

If Option Code C1 is ordered, the customer may specify the following data in addition to the standard configuration parameters.

- Output Information
- Transmitter Information
- LCD Display Configuration
- Hardware Selectable Information
- Signal Selection
- Wireless Information
- Scaled Variable
- and more

Refer to the "Rosemount 3051 Configuration Data Sheet" document number 00806-0100-4007 for Rosemount 3051 HART protocol.

For Wireless refer to the "Rosemount 3051 Wireless Configuration Data Sheet" (document number 00806-0100-4100).[1]

Tagging (3 options available)

- Standard SST hardware tag is wired to the transmitter. Tag character height is 0.125 in. (3,18 mm), 56 characters maximum.
- Tag may be permanently stamped on transmitter nameplate upon request, 56 characters maximum.
- Tag may be stored in transmitter memory. Character limit is dependent on protocol.
  - HART Revision 5: 8 characters
  - HART Revision 7 and Wireless: 32 characters
  - FOUNDATION fieldbus: 32 characters
  - PROFIBUS PA: 32 characters

(1) Not applicable to FOUNDATION fieldbus or PROFIBUS PA protocols.

Commissioning tag[1]

A temporary commissioning tag is attached to all transmitters. The tag indicates the device ID and allows an area for writing the location.

Optional Rosemount 304, 305 or 306 Integral Manifolds

Factory assembled to 3051C and 3051T transmitters. Refer to the following Product Data Sheet (document number 00813-0100-4839 for Rosemount 304 and 00813-0100-4733 for Rosemount 305 and 306) for additional information.

Other seals

Refer to Product Data Sheet 00813-0100-4016 for additional information.

Output information

Output range points must be the same unit of measure. Available units of measure include:

Pressure			
atm	inH_2O@4 °C[2]	g/cm^2	psi
mbar	mmH_2O	kg/cm^2	torr
bar	mmHg	Pa	cmH_2O @4 °C[1][2]
inH_20	mmH_2O @4 °C[2]	kPa	mH_2O @4 °C[1][2]
inHg	ftH_20	MPa[2]	ftH_2O @60 °F[1][2]
hPa[1][2]	inH_2O@60 °F[2]	kg/m^2[1][2]	cmHg @0 °C[1][2]
mHg @0 °C[1][2]	psf[1][2]	ftH_2O @4 °C[1][2]	

(1) Field configurable only, not available for factory calibration or custom configuration (option code C1 “Software configuration”).

(2) Not available with Low Power (output option code M) or PROFIBUS PA (output option code W).

Display and interface options

M4 Digital Display with Local Operator Interface (LOI)

- Available for 4-20 mA HART and PROFIBUS PA

M5 Digital Display

- 2-Line, 5-Digit LCD display for low power output
- 2-Line, 8-Digit LCD display for 4-20 mA HART, FOUNDATION fieldbus and PROFIBUS PA
- 3-Line, 7-Digit LCD display for Wireless
- Direct reading of digital data for higher accuracy
- Displays user-defined flow, level, volume, or pressure units
- Displays diagnostic messages for local troubleshooting
- 90-degree rotation capability for easy viewing

Configuration buttons

Rosemount 3051 will ship with no buttons unless option D4 (Analog Zero and Span), DZ (Digital Zero), or M4 (LOI) for local configuration buttons are specified.

The Rosemount 3051 Wireless Transmitter is available with a Digital Zero button installed with or without the LCD display digital display.

Transient protection (option code T1)

Tested in accordance with IEEE C62.41.2-2002, Location Category B

6 kV crest (0.5 µs - 100 kHz)
3 kA crest (8 × 20 µs)
6 kV crest (1.2 × 50 µs)

Bolts for flanges and adapters

- Options permit bolts for flanges and adapters to be obtained in various materials
- Standard material is plated carbon steel per ASTM A449, Type 1

L4 Austenitic 316 Stainless Steel Bolts

L5 ASTM A 193, Grade B7M Bolts

L6 Alloy *K-500* Bolts

Conduit plug

DO 316 SST Conduit Plug
Single 316 SST conduit plug replaces carbon steel plug

Rosemount 3051C Coplanar Flange and 3051T Bracket Option

B4 Bracket for 2-in. Pipe or Panel Mounting

- For use with the standard coplanar flange configuration
- Bracket for mounting of transmitter on 2-in. pipe or panel
- Stainless steel construction with stainless steel bolts

(1) Only applicable to FOUNDATION fieldbus.

Rosemount 3051C Traditional Flange Bracket Options

B1 Bracket for 2-in. Pipe Mounting

- For use with the traditional flange option
- Bracket for mounting on 2-in. pipe
- Carbon steel construction with carbon steel bolts
- Coated with polyurethane paint

B2 Bracket for Panel Mounting

- For use with the traditional flange option
- Bracket for mounting transmitter on wall or panel
- Carbon steel construction with carbon steel bolts
- Coated with polyurethane paint

B3 Flat Bracket for 2-in. Pipe Mounting

- For use with the traditional flange option
- Bracket for vertical mounting of transmitter on 2-in. pipe
- Carbon steel construction with carbon steel bolts
- Coated with polyurethane paint

B7 B1 Bracket with SST Bolts

- Same bracket as the B1 option with Series 300 stainless steel bolts

B8 B2 Bracket with SST Bolts

- Same bracket as the B2 option with Series 300 stainless steel bolts

B9 B3 Bracket with SST Bolts

- Same bracket as the B3 option with Series 300 stainless steel bolts

BA Stainless Steel B1 Bracket with SST Bolts

- B1 bracket in stainless steel with Series 300 stainless steel bolts

BC Stainless Steel B3 Bracket with SST Bolts

- B3 bracket in stainless steel with Series 300 stainless steel bolts

Emerson Process Management
Rosemount Inc.
8200 Market Boulevard
Chanhassen, MN 55317 USA
T (U.S.) 1-800-999-9307
T (International) (952) 906-8888
F (952) 906 8889
www.rosemount.com

Emerson Process Management
Latin America
1300 Concord Terrace, Suite 400
Sunrise Florida 33323 USA
Tel + 1 954 846 5030
www.rosemount.com

Emerson Process Management Asia
Pacific Pte Ltd
1 Pandan Crescent
Singapore 128461
Tel +65 6777 8211
Fax +65 6777 0947
Service Support Hotline : +65 6770 8711
Email : Enquiries@AP.EmersonProcess.com
www.rosemount.com

Emerson Process Management
Blegistrasse 23
P.O. Box 1046
CH 6341 Baar
Switzerland
Tel +41 (0) 41 768 6111
Fax +41 (0) 41 768 6300
www.rosemount.com

Emerson FZE
P.O. Box 17033
Jebel Ali Free Zone
Dubai UAE
Tel +971 4 811 8100
Fax +971 4 886 5465
www.rosemount.com

Standard Terms and Conditions of Sale can be found at www.rosemount.com\terms_of_sale
The Emerson logo is a trade mark and service mark of Emerson Electric Co.
Tuned System, Coplanar, SmartPower, Annubar, Instrument Toolkit, Rosemount, and the Rosemount logotype are registered trademarks of Rosemount Inc.
PlantWeb is a registered trademark of one of the Emerson Process Management group of companies.
HART and *Wireless*HART are registered trademarks of the HART Communication Foundation.
FOUNDATION fieldbus is a trademark of the Fieldbus Foundation.
PROFIBUS is a registered trademark of PROFINET International (PI).
Fluorinert is a trademark of 3M.
Neobee is a registered trademark of Stepan Speciality Products, LLC.
SYLTHERM is a trademark of Dow Corning Corporation.
eurofast and minifast are registered trademarks of TURCK.
All other marks are the property of their respective owners.
© 2014 Rosemount Inc. All rights reserved.

ROSEMOUNT

EMERSON.
Process Management

Dwyer

FLOTECT® LIQUID LEVEL SWITCH

Easy In-wall or External Installation, Up to 2000 psig (138 bar)

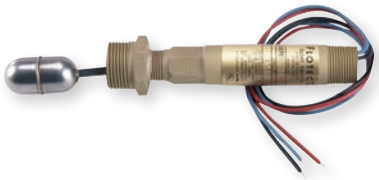

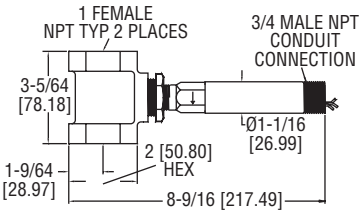

Model L6 with External Float Chamber

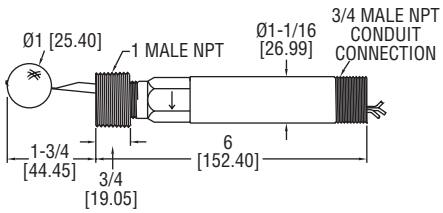

Model L6 with Spherical Float

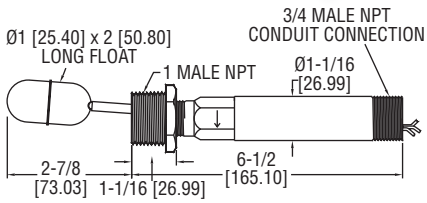

Model L6 with Cylindrical Float

Scan here to watch product video

The **SERIES L6** Flotect® Float Switches is a rugged and reliable float switch which operates automatically to indicate tank level. It is offered with a 303 SS or brass body with spherical or cylindrical float options.

FEATURES/BENEFITS

- Compact design is built for years of trouble-free service
- Simple and dependable operation with no mechanical linkage
- Float lever pivoted within the body moves when the process liquid displaces the float and magnet on the opposite end of the float lever controls a second magnet on the switch actuating lever located in the switch housing
- Leak proof lower body machined from bar stock
- Side wall or direct tee mounting options available to act as an external float chamber
- Weatherproof and explosion-proof body for demanding outdoor applications
- Electrical assembly can be easily replaced without removing the unit from the installation so that the process does not have to be shut down
- Sensitive to level changes of less than 1/2″ (12 mm)

APPLICATIONS

- Direct pump control for maintaining level
- Automatic tank dump operations
- Level control
- Valve control
- Level alarm in sumps, scrubber systems, hydro-pneumatic tanks, boilers, and water/wastewater treatment processes

OPTIONS

To order add suffix:	Description
-MV	Gold plated contacts for dry circuits (see electrical rating in specifications)
-MT	High temperature rated 400°F (204°C) (see electrical rating in specifications, no listings or approvals, only available on models with stainless steel floats)
-CSA	CSA and UL approved construction, includes weatherproof and explosion-proof junction box
-AT	ATEX compliant construction includes, weatherproof and explosion-proof, junction box
-IEC	IECEx certified construction
DPDT Contacts	

Note: To order, change seventh character in model number to “D”.
Example: L6EPB-B-D-3-O

Options Not Shown: 1-1/2″ and 2″ male NPT process connection, 2″ female NPT connection tee, and top mount.

SPECIFICATIONS

Service: Liquids compatible with wetted materials.
Wetted Materials: Float: Solid polypropylene or 304 SS; Lower Body: Brass or 303 SS; Magnet: Ceramic; External Float Chamber (Tee): Matches lower body choice of brass or 303 SS; Other: Lever Arm, Spring, Pin, etc.: 301 SS.
Temperature Limit: -4 to 220°F (-20 to 105°C) Standard, MT high temperature option 400°F (205°C)(MT not UL, CSA, ATEX, IECEx and KC). ATEX compliant AT, IECEx IEC and KC option ambient temperature -4 to 167°F (-20 to 75°C) process temperature: -4 to 220°F (-20 to 105°C).
Pressure Limits: See model chart.
Enclosure Rating: Weatherproof and Explosion-proof. Listed with UL and CSA for Class I, Groups A, B, C and D; Class II, Groups E, F, and G. (Group A on stainless steel body models only).
ATEX CE 0344 Ex II 2 G Ex d IIC T6 Gb Process Temp≤75°C.
EC-Type Certificate No.: KEMA 04ATEX2128.
ATEX Standards: EN 60079-0: 2009; EN60079-1: 2007.
IECEx Certified: For Ex d IIC T6 Gb Process Temp≤ 75°C.
IECEx Certificate of Conformity: IECEx DEK II.0039.
IECEx Standards: IEC 60079-00: 2007; IEC 60079-1: 2007.
Korean Certified (KC) for Ex d IIC T6 Gb Process Temp≤75°C.
KTL Certificate Number: 2012-2454-75.
Switch Type: SPDT snap switch standard, DPDT snap switch optional.
Electrical Rating: UL models: 5 A @ 125/250 VAC (V~). CSA, ATEX and IECEx models: 5 A @ 125/250 VAC (V~); 5 A res., 3 A ind. @ 30 VDC (V⎓). MV option: .1 A @ 125 VAC (V~). MT option: 5 A @125/250 VAC (V~). [MT option not UL, CSA, ATEX or IECEx].
Electrical Connections: UL models: 18 AWG, 18″ (460 mm) long. ATEX/CSA/IECEx models: terminal block.
Upper Body: Brass or 303 SS.
Conduit Connection: 3/4″ male NPT standard, 3/4″ female NPT on junction box models.
Process Connection: 1″ male NPT on models without external float chamber, 1″ female NPT on models with external float chamber.
Mounting Orientation: Horizontal with index arrow pointing down.
Specific Gravity: See chart.
Weight: Approximately 1 lb (.5 kg) without external float chamber, 1.75 lb (.8 kg) with external float chamber.
Agency Approvals: ATEX, CE, CSA, IECEx, KTL, UL.

MODEL CHART

Model	Body	Installation	Float Material	Max. Pressure psig (bar)	Min. S.G.
L6EPB-B-S-3-O	Brass	Side wall mounting	Polypropylene spherical	1000 (69)	0.9
L6EPB-B-S-3-A	Brass	Side wall mounting	304 SS cylindrical	200 (13.8)	0.5
L6EPB-B-S-3-C	Brass	Side wall mounting	304 SS spherical	350 (24.1)	0.7
L6EPB-B-S-3-B	Brass	Brass external float chamber (tee)	Polypropylene spherical	250 (17.2)	0.9
L6EPB-B-S-3-H	Brass	Brass external float chamber (tee)	304 SS spherical	250 (17.2)	0.7
L6EPS-S-S-3-O	303 SS	Side wall mounting	Polypropylene spherical	2000 (138)	0.9
L6EPS-S-S-3-A	303 SS	Side wall mounting	304 SS cylindrical	200 (13.8)	0.5
L6EPS-S-S-3-C	303 SS	Side wall mounting	304 SS spherical	350 (24.1)	0.7
L6EPS-S-S-3-S	303 SS	304 SS external float chamber (tee)	Polypropylene spherical	2000 (138)	0.9
L6EPS-S-S-3-L	303 SS	304 SS external float chamber (tee)	304 SS spherical	350 (24.1)	0.7

Model L6 FLOTECT® Float Switch

Specifications - Installation and Operating Instructions

Explosion-Proof; UL and CSA Listed -
Class I, Groups *A, B, C, & D
Class II, Groups E, F & G
Directive 94/9/EC (ATEX) Compliant for
II 2 G Ex d IIC T6 Gb Process Temp≤75°C
IECEx Compliant for Ex d IIC T6 Gb Process Temp≤75°C
*(Group A, stainless steel body only)

SPECIFICATIONS
Service: Liquids compatible with wetted materials.
Wetted Materials: Float: Solid polypropylene or 304 SS; Lower Body: Brass or 303 SS; Magnet: Ceramic; External Float Chamber (Tee): Matches lower body choice of brass or 303 SS; Other: Lever Arm, Spring, Pin, etc.: 301 SS.
Temperature Limit: -4 to 220°F (-20 to 105°C) Standard, MT high temperature option 400°F (205°C)(MT not UL, CSA, ATEX, IECEx and KC). ATEX compliant AT, IECEx IEC and KC option ambient temperature -4 to 167°F (-20 to 75°C) process temperature: -4 to 220°F (-20 to 105°C).
Pressure Limits: See next page.
Enclosure Rating: Weatherproof and Explosion-proof. Listed with UL and CSA for Class I, Groups A, B, C and D; Class II, Groups E, F, and G. (Group A on stainless steel body models only).
CE 0518 Ex II 2 G Ex d IIC T6 Gb Process Temp≤75°C.
EC-Type Certificate No.: KEMA 04ATEX2128.
ATEX Standards: EN 60079-0: 2009; EN60079-1: 2007.
IECEx Certified: For Ex d IIC T6 Gb Process Temp≤ 75°C.

IECEx Certificate of Conformity: IECEx DEK II.0039.
IECEx Standards: IEC 60079-00: 2007; IEC 60079-1: 2007.
Korean Certified (KC) for Ex d IIC T6 Gb Process Temp≤75°C.
KTL Certificate Number: 2012-2454-75.
Switch Type: SPDT snap switch standard, DPDT snap switch optional.
Electrical Rating: UL models: 5 A @ 125/250 VAC (V~). CSA, ATEX and IECEx models: 5 A @ 125/250 VAC (V~); 5A res., 3 A ind. @ 30 VDC (V⎓). MV option: 0.1 A @ 125 VAC (V~). MT option: 5 A @125/250 VAC (V~). [MT option not UL, CSA, ATEX or IECEx].
Electrical Connections: UL models: 18 AWG, 18″ (460 mm) long. ATEX/CSA/IECEx models: terminal block.
Upper Body: Brass or 303 SS.
Conduit Connection: 3/4″ male NPT standard, 3/4″ female NPT on junction box models.
Process Connection: 1″ male NPT on models without external float chamber, 1″ female NPT on models with external float chamber.
Mounting Orientation: Horizontal with index arrow pointing down.
Weight: Approximately 1 lb (.5 kg) without external float chamber, 1.75 lb (.8 kg) with external float chamber.
Specific Gravity: See next page.

Example	L6	EP	B	B	S	3	B	MT		L6EPB-B-S-3-B-MT level switch; brass upper housing, brass lower housing, brass tee with Polypropylene spherical float, SPDT snap switch, and high temperature option
Series	L6									Series L6 level switch
Construction		EP								Explosion proof and weatherproof
Upper Body Material			B S							Brass 303 Stainless Steel
Lower Body Material				B S						Brass 303 Stainless Steel
Circuit (Switch) Type					S D					SPDT DPDT
Line Size						3				1″ NPT
Tee and Float Options							0 A B C H L S			No Tee, Solid Polypropylene Spherical Float* No Tee, 304 SS Cylindrical Float Brass Tee, Solid Polypropylene Spherical Float* No Tee, 304 SS Spherical Float Brass Tee, 304 SS Spherical Float 303 SS Tee, 304 SS Spherical Float 303 SS Tee, Solid Polypropylene Spherical Float*
Switch Options								MV MT		Gold Contacts on snap switch for dry circuits (see specifications for ratings) High Temperature switch rated 400°F (205°C) (see specifications for ratings)*
Options									AT CSA IEC KC GL ID JCT JCTLH TBC TOP	ATEX approved construction (with JCT option standard) CSA approved construction (with JCT option standard)* IECEx approved construction (with JCT option standard) KC approved construction (with JCT option standard) Ground Lead* Customer Information on standard nameplate Weatherproof and explosion-proof junction box* Weatherproof and explosion-proof junction box, left side Terminal Block Connector* Top Mounted (No tee models only)*

* Options that do not have ATEX, IECEx or KC.

Attention: Units without the "AT" suffix are not Directive 94/9/EC (ATEX) compliant. These units are not intended for use in potentially hazardous atmospheres in the EU. These units may be CE marked for other Directives of the EU.

W.E. ANDERSON DIV., DWYER INSTRUMENTS, INC.
P.O. BOX 358 • MICHIGAN CITY, INDIANA 46360 U.S.A.
Phone: 219/879-8000
Fax: 219/872-9057
www.dwyer-inst.com
e-mail: info@dwyermail.com

MAXIMUM PRESSURE CHART

Model Number	Float	Pressure Rating psig (kg/cm²)
L6EPB-B-S-3-A	Cylindrical SS	200 (13.8)
L6EPB-B-S-3-B	Polypropylene	250 (17.2)
L6EPB-B-S-3-C	Round SS	350 (24.1)
L6EPB-B-S-3-H	Round SS	250 (17.2)
L6EPB-B-S-3-O	Polypropylene	1000 (69)
L6EPB-S-S-3-A	Cylindrical SS	200 (13.8)
L6EPB-S-S-3-C	Round SS	350 (24.1)
L6EPB-S-S-3-L	Round SS	350 (24.1)
L6EPB-S-S-3-O	Polypropylene	2000 (138)
L6EPB-S-S-3-S	Polypropylene	2000 (138)

INSTALLATION

Unpack switch and remove any packing material found inside lower housing or float chamber.

Switch must be installed with body in a horizontal plane and arrow on side pointing down.

If switch has an external float chamber (tee), connect it to vertical sections of 1″ NPT pipe installed outside vessel walls at appropriate levels. If unit has no external float chamber, it must be mounted in a 1″ NPT half coupling welded to the vessel wall. The coupling must extend through the wall.

Inspect and clean wetted parts at regular intervals.

ELECTRICAL CONNECTIONS

Connect wire leads in accordance with local electrical codes and switch action required. N.O. contacts will close and N.C. contacts will open when liquid level causes float to rise. They will return to “normal” condition on decreasing liquid level. Black = common, Blue = N.O. and Red = N.C.

For units supplied with both internal ground and external bonding terminals, the ground screw inside the housing must be used to ground the control. The external bonding screw is for supplementary bonding when allowed or required by local code. When external bonding conductor is required, conductor must be wrapped a minimum of 180° about the external bonding screw. See below. Some CSA listed models are furnished with a separate green ground wire. Such units must be equipped with a junction box, not supplied but available on special order.

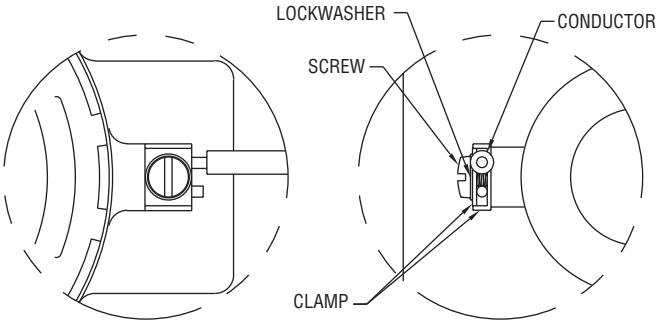

EC-Type Certificate IECEX and KC Installation Instructions:

Cable Connection

The cable entry device shall be certified in type of explosion protection flameproof enclosure “d”, suitable for conditions of use and correctly installed. For Ta ≥ 65°C cable and cable gland rated ≥ 90°C shall be used.

Conduit Connection

An Ex d certified sealing device such as a conduit seal with setting compound shall be provided immediately to the entrance of the valve housing. For Ta ≥ 65°C wiring and setting compound, in the conduit seal, rated ≥ 90°C shall be used.

WETTED MATERIALS CHART

Model	Brass	Bronze	Ceramic	Polypropylene	301SS	303SS	304SS
B-S-3-A	X		X		X		X
B-S-3-B	X	X	X	X	X		
B-S-3-C	X		X		X		X
B-S-3-H	X	X	X		X		
B-S-3-O	X		X	X	X		
S-S-3-A			X	X	X		X
S-S-3-C			X		X	X	X
S-S-3-L			X		X	X	X
S-S-3-O			X	X	X	X	
S-S-3-S			X	X	X	X	

Note: ATEX, IECEx and KC units only: The temperature class is determined by the maximum ambient and or process temperature. Units are intended to be used in ambient of -20°C≤ Tamb ≤75°C. Units may be used in process temperatures up to 105°C providing the enclosure and switch body temperatures do not exceed 75°C. The standard Temperature Class is T6 Process Temp ≤75°C.

Refer to Certificate No: IECEx DEK 11.0039 for conditions of safe use for IECEx compliant units.

All wiring, conduit and enclosures must meet applicable codes for hazardous areas. Conduits and enclosures must be properly sealed. For outdoor or other locations where temperatures vary widely, precautions should be taken to prevent condensation inside switch or enclosure. Electrical components must be kept dry at all times.

CAUTION: To prevent ignition of hazardous atmospheres, disconnect the device from the supply circuit before opening. Keep assembly tightly closed when in use.

MAINTENANCE

Inspect and clean wetted parts at regular intervals. The cover should be in place at all times to protect, the internal components from dirt, dust and weather and to maintain hazardous location ratings. Disconnect device from the supply circuit before opening to prevent ignition of hazardous atmosphere. Repairs to be conducted by Dwyer Instruments, Inc. Units in need of repair should be returned to the factory prepaid.

FLOTECT® MODEL L-6 FLOAT SWITCH — DIMENSION DRAWINGS

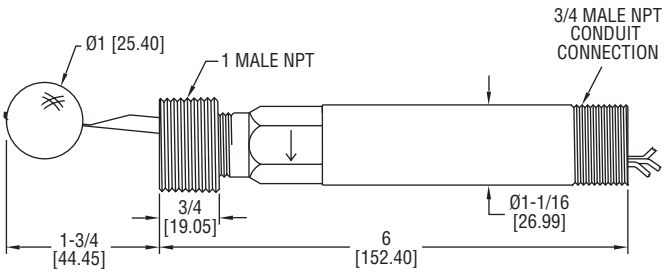

Polypropylene Float

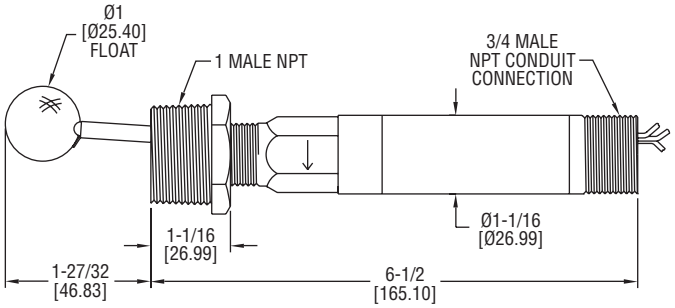

Round Stainless Steel Float

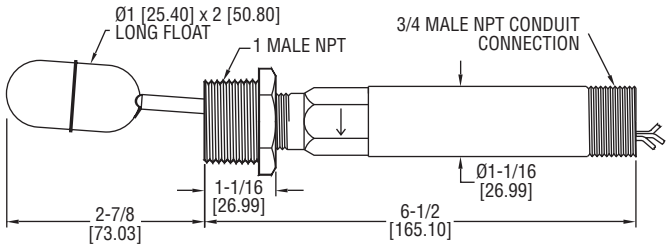

Cylindrical Stainless Steel Float

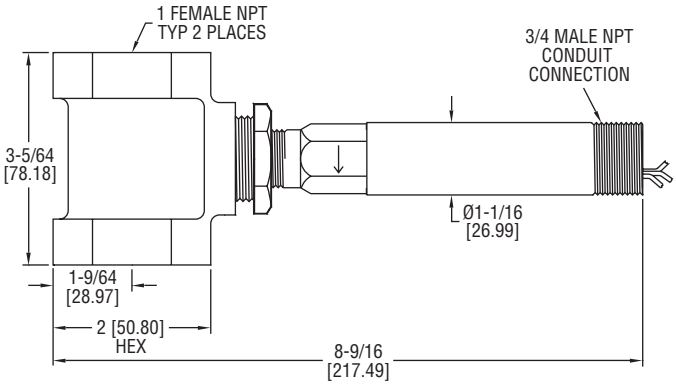

With External Chamber (Tee)

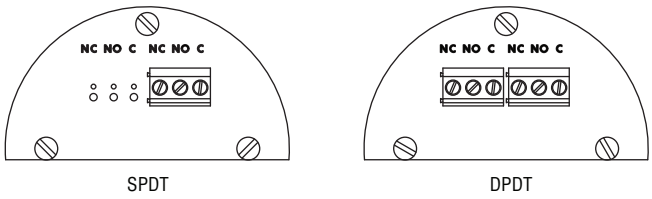

SPDT DPDT

Terminal Connections CSA, ATEX Enclosures

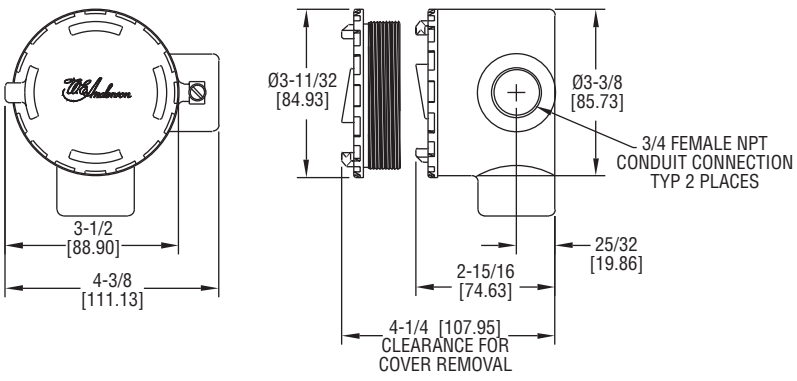

CSA, ATEX Conduit Enclosure

Limited Warranty: The Seller warrants all Dwyer instruments and equipment to be free from defects in workmanship or material under normal use and service for a period of one year from date of shipment. Liability under this warranty is limited to repair or replacement F.O.B. factory of any parts which prove to be defective within that time or repayment of the purchase price at the Seller's option provided the instruments have been returned, transportation prepaid, within one year from the date of purchase. All technical advice, recommendations and services are based on technical data and information which the Seller believes to be reliable and are intended for use by persons having skill and knowledge of the business, at their own discretion. In no case is Seller liable beyond replacement of equipment F.O.B. factory or the full purchase price. This warranty does not apply if the maximum ratings label is removed or if the instrument or equipment is abused, altered, used at ratings above the maximum specified, or otherwise misused in any way.

THIS EXPRESS LIMITED WARRANTY IS IN LIEU OF AND EXCLUDES ALL OTHER REPRESENTATIONS MADE BY ADVERTISEMENTS OR BY AGENTS AND ALL OTHER WARRANTIES, BOTH EXPRESS AND IMPLIED. THERE ARE NO IMPLIED WARRANTIES OF MERCHANTABILITY OR OF FITNESS FOR A PARTICULAR PURPOSE FOR GOODS COVERED HEREUNDER.

Buyers Remedies: THE BUYER'S EXCLUSIVE AND SOLE REMEDY ON ACCOUNT OF OR IN RESPECT TO THE FURNISHING OF NON-CONFORMING OR DEFECTIVE MATERIAL SHALL BE TO SECURE REPLACEMENT THEREOF AS AFORESAID. THE SELLER SHALL NOT IN ANY EVENT BE LIABLE FOR THE COST OF ANY LABOR EXPENDED ON ANY SUCH MATERIAL OR FORM ANY SPECIAL, DIRECT, INDIRECT OR CONSEQUENTIAL DAMAGES TO ANYONE BY REASON OF THE FACT THAT IT SHALL HAVE BEEN NON-CONFORMING OR DEFECTIVE.

©Copyright 2015 Dwyer Instruments, Inc.
Printed in U.S.A. 9/15

FR# 440726-00 Rev. 14

W.E. ANDERSON DIV., DWYER INSTRUMENTS, INC.
P.O. BOX 358 • MICHIGAN CITY, INDIANA 46360 U.S.A.

Phone: 219/879-8000
Fax: 219/872-9057

www.dwyer-inst.com
e-mail: info@dwyermail.com

Fliteway Technologies, Inc.

Instrumentation for Treated Water Storage Tank

2129 E. Birchwood Avenue, Cudahy, WI 53110

(414) 483-5600 (800) 236-3580 Fax: (414) 483-1957

See Instrumentation for Groundwater Treatment Feed Tank Section

Fliteway Technologies, Inc.

Feed Pump Skid

2129 East Birchwood Ave. Cudahy, WI 53110

(414) 483-5600 1-800-236-3580 FAX (414) 483-1957

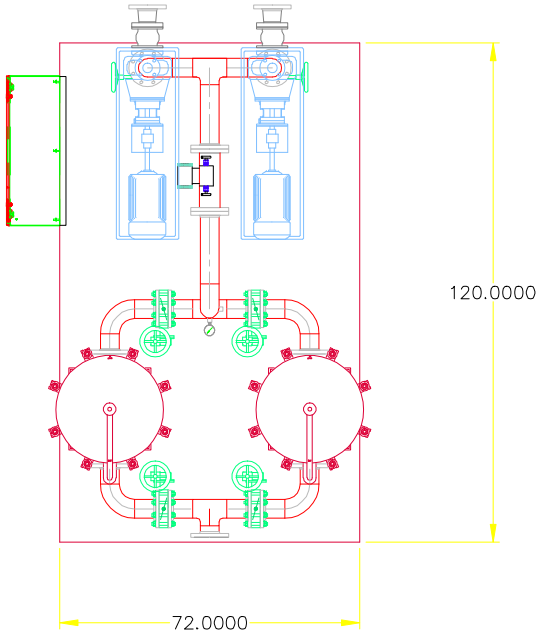

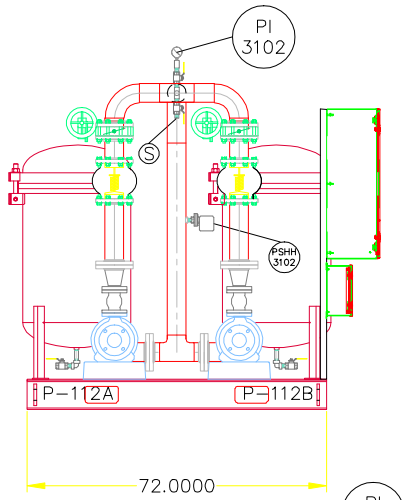

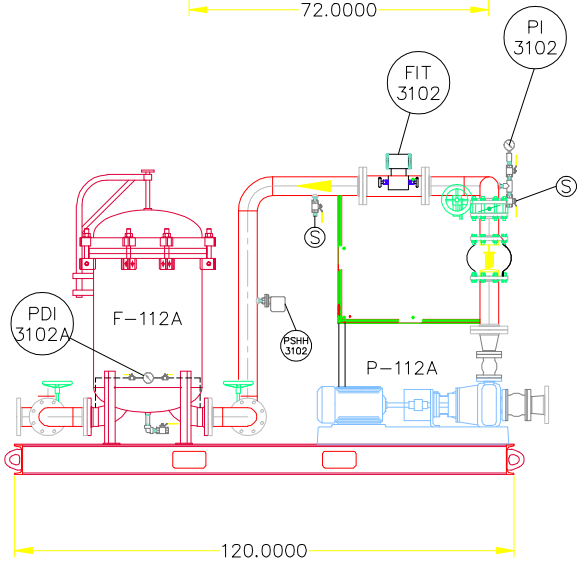

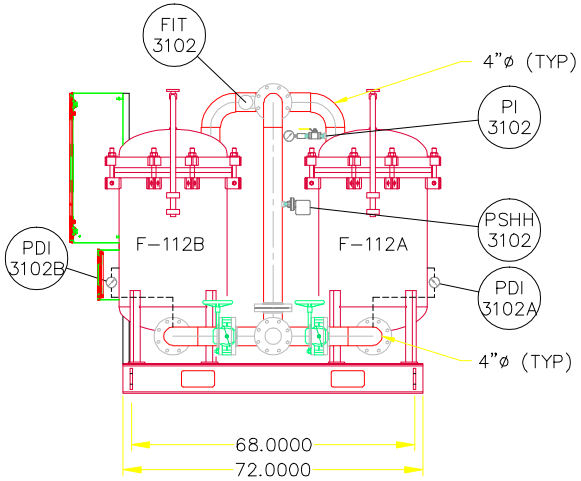

THIS DRAWING IS THE PROPERTY OF
Fliteway Technologies, Inc
2129 EAST BIRCHWOOD AVE
CUDAHY WI, 53110
414.483.5600 414.483.1957
AND IS NOT TO BE REPRODUCED
WITHOUT WRITTEN PERMISSION

6'X10' FEED PUMP SKID

TECHSAS INC.
KIRTLAND AFB

12/16/15	SIZE	FSCM NO.	DWG NO. Q14617
	SCALE NONE		SHEET 1 OF 1

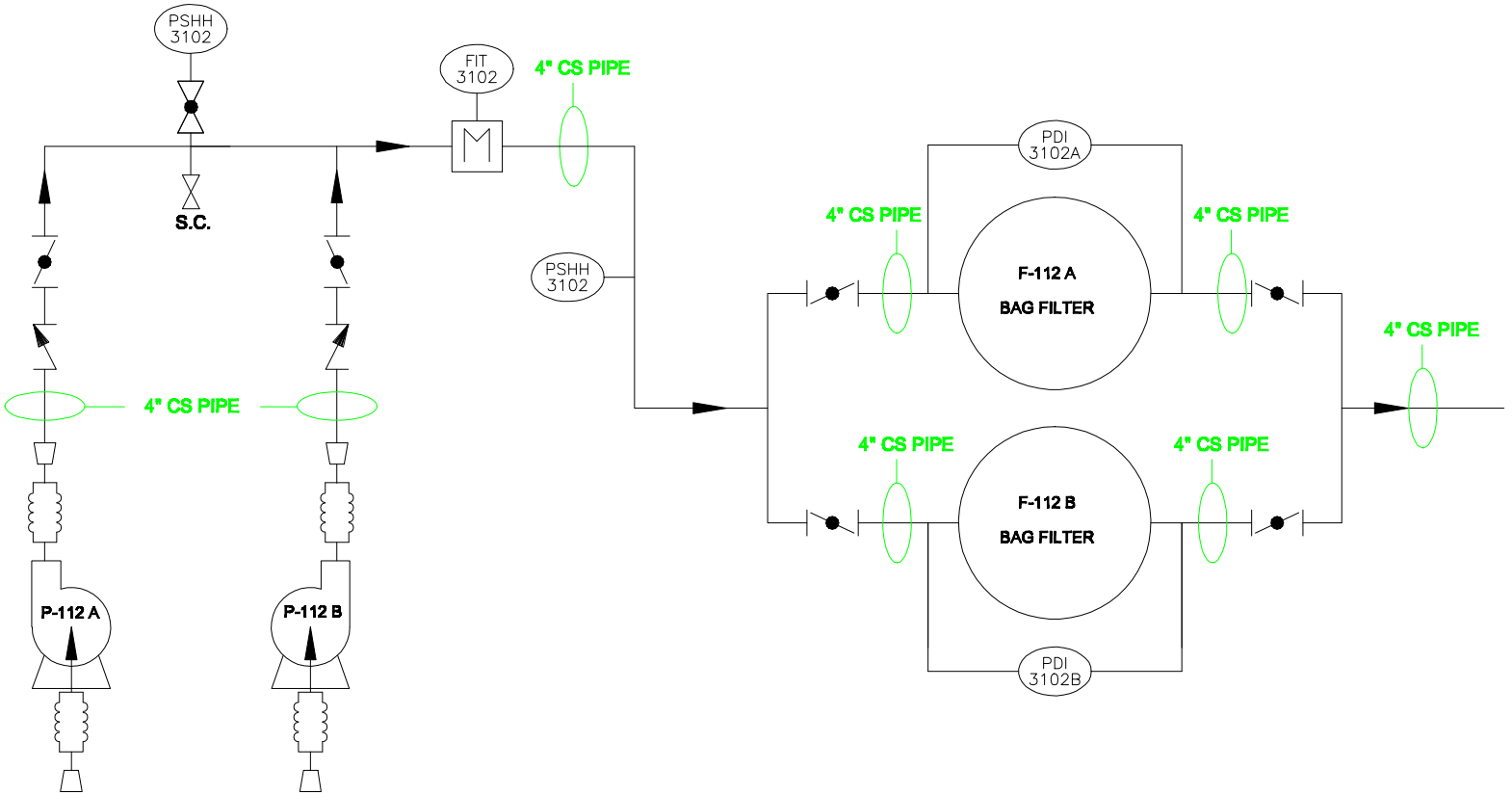

CONCENTRIC REDUCER

S.C. SAMPLE CONNECTION/PORT

CHECK VALVE

BALL VALVE

EXPANSION JOINT

BUTTERFLY VALVE

THIS DRAWING IS THE PROPERTY OF
Fliteway Technologies, Inc
2129 EAST BIRCHWOOD AVE
CUDAHY WI, 53110
414.483.5600 414.483.1957
AND IS NOT TO BE REPRODUCED WITHOUT WRITTEN PERMISSION

12/16/15

6'X10' FEED PUMP P&ID

TECHSAS INC.
KIRTLAND AFB

SIZE	FSCM NO.	DWG NO.	Q14617
SCALE NONE		SHEET	1 OF 1

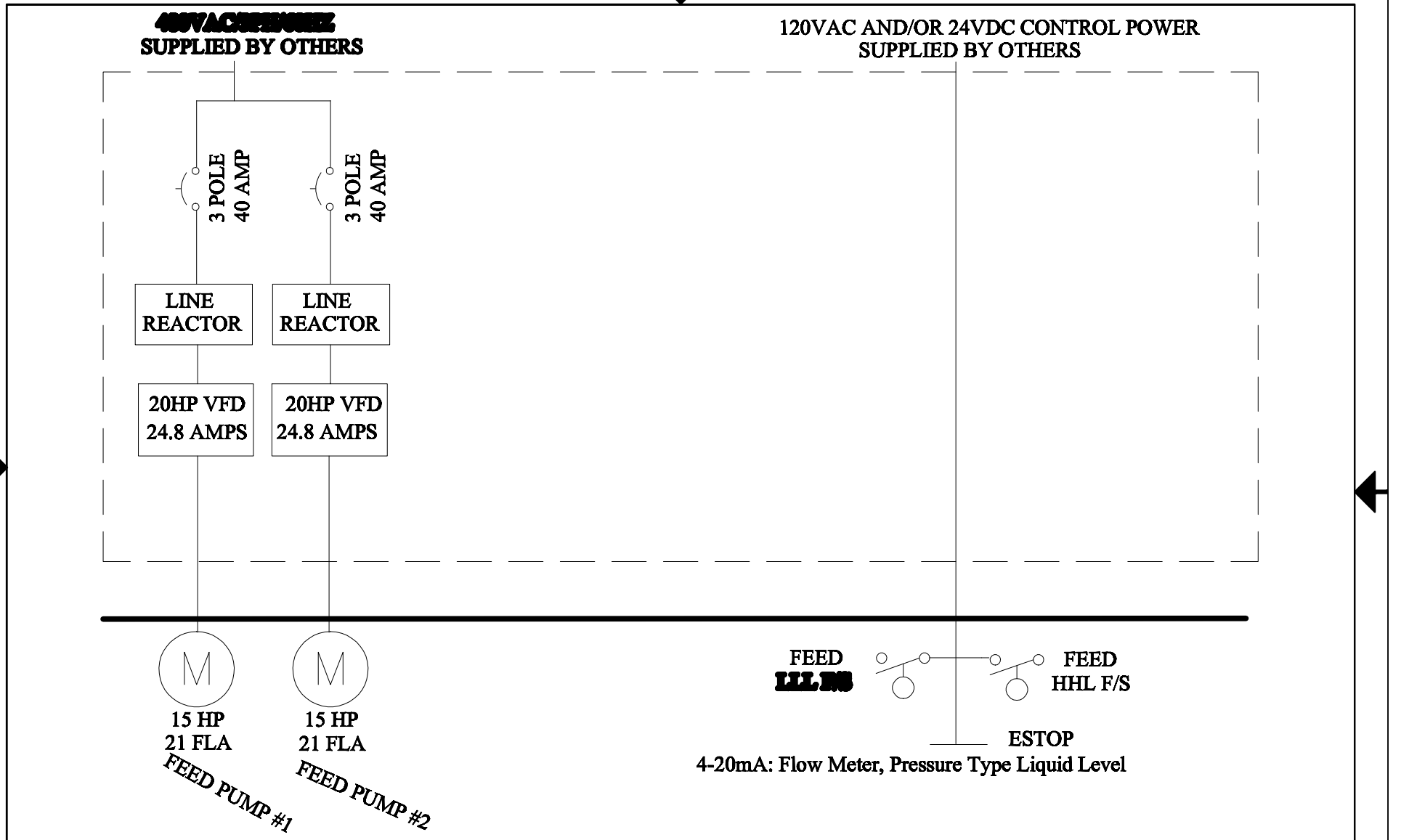

THIS DRAWING IS THE PROPERTY OF
Fliteway Technologies, Inc
2129 East Birchwood Avenue
Cudahy, WI 53110
414.483.5600 414.483.1957
AND IS NOT BE REPRODUCED
WITHOUT WRITTEN PERMISSION

ONE LINE ELECTRICAL DIAGRAM

FEED PUMP SKID

4/6/16

TECHSAS, Inc

SIZE	FSCM NO.	DWG NO.	REV
		Q14617	2

SCALE NONE | SHEET

FEED PUMP SKID #1

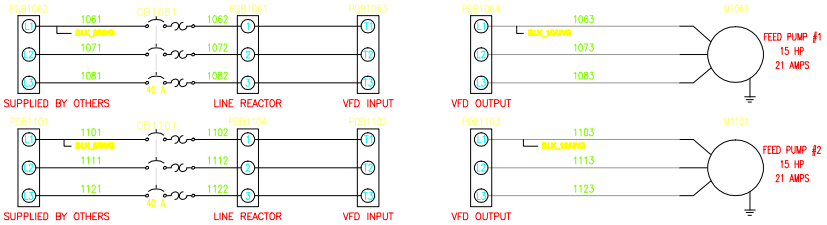

HIGH VOLTAGE PANEL

VFD FEED PUMP #1 WIRING

VFD_TB_12	VFD FAULT - PROVIDED OVER ETHERNET
VFD_TB_13	
VFD_TB_15	VFD RUNNING - PROVIDED OVER ETHERNET
VFD_TB_16	
VFD_TB_25	N
VFD_TB_28	120VAC VFD RUN SIGNAL (FROM MCP)

VFD FEED PUMP #2 WIRING

VFD_TB_12	VFD FAULT - PROVIDED OVER ETHERNET
VFD_TB_13	
VFD_TB_15	VFD RUNNING - PROVIDED OVER ETHERNET
VFD_TB_16	
VFD_TB_25	N
VFD_TB_28	120VAC VFD RUN SIGNAL (FROM MCP)

LOW VOLTAGE JUNCTION BOX

LOW VOLTAGE JBOX

HHL_F/S	120VAC OR 24VDC CONTROL POWER
HHL_F/S	TANK HHL ALARM (DRY CONTACT)
LL_F/S	
LL_F/S	TANK LLL (DRY CONTACT)
PRS._SW	
PRS._SW	HIGH PRESSURE SWITCH ALARM (N.O. DRY CONTACT)
FLOW_METER	24VDC CONTROL POWER
FLOW_METER	FLOW METER 4-20mA SIGNAL
FLOW_METER	FLOW METER SHIELD WIRE
P1_THRM_OL	120VAC CONTROL POWER
P1_THRM_OL	FEED PUMP #1 MOTOR THERMAL OVERLOAD WIRED TO VFD, VIEWED OVER ETHERNET
P2_THRM_OL	
P2_THRM_OL	FEED PUMP #2 MOTOR THERMAL OVERLOAD WIRED TO VFD, VIEWED OVER ETHERNET
LVL_TRANS	24VDC CONTROL POWER
LVL_TRANS	LEVEL TRANSMITTER 4-20mA SIGNAL
LVL_TRANS	LEVEL TRANSMITTER SHIELD WIRE

TREAT WATER PUMP SKID #2

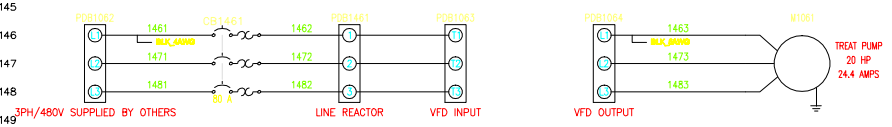

HIGH VOLTAGE PANEL

VFD TREAT PUMP WIRING

VFD_TB_12	VFD FAULT - PROVIDED OVER ETHERNET
VFD_TB_13	
VFD_TB_15	VFD RUNNING - PROVIDED OVER ETHERNET
VFD_TB_16	
VFD_TB_25	N
VFD_TB_28	120VAC VFD RUN SIGNAL (FROM MCP)

LOW VOLTAGE JUNCTION BOX

LOW VOLTAGE JBOX

HHL_F/S	120VAC OR 24VDC CONTROL POWER
HHL_F/S	TANK HHL ALARM (DRY CONTACT)
LL_F/S	
LL_F/S	TANK LLL (DRY CONTACT)
PRS._SW	
PRS._SW	HIGH PRESSURE SWITCH ALARM (N.O. DRY CONTACT)
FM_24V	24VDC CONTROL POWER
FM_TR	FLOW METER 4-20mA SIGNAL
FM_S	FLOW METER SHIELD WIRE
TP_THRM_OL	120VAC CONTROL POWER
TP_THRM_OL	TREATMENT PUMP MOTOR THERMAL OVERLOAD WIRED TO VFD, VIEWED OVER ETHERNET
LVL_TRANS	24VDC CONTROL POWER
LVL_TRANS	LEVEL TRANSMITTER 4-20mA SIGNAL
LVL_TRANS	LEVEL TRANSMITTER SHIELD WIRE

THIS PRINT AND ITS CONTENTS ARE THE PROPERTY OF FLITEWAY AND MUST NOT BE USED FOR ANY PURPOSE NOT AUTHORIZED BY FLITEWAY. DO NOT DISCLOSE, REPRODUCE OR OTHERWISE USE THIS PRINT OR ITS CONTENTS IN ANY MANNER DETRIMENTAL TO THE INTEREST OF FLITEWAY WITHOUT FLITEWAY'S PRIOR WRITTEN CONSENT. FLITEWAY RESERVES ALL RIGHTS OF DESIGN AND INVENTION TO THE EXTENT PERMITTED BY LAW.

CAD SYSTEM	ACADE
SCALE	1:1
UNITS	IN
FORMAT	D

Fliteway Technologies, Inc.
2129 East Birchwood Ave.
Cudahy, WI 53110

DRAWN BY	Josh
Q #	Q14617 R2
DESIGNED FOR	TECHSAS, Inc.
DESCRIPTION	
Drawing Number	

PLOTTED : 12-16-2014

CRANE ENGINEERING SALES

December 11, 2014

Proposal No: TS14-12-11 01
Item No: Feed Pumps

MODEL:3196 STi SIZE:2x3-6 QTY: 1

Operating Conditions

i-FRAME™

SERVICE

LIQUID	Groundwater Temp. 70.0 deg F, SP.GR 1.000, Viscosity 1.000 cp, rated / max. suction pressure 0.0 / 0.0 psi g
CAPACITY Rated	200.0 gpm
HEAD	100.0 (ft)

Performance at 3500 RPM per HI 14.6 1B basis power

PUBLISHED EFFY	66.5% (CDS)
RATED EFFY	63.5% with contract seal
RATED POWER	8.4 hp (incl. Mech. seal drag 0.37). (Run out 10.7 hp)
NPSHR	10.0 ft
DISCH PRESSURE (R)	45.9 psi g (50.0 psi g @ Shut off) based on 0.0 psi g rated suction pressure
PERF. CURVE	2228-6 (Rotation CW viewed from coupling end)
SHUT OFF HEAD	115.6 ft
MIN. FLOW	Continuous Stable: 35.5 gpm Hydraulic: 35.5 gpm Thermal: N/A

Materials

CONSTRUCTION	Ductile iron
CASING	Ductile iron (max.casing pressure @ rated temperature 250.0 psi g)
ST.BOX COVER	Ductile iron
IMPELLER	Ductile iron - Open (5.3750 in rated, max=6.0620 in, min=4.0000 in)
CASING GASKETS	Aramid Fiber with EPDM and Silicate Filler
IMPELLER O-RING	Teflon
SHAFT MATERIAL	SAE 4140
SHAFT SLEEVE	316SS
LUBRICATION	Flood oil
SEAL CHAMBER	Taper bore plus with axial ribs
GLAND	316SS Flush quench and drain
BEARINGS	6207 (Inboard) 5306 (Outboard)
COUPLING	Rexnord - Omega Rex Elastomer- ES-4 (standard orange element)-S.F. 1.00
COUPLING GUARD	Carbon steel
BASEPLATE	Cast iron camber top E00025A

Sealing Method

MECHANICAL SEAL	John Crane 5611Q X(1)F(50)1XO(58)1 (Carbon vs Silicon Carbide with Viton) - (Cartridge - Single)

Flanges

150# flat face

Frame Connections

Bearing frame drain
Frame cooler access
Oil fill connection

Frame features

Ductile iron frame adapter
Inpro VBXX-D Hybrid Bearing Isolators
Premium Severe Duty Thrust Bearings
i- ALERT™ Condition Monitor

Assembly and Testing

Casing & Cover - Standard hydro test
Impeller balanced to ISO G6.3

Painting

Goulds Blue standard painting

Warranty

5 Year Extended Warranty (All the components, manufactured by ITT Goulds pumps, in the liquid end and power end are covered).

Driver : Electric motor Manufacturer : Pump mfg's Choice

FURNISHED BY	Pump mfg	MOUNTED BY	Pump mfg
RATING	15.0 hp (11.2 KW)	ENCLOSURE	TEFC - Premium Efficiency
PHASE/FREQ/VOLTS	3/60 Hz/460	SPEED	3600 RPM
INSULATION/SF	F/1.15	FRAME	254T

Freight Terms

Freight invoices received from ITT partner carriers are proprietary information and cannot be divulged for any reason. ITT will provide an ITT generated freight invoice upon request.

Weights and Measurements

TOTAL NET UNIT WEIGHT / VOLUME	**490.5 lb / 7.2 ft³**
TOTAL GROSS UNIT WEIGHT / GROSS VOLUME	**604.5 lb / 22.8 ft³**

Program Version 1.50.0.1

Drawing Revision Limit

Drawings returned with status approved as noted or revise and re-submit will be corrected and resubmitted only once. Thereafter, additional comments or revisions to these drawings will incur a charge of $250 per drawing.

Our offer does not include specific review and incorporation of any Statutory or Regulatory Requirements and the offer is limited to the requirements of the design specifications. Should any Statutory or Regulatory requirements need to be reviewed and incorporated then the Customer is responsible to identify those and provide copies for review and revision of our offer.

Our quotation is offered in accordance with our comments and exceptions identified in our proposal.

Click here to download the pump Bulletin

Click here to learn more about the new i-FRAME™

GOULDS PUMPS

OUTLINE DRAWING

Model 3196 STi
Size 2x3-6

ITT

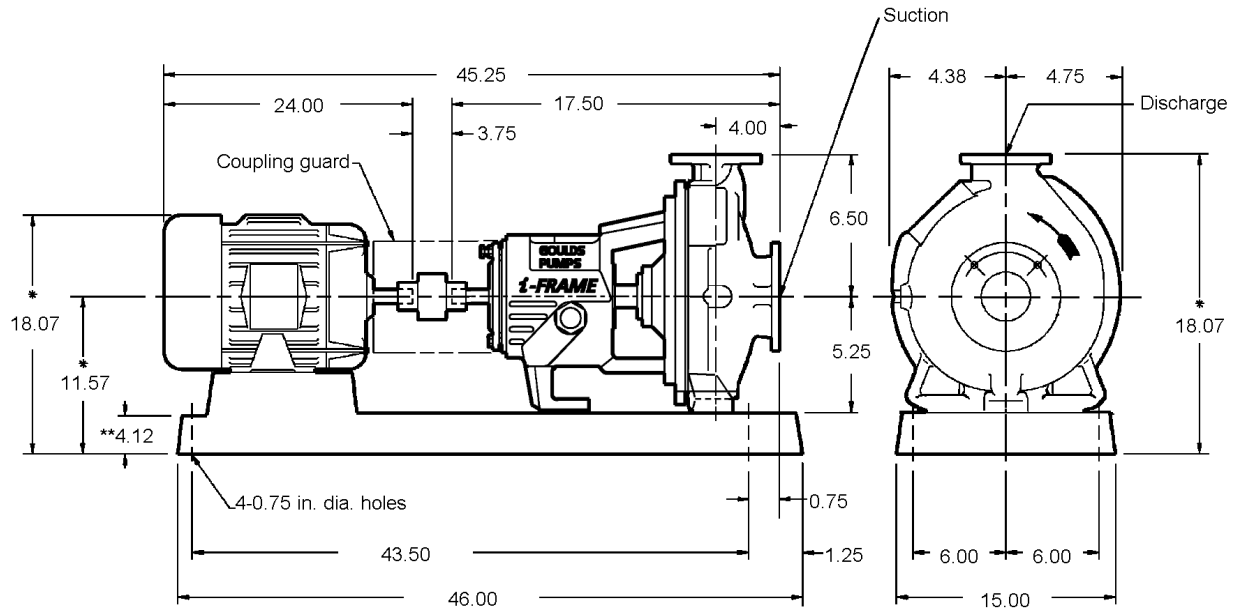

Pump Specification

SUCT.FLANGE SIZE	*3"*	DRILLING	*ANSI 150#*	FACING	*FF*	FINISH	*SERRATED*
DISCH.FLANGE SIZE	*2"*	DRILLING	*ANSI 150#*	FACING	*FF*	FINISH	*SERRATED*
PUMP ROTATION (LOOKING AT PUMP FROM MOTOR)			*CW*				
TYPE OF LUBRICATION	*FLOOD OIL*					COOLED	*NO*
TYPE OF STUFFING BOX	*TAPER BORE PLUS WITH AXIAL RIBS*					COOLED	*NO*
TYPE OF SEALING	*MECHANICAL SEAL*						

Weights and Measurements

PUMP	*95.0 lb*
MOTOR/CPLG	*270.0/5.5 lb*
BASEPLATE	*120.0 lb*
TOTAL	*490.5 lb*
GR.VOLUME w/BOX	*22.8 ft³*
GR.WEIGHT w/BOX	*604.5 lb*

Motor Specification

MOTOR BY	*PUMP MFG*	MOUNT BY	*PUMP MFG*	MFG.	*PUMP MFG'S CHOICE*
FRAME	*254T*	POWER	*15.0 hp*	RPM	*3600*
PHASE	*3*	FREQUENCY	*60 HZ*	VOLTS	*460*
INSULATION	*F*	S.F.	*1.15*		
ENCLOSURE	*TEFC - PREMIUM EFFICIENCY*				

Notes and References

- MTR DIMENSIONS ARE APPROXIMATE
- INSTALL FOUNDATION BOLTS IN PIPE SLEEVES
- ALLOW FROM 0.75 to 1.50in. FOR GROUTING. SEE INSTRUCTION BOOK FOR DETAILS.

*Tolerance is -0.50 +0

** Foundation bolt grip thickness

Auxiliary Specification

COUPLING BY	*PUMP MFG*	CPLG TYPE	*REXNORD OMEGA REX ELASTOMER- ES-4 (STANDARD ORANGE*
CPL GUARD BY	*PUMP MFG*	CPLG GUARD MATL	*CARBON STEEL*
BASEPLATE	*CAST IRON CAMBER TOP E00025A*		
MECH.SEAL	*JOHN CRANE 5611Q X(1)F(50)1XO(58)1 (CARBON VS SILICON CARBIDE WITH VITON)*		

FOR PUMP TAPPED OPENINGS REFER TO DWG.:
TTS14-12-11 01 / Feed Pumps

DRAWING IS FOR REFERENCE ONLY.
NOT CERTIFIED FOR CONSTRUCTION UNLESS SIGNED.

Customer: CRANE ENGINEERING SALES
Serial No:
Customer P.O. No:
Item No: Feed Pumps
End User: .
Service:

Copyright 2014
ITT Corp

All dimensions are in inches.
Drawing is not to scale
Weights (lbs) are approximate

DRAWING NO TS14-12-11 01/Feed Pumps

Model: 3196	Size: 2x3-6	Group: STi	60Hz	RPM: 3500	Stages: 1

Job/Inq.No. :
Purchaser : CRANE ENGINEERING SALES
End User: .
Item/Equip.No. : Feed Pumps
Service :
Order No. :

Issued by : Tom Schroeder
Quotation No. : TS14-12-11 01
Certified By :

Date : 12/11/2014
Rev. : 0

Operating Conditions

Liquid:	Groundwater	Published Efficiency:	66.5 %	Suction Specific Speed:	8,473 gpm(US) ft
Temp.:	70.0 deg F	Rated Pump Efficiency:	63.5 %	Min. Hydraulic Flow:	35.5 gpm
S.G./Visc.:	1.000/1.000 cp	Rated Total Power:	8.4 hp	Min. Thermal Flow:	N/A
Flow:	200.0 gpm	Non-Overloading Power:	10.7 hp		
TDH:	100.0 ft	Imp. Dia. First 1 Stg(s):	5.3750 in		
NPSHa:	0.0 ft	NPSHr:	10.0 ft		
Solid size:		Shut off Head:	115.6 ft		
% Susp. Solids (by wtg):		Vapor Press:		Max. Solids Size:	0.3750 in

Pump Performance

Notes: 1. Power and efficiency losses are not reflected on the curve below.
2. Elevated temperature effects on performance are not included.

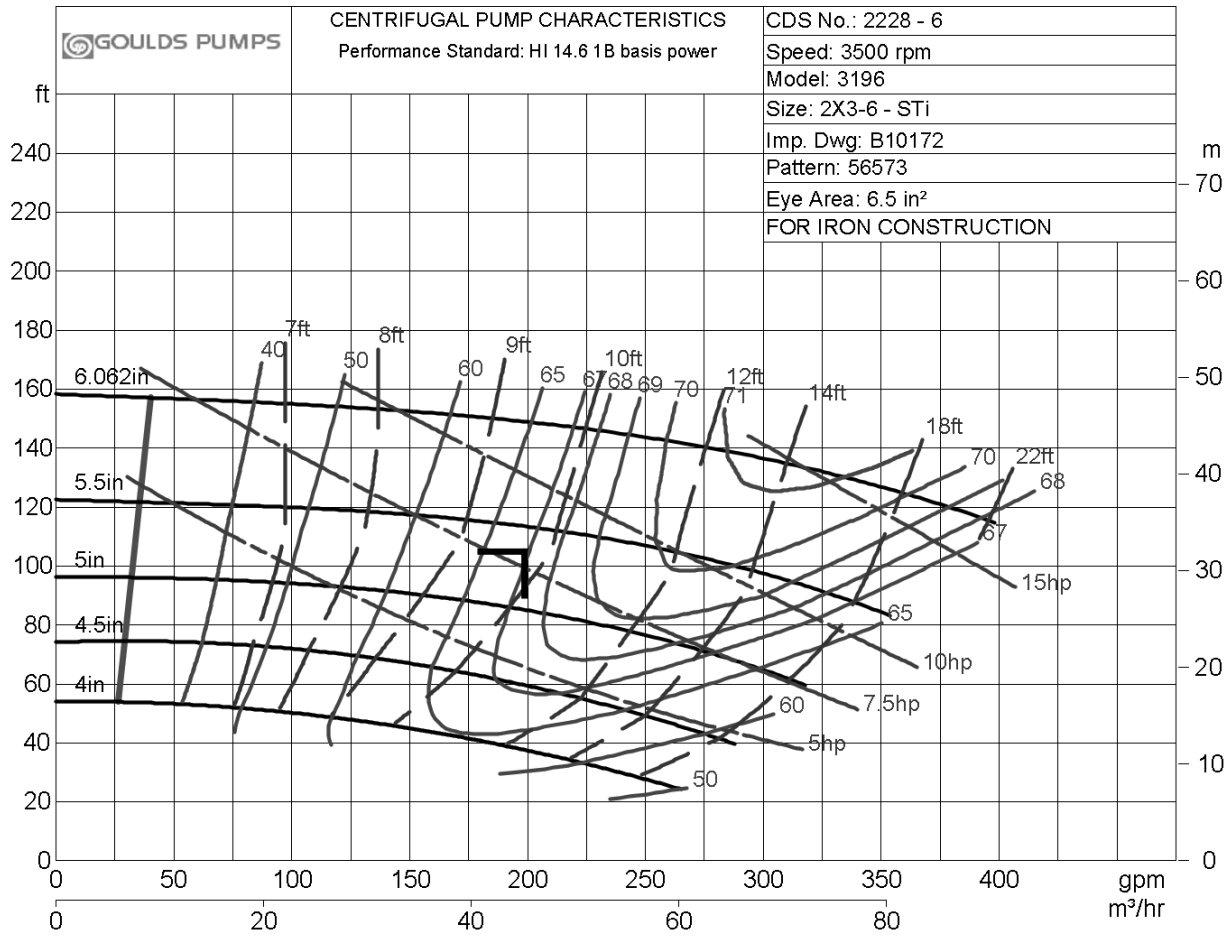

ITT

GOULDS PUMPS

Installation, Operation, and Maintenance Manual

Model 3196 i-FRAME

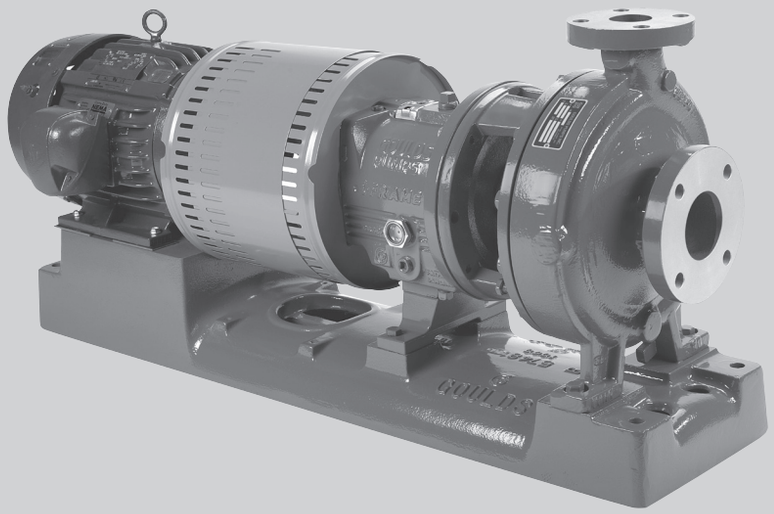

ITT

ENGINEERED FOR LIFE

Table of Contents

Introduction and Safety 4
Introduction 4
Safety 4
Safety terminology and symbols 5
Environmental safety 5
User safety 6
Ex-approved products 8
Product approval standards 8
Product warranty 9

Transportation and Storage 11
Inspect the delivery 11
Inspect the package 11
Inspect the unit 11
Transportation guidelines 11
Pump handling 11
Lifting methods 11
Storage guidelines 14
Pump storage requirements 14
Frostproofing 15

Product Description 16
General description 3196 16
Part description 3196 17
General description i-ALERT™ Condition Monitor 18
Nameplate information 19

Installation 22
Preinstallation 22
Pump location guidelines 22
Foundation requirements 22
Baseplate-mounting procedures 23
Prepare the baseplate for mounting 23
Install the baseplate using shims or wedges 23
Install the baseplate using jackscrews 24
Install the baseplate using spring mounting 27
Install the baseplate using stilt mounting 28
Baseplate-leveling worksheet 30
Install the pump, driver, and coupling 31
Pump-to-driver alignment 31
Alignment checks 31
Permitted indicator values for alignment checks 32
Alignment measurement guidelines 32
Attach the dial indicators for alignment 32
Pump-to-driver alignment instructions 33
C-face adapter 36
Grout the baseplate 36
Piping checklists 37
General piping checklist 37
Suction-piping checklist 39
Discharge piping checklist 41

Commissioning, Startup, Operation, and Shutdown 43
Preparation for startup 43
Remove the coupling guard 44
Check the rotation - Frame Mounted 46
Impeller-clearance check 46
Impeller clearances (3196 and HT 3196) 47
Impeller-clearance setting 47
Set the impeller clearance - dial indicator method (all except CV 3196) 47
Set the impeller clearance - feeler gauge method (all except CV 3196) 48
Couple the pump and driver 49
Install the coupling guard 50
Bearing lubrication 54
Shaft-sealing options 56
Mechanical seal options 56
Connection of sealing liquid for mechanical seals 56
Packed stuffing box option 57
Connection of sealing liquid for a packed stuffing box 57
Dynamic-seal option 57
Set an elastomeric face seal 58
Pump priming 58
Prime the pump with the suction supply above the pump 58
Prime the pump with the suction supply below the pump 59
Other methods of priming the pump 60
Start the pump 60
Activate the i-ALERT Condition Monitor 61
i-ALERT™ Condition Monitor routine operation 62
Pump operation precautions 62
Shut down the pump 63
Deactivate the i-ALERT™ Condition Monitor 63
Reset the i-ALERT™ Condition Monitor 64
Make the final alignment of the pump and driver 64

Maintenance 65
Maintenance schedule 65
Bearing maintenance 66
Lubricating-oil requirements 66
Regrease the grease-lubricated bearings 67
Lubricate the bearings after a shutdown period 68
Shaft seal maintenance 68
Mechanical-seal maintenance 68
Packed stuffing-box maintenance 69
Dynamic-seal maintenance 69
Disassembly 70
Disassembly precautions 70
Tools required 70
Drain the pump 71
Remove the coupling 71
Remove the back pull-out assembly 71
Remove the coupling hub 73
Impeller removal 74
Seal-chamber cover removal 76
Remove the seal-chamber cover (3196, CV 3196, HT 3196, LF 3196, 3796) 76
Remove the stuffing-box cover (3196, CV 3196, HT 3196, LF 3196, 3796) 77
Remove the dynamic seal 78
Remove the frame adapter (MTi, LTi, XLT-i, i17) 79
Remove the inboard labyrinth oil seal 79
Power-end disassembly 79

Disassemble the bearing frame 88
Guidelines for i-ALERT™ Condition Monitor disposal 89
Disassemble the C-face adapter 89
Pre-assembly inspections 90
Replacement guidelines 90
Shaft and sleeve replacement guidelines 92
Bearing-frame inspection 92
C-face adapter inspection 93
Seal chamber and stuffing box cover inspection 94
Bearings inspection 95
Bearing-housing inspection 95
Bearing fits and tolerances 97
Reassembly 98
Assemble the rotating element and the bearing frame (STi and MTi) 98
Assemble the rotating element and the bearing frame (STi and MTi with duplex bearings) 100
Assemble the rotating element and the bearing frame (LTi) 103
Assemble the rotating element and the bearing frame (XLT-i and i17) 106
Assemble the rotating element and the bearing frame (XLT-i and i17 with duplex bearings) 109
Assemble the frame 113
INPRO labyrinth oil seal description 116
Assemble the INPRO labyrinth oil seal 117
Assemble the C-face adapter 117
Shaft sealing 118
Install the impeller 124
Attach the i-ALERT™ Condition Monitor to the pump 126
Post-assembly checks 127
Install the back pull-out assembly (except HT 3196) 127
Assembly references 129
Spare parts 130
Interchangeability drawings 130
3196 interchangeability 130
Lubrication conversion 131
Frame lubrication conversion 131
Convert from greased-for-life or regreaseable to oil-lubricated bearings 132
Conversion from flood-oil to pure-oil mist 133
Convert from flood oil to regreaseable 133

Troubleshooting 134
Operation troubleshooting 134
Alignment troubleshooting 135
Assembly troubleshooting 135
i-ALERT™ Condition Monitor troubleshooting 135

Parts Listings and Cross-Sectionals 136
Parts list 136

Certification: CE or CE ATEX 145
Certificates of conformance 145

Other Relevant Documentation or Manuals 151

Local ITT Contacts 152
Regional offices 152

Introduction and Safety

Introduction

Purpose of this manual

The purpose of this manual is to provide necessary information for:

- Installation
- Operation
- Maintenance

CAUTION:
Read this manual carefully before installing and using the product. Improper use of the product can cause personal injury and damage to property, and may void the warranty.

NOTICE:
Save this manual for future reference, and keep it readily available at the location of the unit.

Requesting other information

Special versions can be supplied with supplementary instruction leaflets. See the sales contract for any modifications or special version characteristics. For instructions, situations, or events that are not considered in this manual or in the sales documents, please contact the nearest ITT representative.

Always specify the exact product type and identification code when requesting technical information or spare parts.

Safety

WARNING:

- The operator must be aware of safety precautions to prevent physical injury.
- Any pressure-containing device can explode, rupture, or discharge its contents if it is over-pressurized. Take all necessary measures to avoid over-pressurization.
- Operating, installing, or maintaining the unit in any way that is not covered in this manual could cause death, serious personal injury, or damage to the equipment. This includes any modification to the equipment or use of parts not provided by ITT. If there is a question regarding the intended use of the equipment, please contact an ITT representative before proceeding.
- This manual clearly identifies accepted methods for disassembling units. These methods must be adhered to. Trapped liquid can rapidly expand and result in a violent explosion and injury. Never apply heat to impellers, propellers, or their retaining devices to aid in their removal unless explicitly stated in this manual.
- If the pump/motor is damaged or leaking, do not operate as it may cause an electric shock, fire, explosion, liberation of toxic fumes, physical harm, or environmental damage. Correct/repair the problem prior to putting back in service.
- Do not change the service application without the approval of an authorized ITT representative.

CAUTION:
You must observe the instructions contained in this manual. Failure to do so could result in physical injury, damage, or delays.

Safety terminology and symbols

About safety messages

It is extremely important that you read, understand, and follow the safety messages and regulations carefully before handling the product. They are published to help prevent these hazards:

- Personal accidents and health problems
- Damage to the product
- Product malfunction

Hazard levels

Hazard level	Indication
DANGER:	A hazardous situation which, if not avoided, will result in death or serious injury
WARNING:	A hazardous situation which, if not avoided, could result in death or serious injury
CAUTION:	A hazardous situation which, if not avoided, could result in minor or moderate injury
NOTICE:	• A potential situation which, if not avoided, could result in undesirable conditions • A practice not related to personal injury

Hazard categories

Hazard categories can either fall under hazard levels or let specific symbols replace the ordinary hazard level symbols.

Electrical hazards are indicated by the following specific symbol:

Electrical Hazard:

These are examples of other categories that can occur. They fall under the ordinary hazard levels and may use complementing symbols:

- Crush hazard
- Cutting hazard
- Arc flash hazard

The Ex symbol

The Ex symbol indicates safety regulations for Ex-approved products when used in atmospheres that are potentially explosive or flammable.

Environmental safety

The work area

Always keep the station clean to avoid and/or discover emissions.

Waste and emissions regulations

Observe these safety regulations regarding waste and emissions:

- Appropriately dispose of all waste.
- Handle and dispose of the processed liquid in compliance with applicable environmental regulations.
- Clean up all spills in accordance with safety and environmental procedures.
- Report all environmental emissions to the appropriate authorities.

WARNING:
Do NOT send the product to the ITT manufacturer if it has been contaminated by any nuclear radiation. Inform ITT so that accurate actions can take place.

Electrical installation

For electrical installation recycling requirements, consult your local electric utility.

Recycling guidelines

Always follow local laws and regulations regarding recycling.

User safety

General safety rules

These safety rules apply:

- Always keep the work area clean.
- Pay attention to the risks presented by gas and vapors in the work area.
- Avoid all electrical dangers. Pay attention to the risks of electric shock or arc flash hazards.
- Always bear in mind the risk of drowning, electrical accidents, and burn injuries.

Safety equipment

Use safety equipment according to the company regulations. Use this safety equipment within the work area:

- Helmet
- Safety goggles, preferably with side shields
- Protective shoes
- Protective gloves
- Gas mask
- Hearing protection
- First-aid kit
- Safety devices

NOTICE:
Never operate a unit unless safety devices are installed. Also see specific information about safety devices in other chapters of this manual.

Electrical connections

Electrical connections must be made by certified electricians in compliance with all international, national, state, and local regulations. For more information about requirements, see sections dealing specifically with electrical connections.

Precautions before work

Observe these safety precautions before you work with the product or are in connection with the product:

- Provide a suitable barrier around the work area, for example, a guard rail.
- Make sure that all safety guards are in place and secure.
- Make sure that you have a clear path of retreat.
- Make sure that the product cannot roll or fall over and injure people or damage property.
- Make sure that the lifting equipment is in good condition.
- Use a lifting harness, a safety line, and a breathing device as required.
- Allow all system and pump components to cool before you handle them.
- Make sure that the product has been thoroughly cleaned.
- Disconnect and lock out power before you service the pump.
- Check the explosion risk before you weld or use electric hand tools.

Precautions during work

Observe these safety precautions when you work with the product or are in connection with the product:

CAUTION:
Read this manual carefully before installing and using the product. Improper use of the product can cause personal injury and damage to property, and may void the warranty.

- Never work alone.
- Always wear protective clothing and hand protection.
- Stay clear of suspended loads.
- Always lift the product by its lifting device.
- Beware of the risk of a sudden start if the product is used with an automatic level control.
- Beware of the starting jerk, which can be powerful.
- Rinse the components in water after you disassemble the pump.
- Do not exceed the maximum working pressure of the pump.
- Do not open any vent or drain valve or remove any plugs while the system is pressurized. Make sure that the pump is isolated from the system and that pressure is relieved before you disassemble the pump, remove plugs, or disconnect piping.
- Never operate a pump without a properly installed coupling guard.

Hazardous liquids

The product is designed for use in liquids that can be hazardous to your health. Observe these rules when you work with the product:

- Make sure that all personnel who work with biologically hazardous liquids are vaccinated against diseases to which they may be exposed.
- Observe strict personal cleanliness.
- A small amount of liquid will be present in certain areas like the seal chamber.

Wash the skin and eyes

1. Follow these procedures for chemicals or hazardous fluids that have come into contact with your eyes or your skin:

Condition	Action
Chemicals or hazardous fluids in eyes	1. Hold your eyelids apart forcibly with your fingers. 2. Rinse the eyes with eyewash or running water for at least 15 minutes. 3. Seek medical attention.
Chemicals or hazardous fluids on skin	1. Remove contaminated clothing. 2. Wash the skin with soap and water for at least 1 minute. 3. Seek medical attention, if necessary.

Ex-approved products

Follow these special handling instructions if you have an Ex-approved unit.

Personnel requirements

These are the personnel requirements for Ex-approved products in potentially explosive atmospheres:

- All work on the product must be carried out by certified electricians and ITT-authorized mechanics. Special rules apply to installations in explosive atmospheres.
- All users must know about the risks of electric current and the chemical and physical characteristics of the gas, the vapor, or both present in hazardous areas.
- Any maintenance for Ex-approved products must conform to international and national standards (for example, IEC/EN 60079-17).

ITT disclaims all responsibility for work done by untrained and unauthorized personnel.

Product and product handling requirements

These are the product and product handling requirements for Ex-approved products in potentially explosive atmospheres:

- Only use the product in accordance with the approved motor data.
- The Ex-approved product must never run dry during normal operation. Dry running during service and inspection is only permitted outside the classified area.
- Before you start work on the product, make sure that the product and the control panel are isolated from the power supply and the control circuit, so they cannot be energized.
- Do not open the product while it is energized or in an explosive gas atmosphere.
- Make sure that thermal contacts are connected to a protection circuit according to the approval classification of the product, and that they are in use.
- Intrinsically safe circuits are normally required for the automatic level-control system by the level regulator if mounted in zone 0.
- The yield stress of fasteners must be in accordance with the approval drawing and the product specification.
- Do not modify the equipment without approval from an authorized ITT representative.
- Only use parts that are provided by an authorized ITT representative.

Product approval standards

Regular standards

All standard products are approved according to CSA standards in Canada and UL standards in USA. The drive unit degree of protection follows IP68. See the nameplate for maximum submersion, according to standard IEC 60529.

All electrical ratings and performance of the motors comply with IEC 600341.

Explosion-proofing standards

All explosion-proof products for use in explosive atmospheres are designed in compliance with one or more of the following approvals:

- EN, ATEX Directive 94/9/EC
- FM According to NEC
  - Class 1 Div 1 Groups “C”, and “D”
  - Class 2 Div 1 Groups “E”, “F”, and “G”
  - Class 3 Div 1 Hazardous Locations

ATEX/IECEx:

- Group: IIC

- Category: Ex ia
- Temperature Class: T4 (for ambients up to 100ºC)
- ATEX Marking: Ex II 1 G

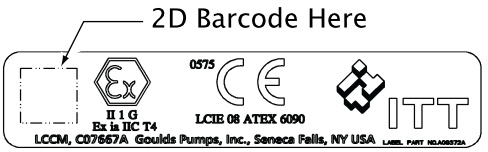

CSA certification

Intrinsically safe for:

- Class I, Div. 1, Groups A, B, C, D
- Class II, Div. 1, Groups E, F, G
- Class III
- Certified to Canadian and US requirements

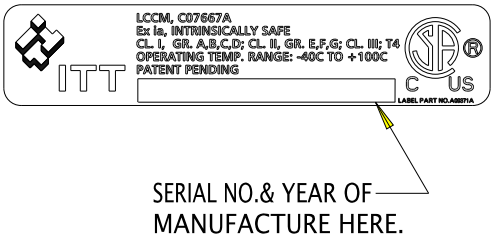

Product warranty

Coverage

ITT undertakes to remedy faults in products from ITT under these conditions:

- The faults are due to defects in design, materials, or workmanship.
- The faults are reported to an ITT representative within the warranty period.
- The product is used only under the conditions described in this manual.
- The monitoring equipment incorporated in the product is correctly connected and in use.
- All service and repair work is done by ITT-authorized personnel.
- Genuine ITT parts are used.
- Only Ex-approved spare parts and accessories authorized by ITT are used in Ex-approved products.

Limitations

The warranty does not cover faults caused by these situations:

- Deficient maintenance
- Improper installation
- Modifications or changes to the product and installation made without consulting ITT
- Incorrectly executed repair work
- Normal wear and tear

ITT assumes no liability for these situations:

- Bodily injuries
- Material damages
- Economic losses

Warranty claim

ITT products are high-quality products with expected reliable operation and long life. However, should the need arise for a warranty claim, then contact your ITT representative.

Transportation and Storage

Inspect the delivery

Inspect the package

1. Inspect the package for damaged or missing items upon delivery.
2. Note any damaged or missing items on the receipt and freight bill.
3. File a claim with the shipping company if anything is out of order.
   If the product has been picked up at a distributor, make a claim directly to the distributor.

Inspect the unit

1. Remove packing materials from the product.
   Dispose of all packing materials in accordance with local regulations.
2. Inspect the product to determine if any parts have been damaged or are missing.
3. If applicable, unfasten the product by removing any screws, bolts, or straps.
   For your personal safety, be careful when you handle nails and straps.
4. Contact your sales representative if anything is out of order.

Transportation guidelines

Pump handling

WARNING:

- Make sure that the unit cannot roll or fall over and injure people or damage property.
- These pumps might use carbon or ceramic silicon carbide components. Do not drop the pump or subject it to shock loads as this can damage the internal ceramic components.

NOTICE:

Use a forklift truck or an overhead crane with sufficient capacity to move the pallet with the pump unit on top. Failure to do so can result in equipment damage.

Lifting methods

WARNING:

- All lifting must be done in compliance with all applicable regulations/standards.
- Assembled units and their components are heavy. Failure to properly lift and support this equipment can result in serious physical injury and/or equipment damage. Lift equipment only at the specifically identified lifting points. Lifting devices such as hoist rings, shackles, slings, and spreaders must be rated, selected, and used for the entire load being lifted.
- Assembled units and their components are heavy. Failure to properly lift and support this equipment can result in serious physical injury and/or equipment damage. Lift equipment only at the specifically identified lifting points. Lifting devices such as eyebolts, slings, and spreaders must be rated, selected, and used for the entire load being lifted.
- Crush hazard. The unit and the components can be heavy. Use proper lifting methods and wear steel-toed shoes at all times.
- Do not attach sling ropes to shaft ends.

Table 1: Methods

Pump type	Lifting method
A bare pump without lifting handles	Use a suitable sling attached properly to solid points like the casing, the flanges, or the frames.
A bare pump with lifting handles	Lift the pump by the handles.
A base-mounted pump	Use slings under the pump casing and the drive unit, or under the base rails.

Pump type	Lifting method
Mounted on top of a Polyshield ANSI Combo	See separate information regarding the Polyshield ANSI Combo.

Examples

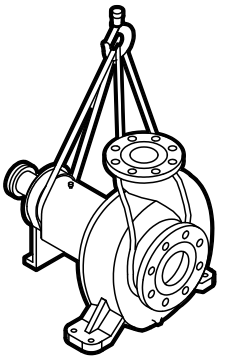

Figure 1: Example of a proper lifting method

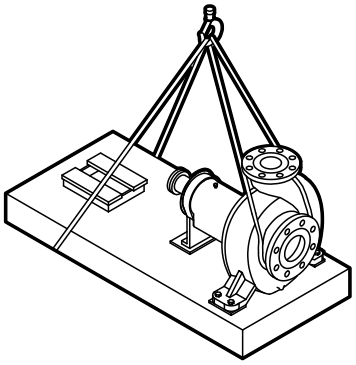

NOTICE:
Do not use this lifting method to lift a Polyshield ANSI Combo with the pump and motor mounted. Doing so may result in equipment damage.

Figure 2: Example of a proper lifting method

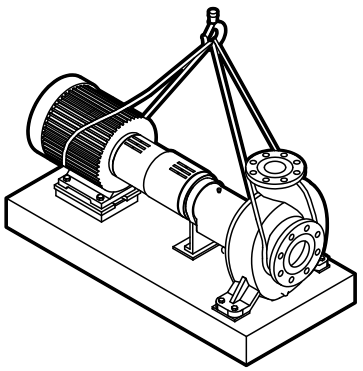

NOTICE:
Do not use this lifting method to lift a Polyshield ANSI Combo with the pump and motor mounted. Doing so may result in equipment damage.

Figure 3: Example of a proper lifting method

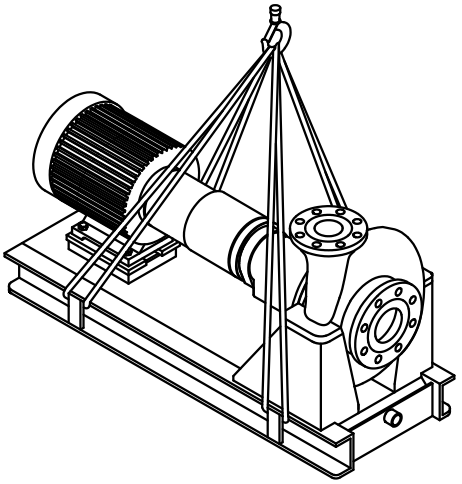

Figure 4: Example of a proper lifting method

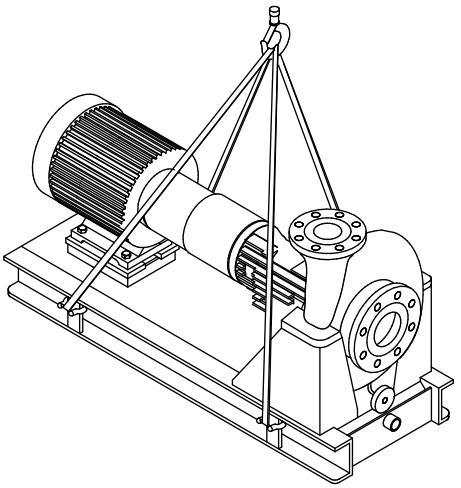

Figure 5: Example of a proper lifting method

NOTICE:
When lifting a unit that does not have a way to secure the strap on the suction flange, you must secure the strap around the frame adapter. Failure to do so may result in equipment damage.

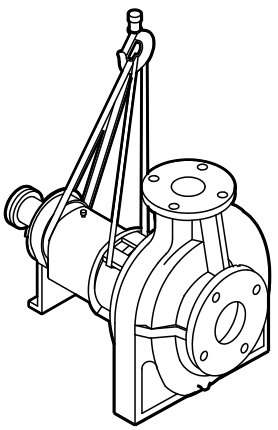

Figure 6: Example of a proper lifting method with a strap secured around the frame adapter

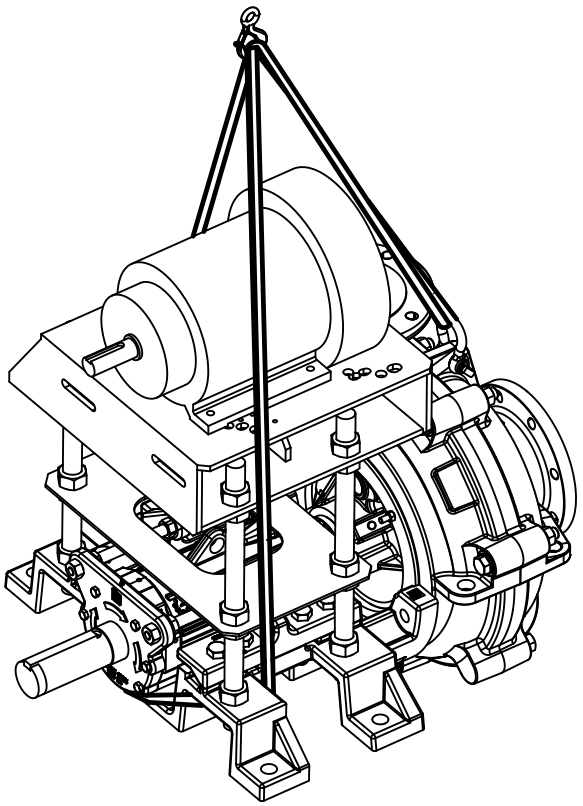

Figure 7: Example of offset overhead motor mount pump proper lifting method

Storage guidelines

Pump storage requirements

Storage requirements depend on the amount of time that you store the unit. The normal packaging is designed only to protect the unit during shipping.

Length of time in storage	Storage requirements
Upon receipt/short-term (less than six months)	• Store in a covered and dry location. • Store the unit free from dirt and vibrations.
Long-term (more than six months)	• Store in a covered and dry location. • Store the unit free from heat, dirt, and vibrations. • Rotate the shaft by hand several times at least every three months.

NOTICE:
Risk of damage to the mechanical seal or shaft sleeve on units supplied with cartridge mechanical seals. Make sure to install and tighten the centering clips and loosen the set screws in the seal locking ring.

Treat bearing and machined surfaces so that they are well preserved. Refer to drive unit and coupling manufacturers for their long-term storage procedures.

You can purchase long-term storage treatment with the initial unit order or you can purchase it and apply it after the units are already in the field. Contact your local ITT sales representative.

Frostproofing

Table 2: Situations when the pump is or is not frostproof

Situation	Condition
Operating	The pump is frostproof.
Immersed in a liquid	The pump is frostproof.
Lifted out of a liquid into a temperature below freezing	The impeller might freeze.

Product Description

General description 3196

The 3196 is a horizontal overhung, open impeller, centrifugal pump. This pump is ANSI B73.1 compliant.
The model is based on 5 power ends and 29 hydraulic sizes.

Figure 8: 3196 pump

This table shows the number of hydraulic sizes available for each drive-unit size group.

Drive-unit size group	Number of hydraulic sizes
STi	5
MTi	15
LTi	15
XLT-i	5
i-17	4

Part description 3196

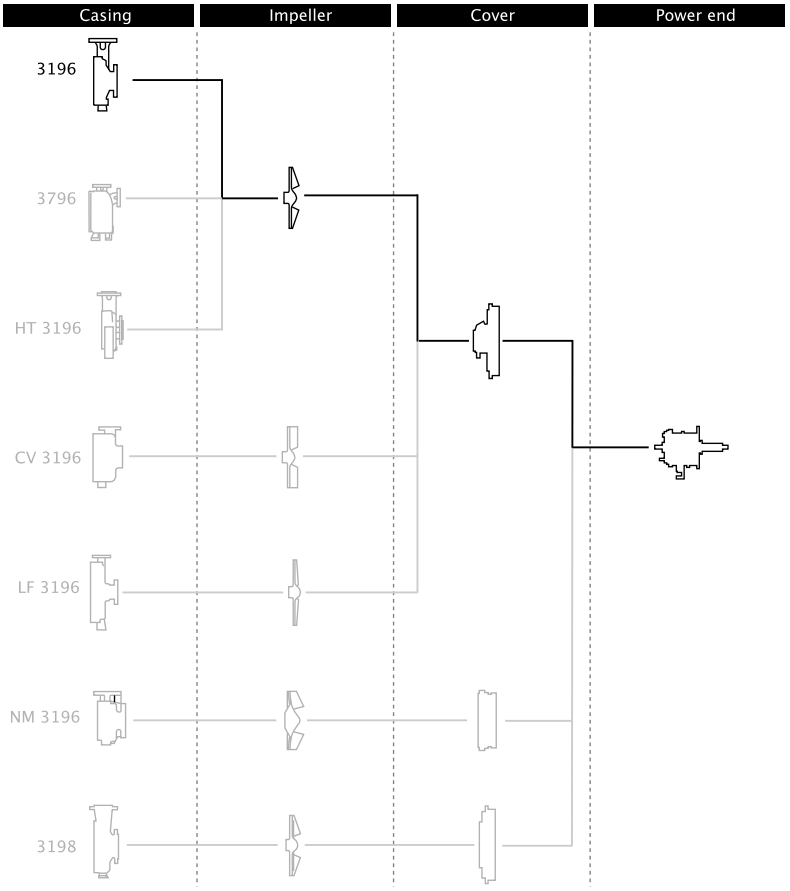

Figure 9: 3196 part description

Table 3: Casing

This table describes the pump casing parts.

Part	Description
Discharge	Top-centerline
Casing ventilation	Self venting
Gasket	Fully confined
Mounting method	Integral foot support for maximum resistance to misalignment due to piping loads.
Standard flange	ANSI flat-faced serrated flange
Optional flanges	One of the following flanges can be used: • ANSI class 150 raised-face serrated flange • ANSI class 300 flat-face serrated flange • ANSI class 300 raised-face serrated flange

Impeller

The impeller is

- fully open
- screwed onto the shaft

The threads are sealed from the pumped liquid by a Teflon O-ring for the 3196.

Cover

Standard seal

- The 3196 is available with a stuffing-box cover designed for a packing and a BigBore or a TaperBore PLUS seal chamber.

Optional seal

- a dynamic seal is available which uses a repeller to pump liquid out of the stuffing box while the pump operates. A static seal prevents leakage when the pump is shut down.

Table 4: Power end

This table describes the main parts of the power end.

Part	Description
Frame adapter	The ductile iron frame adapter has • a machined rabbet fitted to the seal chamber/ stuffing box cover • a precision dowel pin fitted to the bearing frame.

Power end	• Flood-oil lubrication is standard.
	• No machining is required to convert from oil to grease or oil-mist lubrication. Regreasable bearings and oil-mist lubrication are optional.
	• The oil level is checked through a sight glass.
	• The power end is sealed with labyrinth seals.
	• The power end is made in the following sizes:
	  • STi
	  • MTi
	  • LTi
	  • XLT-i
	  • i-17

Shaft	The shaft is available with or without a sleeve.
Bearings	The inboard bearing • carries only radial loads. • is free to float axially in the frame. • is a single-row deep-groove ball bearing The outboard bearing • is shouldered and locked to the shaft and housing to enable it to carry radial and thrust loads. • is a double-row angular-contact bearing, except for the LTi which uses a pair of single-row angular-contact ball bearings mounted back-to-back.

General description i-ALERT™ Condition Monitor

Description

The i-ALERT Condition Monitor is a compact, battery-operated monitoring device that continuously measures the vibration and temperature of the pump power end. The condition monitor uses blinking red LEDs to alert the pump operator when the pump exceeds pre-set vibration and temperature limits. This allows the pump operator to make changes to the process or the pump before a catastrophic failure occurs. The condition monitor is also equipped with a single green LED to indicate when it is operational and has sufficient battery life.

Software License Agreement

BY USING THE i-Alert™ CONDITION MONITOR, YOU AGREE TO BE BOUND BY THE TERMS AND CONDITIONS OF THE FOLLOWING LICENSE AGREEMENT. PLEASE READ THIS AGREEMENT CAREFULLY.

ITT Corporation and its subsidiaries, affiliates, either directly, or through its authorized sublicensees ("ITT") grants you a limited, non-exclusive license to use the software embedded in this device ("Software") in binary executable form in the normal operation of the i-Alert™ condition monitor for monitoring the condition of an Goulds Pump Inc. model. Title, ownership rights, and intellectual property rights in and to the Software remain in ITT or its third-party providers. You agree that this license agreement does not need to be signed for it to take effect.

You acknowledge that this Software is the property of ITT and is protected under United States of America copyright laws and international copyright treaties. You further acknowledge that the structure, organization, and code of the Software are valuable trade secrets of ITT and/or its third-party providers and that the Software in source code form remains a valuable trade

secret of ITT. You agree not to decompile, disassemble, modify, reverse assemble, reverse engineer, or reduce to human readable form the Software or any part thereof or create any derivative works based on the Software. You agree not to export or re-export the Software to any country in violation of the export control laws of the United States of America.

Alarm mode

The condition monitor enters alarm mode when either vibration or temperature limits are exceeded over two consecutive readings within a ten minute period. Alarm mode is indicated with two red flashing LEDs within two second intervals.

Temperature and vibration limits

Variable	Limit
Temperature	195°F (91°C)
Vibration	100% increase over the baseline level

Battery life

The i-ALERT Condition Monitor battery is not replaceable. You must replace the entire unit once the battery runs out of power.

The battery life is not covered as part of the standard five-year pump warranty.

This table shows the average condition monitor battery life under normal and alarm-mode operating conditions.

Condition monitor operational state	Battery life
Normal operating and environmental conditions	Three to five years
Alarm mode	One year

Nameplate information

Important information for ordering

Every pump has nameplates that provide information about the pump. The nameplates are located on the casing and the bearing frame.

When you order spare parts, identify this pump information:

- Model
- Size
- Serial number
- Item numbers of the required parts

Refer to the nameplate on the pump casing for most of the information. See Parts List for item numbers.

Nameplate types

Nameplate	Description
Pump casing	Provides information about the hydraulic characteristics of the pump. The formula for the pump size is: Discharge x Suction - Nominal Maximum Impeller Diameter in inches. (Example: 2x3-8)
Bearing frame	Provides information about the lubrication system used.
ATEX	If applicable, your pump unit might have an ATEX nameplate affixed to the pump, the baseplate, or the discharge head. The nameplate provides information about the ATEX specifications of this pump.
IECEx	If applicable, your pump unit might have the following IECEx nameplate affixed to the pump and/or baseplate. The nameplate provides information about the IECEx specifications of this pump.

Nameplate on the pump casing using English units

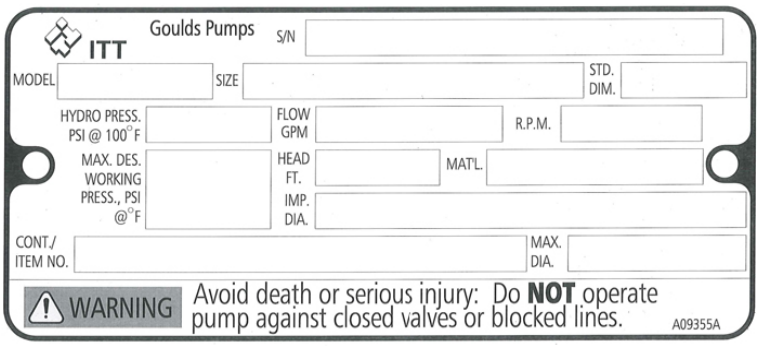

Table 5: Explanation of nameplate on the pump casing

Nameplate field	Explanation
IMPLR. DIA.	Impeller diameter, in inches
MAX. DIA.	Maximum impeller diameter, in inches
GPM	Rated pump flow, in gallons per minute
FT HD	Rated pump head, in feet
RPM	Rated pump speed, revolutions per minute
MOD.	Pump model
SIZE	Size of the pump
STD. NO.	ANSI standard designation
MAT L. CONST.	Material of which the pump is constructed
SER. NO.	Serial number of the pump
MAX DSGN PSI @ 100ºF	Maximum pressure at 100ºF according to the pump design

Nameplate on the pump casing using metric units

Table 6: Explanation of the nameplate on the pump casing

Nameplate field	Explanation
IMPLR. DIA.	Impeller diameter
MAX. DIA.	Maximum impeller diameter
M^3/HR	Rated pump flow, in cubic meters per hour
M HD	Rated pump head, in meters
RPM	Rated pump speed, in revolutions per minute
MOD.	Pump model
SIZE	Size of the pump
STD. NO.	ANSI standard designation
MAT L. CONST	Material of which the pump is constructed
SER. NO.	Serial number of the pump
MAX. DSGN KG/CM^3 @ 20°C	Kilograms per cubic centimeter at 20°C

Nameplate on the bearing frame

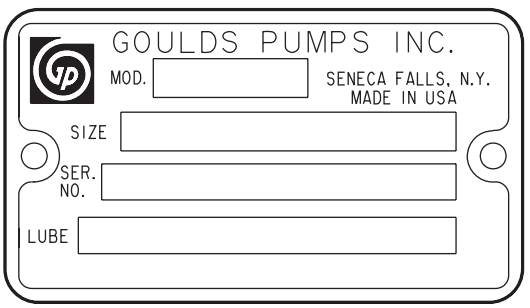

Table 7: Explanation of the nameplate on the bearing frame

Nameplate field	Explanation
BRG. O. B.	Outboard bearing designation
BRG. I. B.	Inboard bearing designation
S/N	Serial number of the pump
LUBE	Lubricant, oil or grease

ATEX nameplate

Nameplate field	Explanation
II	Group 2
2	Category 2
G/D	Pump can be used when gas and dust are present
T4	Temperature class

NOTICE:
Make sure that the code classifications on the pump are compatible with the specific environment in which you plan to install the equipment. If they are not compatible, do not operate the equipment and contact your ITT representative before you proceed.

Installation

Preinstallation

Precautions

WARNING:

- When installing in a potentially explosive environment, make sure that the motor is properly certified.
- You must earth (ground) all electrical equipment. This applies to the pump equipment, the driver, and any monitoring equipment. Test the earth (ground) lead to verify that it is connected correctly.
- Electrical Connections must be made by certified electricians in compliance with all international, national, state, and local rules.

NOTICE:

Supervision by an authorized ITT representative is recommended to ensure proper installation. Failure to do so may result in equipment damage or decreased performance.

Pump location guidelines

WARNING:

Assembled units and their components are heavy. Failure to properly lift and support this equipment can result in serious physical injury and/or equipment damage. Lift equipment only at the specifically identified lifting points. Lifting devices such as eyebolts, slings, and spreaders must be rated, selected, and used for the entire load being lifted.

Guideline	Explanation/comment
Keep the pump as close to the liquid source as practically possible.	This minimizes the friction loss and keeps the suction piping as short as possible.
Make sure that the space around the pump is sufficient.	This facilitates ventilation, inspection, maintenance, and service.
If you require lifting equipment such as a hoist or tackle, make sure that there is enough space above the pump.	This makes it easier to properly use the lifting equipment and safely remove and relocate the components to a safe location.
Protect the unit from weather and water damage due to rain, flooding, and freezing temperatures.	This is applicable if nothing else is specified.
Do not install and operate the equipment in closed systems unless the system is constructed with properly-sized safety devices and control devices.	Acceptable devices: • Pressure relief valves • Compression tanks • Pressure controls • Temperature controls • Flow controls If the system does not include these devices, consult the engineer or architect in charge before you operate the pump.
Take into consideration the occurrence of unwanted noise and vibration.	The best pump location for noise and vibration absorption is on a concrete floor with subsoil underneath.
If the pump location is overhead, undertake special precautions to reduce possible noise transmission.	Consider a consultation with a noise specialist.

Foundation requirements

Requirements

- The foundation must be able to absorb any type of vibration and form a permanent, rigid support for the unit.
- The location and size of the foundation bolt holes must match those shown on the assembly drawing provided with the pump data package.
- The foundation must weigh between two and three times the weight of the pump.

- Provide a flat, substantial concrete foundation in order to prevent strain and distortion when you tighten the foundation bolts.
- Sleeve-type and J-type foundation bolts are most commonly used. Both designs allow movement for the final bolt adjustment.

Sleeve-type bolts

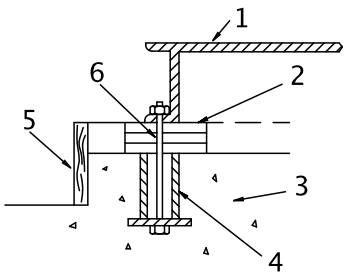

1. Baseplate
2. Shims or wedges
3. Foundation
4. Sleeve
5. Dam
6. Bolt

J-type bolts

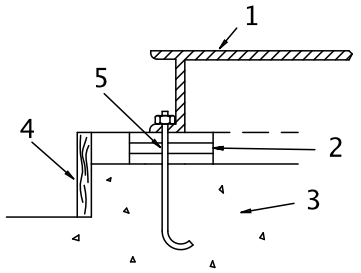

1. Baseplate
2. Shims or wedges
3. Foundation
4. Dam
5. Bolt

Baseplate-mounting procedures

Prepare the baseplate for mounting

1. Remove all the attached equipment from the baseplate.
2. Clean the underside of the baseplate completely.
3. If applicable, coat the underside of the baseplate with an epoxy primer.
   Use an epoxy primer only if you used an epoxy-based grout.
4. Remove the rust-proofing coat from the machined mounting pads using an appropriate solvent.
5. Remove water and debris from the foundation-bolt holes.

Install the baseplate using shims or wedges

Required tools:

- Two sets of shims or wedges for each foundation bolt
- Two machinist's levels

- Baseplate-leveling worksheet

This procedure is applicable to cast iron and fabricated steel baseplates.

1. If you use sleeve-type bolts, fill the bolt sleeves with packing material or rags to prevent grout from entering the bolt holes.
2. Put the sets of wedges or shims on each side of each foundation bolt.
   The sets of wedges should have a height of between 0.75 in. (19 mm) and 1.50 in. (38 mm).

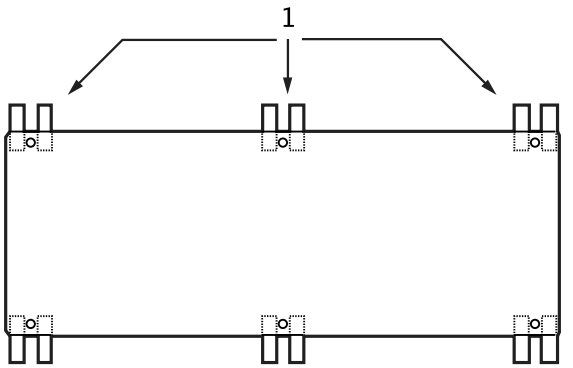

1. Shims or wedges

Figure 10: Top view

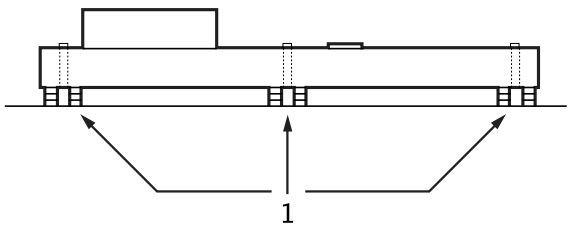

1. Shims or wedges

Figure 11: Side view

3. Lower the baseplate carefully onto the foundation bolts.
4. Put the machinist's levels across the mounting pads of the driver and the mounting pads of the pump.

NOTICE:
Remove all dirt from the mounting pads in order to make sure that you achieve the correct leveling. Failure to do so can result in equipment damage or decreased performance.

5. Level the baseplate both lengthwise and across by adding or removing shims or moving the wedges.
   These are the leveling tolerances:
   - A maximum difference of 0.125 in. (3.2 mm) lengthwise
   - A maximum difference of 0.059 in. (1.5 mm) across

   You can use the baseplate-leveling worksheet when you take the readings.
6. Hand-tighten the nuts for the foundation.

Install the baseplate using jackscrews

Tools required:

- Anti-seize compound
- Jackscrews
- Bar stock
- Two machinist's levels

- Baseplate-leveling worksheet

This procedure is applicable to the feature-fabricated steel baseplate and the advantage base baseplate.

1. Apply an anti-seize compound on the jackscrews.
   The compound makes it easier to remove the screws after you grout.
2. Lower the baseplate carefully onto the foundation bolts and perform these steps:
   a) Cut the plates from the bar stock and chamfer the edges of the plates in order to reduce stress concentrations.
   b) Put the plates between the jackscrews and the foundation surface.
   c) Use the four jackscrews in the corners in order to raise the baseplate above the foundation.
      Make sure that the distance between the baseplate and the foundation surface is between 0.75 in. (19 mm) and 1.50 in. (38 mm).
   d) Make sure that the center jackscrews do not touch the foundation surface yet.

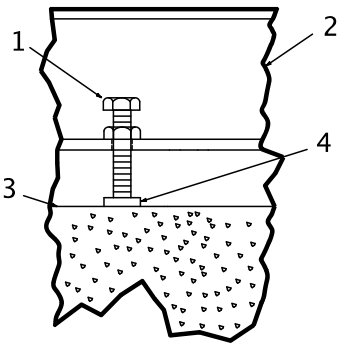

1. Jackscrew
2. Baseplate
3. Foundation
4. Plate

3. Level the driver mounting pads:

NOTICE:
Remove all dirt from the mounting pads in order to make sure that you achieve the correct leveling. Failure to do so can result in equipment damage or decreased performance.

   a) Put one machinist's level lengthwise on one of the two pads.
   b) Put the other machinist's level across the ends of the two pads.

c) Level the pads by adjusting the four jackscrews in the corners.
Make sure that the machinist's level readings are as close to zero as possible, both lengthwise and across.
Use the baseplate-leveling worksheet when you take the readings.

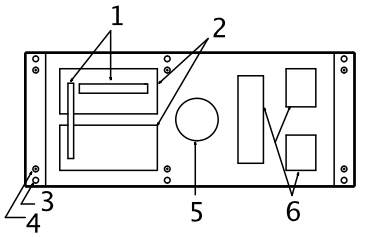

1. Machinist's levels
2. Driver's mounting pads
3. Foundation bolts
4. Jackscrews
5. Grout hole
6. Pump's mounting pads

4. Turn the center jackscrews down so that they rest on their plates on the foundation surface.
5. Level the pump mounting pads:

NOTICE:
Remove all dirt from the mounting pads in order to make sure that you achieve the correct leveling. Failure to do so can result in equipment damage or decreased performance.

a) Put one machinist's level lengthwise on one of the two pads.
b) Put the other level across the center of the two pads.
c) Level the pads by adjusting the four jackscrews in the corners.
Make sure that the machinist's level readings are as close to zero as possible, both lengthwise and across.

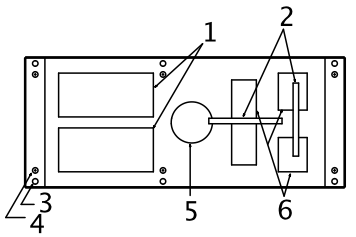

1. Driver's mounting pads
2. Machinist's levels
3. Foundation bolts
4. Jackscrews
5. Grout hole
6. Pump's mounting pads

6. Hand-tighten the nuts for the foundation bolts.
7. Check that the driver's mounting pads are level and adjust the jackscrews and the foundation bolts if necessary.
The correct level measurement is a maximum of 0.002 in./ft (0.0167 mm/m).

Install the baseplate using spring mounting

NOTICE:
The spring-mounted baseplate is designed only to support piping loads from thermal expansion. You must support the suction and discharge piping individually. Failure to do so may result in equipment damage.

The foundation pads are not provided with the baseplate. Make sure that the foundation pads are 316 stainless-steel plates, which have a 16-20 micro-inch surface finish.

Before you start this procedure, make sure that the foundation pads are correctly installed on the foundation/floor (see the manufacturer's instructions).

1. Put the baseplate on a support above the foundation/floor.
   Make sure that there is enough space between the baseplate and the foundation/floor in order to install the spring assemblies.
2. Install the lower part of the spring assembly:
   a) Screw the lower jam nut onto the spring stud.
   b) Screw the lower adjusting nut onto the spring-stud, on top of the jam nut.
   c) Set the lower adjusting nut to the correct height.
      The correct height depends on the required distance between the foundation/floor and the baseplate.
   d) Put a washer, a follower, a spring, and one more follower onto the lower adjusting nut.
3. Install the spring assembly on the baseplate:
   a) Insert the spring assembly into the baseplate's anchorage hole from below.
   b) Put a follower, a spring, another follower, and a washer onto the spring stud.
   c) Fasten the spring assembly with the upper adjusting nut by hand.
4. Thread the upper jam nut onto the spring stud by hand.
5. Repeat steps 2 through 4 for all the spring assemblies.
6. Lower the baseplate so that the spring assemblies fit into the foundation pads.
7. Level the baseplate and make the final height adjustments:
   a) Loosen the upper jam nuts and adjusting nuts.
   b) Adjust the height and level the baseplate by moving the lower adjusting nuts.
   c) When the baseplate is level, tighten the top adjusting nuts so that the top springs are not loose in their followers.
8. Fasten the lower and upper jam nuts on each spring assembly.

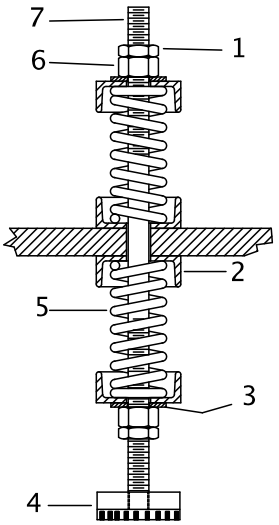

1. Upper jam nut
2. Follower
3. Washer
4. Foundation pads
5. Spring
6. Upper adjusting nut
7. Spring stud

Figure 12: Example of an installed spring assembly

Install the baseplate using stilt mounting

NOTICE:
The stilt-mounted baseplate is not designed to support static piping loads. Make sure to individually support the suction and discharge piping. Failure to do so may result in equipment damage.

1. Put the baseplate on a support above the foundation/floor.
   Make sure that there is enough space between the baseplate and the foundation/floor to install the stilts.
2. Install the lower part of the stilt assembly:
   a) Screw the lower jam nut and adjusting nut onto the stilt.
   b) Set the lower adjusting nut to the correct height.
      The correct height depends on the required distance between the foundation/floor and the baseplate.
   c) Put a washer onto the lower adjusting- nut.
3. Install the stilt assembly on the baseplate:
   a) Insert the stilt assembly into the baseplate's anchorage hole from below.
   b) Put a washer onto the stilt.
   c) Fasten the stilt assembly with the upper adjusting nut by hand.
4. Screw the upper jam nut onto the stilt by hand.
5. Repeat steps 2 through 4 for all the stilt assemblies.
6. Lower the baseplate so that the stilts fit into the foundation cups.
7. Level the baseplate and make the final height adjustments:
   a) Loosen the upper jam nuts and adjusting nuts.
   b) Adjust the height and level the baseplate by moving the lower adjusting nuts.
   c) When the baseplate is level, tighten the top adjusting nuts.
8. Fasten the lower and upper jam nuts on each stilt.

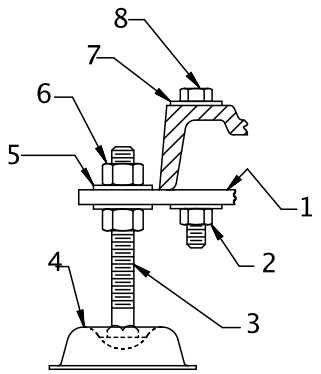

1. Mounting plate
2. Mounting nut
3. Stilt bolt
4. Foundation cups
5. Washer
6. Upper adjustment nut
7. Mounting washer
8. Mounting bolt

Figure 13: Example of an installed stilt assembly

Baseplate-leveling worksheet

Level measurements

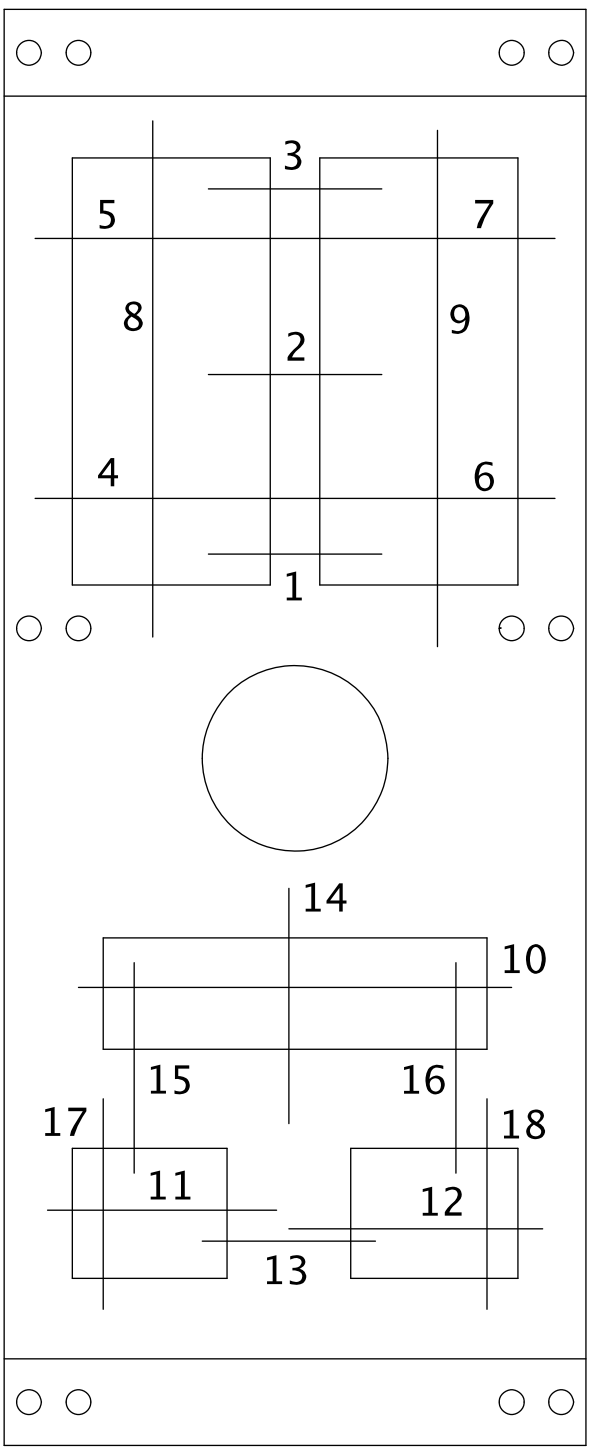

1)_____

2)_____

3)_____

4)_____

5)_____

6)_____

7)_____

8)_____

9)_____

10)_____

11)_____

12)_____

13)_____

14)_____

15)_____

16)_____

17)_____

18)_____

Install the pump, driver, and coupling

1. Mount and fasten the pump on the baseplate. Use applicable bolts.
2. Mount the driver on the baseplate. Use applicable bolts and hand tighten.
3. Install the coupling.
   See the installation instructions from the coupling manufacturer.

Pump-to-driver alignment

Precautions

WARNING:

- Follow shaft alignment procedures in order to prevent catastrophic failure of drive components or unintended contact of rotating parts. Follow the coupling installation and operation procedures from the coupling manufacturer.
- Always disconnect and lock out power to the driver before you perform any installation or maintenance tasks. Failure to disconnect and lock out driver power will result in serious physical injury.
  - Electrical connections must be made by certified electricians in compliance with all international, national, state, and local rules.
  - Refer to driver/coupling/gear manufacturers installation and operation manuals (IOM) for specific instructions and recommendations.

NOTICE:

Proper alignment is the responsibility of the installer and the user of the unit. Check the alignment of frame-mounted units before you operate the unit. Failure to do so can result in equipment damage or decreased performance.

Alignment checks

When to perform alignment checks

You must perform alignment checks under these circumstances:

- The process temperature changes.
- The piping changes.
- The pump has been serviced.

Types of alignment checks

Type of check	When it is used
Initial alignment (cold alignment) check	Prior to operation when the pump and the driver are at ambient temperature.
Final alignment (hot alignment) check	After operation when the pump and the driver are at operating temperature.

Initial alignment (cold alignment) checks

When	Why
Before you grout the baseplate	This ensures that alignment can be accomplished.
After you grout the baseplate	This ensures that no changes have occurred during the grouting process.
After you connect the piping	This ensures that pipe strains have not altered the alignment. If changes have occurred, you must alter the piping to remove pipe strains on the pump flanges.

Final alignment (hot alignment) checks

When	Why
After the first run	This ensures correct alignment when both the pump and the driver are at operating temperature.

When	Why
Periodically	This follows the plant operating procedures.

Permitted indicator values for alignment checks

NOTICE:
The specified permitted reading values are valid only at operating temperature. For cold settings, other values are permitted. You must use the correct tolerances. Failure to do so can result in misalignment and reduced pump reliability.

When dial indicators are used to check the final alignment, the pump and drive unit are correctly aligned when these conditions are true:

- The total indicator runout is a maximum of 0.002 in. (0.05 mm) at operating temperature.
- The tolerance of the indicator is 0.0005 in./in. (0.0127 mm/mm) of indicator separation at operating temperature.

Cold settings for parallel vertical alignment

Introduction

This section shows the recommended preliminary (cold) settings for electric motor-driven pumps based on different temperatures of pumped fluid. Consult driver manufacturers for recommended cold settings for other types of drivers such as steam turbines and engines.

Recommended settings for models 3196, CV 3196, and LF 3196

Pumpage temperature	Recommended setting
50°F (10°C)	0.002 in. (0.05 mm), low
150°F (65°C)	0.001 in. (0.03 mm), high
250°F (120°C)	0.005 in. (0.12 mm), high
350°F (175°C)	0.009 in. (0.23 mm), high
450°F (218°C)	0.013 in. (0.33 mm), high
550°F (228°C)	0.017 in. (0.43 mm), high
650°F (343°C)	0.021 in. (0.53 mm), high
700°F (371°C)	0.023 in. (0.58 mm), high

Alignment measurement guidelines

Guideline	Explanation
Rotate the pump coupling half and the driver coupling half together so that the indicator rods have contact with the same points on the driver coupling half.	This prevents incorrect measurement.
Move or shim only the driver in order to make adjustments.	This prevents strain on the piping installations.
Make sure that the hold-down bolts for the driver feet are tight when you take indicator measurements.	This keeps the driver stationary since movement causes incorrect measurement.
Make sure that the hold-down bolts for the driver feet are loose before you make alignment corrections.	This makes it possible to move the driver when you make alignment corrections.
Check the alignment again after any mechanical adjustments.	This corrects any misalignments that an adjustment may have caused.

Attach the dial indicators for alignment

You must have two dial indicators in order to complete this procedure.

1. Attach two dial indicators on the pump coupling half (X):
   a) Attach one indicator (P) so that the indicator rod comes into contact with the perimeter of the driver coupling half (Y).
   This indicator is used to measure parallel misalignment.

b) Attach the other indicator (A) so that the indicator rod comes into contact with the inner end of the driver coupling half.
This indicator is used to measure angular misalignment.

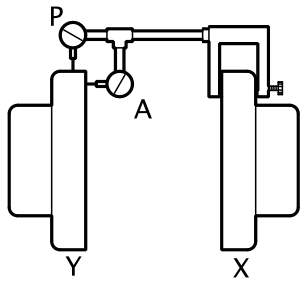

2. Rotate the pump coupling half (X) in order to check that the indicators are in contact with the driver coupling half (Y) but do not bottom out.
3. Adjust the indicators if necessary.

Pump-to-driver alignment instructions

Perform angular alignment for a vertical correction

1. Set the angular alignment indicator to zero at the top-center position (12 o'clock) of the driver coupling half (Y).
2. Rotate the indicator to the bottom-center position (6 o'clock).
3. Record the indicator reading.

When the reading value is...	Then...
Negative	The coupling halves are farther apart at the bottom than at the top. Perform one of these steps: • Add shims in order to raise the feet of the driver at the shaft end. • Remove shims in order to lower the feet of the driver at the other end.
Positive	The coupling halves are closer at the bottom than at the top. Perform one of these steps: • Remove shims in order to lower the feet of the driver at the shaft end. • Add shims in order to raise the feet of the driver at the other end.

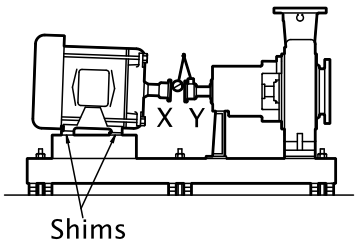

Figure 14: Side view of an incorrect vertical alignment

4. Repeat the previous steps until the permitted reading value is achieved.

Perform angular alignment for a horizontal correction

1. Set the angular alignment indicator (A) to zero on left side of the driver coupling half (Y), 90° from the top-center position (9 o'clock).
2. Rotate the indicator through the top-center position to the right side, 180° from the start position (3 o'clock).
3. Record the indicator reading.

When the reading value is...	Then...
Negative	The coupling halves are farther apart on the right side than the left. Perform one of these steps: • Slide the shaft end of the driver to the left. • Slide the opposite end to the right.
Positive	The coupling halves are closer together on the right side than the left. Perform one of these steps: • Slide the shaft end of the driver to the right. • Slide the opposite end to the left.

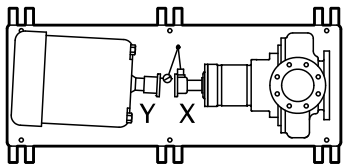

Figure 15: Top view of an incorrect horizontal alignment

4. Repeat the previous steps until the permitted reading value is achieved.

Perform parallel alignment for a vertical correction

Refer to the alignment table in "Permitted indicator values for alignment checks" (see Table of Contents for location of table) for the proper cold alignment value based on the motor temperature rise and the pump operating temperature.

Before you start this procedure, make sure that the dial indicators are correctly set up.

A unit is in parallel alignment when the parallel indicator (P) does not vary by more than 0.002 in. (0.05 mm) as measured at four points 90° apart at the operating temperature.

1. Set the parallel alignment indicator (P) to zero at the top-center position (12 o'clock) of the driver coupling half (Y).
2. Rotate the indicator to the bottom-center position (6 o'clock).
3. Record the indicator reading.

When the reading value is...	Then...
Negative	The pump coupling half (X) is lower than the driver coupling half (Y). Remove shims of a thickness equal to half of the indicator reading value under each driver foot.
Positive	The pump coupling half (X) is higher than the driver coupling half (Y). Add shims of a thickness equal to half of the indicator reading value to each driver foot.

NOTICE:

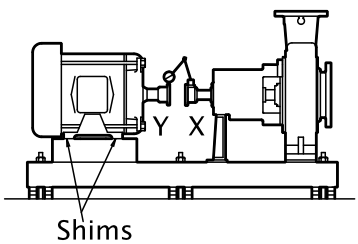

Figure 16: Side view of an incorrect vertical alignment

4. Repeat the previous steps until the permitted reading value is achieved.

NOTICE:
The specified permitted reading values are valid only at operating temperature. For cold settings, other values are permitted. You must use the correct tolerances. Failure to do so can result in misalignment and reduced pump reliability.

Perform parallel alignment for a horizontal correction

A unit is in parallel alignment when the parallel indicator (P) does not vary by more than 0.002 in. (0.05 mm) as measured at four points 90° apart at the operating temperature.

1. Set the parallel alignment indicator (P) to zero on the left side of the driver coupling half (Y), 90° from the top-center position (9 o'clock).
2. Rotate the indicator through the top-center position to the right side, 180° from the start position (3 o'clock).
3. Record the indicator reading.

When the reading value is...	Then...
Negative	The driver coupling half (Y) is to the left of the pump coupling half (X).
Positive	The driver coupling half (Y) is to the right of the pump coupling half (X).

4. Slide the driver carefully in the appropriate direction.

NOTICE: Make sure to slide the driver evenly. Failure to do so can negatively affect horizontal angular correction.

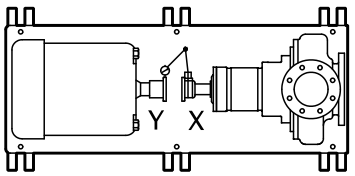

Figure 17: Top view of an incorrect horizontal alignment

5. Repeat the previous steps until the permitted reading value is achieved.

NOTICE:
The specified permitted reading values are valid only at operating temperature. For cold settings, other values are permitted. You must use the correct tolerances. Failure to do so can result in misalignment and reduced pump reliability.

Perform complete alignment for a vertical correction

A unit is in complete alignment when both the angular indicator (A) and the parallel indicator (P) do not vary by more than 0.002 in. (0.05 mm) as measured at four points 90° apart.

1. Set the angular and parallel dial indicators to zero at the top-center position (12 o'clock) of the driver coupling half (Y).
2. Rotate the indicators to the bottom-center position (6 o'clock).
3. Record the indicator readings.
4. Make corrections according to the separate instructions for angular and parallel alignment until you obtain the permitted reading values.

Perform complete alignment for a horizontal correction

A unit is in complete alignment when both the angular indicator (A) and the parallel indicator (P) do not vary by more than 0.002 in. (0.05 mm) as measured at four points 90° apart.

1. Set the angular and parallel dial indicators to zero at the left side of the driver coupling half (Y), 90° from the top-center position (9 o'clock).

2. Rotate the indicators through the top-center position to the right side, 180° from the start position (3 o'clock).
3. Record the indicator readings.
4. Make corrections according to the separate instructions for angular and parallel alignment until you obtain the permitted reading values.

C-face adapter

Intended use

The C-face adapter is a device that attaches the pump to the drive unit to minimize the axial and radial play between the two coupling halves.

Illustration

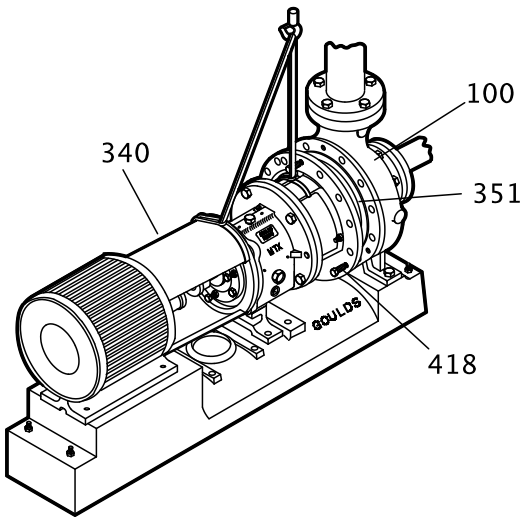

Figure 18: Example of the C-face adapter (340)

Alignment requirements

When you use a C-face adapter, you do not have to align the shaft. The rabbeted fittings of the drive unit to the adapter and the adapter to the bearing frame automatically align the shaft to within the specified limits.

Specified limits

A C-face adapter can attain a nominal alignment of 0.007 in. Total Indicated Runout (T.I.R.). However, because of the stack-up of the machining tolerances of the various parts, the alignment can be as high as 0.015 inches TIR.

If high reliability (with shaft alignments of less than 0.002 in. (0.05mm)) is required for the pump, use a foot-mounted drive unit on a precision-machined baseplate and perform a conventional alignment.

Grout the baseplate

Required equipment:

- Cleaners: Do not use an oil-based cleaner because the grout will not bond to it. See the instructions provided by the grout manufacturer.
- Grout: Non-shrink grout is recommended.

1. Clean all the areas of the baseplate that will come into contact with the grout.
2. Build a dam around the foundation.
3. Thoroughly wet the foundation that will come into contact with the grout.
4. Pour grout through the grout hole into the baseplate up to the level of the dam.

When you pour the grout, remove air bubbles from it by using one of these methods:

- Puddle with a vibrator.
- Pump the grout into place.

5. Allow the grout to set.

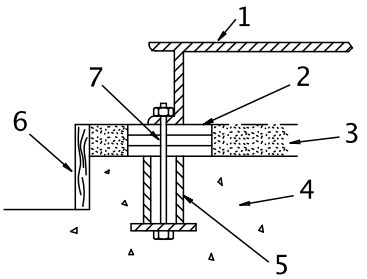

1. Baseplate
2. Shims or wedges
3. Grout
4. Foundation
5. Sleeve
6. Dam
7. Bolt

6. Fill the remainder of the baseplate with grout, and allow the grout to set for at least 48 hours.

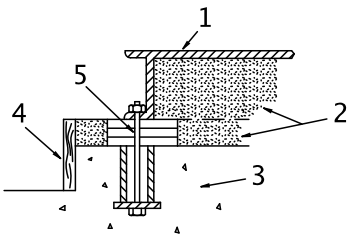

1. Baseplate
2. Grout
3. Foundation
4. Dam
5. Bolt

7. Tighten the foundation bolts.

Piping checklists

General piping checklist

Precautions

CAUTION:

- Never draw piping into place by using force at the flanged connections of the pump. This can impose dangerous strains on the unit and cause misalignment between the pump and driver. Pipe strain adversely affects the operation of the pump, which results in physical injury and damage to the equipment.
- Vary the capacity with the regulating valve in the discharge line. Never throttle the flow from the suction side. This action can result in decreased performance, unexpected heat generation, and equipment damage.

CAUTION:

Piping guidelines

Guidelines for piping are given in the Hydraulic Institute Standards available from the Hydraulic Institute at 9 Sylvan Way, Parsippany, NJ 07054-3802. You must review this document before you install the pump.

Checklist

Check	Explanation/comment	Checked
Check that all piping is supported independently of, and lined up naturally with, the pump flange.	This helps to prevent: • Strain on the pump • Misalignment between the pump and the drive unit • Wear on the pump bearings and the coupling • Wear on the pump bearings, seal, and shafting	
Keep the piping as short as possible.	This helps to minimize friction losses.	
Check that only necessary fittings are used.	This helps to minimize friction losses.	
Do not connect the piping to the pump until: • The grout for the baseplate or sub-base becomes hard. • The hold-down bolts for the pump and the driver are tightened.	—	
Make sure that all the piping joints and fittings are airtight.	This prevents air from entering the piping system or leaks that occur during operation.	
If the pump handles corrosive fluids, make sure that the piping allows you to flush out the liquid before you remove the pump.		
If the pump handles liquids at elevated temperatures, make sure that the expansion loops and joints are properly installed.	This helps to prevent misalignment due to linear expansion of the piping.	

Example: Installation for expansion

Correct	Incorrect
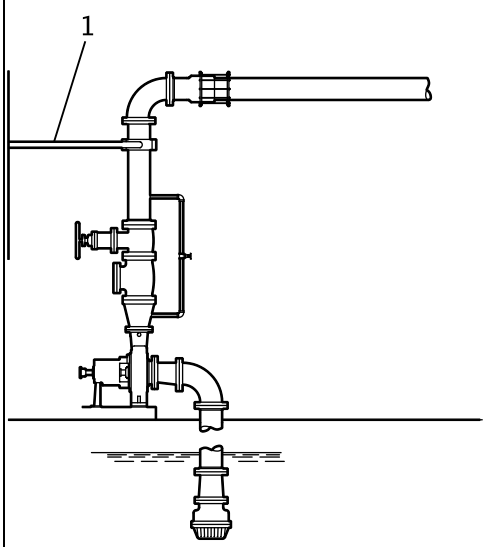 1. Expansion loop/joint	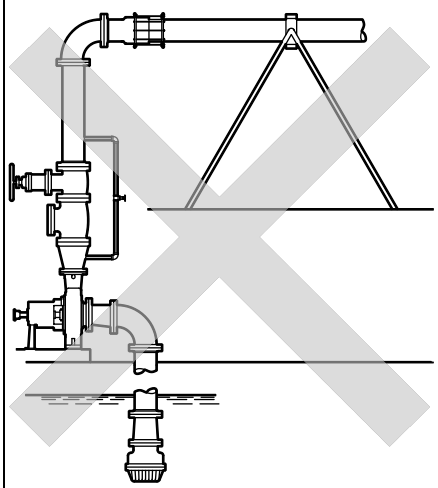

Fastening

WARNING:
- Only use fasteners of the proper size and material.
- Replace all corroded fasteners.
- Make sure that all fasteners are properly tightened and that there are no missing fasteners.

Suction-piping checklist

Performance curve reference

Net positive suction head available ($NPSH_A$) must always exceed NPSH required ($NPSH_R$) as shown on the published performance curve of the pump.

Suction-piping checks

Check	Explanation/comment	Checked
Check that the distance between the inlet flange of the pump and the closest elbow is at least five pipe diameters.	This minimizes the risk of cavitation in the suction inlet of the pump due to turbulence. See the Example sections for illustrations.	
Check that elbows in general do not have sharp bends.	See the Example sections for illustrations.	
Check that the suction piping is one or two sizes larger than the suction inlet of the pump. Install an eccentric reducer between the pump inlet and the suction piping.	The suction piping must never have a smaller diameter than the suction inlet of the pump. See the Example sections for illustrations.	
Check that the eccentric reducer at the suction flange of the pump has the following properties: • Sloping side down • Horizontal side at the top	See the example illustrations.	
When suction strainers or suction bells are used, check that they are at least three times the area of the suction piping.	Suction strainers help to prevent clogging. Mesh holes with a minimum diameter of 1/16 in. (1.6 mm) are recommended.	
If more than one pump operates from the same liquid source, check that separate suction-piping lines are used for each pump.	This recommendation helps you to achieve a higher pump performance.	
If necessary, make sure that the suction piping includes a drain valve and that it is correctly installed.	—	

Liquid source below the pump

Check	Explanation/comment	Checked
Make sure that the suction piping is free from air pockets.	This helps to prevent the occurrence of air and cavitation in the pump inlet.	
Check that the suction piping slopes upwards from the liquid source to the pump inlet.	—	
If the pump is not self-priming, check that a device for priming the pump is installed.	Use a foot valve with a diameter that is at least equivalent to the diameter of the suction piping.	

Liquid source above the pump

Check	Explanation/comment	Checked
Check that an isolation valve is installed in the suction piping at a distance of at least two times the pipe diameter from the suction inlet.	This permits you to close the line during pump inspection and maintenance. Do not use the isolation valve to throttle the pump. Throttling can cause these problems: • Loss of priming • Excessive temperatures • Damage to the pump • Voiding the warranty	
Make sure that the suction piping is free from air pockets.	This helps to prevent the occurrence of air and cavitation in the pump inlet.	
Check that the piping is level or slopes downward from the liquid source.	—	
Make sure that no part of the suction piping extends below the suction flange of the pump.	—	
Make sure that the suction piping is adequately submerged below the surface of the liquid source.	This prevents air from entering the pump through a suction vortex.	

Example: Elbow close to the pump suction inlet

Correct	Incorrect
The correct distance between the inlet flange of the pump and the closest elbow must be at least five pipe diameters. 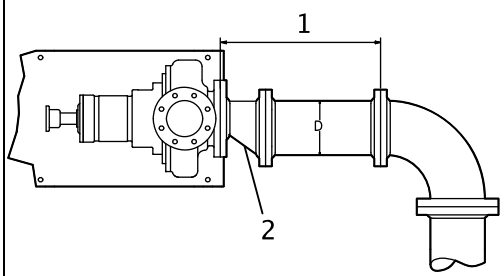 1. Enough distance to prevent cavitation 2. Eccentric reducer with a level top	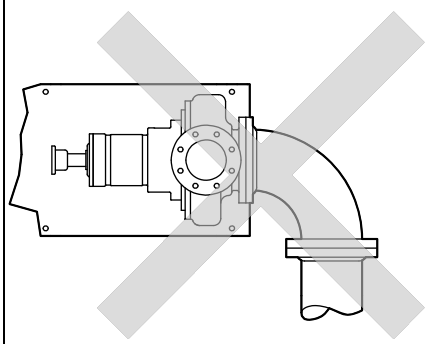

Example: Suction piping equipment

Correct	Incorrect
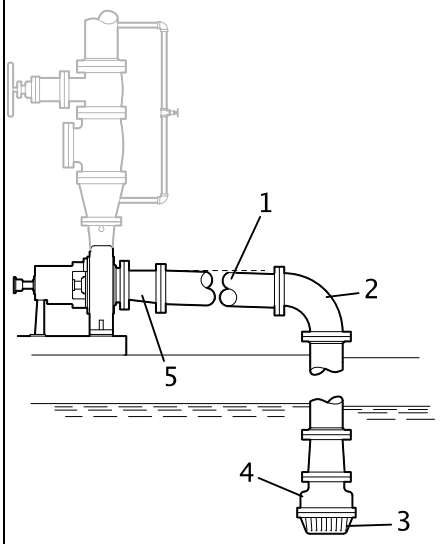	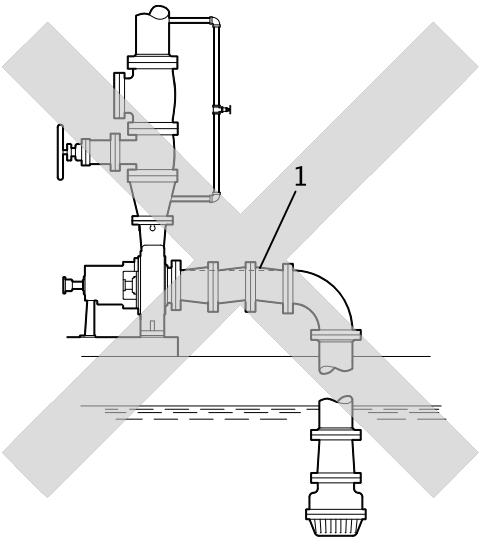
1. Suction pipe sloping upwards from liquid source 2. Long-radius elbow 3. Strainer 4. Foot valve 5. Eccentric reducer with a level top	1. Air pocket, because the eccentric reducer is not used and because the suction piping does not slope gradually upward from the liquid source

Discharge piping checklist

Checklist

Check	Explanation/comment	Checked
Check that an isolation valve is installed in the discharge line.	The isolation valve is required for: • Priming • Regulation of flow • Inspection and maintenance of the pump See Example: Discharge piping equipment for illustrations.	
Check that a check valve is installed in the discharge line, between the isolation valve and the pump discharge outlet.	The location between the isolation valve and the pump allows inspection of the check valve. The check valve prevents damage to the pump and seal due to the back flow through the pump, when the drive unit is shut off. It is also used to restrain the liquid flow. See Example: Discharge piping equipment for illustrations.	
If increasers are used, check that they are installed between the pump and the check valve.	See Example: Discharge piping equipment for illustrations.	
If quick-closing valves are installed in the system, check that cushioning devices are used.	This protects the pump from surges and water hammer.	

Example: Discharge piping equipment

Correct	Incorrect
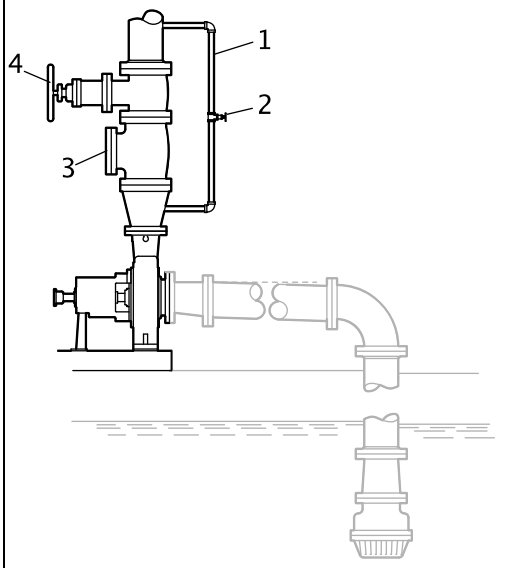	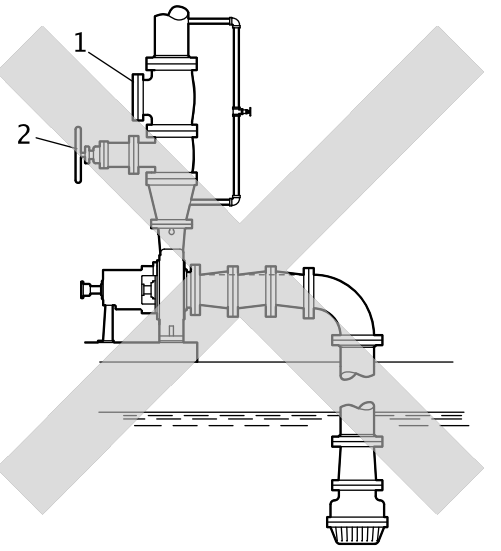
1. Bypass line 2. Shut-off valve 3. Check valve 4. Discharge isolation valve	1. Check valve (incorrect position) 2. The isolation valve should not be positioned between the check valve and the pump.

Commissioning, Startup, Operation, and Shutdown

Preparation for startup

DANGER:
Avoid death or serious injury. Explosion and/or seizure of pump can cause fire and/or burns. Never operate pump past the pressure and temperature limits shown on the nameplate on the pump.

WARNING:

- Failure to follow these precautions before you start the unit will lead to serious personal injury and equipment failure.
- Do not operate the pump below the minimum rated flows or with the suction or discharge valves closed. These conditions can create an explosive hazard due to vaporization of pumped fluid and can quickly lead to pump failure and physical injury.
- Avoid death or serious injury. Leaking fluid can cause fire and/or burns. Operating the pump above maximum rated flow shown on the pump curve leading to an increase in horsepower and vibration along with an increase in NPSHr resulting in mechanical seal and/or shaft failure and/or loss of prime.
- Avoid death or serious injury. Leaking fluid can cause fire and/or burns. Speed of pump must reach 2000 rpm for 2 pole motors and 1000 rpm for 4 pole motors within 10 seconds or an increase in vibration and rotor deflection and decrease in rotor stability leading to mechanical seal and/or shaft failure and/or pump seizure can occur.
- Never operate the pump without the coupling guard correctly installed.
- Always disconnect and lock out power to the driver before you perform any installation or maintenance tasks. Failure to disconnect and lock out driver power will result in serious physical injury.
  - Electrical connections must be made by certified electricians in compliance with all international, national, state, and local rules.
  - Refer to driver/coupling/gear manufacturers installation and operation manuals (IOM) for specific instructions and recommendations.
- Operating the pump in reverse rotation can result in the contact of metal parts, heat generation, and breach of containment.
- Avoid death or serious injury. Explosion and/or seizure of pump can cause fire and/or burns. Assure balance line is installed and either piped to the pump suction or back to the suction vessel to avoid vaporization of pumped fluid.

DANGER:
Avoid death or serious injury. Leaking fluid can cause fire and/or burns. Assure all openings are sealed off prior to filling pump.

Precautions

NOTICE:

- Verify the driver settings before you start any pump.
- Make sure that the warm-up rate does not exceed 2.5°F (1.4°C) per minute.
- Risk of damage to the mechanical seal or shaft sleeve on units supplied with cartridge mechanical seals. Prior to startup, make sure to tighten the set screws in the seal locking ring and remove the centering clips.

You must follow these precautions before you start the pump:

- Flush and clean the system thoroughly to remove dirt or debris in the pipe system in order to prevent premature failure at initial startup.

- Bring variable-speed drivers to the rated speed as quickly as possible.
- Run a new or rebuilt pump at a speed that provides enough flow to flush and cool the close-running surfaces of the stuffing-box bushing.
- If temperatures of the pumped fluid will exceed 200°F (93°C), then warm up the pump prior to operation. Circulate a small amount of fluid through the pump until the casing temperature is within 100°F (38°C) of the fluid temperature. Accomplish this by flowing fluid from pump inlet to discharge drain (optionally, the casing vent can be included in warm-up circuit but not required). Soak for (2) hours at process fluid temperature.

At initial startup, do not adjust the variable-speed drivers or check for speed governor or over-speed trip settings while the variable-speed driver is coupled to the pump. If the settings have not been verified, then uncouple the unit and refer to instructions supplied by the driver manufacturer.

Remove the coupling guard

1. Remove the nut, bolt, and washers from the slotted hole in the center of the coupling guard.
2. Slide the driver half of the coupling guard toward the pump.

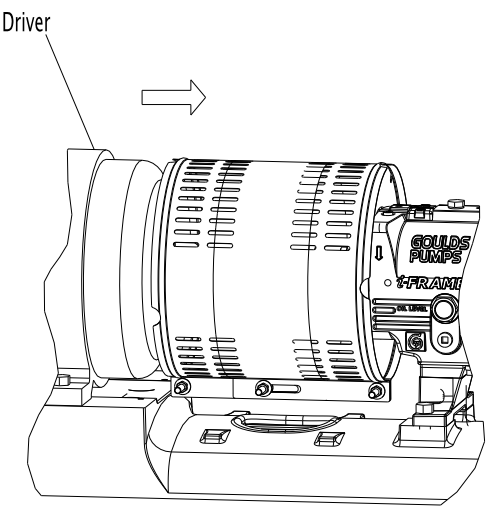

3. Remove the nut, bolt, and washers from the driver half of the coupling guard.

4. Remove the driver-side end plate.

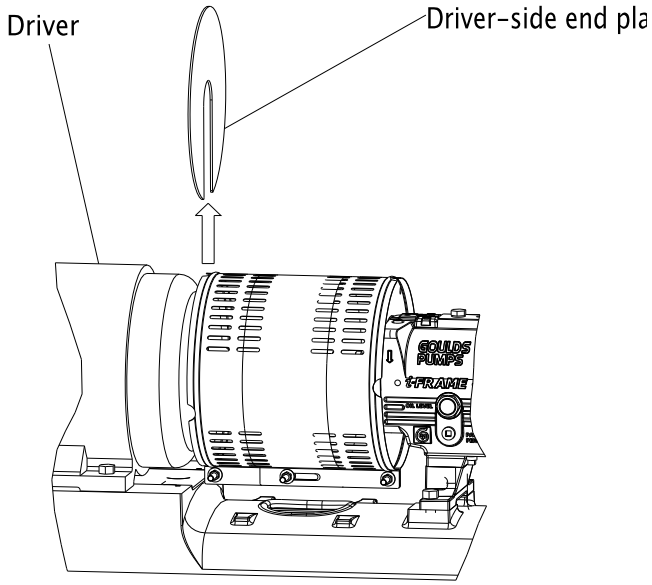

5. Remove the driver half of the coupling guard:
   a) Slightly spread the bottom apart.
   b) Lift upwards.

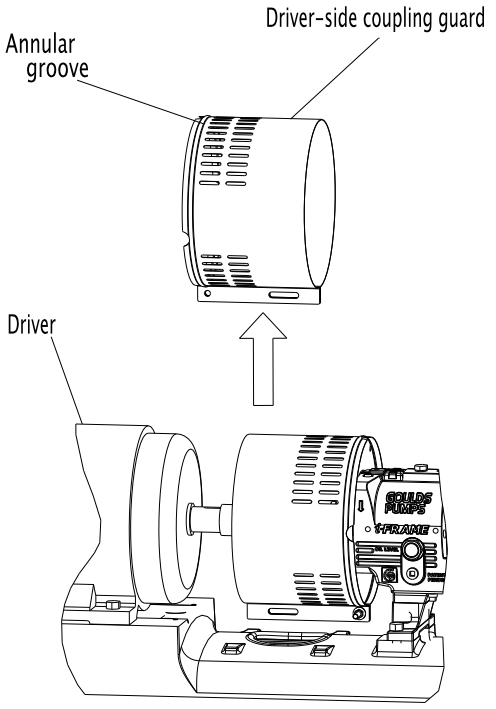

6. Remove the remaining nut, bolt, and washers from the pump half of the coupling guard. It is not necessary to remove the end plate from the pump side of the bearing housing. You can access the bearing-housing tap bolts without removing this end plate if maintenance of internal pump parts is necessary.
7. Remove the pump half of the coupling guard:
   a) Slightly spread the bottom apart.

b) Lift upwards.

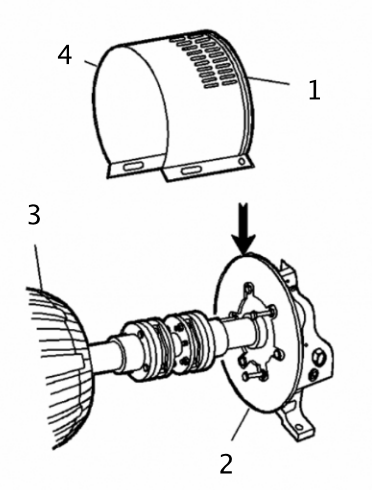

1. Annular groove
2. Pump-side end plate
3. Driver
4. Pump half of the coupling guard

Check the rotation - Frame Mounted

WARNING:

- Operating the pump in reverse rotation can result in the contact of metal parts, heat generation, and breach of containment.
- Always disconnect and lock out power to the driver before you perform any installation or maintenance tasks. Failure to disconnect and lock out driver power will result in serious physical injury.
  - Electrical connections must be made by certified electricians in compliance with all international, national, state, and local rules.
  - Refer to driver/coupling/gear manufacturers installation and operation manuals (IOM) for specific instructions and recommendations.

1. Lock out power to the driver.
2. Make sure that the coupling hubs are fastened securely to the shafts.
3. Make sure that the coupling spacer is removed.
   The pump ships with the coupling spacer removed.
4. Unlock power to the driver.
5. Make sure that everyone is clear, and then jog the driver long enough to determine that the direction of rotation corresponds to the arrow on the bearing housing or close-coupled frame.
6. Lock out power to the driver.

Impeller-clearance check

The impeller-clearance check ensures the following:

- The pump turns freely.
- The pump operates at optimal efficiency for long equipment life and low energy consumption.

Impeller clearances (3196 and HT 3196)

WARNING:
For pumpage temperatures greater than 200°F (93°C), you must increase the cold (ambient) setting according to this table. Doing so prevents the impeller from contacting the casing due to differential expansion from the higher operating temperatures. Failure to do so may result in sparks, unexpected heat generation, and equipment damage.

NOTICE:
Do not set the maximum impeller setting to more than 0.005 in. (0.13 mm) greater than the values in this table. Doing so may result in a significant decrease in performance.

Table 8: Impeller clearances
This pump requires the impeller clearances in the following table.

Service temperature	STi	MTi/LTi	XLT-i/i17
in. (mm)	in. (mm)	in. (mm)	
-20 to 200°F (-29 to 93°C)	0.005 (0.13)	0.008 (0.20)	0.015 (0.38)
Up to 250°F (121°C)	0.006 (0.15)	0.009 (0.22)	0.016 (0.41)
Up to 300°F (149°C)	0.007 (0.18)	0.010 (0.25)	0.017 (0.43)
Up to 350°F (177°C)	0.009 (0.22)	0.012 (0.30)	0.019 (0.48)
Up to 400°F (204°C)	0.010 (0.25)	0.013 (0.33)	0.020 (0.50)
Up to 450°F (232°C)	0.011 (0.28)	0.014 (0.35)	0.021 (0.53)
Up to 500°F (260°C)	0.012 (0.30)	0.015 (0.38)	0.022 (0.56)
Up to 550°F (288°C)	0.013 (0.33)	0.016 (0.41)	0.023 (0.58)
Up to 600°F (316°C)	0.014 (0.36)	0.017 (0.43)	0.024 (0.61)
Up to 650°F (343°C)	0.016 (0.40)	0.019 (0.48)	0.026 (0.66)
Up to 700°F (371°C)	0.017 (0.43)	0.020 (0.50)	0.027 (0.69)

Impeller-clearance setting

Importance of a proper impeller clearance

A proper impeller clearance ensures that the pump runs at high performance.

WARNING:
- The impeller clearance setting procedure must be followed. Improperly setting the clearance or not following any of the proper procedures can result in sparks, unexpected heat generation, and equipment damage.
- If you use a cartridge mechanical seal, you must install the centering clips and loosen the set screws before you set the impeller clearance. Failure to do so could result in sparks, heat generation, and mechanical seal damage.

Impeller clearance methods

You can set the impeller clearance with either of these methods:

- Dial indicator method
- Feeler gauge method

Set the impeller clearance - dial indicator method (all except CV 3196)

WARNING:
Always disconnect and lock out power to the driver before you perform any installation or maintenance tasks. Failure to disconnect and lock out driver power will result in serious physical injury.
- Electrical connections must be made by certified electricians in compliance with all international, national, state, and local rules.
- Refer to driver/coupling/gear manufacturers installation and operation manuals (IOM) for specific instructions and recommendations.

1. Remove the coupling guard.
2. Set the indicator so that the button contacts either the shaft end or the face of the coupling.

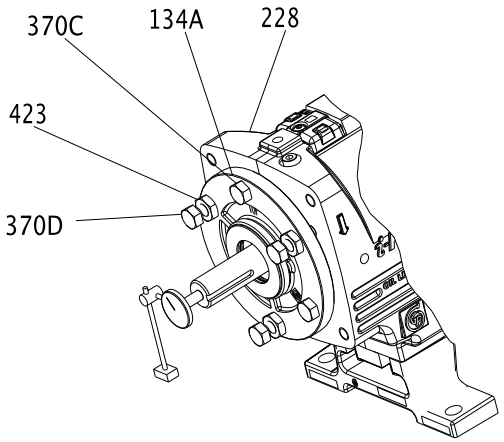

3. Loosen the jam nuts (423) on the jack bolts (370D) , and then back the bolts out about two turns.
4. Tighten the locking bolts evenly (370C), bringing the bearing housing (134A) towards the frame (228) until the impeller contacts the casing.
5. Turn the shaft to ensure that there is contact between the impeller and the casing.
6. Set the indicator to zero and loosen the locking bolt (370C) about one turn.
7. Thread in the jack bolts (370D) until the jack bolts evenly contact the bearing frame.
8. Tighten the jack bolts evenly about one flat at a time, moving the bearing housing (134A) away from the bearing frame until the indicator shows the correct clearance.
   Refer to the impeller clearance table to determine the correct clearance.
9. Tighten the bolts evenly in this order:
   a) Tighten the locking bolts (370C).
   b) Tighten the jack bolts (370D).
   Make sure to keep the indicator reading at the proper setting.
10. Make sure the shaft turns freely.

Set the impeller clearance - feeler gauge method (all except CV 3196)

WARNING:
Always disconnect and lock out power to the driver before you perform any installation or maintenance tasks. Failure to disconnect and lock out driver power will result in serious physical injury.

- Electrical connections must be made by certified electricians in compliance with all international, national, state, and local rules.
- Refer to driver/coupling/gear manufacturers installation and operation manuals (IOM) for specific instructions and recommendations.

1. Lock out the driver power and remove the coupling guard.

2. Loosen the jam nuts (423B) on the jack bolts (371A), and then back the bolts out about two turns.

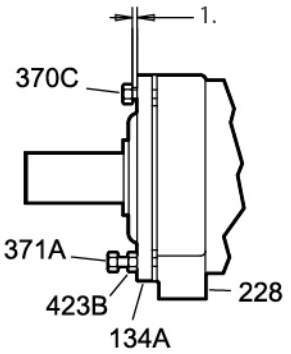

1. See impeller clearance table for distance

3. Evenly tighten the locking bolts (370C), bringing the bearing housing (134A) towards the frame (228) until the impeller contacts the casing.
4. Turn the shaft to ensure that there is contact between the impeller and the casing.
5. Use a feeler gauge to set the gap between the three locking bolts (370C) and the bearing housing (134A) to the correct impeller clearance.
   Refer to the impeller clearance table to determine the correct clearance.
6. Use the three jack bolts (370D) to evenly loosen the bearing housing (134A) until it contacts the locking bolts (370C).
7. Evenly tighten the jam nuts (423B).
8. Make sure the shaft turns freely.

Couple the pump and driver

WARNING:
Always disconnect and lock out power to the driver before you perform any installation or maintenance tasks. Failure to disconnect and lock out driver power will result in serious physical injury.

- Electrical connections must be made by certified electricians in compliance with all international, national, state, and local rules.
- Refer to driver/coupling/gear manufacturers installation and operation manuals (IOM) for specific instructions and recommendations.

Couplings must have proper certification to be used in an ATEX classified environment. Use the instructions from the coupling manufacturer in order to lubricate and install the coupling. Refer to driver/coupling/gear manufacturers IOM for specific instructions and recommendations.

Install the coupling guard

WARNING:

- Never operate a pump without a properly installed coupling guard. Personal injury will occur if you run the pump without a coupling guard.
- Electrical Connections must be made by certified electricians in compliance with all international, national, state, and local rules.
- Refer to driver/coupling/gear manufacturers IOM for specific instructions and recommendations.
- Always disconnect and lock out power to the driver before you perform any installation or maintenance tasks. Failure to disconnect and lock out driver power will result in serious physical injury.
  - Electrical connections must be made by certified electricians in compliance with all international, national, state, and local rules.
  - Refer to driver/coupling/gear manufacturers installation and operation manuals (IOM) for specific instructions and recommendations.
- The coupling used in an Ex-classified environment must be properly certified and must be constructed from a non-sparking material.

Required parts:

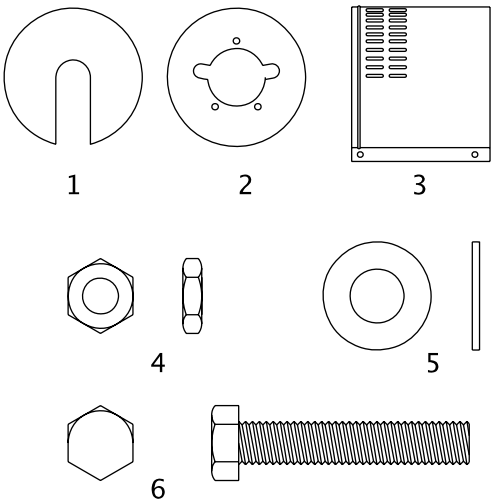

1. End plate, drive end
2. End plate, pump end
3. Guard half, 2 required
4. 3/8-16 nut, 3 required
5. 3/8 in. washer
6. 3/8-16 x 2 in. hex head bolt, 3 required

1. De-energize the motor, place the motor in a locked-out position, and place a caution tag at the starter that indicates the disconnect.
2. Put the pump-side end plate in place.
   If the pump-side end plate is already in place, make any necessary coupling adjustments and then proceed to the next step.

If the pump size is...	Then...
STi, MTi, LTi	Align the pump-side end plate to the bearing frame. You do not need to adjust the impeller.
XLT-i	1. Align the end plate on the pump side to the bearing housing so that you meet these conditions: 1. The large slots on the end plate do not touch the bearing housing tap bolts. 2. The small slots align with the impeller adjusting bolts. 2. Fasten the end plate to the bearing housing using the jam nuts on the impeller adjusting bolts. 3. Check the impeller clearance. Refer to the impeller clearance table for the correct impeller clearance.

If the pump size is...	Then...

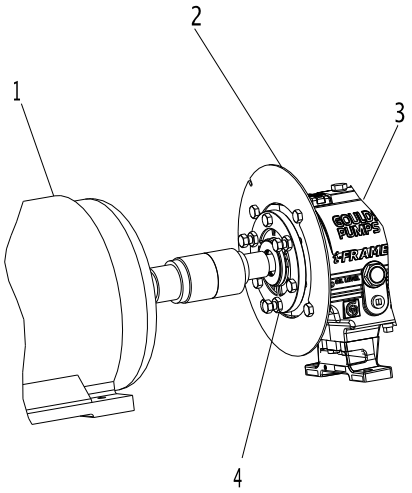

1. Driver
2. Pump end plate
3. Bearing housing
4. Jam nut

3. Put the pump-half of the coupling guard in place:
   a) Slightly spread the bottom apart.
   b) Place the coupling guard half over the pump-side end plate.

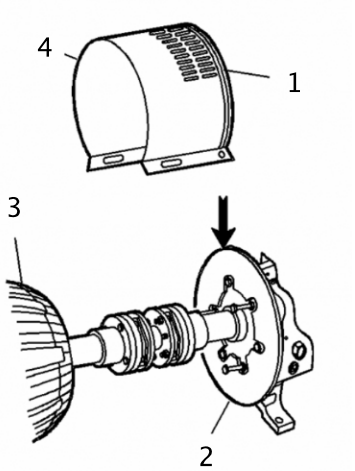

1. Annular groove
2. Pump-side end plate
3. Driver
4. Pump half of the coupling guard

The annular groove in the coupling guard half must fit around the end plate.

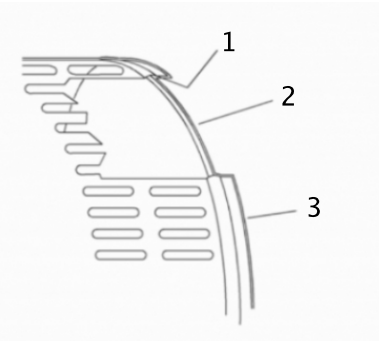

1. Annular groove
2. End plate (pump end)
3. Guard half

4. Use a bolt, a nut, and two washers to secure the coupling guard half to the end plate. Tighten securely.

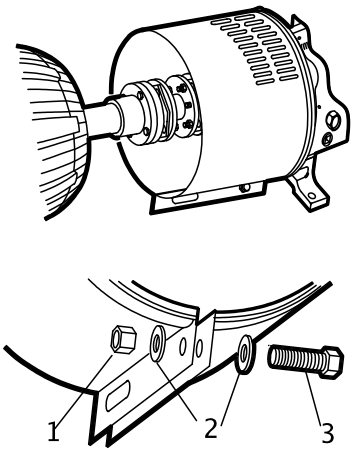

1. Nut
2. Washer
3. Bolt

5. Put the driver half of the coupling guard in place:
   a) Slightly spread the bottom apart.

b) Place the driver half of the coupling guard over the pump half of the coupling guard. The annular groove in the coupling guard half must face the motor.

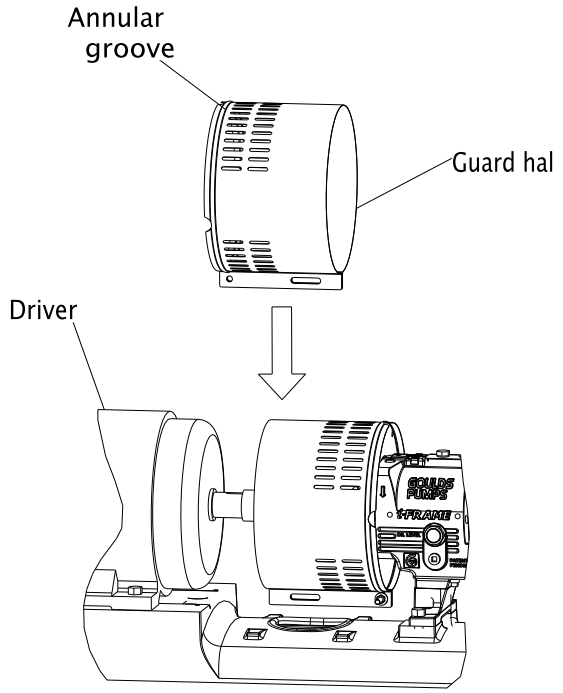

6. Place the driver-side end plate over the motor shaft.

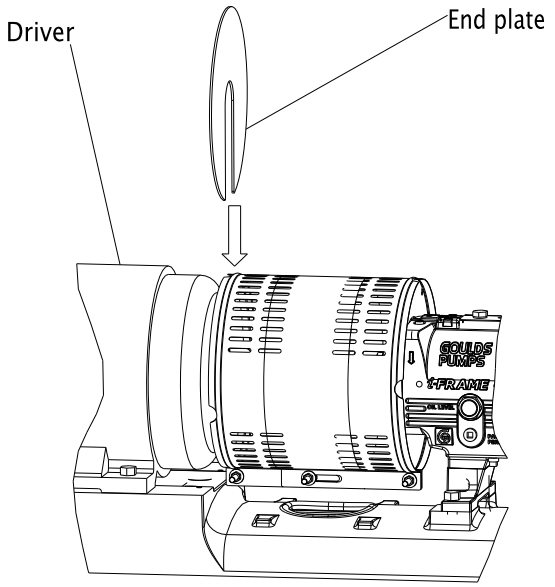

7. Place the driver-side end plate in the annular groove of the driver-half of the coupling guard.
8. Use a bolt, a nut, and two washers to secure the coupling guard half to the end plate. Hand-tighten only.
   The hole is located on the driver-side of the coupling guard half.

9. Slide the driver-half of the coupling guard towards the motor so that the coupling guard completely covers the shafts and coupling.

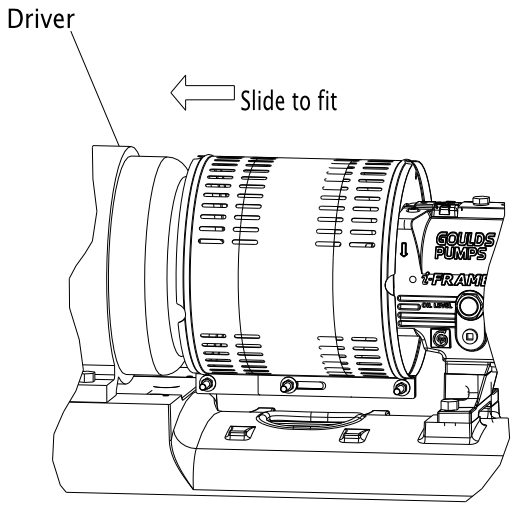

10. Use a nut, a bolt, and two washers to secure the coupling guard halves together.
11. Tighten all nuts on the guard assembly.

WARNING:
Never operate the pump without the coupling guard correctly installed.

Bearing lubrication

WARNING:
Make sure to properly lubricate the bearings. Failure to do so can result in excess heat generation, sparks, and premature failure.

NOTICE: Be certain to check the greasing on a pump that has been out of service for a long period of time and re-grease if necessary.

Pumps are shipped without oil. You must lubricate oil-lubricated bearings at the job site.

Grease-lubricated bearings are lubricated at the factory.

The bearing manufacturer fills greased-for-life bearings with grease and seals them at the factory. You do not need to lubricate or seal these bearings.

Oil volumes

Oil volume requirements

This table shows the required amount of oil for oil-lubricated bearings.

Frame	Qts.	Oz.	ml
STi	0.5	16	400
MTi	1.5	47	1400
LTi	1.5	48	1400
XLT-i and i17	3	96	3000

Lubricating-oil requirements

Oil requirements based on temperature

For the majority of operating conditions, bearing temperatures run between 120°F (49°C) and 180°F (82°C), and you can use an oil of ISO viscosity grade 68 at 100°F (38°C). If temperatures exceed 180°F (82°C), refer to the table for temperature requirements.

Temperature	Oil requirement
Bearing temperatures exceed 180°F (82°C)	Use ISO viscosity grade 100 with bearing-frame cooling or finned-tube oil cooler. The finned-tube oil cooler is standard with the HT 3196 model and optional for all other models.
Pumped-fluid temperatures exceed 350°F (177°C)	Use synthetic lubrication.

Acceptable oil for lubricating bearings

Acceptable lubricants

Examples of acceptable high quality turbine oils with rust and oxidation inhibitors.

Brand	Lubricant type
Chevron	GTS Oil 68
Exxon	Teresstic EP 68
Mobil	DTE 26 300 SSU @ 100°F (38°C)
Philips	Mangus Oil 315
Shell	Tellus Oil 68
Sunoco	Sunvis 968
Royal Purple	SYNFILM ISO VG 68 Synthetic Lube

Examples of acceptable synthetic lubricants.

Brand	Lubricant type
Castrol	Hyspin R&O 220
Chevron	GST 220
Exxon	Teresstic 220
Mobil	DTE Oil BB SHC 630
Shell	Marlina 220 Tellus 220
Sunoco	Sunvis 9220
Texaco	Regal R&O 220 Rando HD 220
Royal Purple	Synfilm GT 220 Synergy 220

Lubricate the bearings with oil

Use a high-quality turbine oil with rust and oxidation inhibitors.

1. Remove the fill plug.
2. Fill the bearing frame with oil through the filler connection, which is located on top of the bearing frame.

Fill the bearing frame with oil until the oil level reaches the middle of the sight glass (319).

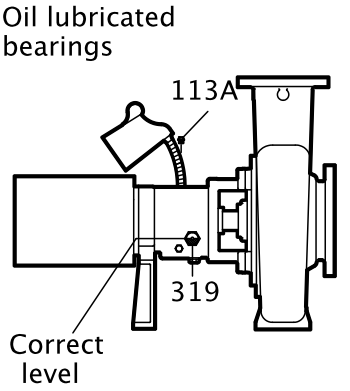

3. Replace the fill plug.

Lubricate the bearings with pure oil mist

Oil mist is an optional feature for this pump.
To lubricate bearings with pure oil mist, follow the instructions provided by the manufacturer of the oil-mist generator.
The inlet connections are on the top of the bearing frame.

Greased-for-life bearing lubrication

The bearing manufacturer fills greased-for-life bearings with grease and seals them at the factory. You do not need to lubricate or seal these bearings. Refer to the Maintenance chapter for re-greasing and maintenance procedures for these bearings.

Shaft-sealing options

In most cases, the manufacturer seals the shaft before shipping the pump. If your pump does not have a sealed shaft, see the Shaft-seal maintenance section in the Maintenance chapter.
This model uses these types of shaft seals:

- Cartridge mechanical seal
- Conventional inside-component mechanical seal
- Conventional outside-component mechanical seal
- Dynamic seal
- Packed-stuffing-box option

Mechanical seal options

Pumps are usually shipped with mechanical seals installed. If they are not, then refer to the mechanical seal manufacturer's installation instructions.
These are the mechanical seal options for this pump:

- Cartridge mechanical seal
- Conventional inside component mechanical seal
- Conventional outside component mechanical seal

Connection of sealing liquid for mechanical seals

Seal lubrication is required

Seal faces must have liquid film between them for proper lubrication. Locate the taps using the illustrations shipped with the seal.

Seal flushing methods

You can use these methods in order to flush or cool the seal:

Method	Description
Product flush	Run the piping so that the pump pushes the pumped fluid from the casing and injects it into the seal gland. If necessary, an external heat exchanger cools the pumped fluid before it enters the seal gland.
External flush	Run the piping so that the pump injects a clean, cool, compatible liquid directly into the seal gland. The pressure of the flushing liquid must be 5 to 15 psi (0.35 to 1.01 kg/cm^2) greater than the seal chamber pressure. The injection rate must be 0.5 to 2 gpm (2 to 8 lpm).
Other	You can use other methods that employ multiple gland or seal chamber connections. Refer to the mechanical seal reference drawing and piping diagrams.

Packed stuffing box option

WARNING:
Packed stuffing boxes are not allowed in an ATEX-classified environment.

The factory does not install the packing, lantern ring, or split gland.

These parts are included with the pump in the box of fittings. Before you start the pump, you must install the packing, lantern ring, and split gland according to the Packed stuffing box maintenance section in the Maintenance chapter.

Connection of sealing liquid for a packed stuffing box

WARNING:
Packed stuffing boxes are not allowed in an ATEX-classified environment.

NOTICE:
Make sure to lubricate the packing. Failure to do so may result in shortening the life of the packing and the pump.

You must use an external sealing liquid under these conditions:

- The pumped fluid includes abrasive particles.
- The stuffing-box pressure is below atmospheric pressure when the pump is running with a suction lift or when the suction source is in a vacuum. Under these conditions, packing is not cooled and lubricated and air is drawn into pump.

Conditions for application of an external liquid

Condition	Action
The stuffing box pressure is above atmospheric pressure and the pumped fluid is clean.	Normal gland leaks of 40 to 60 drops per minute is usually sufficient to lubricate and cool the packing. You do not need sealing liquid.
The stuffing box pressure is below atmospheric pressure or the pumped fluid is not clean.	An outside source of clean compatible liquid is required.
An outside source of clean compatible liquid is required.	You must connect the piping to the lantern ring connection with a 40 to 60 drops-per-minute leak rate. The pressure must be 15 psi (1.01 kg/cm^2) above the stuffing box pressure.

Dynamic-seal option

WARNING:
Dynamic seals are not allowed in an ATEX-classified environment.

The dynamic seal consists of two parts:

- Repeller seal
- Secondary seal (one of the following):
  - Graphite packing
  - Elastomenic face seal

Table 9: Dynamic seal part function

Part	Function
Repeller seal	A repeller seal prevents liquid from entering the stuffing box during operation. The repeller normally does not require a flush. However, for services that allow a build-up of solids on the repeller, you must install a flush connection. If a danger of freezing exists, then you must install a drain connection to drain the repeller chamber.

Secondary seal (graphite packing)	This secondary seal prevents leaks during pump shutdown and is comprised of the following:
	• Graphite packing – Graphite packing provides adequate life running dry but can provide longer performance if lubricated with clean water or grease.
	  • If you lubricate with clean water, then the repeller reduces both the quantity and pressure of seal water that is necessary. If the suction head is less than the repeller capability, then the stuffing box pressure is the same as the atmospheric pressure. Water pressure for the seal must be high enough to overcome static head when the pump is not operating to keep pumped fluid out of the packing. There must be enough flow to cool the packing.
	  • If you lubricate with grease, then you must use spring-loaded grease lubricators to maintain a constant supply.
	• Elastomeric face seal – The elastomeric face seal consists of an elastomer rotary fitted to the shaft and a ceramic stationary seat fitted in the gland. To set an elastomeric face seal, refer to Set an elastomeric face seal. This seal is designed to run dry, so no flush is necessary.

Set an elastomeric face seal

This procedure ensures that the elastomeric seal attains proper contact. No other adjustments are necessary.

1. Remove the gland nuts.
2. Slide the gland back on the sleeve.
3. Pull the rotary back on the sleeve until the rotary is about 1 in. (25 mm) beyond the stuffing box face.
4. Push the gland back onto the studs, pushing the rotary back along the sleeve.
5. Tighten the gland nuts.

Pump priming

Prime the pump with the suction supply above the pump

1. Slowly open the suction isolation valve.
2. Open the air vents on the suction and discharge piping until the pumped fluid flows out.
3. Close the air vents.

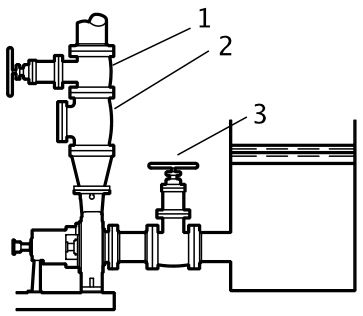

1. Discharge isolation valve
2. Check valve
3. Suction isolation valve

Prime the pump with the suction supply below the pump

Use a foot valve and an outside source of liquid in order to prime the pump. The liquid can come from one of these sources:

- A priming pump
- A pressurized discharge line
- Another outside supply

1. Close the discharge isolation valve.
2. Open the air vent valves in the casing.
3. Open the valve in the outside supply line until only liquid escapes from the vent valves.
4. Close the vent valves.
5. Close the outside supply line.

This illustration is an example of priming the pump with a foot valve and an outside supply:

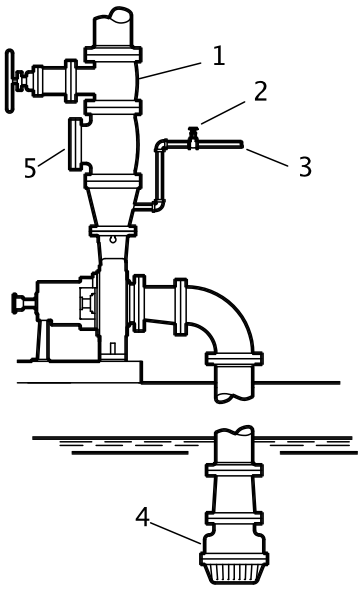

1. Discharge isolation valve
2. Shutoff valve
3. From outside supply
4. Foot valve
5. Check valve

This illustration is an example of priming the pump with a foot valve using a bypass around the check valve:

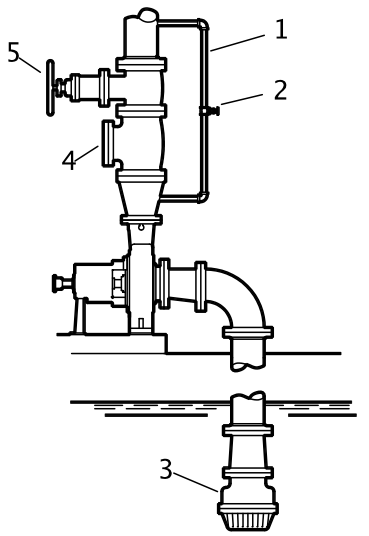

1. By-pass line
2. Shutoff valve
3. Foot valve
4. Check valve
5. Discharge isolation valve

Other methods of priming the pump

You can also use these methods in order to prime the pump:

- Prime by ejector
- Prime by automatic priming pump

Start the pump

WARNING: Immediately observe the pressure gauges. If discharge pressure is not quickly attained, stop the driver immediately, reprime, and attempt to restart the pump.

CAUTION:

- Immediately observe the pressure gauges. If discharge pressure is not quickly attained, stop the driver, reprime, and attempt to restart the pump.
- Observe the pump for vibration levels, bearing temperature, and excessive noise. If normal levels are exceeded, shut down the pump and resolve the issue.
- On pure or purge-oil mist-lubricated units, remove the viewing port plugs to verify that oil mist flowing properly. Replace the plugs.
- On frame mounted units, ensure that the oil level is correct prior to starting pump. Close coupled pumps do not have oil lubricated bearings.
- Ensure all flush and cooling systems are operating correctly prior to starting pump.

Before you start the pump, you must perform these tasks:

- Open the suction valve.
- Open any recirculation or cooling lines.

1. Fully close or partially open the discharge valve, depending on system conditions.
2. Start the driver.
3. Slowly open the discharge valve until the pump reaches the desired flow.
4. Immediately check the pressure gauge to ensure that the pump quickly reaches the correct discharge pressure.
5. If the pump fails to reach the correct pressure, perform these steps:
   a) Stop the driver.
   b) Prime the pump again.
   c) Restart the driver.
6. Monitor the pump while it is operating:
   a) Check the pump for bearing temperature, excessive vibration, and noise.
   b) If the pump exceeds normal levels, then shut down the pump immediately and correct the problem.
   A pump can exceed normal levels for several reasons. See Troubleshooting for information about possible solutions to this problem.
7. Repeat steps 5 and 6 until the pump runs properly.

Activate the i-ALERT Condition Monitor

WARNING:
Never heat the condition monitor to temperatures in excess of 300°F (149°C). Heating to these temperatures could result in death or serious injury.

CAUTION:
Always wear protective gloves. The pump and condition monitor can be hot.

By using the i-Alert™ Condition monitor, you agree to be bound by the Terms and Conditions of the *Software License Agreement* (page 18)

The condition monitor is ready for activation when the pump is running and has reached a steady flow, pressure, and temperature. This process only takes a few minutes.

1. Place a small magnet on the condition monitor over the ITT logo and then remove it, as this example shows.

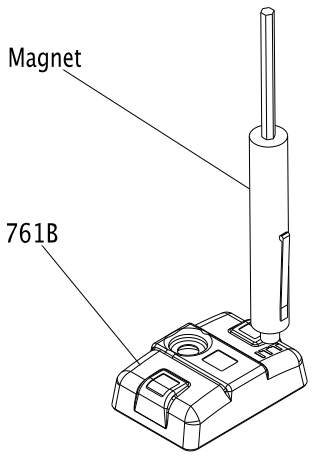

When the condition monitor is activated it:

1. Displays a series of red LEDs followed by a solid green LED.
2. Collects eight samples that are spaced one second apart.
3. Averages these readings to establish the baseline vibration level.
4. Flashes a green LED after approximately twelve seconds.

For the first ten minutes, the green LED flashes every second for five consecutive flashes and then pauses to take a vibration reading. More frequent measurements (every six seconds) are taken in this startup period so that an alarm can be immediately detected.

i-ALERT™ Condition Monitor routine operation

Measurement interval

This table shows the measurement intervals for the condition monitor during normal operation and when the monitor is in alarm mode.

Mode	Measurement interval
Normal operating mode	Five minutes
Alarm mode	Two minutes

When the condition monitor measures a reading beyond the specified temperature and vibration limits, the appropriate red LED flashes. After the process or pump condition that causes the alarm is corrected, the condition monitor returns to normal mode after one normal-level measurement.

Alarm mode

When the condition monitor is in alarm mode, you should investigate the cause of the condition and make necessary corrections in a timely manner.

Magnetic device considerations

Be careful when you use magnetic devices in close proximity of the condition monitor, such as magnetic vibration-monitoring probes or dial indicators. These magnetic devices can accidentally activate or deactivate the condition monitor resulting in improper alarm levels or loss of monitoring.

Pump operation precautions

General considerations

CAUTION:

- Vary the capacity with the regulating valve in the discharge line. Never throttle the flow from the suction side since this can result in decreased performance, unexpected heat generation, and equipment damage.
  Do not overload the driver. Driver overload can result in unexpected heat generation and equipment damage. The driver can overload in these circumstances:
  - The specific gravity of the pumped fluid is greater than expected.
  - The pumped fluid exceeds the rated flow rate.
- Do not operate pump past the maximum flow. For maximum flow refer to the pump performance curve.
- Do not overload the driver. Driver overload can result in unexpected heat generation and equipment damage. The driver can overload in these circumstances:
  - The specific gravity of the pumped fluid is greater than expected.
  - The pumped fluid exceeds the rated flow rate.
- Do not operate pump below hydraulic or thermal minimum flow. For hydraulic minimum flows refer to technical manual and pump performance curve. To calculate thermal minimum flow, refer to HI Centrifugal Pumps for Design and Application ANSI/HI 1.3-2000.
- Make sure to operate the pump at or near the rated conditions. Failure to do so can result in pump damage from cavitation or recirculation.

Operation at reduced capacity

WARNING:
Never operate any pumping system with a blocked suction and discharge. Operation, even for a brief period under these conditions, can cause confined pumped fluid to overheat, which results in a violent explosion. You must take all necessary measures to avoid this condition. If pump becomes plugged shut down and unplug prior to restarting pump.

CAUTION:

- The pump and system must be free of foreign objects. If pump becomes plugged, shut down and unplug prior to restarting pump.
- Avoid excessive vibration levels. Excessive vibration levels can damage the bearings, stuffing box or seal chamber, and the mechanical seal, which can result in decreased performance.
- Avoid increased radial load. Failure to do so can cause stress on the shaft and bearings.
- Avoid heat build-up. Failure to do so can cause rotating parts to score or seize.
- Avoid cavitation. Failure to do so can cause damage to the internal surfaces of the pump.

Operation under freezing conditions

NOTICE:
Do not expose an idle pump to freezing conditions. Drain all liquid that is inside the pump and the cooling coils. Failure to do so can cause liquid to freeze and damage the pump.

Shut down the pump

WARNING:
The pump can handle hazardous and toxic fluids. Identify the contents of the pump and observe proper decontamination procedures in order to eliminate the possible exposure to any hazardous or toxic fluids. Wear the proper personal protective equipment. Potential hazards include, but are not limited to, high temperature, flammable, acidic, caustic, explosive, and other risks. You must handle and dispose of pumped fluid in compliance with the applicable environmental regulations.

1. Slowly close the discharge valve.
2. Shut down and lock the driver to prevent accidental rotation.

Deactivate the i-ALERT™ Condition Monitor

NOTICE:
Always deactivate the condition monitor when the pump is going to be shut down for an extended period of time. Failure to do so will result in reduced battery life.

1. Touch and hold a small magnet to the condition monitor over the ITT logo until the red LEDs blink three times.
   This should take 10-15 seconds if the condition monitor is in normal operating mode and approximately five seconds if the condition monitor is in alarm mode.
2. Remove the magnet.

If the deactivation is successful, solid red LEDs will be displayed.

Reset the i-ALERT™ Condition Monitor

NOTICE:
Always reset the condition monitor when the pump is started after maintenance, system change, or down-time. Failure to do so may result in false baseline levels that could cause the condition monitor to alert in error.

1. Touch a magnet to the condition monitor over the ITT logo to turn the power on.The condition monitor begins to establish a new baseline vibration level.

Make the final alignment of the pump and driver

WARNING:
- Always disconnect and lock out power to the driver before you perform any installation or maintenance tasks. Failure to disconnect and lock out driver power will result in serious physical injury.
  - Electrical connections must be made by certified electricians in compliance with all international, national, state, and local rules.
  - Refer to driver/coupling/gear manufacturers installation and operation manuals (IOM) for specific instructions and recommendations.
- Follow shaft alignment procedures in order to prevent catastrophic failure of drive components or unintended contact of rotating parts. Follow the coupling installation and operation procedures from the coupling manufacturer.

You must check the final alignment after the pump and driver are at operating temperature. For initial alignment instructions, see the Installation chapter.

1. Run the unit under actual operating conditions for enough time to bring the pump, driver, and associated system to operating temperature.
2. Shut down the pump and the driver.
3. Remove the coupling guard.
   See Remove the coupling guard in the Maintenance chapter.
4. Check the alignment while the unit is still hot.
   See Pump-to-driver alignment in the Installation chapter.
5. Reinstall the coupling guard.
6. Restart the pump and driver.

Maintenance

Maintenance schedule

Maintenance inspections

A maintenance schedule includes these types of inspections:

- Routine maintenance
- Routine inspections
- Three-month inspections
- Annual inspections

Shorten the inspection intervals appropriately if the pumped fluid is abrasive or corrosive or if the environment is classified as potentially explosive.

Routine maintenance

Perform these tasks whenever you perform routine maintenance:

- Lubricate the bearings.
- Inspect the seal.

Routine inspections

Perform these tasks whenever you check the pump during routine inspections:

- Check the level and condition of the oil through the sight glass on the bearing frame.
- Check for unusual noise, vibration, and bearing temperatures.
- Check the pump and piping for leaks.
- Analyze the vibration.
- Inspect the discharge pressure.
- Inspect the temperature.
- Check the seal chamber and stuffing box for leaks.
  - Ensure that there are no leaks from the mechanical seal.
  - Adjust or replace the packing in the stuffing box if you notice excessive leaking.

Three-month inspections

Perform these tasks every three months:

- Check that the foundation and the hold-down bolts are tight.
- Check the packing if the pump has been left idle, and replace as required.
- Change the oil every three months (2000 operating hours) at minimum.
  - Change the oil more often if there are adverse atmospheric or other conditions that might contaminate or break down the oil.
- Check the shaft alignment, and realign as required.

Annual inspections

Perform these inspections one time each year:

- Check the pump capacity.
- Check the pump pressure.
- Check the pump power.

If the pump performance does not satisfy your process requirements, and the process requirements have not changed, then perform these steps:

1. Disassemble the pump.
2. Inspect it.

3. Replace worn parts.

Bearing maintenance

These bearing lubrication sections list different temperatures of the pumped fluid. If the pump is ATEX-certified and the temperature of the pumped fluid exceeds the permitted temperature values, then consult your ITT representative.

Bearing lubrication schedule

Type of bearing	First lubrication	Lubrication intervals
Oil-lubricated bearings	Add oil before you install and start the pump. Change the oil after 200 hours for new bearings.	After the first 200 hours, change the oil every 2000 operating hours or every three months.
Grease-lubricated bearings	Grease-lubricated bearings are initially lubricated at the factory.	Regrease bearings every 2000 operating hours or every three months.

Lubricating-oil requirements

Oil requirements based on temperature

For the majority of operating conditions, bearing temperatures run between 120°F (49°C) and 180°F (82°C), and you can use an oil of ISO viscosity grade 68 at 100°F (38°C). If temperatures exceed 180°F (82°C), refer to the table for temperature requirements.

Temperature	Oil requirement
Bearing temperatures exceed 180°F (82°C)	Use ISO viscosity grade 100 with bearing-frame cooling or finned-tube oil cooler. The finned-tube oil cooler is standard with the HT 3196 model and optional for all other models.
Pumped-fluid temperatures exceed 350°F (177°C)	Use synthetic lubrication.

Oil volumes

Oil volume requirements

This table shows the required amount of oil for oil-lubricated bearings.

Frame	Qts.	Oz.	ml
STi	0.5	16	400
MTi	1.5	47	1400
LTi	1.5	48	1400
XLT-i and i17	3	96	3000

Acceptable oil for lubricating bearings

Acceptable lubricants

Examples of acceptable high quality turbine oils with rust and oxidation inhibitors.

Brand	Lubricant type
Chevron	GTS Oil 68
Exxon	Teresstic EP 68
Mobil	DTE 26 300 SSU @ 100°F (38°C)
Philips	Mangus Oil 315
Shell	Tellus Oil 68
Sunoco	Sunvis 968
Royal Purple	SYNFILM ISO VG 68 Synthetic Lube

Examples of acceptable synthetic lubricants.

Brand	Lubricant type
Castrol	Hyspin R&O 220
Chevron	GST 220
Exxon	Teresstic 220

Brand	Lubricant type
Mobil	DTE Oil BB SHC 630
Shell	Marlina 220 Tellus 220
Sunoco	Sunvis 9220
Texaco	Regal R&O 220 Rando HD 220
Royal Purple	Synfilm GT 220 Synergy 220

Regrease the grease-lubricated bearings

NOTICE:
Make sure that the grease container, the greasing device, and the fittings are clean. Failure to do this can result in impurities entering the bearing housing when you regrease the bearings.

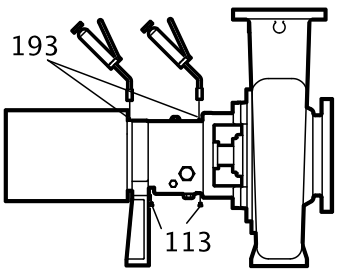

1. Wipe dirt from the grease fittings.
2. Remove the two grease-relief plugs from the bottom of the frame.
3. Fill both of the grease cavities through the fittings with a recommended grease until the fresh grease comes out of the relief holes.
4. Make sure that the frame seals are seated in the bearing housing.
   If they are not, press them in place with the drains located at the bottom.
5. Reinstall the grease-relief plugs.
6. Wipe off any excess grease.
7. Recheck the alignment.

The bearing temperature usually rises after you regrease due to an excess supply of grease. Temperatures return to normal in about two to four operating hours as the pump runs and purges the excess grease from the bearings.

Lubricating-grease requirements

Precautions

NOTICE:

- Never mix greases of different consistencies (NLGI 1 or 3 with NLGI 2) or with different thickeners. For example, never mix a lithium-based grease with a polyurea-based grease. Doing so may result in decreased performance.
- Remove the bearings and old grease if you need to change the grease type or consistency. Failure to do so may result in equipment damage or decreased performance.

Bearing temperature

Bearing temperatures are generally about 20Â°F (18Â°C) greater than bearing-housing outer surface temperatures.
This table shows the type of grease required for the operating temperature of the pump.

Bearing temperature	Type of grease
5°F to 230°F (-15°C to 110°C)	Use a lithium-based mineral-oil grease with a consistency of NLGI 2.
Exceed 350°F (177°C)	Use a high-temperature grease. Mineral-oil greases should have oxidation stabilizers and a consistency of NGLI 3.

Grease recommendations based on temperature

Most pumps use Sunoco 2EP grease. High temperature units that can pump fluids with a temperature greater than 350°F (177°C) use Mobil SCH32.
This table shows which brand of grease to use when lubricating the pump.

Brand	When temperature of pumped fluid is less than 350°F (177°C) âM M NLGI consistency 2	When temperature of pumped fluid is greater than350°F (177°C) âM M NLGI consistency 3
Mobil	Mobilux EP2	SCH32
Exxon	Unirex N2	Unirex N3
Sunoco	Mutipurpose 2EP	N/A
SKF	LGMT 2	LGMT 3

Lubricate the bearings after a shutdown period

1. Flush out the bearings and bearing frame with a light oil to remove contaminants. During flushing, make sure to rotate the shaft slowly by hand.
2. Flush the bearing housing with the proper lubricating oil to ensure oil quality after cleaning.
3. Refer to "Reassembly" section for proper bearing greasing procedure.

Shaft seal maintenance

Mechanical-seal maintenance

WARNING:
The mechanical seal used in an Ex-classified environment must be properly certified. Prior to startup, make sure that all areas that could leak pumped fluid to the work environment are closed.

CAUTION:
Never operate the pump without liquid supplied to mechanical seal. If you run a mechanical seal dry, even for a few seconds, this can cause seal damage. Physical injury can occur if a mechanical seal fails.

Cartridge-type mechanical seals

Cartridge-type mechanical seals are commonly used. Cartridge seals are preset by the seal manufacturer and require no field settings. Cartridge seals installed by the user require disengagement of the holding clips prior to operation, allowing the seal to slide into place. If the seal has been installed in the pump by ITT, these clips have already been disengaged.

Other mechanical seal types

For other types of mechanical seals, refer to the instructions provided by the seal manufacturer for installation and setting.

Reference drawing

The manufacturer supplies a reference drawing with the data package. Keep this drawing for future use when you perform maintenance and seal adjustments. The seal drawing specifies the required flush fluid and attachment points.

Before you start the pump

Check the seal and all flush piping.

Mechanical seal life

The life of a mechanical seal depends on the cleanliness of the pumped fluid. Due to the diversity of operating conditions, it is not possible to give definite indications as to the life of a mechanical seal.

Packed stuffing-box maintenance

WARNING:

- Packed stuffing boxes are not allowed in an ATEX-classified environment.
- Never attempt to replace the packing until the driver is properly locked out and the coupling spacer is removed.

Accepted leakage rate

It is not necessary to shut down or disassemble the pump to inspect the packing operation. During normal operation, the packing should leak approximately one drop per second.

Adjustment of gland

Adjust the gland if the leakage rate is greater than or less than the specified rate.

Evenly adjust each of the two gland bolts with a one-quarter (1/4) turn until the desired leakage rate is obtained. Tighten the bolts to decrease the rate. Loosen the bolts to increase the rate.

Tightening of packing

NOTICE: Never over-tighten packing to the point where less than one drop per second is observed. Over-tightening can cause excessive wear and power consumption during operation.

If you cannot tighten the packing to obtain less than the specified leakage rate, then replace the packing.

Dynamic-seal maintenance

WARNING:
Dynamic seals are not allowed in an ATEX-classified environment.

About the dynamic seal

Dynamic seal parts do not wear substantially to affect operation and do not require maintenance unless the service is particularly abrasive or corrosive.

Repeller

The dynamic repeller prevents pumpage leaks through the stuffing box when the pump operates under published acceptable conditions.

Static seal

A static seal prevents leakage when the pump is shut down. A static seal is either of the following:

- a lip seal
- an elastomeric-face seal
- graphite packing

The only maintenance that the lip seal and the elastomeric-face seal require is replacement when leakage becomes excessive.

The graphite packing should be installed as stuffing-box packing and is designed to run dry.

Disassembly

Disassembly precautions

WARNING:

- This manual clearly identifies accepted methods for disassembling units. These methods must be adhered to. Trapped liquid can rapidly expand and result in a violent explosion and injury. Never apply heat to impellers, propellers, or their retaining devices to aid in their removal unless explicitly stated in this manual.
- Always disconnect and lock out power to the driver before you perform any installation or maintenance tasks. Failure to disconnect and lock out driver power will result in serious physical injury.
  - Electrical connections must be made by certified electricians in compliance with all international, national, state, and local rules.
  - Refer to driver/coupling/gear manufacturers installation and operation manuals (IOM) for specific instructions and recommendations.
- Crush hazard. The unit and the components can be heavy. Use proper lifting methods and wear steel-toed shoes at all times.
- The pump can handle hazardous and toxic fluids. Identify the contents of the pump and observe proper decontamination procedures in order to eliminate the possible exposure to any hazardous or toxic fluids. Wear the proper personal protective equipment. Potential hazards include, but are not limited to, high temperature, flammable, acidic, caustic, explosive, and other risks. You must handle and dispose of pumped fluid in compliance with the applicable environmental regulations.
- A small amount of liquid will be present in certain areas like the seal chamber.

NOTICE:

- Avoid injury. Worn pump components can have sharp edges. Wear appropriate gloves while handling these parts.
- Make sure that all replacement parts are available before you disassemble the pump for overhaul.

Tools required

In order to disassemble the pump, you need these tools:

- Bearing puller
- Brass drift punch
- Cleaning agents and solvents
- Dial indicators
- Feeler gauges
- Hex wrenches
- Hydraulic press
- Induction heater
- Leveling blocks and shims
- Lifting sling
- Micrometer
- Rubber mallet
- Screwdriver
- Snap-ring pliers
- Torque wrench with sockets
- Wrenches

Drain the pump

CAUTION:

- Allow all system and pump components to cool before you handle them to prevent physical injury.
- If your pump is a Model NM3171, NM3196, 3198, 3298, V3298, SP3298, 4150, 4550, or 3107 there is a possible risk of static electric discharge from plastic parts that are not properly grounded. If the pumped fluid is non-conductive, drain and flush the pump with a conductive fluid under conditions that will not allow for a spark to be released to the atmosphere.

1. Close the isolation valves on the suction and discharge sides of the pump.
   You must drain the system if no valves are installed.
2. Open the drain valve.
   Do not proceed until liquid stops coming out of the drain valve. If liquid continues to flow from the drain valve, the isolation valves are not sealing properly and you must repair them before you proceed.
3. Leave the drain valve open and remove the drain plug located on the bottom of the pump housing.
   Do not reinstall the plug or close the drain valve until the reassembly is complete.
4. Drain the liquid from the piping and flush the pump if it is necessary.
5. Disconnect all auxiliary piping and tubing.
6. Remove the coupling guard.

Remove the coupling

1. Disconnect the coupling.
2. Remove the C-face adapter.
3. Remove the coupling-guard pump end-plate.

Remove the back pull-out assembly

CAUTION:
Never remove the back pull-out assembly without assistance.

1. Is your bearing frame oil lubricated?
   - If No: Proceed to step 2.
   - If Yes:
     1. Remove the bearing-frame drain plug (408A) in order to drain oil from the bearing frame.
     2. Replace the plug after the oil is drained.

3. Remove the oil reservoir, if equipped.

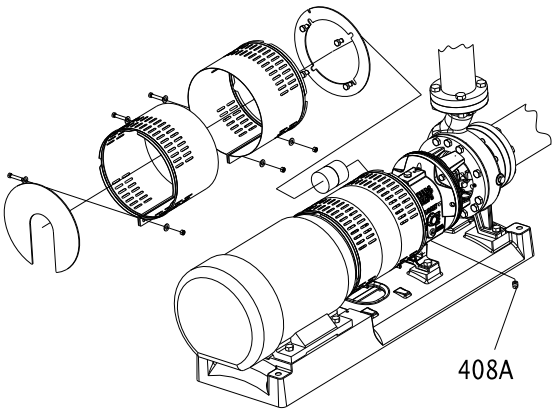

NOTICE:
Oil analysis should be part of a preventive maintenance program that determines the cause of a failure. Save the oil in a clean container for inspection.

2. Does your pump use a C-face adapter?
   - If Yes: Place one sling from the hoist through the frame adapter (108) or frame (228A) for the STi and a second sling from the hoist through the C-face adapter.
   - If No: Place a sling from the hoist through the frame adapter (108) or the frame (228A) for the STi.

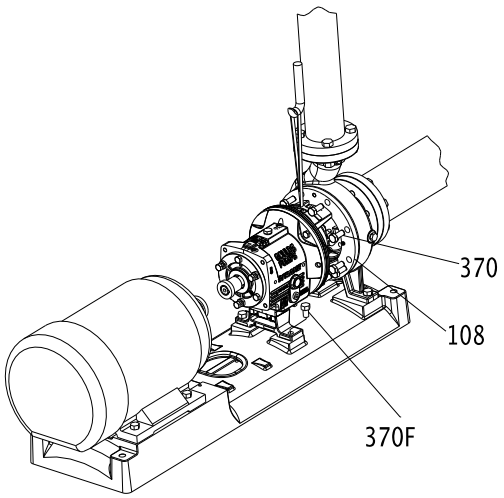

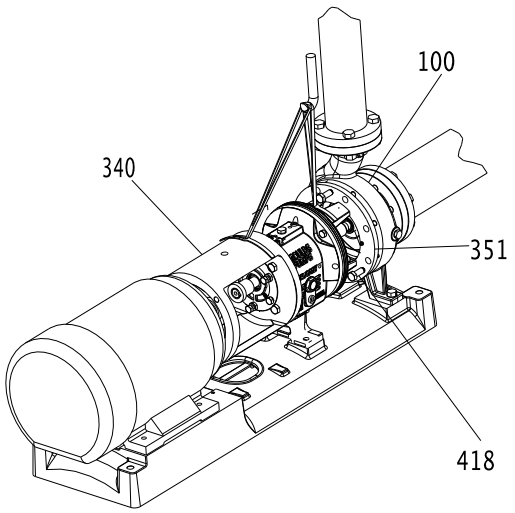

3. Remove the hold-down bolts of the bearing frame foot.
4. Remove the casing bolts.

WARNING:
- Never use heat to disassemble the pump due to the risk of an explosion from trapped liquid.

5. Tighten the jackscrews evenly, using an alternating pattern, in order to remove the back pull-out assembly.
   You can use penetrating oil if the adapter to the casing joint is corroded.
6. Remove the back pull-out assembly from the casing (100).
7. Mark and remove the shims from under the frame foot and save them for reassembly.
8. Remove and discard the casing gasket.
   You will insert a new casing gasket during reassembly.
9. Remove the jackscrews.
10. Clean all gasket surfaces.
    Clean surfaces prevent the casing gasket from partially adhering to the casing due to binders and adhesives in the gasket material.

Remove the coupling hub

1. Clamp the frame adapter securely to the workbench.
2. Remove the coupling hub.
   Mark the shaft for relocation of the coupling hub during reassembly.

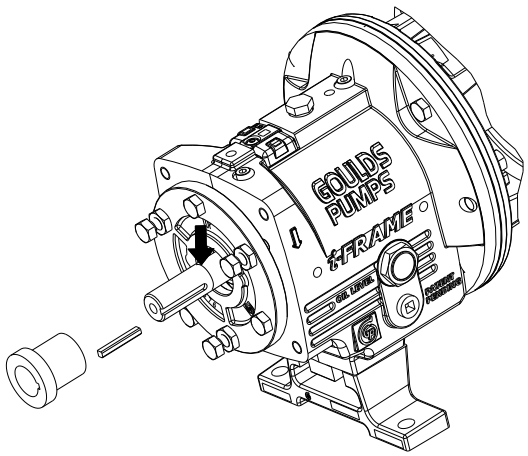

Impeller removal

Remove the impeller (STi, MTi, and LTi)

WARNING:
Never apply heat to remove an impeller. The use of heat may cause an explosion due to trapped liquid, resulting in severe physical injury and property damage.

CAUTION:
Wear heavy work gloves when you handle impellers. The sharp edges can cause physical injury.

1. Slide the shaft wrench (A05107A or A01676A) over the shaft (122) and key.
2. Rotate the impeller (101) clockwise (viewed from the impeller end of the shaft) and raise the wrench off of the work surface.
3. To loosen the impeller, quickly turn it counter-clockwise (viewed from the impeller end of the shaft) while impacting the wrench handle on the workbench or a solid block.

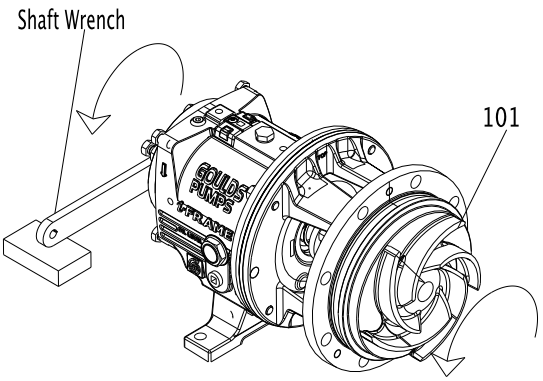

4. Repeat step 3 until the impeller becomes loose.
5. Remove and discard the impeller O-ring (412A). You will insert a new O-ring during reassembly.

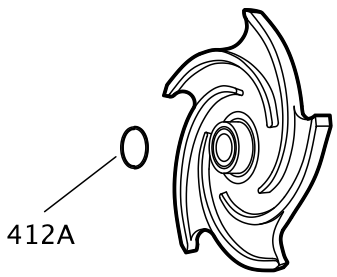

Figure 19: O-ring for models 3196, HT 3196, NM 3196, 3198, and 3796

If the impeller cannot be removed by the previous methods, cut the shaft between the gland and the frame, remove the impeller, stuffing-box cover, gland, sleeve, and shaft end as a unit. Do not apply heat.

Remove the impeller (XLT-i, and i17)

WARNING:
Never apply heat to remove an impeller. The use of heat may cause an explosion due to trapped liquid, resulting in severe physical injury and property damage.

CAUTION:
Wear heavy work gloves when you handle impellers. The sharp edges can cause physical injury.

Clamp the frame foot (241) to the workbench when you use this method to remove the impeller.

1. Remove the impeller plug (458Y) from the front of the impeller (101) and discard the Teflon gasket (428D).

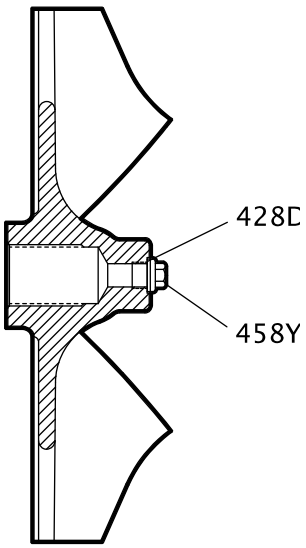

2. Spray penetrating oil through the plug hole into the cavity at the end of the shaft and let it penetrate for 15 minutes.
3. While waiting, rotate the shaft several times to distribute the oil.
4. Slide the shaft wrench (A05107A) over the shaft (122) and key.
5. Rotate the impeller clockwise (viewed from the impeller end of the shaft) and raise the wrench off of the work surface.
6. To loosen the impeller, quickly turn the impeller counter-clockwise (viewed from the impeller end of the shaft) while impacting the wrench handle on the workbench or a solid block.
7. Repeat step 6 until the impeller becomes loose.
8. If step 6 and 7 do not work then do this:
   a) Place a socket wrench over the cast nut on the impeller hub.
   b) Turn the impeller counter-clockwise (viewed from the impeller end of the shaft).

   Be sure that the impeller wrench rests on the workbench or a solid block and that the power end is secure on the work surface.
9. Remove and discard the impeller O-ring (412A).

You will insert a new O-ring during reassembly.

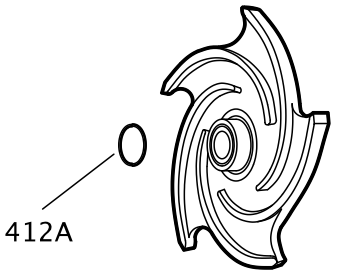

Figure 20: O-ring for models 3196 and HT 3196

If the impeller cannot be removed by the previous methods, cut the shaft between the gland and the frame, remove the impeller, stuffing-box cover, gland, sleeve, and shaft end as a unit. Do not apply heat.

Seal-chamber cover removal

Seal-chamber removal procedures

Choose from one of these procedures to remove the seal-chamber cover.

Table 10: Procedures for seal-chamber cover removal by model

Model	Procedure
3196, CV 3196, HT 3196, LF 3196, 3796	Remove the seal-chamber cover.
NM 3196, 3198	Remove the seal-chamber cover and/or backplate.

Remove the seal-chamber cover (3196, CV 3196, HT 3196, LF 3196, 3796)

1. Remove the gland stud nuts (355).
2. Remove the seal-chamber stud nuts (370H).
3. Remove the seal chamber (184).

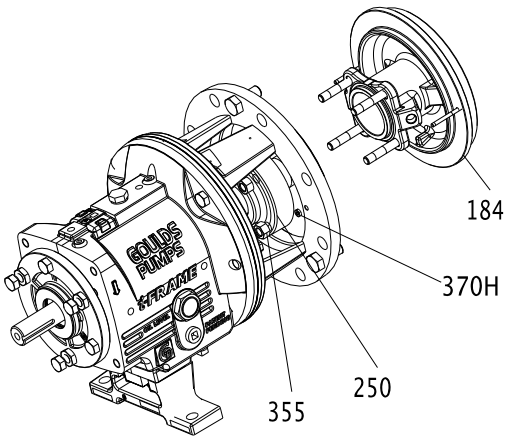

4. Remove the shaft sleeve (126) if it is used.
   The mechanical seal is attached to the sleeve.

NOTICE:
Be careful with the stationary portion of the mechanical seal that is either clamped between the backplate and the gland or seated in the seal-chamber bore. Failure to do so may result in equipment damage.

5. Remove the rotary portion of the seal from the sleeve by loosening the setscrews and sliding it off the sleeve.
   Refer to the mechanical-seal instructions for more information.
6. Remove the gland (250), the stationary portion of the seal, and the O-ring (360Q).

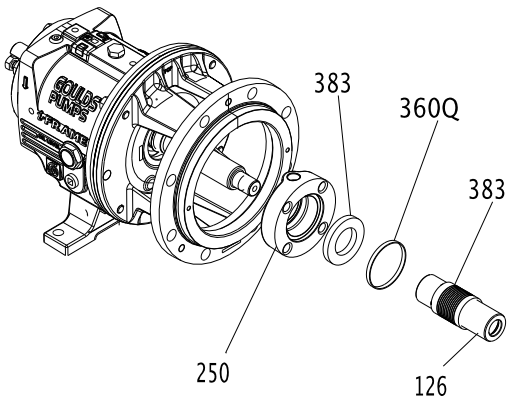

Remove the stuffing-box cover (3196, CV 3196, HT 3196, LF 3196, 3796)

1. Remove the gland nuts (355) and the gland (107).
2. Remove the stuffing-box-cover nuts (370H).
3. Remove the stuffing-box cover (184).

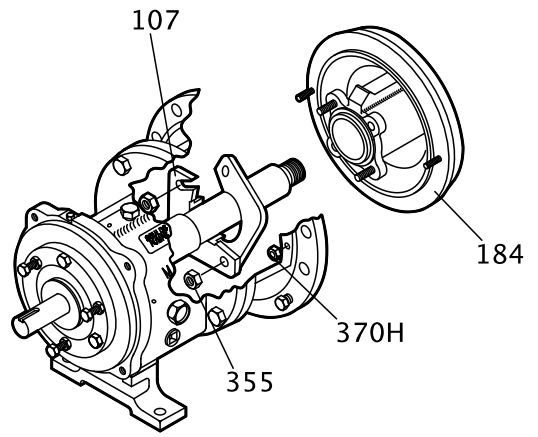

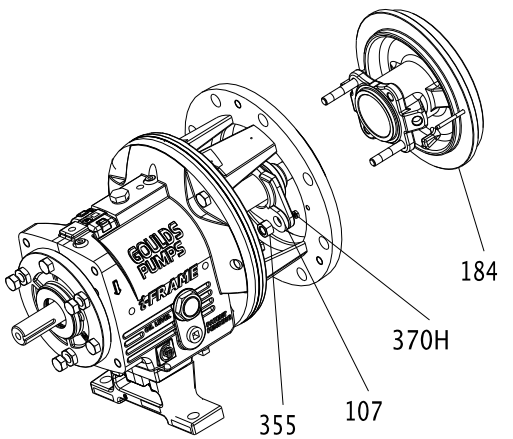

4. Remove the shaft sleeve (126).

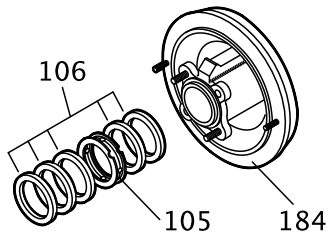

5. Remove the packing (106) and lantern ring (105) from the stuffing-box cover (184). A lantern ring does not come with self-lubricating graphite packing.

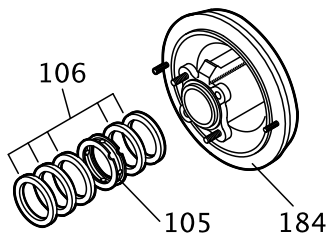

Remove the dynamic seal

1. Remove the stud nuts (370H).
2. Remove the dynamic-seal assembly.

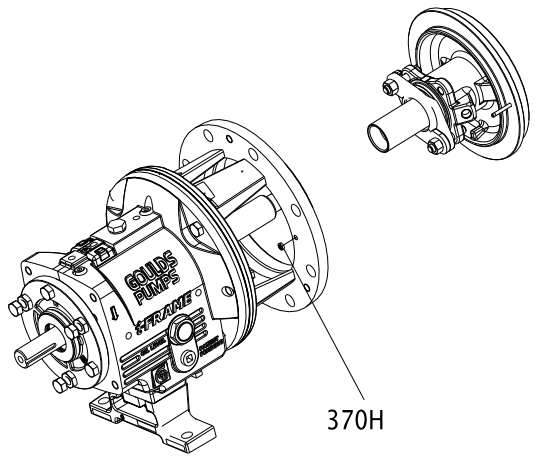

3. Remove the socket head cap screws (265).
4. Remove the packed stuffing box cover (184) and gasket (264).
5. Remove the repeller (262) from the backplate (444).

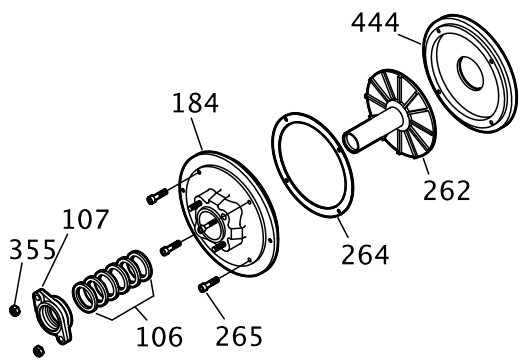

Remove the frame adapter (MTi, LTi, XLT-i, i17)

The 3198 frame adapter is not interchangeable with the adapter of any other model.

1. Remove the dowel pins (469B) and the bolts (370B).
2. Remove the frame adapter (108).
3. Remove and discard the gasket (360D).
   You will install a new gasket during reassembly.

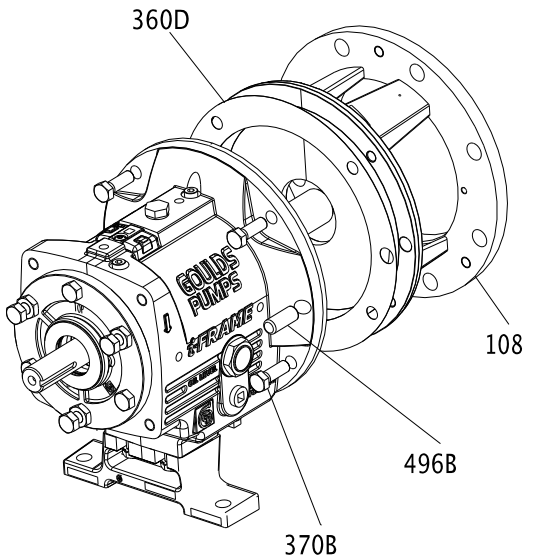

Remove the inboard labyrinth oil seal

Labyrinth oil-seal O-rings are part of the 3196 maintenance kits, and they are sold separately.

1. Determine the fit of your labyrinth oil seal.

Table 11: Labyrinth oil-seal fit

Model	Type of fit
STi	O-ring fit into the bearing-frame adapter (228A)
MTi, LTi, XLT-i and i17	O-ring fit into the frame adapter

2. Remove the O-rings (497H and 497J) and the seal (333A).

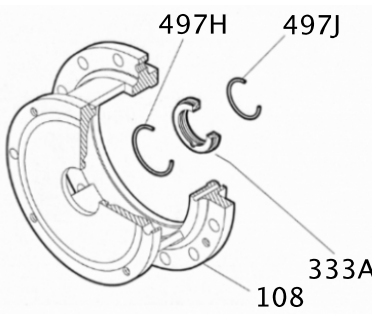

Power-end disassembly

Disassemble the power end (STi, MTi)

1. Remove the clamp screws (370C) and back off the jam nuts (423).
2. Tighten the jack screws (370D) evenly to move the bearing housing (134) out of the bearing frame (228A).

3. Remove the shaft assembly from the bearing frame (228A).

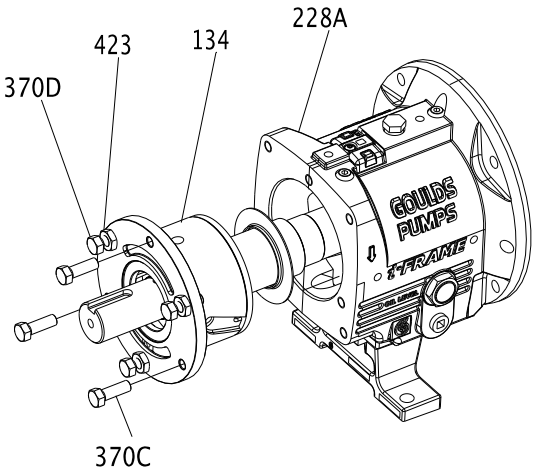

4. Remove the jack screws (370D) with nuts (423).
5. Remove the bearing housing O-ring (496) and the bearings.
6. Remove the outboard bearing retaining snap ring (361A).

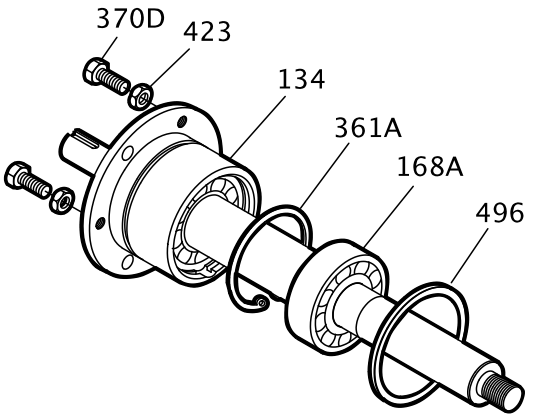

7. Remove the bearing housing (134) and bearings (112A and 168A) from the shaft (122).

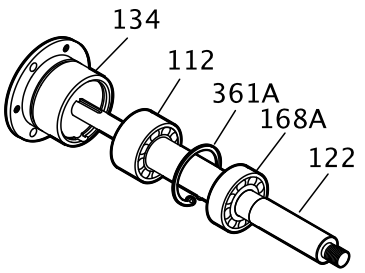

8. Remove the bearing locknut (136) and bearing lock washer (382).
9. Remove the inboard bearing (168A).
10. Remove the outboard bearing (112A).

NOTICE:
Use force only on the inner race when you press bearings off the shaft. Do not use force in situations in which you might break a part. Doing so may result in equipment damage.

NOTICE:
Save the bearings for inspection. Do not reuse the bearings. Doing so may result in decreased performance.

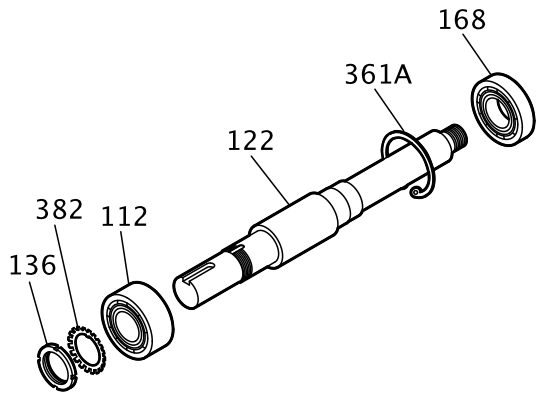

Disassemble the power end (STi and MTi with duplex bearings)

1. Remove the clamp screws (370C) and back off the jam nuts (423).
2. Tighten the jack screws (370D) evenly to move the bearing housing (134) out of the bearing frame (228A).
3. Remove the shaft assembly from the bearing frame (228A).

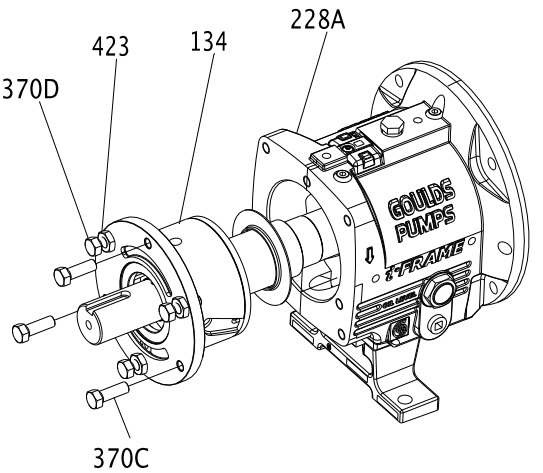

4. Remove the jack screws (370D) with the nuts (423).

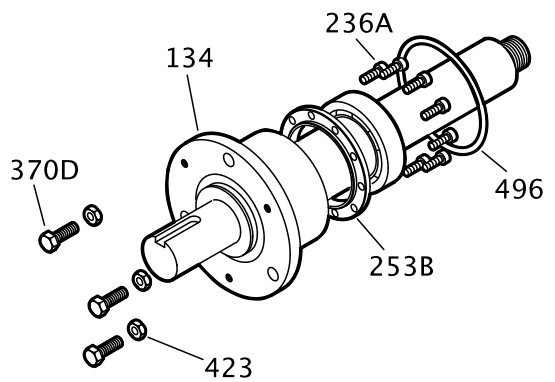

5. Remove the bearing housing O-ring (496).
6. Remove the clamp ring screws (236A) and separate the clamp ring (253B) from the bearing housing (134).
   You must remove the bearings before you can remove the clamp ring from the shaft.
7. Remove the bearing housing (134) and the bearings (112A and 168A) from the shaft (122).

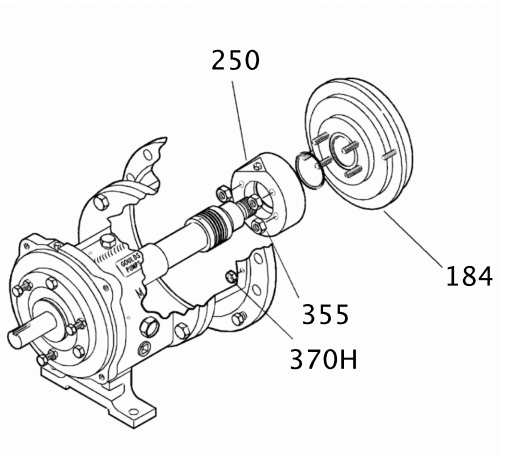

8. Remove the inboard bearing (168A).

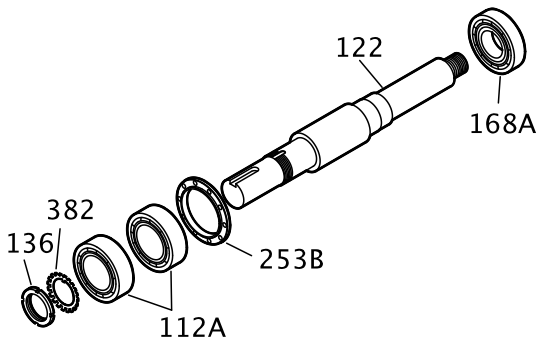

9. Remove the bearing locknut (136) and bearing lockwasher (382).
10. Remove the outboard bearings (112A).

NOTICE:
Use force only on the inner race when you press bearings off the shaft. Do not use force in situations in which you might break a part. Doing so may result in equipment damage.

NOTICE:
Save the bearings for inspection. Do not reuse the bearings. Doing so may result in decreased performance.

11. Remove the outboard labyrinth oil seal (332A) from the bearing housing (134).

Remove the O-rings (497F and 497G) if it is necessary. Labyrinth oil seal O-rings are part of the 3196 maintenance kits and they are sold separately.

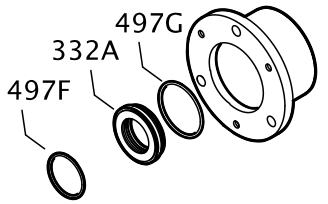

Disassemble the power end (LTi)

1. Remove the clamp screws (370C) and back off the jam nuts (423).
2. Evenly tighten the jack screws (370D) to move the bearing housing (134) out of the bearing frame (228A).
3. Remove the shaft assembly from the bearing frame (228A).

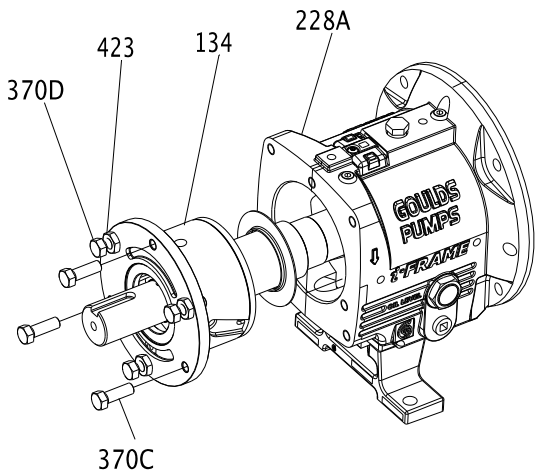

4. Remove the jack screws (370D) with the nuts (423).
5. Remove the clamp-ring screws (236A) and separate the clamp ring (253B) from the bearing housing (134).
   You must remove the bearings before you can remove the clamp ring from the shaft.

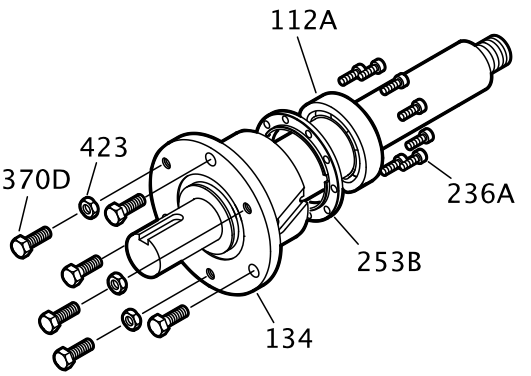

6. Remove the bearing housing (134) and the bearings (112A and 168A) from the shaft (122).

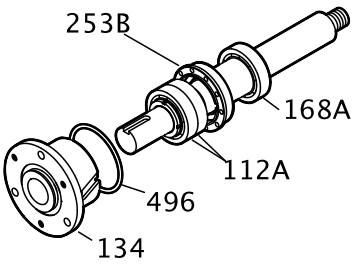

7. Remove the bearing housing O-ring (496) and the inboard bearing (168A).

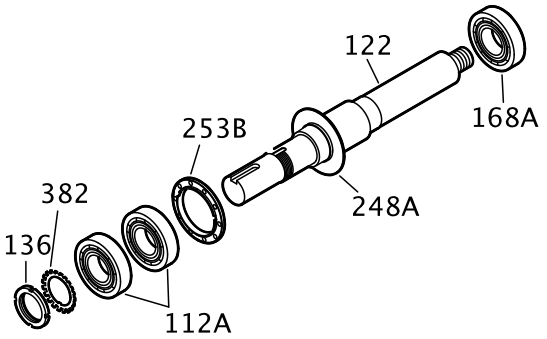

8. Remove the bearing locknut (136) and the bearing lockwasher (382).
9. Remove the outboard bearings (112A) and the clamp ring (253B).

NOTICE:
Do not remove the oil flinger unless it is damaged. Doing so may result in unnecessary shutdown time or equipment damage.

NOTICE:
Use force only on the inner race when you press bearings off the shaft. Do not use force in situations in which you might break a part. Doing so may result in equipment damage.

NOTICE:
Save the bearings for inspection. Do not reuse the bearings. Doing so may result in decreased performance.

10. Remove the outboard labyrinth oil seal (332A) from the bearing housing (134).
11. Remove the O-rings (497F and 497G) if it is necessary.

Labyrinth oil-seal O-rings are part of the 3196 maintenance kits, and they are sold separately.

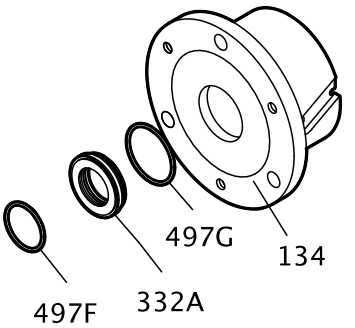

Disassemble the power end (XLT-i and i17)

1. Remove the bearing frame from the frame foot (241) using the frame-foot bolts (370F).

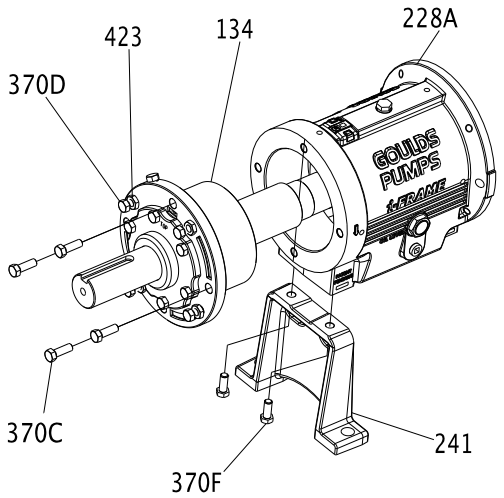

2. Remove the clamp screws (370C) and back off the jam nuts (423).
3. Tighten the jack screws (370D) evenly to move the bearing housing (134) out of the bearing frame (228A).
4. Remove the shaft assembly from the bearing frame (228A).
5. Remove the jack screws (370D), the nuts (423), and the bearing housing O-ring.
6. Remove the inboard bearing (168A).

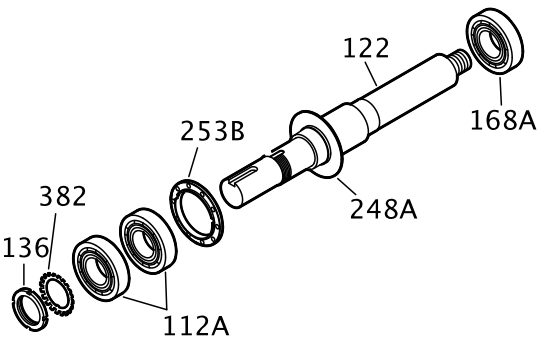

7. Remove the bolts (371C), the bearing end cover (109A), and the gasket (360C).
8. Remove the outboard labyrinth oil seal (332A) from the end cover (109A).

9. Remove the O-rings (497F and 497G) if it is necessary.
   Labyrinth oil-seal O-rings are part of the 3196 maintenance kits, and they are sold separately.

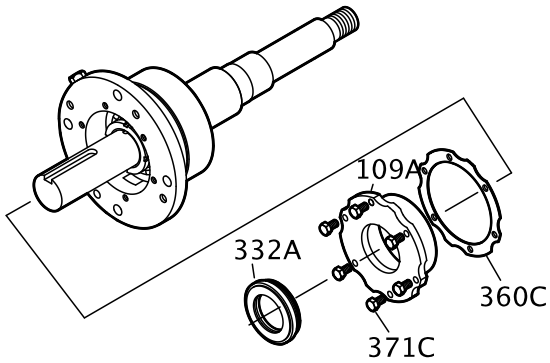

10. Remove the bearing housing (134) and the bearing (112A) from the shaft (122).

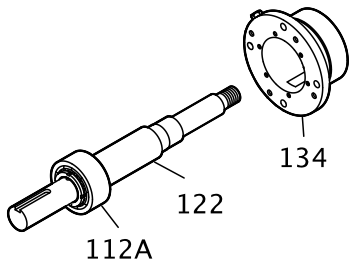

11. Remove the bearing locknut (136), the bearing lockwasher (382), and the outboard bearing (112A).

NOTICE:
Use force only on the inner race when you press bearings off the shaft. Do not use force in situations in which you might break a part. Doing so may result in equipment damage.

NOTICE:
Save the bearings for inspection. Do not reuse the bearings. Doing so may result in decreased performance.

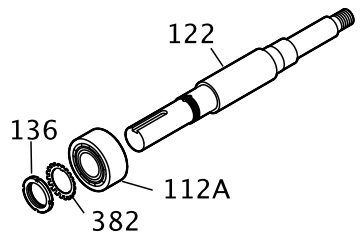

Disassemble the power end (XLT-i and i17 with duplex bearings)

1. Remove the bearing frame to frame foot (241) using the frame-foot bolts (370F).

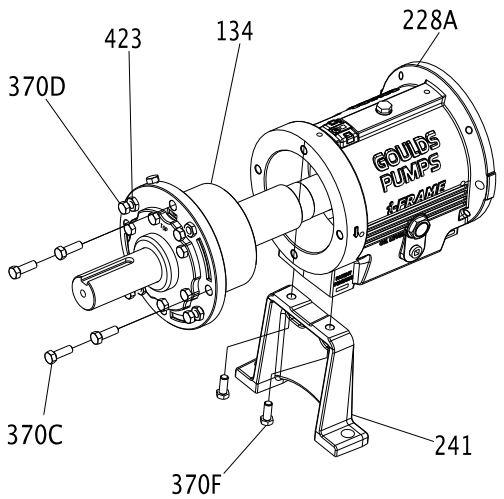

2. Remove the clamp screws (370C) and back off the jam nuts (423).
3. Tighten the jack screws (370D) evenly to move the bearing housing (134) out of the bearing frame (228A).
4. Remove the shaft assembly from the bearing frame (228A).
5. Remove the jack screws (370D) and the nuts (423).
6. Remove the bearing housing O-ring (496) and the inboard bearing (168A).

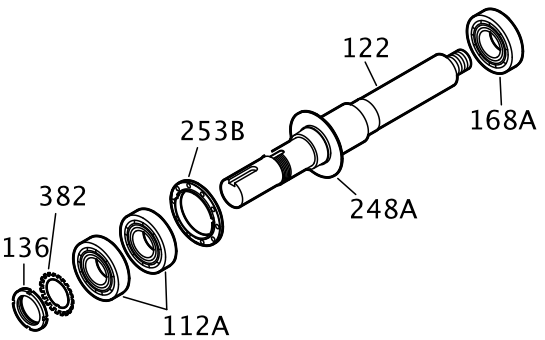

7. Remove the bolts (371C), the end cover (109A), and the gasket (360C).
8. If necessary, remove the outboard labyrinth oil seal (332A) from the end cover (109A) and remove the O-rings (497F and 497G).

Labyrinth oil-seal O-rings are part of the 3196 maintenance kits, or they are sold separately.

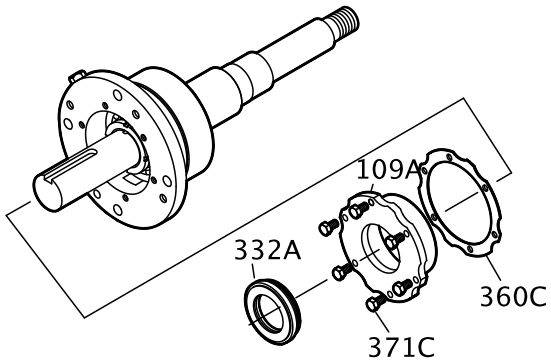

9. Remove the bearing housing (134) and bearings (112A) from the shaft (122) .

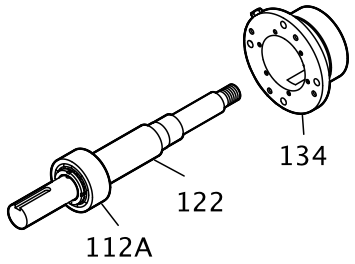

10. Remove the bearing locknut (136), the bearing lockwasher (382), and the outboard bearing (112A).

NOTICE:
Use force only on the inner race when you press bearings off the shaft. Do not use force in situations in which you might break a part. Doing so may result in equipment damage.

NOTICE:
Save the bearings for inspection. Do not reuse the bearings. Doing so may result in decreased performance.

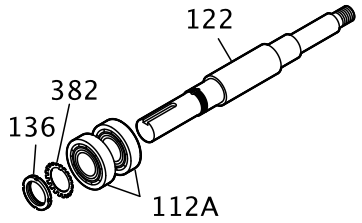

Disassemble the bearing frame

1. Remove these plugs from the bearing frame (228A).
   - oil-fill plug (113A)
   - oil-drain plug (408A)
   - sight-oiler plug (408J)
   - four oil mist/grease connection plugs (408H)
   - oil-cooler inlet and outlet plugs (408L and 408M) or oil cooler

2. For the MTi and LTi models, remove the bearing frame foot-to-frame bolts (370F) and the frame foot (241).

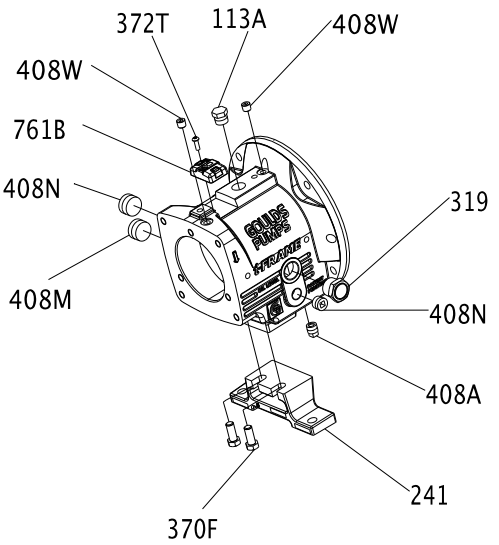

Guidelines for i-ALERT™ Condition Monitor disposal

Precautions

WARNING:
- Never heat the condition monitor to temperatures in excess of 300°F (149°C). Heating to these temperatures could result in death or serious injury.
- Never dispose of the condition monitor in a fire. This could result in death or serious injury.

Guidelines

The battery contained in the condition monitor does not contain enough lithium to qualify as reactive hazardous waste. Use these guidelines when disposing of the condition monitor.

- The condition monitor is safe for disposal in the normal municipal waste stream.
- Adhere to local laws when you dispose of the condition monitor.

Disassemble the C-face adapter

NOTICE:
You must properly support the motor with a clean, uncorroded eye bolt or a strap under both end bells. Failure to do so may result in equipment damage.

1. Loosen the motor-mounting bolts and remove the motor.

Table 12: Required number of motor-mounting bolts
This table shows the number of motor-mounting bolts.

Pump frame	Motor frame	Number of bolts
STi	All	4
MTi and LTi	143-286	4
	324-365	8

2. Loosen the bolts attached to the bearing-frame flange and remove the C-face adapter from the bearing frame.

Pre-assembly inspections

Guidelines

Before you assemble the pump parts, make sure you follow these guidelines:

- Inspect the pump parts according to the information in these pre-assembly topics before you reassemble your pump. Replace any part that does not meet the required criteria.
- Make sure that the parts are clean. Clean the pump parts in solvent in order to remove oil, grease, and dirt.

NOTICE:
Protect machined surfaces while you clean the parts. Failure to do so may result in equipment damage.

Replacement guidelines

Casing check and replacement

WARNING:
Avoid death or serious injury. Leaking fluid can cause fire and/or burns. Inspect and assure gasket sealing surfaces are not damaged and repair or replace as necessary.

Inspect the casing for cracks and excessive wear or pitting. Thoroughly clean gasket surfaces and alignment fits in order to remove rust and debris.

Repair or replace the casing if you notice any of these conditions:

- Localized wear or grooving that is greater than 1/8 in. (3.2 mm) deep
- Pitting that is greater than 1/8 in. (3.2 mm) deep
- Irregularities in the casing-gasket seat surface

Casing areas to inspect

The arrows point to the areas to inspect for wear on the casing:

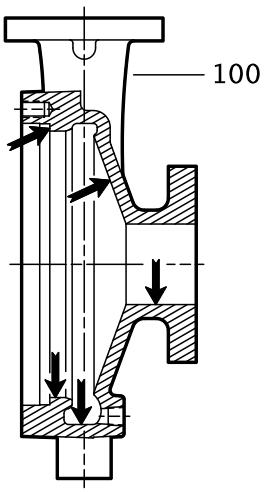

Figure 21: 3196, HT 3196, LF 3196, NM 3196, and 3198 casing

Impeller replacement

This table shows the criteria for replacing the impeller:

Impeller parts	When to replace
Impeller vanes	• When grooved deeper than 1/16 in. (1.6 mm), or • When worn evenly more than 1/32 in. (0.8 mm)
Pumpout vanes	When worn or bent more than 1/32 in. (0.8 mm)
Vane edges	When you see cracks, pitting, or corrosion damage

Impeller areas to inspect

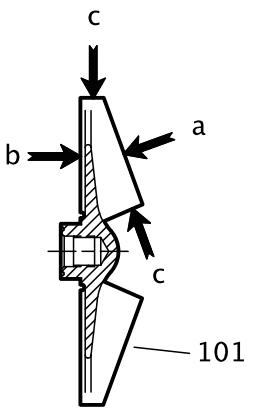

Figure 22: Areas to inspect for wear on the 3196 impeller.

Frame adapter check and replacement

- Replace the frame adapter if it has cracks or excessive corrosion damage.
- Make sure the gasket surface is clean.

Dynamic-seal repeller replacement

This table shows the criteria for replacing dynamic-seal repeller parts for the 3196, CV 3196, and LF 3196 pump models.

Dynamic seal part	When to replace
Dynamic-seal repeller vane	The grooves are deeper than 1/16 in. (1.6 mm) or are worn evenly more than 1/32 in. (0.8 mm).
Sleeve surface	The surface has grooves, pitting, or other damage.

Labyrinth seal replacement

Replace the labyrinth-seal O-ring if it has cuts and cracks.

Gaskets, O-rings, and seats replacement

WARNING:
Avoid death or serious injury. Leaking fluid can cause fire and/or burns. Replace any damaged or worn gaskets/o-rings.

- Replace all gaskets and O-rings at each overhaul and disassembly.
- Inspect the seats. They must be smooth and free of physical defects.
  In order to repair worn seats, skin cut them in a lathe while you maintain dimensional relationships with other surfaces.
- Replace parts if the seats are defective.

Shaft and sleeve replacement guidelines

Two types of sleeves

The 3198 is offered with either a metallic sleeve that uses the standard 3196 shaft or a Teflon sleeve. The Teflon sleeve requires a special shaft and a different inboard labyrinth oil seal.

Shaft measurements check

Replace the shaft (122) if any measurements exceed acceptable values. See Bearing fits and tolerances.

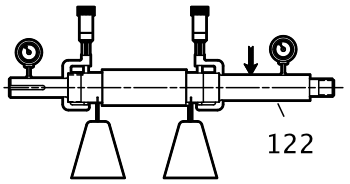

Straightness check

Replace the shaft (122) if runout exceeds the values in this table:

Table 13: Shaft runout tolerances for sleeve fit and coupling fit

	Sleeve fit in inches (millimeters)	Coupling fit in inches (millimeters)
With sleeve	0.001 (0.025)	0.001 (0.025)
Without sleeve	0.002 (0.051)	0.001 (0.025)

Shaft and sleeve check

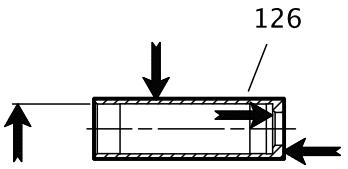

- Check the shaft and sleeve (126) surface for grooves and pitting.
- Replace the shaft and sleeve if any grooves or pits are found.

Bearing-frame inspection

Checklist

Check the bearing frame for these conditions:

- Visually inspect the bearing frame and frame foot for cracks.
- Check the inside surfaces of the frame for rust, scale, or debris. Remove all loose and foreign material.
- Make sure that all lubrication passages are clear.
- If the frame has been exposed to pumped fluid, inspect the frame for corrosion or pitting.
- Inspect the inboard-bearing bores.
  If any bores are outside the measurements in the Bearing fits and tolerances table, replace the bearing frame.

Surface inspection locations

This figure shows the areas to inspect for wear on the bearing frame outside surface.

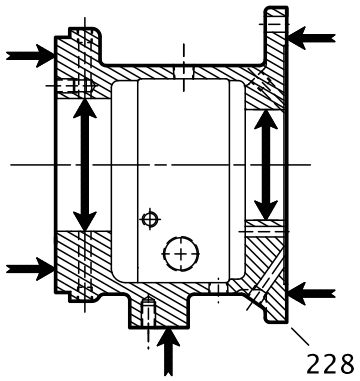

Figure 23: Outside surface inspection locations

This figure shows the areas to inspect for wear on the bearing frame inside surface.

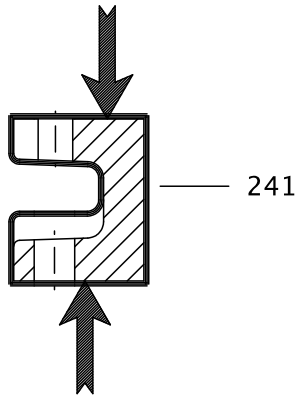

Figure 24: Inside surface inspection locations

C-face adapter inspection

Checklist

- Visually inspect the C-face adapter (340) for cracks.
- Check all surfaces for rust, scale, or debris and remove all loose and foreign material.
- Check for corrosion or pitting.

This figure shows the areas to inspect for cracks on the C-face adapter.

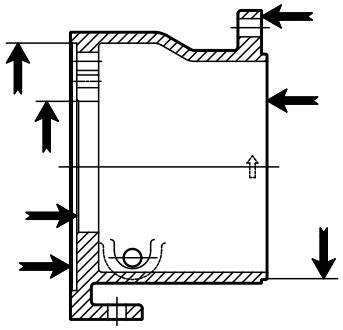

Figure 25: C-face adapter inspection locations

Seal chamber and stuffing box cover inspection

Checklist

Perform these checks when you inspect the seal chamber and stuffing box cover:

- Make sure that these surfaces are clean:
  - Seal chamber and stuffing box cover
  - Dynamic-seal backplate gasket
  - Mounting
- Make sure there is no pitting or wear greater than 1/8 in. (3.2 mm) deep. Replace the seal chamber and stuffing box cover if pitting or wear exceeds this measurement.
- Inspect the machined surfaces and mating faces noted in the figures.

These images point to the areas to inspect:

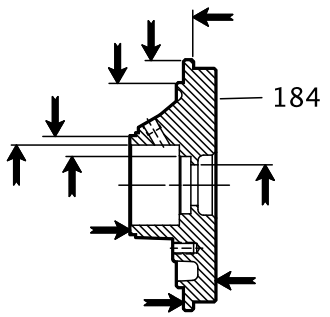

Figure 26: BigBore™ chamber

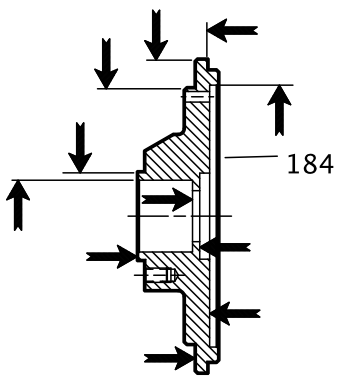

Figure 27: Stuffing box cover

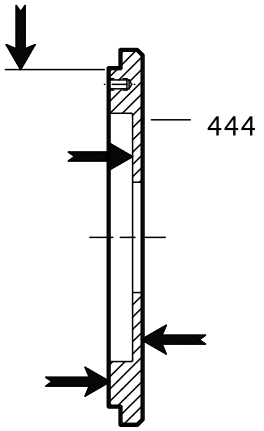

Figure 28: Dynamic-seal backplate

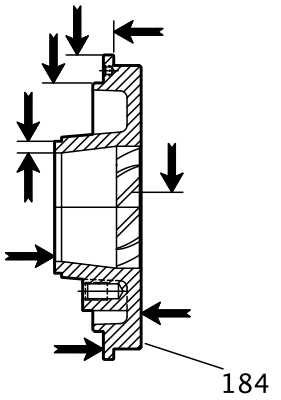

Figure 29: TaperBore™ Plus

Bearings inspection

Condition of bearings

Do not reuse bearings. The condition of the bearings provides useful information on operating conditions in the bearing frame.

Checklist

Perform these checks when you inspect the bearings:

- Inspect the bearings for contamination and damage.
- Note any lubricant condition and residue.
- Inspect the ball bearings to see if they are loose, rough, or noisy when you rotate them.
- Investigate any bearing damage to determine the cause. If the cause is not normal wear, correct the issue before you return the pump to service.

Bearing-housing inspection

Checklist

- Inspect the bearing-housing (134) bore according to the bearing fits and tolerances table.

- Replace the bearing housing if the dimensions exceed acceptable values. Reference: see Bearings fits and tolerances.
- Visually inspect the bearing housing for cracks and pits.

Checklist for specific models

This table shows bearing-housing checks that are required for specific models of pump.

Frame	Bearing-housing check
STi and MTi	Ensure that the snap-ring groove is not cracked.
LTi	Clear all grooves and holes.
XLT-i and i17	Clean the gasket surface.

Inspection locations

The following images point to the areas to inspect on the bearing housing.

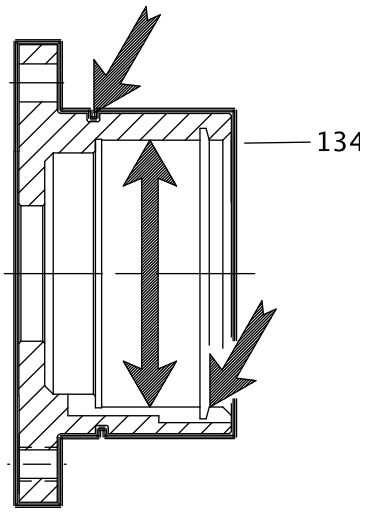

Figure 30: STi and MTi bearing housing

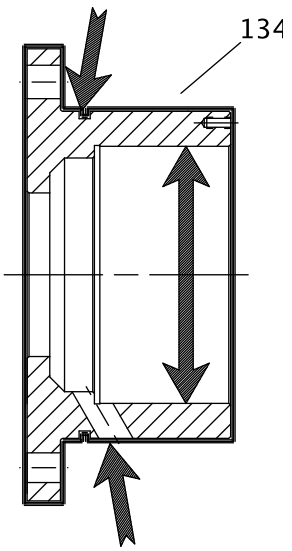

Figure 31: LTi bearing housing

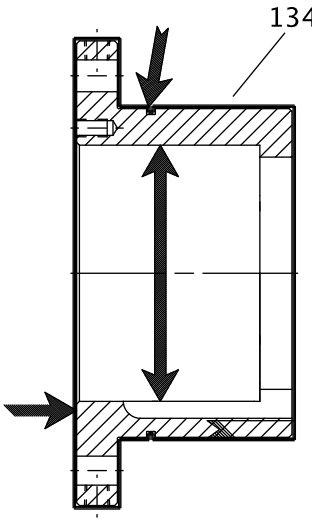

Figure 32: XLT-i and i17 bearing housing

Bearing fits and tolerances

Table 14: Bearing fits and tolerances table

This table references the bearing fits and tolerances according to the ABEC I standard.

	STi inches (millimeters)	MTi inches (millimeters)	LTi inches (millimeters)	XLT-i, i-17 inches (millimeters)
Shaft OD Inboard	1.3785 (35.014) 1.3781 (35.004)	1.7722 (45.014) 1.7718 (45.004)	2.1660 (55.016) 2.1655 (55.004)	2.5597 (65.016) 2.5592 (65.004)
Clearance	0.0010 (0.025) tight 0.0001 (0.003) tight	0.0010 (0.025) tight 0.0001 (0.003) tight	0.0012 (0.030) tight 0.0001 (0.003) tight	0.0012 (0.030) tight 0.0001 (0.003) tight
Bearing ID Inboard	1.3780 (35.001) 1.3775 (34.989)	1.7717 (45.001) 1.7712 (44.988)	2.1654 (55.001) 2.1648 (54.986)	2.5591 (65.001) 2.5585 (64.986)
Frame ID Inboard	2.8346 (72.000) 2.8353 (72.017)	3.9370 (100.000) 3.9379 (100.023)	4.7244 (120.000) 4.7253 (120.023)	5.5118 (140.000) 5.5128 (140.025)
Clearance	0.0012 (0.031) loose 0.0000 (0.000) loose	0.0015 (0.038) loose 0.0000 (0.000) loose	0.0015 (0.038) loose 0.0000 (0.000) loose	0.0017 (0.043) loose 0.0000 (0.000) loose
Bearing OD Inboard	2.8346 (72.000) 2.8341 (71.986)	3.9370 (100.000) 3.9364 (99.985)	4.7244 (120.000) 4.7238 (119.985)	5.5118 (140.000) 5.5111 (139.982)
Shaft OD Outboard	1.1815 (30.010) 1.1812 (30.002)	1.7722 (45.014) 1.7718 (45.004)	1.9690 (50.013) 1.9686 (50.003)	2.5597 (65.016) 2.5592 (65.004)
Clearance	0.0008 (0.020) tight 0.0001 (0.003) tight	0.0010 (0.025) tight 0.0001 (0.003) tight	0.0010 (0.025) tight 0.0001 (0.003) tight	0.0012 (0.030) tight 0.0001 (0.003) tight
Bearing OD Outboard	1.1811 (30.000) 1.1807 (29.990)	1.7717 (45.001) 1.7712 (44.988)	1.9685 (50.000) 1.9680 (49.987)	2.5591 (65.001) 2.5585 (64.986)
Housing OD Outboard	2.8346 (72.000) 2.8353 (72.017)	3.9370 (100.000) 3.9379 (100.022)	4.3307 (110.000) 4.3316 (110.023)	5.5118 (140.000) 5.5128 (140.025)
Clearance	0.0012 (0.031) loose 0.0000 (0.000) loose	0.0015 (0.038) loose 0.0000 (0.000) loose	0.0015 (0.038) loose 0.0000 (0.000) loose	0.0017 (0.043) loose 0.0000 (0.000) loose
Bearing OD Outboard	2.8346 (72.000) 2.8341 (71.986)	3.9370 (100.000) 3.9364 (99.985)	4.3307 (110.000) 4.3301 (109.985)	5.5118 (140.000) 5.5111 (139.982)

Reassembly

Assemble the rotating element and the bearing frame (STi and MTi)

CAUTION:
Wear insulated gloves when you use a bearing heater. Bearings get hot and can cause physical injury.

NOTICE:
Make sure that the pipe threads are clean, and that you apply thread sealant to the plugs and fittings. Failure to do so may result in equipment damage or decreased performance.

NOTICE:
Use an induction heater that heats as well as demagnetizes the bearings when you install bearings. Failure to do so may result in decreased performance.

1. Prepare the bearing frame (228) as follows (see the illustration):
   a) Install the oil-fill plug (113A).
   b) Install the oil-drain plug (408A).
   c) Install the sight glass (319).
   d) Install the sight oiler plug (408J).
   e) Install the plug for the oil-cooler inlet (408L).
   f) Install the plug for the oil-cooler outlet (408M).
   g) Install four oil-mist connection plugs (408H).
      Or: Install two grease fittings (193) and two grease-relief plugs (113).
   h) Attach the bearing-frame foot (241) and fasten the bolts (370F) by hand.

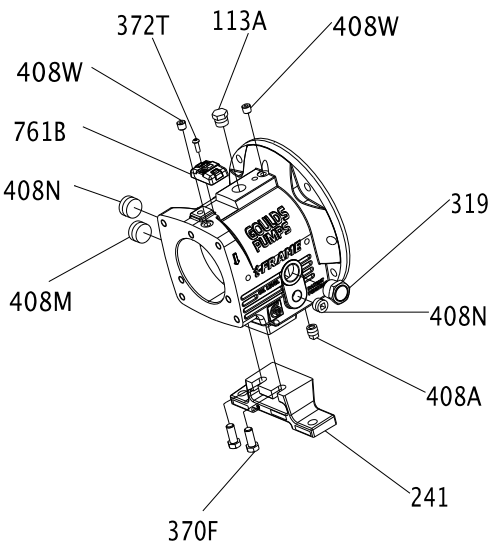

2. Install the outboard bearing (112A) on the shaft (122).
   The regreaseable bearing has a single shield. The outboard bearing is installed with the shield toward the impeller.
   a) Inspect the shaft (122) to ensure that it is clean, dimensionally correct, and is free of nicks and burrs.
   b) Lightly coat the bearing seating with a thin film of oil.
   c) Remove the bearing (112) from its packaging.
   d) Wipe the preservative from the bearing (112) bore and outer diameter.

e) Use an induction heater with a demagnetizing cycle to heat the bearing (112) to an inner ring temperature of 230 °F (110 °C).
f) Position the bearing (112) on the shaft (122) against the shoulder and snug the locknut (136) against the bearing until it is cool.
The locknut prevents the bearing from moving away from the shaft shoulder as it cools.
g) Remove the bearing locknut (136) after the bearing (112) cools.

3. Put the lockwasher (382) onto the shaft (122).
4. Thread the locknut (136) onto the shaft (122) and tighten it until it is snug.
5. Bend the tangs of the lockwasher into the slots of the locknut.
6. Put the bearing-retaining ring (361A) onto the shaft (122).
Make sure that the flat side of the ring is towards the bearing.
7. Coat the inner surfaces of the bearings with lubricant.
8. Put the inboard bearing (168) onto the shaft (122).
The regreasable bearing has a single shield. Make sure that the bearing is installed with the shield away from the impeller.

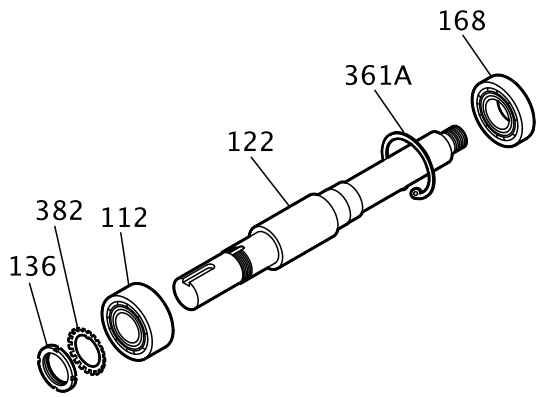

9. Prepare the shaft for assembly as follows (see the illustration):
a) Install a new O-ring (496).
b) Coat the outside of the outboard bearing (112A) with oil.
c) Coat the bore of the bearing housing (134) with oil.
d) Put the bearing housing (134) onto the shaft.
Do not use force.
e) Insert the bearing-retaining ring (361A) into the bore groove of the bearing housing (134).

NOTICE:
Ensure that the space between the ends of the retaining ring are located in the oil-return groove. Failure to do so may result in oil-flow obstruction.

Make sure that the shaft rotates freely.

f) Install the outboard labyrinth oil-seal (332A) into the bearing housing (134).
Place the drain slots of the oil seal at the bottom position (6 o'clock).
Make sure that the edges of the keyway are free from burrs. To protect the O-ring, cover the keyway lengthwise with a piece of electrical tape before you install the oil seal.

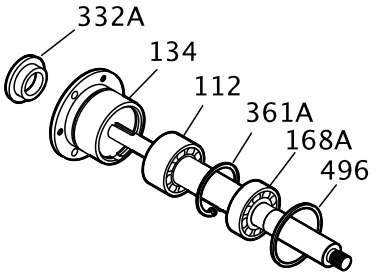

10. Install the shaft assembly into the bearing frame as follows (see the illustration):
    a) Coat the outside of the bearing housing (134) with oil.
    b) Coat all the internal surfaces of the bearing frame (228) with oil.
    c) Install the shaft assembly into the bearing frame (228).
    Make sure that the shaft rotates freely.
    d) Install the clamp bolts (370C) in the bearing housing (134) and tighten by hand.
    e) Install the jack bolts (370D) with the locknuts (423) in the bearing housing (134) and tighten by hand.

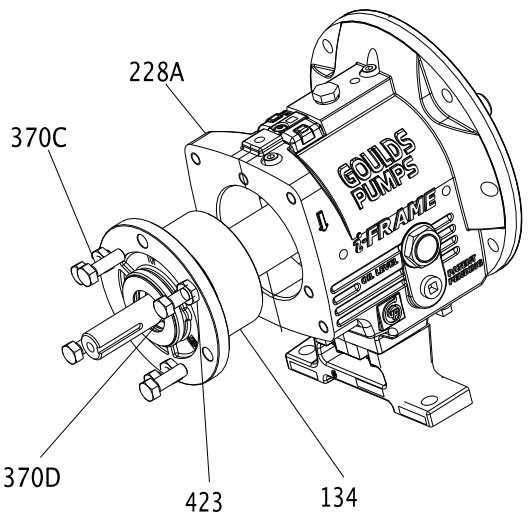

Assemble the rotating element and the bearing frame (STi and MTi with duplex bearings)

CAUTION:
- Wear insulated gloves when you use a bearing heater. Bearings get hot and can cause physical injury.
- Use care when you handle the shaft because it can be heavy. Failure to do so could result in personal injury.

NOTICE:
Make sure that the pipe threads are clean, and that you apply thread sealant to the plugs and fittings. Failure to do so may result in equipment damage or decreased performance.

NOTICE:
Use an induction heater that heats as well as demagnetizes the bearings when you install bearings. Failure to do so may result in decreased performance.

1. Prepare the bearing frame (228) as follows (see the illustration):
   a) Install the oil-fill plug (113A).
   b) Install the oil-drain plug (408A).
   c) Install the sight glass (319).
   d) Install the sight oiler plug (408J).
   e) Install the plug for the oil-cooler inlet (408L).
   f) Install the plug for the oil-cooler outlet (408M).
   g) Install four oil-mist connection plugs (408H).
      Or: Install two grease fittings (193) and two grease-relief plugs (113).
   h) Attach the bearing-frame foot (241) and fasten the bolts (370F) by hand.

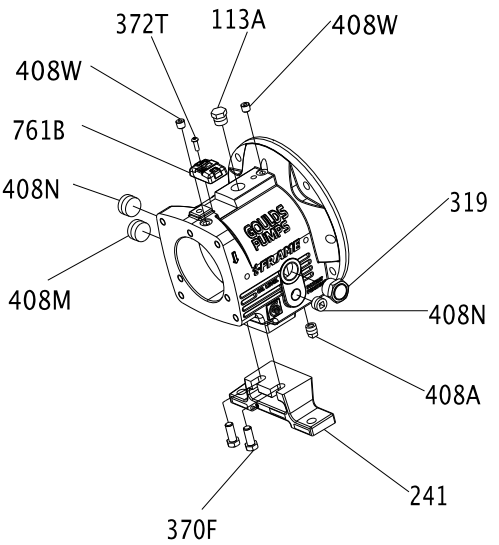

2. Install the outboard bearings (112A) on the shaft (122).
   The regreasable bearing has a single shield. Make sure that the bearing is installed with the shield away from the impeller.
   The duplex bearings are mounted back-to-back. Make sure that the orientation of the bearings are correct.
   a) Inspect the shaft (122) to ensure that it is clean, dimensionally correct, and is free of nicks and burrs.

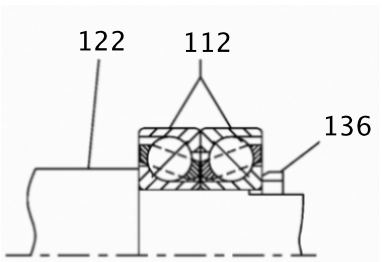

b) Lightly coat the bearing seating with a thin film of oil.
c) Remove the bearings (112) from their packaging.
d) Wipe the preservative from the bearing (112) bore and outer diameter.
e) Use an induction heater with a demagnetizing cycle to heat both bearings (112) to an inner ring temperature of 230 °F (110 °C).
f) Place both bearings (112) on the shaft (122) with the large outer races together (back-to-back).
g) Position the bearings (112) on the shaft (122) against the shoulder and snug the locknut (136) against the bearings until they are cool.
The locknut prevents the bearings from moving away from the shaft shoulder as they cool. Rotate the outer bearing rings relative to each other as they are placed on the shaft to assure good alignment.
h) Remove the bearing locknut (136) after the bearings (112) are cool.

3. Put the lockwasher (382) onto the shaft (122).
4. Thread the locknut (136) onto the shaft (122) and tighten it until it is snug.
5. Bend the tangs of the lockwasher into the slots of the locknut.
6. Place the bearing-clamp ring (253B) onto the shaft (122).
Make sure that the orientation of the bearing-clamp ring is correct.
7. Coat the inner surfaces of the bearings with lubricant.
8. Put the inboard bearing (168) onto the shaft (122).

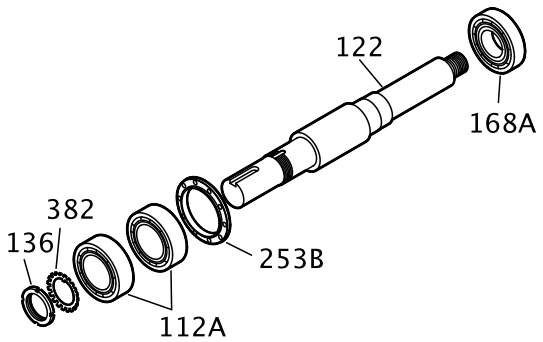

9. Install the bearing housing as follows (see the illustration):
a) Coat the outside of the outboard bearing (112A) with oil.
b) Coat the bore of the bearing housing (134) with oil.
c) Put the bearing housing (134) onto the shaft.
Do not use force.

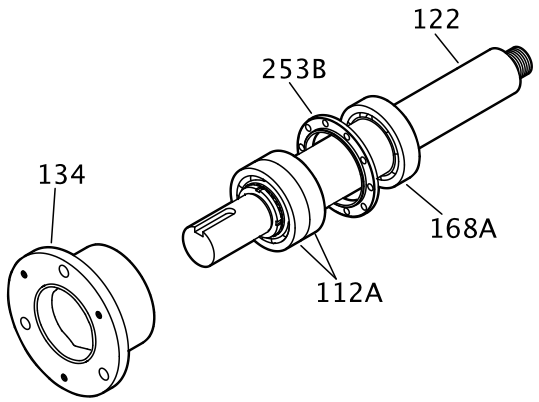

10. Prepare the shaft for assembly as follows (see the illustration):
a) Place the bearing-clamp ring (253B) onto the shaft (122).

b) Fasten the clamp-ring bolts (236A) crosswise.
See the specified torque values.
Make sure that the shaft rotates freely.
c) Install a new O-ring (496).
d) Install the outboard labyrinth oil-seal (332A) into the bearing housing (134).
Place the drain slots of the oil seal at the bottom position (6 o'clock).
Make sure that the edges of the keyway are free from burrs. To protect the O-ring, cover the keyway lengthwise with a piece of electrical tape before you install the oil seal.

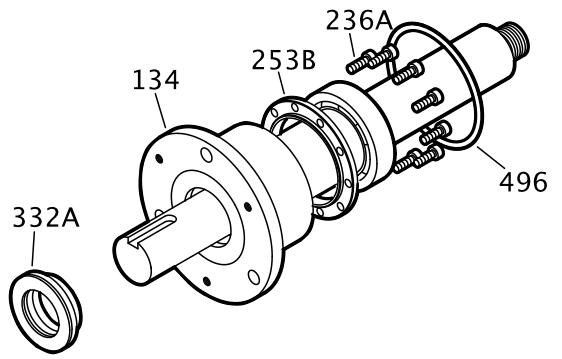

11. Install the shaft assembly into the bearing frame as follows (see the illustration):
a) Coat the outside of the bearing housing (134) with oil.
b) Coat all the internal surfaces of the bearing frame (228) with oil.
c) Install the shaft assembly into the bearing frame (228).
Make sure that the shaft rotates freely.
d) Install the clamp bolts (370C) in the bearing housing (134) and tighten by hand.
e) Install the jack bolts (370D) with the locknuts (423) in the bearing housing (134) and tighten by hand.

Assemble the rotating element and the bearing frame (LTi)

CAUTION:
Wear insulated gloves when you use a bearing heater. Bearings get hot and can cause physical injury.

NOTICE:
Make sure that the pipe threads are clean, and that you apply thread sealant to the plugs and fittings. Failure to do so may result in equipment damage or decreased performance.

NOTICE:
Use an induction heater that heats as well as demagnetizes the bearings when you install bearings. Failure to do so may result in decreased performance.

1. Prepare the bearing frame (228) as follows (see the illustration):
a) Install the oil-fill plug (113A).
b) Install the oil-drain plug (408A).
c) Install the sight glass (319).
d) Install the sight oiler plug (408J).
e) Install the plug for the oil-cooler inlet (408L).
f) Install the plug for the oil-cooler outlet (408M).

g) Install four oil-mist connection plugs (408H).
Or: Install two grease fittings (193) and two grease-relief plugs (113).

h) Attach the bearing-frame foot (241) and fasten the bolts (370F) by hand.

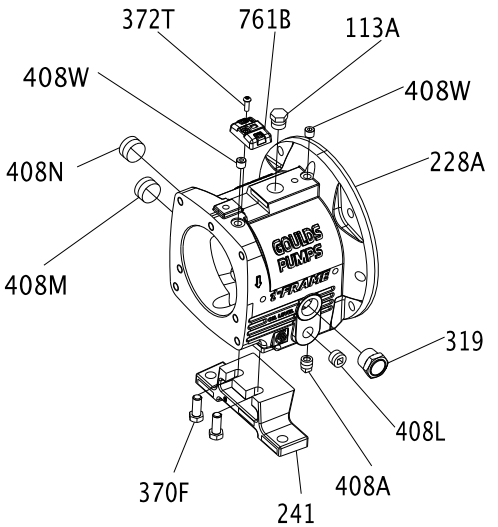

2. Install the oil flinger (248A) onto the shaft (122).

NOTICE:
The oil flinger is press fitted onto the shaft. Use a properly sized driver. Failure to do so may result in damage to the oil flinger.

3. Place the bearing-clamp ring (253B) onto the shaft (122).
Make sure that the orientation of the bearing-clamp ring is correct.
4. Install outboard bearings (112A) on shaft (122).
The regreasable bearing has a single shield. Make sure that the bearing is installed with the shield away from the impeller.
The duplex bearings are mounted back-to-back. Make sure that the orientation of the bearings are correct.
   a) Inspect the shaft (122) to ensure that it is clean, dimensionally correct, and is free of nicks and burrs.

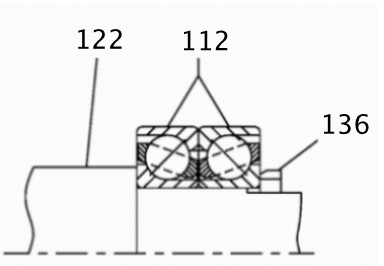

   b) Lightly coat the bearing seating with a thin film of oil.
   c) Remove the bearings (112) from their packaging.
   d) Wipe the preservative from the bearing (112) bore and outer diameter.
   e) Use an induction heater with a demagnetizing cycle to heat both bearings (112) to an inner ring temperature of 230 °F (110 °C).
   f) Place both bearings (112) on the shaft (122) with the large outer races together (back-to-back).

g) Position the bearings (112) on the shaft (122) against the shoulder and snug the locknut (136) against the bearings until they are cool.
The locknut prevents the bearings from moving away from the shaft shoulder as they cool. Rotate the outer bearing rings relative to each other as they are placed on the shaft to assure good alignment.

h) Remove the bearing locknut (136) after the bearings (112) are cool.

5. Put the lockwasher (382) onto the shaft (122).
6. Thread the locknut (136) onto the shaft (122) and tighten it until it is snug.
7. Bend the tangs of the lockwasher into the slots of the locknut.
8. Coat the inner surfaces of the bearings with lubricant.
9. Put the inboard bearing (168) onto the shaft (122).

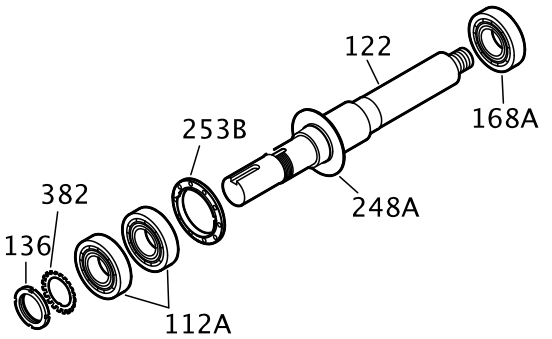

10. Install the bearing housing as follows (see the illustration):
    a) Coat the outside of the outboard bearing (112A) with oil.
    b) Coat the bore of the bearing housing (134) with oil.
    c) Put the bearing housing (134) onto the shaft.
    Do not use force.

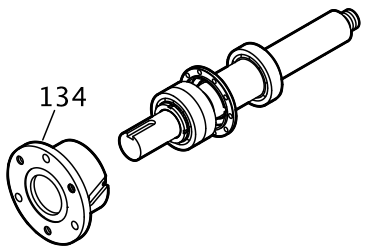

11. Prepare the shaft for assembly as follows (see the illustration):
    a) Fasten the clamp-ring bolts (236A) crosswise.
    See the specified torque values.
    Make sure that the shaft rotates freely.
    b) Install a new O-ring (496).

c) Install the outboard labyrinth oil-seal (332A) into the bearing housing (134).
Place the drain slots of the oil seal at the bottom position (6 o'clock).
Make sure that the edges of the keyway are free from burrs. To protect the O-ring, cover the keyway lengthwise with a piece of electrical tape before you install the oil seal.

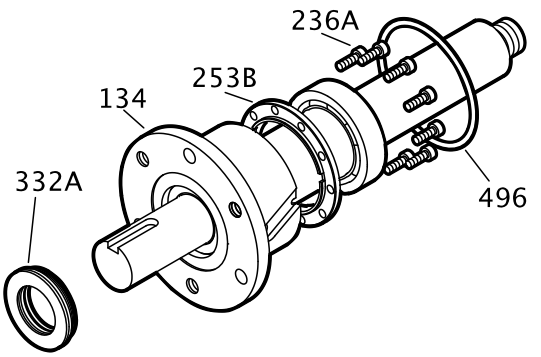

12. Install the shaft assembly into the bearing frame as follows (see the illustration):
    a) Coat the outside of the bearing housing (134) with oil.
    b) Coat all the internal surfaces of the bearing frame (228) with oil.
    c) Install the shaft assembly into the bearing frame (228).
    Make sure that the shaft rotates freely.
    d) Install the clamp bolts (370C) in the bearing housing (134) and tighten by hand.
    e) Install the jack bolts (370D) with the locknuts (423) in the bearing housing (134) and tighten by hand.

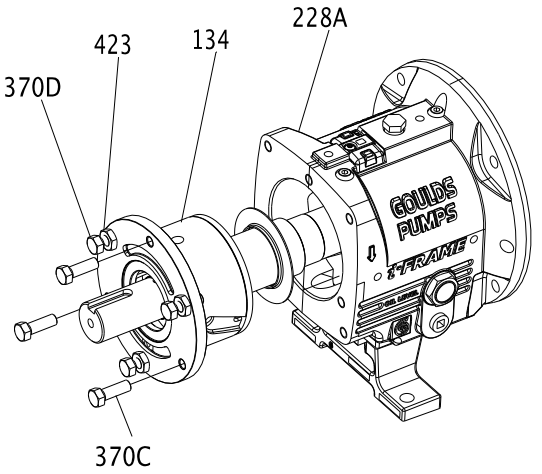

Assemble the rotating element and the bearing frame (XLT-i and i17)

CAUTION:
- Wear insulated gloves when you use a bearing heater. Bearings get hot and can cause physical injury.
- Use care when you handle the shaft because it can be heavy. Failure to do so could result in personal injury.

NOTICE:
Make sure that the pipe threads are clean, and that you apply thread sealant to the plugs and fittings. Failure to do so may result in equipment damage or decreased performance.

NOTICE:
Use an induction heater that heats as well as demagnetizes the bearings when you install bearings. Failure to do so may result in decreased performance.

1. Prepare the bearing frame (228) as follows (see the illustration):
   a) Install the oil-fill plug (113A).
   b) Install the oil-drain plug (408A).
   c) Install the sight glass (319).
   d) Install the sight oiler plug (408J).
   e) Install the plug for the oil-cooler inlet (408L).
   f) Install the plug for the oil-cooler outlet (408M).
   g) Install four oil-mist connection plugs (408H).
      Or: Install two grease fittings (193) and two grease-relief plugs (113).

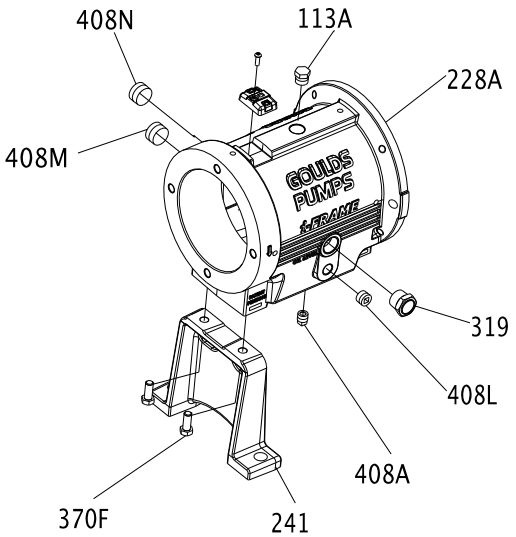

2. Install the outboard bearings (112A) on the shaft (122).
   The regreaseable bearing has a single shield. The outboard bearing is installed with the shield toward the impeller.
   a) Inspect the shaft (122) to ensure that it is clean, dimensionally correct, and is free of nicks and burrs.
   b) Lightly coat the bearing seating with a thin film of oil.
   c) Remove the bearing (112) from its packaging.
   d) Wipe the preservative from the bearing (112) bore and outer diameter.
   e) Use an induction heater with a demagnetizing cycle to heat the bearing (112) to an inner ring temperature of 230 °F (110 °C).
   f) Position the bearing (112) on the shaft (122) against the shoulder and snug the locknut (136) against the bearing until it is cool.
      The locknut prevents the bearing from moving away from the shaft shoulder as it cools.
   g) Remove the bearing locknut (136) after the bearing (112) cools.
3. Put the lockwasher (382) onto the shaft (122).
4. Thread the locknut (136) onto the shaft (122) and tighten it until it is snug.

5. Bend the tangs of the lockwasher into the slots of the locknut.

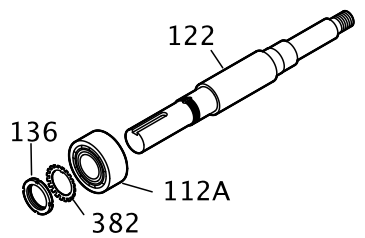

6. Install the bearing housing as follows (see the illustration):
   a) Coat the outside of the outboard bearing (112A) with oil.
   b) Coat the bore of the bearing housing (134) with oil.
   c) Put the bearing housing (134) onto the shaft.
   Do not use force.

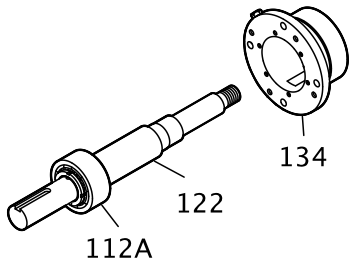

7. Fasten the gasket (360C) and the end cover (109A) with the bolts (371C).
   See the specified torque values.
   Make sure that the shaft rotates freely.

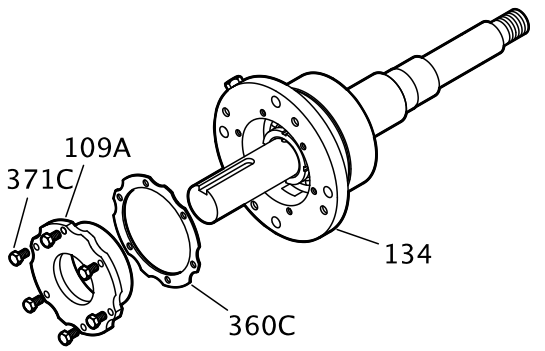

8. Install the inboard bearing as follows (see the illustration):
   a) Coat the inner surfaces of the bearings with lubricant.
   b) Put the inboard bearing (168) onto the shaft (122).
   The regreasable bearing has a single shield. Make sure that the bearing is installed with the shield away from the impeller.

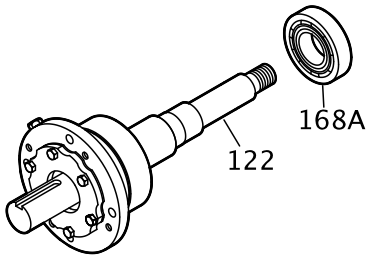

9. Install the remaining parts onto the bearing shaft as follows (see the illustration):
   a) Install a new O-ring (496).
   b) Install the outboard labyrinth oil-seal (332A) into the end cover (109A).
      Place the drain slots of the oil seal at the bottom position (6 o'clock).
      Make sure that the edges of the keyway are free from burrs. To protect the O-ring, cover the keyway lengthwise with a piece of electrical tape before you install the oil seal.

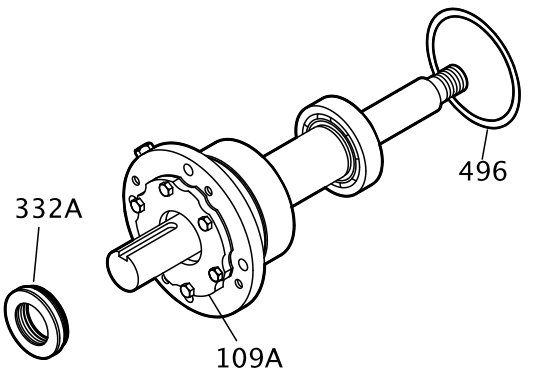

10. Install the shaft assembly into the bearing frame as follows (see the illustration):
    a) Coat the outside of the bearing housing (134) with oil.
    b) Coat all the internal surfaces of the bearing frame (228) with oil.
    c) Install the shaft assembly into the bearing frame (228).
       Make sure that the shaft rotates freely.
    d) Install the clamp bolts (370C) in the bearing housing (134) and tighten by hand.
    e) Install the jack bolts (370D) with the locknuts (423) in the bearing housing (134) and tighten by hand.
    f) Attach the bearing-frame foot (241) and fasten the bolts (370F) by hand.

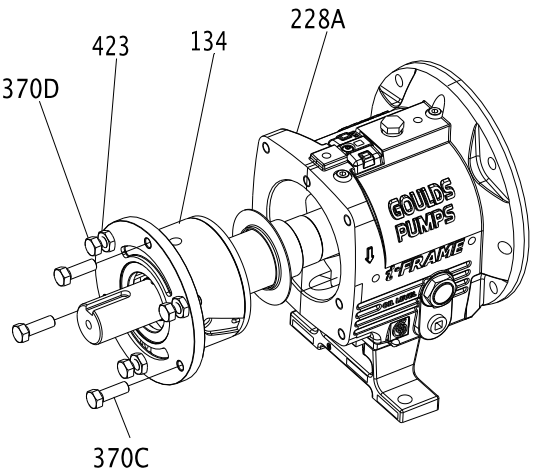

Assemble the rotating element and the bearing frame (XLT-i and i17 with duplex bearings)

CAUTION:
- Wear insulated gloves when you use a bearing heater. Bearings get hot and can cause physical injury.
- Use care when you handle the shaft because it can be heavy. Failure to do so could result in personal injury.

NOTICE:
Make sure that the pipe threads are clean, and that you apply thread sealant to the plugs and fittings. Failure to do so may result in equipment damage or decreased performance.

NOTICE:
Use an induction heater that heats as well as demagnetizes the bearings when you install bearings. Failure to do so may result in decreased performance.

1. Prepare the bearing frame (228) as follows (see the illustration):
   a) Install the oil-fill plug (113A).
   b) Install the oil-drain plug (408A).
   c) Install the sight glass (319).
   d) Install the sight oiler plug (408J).
   e) Install the plug for the oil-cooler inlet (408L).
   f) Install the plug for the oil-cooler outlet (408M).
   g) Install four oil-mist connection plugs (408H).
      Or: Install two grease fittings (193) and two grease-relief plugs (113).

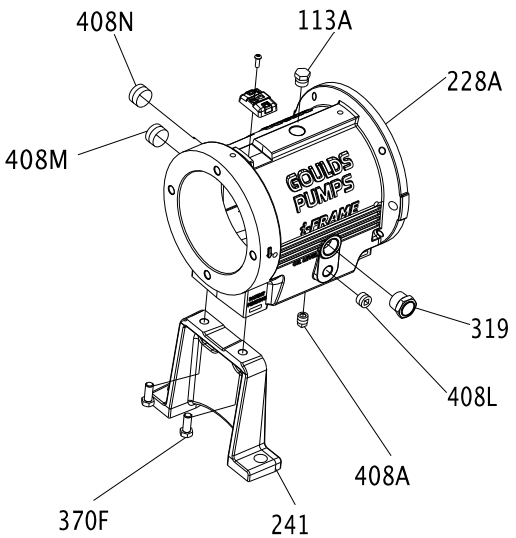

2. Install the outboard bearings (112A) on the shaft (122).
   The regreasable bearing has a single shield. Make sure that the bearing is installed with the shield away from the impeller.
   The duplex bearings are mounted back-to-back. Make sure that the orientation of the bearings are correct.
   a) Inspect the shaft (122) to ensure that it is clean, dimensionally correct, and is free of nicks and burrs.

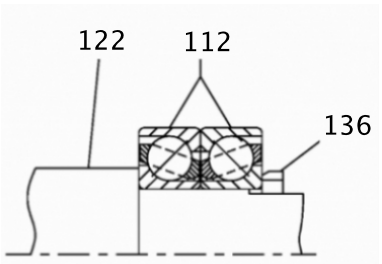

   b) Lightly coat the bearing seating with a thin film of oil.

c) Remove the bearings (112) from their packaging.
d) Wipe the preservative from the bearing (112) bore and outer diameter.
e) Use an induction heater with a demagnetizing cycle to heat both bearings (112) to an inner ring temperature of 230 °F (110 °C).
f) Place both bearings (112) on the shaft (122) with the large outer races together (back-to-back).
g) Position the bearings (112) on the shaft (122) against the shoulder and snug the locknut (136) against the bearings until they are cool.
The locknut prevents the bearings from moving away from the shaft shoulder as they cool. Rotate the outer bearing rings relative to each other as they are placed on the shaft to assure good alignment.
h) Remove the bearing locknut (136) after the bearings (112) are cool.

3. Put the lockwasher (382) onto the shaft (122).
4. Thread the locknut (136) onto the shaft (122) and tighten it until it is snug.
5. Bend the tangs of the lockwasher into the slots of the locknut.

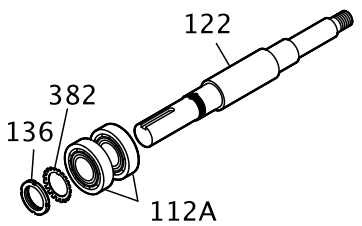

6. Install the bearing housing as follows (see the illustration):
a) Coat the outside of the outboard bearing (112A) with oil.
b) Coat the bore of the bearing housing (134) with oil.
c) Put the bearing housing (134) onto the shaft.
Do not use force.

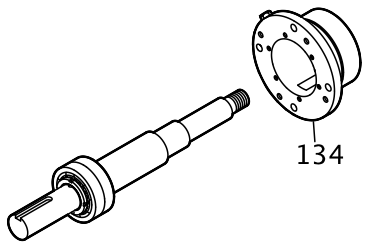

7. Fasten the gasket (360C) and the end cover (109A) with the bolts (371C).
See the specified torque values.
Make sure that the shaft rotates freely.

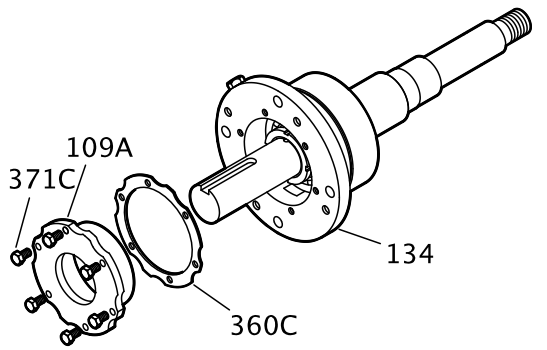

8. Install the inboard bearing as follows (see the illustration):

a) Coat the inner surfaces of the bearings with lubricant.
b) Put the inboard bearing (168) onto the shaft (122).
The regreasable bearing has a single shield. Make sure that the bearing is installed with the shield away from the impeller.

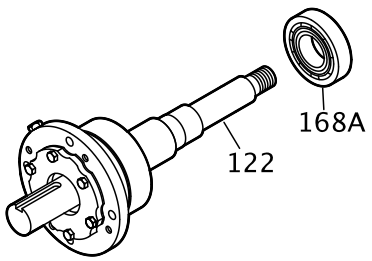

9. Install the remaining parts onto the bearing shaft as follows (see the illustration):
a) Install a new O-ring (496).
b) Install the outboard labyrinth oil-seal (332A) into the end cover (109A).
Place the drain slots of the oil seal at the bottom position (6 o'clock).
Make sure that the edges of the keyway are free from burrs. To protect the O-ring, cover the keyway lengthwise with a piece of electrical tape before you install the oil seal.

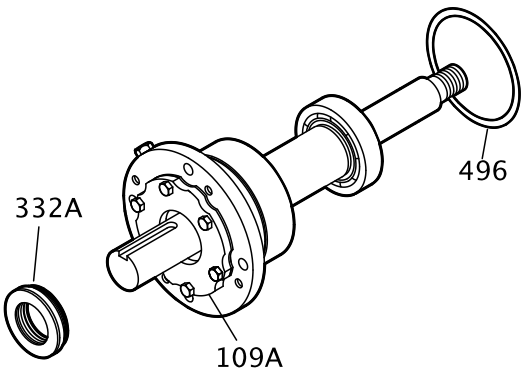

10. Install the shaft assembly into the bearing frame as follows (see the illustration):
a) Coat the outside of the bearing housing (134) with oil.
b) Coat all the internal surfaces of the bearing frame (228) with oil.
c) Install the shaft assembly into the bearing frame (228).
Make sure that the shaft rotates freely.
d) Install the clamp bolts (370C) in the bearing housing (134) and tighten by hand.
e) Install the jack bolts (370D) with the locknuts (423) in the bearing housing (134) and tighten by hand.

f) Attach the bearing-frame foot (241) and fasten the bolts (370F) by hand.

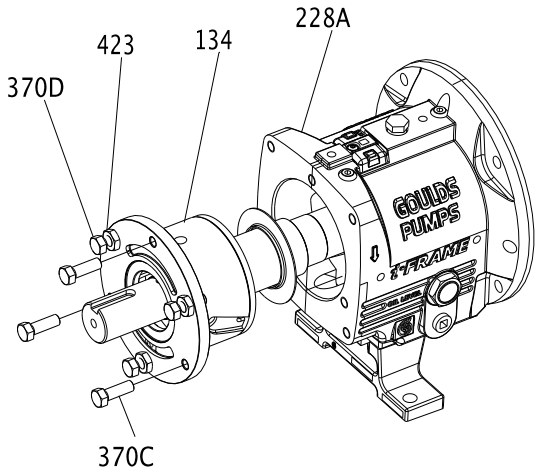

Assemble the frame

1. Support the frame assembly in a horizontal position.
2. Check the shaft-end play by moving the shaft forward and backward by hand, and note any indicator movement.
   If the total indicator reading is greater than the values in this table, then disassemble the shaft and determine the cause.

Table 15: Shaft-end play

Use this table as a reference for shaft-end play values.

Frame	Double row bearing	Duplex bearing
STi inches (millimeters)	0.0011 (0.028) 0.0019 (0.048)	0.0007 (0.018) 0.0010 (0.025)
MTi inches (millimeters)	0.0013 (0.033) 0.0021 (0.053)	0.0009 (0.023) 0.0012 (0.030)
LTi inches (millimeters)	Not applicable	0.0010 (0.025) 0.0015 (0.038)
XLT-i inches (millimeters)	0.0014 (0.036) 0.0023 (0.058)	0.0010 (0.025) 0.0015 (0.038)

Frame	Double row bearing	Duplex bearing

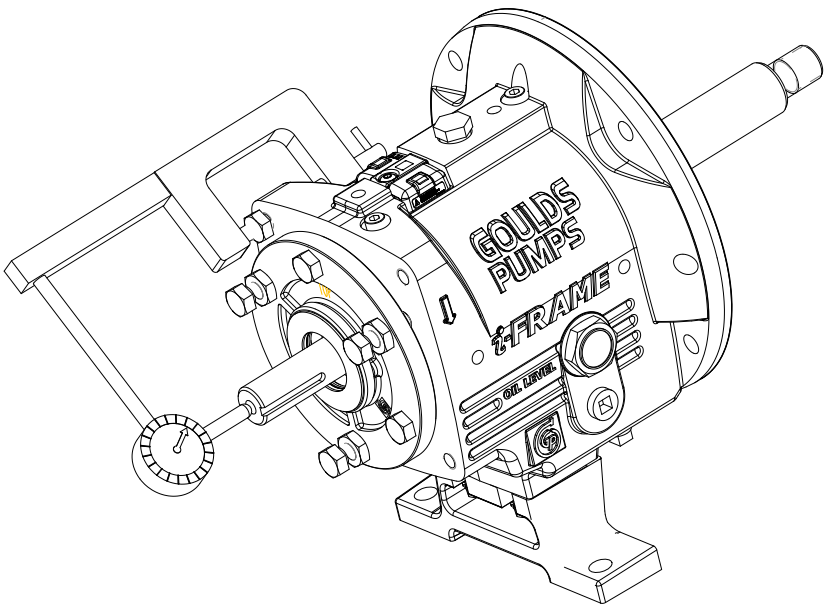

3. Check the shaft-sleeve (126) runout.
   a) Install the shaft sleeve.
   b) Thread the impeller on the shaft until hand tight.
   c) Rotate the shaft 360º.
   d) If the total indicator reading is greater than 0.002 in. (0.051 mm), then disassemble the shaft sleeve and determine the cause.
   e) Remove the impeller and shaft sleeve.

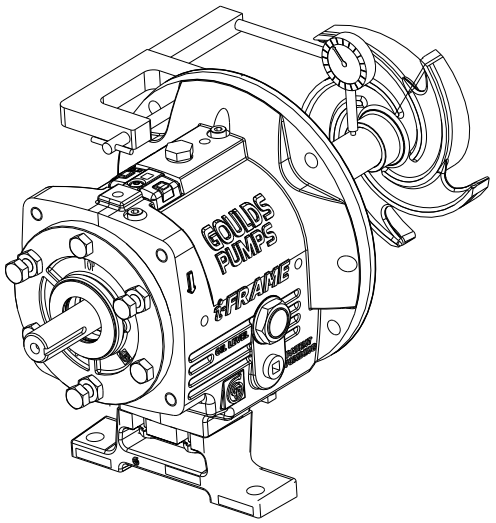

4. Check the frame-face runout by rotating the shaft so that the indicator measures the fit for 360º.
   If the total indicator reading is greater than 0.001 in. (0.025 mm), then disassemble and determine the cause.

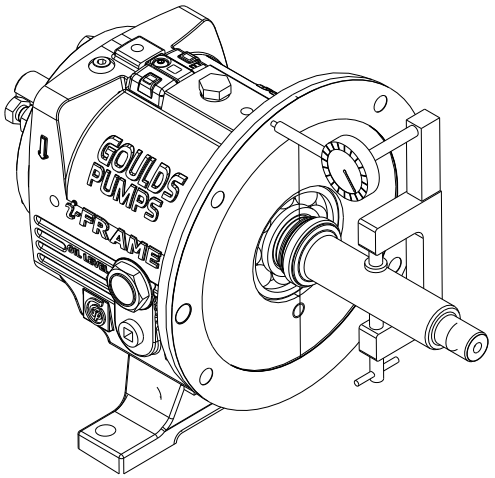

5. Place the manila gasket (360D) on the frame (228), and hold the gasket in place by inserting the dowel pins (469B) in their holes.
   The gasket is designed to fit only one way.
6. Install the frame adapter.
   a) Place the frame adapter (108) onto the frame assembly.
   b) Align the bolt holes and dowel locations on the frame adapter with the bolt holes and dowel locations on the frame.

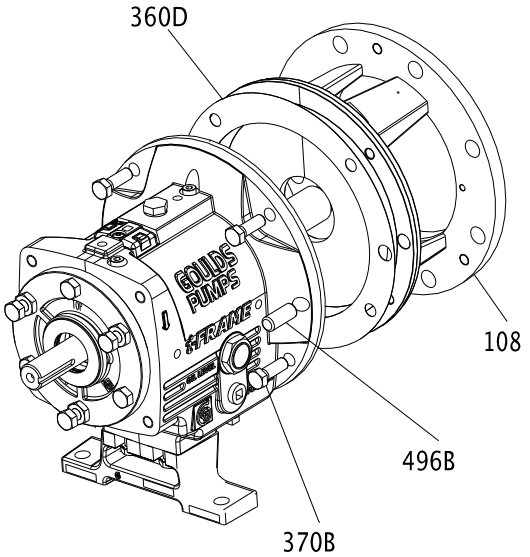

   c) Install the dowel pins (469B) and bolts (370B). Tighten the bolts in a criss-cross pattern according to the specifications in the bolt torque values table.

d) Rotate the shaft 360º to check the adapter fit.
If the total indicator reading is greater than 0.005 in. (0.13 mm), then determine the cause and correct it before you proceed.

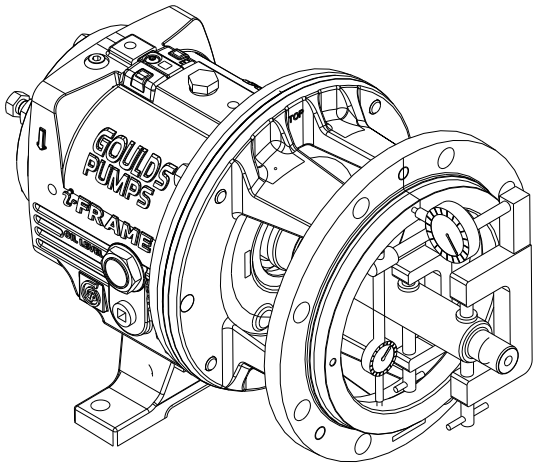

7. Install the labyrinth oil-seal (333A) into the adapter (108) and the bearing frame (228).
The labyrinth oil seal is an O-ring fit.
8. Position the labyrinth oil-seal drain slots at the bottom (6 o'clock) position.
Refer to Assemble the INPRO labyrinth oil-seal for more information on the labyrinth oil-seal installation.

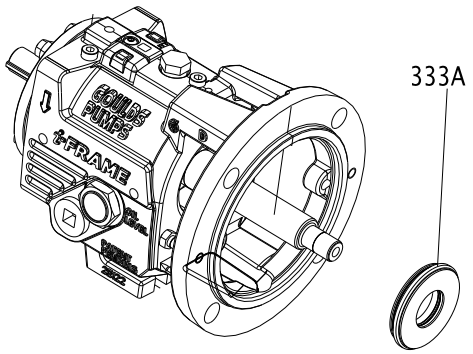

INPRO labyrinth oil seal description

Description

The INPRO VBXX-D Labyrinth Oil Seal consists of the rotor (1), the stator (2), and the VBX Ring (3). The rotor (1) fits over the shaft and is held in place by an elastomeric drive ring (4). The drive ring causes the rotor to turn with the shaft and provides a positive, static seal against the shaft. Since there is no metal-to-metal contact, there are no friction or wear concerns.

NOTICE:
The INPRO VBX is a one-piece design. Do not attempt to separate the rotor from the stator before or during installation. Doing so may result in equipment damage.

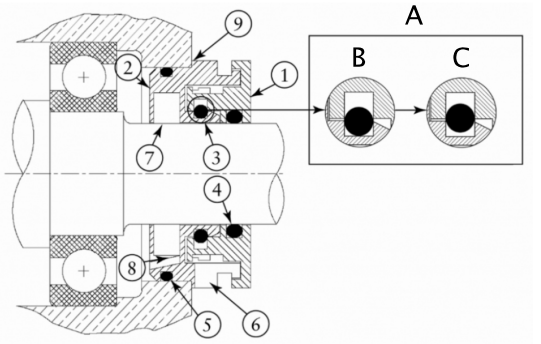

A	"VBX" O-ring action
B	Static
C	Dynamic
1	Rotor
2	Stator
3	"VBX" ring
4	Rotor drive ring
5	Stator gasket
6	Expulsion port
7	D groove
8	Lube return
9	Location shoulder

Assemble the INPRO labyrinth oil seal

1. Wrap electrical tape around the coupling end of the shaft to cover the keyway.

   NOTICE:
   The edges of the keyway can be sharp. Make sure to cover the keyway with tape. Failure to do so may result in cutting the O-ring and damaging the seal.

2. Lightly lube the shaft and the drive ring (4) with lubricant.
   Lubricant helps in the installation process. Be sure that the lubricant is compatible with the O-ring material and the pump-system standards.
3. Use an arbor press to install the outboard INPRO VBXX-D into the bearing cover with the expulsion port (6) at the 6 o'clock position.
   Press the outboard INPRO VBXX-D down to where the stator location ramp (9) starts to avoid angular misalignment. There is a nominal 0.002 in. (0.051 mm) interference fit.
4. Discard any residual material from the stator gasket (5).
5. Complete the applicable step in this table depending on the model of your pump.

Pump model	Action
STi	Press the inboard seal along the shaft into the bearing frame.
All other models	After you install the frame adapter on the bearing frame, press the inboard seal over the shaft and into the adapter.

Assemble the C-face adapter

1. Mount the pump and the motor-coupling hubs if they are not already mounted.
2. Slide the C-face adapter over the pump shaft and mount it against the bearing-frame flange using four bolts.
3. Mount the motor to the C-face adapter using either four or eight motor bolts.

Table 16: Motor-bolt torque values for C-face adapter to frame

This table contains the motor-bolt torque values for assembling the C-face adapter to a frame.

Frame	Lubricated threads	Dry threads
STi	20 ft-lb (27 Nm)	30 ft-lb (41 Nm)
MTi	20 ft-lb (27 Nm)	30 ft-lb (41 Nm)
LTi	20 ft-lb (27 Nm)	30 ft-lb (41 Nm)

Table 17: Motor-bolt torque values for C-face adapter to motor

This table contains the motor-bolt torque values for assembling the C-face adapter to a motor.

Frame	Lubricated threads	Dry threads
143TC-145TC	8 ft-lb (11 Nm)	12 ft-lb (16 Nm)
182TC-286TC	20 ft-lb (27 Nm)	30 ft-lb (41 Nm)
324TC-365TC	39 ft-lb (53 Nm)	59 ft-lb (80 Nm)

Shaft sealing

WARNING:
The mechanical seal used in an Ex-classified environment must be properly certified. Prior to startup, make sure that all areas that could leak pumped fluid to the work environment are closed.

NOTICE:
The mechanical seal must have an appropriate seal-flush system. Otherwise, excess heat generation and seal failure can occur.

Methods for sealing the shaft

These sections discuss the methods that you can use to seal the shaft.

- Seal the shaft with a dynamic seal.
- Seal the shaft with a cartridge-mechanical seal.
- Seal the shaft with a conventional inside-component mechanical seal.
- Seal the shaft with a conventional outside-component mechanical seal.
- Seal the shaft with a packed stuffing box.

Seal the shaft with a dynamic seal

1. Place the backplate (444) with the flat side down on the bench.

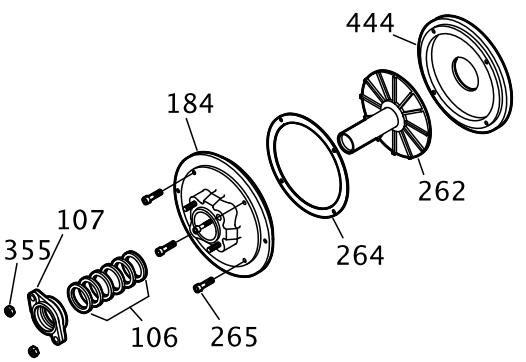

2. Place the repeller (262) in the backplate (444) with the sleeve side up.
3. Place a Teflon gasket (264) on the backplate (444) and align the holes in the gasket with the holes in the backplate.
4. Place a stuffing-box cover (184) on the backplate (444) and align the holes in the gasket with the holes in the backplate.
5. Install four socket-head capscrews (265) and tighten them securely.
6. Install a new sealing element into the gland.

7. Install a gasket (360Q) and gland (107) on the stuffing-box cover (184).
8. Install the nuts (355).
9. Install a dynamic-seal assembly and nuts (370H).

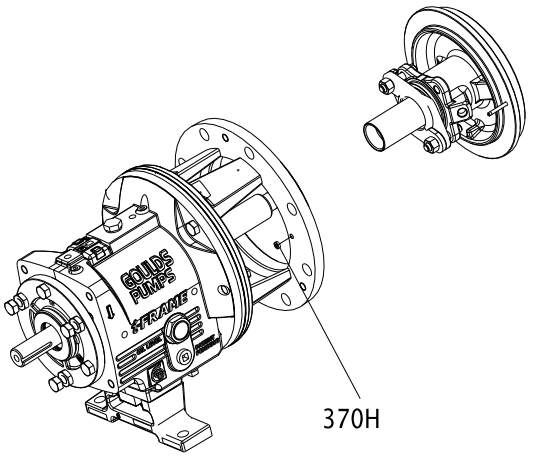

10. Check the stuffing-box-cover runout and rotate the indicator through 360 degrees. An indicator reading that is greater than 0.005 in. (0.013 mm) indicates a problem.

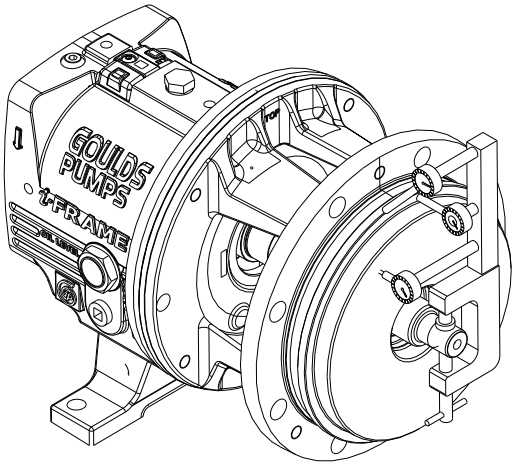

Seal the shaft with a packed stuffing box

WARNING:
Packed stuffing boxes are not allowed in an ATEX-classified environment.

Pumps are shipped without the packing, lantern ring, or split gland installed. These parts are included with the box of fittings shipped with each pump and must be installed before startup.

1. Carefully clean the stuffing-box bore.

2. Twist the packing enough to get it around the shaft.

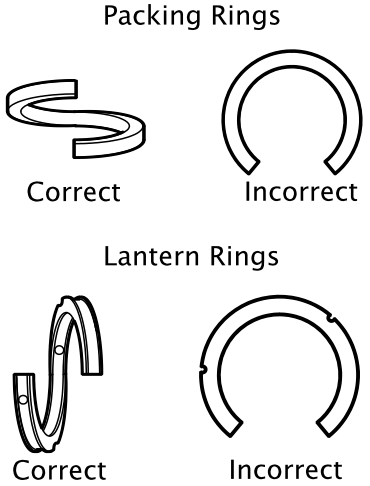

3. Insert the packing and stagger the joints in each ring by 90°.
   Install the stuffing-box parts in this order:
   a) Two packing rings
   b) One lantern ring (two-piece)
   c) Three packing rings

NOTICE:
Make sure that the lantern ring is located at the flushing connection to ensure that flush is obtained. Failure to do so may result in decreased performance.

4. Install the gland halves and evenly hand-tighten the nuts.

Seal the shaft with a cartridge mechanical seal

WARNING:
The mechanical seal used in an Ex-classified environment must be properly certified. Prior to startup, make sure that all areas that could leak pumped fluid to the work environment are closed.

NOTICE:
The mechanical seal must have an appropriate seal-flush system. Otherwise, excess heat generation and seal failure can occur.

1. Slide the cartridge seal onto the shaft or sleeve until it contacts the inboard labyrinth oil seal.
2. Assemble the seal chamber.
3. Slide the cartridge seal into the seal chamber and secure using the four studs and nuts.
4. Continue with the pump reassembly.
5. Set the impeller clearance.
   Refer to the Impeller clearance setting topic for more information.
6. Tighten the setscrews in the seal locking ring in order to secure the seal to the shaft.
7. Remove the centering clips from the seal.

Seal the shaft with a conventional inside-component mechanical seal

WARNING:
The mechanical seal used in an Ex-classified environment must be properly certified. Prior to startup, make sure that all areas that could leak pumped fluid to the work environment are closed.

NOTICE:
The mechanical seal must have an appropriate seal-flush system. Otherwise, excess heat generation and seal failure can occur.

1. Assemble the seal chamber:
   a) Install a seal-chamber cover or a backplate (184) and fasten with nuts (370H) with .

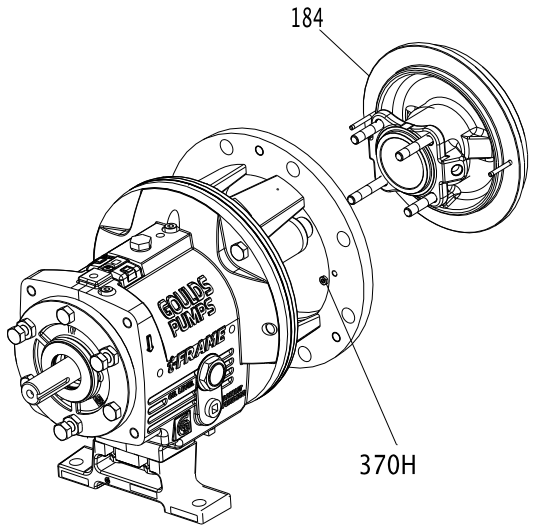

   b) Check the seal-chamber cover runout.

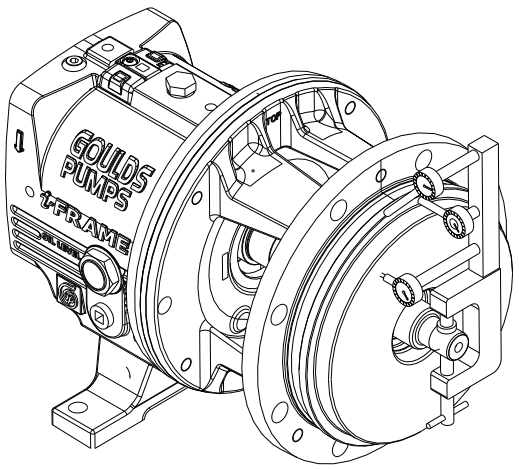

Rotate the indicator through 360º. If the total indicator reading is greater than 0.005 inches (0.13 mm), determine the cause and correct the issue before you proceed.

c) Install the shaft sleeve (126).

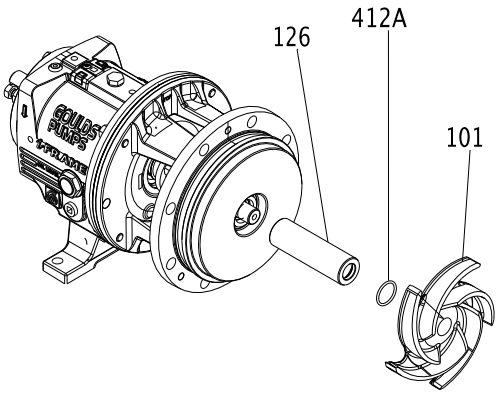

2. Mark the shaft and sleeve at the face of the seal chamber.
3. Continue the complete reassembly of the pump, except for the mechanical seal.
4. Set the impeller clearance.
   Refer to the Impeller Clearance Setting section for more information.
5. Scribe a line on the marked shaft and sleeve at the face of the seal chamber.
6. Remove the casing, the impeller, and the seal chamber.
7. If applicable, slide the gland, with the stationary seat and gland gasket installed, onto the shaft until it contacts the inboard labyrinth oil seal.
8. Install the mechanical-seal rotary unit according to the manufacturer's instructions.
   Use the scribed line and the seal-reference dimension.
9. Reinstall the seal chamber.
10. Slide the gland on the seal-chamber studs and secure them with the gland nuts.
    Tighten the nuts evenly so that the gland is seated on the seal-chamber pilot and is perpendicular to the shaft.
11. Complete the reassembly of the pump.

Seal the shaft with a conventional outside-component mechanical seal

WARNING:
The mechanical seal used in an Ex-classified environment must be properly certified. Prior to startup, make sure that all areas that could leak pumped fluid to the work environment are closed.

NOTICE:
The mechanical seal must have an appropriate seal-flush system. Otherwise, excess heat generation and seal failure can occur.

1. Assemble the seal chamber.

a) Install the seal-chamber cover or backplate (184) and fasten with nuts (370H).

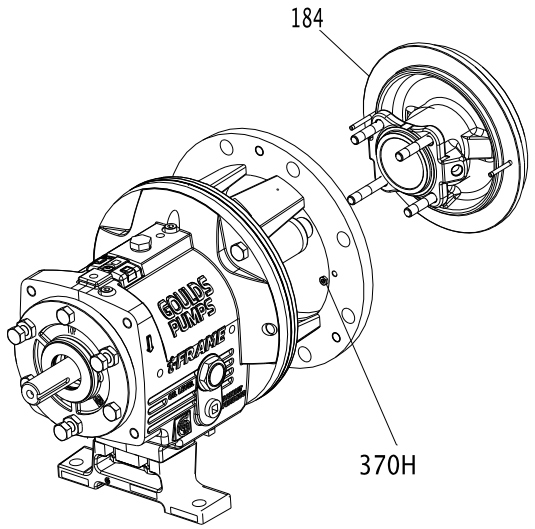

b) Check the seal-chamber cover runout.

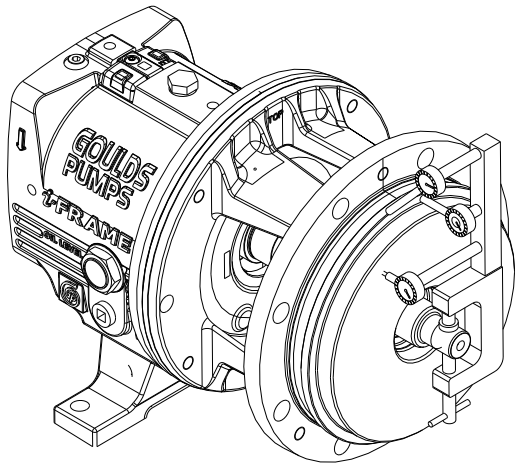

Rotate the indicator through 360 degrees. If the total indicator reading is greater than 0.005 in. (0.13 mm), determine the cause and correct the issue before you proceed.

c) Install the shaft sleeve (126).

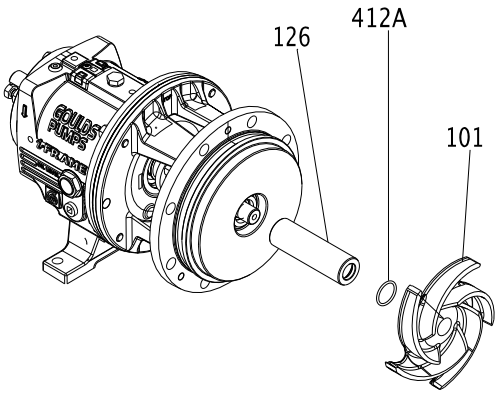

2. Mark the shaft and sleeve at the face of the seal chamber.
3. Continue the complete reassembly of the pump, except for the mechanical seal.
4. Set the impeller clearance.
   Refer to the Impeller clearance setting section for more information.
5. Scribe a line on the marked shaft and sleeve at the face of the seal chamber.
6. Remove the casing, the impeller, and the seal chamber.
7. Install the mechanical-seal rotary unit per the manufacturer's instructions.
   Use the scribed line as the seal-reference dimension. Be sure to secure the rotary unit in place using the set screws in the locking ring.
8. Install the gland, with the stationary seat and gland gaskets installed, on the seal chamber.
9. Reinstall the seal chamber.
10. Complete the reassembly of the pump.

Install the impeller

CAUTION:
Wear heavy work gloves when you handle impellers. The sharp edges can cause physical injury.

1. Install the impeller.

Pump size	Action
STi, MTi, and LTi	Install the impeller (101). Use a new impeller O-ring (412A).
XLT-i and i17	Install the impeller (101) and a Teflon washer (428D) on the plug (458Y). Use a new impeller O-ring (412A).

2. Attach a shaft wrench and a coupling key on the shaft.
   a) When the impeller (101) makes firm contact with the sleeve (126), raise the shaft wrench (counterclockwise, viewed from the impeller end of the shaft) off of the bench and slam it down (clockwise, viewed from the impeller end of shaft).

b) Apply a few sharp raps to tighten the impeller (101).

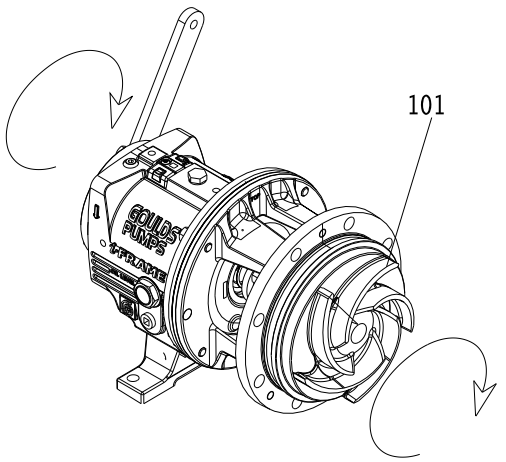

3. Loosen the clamp bolts (370C) and the jack bolts (370D).
4. Measure the gap between the impeller (101) and the seal chamber and stuffing-box cover (184) with a feeler gauge.

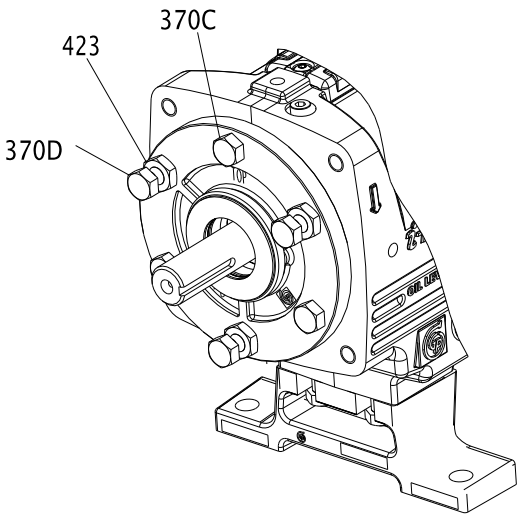

5. When you reach a 0.030 in. (0.76 mm) clearance, tighten the clamp bolts (370C), jack bolts (370D), and lock nuts (423).
   This approximates the impeller position when it is set to 0.015 in. (0.38 mm) from the casing. Perform a final impeller adjustment after you install the impeller into the casing.
6. Check the impeller (101) runout.

Check vane tip to vane tip. If the total indicator reading is greater than 0.005 in. (0.13 mm), determine the cause and correct the issue before you proceed.

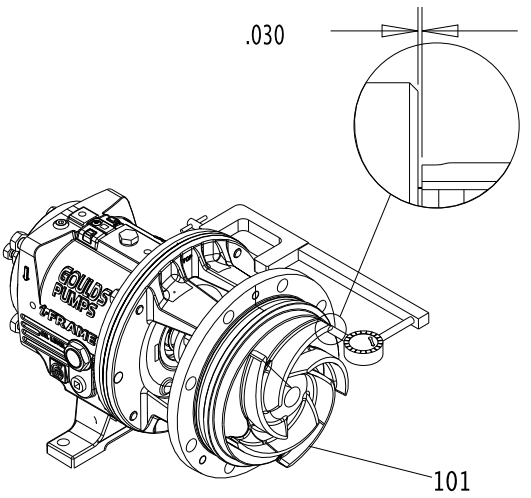

For more information on how to set the impeller clearances, refer to the Impeller-clearance checks and Impeller-clearance setting sections in Commissioning, Startup, Operation, and Shutdown.

Attach the i-ALERT™ Condition Monitor to the pump

CAUTION:
Always wear protective gloves. The pump and condition monitor can be hot.

Tools required:

- 5/32 inch hex wrench

1. Attach the condition monitor (761B) to the bearing frame (228A) using the hex-head screw (372T) provided.

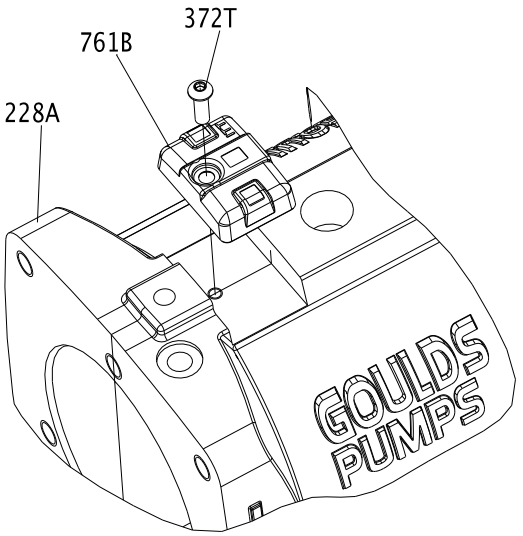

2. Tighten the hex-head screw with a 5/32 inch hex wrench to 6 ft-lbs (8 Nm).

Post-assembly checks

Perform these checks after you assemble the pump, then continue with pump startup:

- Rotate the shaft by hand in order to make sure that it rotates easily and smoothly and that there is no rubbing.
- Open the isolation valves and check the pump for leaks.

Install the back pull-out assembly (except HT 3196)

CAUTION:
Never remove the back pull-out assembly without assistance.

1. Clean the casing fit and install the casing gasket (351) on the seal chamber and stuffing-box cover.
2. Loosen the clamping bolts (370C) and jack bolts (370D) on the bearing housing.

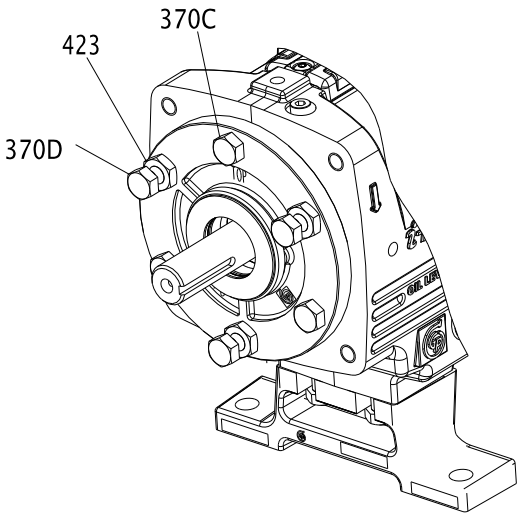

3. Install the back pull-out assembly in the casing.

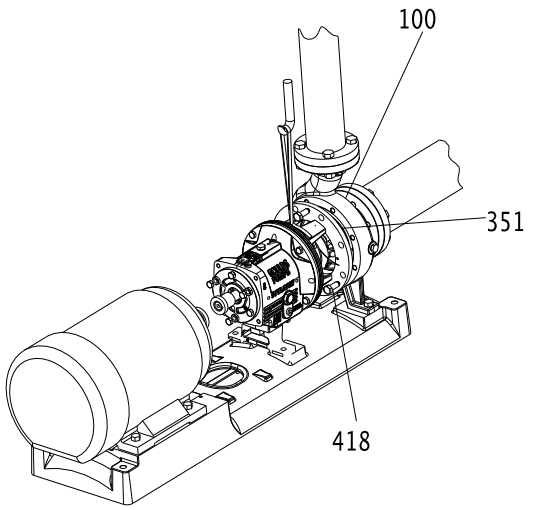

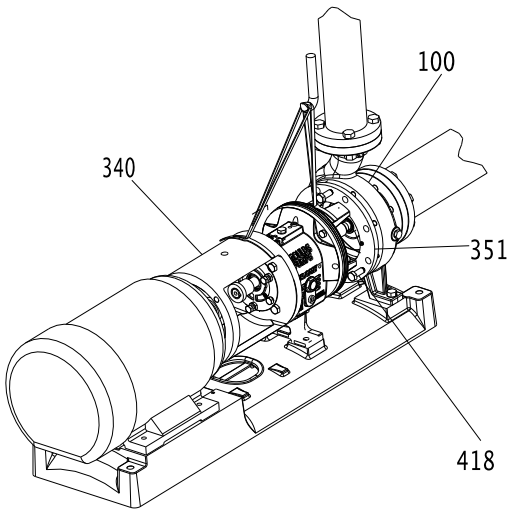

4. Install and then hand-tighten the casing bolts (370).
   Refer to the bolt torque values for information on how to tighten the casing bolts.
5. Install and tighten the casing jackscrews (418).

NOTICE:
Do not overtighten the casing jackscrews. Doing so may result in equipment damage.

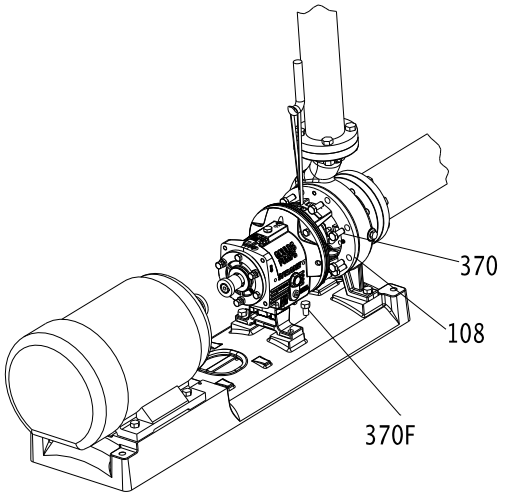

6. Reinstall the shims under the frame foot and tighten the frame foot to the baseplate.
   Make sure that you use the proper shim. Mount a dial indicator in order to measure the distance between the top of the frame and the baseplate. Make sure that the distance does not change as you tighten the frame-foot bolts.
7. Check the total clearance of the impeller in the casing.
   With new parts, an acceptable range is 0.030 in. (0.76 mm) to 0.065 in. (1.65 mm). If the impeller clearance is outside of this range, you either have the incorrect parts, an improper installation, or too much pipe strain. Determine the cause and correct the problem before you proceed.
8. Adjust the impeller clearance.
   Refer to the Impeller clearance setting section for more information.
9. Replace the auxiliary piping.
10. Fill the pump with the proper lubricant. See Lubricating-oil requirements.
11. Reinstall the coupling guard.

See Install the coupling guard for more information.

NOTICE:
Risk of damage to the mechanical seal or shaft sleeve on units supplied with cartridge mechanical seals. Prior to startup, make sure to tighten the set screws in the seal locking ring and remove the centering clips.

Assembly references

Bolt torque values

Table 18: Bolt torque, lb-ft (Nm)

This table provides the bolt torque values.

Location	Frame	3196, CV 3196, LF 3196, 3796		NM 3196		3198	
		Lube	Dry	Lube	Dry	Lube	Dry
Casing bolts (370) or casing nuts (425)	6-in. STi	Refer to the maximum torque values in lb-ft (Nm) for casing bolts table.		27 (36)	40 (53)	N/A	N/A
	8-in. STi			20 (27)	30 (40)	35 (47)	53 (71)
	MTi, LTi			27 (36)	40 (53)	35 (47)	53 (71)
	XLT-i, i17			N/A	N/A	N/A	N/A
Frame-to-adapter bolts	All	20 (27)	30 (40)	20 (27)	30 (40)	20 (27)	30 (40)
Bearing-clamp ring bolts (236A) - duplex bearing only	STi, MTi	10* (1.1)	17* (1.9)	10* (1.1)	17* (1.9)	10* (1.1)	17* (1.9)
	LTi	55* (6.2)	83* (9.4)	55* (6.2)	83* (9.4)	55* (6.2)	83* (9.4)
Bearing end cover bolts (371C)	XLT-i, i17	9 (12)	12 (16)	N/A	N/A	N/A	N/A
Dynamic seal cap-screws (265)	STi, MTi, LTi	55* (6.2)	83* (9.4)	N/A	N/A	N/A	N/A
	XLT-i, i17	9 (12)	12 (16)	N/A	N/A	N/A	N/A
* Values are in lb-in. (Nm)							

Table 19: Maximum torque values in lb-ft (Nm) for casing bolts

This table provides the maximum torque values for casing bolts.

		Models 3196, CV 3196 LF 3196, 3796 with 150 lb (68 kg) casing flanges				Model HT 3196 and all models with 300 lb (136 kg) casing flanges	
		Material specification					
		Ductile iron casing with A307 Grade B casing bolts		Alloy casing with (304SS) F593 Grade 1 or (316SS F593) Grade 2 casing bolts		Ductile iron and alloy casings with A193 grade B7 casing bolts	
Frame	Casing bolt diameter (in.)	Lube	Dry	Lube	Dry	Lube	Dry
8 in. STi	0.50	20 (27)	30 (41)	35 (47)	54 (73)	58 (79)	87 (118)
6 in. STi	0.625	39 (53)	59 (80)	71 (96)	107 (145)	115 (156)	173 (235)
MTi	0.625	39 (53)	59 (80)	71 (96)	107 (145)	115 (156)	173 (235)
LTi	0.625	39 (53)	59 (80)	71 (96)	107 (145)	115 (156)	173 (235)
XLT-i	0.625	39 (53)	59 (80)	71 (96)	107 (145)	115 (156)	173 (235)
i17	7/8	113 (153)	170 (230)	141 (191)	212 (287)	330 (447)	495 (671)

Shaft-end play

Table 20: Shaft-end play

Use this table as a reference for shaft-end play values.

Frame	Double row bearing	Duplex bearing
STi inches (millimeters)	0.0011 (0.028) 0.0019 (0.048)	0.0007 (0.018) 0.0010 (0.025)
MTi inches (millimeters)	0.0013 (0.033) 0.0021 (0.053)	0.0009 (0.023) 0.0012 (0.030)

Frame	Double row bearing	Duplex bearing
LTi inches (millimeters)	Not applicable	0.0010 (0.025) 0.0015 (0.038)
XLT-i inches (millimeters)	0.0014 (0.036) 0.0023 (0.058)	0.0010 (0.025) 0.0015 (0.038)

Bearing types

Table 21: Bearing types

Frame Double row	Inboard bearing Duplex	Outboard bearing	
STi	6207	3306	7306
MTi	6309	3309	7309
LTi	6311	Not applicable	7310
XLT-i, i17	6313	3313	7313

Spare parts

Always state the serial number and indicate the part name and item number from the relevant sectional drawing when you order spare parts. It is imperative for service reliability to have a sufficient stock of readily available spare parts.

- Impeller (101)
- Shaft (122A)
- Shaft sleeve (126)
- Outboard bearing (112A)
- Inboard bearing (168A)
- Casing gasket (351)
- Frame-to-adapter gasket (360D)
- Bearing-housing retaining ring (361A)
- Bearing lockwasher (382)
- Bearing locknut (136)
- Impeller O-ring (412A)
- Bearing-housing O-ring (496)
- Outboard labyrinth-seal rotary O-ring (497F)
- Outboard labyrinth-seal stationary O-ring (497G)
- Inboard labyrinth-seal rotary O-ring (497H)
- Inboard labyrinth-seal stationary O-ring (497J)
- Lantern ring half (105) (packed stuffing box)
- Stuffing box packing (106) (packed stuffing box)
- Packing gland (107) (packed stuffing box)
- Impeller gasket (428D) (XLT-i and i17 only)

Interchangeability drawings

3196 interchangeability

Table 22: 3196 interchangeability drawing

Description	Shaft and Bearing Frame Assembly	Adapter	Seal Chamber	Impeller	Casing	Size
Model 3196 STi 1–3/8 in. Shaft Dia. Max BHP-40 HP	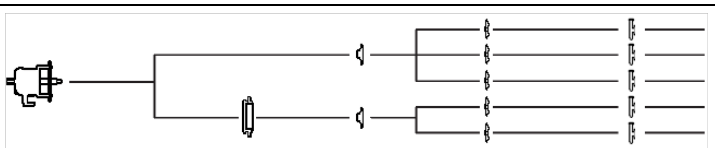					1x1.5-6 A 1.5x3-6 A 2x3-6 AC 1X1.5-8 A 1.5X3-8 A

Description	Shaft and Bearing Frame Assembly	Adapter	Seal Chamber	Impeller	Casing	Size
Model 3196 MTi 1–3/4 in. Shaft Dia. Max BHP-122 HP	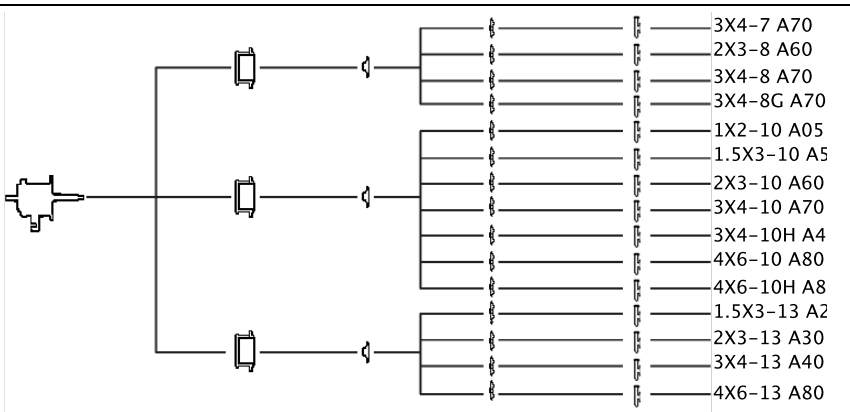					3X4-7 A70 2X3-8 A60 3X4-8 A70 3X4-8G A70 1X2-10 A05 1.5X3-10 A5 2X3-10 A60 3X4-10 A70 3X4-10H A4 4X6-10 A80 4X6-10H A8 1.5X3-13 A2 2X3-13 A30 3X4-13 A40 4X6-13 A80
Model 3196 LTi 2–1/8 in. Shaft Dia. Max BHP-200 HP	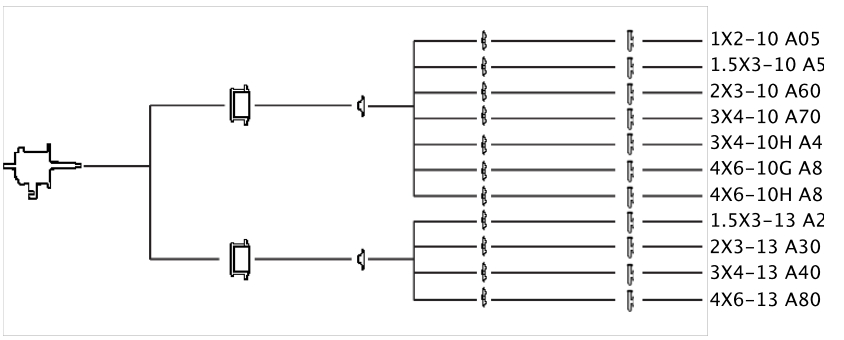					1X2-10 A05 1.5X3-10 A5 2X3-10 A60 3X4-10 A70 3X4-10H A4 4X6-10G A8 4X6-10H A8 1.5X3-13 A2 2X3-13 A30 3X4-13 A40 4X6-13 A80
Model 3196 XLT-i 2–1/2 in. Shaft Dia. Max BHP-250 HP 17 in. XLT-i has 2–3/4 in. Shaft Dia. Max BHP-350 HP	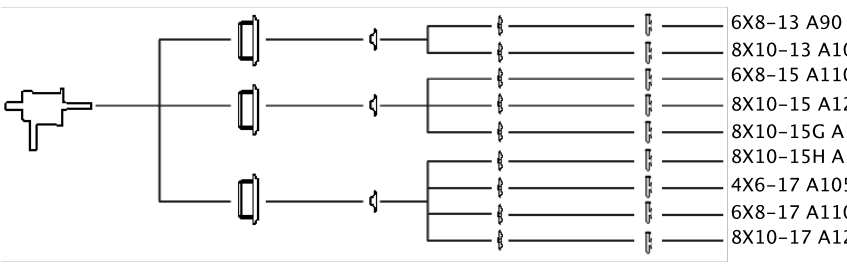					6X8-13 A90 8X10-13 A100 6X8-15 A110 8X10-15 A120 8X10-15G A12 8X10-15H A12 4X6-17 A105 6X8-17 A110 8X10-17 A120

Lubrication conversion

Frame lubrication conversion

NOTICE:

- Never mix greases of different consistencies (NLGI 1 or 3 with NLGI 2) or with different thickeners. For example, never mix a lithium-based grease with a polyurea-based grease. Doing so may result in decreased performance.
- Remove the bearings and old grease if you need to change the grease type or consistency. Failure to do so may result in equipment damage or decreased performance.

Use a grease that is suitable for high temperatures when you have frame pumpage temperatures greater than 350°F (177°C). Ensure that mineral-oil greases have oxidation stabilizers and a consistency of NLGI 3.

Table 23: Lubricating-grease requirements

Most pumps use Sunoco 2EP grease. High temperature units with a pumpage temperature greater than 350° F (177°C) use Mobil SCH32.

This table shows which brand of grease to use when lubricating the pump.

	Pumpage temperature less than 350°F (177°C)	Pumpage temperature greater than 350°F (177°C)
NGLI consistency	2	3
Mobil	Mobilux EP2	SCH32
Exxon	Unirex N2	Unirex N3
Sunoco	Mutipurpose 2EP	N/A
SKF	LGMT 2	LGMT 3

Convert from greased-for-life or regreaseable to oil-lubricated bearings

1. Remove the plug from the oil-return slot in the frame located under the radial bearing. Use this table as a guide.

Pump model	Action
STi	Remove the epoxy from the return slot.
MTi, LTi, XLT-i, and i-17	Remove the set screw installed in the oil-return hole.

2. Remove the plug from the oil-return hole in the bearing housing (134).
3. Replace both bearings with unshielded, oil-lubricated bearings.

Table 24: Bearing types

Frame Double row	Inboard bearing Duplex	Outboard bearing	
STi	6207	3306	7306
MTi	6309	3309	7309
LTi	6311	Not applicable	7310
XLT-i, i17	6313	3313	7313

4. Remove the grease fittings (193) to prevent accidental greasing. Two plugs (408H) are required to replace the two grease fittings.

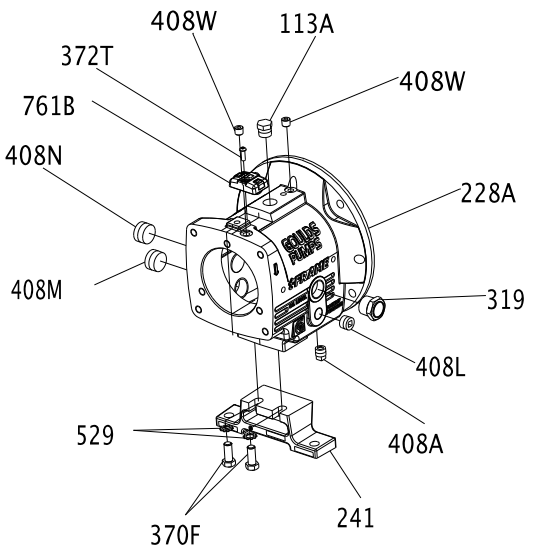

Item Number	Size	Description	Quantity
113	1/4"-18 NPT	External hex/square head pipe plug	2
113A	1/2"-14 NPT	External hex/square head pipe plug	1
193	1/4"-18 NPT	Grease fitting	2
228	- - - -	Bearing frame	1
241	- - - -	Frame foot	1
370F	1/2"	Hex cap screw	2
408A	3/8"-18 NPT	External square head pipe plug (magnetic)	1

Item Number	Size	Description	Quantity
408J	1/4"-18 NPT	External hex/square head pipe plug	1
408L	1/2"-14 NPT	Square countersunk headless pipe plug	1
408M	1" 11-1/2" NPT	Square countersunk headless pipe plug	1
529	1/2"	Light helical spring lock washer	2

Conversion from flood-oil to pure-oil mist

Consult your local ITT representative for further information on this topic.

Convert from flood oil to regreaseable

Consult your local ITT representative for further information on this topic.

Troubleshooting

Operation troubleshooting

Symptom	Cause	Remedy
The pump is not delivering liquid.	The pump is not primed.	Re-prime the pump and check that the pump and suction line are full of liquid.
	The suction line is clogged.	Remove the obstructions.
	The impeller is clogged.	Back-flush the pump in order to clean the impeller.
	The shaft is rotating in the wrong direction.	Change the rotation. The rotation must match the arrow on the bearing housing or pump casing.
	The foot valve or suction pipe opening is not submerged enough.	Consult an ITT representative for the proper submersion depth. Use a baffle in order to eliminate vortices.
	The suction lift is too high.	Shorten the suction pipe.
The pump is not producing the rated flow or head.	The gasket or O-ring has an air leak.	Replace the gasket or O-ring.
	The stuffing box has an air leak.	Replace or readjust the mechanical seal.
	The impeller is partly clogged.	Back-flush the pump in order to clean the impeller.
	The clearance between the impeller and the pump casing is excessive.	Adjust the impeller clearance.
	The suction head is not sufficient.	Make sure that the suction-line shutoff valve is fully open and that the line is unobstructed.
	The impeller is worn or broken.	Inspect and replace the impeller if necessary.
The pump starts and then stops pumping.	The pump is not primed.	Re-prime the pump and check that the pump and suction line are full of liquid.
	The suction line has air or vapor pockets.	Rearrange the piping in order to eliminate air pockets.
	The suction line has an air leak.	Repair the leak.
The bearings are running hot.	The pump and driver are not aligned properly.	Realign the pump and driver.
	There is not sufficient lubrication.	Check the lubricant for suitability and level.
	The lubrication was not cooled properly.	Check the cooling system.
The pump is noisy or vibrates.	The pump and driver are not aligned properly.	Realign the pump and driver.
	The impeller is partly clogged.	Back-flush the pump in order to clean the impeller.
	The impeller or shaft is broken or bent.	Replace the impeller or shaft as necessary.
	The foundation is not rigid.	Tighten the hold-down bolts of the pump and motor. Make sure the baseplate is properly grouted without voids or air pockets.
	The bearings are worn.	Replace the bearings.
	The suction or discharge piping is not anchored or properly supported.	Anchor the suction or discharge piping as necessary according to recommendations in the Hydraulic Institute Standards Manual.
	The pump is cavitating.	Locate and correct the system problem.
The mechanical seal is leaking excessively.	The packing gland is not adjusted properly.	Tighten the gland nuts.
	The stuffing box is not packed properly.	Check the packing and repack the box.
	The mechanical seal parts are worn.	Replace the worn parts.
	The mechanical seal is overheating.	Check the lubrication and cooling lines.
	The shaft sleeve is scored.	Machine or replace the shaft sleeve as necessary.
The motor requires excessive power.	The discharge head has dropped below the rated point and is pumping too much liquid.	Install a throttle valve. If this does not help, then trim the impeller diameter. If this does not help, then contact your ITT representative.
	The liquid is heavier than expected.	Check the specific gravity and viscosity.
	The stuffing-box packing is too tight.	Readjust the packing. If the packing is worn, then replace the packing.
	Rotating parts are rubbing against each other.	Check the parts that are wearing for proper clearances.
	The impeller clearance is too tight.	Adjust the impeller clearance.

Alignment troubleshooting

Symptom	Cause	Remedy
Horizontal (side-to-side) alignment cannot be obtained (angular or parallel).	The driver feet are bolt-bound.	Loosen the pump's hold-down bolts, and slide the pump and driver until you achieve horizontal alignment.
	The baseplate is not leveled properly and is probably twisted.	1. Determine which corners of the baseplate are high or low. 2. Remove or add shims at the appropriate corners. 3. Realign the pump and driver.

Assembly troubleshooting

Symptom	Cause	Remedy
There is excessive shaft end play.	The internal clearance of the bearings exceeds the recommended amount.	Replace the bearings with a bearing of the correct type.
	The snap ring is loose in the bearing-housing groove.	Re-seat the snap ring.
There is excessive shaft and sleeve runout.	The sleeve is worn.	Replace the sleeve.
	The shaft is bent.	Replace the shaft.
There is excessive bearing-frame flange runout.	The shaft is bent.	Replace the shaft.
	The flange of the bearing frame is distorted.	Replace the bearing-frame flange.
There is excessive frame-adapter runout.	There is corrosion on the frame adapter.	Replace the frame adapter.
	The adapter-to-frame gasket is not seated properly.	Re-seat the frame adapter and make sure that the adapter-to-frame gasket is seated properly.
There is excessive seal chamber or stuffing-box cover runout.	The seal chamber or the stuffing-box cover is not properly seated in the frame adapter.	Re-seat the seal chamber or stuffing-box cover.
	There is corrosion or wear on the seal chamber or stuffing-box cover.	Replace the seal chamber or stuffing-box cover.
There is excessive vane-tip runout of the impeller.	The vane is bent.	Replace the impeller.

i-ALERT™ Condition Monitor troubleshooting

Symptom	Cause	Remedy
There are no green or red flashing LEDs.	The battery is dead.	Replace the condition monitor.
	The unit is deactivated.	Activate the condition monitor.
	The unit is malfunctioning.	Consult your ITT representative for a warranty replacement.
The red LEDs are flashing, but the temperature and vibration are at acceptable levels.	The baseline is bad.	Check the temperature and vibration levels and reset the condition monitor.
	The unit is malfunctioning.	Consult your ITT representative for a warranty replacement.

Parts Listings and Cross-Sectionals

Parts list

Table 25: Construction material and quantity

Item	Quantity	Part name	Pump Material				
			All D.I.	D.I. With 316 SS impeller	All 316SS	All CD4MCu	All Alloy 20
100	1	Casing	1012	1012	1203	1216	1204
101	1	Impeller	1013	1203	1203	1216	1204
105	1	Lantern Ring	Teflon				
106	1 set	Stuffing Box Packing	Non-asbestos braid				
107	1	Gland—Packed Box	1203			1204	
108	1	Frame Adapter	1013				
109C	1***	Outboard Bearing End Cover	1001				
112A	1	Outboard Bearing	Double row angular contact (duplex pair for LTi)				
113	2	Plug—Grease Relief	2210				
113B	1	Plug—Oil Fill	2210				
122	1	Shaft—Without Sleeve	2229			2230	
122	1	Shaft—With Sleeve	2238				
126	1	Shaft Sleeve	2229				2230
134	1	Bearing Housing	1001				
136	1	Bearing Locknut	Steel				
168A	1	Radial Bearing	Single row ball				
184	1	Seal Chamber/Stuffing Box Cover	1012	1012	1203	1216	1204
193	2	Grease Fitting	Steel				
228	1	Bearing Frame	STi 1013, All others - 1001				
236A	10	Cap Screw—Bearing Clamp Ring	2210				
239	1	Support, Casing	–	–	2201*	2201*	2201*
241	1	Frame Foot	1001				
248	1	Oil Thrower	2210				
250	1	Gland—Mechanical Seal	Material varies				
253B	1	Bearing Clamp Ring	2210				
319	1	Sight Glass	Glass/steel				
332A	1	Outboard Labyrinth Seal w/O-rings	Brass ASTM B505-96				
333A	1	Inboard Labyrinth Seal w/O-rings	Brass ASTM B505-96				
351	1	Casing Gasket	Aramid fiber w/EPDM				
353	4	Gland Stud	2228				
355	4	Gland Stud Nut	2228				
358	1	Plug—Casing Drain	2210		2229	2230	
358Y	1 ***	Plug, Impeller	2229			2230	
360C	1 ***	Gasket—Thrust End Cover	Buna				
360D	1	Gasket—Frame-to-Adapter	Buna				
360Q	1	Gasket—Gland-to-Stuffing Box Cover	Material varies				
361A	1	Retaining Ring	Steel				
370	****	Bolt—Adapter to Case	2210		2228		
370B	4	Bolt—Frame-to-Adapter	2210				
370C	**	Clamp Bolt —Bearing Housing	2210				
370D	**	Jack Bolt—Bearing Housing	2210				
370F	2	Bolt—Frame Foot to Frame	2210				
370H	2	Stud—Stuffing Box Cover-to-Adapter	2228				
370Y	2	Bolt—Cap Casing to Support	–	–	2210*		
371C	6 ***	Cap Screw-End Cover to Bearing Housing	2210				
382	1	Bearing Lockwasher	Steel				
383	1	Mechanical Seal	Material varies				
400	1	Coupling Key	2210				

Item	Quantity	Part name	Pump Material				
			All D.I.	D.I. With 316 SS impeller	All 316SS	All CD4MCu	All Alloy 20
408A	1	Plug—Oil Drane	2210				
408H	4	Plug—Oil Mist Connection	2210				
408J	1	Plug—Oiler	2210				
408L	1	Plug—Oil Cooler Inlet	2210				
408M	1	Plug—Oil Cooler Outlet	2210				
408N	1	Plug—Sight Glass	2210				
412A	1	O-Ring, Graphoil Impeller	–	–	*		
418	3	Jack Bolt—Adapter-to-Case	2228				
423	3	Jam Nut—Bearing Housing Jack Bolt	2210				
423B	2	Hex Nut—Stuffing Box Cover to Adapter	2228				
428	1	Gasket, Plug	Teflon				
437	1	Lockwasher, Casing to Support	–	–	2210*		
458Y	1 ***	Plug, Impeller	2229			2230	
469B	2	Dowel Pin—Frame-to-Adapter	Steel				
494	1	Tube Element, Finned Cooled	304SS / Copper				
496	1	O-Ring Bearing Housing	Buna N				
412A	1	O-Ring—Impeller	Viton				
497F	1	O-Ring—Outboard Labyrinth Rotor	Viton				
497G	1	O-Ring—Outboard Labyrinth Stator	Viton				
497H	1	O-Ring—Inboard Labyrinth Rotor	Viton				
497J	1	O-Ring—Inboard Laybrinth Stator	Viton				
497L	1	O-Ring Internal (inboard)	Viton				
497N	1	O-Ring Internal (outboard)	Viton				
503	1	Adapter Ring	1013				
529	1	Lockwasher—Frame Foot-to-Bearing Frame	Steel				
555	1	Tube, Finned Cooling Assembly	304AA / Copper				
555A	1	Tube, Ftg Male (Frame Cooling)	Brass				
555B	2	Connector, Thermocouple (Frame Cooling)	Brass				
555C	2	Elbow, Female (Frame Cooling)	Brass				
555D	1	Conn TC Sealed PWR	Cast iron				
761B	1	i-ALERT™ Condition Monitor	Stainless steel/epoxy				

Table 26: Construction material and quantity (continued)

Item	Quantity	Part name	Pump Material				
			All 317SS	All Monel	All Nickel	All Hastelloy C	All Hastelloy B
100	1	Casing	1209	1119	1601	1215	1217
101	1	Impeller	1209	1119	1601	1215	1217
105	1	Lantern Ring	Teflon				
106	1 set	Stuffing Box Packing	Non-asbestos braid				
107	1	Gland—Packed Box	1209	1119	1601	1215	1217
108	1	Frame Adapter	1013				
109C	1***	Outboard Bearing End Cover	1001				
112A	1	Outboard Bearing	Double row angular contact (duplex pair for LTi)				
113	2	Plug—Grease Relief	2210				
113B	1	Plug—Oil Fill	2210				
122	1	Shaft—Less Sleeve	2232	2150	2155	2248	2247
122	1	Shaft—With Sleeve	2229				
126	1	Shaft Sleeve	2232	2150	2155	2248	2247
134	1	Bearing Housing	1001				
136	1	Bearing Locknut	Steel				
168A	1	Radial Bearing	Single row ball				
184	1	Seal Chamber/Stuffing Box Cover	1209	1119	1601	1215	1217
193	2	Grease Fitting	Steel				

Item	Quantity	Part name	Pump Material				
			All 317SS	All Monel	All Nickel	All Hastelloy C	All Hastelloy B
228	1	Bearing Frame	STi-1013, All others - 1001				
236A	10	Cap Screw—Bearing Clamp Ring	2210				
239	1	Support, Casing	–	–	–	2201*	–
241	1	Frame Foot	1001				
248	1	Oil Thrower	2210				
250	1	Gland—Mechanical Seal	Material varies				
253B	1	Bearing Clamp Ring	2210				
319	1	Sight Glass	Glass/steel				
332A	1	Outboard Labyrinth Seal w/O-rings	Brass ASTM B505-96				
333A	1	Inboard Labyrinth Seal w/O-rings	Brass ASTM B505-96				
351	1	Casing Gasket	Aramid fiber w/EPDM				
353	4	Gland Stud	2232	2150	2155	2248	2247
355	4	Gland Stud Nut	2232	2150	2155	2248	2247
358	1	Plug—Casing Drain	2232	2150	2156	2248	2247
358Y	1 ***	Plug, Impeller	2232	2150	2156	2248	2156
360C	1 ***	Gasket—Thrust End Cover	Buna				
360D	1	Gasket—Frame-to-Adapter	Buna				
360Q	1	Gasket—Gland-to-Stuffing Box Cover	Material varies				
361A	1	Retaining Ring	Steel				
370	****	Bolt—Adapter to Case	2228				
370B	4	Bolt—Frame-to-Adapter	2210				
370C	**	Clamp Bolt —Bearing Housing	2210				
370D	**	Jack Bolt—Bearing Housing	2210				
370F	2	Bolt—Frame Foot to Frame	2210				
370H	2	Stud—Stuffing Box Cover-to-Adapter	2228				
370H	2	Bolt—Cap Casing to Support	–	–	–	2210*	–
371C	6 ***	Cap Screw-End Cover to Bearing Housing	2210				
382	1	Bearing Lockwasher	Steel				
383	1	Mechanical Seal	Material varies				
400	1	Coupling Key	2210				
408A	1	Plug—Oil Drane	2210				
408H	4	Plug—Oil Mist Connection	2210				
408J	1	Plug—Oiler	2210				
408L	1	Plug—Oil Cooler Inlet	2210				
408M	1	Plug—Oil Cooler Outlet	2210				
408N	1	Plug—Sight Glass	2210				
412A	1	O-Ring, Graphoil Impeller	–	–	–	*	–
418	3	Jack Bolt—Adapter-to-Case	2228				
423	3	Jam Nut—Bearing Housing Jack Bolt	2210				
423B	2	Hex Nut—Stuffing Box Cover to Adapter	2228				
428	1	Gasket, Plug	Teflon				
437	1	Lockwasher, Casing to Support	–	–	–	2210*	–
458Y	1***	Plug, Impeller	2232	2150	2155	2248	2247
469B	2	Dowel Pin—Frame-to-Adapter	Steel				
494	1	Tube Element, Finned Cooled	304SS / Copper				
496	1	O-Ring Bearing Housing	Buna N				
412A	1	O-Ring—Impeller	Viton				
497F	1	O-Ring—Outboard Labyrinth Rotor	Viton				
497G	1	O-Ring—Outboard Labyrinth Stator	Viton				
497H	1	O-Ring—Inboard Labyrinth Rotor	Viton				
497J	1	O-Ring—Inboard Laybrinth Stator	Viton				
497L	1	O-Ring Internal (inboard)	Viton				
497N	1	O-Ring Internal (outboard)	Viton				
503	1	Adapter Ring	1013				

Item	Quantity	Part name	Pump Material				
			All 317SS	All Monel	All Nickel	All Hastelloy C	All Hastelloy B
529	1	Lockwasher—Frame Foot-to-Bearing Frame	Steel				
555	1	Tube, Finned Cooling Assembly	304AA / Copper				
555A	1	Tube, Ftg Male (Frame Cooling)	Brass				
555B	2	Connector, Thermocouple (Frame Cooling)	Brass				
555C	2	Elbow, Female (Frame Cooling)	Brass				
555D	1	Conn TC Sealed PWR	Cast iron				
761B	1	i-ALERT™ Condition Monitor	Stainless steel/epoxy				

Table 27: Construction material and quantity (continued)

Item	Quantity	Part name	Pump Material (3196, HT 3196, CV 3196, 3796)	Pump Material (NM 3196)	Pump Material (3198)
			All Titanium	Vinylester	D.I./Teflon
100	1	Casing	1220	6929	9639
101	1	Impeller	1220	6929	6944
105	1	Lantern Ring	Teflon	–	–
106	1 set	Stuffing Box Packing	Non-asbestos braid	–	–
107	1	Gland—Packed Box	1220	–	–
108	1	Frame Adapter	1013		
109C	1***	Outboard Bearing End Cover	1001		
112A	1	Outboard Bearing	Double row angluar contact (duplex pair for LTi)		
113	2	Plug—Grease Relief	2210		
113B	1	Plug—Oil Fill	2210		
122	1	Shaft—Less Sleeve	2156	2229	–
122	1	Shaft—With Sleeve	2229		6947
126	1	Shaft Sleeve	2156	2229	–
134	1	Bearing Housing	1001		
136	1	Bearing Locknut	Steel		
168A	1	Radial Bearing	Single row ball		
184	1	Seal Chamber/Stuffing Box Cover	1220	6929	9639
193	2	Grease Fitting	Steel		
228	1	Bearing Frame	STi - 1013, All others - 1001		
236A	10	Cap Screw—Bearing Clamp Ring	2210		
239	1	Support, Casing	–	–	–
241	1	Frame Foot	1001		
248	1	Oil Thrower	2210		
250	1	Gland—Mechanical Seal	Material varies		
253B	1	Bearing Clamp Ring	2210		
319	1	Sight Glass	Glass/steel		
332A	1	Outboard Labyrinth Seal w/O-rings	Brass ASTM B505-96		
333A	1	Inboard Labyrinth Seal w/O-rings	Brass ASTM B505-96		
351	1	Casing Gasket	Aramid fiber w/EPDM		
353	4	Gland Stud	2156	2229	2229
355	4	Gland Stud Nut	2156	2229	2229
358	1	Plug—Casing Drain	2156	–	–
358Y	1 ***	Plug, Impeller	2156	–	–
360C	1 ***	Gasket—Thrust End Cover	Buna		
360D	1	Gasket—Frame-to-Adapter	Buna		
360Q	1	Gasket—Gland-to-Stuffing Box Cover	Material varies		
361A	1	Retaining Ring	Steel		
370	****	Bolt—Adapter to Case	2228		
370B	4	Bolt—Frame-to-Adapter	2210		
370C	**	Clamp Bolt —Bearing Housing	2210		
370D	**l	Jack Bolt—Bearing Housing	2210		
370F	2	Bolt—Frame Foot to Frame	2210		

Item	Quantity	Part name	Pump Material (3196, HT 3196, CV 3196, 3796)	Pump Material (NM 3196)	Pump Material (3198)
			All Titanium	Vinylester	D.I./Teflon
370H	2	Stud—Stuffing Box Cover-to-Adapter	2228		
370Y	2	Bolt—Cap Casing to Support	–	–	–
371C	6 ***	Cap Screw-End Cover to Bearing Housing	2210		
382	1	Bearing Lockwasher	Steel		
383	1	Mechanical Seal	Material varies		
400	1	Coupling Key	2210		
408A	1	Plug—Oil Drane	2210		
408H	4	Plug—Oil Mist Connection	2210		
408J	1	Plug—Oiler	2210		
408L	1	Plug—Oil Cooler Inlet	2210		
408M	1	Plug—Oil Cooler Outlet	2210		
408N	1	Plug—Sight Glass	2210		
412A	1	O-Ring, Graphoil Impeller	–	–	–
418	3	Jack Bolt—Adapter-to-Case	2228		
423	3	Jam Nut—Bearing Housing Jack Bolt	2210		
423B	2	Hex Nut—Stuffing Box Cover to Adapter	2228		
428	1	Gasket, Plug	Teflon		
437	1	Lockwasher, Casing to Support	–	–	–
458Y	1 ***	Plug, Impeller	2156	–	–
469B	2	Dowel Pin—Frame-to-Adapter	Steel		
494	1	Tube Element, Finned Cooled	304SS / Copper		
496	1	O-Ring Bearing Housing	Buna N		
412A	1	O-Ring—Impeller	Viton		
497F	1	O-Ring—Outboard Labyrinth Rotor	Viton		
497G	1	O-Ring—Outboard Labyrinth Stator	Viton		
497H	1	O-Ring—Inboard Labyrinth Rotor	Viton		
497J	1	O-Ring—Inboard Laybrinth Stator	Viton		
497L	1	O-Ring Internal (inboard)	Viton		
497N	1	O-Ring Internal (outboard)	Viton		
503	1	Adapter Ring	1013		
529	1	Lockwasher—Frame Foot-to-Bearing Frame	Steel		
555	1	Tube, Finned Cooling Assembly	304AA / Copper		
555A	1	Tube, Ftg Male (Frame Cooling)	Brass		
555B	2	Connector, Thermocouple (Frame Cooling)	Brass		
555C	2	Elbow, Female (Frame Cooling)	Brass		
555D	1	Conn TC Sealed PWR	Cast iron		
761B	1	i-ALERT™ Condition Monitor	Stainless steel/epoxy		

Table 28: Key to table symbols

–	Not applicable
*	Only applicable for HT 3196
**	3 for STi, MTi, LTi 4 for XLT-i, i17
***	XLT-I and i17 only
****	4 for 6 in. STi 8 for 8 in. STi and MTi 16 for 13 in. MTi, LTi , XLT-I 24 for 15 in. XLT-I 12 for 10 in. MTi, LTi , i17

Table 29: Material-code reference

Material	Goulds material code	ASTM	Din	ISO	JIS
Cast Iron	1001	A48 CLASS 20			
Ductile Iron	1012	A395 Gr60-40-18			
Ductile Iron	1013	A536 Gr60-42-10			
CD4MCu	1041	A744 CD4MCU			
Monel	1119	A494 GrM-35-1			
316SS	1203	A744 CF-8M	1.4408		G5121 (SC514)
Alloy 20	1204	A744CN-7M	1.4500		
317SS	1209	A744CG-8M	1.4448		
Hastelloy C	1215	A494 CW-6M			
CD4MCu	1216	A744CD4MCU	9.4460		
Hastelloy B	1217	A494 N-7M			
Titanium	1220	B367 GrC-3			
Nickel	1601	A494 GrCZ100			
Monel	2150	B164 UNS N04400			
Nickel	2155	B160 UNS N02200			
Titanium	2156	B348 Gr2			
Carbon Steel	2201	A576 Gr. 1018 and 1020			
Carbon Steel	2210	A108Gr1211			
304SS	2228	A276 Type 304			
316SS	2229	A276 Type 316			
Alloy 20	2230	B473 (N08020)			
317SS	2232	A276			
4150 Steel	2237	A322Gr4150			
4140 Steel	2238	A434Gr4140			
4140 Steel	2239	A193 Gr. B7			
Alloy B-2	2247	B335 (N10665)			
Alloy C-276	2248	B574 (N10276)			
GMP-2000	6929	N/A			
PFA Lined Steel	6944	N/A			
PFA Lined 316SS	6947	N/A			
PFA Lined Ductile Iron	9639	N/A			

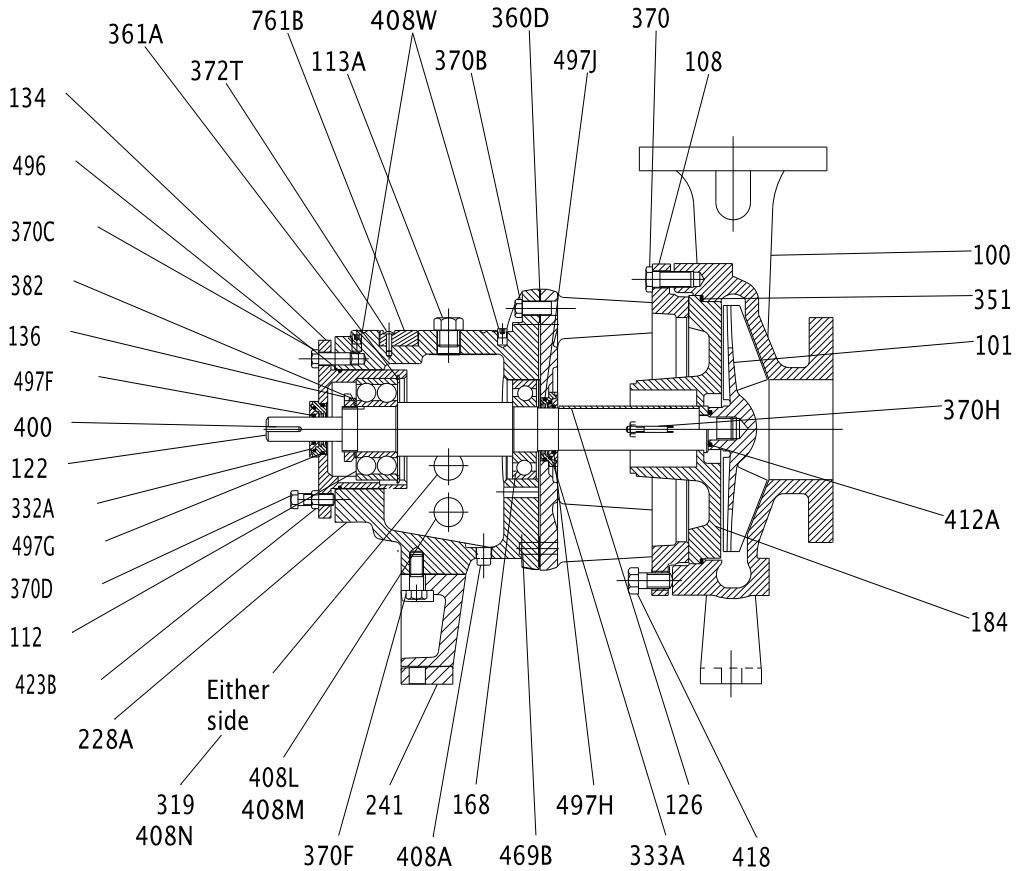

Figure 33: 3196 cross-sectional drawing

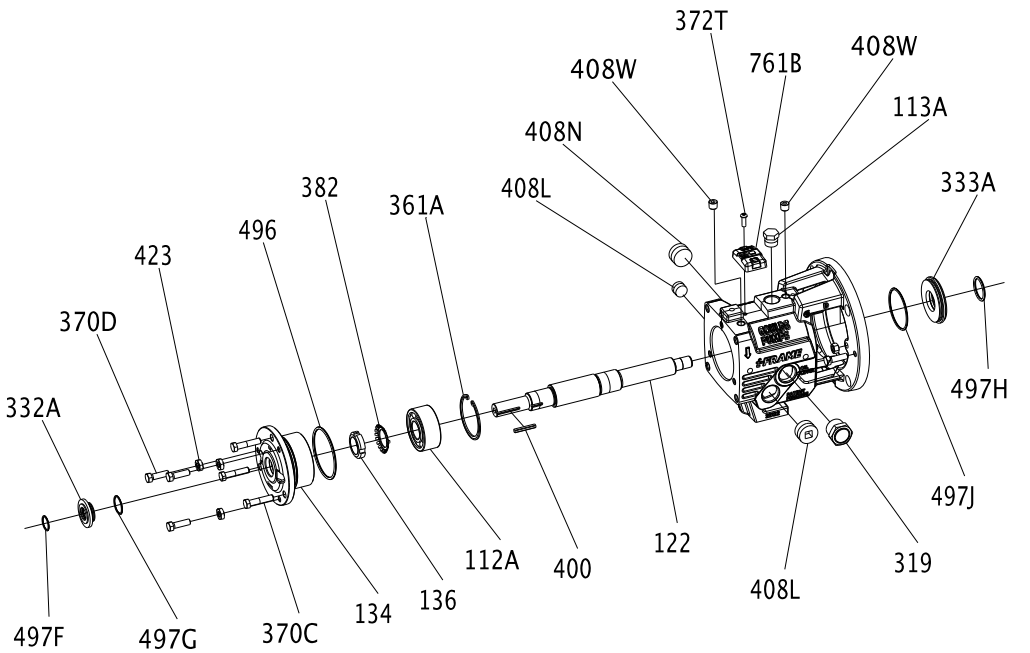

Figure 34: STi bearing-frame exploded view

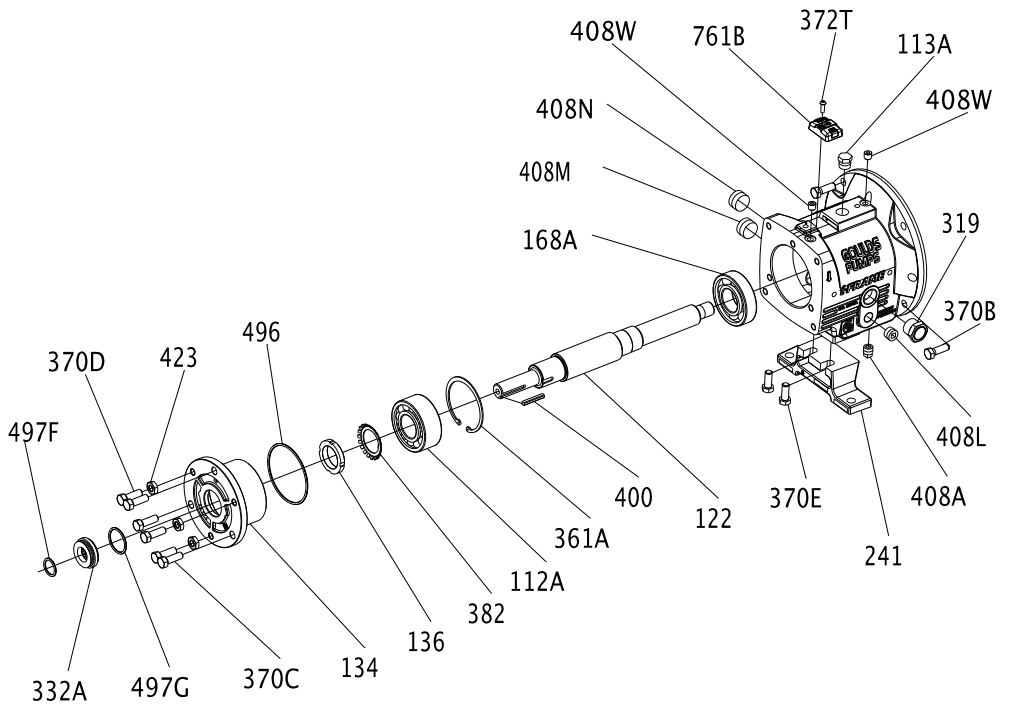

Figure 35: MTi bearing-frame exploded view

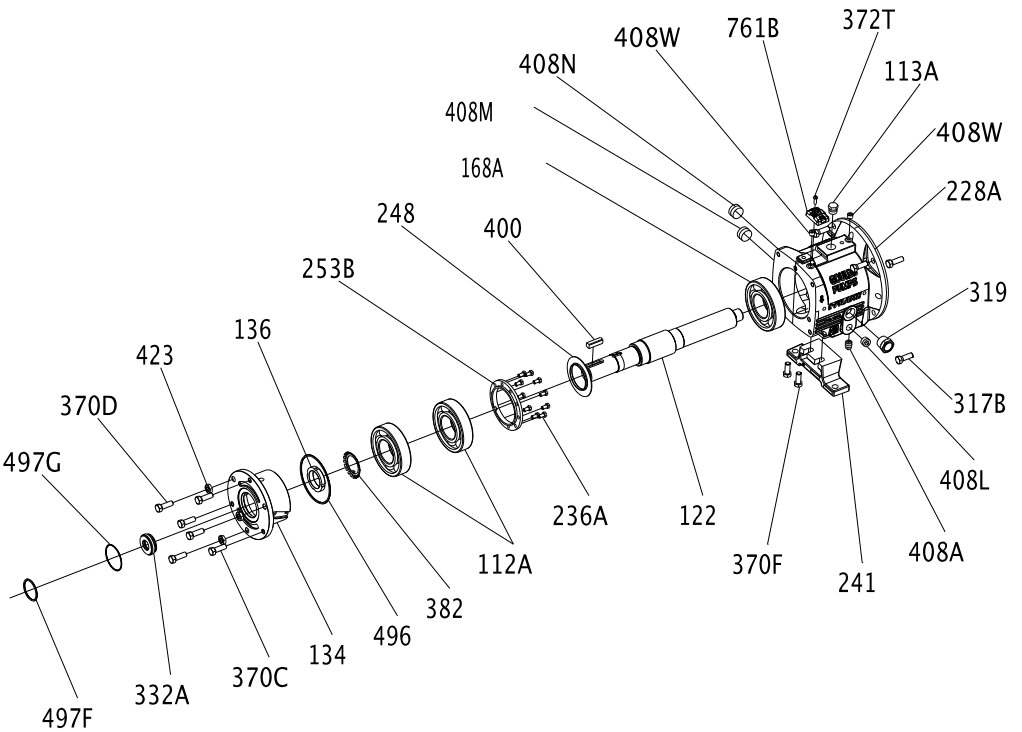

Figure 36: LTi bearing-frame exploded view

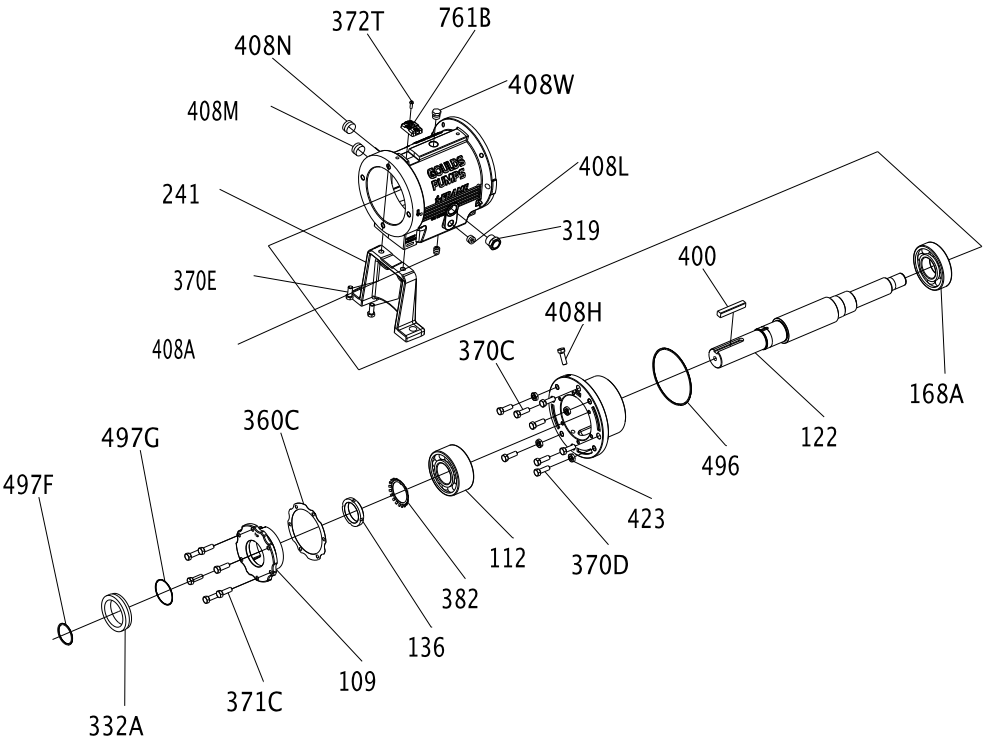

Figure 37: XLT-i bearing-frame exploded view

The finned-tube oil cooler is standard on HT 3196 and optional on all other models.

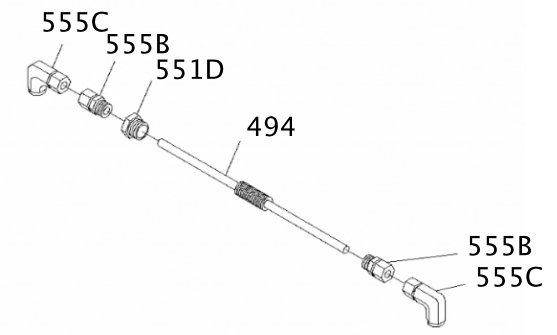

Figure 38: Finned-tube oil cooler exploded view

Certification: CE or CE ATEX

Certificates of conformance

CSA Certificate

CSA INTERNATIONAL

Certificate of Compliance

Certificate: 1992883 **Master Contract:** 236924

Project: 2254252 **Date Issued:** 2009/12/16

Issued to: **ITT Corporation**

240 Fall St
Seneca Falls, NY 13148
USA
Attention: Anthony Stavale

The products listed below are eligible to bear the CSA Mark shown with adjacent indicators 'C' and 'US' for Canada and US or with adjacent indicator 'US' for US only or without either indicator for Canada only.

C US

D. Simpson, Certifier

Issued by: D. Simpson, Certifier

PRODUCTS

CLASS 2258 03 - PROCESS CONTROL EQUIPMENT - Intrinsically Safe and Non - Incendive Systems - For Hazardous Locations

CLASS 2258 83 - PROCESS CONTROL EQUIPMENT-Intrinsically Safe and Non-Incendive - Systems-For Hazardous Locations-Certified to U.S. Standards

Class I, Division 1, Group A, B, C and D; Class II, Group E, F and G; Class III:

- Condition Monitor, Model LCCM, p/n C07667A, battery operated (non-replaceable, non-rechargeable), intrinsically safe, temperature code T4 (at max ambient of 100C).

APPLICABLE REQUIREMENTS

CAN/CSA-C22.2 No. 0-M91 - General Requirements – Canadian Electrical Code, Part II

CAN/CSA-C22.2 No.157-92 - Intrinsically Safe and Non-Incendive Equipment for Use in Hazardous Locations

UL Std No.913, Ed. 7 - Intrinsically Safe Apparatus and Associated Apparatus for Use in Class I, II and III, Division 1, Hazardous Locations

DQD 507 Rev. 2009-09-01

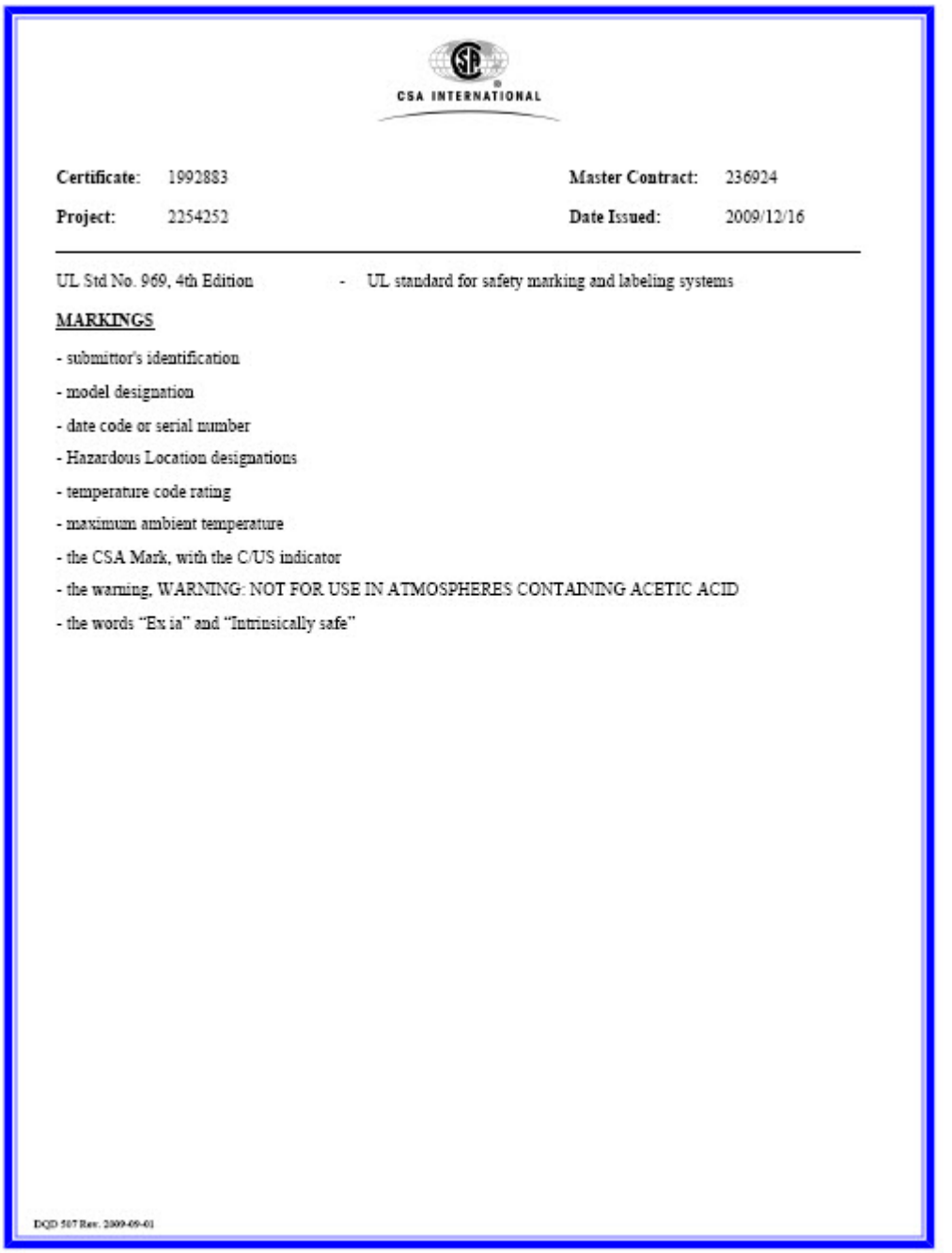

CSA INTERNATIONAL

Certificate: 1992883 **Master Contract:** 236924

Project: 2254252 **Date Issued:** 2009/12/16

UL Std No. 969, 4th Edition - UL standard for safety marking and labeling systems

MARKINGS

- submittor's identification
- model designation
- date code or serial number
- Hazardous Location designations
- temperature code rating
- maximum ambient temperature
- the CSA Mark, with the C/US indicator
- the warning, WARNING: NOT FOR USE IN ATMOSPHERES CONTAINING ACETIC ACID
- the words "Ex ia" and "Intrinsically safe"

DQD 507 Rev. 2009-09-01

ATEX notification

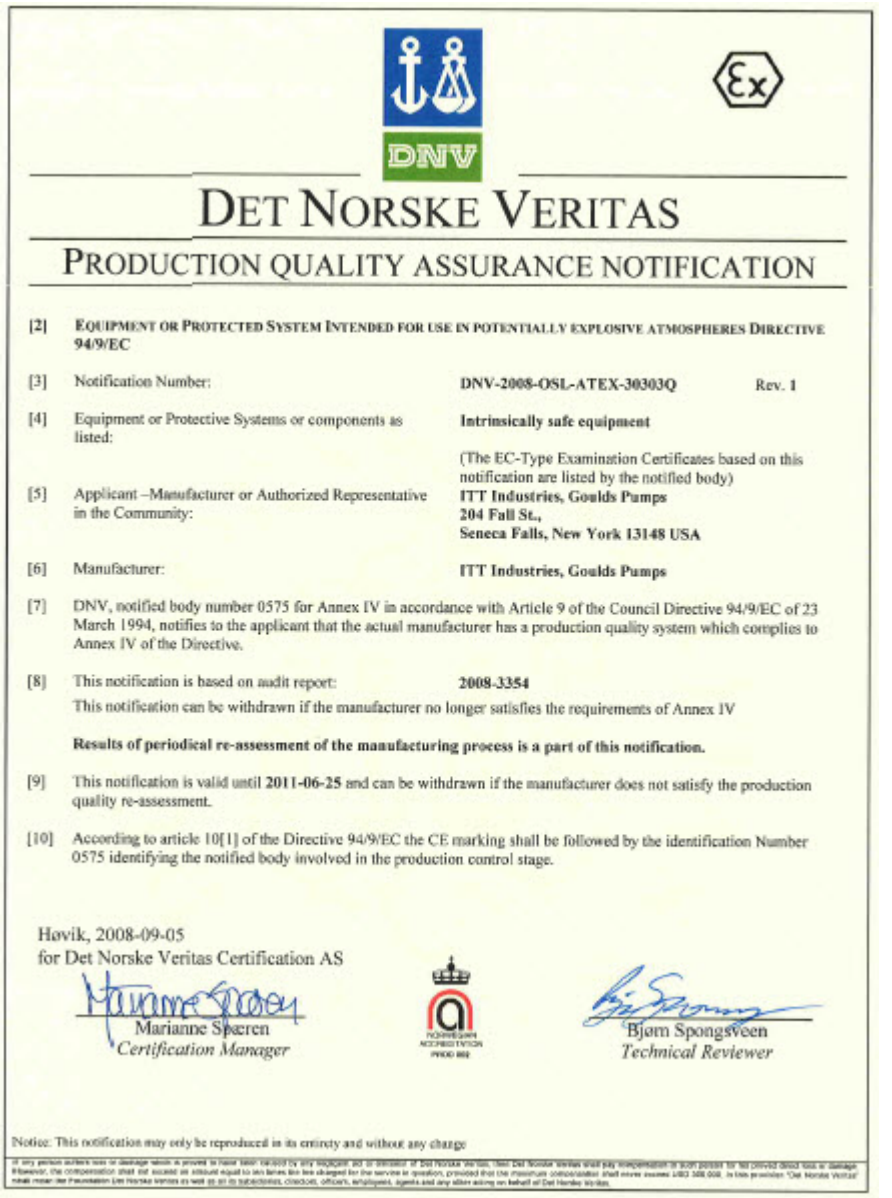

DET NORSKE VERITAS

PRODUCTION QUALITY ASSURANCE NOTIFICATION

[2] EQUIPMENT OR PROTECTED SYSTEM INTENDED FOR USE IN POTENTIALLY EXPLOSIVE ATMOSPHERES DIRECTIVE 94/9/EC

[3] Notification Number: **DNV-2008-OSL-ATEX-30303Q** Rev. 1

[4] Equipment or Protective Systems or components as listed: **Intrinsically safe equipment**

(The EC-Type Examination Certificates based on this notification are listed by the notified body)

[5] Applicant –Manufacturer or Authorized Representative in the Community: **ITT Industries, Goulds Pumps**
204 Fall St.,
Seneca Falls, New York 13148 USA

[6] Manufacturer: **ITT Industries, Goulds Pumps**

[7] DNV, notified body number 0575 for Annex IV in accordance with Article 9 of the Council Directive 94/9/EC of 23 March 1994, notifies to the applicant that the actual manufacturer has a production quality system which complies to Annex IV of the Directive.

[8] This notification is based on audit report: **2008-3354**
This notification can be withdrawn if the manufacturer no longer satisfies the requirements of Annex IV

Results of periodical re-assessment of the manufacturing process is a part of this notification.

[9] This notification is valid until **2011-06-25** and can be withdrawn if the manufacturer does not satisfy the production quality re-assessment.

[10] According to article 10[1] of the Directive 94/9/EC the CE marking shall be followed by the identification Number 0575 identifying the notified body involved in the production control stage.

Høvik, 2008-09-05
for Det Norske Veritas Certification AS

Marianne Sperren
Certification Manager

Bjørn Spongsveen
Technical Reviewer

Notice: This notification may only be reproduced in its entirety and without any change

IECEx Certificate of Conformity

IECEx Certificate of Conformity

INTERNATIONAL ELECTROTECHNICAL COMMISSION
IEC Certification Scheme for Explosive Atmospheres
for rules and details of the IECEx Scheme visit www.iecex.com

Certificate No.: IECEx LCI 08.0038 Issue No.:0 Certificate history:

Status: Current

Date of Issue: 2008-09-16 Page 1 of 3

Applicant:
ITT Corp.
Goulds pumps
240 Fall Street
Seneca Falls, NY 13148
United States of America

Electrical Apparatus: **Condition Monitor**
Optional accessory:

Type of Protection: **ia**

Marking:
ITT Corp.
Goulds pumps
240 Fall Street
Seneca Falls, NY 13148
U.S.A.
Condition Monitor
Type : LCCM, p/n C07667A
Ex ia IIC T4
Tamb : -40°C à 100°C

Approved for issue on behalf of the IECEx Certification Body: Marc Gillaux

Position: Ex Certification Manager

Signature: (for printed version)

Date: le 16 Septembre 2008

1. This certificate and schedule may only be reproduced in full.
2. This certificate is not transferable and remains the property of the issuing body.
3. The Status and authenticity of this certificate may be verified by visiting the Official IECEx Website.

Certificate issued by:

Laboratoire Central des Industries Electriques (LCIE)
33 Avenue du General Leclerc
FR-92260 Fontenay-aux-Roses
France

IECEx Certificate of Conformity

Certificate No.: IECEx LCI 08.0038

Date of Issue: 2008-09-16 Issue No.: 0

Page 2 of 3

Manufacturer: **ITT Corp.**
Goulds pumps
240 Fall Street
Seneca Falls, NY 13148
United States of America

Manufacturing location(s):

This certificate is issued as verification that a sample(s), representative of production, was assessed and tested and found to comply with the IEC Standard list below and that the manufacturer's quality system, relating to the Ex products covered by this certificate, was assessed and found to comply with the IECEx Quality system requirements. This certificate is granted subject to the conditions as set out in IECEx Scheme Rules, IECEx 02 and Operational Documents as amended.

STANDARDS:
The electrical apparatus and any acceptable variations to it specified in the schedule of this certificate and the identified documents, was found to comply with the following standards:

IEC 60079-0 : 2004 Edition: 4.0	Electrical apparatus for explosive gas atmospheres - Part 0: General requirements
IEC 60079-11 : 2006 Edition: 5	Explosive atmospheres - Part 11: Equipment protection by intrinsic safety "i"

*This Certificate **does not** indicate compliance with electrical safety and performance requirements other than those expressly included in the Standards listed above.*

TEST & ASSESSMENT REPORTS:
A sample(s) of the equipment listed has successfully met the examination and test requirements as recorded in

Test Report:

FR/LCI/ExTR08.0043/00

Quality Assessment Report:
NO/DNV/QAR08.0006/00

Chinese Certificate of Conformity

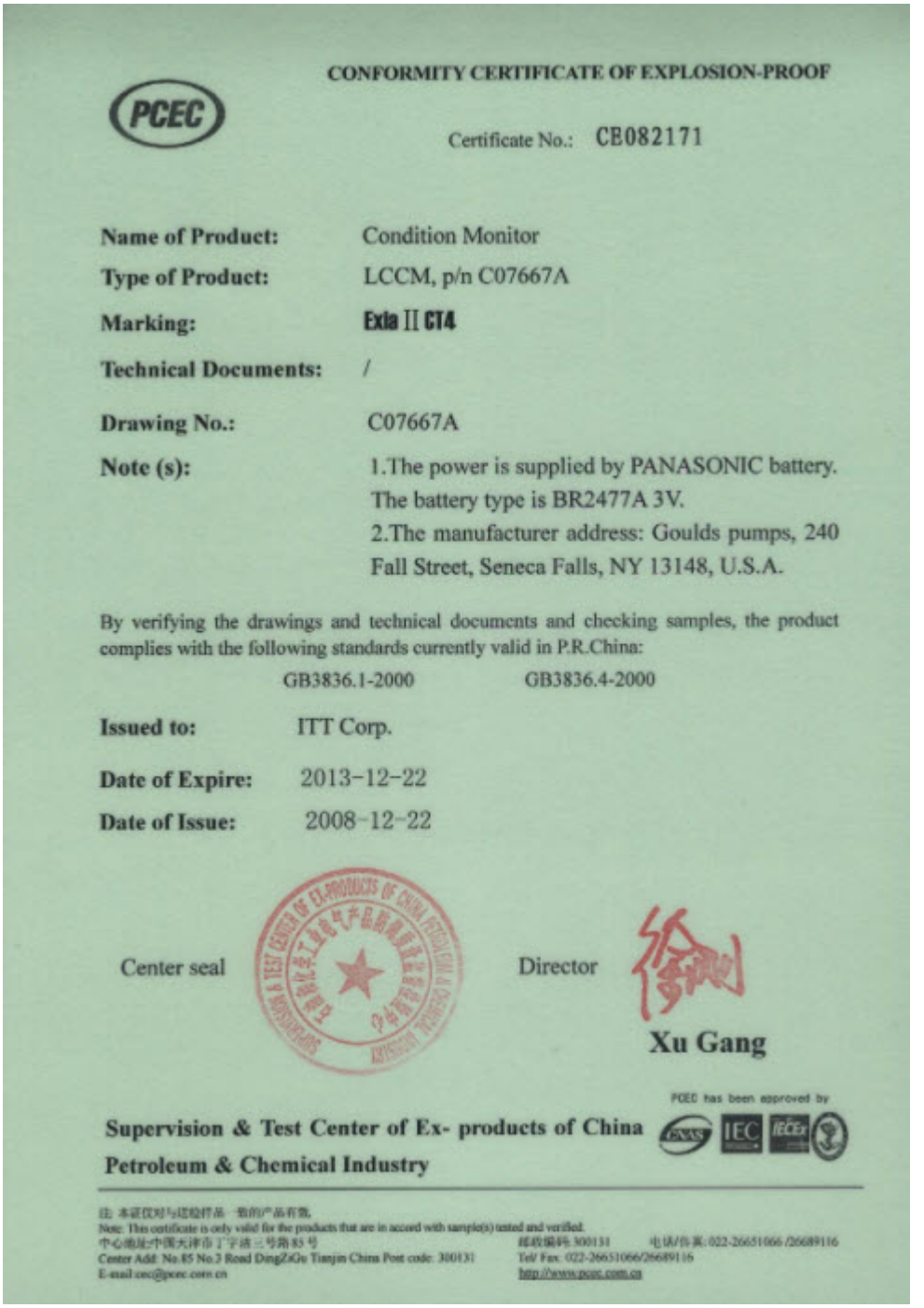

CONFORMITY CERTIFICATE OF EXPLOSION-PROOF

PCEC

Certificate No.: CB082171

Name of Product: Condition Monitor

Type of Product: LCCM, p/n C07667A

Marking: Exia II CT4

Technical Documents: /

Drawing No.: C07667A

Note (s): 1.The power is supplied by PANASONIC battery. The battery type is BR2477A 3V.
2.The manufacturer address: Goulds pumps, 240 Fall Street, Seneca Falls, NY 13148, U.S.A.

By verifying the drawings and technical documents and checking samples, the product complies with the following standards currently valid in P.R.China:

GB3836.1-2000 GB3836.4-2000

Issued to: ITT Corp.

Date of Expire: 2013-12-22

Date of Issue: 2008-12-22

Center seal

Director

Xu Gang

PCEC has been approved by

Supervision & Test Center of Ex- products of China Petroleum & Chemical Industry

Note: This certificate is only valid for the products that are in accord with sample(s) tested and verified.
Center Add: No.85 No.3 Road DingZiGu Tianjin China Post code: 300131
Tel/ Fax: 022-26651066/26689116
E-mail:cec@pcec.com.cn
http://www.pcec.com.cn

Other Relevant Documentation or Manuals

For additional documentation

For any other relevant documentation or manuals, contact your ITT representative.

Local ITT Contacts

Regional offices

Region	Address	Telephone	Fax
North America (Headquarters)	ITT - Goulds Pumps 240 Fall Street Seneca Falls, NY 13148 USA	+1 315-568-2811	+1 315-568-2418
Asia Pacific	ITT Industrial Process 10 Jalan Kilang #06-01 Singapore 159410	+65 627-63693	+65 627-63685
Europe	ITT - Goulds Pumps Millwey Rise Industrial Estate Axminster, Devon, England EX13 5HU	+44 1297-630250	+44 1297-630256
Latin America	ITT - Goulds Pumps Camino La Colina # 1448 Condominio Industrial El Rosal Huechuraba Santiago 8580000 Chile	+562 544-7000	+562 544-7001
Middle East and Africa	ITT - Goulds Pumps Achileos Kyrou 4 Neo Psychiko 115 25 Athens Greece	+30 210-677-0770	+30 210-677-5642

Visit our website for the latest version of this document and more information:
http://www.gouldspumps.com

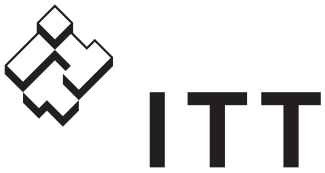

ENGINEERED FOR LIFE

240 Fall Street
Seneca Falls, NY 13148
USA
Tel. 1-800-446-8537
Fax (315) 568-2418

© 2014 ITT Corporation
The original instruction is in English. All non-English instructions are translations of the original instruction.

Form en-US.2014-07.IOM.3196.i-FRAME

PRO services

i-ALERT®2

Equipment Health Monitor

Bluetooth® SMART

ITT

ENGINEERED FOR LIFE

i-ALERT®2

What it Does:

Monitor
Tracks vibration, temperature & run-time hours 24/7/365.

Alarm
Checks every five minutes & alarms if equipment is outside normal operating conditions.

Trend
Stores data once per hour & on alarm for 30 days. Stores the weekly average, minimum & maximum up to 5 years.

Analyze
Diagnose machine faults with vibration tools Fast Fourier Transform (FFT) & Time Wave Form Analysis.

Environment
Rated for any industrial environment. IP67 water & dust resistant. Intrinsically Safe with a 3-year battery life (use dependent).

Wireless
Sync data via Bluetooth Smart enabled smartphones and tablets.

Spend less time collecting data and more time fixing problems. The *i-ALERT®2* mobile app has the ability to scan multiple *i-ALERT®2*s within range to quickly and safely inspect multiple machines.

How it Works:

1 ACTIVATE

The *i-ALERT devices* are light activated by removing the sticker. *i-ALERT®* begins wirelessly broadcasting once activated.

2 AUTO CONFIGURATION

i-ALERT2 averages the vibration over 25 hours of run-time and sets the alarm levels to 2 x average (0.08ips minimum). Temperature alarm default to 80°C (176°F).

OR

2 MANUAL CONFIGURATION

User manually sets the alarm thresholds via the *i-ALERT®* mobile application.

3 MONITOR

i-ALERT checks every 5 minutes. If two consecutive readings are above alarm threshold the *i-ALERT* will go into alarm.

Mounting Options:

Mill a slot

Drill & tap

Epoxy[1]

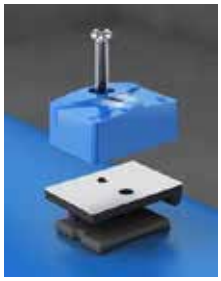

[1]Epoxy not included

Monitor, Alarm, Trend, Analyze

Dashboard

Simple, intuitive dashboard to track vibration, temperature, run-time & battery life.

Trending

Trend vibration, temperature, & kurtosis to monitor any changes in the equipment operation.

Advanced Tools

Download or request a Fast Fourier Transform (FFT) & Time Wave Form to perform vibration analysis.

Pump Performance Curve*

Load the pump performance curve based on the pump serial number.

Report Generator

Generate a machine health report and send the report via an email.

Service Locator

Locate and contact the nearest ITT Service Center.

* Currently available for select ITT Goulds Pumps models

Technical Specifications

Dimensions
- 57mm L x 39mm W x 25mm H
- 2.24in L x 1.54in W x 1.04in H

Measurements
- Temperature
- 3 Axis Vibration (RMS Velocity)
- Kurtosis
- Machine run-time counter
- Fast Fourier Transform (FFT)
- Time Waveform (TWF)

Sensors
- 3-axis accelerometer ±16g
- Frequency range:
  - axial - 10-1,000Hz
  - horizontal - 10-1,000Hz
  - radial - 10-600Hz
- FFT resolution: 1Hz/bin
- Temperature sensor -40°C to +150°C (-40°F to +302°F)

Memory
- x,y,z velocity rms, kurtosis, temperature
- Short term: 1/hour for 30 days
- Long term: weekly summary (min,max, average) for 5 years

Environment
- Ambient temperature: -40°C to +84°C (-40°F to +183°F)
- IP67 water and dust protected
- Intrinsically Safe
- Class I, II, III, Division 1 Groups C,D,E,F,G
- ATEX Zone 0 AEx ia IIB Ga (Groups C & D)
- RoHS, WEEE, REACH, CE, FCC

Battery & Power
- 3.6 V Lithium battery
- Life expectancy > 3 years (use dependent)

Materials
- Shell Material: Nylon 12
- Mounting Stud: 316ss

Display
- Green LED for unit ON
- Red LED for unit in ALARM
- Blue LED for Bluetooth radio transmitting

Wireless Synching
- 2.4 GHz Bluetooth 4.0 Low Energy
- Syncing range: 30m (100 feet)
- Syncing devices: iPhone 4s/5/5s/6/6 Plus, iPad 3/4/Air/Mini, Android coming soon

Hazardous Rated Devices & Case

pictures courtesy of www.Xciel.com

Devices
- iPhone 4s/5/5s/6/6 Plus
- iPad 3/4/Air/Mini

Hazardous Ratings
- CSA Class 1 Division 2 Groups A,B,C,D, T6
- ATEX Zone 2 Ex ic IIC T6 Gc

Certifications
- ANSI/ISA Std 12.12.01
- ANSI/UL Std 60950-1
- CAN/CSA std C22.2 No. 60950-1
- CSA Std C22.2 No. 213

Environment
- IP67 (Water / Dust Resistant)
- Humidity 5% to 95% non-condensing
- Opertating Temperature -4 to 102°F (-2 to 39°C)

ITT
ENGINEERED FOR LIFE

GOULDS PUMPS | Bornemann | Engineered Valves | PRO services | Blakers | Ctreat

240 Fall Street
Seneca Falls, NY 13148
www.i-alert.com

© 2015 ITT Corporation, Inc.

B.iALERT2.en-US.2015-06

ASHCROFT®
Trust the shield.™

Type 1130 – 2″, 2½″, 3½″, 4″, 4½″, & 6″ Differential Gauge

- *Piston actuator*
- *Stainless steel case*
- *Ranges from 5 psid-150 psid*
- *Static pressures up to 6000 psi(4)*
- *Aluminum(3), brass or stainless steel bodies(1)*
- *Buna-N O-rings (others available)*
- *Superior magnets for smoother pointer motion*
- *Standard or explosion-proof reed switches available*
- *5-year warranty*

The Type 1130 uses a piston design where small migration of the process media is permissible.(1) It is recommended for high differential and high static pressures, up to 6000 psi. Body materials are available in Aluminum, Brass and Stainless Steel, with Buna, Viton or EPDM seals.(2)

NOTES:

(1) Not for use with incompatible media.

(2) Other wetted parts include stainless steel spring, Teflon piston and ceramic magnet.

(3) Aluminum bodies not to be used with water or corrosive applications.

(4) Static pressure over 3000 psi in SS only.

PRODUCT SPECIFICATIONS

Model Number:	1130
Accuracy (Ascending):	±2%
Migration:	Minor
Ranges:	0-5 psid to 150 psid
Maximum Static Pressure:	3000 psi (6000 psi for SS)
Actuator:	Piston
Case Material:	Stainless steel
Dial Size:	2″ (20), 2½″ (25), 3½″ (35), 4″ (40), 4½″ (45), 6″ (60)
Maximum Process Temp.:	175°F/80°C
Body Materials:	Aluminum (F), brass (A), stainless steel (S)
O-Rings/Diaphragm:	Buna-N
Connection Size (Female):	¼ NPT (25)
Connection Location:	In-Line (S), Lower (L), Back (B)
Window:	Glass

PRODUCT OPTIONS

Switches(1):		Available
⅛ NPT Female Adapter:	XGE	Available
Front Flange:	XFF	Available
Viton O-Rings:	XVD	Available
EPDM O-Rings:	XEM	Available
Fill(3):		
Glycerin	L	Standard
Silicone	XGV	Available
Window		
Plastic:	XPD	Available
Explosion Proof:	XEK	Available(2)
Pipe Mounting Bracket:	XTM	In-line (only)

(1) Applicable to switches:
XV1 – 1 SPST with DIN plug
XV2 – 1 SPST with terminal strip
XV3 – 2 SPST with DIN plug
XV4 – 2 SPST with terminal strip
XV5 – 1 SPDT with DIN plug
XV6 – 1 SPDT with terminal strip
XV7 – 2 SPDT with DIN plug
XV8 – 2 SPDT with terminal strip
Adjustable from 20-100% of range
Preset at 90% ascending
Terminal or DIN connected switches are not available with back connection

(2) Specify lower or back connection for gauge (not available in-line) and switch type V2, V4, V6, V8

(3) Liquid fill has an effect on accuracy that varies with range and temperature. Liquid filling may be required only in some very severe applications.

HOW TO ORDER:

25	1130	FD	25S	XXX	30#

Dial Size: 2″, 2½″, 3½″, 4″, 4½″, & 6″
Case Type Number: 1130
Body Material
Connection Size: ¼ NPTF (25)
Connection Location: In-line (S), Lower (L), Back (B)
Optional Features: see above
Standard Pressure Range

ISO 9001
REGISTERED FIRM
BULLETIN DP-1130

All specifications are subject to change without notice.
All sales subject to standard terms and conditions.
© Ashcroft Inc. 2010 09/14

Ashcroft Inc., 250 East Main Street, Stratford, CT 06614 USA
Tel: 203-378-8281 • Fax: 203-385-0408
email: info@ashcroft.com • www.ashcroft.com

Type 1130 – 2″, 2½″, 3½″, 4″, 4½″, & 6″ Differential Gauge

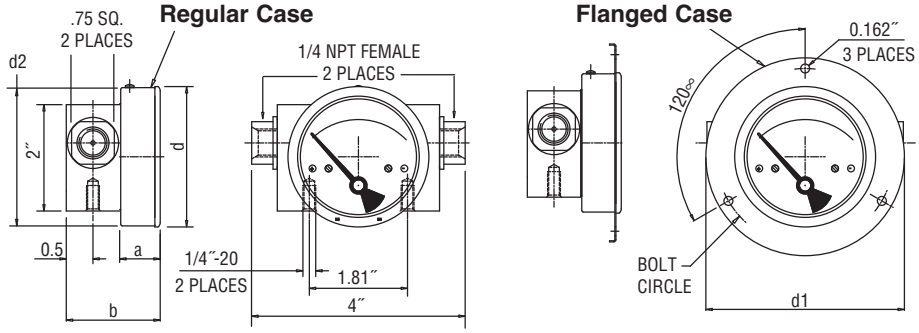

Type 1130 Dimension Drawing

Dial Size	a	b	d	d^1	d^2	Bolt Circle
2″	0.70″	1.70″	2.08″	3.11″	2.04″	2.72″
2.5″	0.75″	1.75″	2.59″	3.66″	2.55″	3.26″
3.5″	0.75″	1.75″	3.26″	4.29″	3.22″	3.89″
4″	0.75″	1.75″	4.10″	5.15″	4.01″	4.76″
4.5″	0.75″	1.75″	4.71″	5.74″	4.60″	5.35″
6″	0.75″	1.75″	6.07″	7.12″	6.00″	6.73″

Type 1130 – Standard Ranges

psi		0-5	0-8	0-10	0-15	0-20	0-25	0-30	
kPa	0-25		0-50	0-75	0-100		0-160	0-200	0-250
kg/cm²-bar	0-0.25		0-0.5	0-0.75	0-1		0-1.6	0-2	0-2.5

psi	0-40	0-50	0-60		0-80		0-100		0-150
kPa	0-300		0-400	0-500		0-600	0-700	0-900	0-1000
kg/cm²-bar	0-3		0-4	0-5		0-6	0-7	0-9	0-10

Ratings for Both Standard & Explosion Proof Switches:

SPST SWITCH
Specifications:
Contact Rating
10 VA ac (rms) or dc (max)
Switching Current
0.5 Amp ac (rms) or dc (max)
Switch Voltage
100 Vac/Vdc (max)

SPDT SWITCH
Specifications:
Contact Rating
3 VA ac (rms) or dc (max)
Switching Current
.3 Amp ac (rms) or dc (max)
Switch Voltage
30 Vac/Vdc (max)

Explosion Proof Switches Information:

Switches and electrical connections are mounted in an explosion-proof enclosure with UL, CSA, Cenelec and FM approval. The enclosure meets Class 1, Groups B, C, D, Class 2 Groups E, F, G, Class 3, NEMA 7 & 9 and IP 66. Two ¾″ electrical conduit connections.

All specifications are subject to change without notice.
All sales subject to standard terms and conditions.
© Ashcroft Inc. 2010 09/14

Ashcroft Inc., 250 East Main Street, Stratford, CT 06614 USA
Tel: 203-378-8281 • Fax: 203-385-0408
email: info@ashcroft.com • www.ashcroft.com

ASHCROFT®
Trust the shield.™

Type 1259 Process Pressure Gauge

- *Solid front safety case*
- *Accuracy complies with ASME B40.1 Grade 2A (±0.5% of span)*
- *As-welded Bourdon tube for safety and longer life*
- *Micrometer adjustable pointer.*
- *Adjustable movement*
- *Ranges: vac to 20,000 psi*
- *Date coded socket to ensure pedigree*
- *Wetted part material printed on dial*
- *Liquid filled case option (Code L)*

The Type 1259 process gauge is offered with an as-welded Bourdon tube to ensure safety and a long life. Meeting ASME B40.1, the Type 1259 process gauge has been engineered to meet marketplace requirements.

TEMPERATURE LIMITS

	Ambient	Process	Storage
Dry	–20/200°F (–29/93°C)	–20/250°F (–29/121°C)	–40/250°F (–40/121°C)
LF (glycerin)	20/150°F (7/66°C)	20/200°F (7/93°C)	0/150°F (–18/66°C)

Note: Other than discoloration of the dial and hardening of the gasketing that may occur as ambient or process temperatures exceeds 150°F, non-liquid-filled gauges with standard glass windows, can withstand continuous operating temperatures up to 250°F (121°C). Liquid-filled gauges can withstand 200°F (93°C) but glycerin fill and acrylic window will tend to yellow. Accuracy at temperatures above or below the reference ambient temperature of 68°F (20°C) will be affected by approximately .4% per 25°F. Gauges with welded joints will withstand 750°F (450°F (232°C) with silver brazed joints) for short times without rupture, although other parts of the gauge will be destroyed and calibration will be lost. For continuous use and for process or ambient temperatures above 250°F (121°C), a diaphragm seal or capillary or siphon is recommended.

PRODUCT SPECIFICATIONS

Model Number:	1259
Accuracy:	½% full scale (Grade 2A, ASME B40.100)
Ranges:	Vacuum – 20,000 psi
Ring Type:	Cam lock, fiberglass reinforced thermoplastic
Dial Size:	4½" diameter
Case:	Solid front safety
Case Material:	Fiberglass reinforced thermoplastic
Weather Protection:	Dry Case: IP54 Liquid filled or hermetically sealed case: IP 65
Window:	Glass
Dial:	Aluminum, white background, black pressure scale.
Pointer:	Micrometer adjustable
Movement:	Adjustable 300 series ss
Bourdon Tube & Socket:	316L SS/316L SS (S)[1] K Monel/Monel (P)[1]
Conn. Size:	¼, ½ NPT
Conn. Location:	Lower
Weight (Lbs.)	2.5 (Dry) 3.5 (Liquid Filled)

PRODUCT OPTIONS

Fill:	Glycerin
Hermetic Seal:	XLJ
Flush Mounting Ring:	X56, X57
Shatter Proof Glass Window:	XSG
Window Acrylic:	XPD

[1] Joints welded

Dimensions

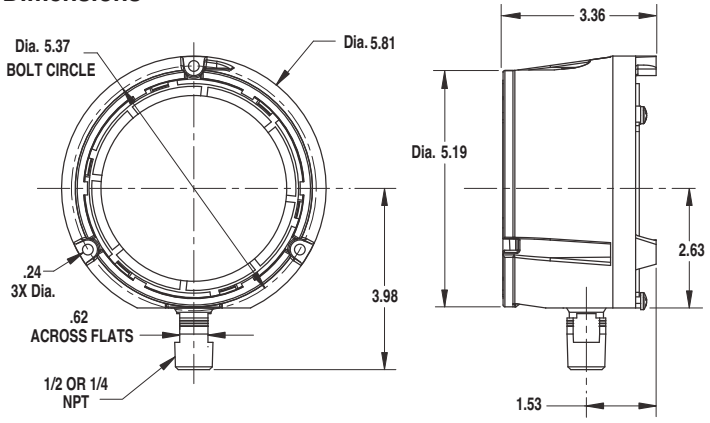

ISO 9001
REGISTERED FIRM

BULLETIN PR-1259

All specifications are subject to change without notice.
All sales subject to standard terms and conditions.
© 2014 Ashcroft Inc. 11/14

Ashcroft Inc., 250 East Main Street, Stratford, CT 06614 USA
Tel: 203-378-8281 • Fax: 203-385-0408
email: info@ashcroft.com • www.ashcroft.com

ASHCROFT®
Trust the shield.™

Type 1259 Process Pressure Gauge

PSI RANGES
Pressure – psi
Range
0/15
0/30
0/60
0/100
0/160
0/200
0/300
0/400
0/600
0/800
0/1000
0/1500
0/2000
0/3000
0/4000
0/6000
0/10,000
0/20,000
Vacuum
30/0 in.Hg
34/0 ftH_20
Compound
30˝Hg/15 psi
30˝Hg/30 psi
30˝Hg/60 psi
30˝Hg/100 psi
30˝Hg/150 psi
30˝Hg/300 psi

METRIC RANGES	
Pressure – kg/cm² and bar	
Range	**(Outer Scale) psi**
0/1	0/14
0/1.6	0/22
0/2.5	0/35
0/4	0/55
0/6	0/85
0/10	0/140
0/16	0/220
0/25	0/350
0/40	0/550
0/60	0/850
0/100	1400
0/160	2200
0/250	3500
0/400	5500
0/600	8500
0/1000	14,000
0/1600	22,000
Vacuum	**Outer Scale**
–1/0	30˝Hg
Compound	
–1/0/1.5	30˝Hg/20
–1/0/3	30˝Hg/40
–1/0/5	30˝Hg/70
–1/0/9	30˝Hg/125
–1/0/15	30˝Hg/215
–1/0/24	30˝Hg/340

METRIC RANGES	
Pressure – kPa	
Range	**(Outer Scale) psi**
0/100	0/14
0/160	0/22
0/250	0/35
0/400	0/55
0/600	0/85
0/1000	0/140
0/1600	0/220
0/2500	0/350
0/4000	0/550
0/6000	0/850
0/10,000	1400
0/16,000	2200
0/25,000	3500
0/40,000	5500
0/60,000	8500
0/100,000	14,000
0/160,00	22,000
Vacuum	**Outer Scale**
–100/0	30˝Hg
Compound	
–100/0/150	30˝Hg/20
–100/0/300	30˝Hg/40
–100/0/500	30˝Hg/70
–100/0/900	30˝Hg/125
–100/0/1500	30˝Hg/215
–100/0/2400	30˝Hg/340

Pressure – mPa	
Range	**(Outer Scale) psi**
0/0.1	0/14
0/0.16	0/22
0/0.25	0/35
0/0.4	0/55
0/0.6	0/85
0/1	0/140
0/1.6	0/220
0/2.5	0/350
0/4	0/550
0/6	0/850
Vacuum	**Outer Scale**
–0.1/0	30˝Hg
Compound	
–0.1/0/0.15	30˝Hg/20
–0.1/0/0.3	30˝Hg/40
–0.1/0/0.5	30˝Hg/70
–0.1/0/0.9	30˝Hg/125
–0.1/0/1.5	30˝Hg/215
–0.1/0/2.4	30˝Hg/340

Order Coding Example

45	1259	S	S	04	L	OPTIONAL X VARIATIONS	100	#

SIZE	TYPE	SYSTEM (TUBE & SOCKET)	CASE DESIGN SOLID FRONT	PROCESS CONNECTION SIZE	CONNECTION LOCATION	OPTIONS (X VARIATIONS)[1]	RANGE	ENGINEERING UNITS
(45) 4½	**1259**	**(S)** 316L[2] **(P)** K-Monel 500 tube, Monel 400 socket[2] [2] Max pressure 30,000psi	**(S)** Dry (IP54) **(SL)** Liquid filled (glycerin standard) (IP65)	**(02)** 1/4 NPT male **(04)** 1/2 NPT male	**(L)** Lower	**(LJ)** Hermetically Sealed, IP65 **(NH)** St. St. Wired Tag **(PD)** Acrylic window **(SG)** Safety glass **(56)** Flush mounting ring [1] Others on request	See above	**(#)** PSI **(BR)**) Bar **(KG)** Kilograms/CM2 **(KP)** Kilopascal **(IMV)** Inches of Mercury Vacuum

ISO 9001
REGISTERED FIRM

BULLETIN PR-1259

All specifications are subject to change without notice.
All sales subject to standard terms and conditions.
© 2014 Ashcroft Inc. 11/14

Ashcroft Inc., 250 East Main Street, Stratford, CT 06614 USA
Tel: 203-378-8281 • Fax: 203-385-0408
email: info@ashcroft.com • www.ashcroft.com

Silent Globe Check Valves

CF125ISC - Cast Iron

ASME Class 125 Flanged End Connections

Sure Flow Globe Check Valves are designed to close before the pump stops completely. This prevents flow reversal which eliminates water hammer and system surges associated with valve closure. They feature quiet operation, a guided disc and can be installed in the vertical or horizontal position. The CF125ISC is offered in sizes ranging from 2" to 24".

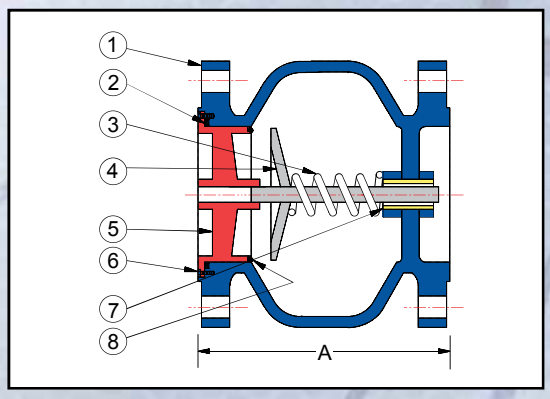

Construction		
Item	Description	Material
1	Cast Body	A126 Class B
2	O-Ring	Buna-N
3	Spring	Stainless Steel
4	Disc	Stainless Steel
5	Seat	Stainless Steel
6	Screw	Stainless Steel
7	Bushing	Stainless Steel
8	(Optional) Quad Ring	Buna-N

Notes:

- It is recommended that valves be installed 7 to 10 pipe lengths away from the turbulence.
- Consult factory for optional construction materials and installation instructions. Optional resilient seating of Buna-N or Viton Quad Ring available for 6" size and larger.

Manufacturer reserves the right to modify dimensions, materials, or design. Consult factory for certification.

Dimensions (Inches)				
Size		A	Cv	Shipping Weight (LBS)
Inches	Prefix			
2	0200	6 1/4	70	30
2 1/2	0250	7	105	34
3	0300	7 1/2	147	50
4	0400	8 1/2	265	75
5	0500	9 1/2	430	100
6	0600	10 1/2	605	130
8	0800	13 1/2	1,105	240
10	1000	16 1/4	1,700	360
12	1200	20 1/4	2,575	600
14	1400	22 3/4	3,350	710
16	1600	24 3/4	4,300	810
18	1800	22 1/2	5,593	910
20	2000	24	7,093	1,140
24	2400	24	10,562	2,600

Ordering Information

Example: Include full description

Size (Prefix)	Model Number
0400	**CF125ISC**

4" Flat Face Flanged Silent Check Valve, Cast Iron, 316 Stainless Steel Disc.

Operating Pressures and Temperatures		
Type	Size	psi @ Temp WOG
CF125ISC	2" - 12"	200 @ 150 °F
	14" - 24"	150 @ 150 °F

Sure Flow Equipment Inc.

Toll Free: 1-800-263-8251 Toll Free Fax: 1-800-876-1164
International: 1-905-335-1350 International Fax: 1-905-332-4993
Email: info@sureflowequipment.com www.sureflowequipment.com

McCROMETER

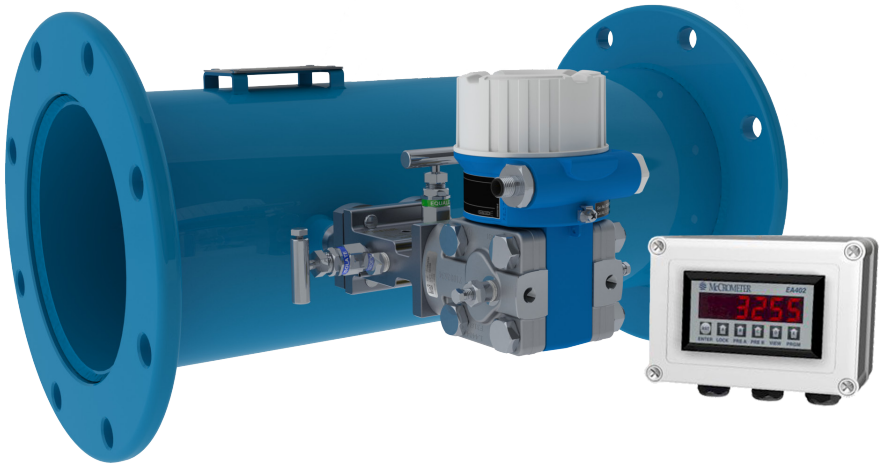

The VM V-Cone System Flow Meter . . .

Measurement Simplified.

The McCrometer VM V-Cone System flow meter is designed to make flow measurement easy!

- Small Footprint
- No Moving Parts
- For Hard-to-Fit Applications
- Designable Head Loss
- Ready to Install Right Out of the Box
- Self-Conditions Disturbed Flows
- Minimal Up or Downstream Piping Requirements

The VM V-Cone System flow meter keeps total cost of ownership where it should be...DOWN.

VM VCONE®

More than 70,000 V-Cones Installed Worldwide

25+ Years Experience

HIGH PERFORMANCE

The VM V-Cone flow meter offers great accuracy and repeatability, wide rangeability, installation flexibility and reduced maintenance in a compact all-in-one package.

ACCURACY YOU CAN COUNT ON

The key benefit to the VM V-Cone flow meter's unique design is its ability to provide reliable system accuracy of ±0.5% of rate over a 10:1 flow range under the most difficult flow conditions. Readings are precise and reliable, even under changing flow conditions and start/stop flows. The VM V-Cone is available for the following Municipal and Industrial applications:

- Well Water Production
- Raw Water Influent
- Filter and Pipe Galleries
- Finished Water Effluent
- Collection and Distribution Systems
- Facilities Distribution
- Cooling Water
- Reclaimed Water

SELF-CONDITIONS FLOW

The VM V-Cone flow meter's enhanced performance is due to the shape and positioning of the measuring element. The VM V-Cone flow meter's unique design centers the differential pressure cone centrally in the flow tube. This placement reshapes the flow profile, giving the V-Cone the smallest footprint of any in-line flow meter. This conditioned flow creates a low amplitude, high frequency signal that is accurate to ±0.5% of rate.

MAXIMUM INSTALLATION FLEXIBILITY

Due to its ability to accurately measure disturbed flow, the VM V-Cone flow meter doesn't require the same upstream or downstream straight pipe runs of many other flow meters. This key feature means the VM V-Cone flow meter can be installed virtually anywhere in a piping system or easily retrofitted into an existing piping layout. The result can be significant cost savings. It also means the VM V-Cone flow meter can fit almost anywhere other flow meters can't due to limited space or weight requirements.

LITTLE TO NO MAINTENANCE

The VM V-Cone System assures long-term performance because there are no moving parts to repair or replace. Once installed, the primary element rarely, if ever, needs to be removed from service. This leaves only the flow transmitter with the occasional recalibration over its lifetime. The V-Cone family of flow meters have a proven long life with installations exceeding 20 years without the need to be removed or re-calibrated.

PRE-PACKAGED, TESTED AND READY TO INSTALL

Start-Up and Commissioning are easy with the VM V-Cone Flow Meter. It comes wet flow calibrated and ready to install. All electronics come pre-programmed and ready to be powered and hooked into the SCADA, DCS or other control system, if desired.

FEATURES AND BENEFITS

- System accuracy of ±0.5% of rate
- Flow range: 10:1
- Installation: Typically 0-3 diameters upstream and 0-1 diameter downstream
- No parts to wear so little maintenance required
- HART® and Digital Protocols
- Totalizer pulse and linear 4-20mA outputs
- 3-way manifold for isolating the transmitter
- Displays both rate of flow and total flow
- Rate and total functions are independent of each other allowing for many different combinations of flow units

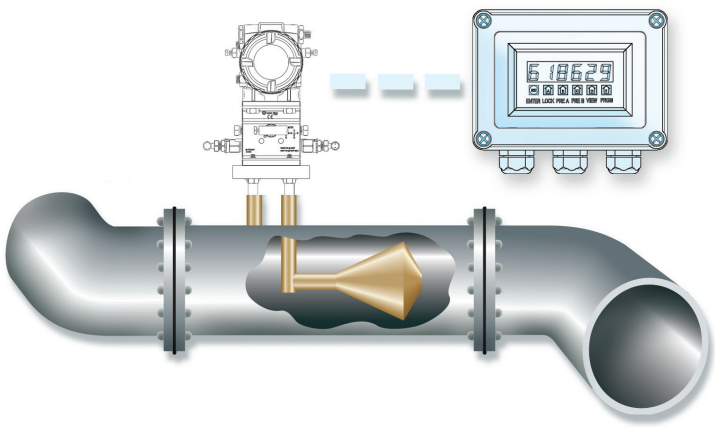

VM MODELS WITH 150psi AND 300psi PRESSURE RATING

PERFORMANCE

ACCURACY: ±0.5% of reading over standard flow range
RANGE: See dimensions chart below
HEAD LOSS: Typical ≤ 2 psi at Full Scale
MAXIMUM TEMPERATURE: (Standard Construction) 180°F constant
PRESSURE RATING: 150 psi
300 psi
POWER: 24VDC, Remote Display 110 VAC
OUTPUTS: Analog 4-20mA
OPTICALLY ISOLATED PULSE OUTPUT: For Remote Totalization
TRANSMITTER HOUSING: IP67
DISPLAY ENCLOSURE: NEMA 4X (IP66)

MATERIALS

Remote mount display includes 25 feet of power/signal cable. For additional length, please consult factory.
BODY
6-inch & larger: Fusion-bonded epoxy coated carbon steel
4-inch & smaller: All 304 stainless steel

MEASURING ELEMENT: 304 stainless steel
END CONNECTIONS
150#: 6-inch & larger: Carbon Steel AWWA Class D;
4-inch & smaller: Raised Face ANSI Class 150
300#: 6-inch and larger: Carbon Steel AWWA Class F;
4-inch & smaller: Raised Face ANSI Class 300
OPTIONS
- Other flange standards available
- Other laying lengths available

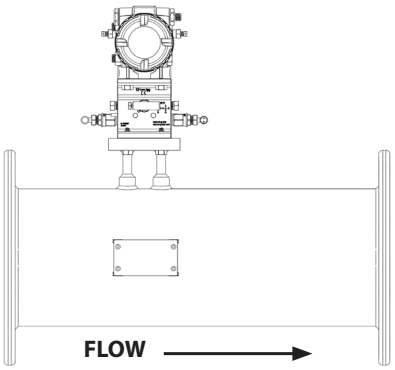

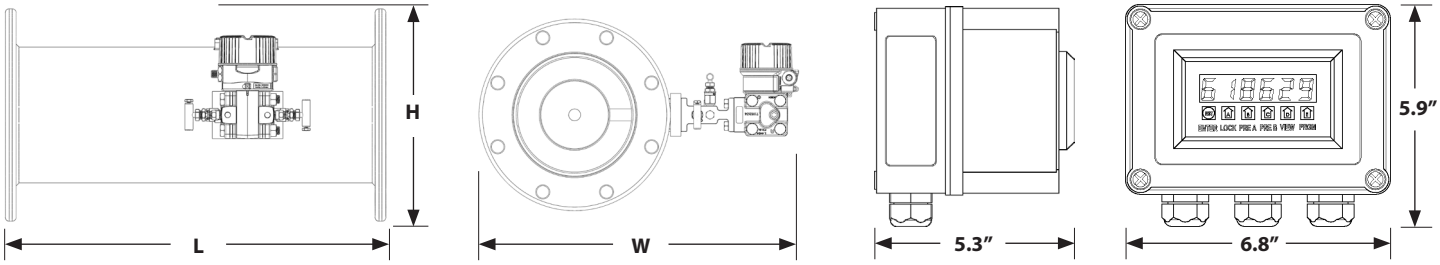

Remote Display w/ Enclosure

McCrometer reserves the right to change design specifications without notice.

FLOW RANGE CHART												
Size (in)	2	3	4	6	8	10	12	14	16	18	20	24
Applicable Standard Flow Ranges * (GPM)	10-230	20-500	40-900	80-1800	100-2250	120-2700	160-3750	200-4500	270-6000	300-7500	350-9000	560-14000
150#	**150#**											
Approx. Shipping Weight - lbs.	24	39	54	115	135	197	325	465	530	744	920	1254
W (width - inches)	15	16.5	17.75	20	22	24.5	27	28.5	30.75	32.5	34.75	39
H (height - inches)	14	15	13	14	15.4	16.6	19	21	23.5	25	27.5	32
L (length - inches)	12	14	16	22	26	28	30	30	30	32	36	48
No. of Bolts per Flange	4	4	8	8	8	12	12	12	16	16	20	20
300#	**300#**											
Approx. Shipping Weight - lbs.	29	44	90	145	220	340	430	650	820	1315	1517	1917
W (width - inches)	15.5	17	18.25	21	23	25.25	27.75	29.5	31.75	34	36.25	41
H (height - Inches)	15	16	13.8	15	16.3	17.5	20.5	23	25.5	28	30.5	36
L (length - inches)	12	14	16	22	26	28	30	30	30	32	36	48
No. of Bolts per Flange	8	8	8	12	12	16	16	20	20	24	24	24

* Meter will be 10:1 flow range standard (i.e. 400 to 40 GPM)

NOTE: Larger meter sizes, special laying lengths, other flow ranges available by special order.

The McCrometer Value Difference

For over 55 years, McCrometer has demonstrated an unyielding commitment to integrity which is reflected in our stringent flow meter calibration processes. Each flow meter is individually wet calibrated in one of our two world-class NIST traceable calibration facilities and delivered with a Certificate of Calibration.

NIST
National Institute of Standards and Technology

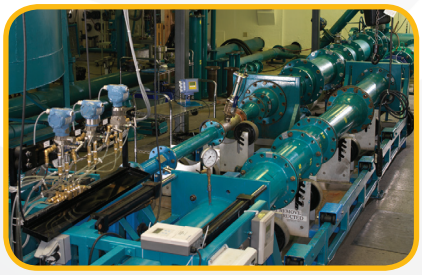

Our Hemet, California factory boasts a robust Calibration Test Lab that enables production of the most accurate and precise flow instrumentation. The test facility utilizes three gravimetric systems and two volumetric systems providing accuracy and calibration tests of flow meters from 1/2 to 20-inch diameter, with flow rates up to 4,000 gpm.

Our large volume test facility is located in Porterville, California. This facility is one of the world's larget volumetric test facilities owned by a meter manufacturer, and it offers accuracy and calibration tests of flow meters from 3 to 72-inch diameter, with flow rates up to 60,000 gpm.

REPRESENTED BY

McCROMETER

www.mccrometer.com
3255 West Stetson Avenue, Hemet, California 92545 USA
Phone 800-220-2279 | 951-652-6811 | Fax 951-652-3078

© 2014 by McCrometer, Inc.
Printed in USA
Lit Number 30121-51 Rev. 1.0/04-14

May be covered by one or more patents, including U.S. Patents 5,363,699 and 5,814,738 and counterparts outside the U.S.; other U.S. and foreign patents pending. V-Cone® is a registered trademark of McCrometer, Inc. HART® is a registered trademark of the HART Communication Foundation.

V2 System™
The Space Saver Solution

CONFIGURATION SHEET

MODEL V2150 / V2300 MAIN LINE FLOWMETER

DESCRIPTION

The V2 System's innovative design delivers repeatable accuracy of up to ±1% of rate over a 10:1 flow range under the most difficult flow conditions. The V2 System™ acts as its own flow conditioner, fully conditioning and mixing the flow prior to measurement. Readings are always precise and reliable, even under changing flow situations.
With this unique ability to self-condition flow, the V2 System virtually eliminates the need for upstream or downstream straight pipe runs. Thus, the V2 System can be installed virtually anywhere in a piping system or easily retrofit into an existing piping layout, resulting in significant installation flexibility and cost savings. In addition, the V2 System has proven to provide long-term performance with no moving parts to replace or maintain.

BENEFITS AND FEATURES

- Installs virtually anywhere in the system—even in tight spaces
- Displays both rate of flow and total flow. Rate and total functions are independent of each other allowing for many different combinations of flow units.
- Accuracy up to ±1% of rate
- Flow range: 10:1
- Installation: Typically 0-3 diameters upstream and 0-1 diameter downstream
- Totalizer pulse and linear 4-20 mAdc outputs
- No parts to wear so little maintenance required
- HART™ Interface
- 3-way manifold for isolating the transmitter

APPLICATIONS

Typical applications include:

- Water Well Production
- Cooling Water
- Raw Water Influent
- Reclaimed Water
- Finished Water Effluent
- Filter and Pipe Galleries
- Back Wash

Remote mounted display

3255 West Stetson Avenue
Hemet, CA 92545 USA
951-652-6811 / FAX 951-652-3078
Web Site: www.mccrometer.com

©2006 by McCrometer/Printed in USA
Lit#24509-01 Rev. 2.7/08-06

V2 System
The Space Saver Solution

SPACE SAVER MODELS V2150 & V2300

PERFORMANCE

ACCURACY: Up to ±1% of reading over standard flowrange.
RANGE: See dimensions chart below
HEAD LOSS: Typical ≤2 psi at Full Scale
MAXIMUM TEMPERATURE: (Standard Construction)
180°F constant
PRESSURE RATING: Model V2150: 150 psi
Model V2300: 300 psi
POWER: 110 VAC, optional 24VDC
OUTPUTS: Analog 4-20mA
OPTICALLY ISOLATED PULSE OUTPUT For Remote Totalization
TRANSMITTER HOUSING & DISPLAY ENCLOSURE: NEMA 4X (IP66)

MATERIALS

Remote mount display includes 50 feet of power/signal cable. For additional length, please consult factory.
BODY: 6-inch & larger: Fusion-bonded epoxy coated carbon steel
4-inch: All 304 stainless steel
MEASURING ELEMENT: 304 stainless steel

END CONNECTIONS

V2150: 6-inch & larger: Carbon Steel AWWA Class D;
4-inch: Raised Face ANSI Class 150
V2300: 6-inch and larger: Carbon Steel AWWA Class F;
4-inch: Raised Face ANSI Class 300

OPTIONS

- Other flange standards available
- Other laying lengths available
- Transmitter may be mounted on either side of the flow tube

Instrument orientation
(Specified at time of order)

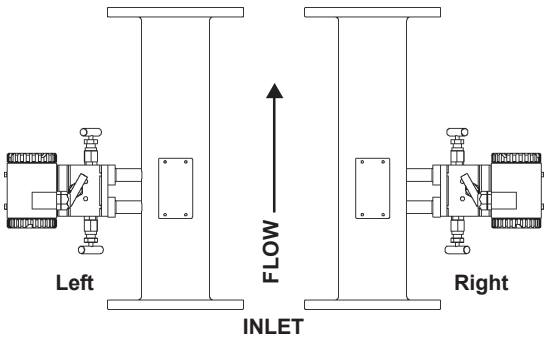

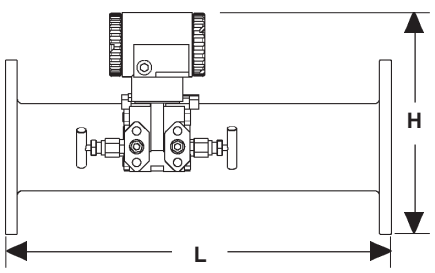

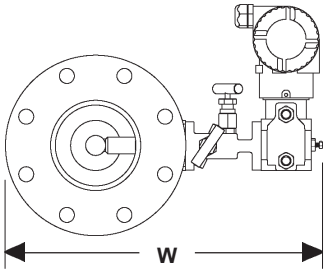

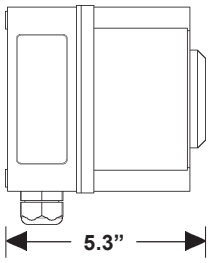

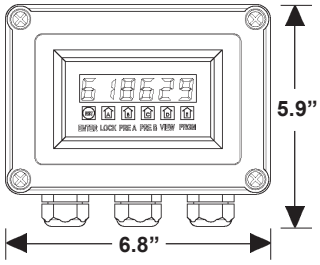

McCrometer reserves the right to change design specifications without notice.

Flow Computer

V2150 / V2300		DIMENSIONS							
Meter and Nominal Pipe Size		4	6	8	10	12	14	16	18
Standard Flow Ranges (GPM)	A	40-400	80-800	100-1000	120-1200	160-1600	200-2000	270-2700	300-3000
	B	60-600	120- 1200	150-1500	180-1800	250-2500	300-3000	400-4000	500-5000
	C	90-900	180-1800	225-2250	270-2700	375-3750	450-4500	600-6000	750-7500
V2150					V2150				
Approx. Shipping Weight - lbs.		54	115	135	197	325	465	530	744
W (width - inches)		17.75	20	22	24.5	27	28.5	30.75	32.5
H (height - inches)		13	14	15.4	16.6	19	21	23.5	25
L (length - inches)		20	28	34	38	42	44	46	50
No. of Bolts per Flange		8	8	8	12	12	12	16	16
V2300					V2300				
Approx. Shipping Weight - lbs.		90	145	220	340	430	650	820	1315
W (width - inches)		18.25	21	23	25.25	27.75	29.5	31.75	34
H (height - inches)		13.8	15	16.3	17.5	20.5	23	25.5	28
L (length - inches)		20	28	34	38	42	44	46	50
No. of Bolts per Flange		8	12	12	16	16	20	20	24

Note: *Larger meter sizes, special laying lengths, other flow ranges available by special order.*

ORDERING INFORMATION:
1. Select Nominal Pipe Size and one of the standard flow ranges A, B, or C.
2. Specify Instrument Orientation – Viewed from the inlet end of the meter, will the instrument(s) be on the right or left?
3. Specify units of measurement for both the flowrate indicator and totalizer.
4. For vertical installation, specify upflow or downflow.

3255 West Stetson Avenue • Hemet, CA 92545 USA
951-652-6811 / FAX 951-652-3078 • Web Site: www.mccrometer.com

©2006 by McCrometer/Printed in USA
Lit#24509-01 Rev. 2.7/08-06

McCROMETER

Flow
Measurement
Solutions
for Water &
Waste Water

VCONE

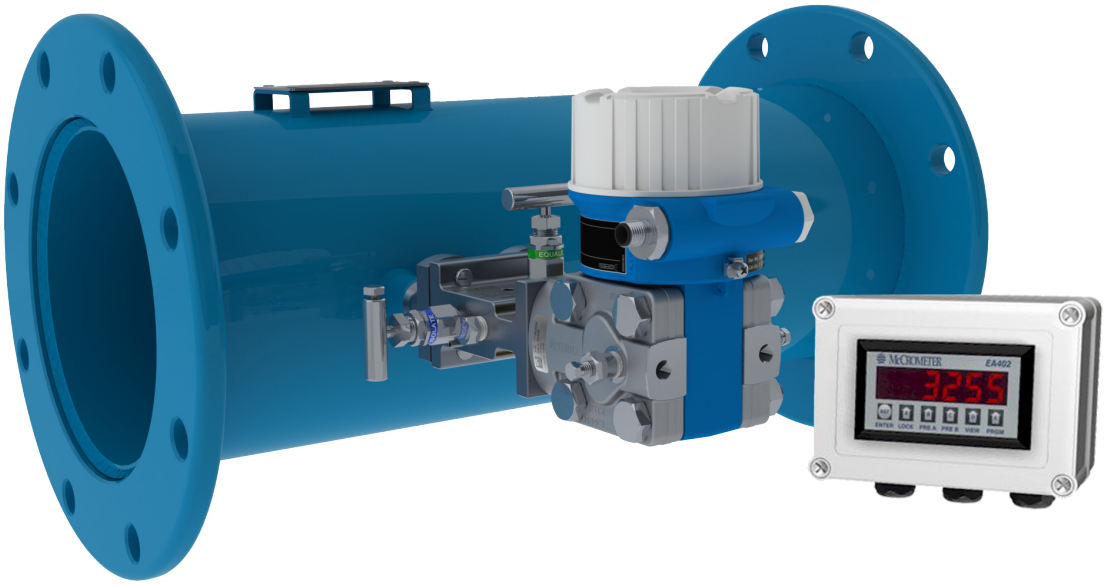

INSTALLATION OPERATION & MAINTENANCE MANUAL

Table of Contents

SECTION 1 - INTRODUCTION

Specifications 2
Dimensions 2
Flow Ranges 2

SECTION 2 - INSTALLATION

Flow Tube Installation - Direct Mount 3
Flow Tube Installation - Remote Mount 4
Upstream Piping 5
Remote Flow Indicator Installation 5
Wiring - Local Display 6
Wiring - Remote Display 6

SECTION 3 - START UP

Purging the System 7
Zeroing Local Display 7
Zeroing Remote Display 8

SECTION 4 - TROUBLESHOOTING

Changes in Flow Accuracy or Meter Operation: Tube 9
No Change in Flow Measurement or Flow Reading Inaccuracy: 3-Way Valve Manifold 9
Inaccurate or Erratic Flow Readings: Flow Transmitter 9
Inaccurate or Erratic Flow Readings: Flow Indicator 9

PARTS

Parts Identification 10

CONTACT INFORMATION 11

MANUFACTURER'S WARRANTY 12

Copyright © 2014 McCrometer, Inc. All printed material should not be changed or altered without permission of McCrometer. Any published technical data and instructions are subject to change without notice. Contact your McCrometer representative for current technical data and instructions.

McCROMETER

3255 WEST STETSON AVENUE • HEMET, CALIFORNIA 92545 USA
TEL: 951-652-6811 • 800-220-2279 • FAX: 951-652-3078

www.mccrometer.com
Printed In The U.S.A.
Lit. # 30121-60 Rev. 1.0/04-14

SECTION 1 - INTRODUCTION

The VM V-Cone Water and Waste Water Flow Meter System consists of a flanged Flow Tube, Flow Transmitter and Flow Indicator. The Flow Transmitter detects flow and transmits a 4-20mA signal proportional to the flow rate. The Flow Indicator converts the signal into a flow Rate and Total, displayed on an LED display. The flow indicator is either integrated to the flow transmitter or remote mounted from the meter body. The Flow Indicator outputs an auxiliary 4-20 mA signal and an open collector transistor alarm pulse assignable to Rate or Total. A 3-way-valve isolation manifold is standard.

PERFORMANCE

ACCURACY: ±0.5% of reading over standard flowrange
RANGE: See dimensions chart below
HEAD LOSS: Typical ≤ 2 psi at Full Scale
MAXIMUM TEMPERATURE: (Standard Construction) 180°F constant
PRESSURE RATING: 150 psi
300 psi
POWER: 24VDC, Remote Display 110 VAC
OUTPUTS: Analog 4-20mA
OPTICALLY ISOLATED PULSE OUTPUT for Remote Totalization
TRANSMITTER HOUSING & DISPLAY ENCLOSURE: NEMA 4X (IP66)

MATERIALS

Remote mount display includes 25 feet of power/signal cable. For additional length, please consult factory.
BODY: 6-inch & larger: Fusion-bonded epoxy coated carbon steel
4-inch & smaller: All 304 stainless steel
MEASURING ELEMENT: 304 stainless steel

END CONNECTIONS

150#: 6-inch & larger: Carbon Steel AWWA Class D;
4-inch & smaller: Raised Face ANSI Class 150
300#: 6-inch & larger: Carbon Steel AWWA Class F;
4-inch & smaller: Raised Face ANSI Class 300

OPTIONS

- Other flange standards available
- Other laying lengths available

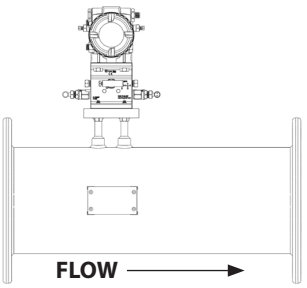

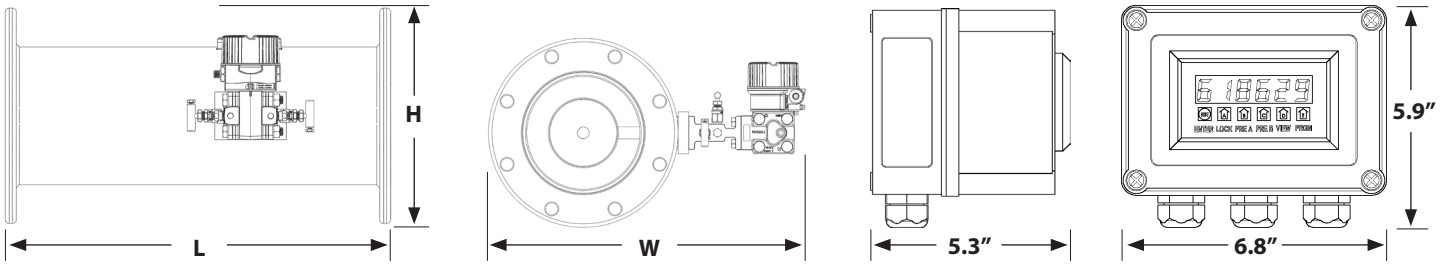

Remote Display w/ Enclosure

McCrometer reserves the right to change design specifications without notice.

Flow Range Chart												
Size (in)	2	3	4	6	8	10	12	14	16	18	20	24
Applicable Standard Flow Ranges * (GPM)	10-230	20-500	40-900	80-1800	100-2250	120-2700	160-3750	200-4500	270-6000	300-7500	350-9000	560-14000
150#							**150#**					
Approx. Shipping Weight - lbs.	24	39	54	115	135	197	325	465	530	744	920	1254
W (width - inches)	15	16.5	17.75	20	22	24.5	27	28.5	30.75	32.5	34.75	39
H (height - inches)	14	15	13	14	15.4	16.6	19	21	23.5	25	27.5	32
L (length - inches)	12	14	16	22	26	28	30	30	30	32	36	48
No. of Bolts per Flange	4	4	8	8	8	12	12	12	16	16	20	20
300#							**300#**					
Approx. Shipping Weight - lbs.	29	44	90	145	220	340	430	650	820	1315	1517	1917
W (width - inches)	15.5	17	18.25	21	23	25.25	27.75	29.5	31.75	34	36.25	41
H (height - Inches)	15	16	13.8	15	16.3	17.5	20.5	23	25.5	28	30.5	36
L (length - inches)	12	14	16	22	26	28	30	30	30	32	36	48
No. of Bolts per Flange	8	8	8	12	12	16	16	20	20	24	24	24

* Meter will be 10:1 flow range standard (i.e. 400 to 40 GPM)
NOTE: Larger meter sizes, special laying lengths, other flow ranges available by special order.

SECTION 2 - INSTALLATION

WARNING!
SERIOUS INJURY CAN RESULT FROM WORKING ON A LINE UNDER PRESSURE. Shut off the water and relieve the pressure from the line before attemping to install, remove or service the flow tube and/or the 3-way-valve manifold.

FLOW TUBE INSTALLATION - DIRECT MOUNT

1. Provide an adequate opening for the flow tube and gaskets. Allow enough room around the flow tube to access the instrumentation. Use only installation hardware that is appropriate for the process fluid, temperature and pressure.

2. Match the flow tube direction with the system flow - a Flow Direction Arrow is indicated on the flow tube Data Plate.

(Transmitter removed for clarity)

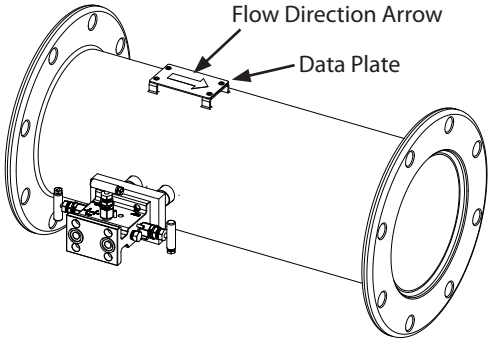

3. The meter body is always installed with the **Transmitter** connections on the side of the meter body kept in a horizontal orientation (see below).

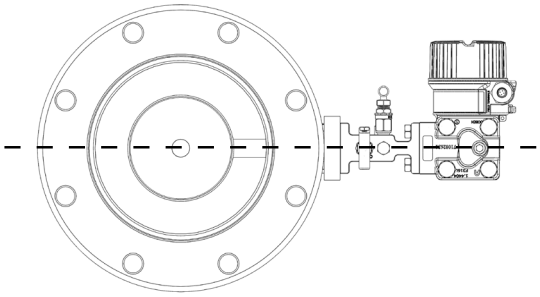

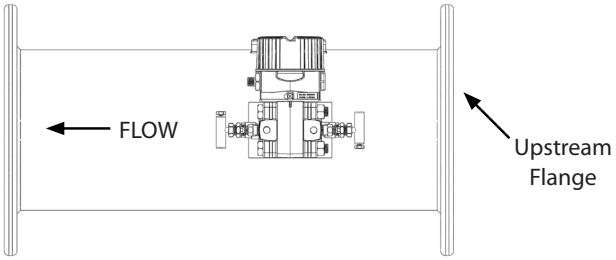

HORIZONTAL FLOW

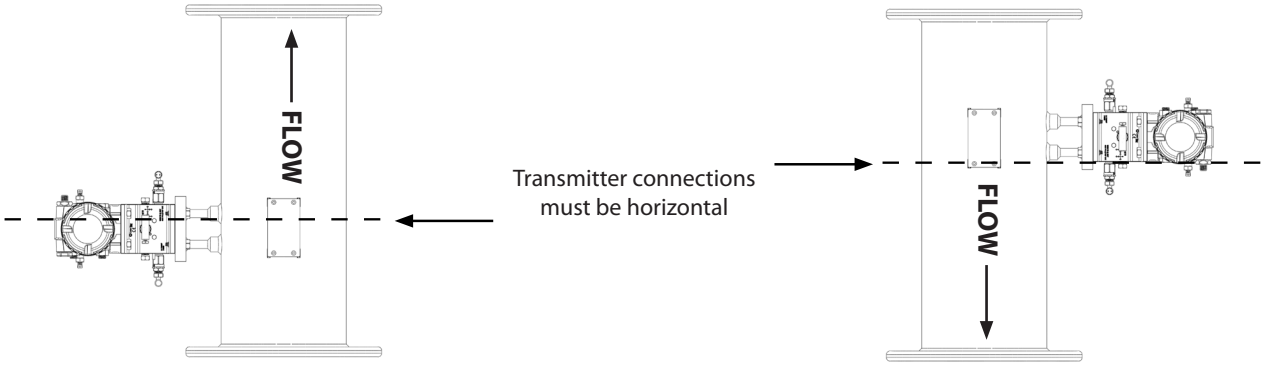

UPFLOW **DOWNFLOW**

VERTICAL FLOW

4. Direct mount transmitters can be used in vertical down applications when there is no entrained air. They can also be used in vertical up if there is no debris.

SECTION 2 - INSTALLATION (continued)

FLOW TUBE INSTALLATION - REMOTE MOUNT TRANSMITTER

1. The pressure taps shall be between horizontal centerline and 60˚ below centerline (3 o'clock to 5o o'clock or 7 o'clock to 9 o'clock). Taps at bottom dead-center may accumulate solids if they are present in the liquid; taps above the centerline will accumulate air or non-condensing gases. In neither case should the taps be more than 60˚ to the horizontal plane.

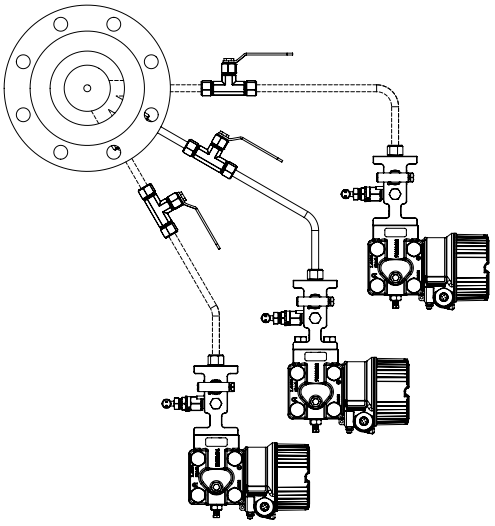

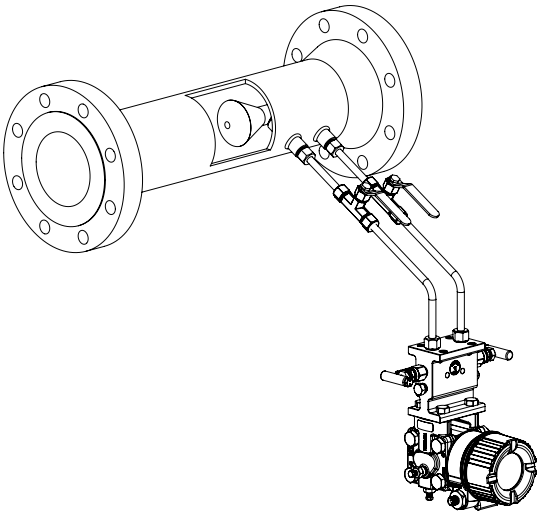

2. In vertical applications with entrained air or debris, it is recommended to use wall taps (Process Connection W must be selected). It is always best to install the transmitter below the pressure taps.

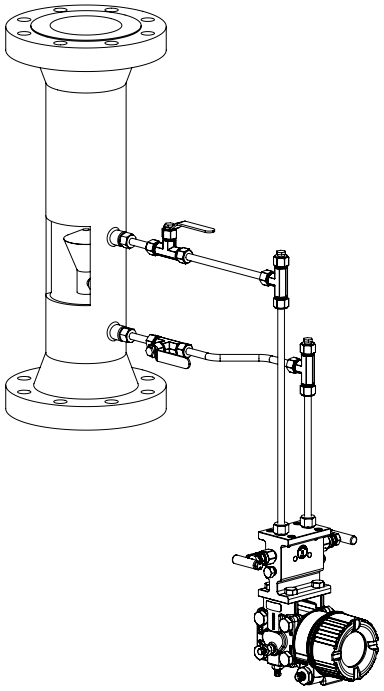

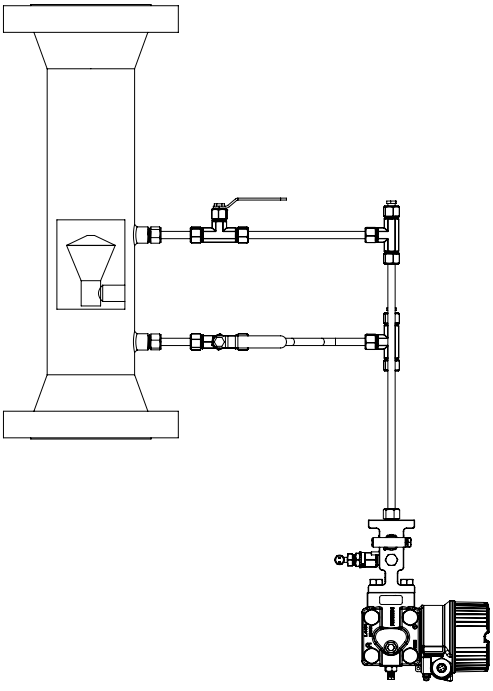

SECTION 2 - INSTALLATION (continued)

UPSTREAM PIPING

Some flow meter installations require longer upstream runs of straight pipe to lessen the effects of upstream turbulence. Turbulence can be caused by a variety of upstream conditions. Proper upstream straight pipe lengths (dimension D, below) will ensure accuracte flow measurement. Refer to the guide below for recommended upstream runs of straight pipe.

ACCEPTABLE DIRECT UPSTREAM PIPE CONNECTIONS

- Transitions from upstream pipe (schedules 10 to 80)
- Single Elbows
- Double Elbows
- Fully open Gate Valve
- Transitions from pipe inside diameters smaller than schedule 80; typically concrete lined pipe

PROVIDE UP TO 3 DIAMETERS UPSTREAM STRAIGHT PIPE IF ANY OF THESE CONDITIONS EXIST:

- Pumps
- Butterfly Valves
- Partially open Gate Valves
- Check Valves
- Strainers and Sand Separators

EXAMPLE: A 6" diameter meter with a butterfly valve upstream may need as much as 18" of straight pipe ("**D**") before the meter to ensure accuracy.

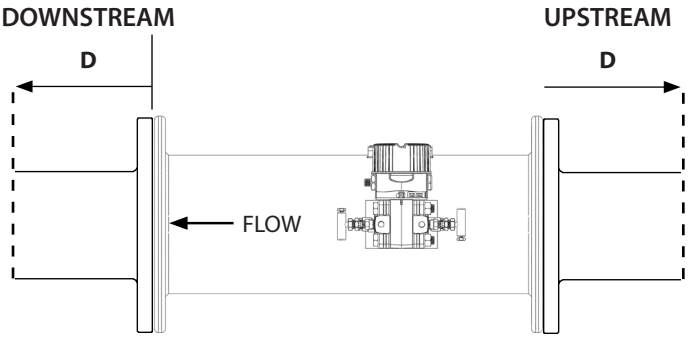

REMOTE FLOW INDICATOR INSTALLATION

Mount the Flow Indicator housing in a location that provides access, viewing, and it suitable for a NEMA 4X rated device. The Indicator is prewired to the Flow Meter Transmitter with 50 feet of cable for remote mounting. The housing mounting holes are located at the bottom of the indicator housing base, beneath the cover screws. *Not applicable for V-Cones with local flow indication.*

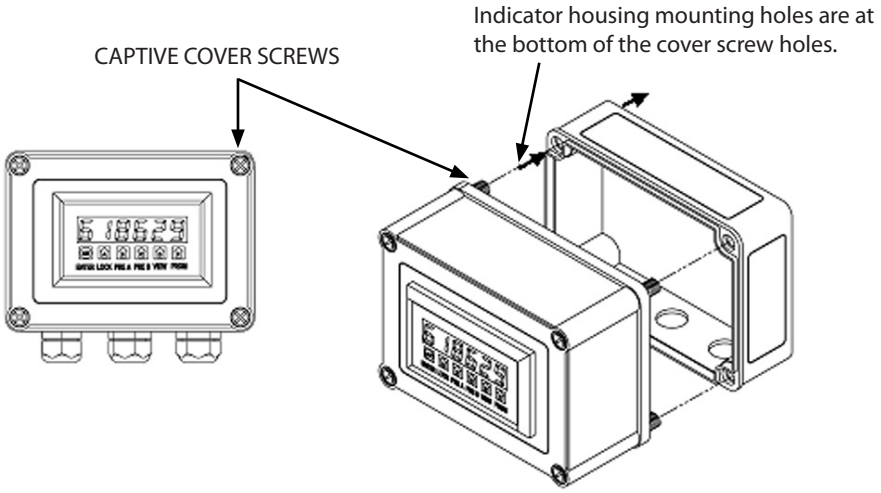

SECTION 2 - INSTALLATION (continued)

WIRING - LOCAL DISPLAY

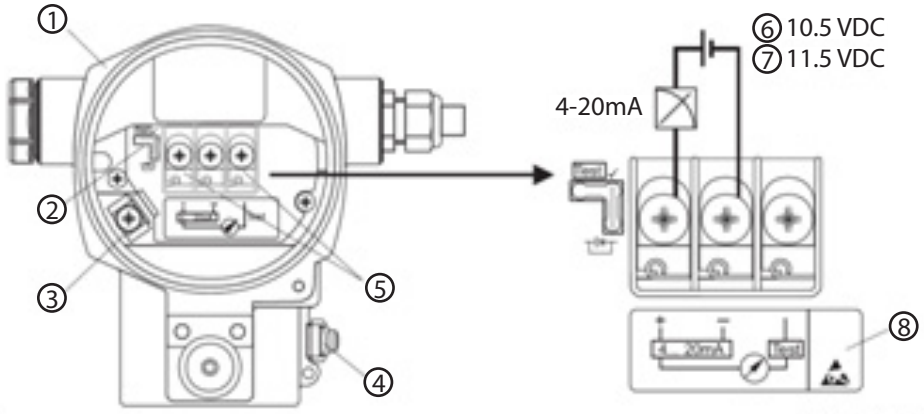

Electrical connection 4-20mA HART

1. Housing
2. Jumper for 4-20mA test signal
3. Internal ground terminal
4. External ground terminal
5. 4-20mA test signal between positve and test terminal
6. Minimum supply voltage = 10.5 VDC, jumper is set as illustrated in the diagram
7. Minimum supply voltage = 11.5 VDC, jumper is inserted in "Test" position
8. Devices with integrated overvoltage protection are labeled OVP (overvoltage protection)

WIRING - REMOTE DISPLAY

The flow meter is pre-wired to the Flow Indicator. The cable for the A/C power input should have an outside dimension (OD) at least as large as the provided cables to ensure proper sealing in the compression fitting.

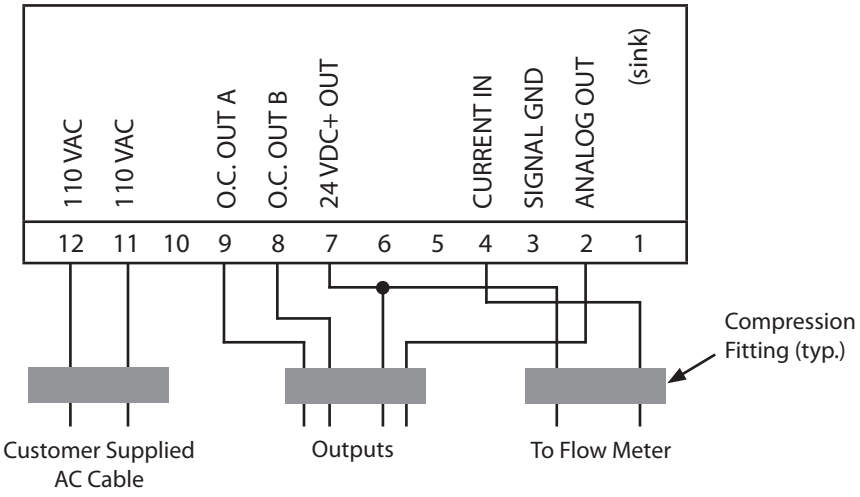

WIRE COLOR	
FLOW METER	
RED	(+)
BLACK	(-)
WHITE	(not used)
GREEN	(not used)
OUTPUTS	
RED	Analog (+)
BLACK	Signal Common (-)
WHITE	Preset A
GREEN	Preset B
BLACK	Signal Common (-)

Shared

INPUTS

110 VAC inputs are not polarized.

SECTION 3 - START UP

PURGING THE SYSTEM

1. Meter is shipped with valves in operating positions with both isolation valves open and cross valve closed.

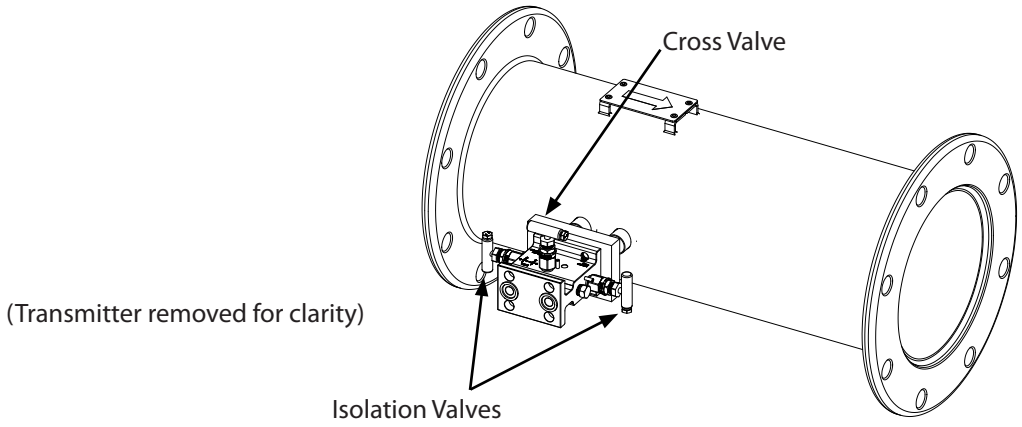

2. Start the flow. **Check all connections for leaks and correct as necessary before continuing.**

3. Open each vent screw (below) to purge any air from the system, and then close the vent screws.

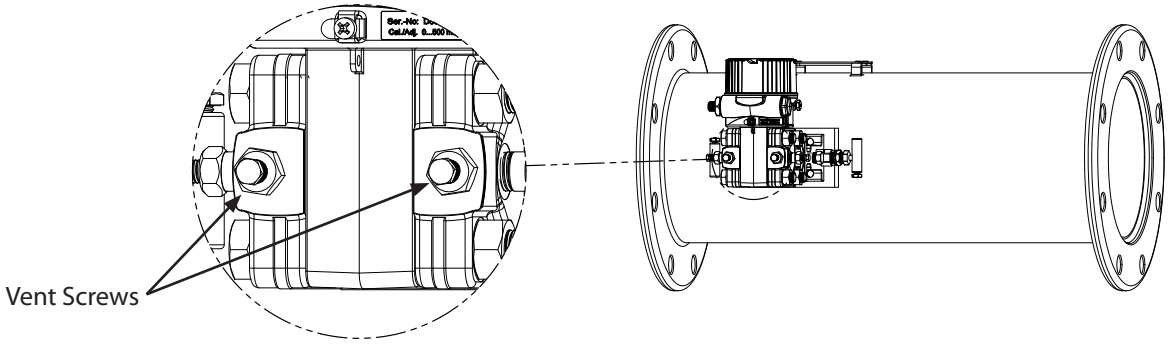

ZEROING LOCAL DISPLAY
(display on transmitter)

1. Close both isolation valves and open the cross over (equalizing) valve.
2. Remove the cap over the LCD display.
3. Press the enter key.
4. Press the up or down key until "Setup" is highlighted.
5. Press the enter key.
6. Press the up or down key until "Pos. zero adjust" is highlighted.
7. Press the enter key.
8. Press the down key and highlight "confirm".
9. Press the enter key
10. To return to operating mode press the up and down keys at the same time. Do this until you are in run mode.
11. Return the valves to operating positions. Both isolation valves open and cross over (equalizing) valve closed.

E ENTER KEY

\+ UP KEY

\- DOWN KEY

ZEROING REMOTE DISPLAY
(no display on transmitter)

1. Close both isolation valves and open cross over (equalizing) valve.
2. Remove the cap.
3. Press and hold the zero button (See figure below, item #7). **DO NOT PRESS THE SPAN BUTTON.**
4. Return the valves to operating positions. Both isolation valves open and cross over (equalizing) valve closed.

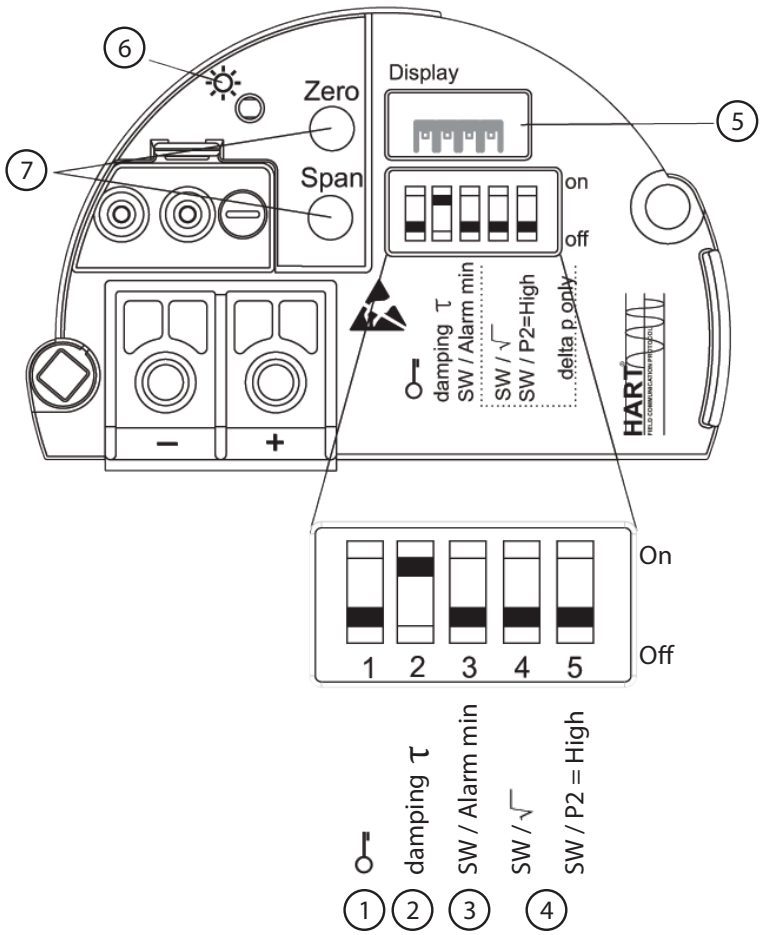

Item Number	Description
1	DIP switch for locking/unlocking parameters relevant to the measured value
2	DIP switch for switching damping on/off
3	DIP switch for alarm current SW / Alarm Min (3.6 mA)
4	DIP switch only for Deltabar M: Switch 4: "SW/Square root"; used to control the output characteristics Switch 5: "SW/P2-High"; used to determine the high-pressure side
5	Slot for optional local display
6	Green LED to indicate successful operation
7	Operating keys for lower range value (zero) and upper range value (span)

SECTION 4 - TROUBLESHOOTING

CHANGES IN FLOW ACCURACY OR METER OPERATION:
TUBE

1. Debris in the tube. Repeat the purging procedure (see PURGING THE SYSTEM page #7) to remove any dirt and/or air from the flow transmitter and manifold. Trash or debris may be caught inside the meter - removal and inspection of the interior of the meter body may be required.
2. Verify that the flow tube was designed for the expected flow rates (see SPECIFICATIONS page #2).
3. Less-than-full-pipe. Verify the pipe remains full at all times. Modify the piping or relocate the flow tube.

NO CHANGE IN FLOW MEASUREMENT OR FLOW READING INACCURACY:
3-WAY VALVE MANIFOLD

1. One or both ISOLATION VALVES not open. Keep them **FULLY OPEN** during operation.
2. The cross VALVE is not closed. Keep it **FULLY CLOSED** during operation.
3. Debris in the manifold. Repeat the purging procedure (see PURGING THE SYSTEM page #7).

INACCURATE OR ERRATIC FLOW READINGS:
FLOW TRANSMITTER

1. Debris in the transmitter. Repeat the purging procedure (see PURGING THE SYSTEM page #7). Debris in the transmitter may damage and/or permanently change its calibration.
2. Improper transmitter programming. Verify that the flow transmitter is on the correct meter.

   The flow transmitter is programmed by the factory for the flow rate specified by the customer. An Operation, Configuration and Calibration manual is shipped with the VM V-Cone System.

INACCURATE OR ERRATIC FLOW READINGS:
FLOW INDICATOR

1. Changes to the original settings. Contact the factory for the proper programming data.
2. Loose or improper wiring. Check all connections and verify the correct source voltage.
3. Line noise or electrical interference. Locate the indicator away from power lines, protect from power surges.

   The flow indicator is programmed by the factory for the flow rate and flow units specified by the customer. Flow Indicator program parameters are accessed after entering a factory default password of "1000". The user can verify and/or change the program parameters, assign a new password, and lockout the front panel to prevent further changes.
   More Flow Indicator information can be found in the EA402 IOM manual (included with the VM V-Cone System), or from the McCrometer website at www.mccrometer.com. The document number is 24508-68.

PARTS IDENTIFICATION

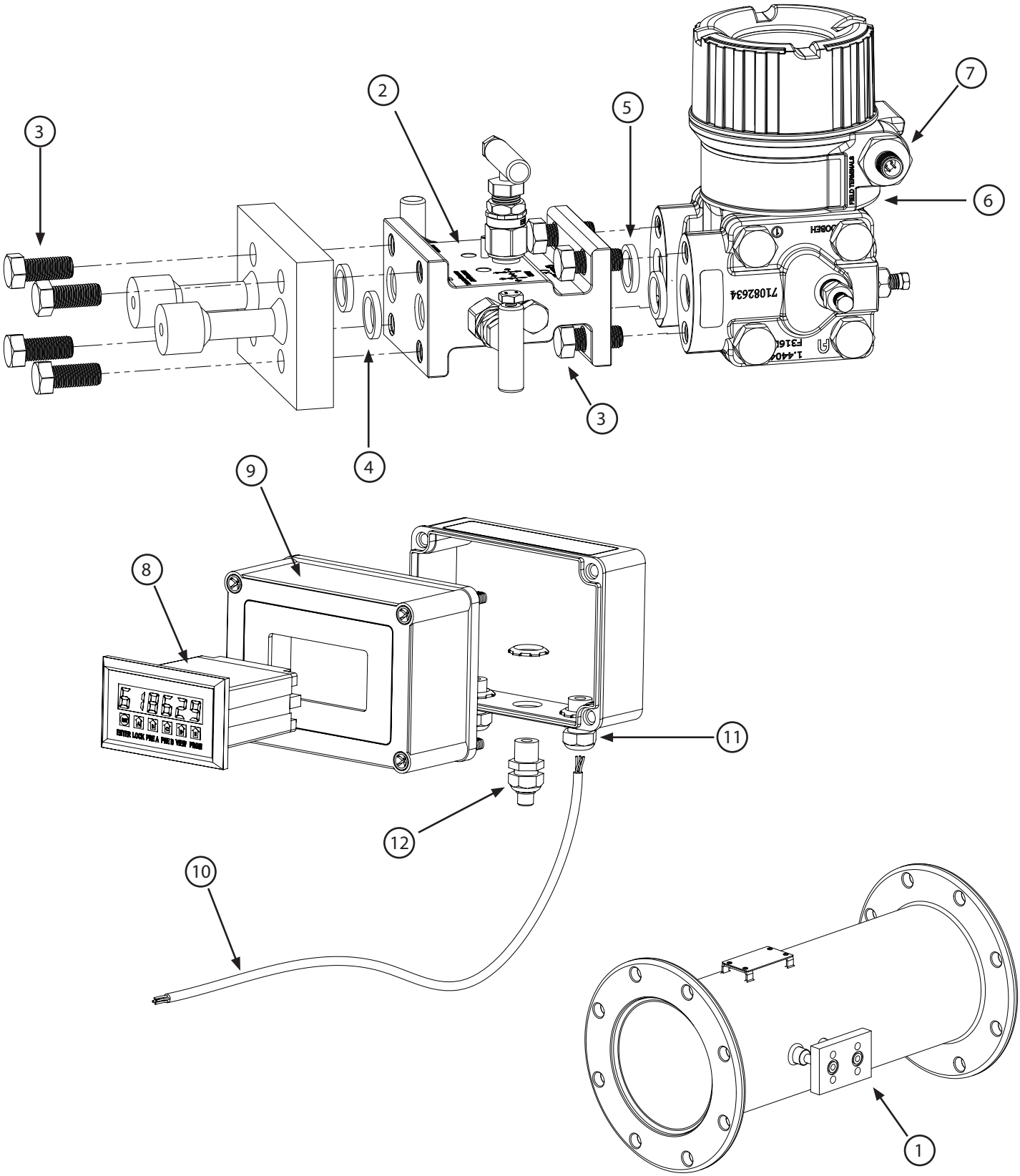

PARTS IDENTIFICATION (continued)

Drawing Number	Part Number	Description	Quantity Required	Comments
1	*	V-Cone Primary Element	1	
2	F1131	3-way Valve Isolation Manifold	1	Includes two ring seals
3	10299	Bolt, 7/16-20 x 1", Grade 5	8	
4	10300	Seal, Manifold-to-Meter	2	Included with 3-way Valve Manifold
5	10300	Seal, Transmitter-to-Manifold	2	Included with Flow Transmitter
6	DP124-xxx	Flow Transmitter	1	
7	EJ120-00	Compression fitting, 1/2" NPT	4	
8 - OPTIONAL	EA402-10	Flow Indicator	1	Remote Mount Display
9 - OPTIONAL	EA402-50	Indicator Housing	1	Includes 3 each EH445-00 and EJ120-00
10	EW550-00	Wire, 4-conductor Flow Meter-toFlow Indicator	300"	Not to be used for A/C source voltage
11	EH445-00	Lock nut, 1/2" NPT	3	
12	10771	Mushroom Plug	1	Seals output when not in use

* Part number varies by application flow rate and line size. Contact the factory for the correct part number.

CONTACT INFORMATION

Product information, pricing, and technical assistance is available from the McCrometer Customer Service Department at 951-652-6811.

Information on all McCrometer products is available on our website at www.mccrometer.com.

MANUFACTURER'S WARRANTY

This Warranty shall apply to and be limited to the original purchaser consumer of any McCrometer product. Meters or instruments defective because of faulty material or workmanship will be repaired or replaced, at the option of McCrometer, Inc., free of charge, FOB the factory in Hemet, California, within a period of one (1) year from the date of delivery.

Repairs or modifications by others than McCrometer, Inc. or their authorized representatives shall render this Warranty null and void in the event that factory examination reveals that such repair or modification was detrimental to the meter or instrument. Any deviations from the factory calibration require notification in writing to McCrometer, Inc. of such recalibrations or this warranty shall be voided.

In case of a claim under this Warranty, the claimant is instructed to contact McCrometer, Inc. 3255 West Stetson Ave., Hemet, California 92545, and to provide an identification or description of the meter or instrument, the date of delivery, and the nature of the problem.

The Warranty provided above is the only warranty made by McCrometer, Inc. with respect to its products or any parts thereof and is made expressly in lieu of any other warranties, by course of dealing, usages of trade or otherwise, expressed or implied, including but not limited to any implied warranties of fitness for any particular purpose or of merchantability under the uniform commercial code. It is agreed this warranty is in lieu of and buyer hereby waives all other warranties, guarantees or liabilities arising by law or otherwise. Seller shall not incur any other obligations or liabilities or be liable to buyer, or any customer of buyer for any anticipated or lost profits, incidental or consequential damages, or any other losses or expenses incurred by reason of the purchase, installation, repair, use or misuse by buyer or third parties of its products (including any parts repaired or replaced); and seller does not authorize any person to assume for seller any other liability in connection with the products or parts thereof. This Warranty cannot be extended, altered or varied except by a written instruction signed by seller and buyer.

This Warranty gives you specific legal rights, and you may also have other rights which vary from state to state.

McCrometer, Inc. reserves the right to make improvements and repairs on product components which are beyond the warranty period at the manufacturer's option and expense, without obligation to renew the expired warranty on the components or on the entire unit. Due to the rapid advancement of meter design technology, McCrometer, Inc. reserves the right to make improvements in design and material without prior notice to the trade.

All sales and all agreements in relation to sales shall be deemed made at the manufacturer's place of business in Hemet, California and any dispute arising from any sale or agreement shall be interpreted under the laws of the State of California.

OTHER McCROMETER PRODUCTS INCLUDE:

Propeller Meter	Propeller Flowmeters
Water Specialties Propeller Meter™	Propeller Flowmeters
Ultra Mag®	Magnetic Flowmeters
FPI Mag®	Magnetic Flowmeters
FPI-X™	Magnetic Flowmeters
SPI Mag™	Magnetic Flowmeters
Mag 3000™	Magnetic Flowmeters
McCrometer Connect™	Wireless Monitoring Systems
VCONE®	Differential Pressure Flowmeters
VM VCONE®	Differential Pressure Flowmeters
Wafer-Cone®	Differential Pressure Flowmeters

McCROMETER
3255 WEST STETSON AVENUE • HEMET, CALIFORNIA 92545 USA www.mccrometer.com
TEL: 951-652-6811 • 800-220-2279 • FAX: 951-652-3078 Printed In The U.S.A. Lit. # 30121-60 Rev. 1.0/04-14

Copyright © 2014 McCrometer, Inc. All printed material should not be changed or altered without permission of McCrometer. Any published technical data and instructions are subject to change without notice. Contact your McCrometer representative for current technical data and instructions.

Level Pressure Flow Temperature Liquid Analysis Registration Systems Components Services Solutions

Brief Operating Instructions

Deltabar M

PMD55

Differential pressure measurement

HART COMMUNICATION PROTOCOL

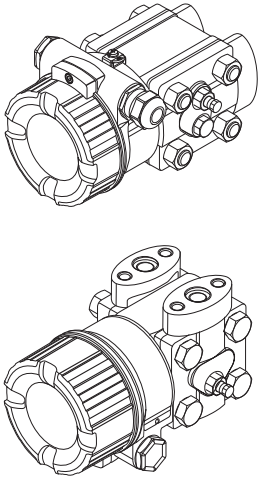

These Instructions are Brief Operating Instructions; they are not a substitute for the Operating Instructions pertaining to the device.
Detailed information about the device can be found in the Operating Instructions and the other documentation:

Available for all device versions via:
– Internet: www.endress.com/deviceviewer
– Smart phone/tablet: *Endress+Hauser Operations App*

KA01027P/00/EN/16.14
71269367

Endress+Hauser

People for Process Automation

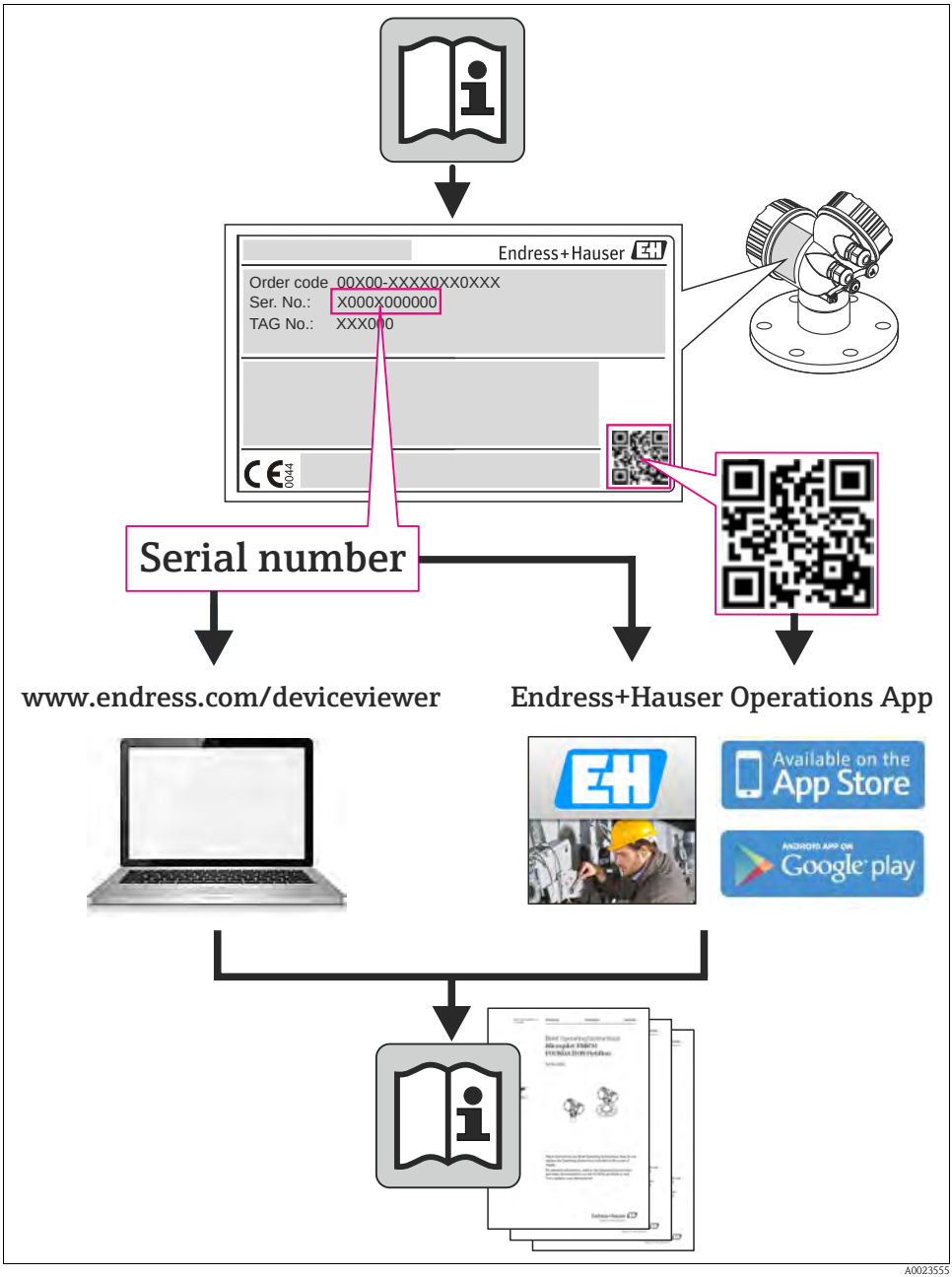
Endress+Hauser
Order code 00X00-XXXX0XX0XXX
Ser. No.: X000X000000
TAG No.: XXX000
Serial number
www.endress.com/deviceviewer
Endress+Hauser Operations App
Available on the App Store
Google play

A0023555

Table of contents

1 Safety instructions 4
1.1 Designated use 4
1.2 Installation, commissioning and operation 4
1.3 Operational safety and process safety 4
1.4 Return 5
1.5 Safety icons 5

2 Product identification. 5

3 Installation 5
3.1 Installation position 6
3.2 Closing the housing cover 8
3.3 Post-installation check 8

4 Wiring. 9
4.1 Connecting the device 9
4.2 Connecting the measuring unit 10
4.3 Potential equalization 10
4.4 Post-connection check 11

5 Operation 11
5.1 Operation without operating menu 11
5.2 Operation with operating menu 13

6 Commissioning 21
6.1 Commissioning without an operating menu 22
6.2 Commissioning with an operating menu 25
6.3 Position zero adjustment 26
6.4 Commissioning of Differential pressure measurement 27
6.5 Commissioning of Flow measurement 28
6.6 Commissioning of Level measurement 30

1 Safety instructions

1.1 Designated use

The Deltabar M is a differential pressure transmitter for measuring differential pressure, level and flow.

The manufacturer accepts no liability for damages resulting from incorrect use or use other than that designated.

1.2 Installation, commissioning and operation

- The device must only be installed, connected, commissioned and maintained by qualified and authorized specialists (e.g. electrical technicians) in full compliance with the instructions in this manual, the applicable norms, legal regulations and certificates (depending on the application).
- The specialist must have read and understood this manual and must follow the instructions it contains. If you are unclear on anything in these Brief Operating Instructions, you must read the Operating Instructions. The Operating Instructions provide detailed information on the device/measuring system.
- The device may only be modified or repaired if such work is expressly permitted in the Operating Instructions.
- If faults cannot be rectified, the device must be taken out of service and secured against unintentional commissioning.
- Do not operate damaged devices. Mark them as defective.

1.3 Operational safety and process safety

- Alternative monitoring measures must be taken to ensure operational safety and process safety during confiugration, testing and maintenance work on the device.
- The device is safely built and tested according to state-of-the-art technology and has left the factory in perfect condition as regards technical safety. The applicable regulations and European standards have been taken into account.
- Pay particular attention to the technical data on the nameplate.
- Devices for use in hazardous areas are fitted with an additional nameplate. If the device is to be installed in an explosion hazardous area, then the specifications in the certificate as well as all national and local regulations must be observed. The device is accompanied by separate "Ex documentation", which is an integral part of this Operating Instructions. The installation regulations, connection values and Safety Instructions listed in this Ex document must be observed. The documentation number of the related Safety Instructions is also indicated on the additional nameplate.
- If using devices for applications with safety integrity level, the separate manual on functional safety must be observed thoroughly.

1.4 Return

Follow the instructions on returning the device as outlined in the Operating Instructions.

1.5 Safety icons

Symbol	Meaning
	Warning! A warning highlights actions or procedures which, if not performed correctly, will lead to personal injury, a safety hazard or destruction of the instrument.
	Caution! Caution highlights actions or procedures which, if not performed correctly, may lead to personal injury or incorrect functioning of the instrument.
	Note! A note highlights actions or procedures which, if not performed correctly, may indirectly affect operation or may lead to an instrument response which is not planned.

2 Product identification

The following options are available for identification of the measuring device:
- Nameplate specifications
- Order code with breakdown of the device features on the delivery note
- Enter serial numbers from nameplates in W@M Device Viewer (www.endress.com/deviceviewer): All information about the measuring device is displayed.

For an overview of the technical documentation provided, enter the serial number from the nameplates in the W@M Device Viewer (www.endress.com/deviceviewer).

3 Installation

Note!
Disassembly of the screws with item number (1) is not permissible under any circumstances and will result in loss of warranty.

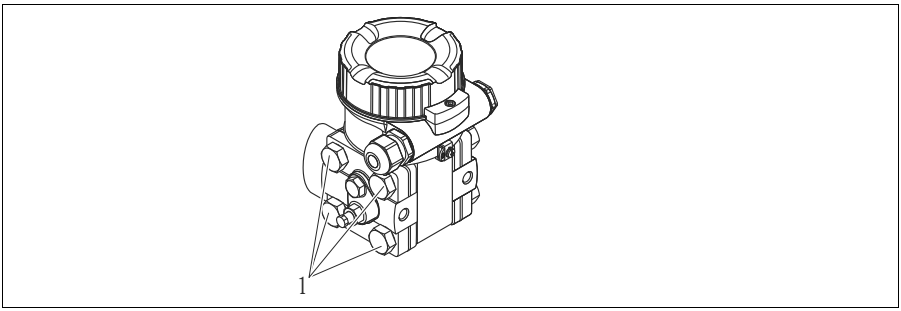

3.1 Installation position

Note!
- Due to the orientation of the Deltabar M, there may be a shift in the measured value, i.e. when the container is empty, the measured value does not display zero. You may correct this zero point shift by a position adjustment in one of the following ways:
  – via the operation keys on the electronics module (→ 13, "Function of the operating elements")
  – via the operating menu (→ 26, "Position zero adjustment")
- General recommendations for routing the impulse piping can be found in DIN 19210 "Methods for measurement of fluid flow; differential piping for flow measurement devices" or the corresponding national or international standards.
- Using a three-valve or five-valve manifold allows for easy commissioning, installation and maintenance without interrupting the process.
- When routing the impulse piping outdoors, ensure that sufficient anti-freeze protection is used, e.g. by using pipe heat tracing.
- Install the impulse piping with a monotonic gradient of at least 10%.
- Endress+Hauser offers a mounting bracket for installing on pipes or walls (see Operating Instructions BA00382P).

3.1.1 Installation position for flow measurement

Note!
For more information about differential pressure flow measurement refer to following documents:
- Differential pressure flow measurements with orifices: Technical Information TI00422P
- Differential pressure flow measurement with Pitot tubes: Technical Information TI00425P

Flow measurement in gases

- Mount the Deltabar M above the measuring point so that the condensate which may be present, can run off into the process piping.

Flow measurement in steam

- Mount the Deltabar M below the measuring point.
- Mount the condensate traps at the same level as the tapping points and at the same distance to the Deltabar M.
- Prior to commissioning, fill the impulse piping to the height of the condensate traps.

Flow measurement in liquids

- Mount the Deltabar M below the measuring point so that the impulse piping is always filled with liquid and gas bubbles can run back into the process piping.
- When measuring in media with solid parts, such as dirty liquids, installing separators and drain valves is useful for capturing and removing sediment.

3.1.2 Installation position for level measurement

Level measurement in an open container

- Mount the Deltabar M below the lower measuring connection so that the impulse piping is always filled with liquid.
- The low-pressure is open to atmospheric pressure.
- When measuring in media with solid parts, such as dirty liquids, installing separators and drain valves is useful for capturing and removing sediment.

Level measurement in a closed container

- Mount the Deltabar M below the lower measuring connection so that the impulse piping is always filled with liquid.
- Always connect the low-pressure above the maximum level.
- When measuring in media with solid parts, such as dirty liquids, installing separators and drain valves is useful for capturing and removing sediment.

Level measurement in a closed container with superimposed steam

- Mount the Deltabar M below the lower measuring connection so that the impulse piping is always filled with liquid.
- Always connect the low-pressure above the maximum level.
- A condensate trap ensures constant pressure on the low-pressure.
- When measuring in media with solid parts, such as dirty liquids, installing separators and drain valves is useful for capturing and removing sediment.

3.1.3 Installation position for differential pressure measurement

Differential pressure measurement in gases and steam

- Mount the Deltabar M above the measuring point so that the condensate which may be present, can run off into the process piping.

Differential pressure measurement in liquids

- Mount the Deltabar M below the measuring point so that the impulse piping is always filled with liquid and gas bubbles can run back into the process piping.
- When measuring in media with solid parts, such as dirty liquids, installing separators and drain valves is useful for capturing and removing sediment.

3.2 Closing the housing cover

Note!
When closing the housing cover, please ensure that the thread of the cover and housing are free from dirt, e.g. sand.If you feel any resistance when closing the cover, check the thread on both again to ensure that they are free from dirt.

3.3 Post-installation check

After installing the device, carry out the following checks:
- Are all screws firmly tightened?
- Are the housing covers screwed down tight?
- Are all locking screws and vent valves firmly tightened?

4 Wiring

4.1 Connecting the device

Note!

- When using the measuring device in hazardous areas, installation must comply with the corresponding national standards and regulations and the Safety Instructions or Installation or Control Drawings.
- A suitable circuit breaker has to be provided for the device in accordance with IEC/EN 61010.
- Devices with integrated overvoltage protection must be earthed.
- Protective circuits against reverse polarity, HF influences and overvoltage peaks are integrated.

The procedure

1. Check if the supply voltage matches the specified supply voltage on the nameplate.
2. Switch off the supply voltage before connecting the device.
3. Remove housing cover.
4. Guide cable through the gland. Preferably use twisted, screened two-wire cable.
5. Connect device in accordance with the following diagram.
6. Screw down housing cover.
7. Switch on supply voltage.

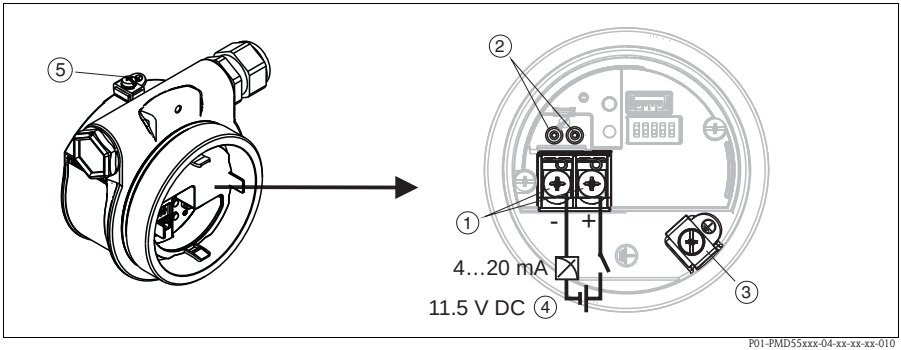

Electrical connection 4...20 mA HART

1 Terminals for supply voltage and signal
2 Test terminals
3 Grounding terminal
4 Supply voltage: 11,5 ... 45 VDC (versions with plug connectors: 35 V DC)
5 External ground terminal

4.2 Connecting the measuring unit

4.2.1 Supply voltage

Note!
- When using the measuring device in hazardous areas, installation must comply with the corresponding national standards and regulations and the Safety Instructions or Installation or Control Drawings.
- All explosion protection data are given in separate documentation which is available upon request. The Ex documentation is supplied as standard with all devices approved for use in explosion hazardous areas.

Electronic version	
4 to 20 mA HART, for non-hazardous areas	11.5 to 45 V DC (versions with plug-in connector 35 V DC)

Taking 4 to 20 mA test signal

A 4 to 20 mA test signal may be measured via the test terminals without interrupting the measurement.
To keep the corresponding measured error below 0.1%, the current measuring device should exhibit an internal resistance of $< 0.7\ \Omega$.

4.2.2 Cable specification

- Endress+Hauser recommends using twisted, shielded two-wire cables.
- Terminals for wire cross-sections 0.5 to 2.5 mm^2 (20 to 14 AWG)
- Cable outer diameter: 5 to 9 mm (0.2 to 0.35 in) depends on the used cable gland (see technical information)

4.2.3 Shielding/potential equalization

- You achieve optimum shielding against disturbances if the shielding is connected on both sides (in the cabinet and on the device). If potential equalization currents are expected in the plant, only ground shielding on one side, preferably at the transmitter.
- When using in hazardous areas, you must observe the applicable regulations.
  Separate Ex documentation with additional technical data and instructions is included with all Ex systems as standard.

4.3 Potential equalization

Hazardous area applications: Connect all devices to the local potential equalization.
Observe the applicable regulations.

4.4 Post-connection check

Perform the following checks after completing electrical installation of the device:
- Does the supply voltage match the specifications on the nameplate?
- Is the device connected as per Section 3.1?
- Are all screws firmly tightened?
- Are the housing covers screwed down tight?

As soon as voltage is applied to the device, the green LED on the electronic insert lights up for a few seconds or the connected local display lights up.

5 Operation

5.1 Operation without operating menu

5.1.1 Position of operating elements

The operating keys and DIP switches are located on the electronic insert in the device.

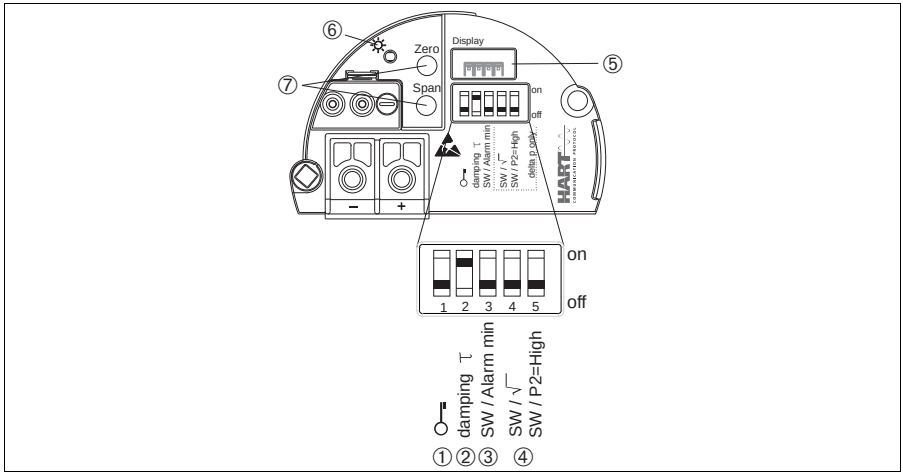

P01-Mxxxxxxx-19-xx-xx-xx-001

Fig. 1: HART electronic insert

1 DIP switch for locking/unlocking parameters relevant to the measured value
2 DIP switch for switching damping on/off
3 DIP switch for alarm current SW / Alarm Min (3.6 mA)
4 DIP switch:
Switch 4: "SW/Square root"; used to control the output characteristics
Switch 5: "SW/P2-High"; used to determine the high-pressure side
5 Slot for optional local display
6 Green LED to indicate successful operation
7 Operating keys for lower range value (zero) and upper range value (span)

Function of the DIP switches

Switches	Symbol/ labeling	Switch position	
		"off"	"on"
1		The device is unlocked. Parameters relevant to the measured value can be modified.	The device is locked [1]. Parameters relevant to the measured value cannot be modified.
2	damping τ	Damping is switched off. The output signal follows measured value changes without any delay.	Damping is switched on. The output signal follows measured value changes with the delay time τ.[2]
3	SW/Alarm min	The alarm current is defined by the setting in the operating menu. ("Setup" -> "Extended setup" -> "Curr. output" -> "Output fail mode")	The alarm current is 3.6 mA regardless of the setting in the operating menu.
4	SW/√	The output characteristics is defined by the setting in the operating menu. ■ "Setup" -> "Measuring mode" ■ "Setup" -> "Extended Setup" -> "Current output" -> "Linear/Sqroot"	The measuring mode is "flow" and the output characterisitcs is "Square root" regardless of the settings in the operating menu.
5	SW/P2= High	The high-pressure side is defined by the setting in the operating menu. ("Setup" -> "High Press. Side")	The high-pressure side is allocated to the P2 pressure connection regardless of the setting in the operating menu.

1) If operation is locked by means of the DIP switch, you can only unlock operation again by means of the DIP switch. If operation is locked by means of the operating menu, you can only unlock operation again using the operating menu.

2) The value for the delay time can be configured via the operating menu ("Setup" -> "Damping").
Factory setting: $\tau = 2$ s or as per order specifications.

Function of the operating elements

Operating key(s)	Meaning
"Zero" pressed for at least 3 seconds	**Get LRV** ■ **"Pressure" measuring mode** The pressure present is accepted as the lower range value (LRV). ■ **"Level" measuring mode, "In pressure" level selection, "Wet" calibration mode** The pressure present is assigned to the lower level value ("Empty calibration"). ✎ Note! No function is assigned to the key if level selection = "In height" and/or calibration mode = "Dry" ■ **"Flow" measuring mode** There is no function allocated to the "Zero" key.
"Span" pressed for at least 3 seconds	**Get URV** ■ **"Pressure" measuring mode** The pressure present is accepted as the upper range value (LRV). ■ **"Level" measuring mode, "In pressure" level selection, "Wet" calibration mode** The pressure present is assigned to the upper level value ("Full calibration"). ✎ Note! No function is assigned to the key if level selection = "In height" and/or calibration mode = "Dry" ■ **"Flow" measuring mode** The pressure present is accepted as the maximum pressure ("Max. pressure flow") and allocated to the maximum flow ("max. flow").
"Zero" and **"Span"** pressed simultaneously for at least 3 seconds	**Position adjustment** The sensor characteristic curve is shifted such that the pressure present becomes the zero value.

5.2 Operation with operating menu

5.2.1 Operation concept

The operation concept makes a distinction between the following user roles:

User role	Meaning
Operator	Operators are responsible for the devices during normal "operation". This is usually limited to reading process values either directly at the device or in a control room. If the work with the devices extends beyond value read-off tasks, the tasks involve simple, application-specific functions that are used in operation. Should an error occur, these users simple forward the information on the errors but do not intervene themselves.
Service engineer/technician	Service engineers usually work with the devices in the phases following device commissioning. They are primarily involved in maintenance and troubleshooting activities for which simple settings have to be made at the device. Technicians work with the devices over the entire life cycle of the product. Thus, commissioning and advanced settings and configurations are some of the tasks they have to carry out.
Expert	Experts work with the devices over the entire product life cycle, but their device requirements are often extremely high. Individual parameters/functions from the overall functionality of the devices are required for this purpose time and again. In addition to technical, process-oriented tasks, experts can also perform administrative tasks (e.g. user administration). "Experts" can avail of the entire parameter set.

5.2.2 Structure of the operating menu

User role	Submenu	Meaning/use
Operator	Language	Only consists of the "Language" parameter (000) where the operating language for the device is specified. The language can always be changed even if the device is locked.
Operator	Display/operat.	Contains parameters that are needed to configure the measured value display (selecting the values displayed, display format, display contrast, etc.). With this submenu, users can change the measured value display without affecting the actual measurement.
Service engineer/ technician	Setup	Contains all the parameters that are needed to commission measuring operations. This submenu has the following structure: ■ **Standard setup parameters** A wide range of parameters, which can be used to configure a typical application, is available at the start. The measuring mode selected determines which parameters are available. After making settings for all these parameters, the measuring operation should be completely configured in the majority of cases. ■ **"Extended setup" submenu** The "Setup" submenu contains additional parameters for more in-depth configuration of the measurement operation to convert the measured value and to scale the output signal. This menu is split into additional submenus depending on the measuring mode selected.
Service engineer/ technician	Diagnosis	Contains all the parameters that are needed to detect and analyze operating errors. This submenu has the following structure: ■ **Diagnostic list** Contains up to 10 error messages currently pending. ■ **Event logbook** Contains the last 10 error messages (no longer pending). ■ **Instrument info** Contains information on the device identification. ■ **Measured values** Contains all the current measured values ■ **Simulation** Is used to simulate pressure, level, flow, current and alarm/warning. ■ **Reset**
Expert	Expert	Contains all the parameters of the device (including those in one of the submenus). The "Expert" submenu is structured by the function blocks of the device. It thus contains the following submenus: ■ **System** Contains all the device parameters that neither affect measurement nor integration into a distributed control system. ■ **Measurement** Contains all the parameters for configuring the measurement. ■ **Output** Contains all the parameters for configuring the current output. ■ **Communication** Contains all the parameters for configuring the HART interface. ■ **Application** Contains all the parameters for configuring the functions that go beyond the actual measurement (e.g. totalizer). ■ **Diagnosis** Contains all the parameters that are needed to detect and analyze operating errors.

5.2.3 Operation with device display (optional)

A 4-line liquid crystal display (LCD) is used for display and operation. The local display shows measured values, dialog texts, fault messages and notice messages.
For easy operation the display can be taken out of the housing (see figure steps 1 to 3). It is connected to the device through a 90 mm (3.54 in) cable.
The display of the device can be turned in 90° stages (see figure steps 4 to 6).
Depending on the orientation of the device, this makes it easy to operate the device and read the measured values.

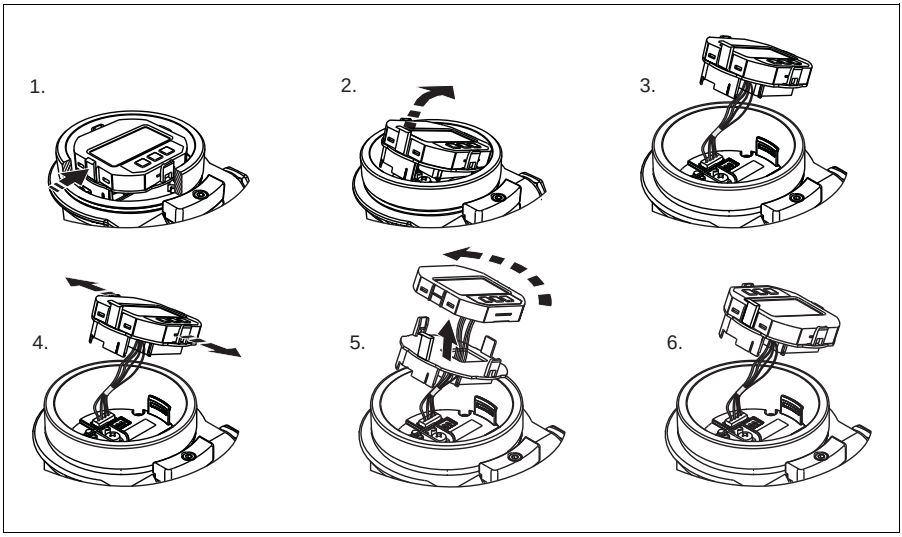

P01-Mxxxxxxx-19-xx-xx-xx-008

Functions:

- 8-digit measured value display including sign and decimal point, bargraph for 4 to 20 mA HART as current display
- Three keys for operation
- Simple and complete menu guidance as parameters are split into several levels and groups
- Each parameter is given a 3-digit parameter code for easy navigation
- Possibility of configuring the display to suit individual requirements and preferences, such as language, alternating display, contrast setting, display of other measured values such as sensor temperature etc.
- Comprehensive diagnostic functions (fault and warning message etc.)

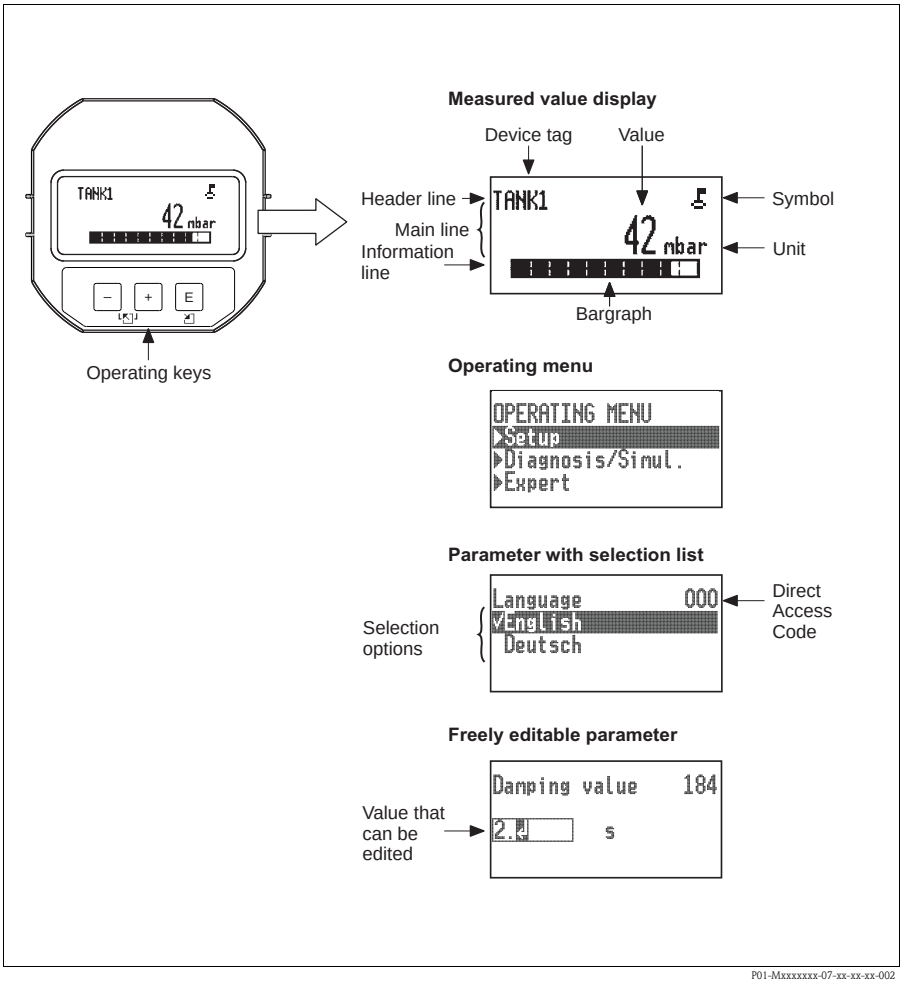

P01-Mxxxxxxx-07-xx-xx-xx-002

Display symbols

Symbol	Meaning
	Lock symbol The operation of the device is locked. To unlock the device, → 20, Locking/unlocking operation.
	Communication symbol Data transfer via communication
	Square root symbol Active measuring mode "Flow measurement" The root flow signal is used for the current output.
	Error message "Out of specification" The device is being operated outside its technical specifications (e.g. during warmup or cleaning processes).
	Error message "Service mode" The device is in the service mode (during a simulation, for example).
	Error message "Maintenance required" Maintenance is required. The measured value remains valid.
	Error message "Failure detected" An operating error has occurred. The measured value is no longer valid.

Operating keys on the display and operating module

Operating key(s)	Meaning
+	– Navigate downwards in the picklist – Edit the numerical values and characters within a function
−	– Navigate upwards in the picklist – Edit the numerical values and characters within a function
E	– Confirm entry – Jump to the next item – Selection of a menu item and activation of the editing mode
+ and E	Contrast setting of local display: darker
− and E	Contrast setting of local display: brighter
+ and −	ESC functions: – Exit the edit mode for a parameter without saving the changed value. – You are in a menu at a selection level. Each time you press the keys simultaneously, you go up a level in the menu.

Parameters with a picklist

Example: selecting "Deutsch" as the language of the menu.

Local display	Operation
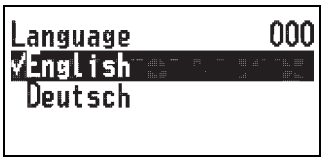 P01-PMD55xxx-19-xx-xx-xx-002	"English" is set as the menu language (default value). A ✓ in front of the menu text indicates the active option.
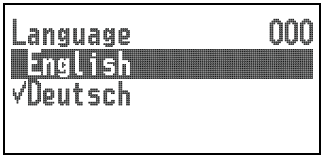 P01-PMD55xxx-19-xx-xx-xx-001	Select "Deutsch" with "+" or "–" .
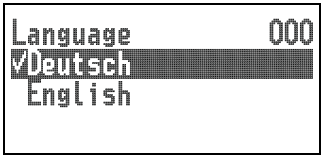 P01-PMD55xxx-19-xx-xx-xx-000	1. Confirm your choice with "E". A ✓ in front of the menu text indicates the active option. ("Deutsch" is now selected as the menu language.) 2. Exit the edit mode for the parameter with "E" .

User-definable parameters

Example: setting "Set URV" parameter from 100 mbar (1.5 psi) to 50 mbar (0.75 psi) .

Local display	Operation
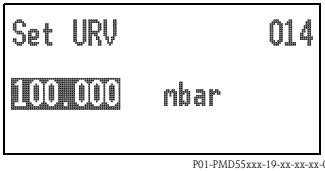 P01-PMD55xxx-19-xx-xx-xx-003	The local display shows the parameter to be changed. The value highlighted in black can be changed. The "mbar" unit is specified in another parameter and cannot be modified here.
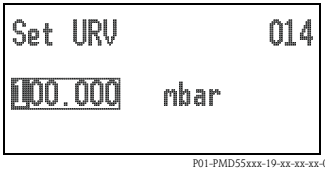 P01-PMD55xxx-19-xx-xx-xx-004	1. Press "+" or "–" to get to the editing mode. 2. The first digit is highlighted in black.

Local display	Operation
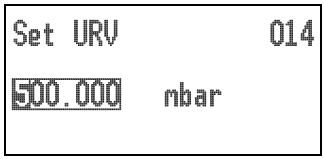 P01-PMD55xxx-19-xx-xx-xx-005	1. Use "+" to change "1" to "5". 2. Confirm "5" with "E". The cursor jumps to the next position (highlighted in black). 3. Confirm "0" with "E" (second position).
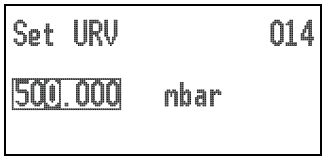 P01-PMD55xxx-19-xx-xx-xx-006	The third position is highlighted in black and can now be edited.
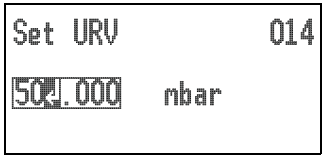 P01-PMD55xxx-19-xx-xx-xx-007	1. Switch to the "↵" symbol with the "-" key. 2. Use "E" to save the new value and exit the editing mode. → See next graphic.
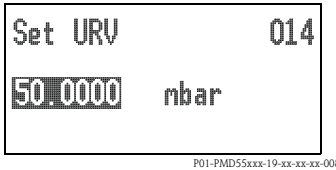 P01-PMD55xxx-19-xx-xx-xx-008	The new value for the upper range value is 50.0 mbar (0.75 psi). – You exit the edit mode for the parameter with "E" . – You can get back to the editing mode with "+" or "–".

Accepting the pressure present

Example: setting position adjustment

Local display	Operation
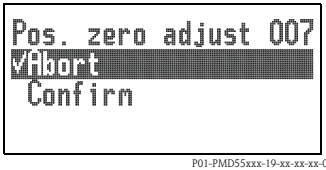 P01-PMD55xxx-19-xx-xx-xx-009	The pressure for position adjustment is present at the device.

Local display	Operation
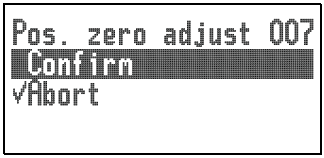 P01-PMD55xxx-19-xx-xx-xx-010	Use "+" or "–" to switch to the "Confirm" option. The active option is highlighted in black.
P01-PMD55xxx-19-xx-xx-xx-011	Accept the pressure present as position adjustment with the "E" key. The device confirms the adjustment and goes back to the "Pos. zero adjust" parameter.
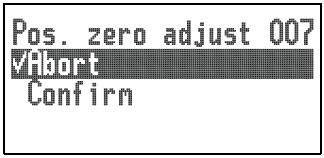 P01-PMD55xxx-19-xx-xx-xx-009	Exit the edit mode for the parameter with "E" .

5.2.4 Locking/unlocking operation

Once you have entered all the parameters, you can lock your entries against unauthorized and undesired access.
Locked operation is indicated as follows:
- By the symbol on the onsite display
- The parameters are grayed out in FieldCare and the HART handheld terminal, which means they cannot be edited. Indicated in the corresponding "Locking" parameter.

Parameters which refer to how the display appears, e.g. "Language" and "Display contrast", can still be altered.

Note!
If operation is locked by means of the DIP switch, you can only unlock operation again by means of the DIP switch. If operation is locked by means of the operating menu, you can only unlock operation again using the operating menu.

The "Operator code" parameter is used to lock and unlock the device.

Parameter name	Description
Operator code (021) Entry Menu path: Setup → Extended setup → Operator code	Use this function to enter a code to lock or unlock operation. **User input:** ■ To lock: Enter a number ≠ the release code (value range: 1 up to 9999). ■ To unlock: Enter the release code. ✎ Note! The release code is "0" in the order configuration. Another release code can be defined in the "Code definition" parameter. If the user has forgotten the release code, it can be made visible again by entering the number sequence "5864". **Factory setting:** 0

The release code is defined in the "Code definition" parameter.

Parameter name	Description
Code definition (023) Entry Menu path: Setup → Extended setup → Code definition	Use this function to enter a release code with which the device can be unlocked. **User input:** ■ A number between 0 and 9999 **Factory setting:** 0

6 Commissioning

⚠ Warning!
- If a pressure smaller than the minimum permitted pressure or greater than the maximum permitted pressure is present at the device, the following messages are output in succession:
  1. "S140 Working range P" or "F140 Working range P"
  2. "S841 Sensor range" or "F841 Sensor range"[1)]
  3. "M431 Adjustment" or "F431 Sensor range"[1]

✎ Note!
The device is configured for the Pressure measuring mode as standard. The measuring range and the unit in which the measured value is transmitted correspond to the specifications on the nameplate.

1) depending on the setting in the "Alarm behavior" (050) parameter

6.1 Commissioning without an operating menu

6.1.1 Pressure measuring mode

If no local display is connected, the following functions are possible by means of the keys on the electronic insert:
- Position adjustment (zero point correction)
- Setting lower range value and upper range value
- Device reset

Note!
- Operation must be unlocked. → 20, "Locking/unlocking operation"
- The device is configured for the "Pressure" measuring mode as standard. You can switch measuring modes by means of the "Measuring mode" parameter. → 25, "Measuring mode selection"
- The pressure applied must be within the nominal pressure limits of the sensor. See information on the nameplate.

Carrying out position adjustment.[1]	
Pressure is present at device.	
↓	
Press the "Zero" and "Span" keys simultaneously for at least 3 s.	
↓	
Does the LED on the electronic insert light up briefly?	
Yes	No
↓	↓
Applied pressure for position adjustment has been accepted.	Applied pressure for position adjustment has not been accepted. Observe the input limits.

Setting lower range value.	
Desired pressure for lower range value is present at device.	
↓	
Press the "Zero" key for at least 3 s.	
↓	
Does the LED on the electronic insert light up briefly?	
Yes	No
↓	↓
Applied pressure for lower range value has been accepted.	Applied pressure for lower range value has not been accepted. Observe the input limits.

Setting upper range value.	
Desired pressure for upper range value is present at device.	
↓	
Press the "Span" key for at least 3 s.	
↓	
Does the LED on the electronic insert light up briefly?	
Yes	No
↓	↓
Applied pressure for upper range value has been accepted.	Applied pressure for upper range value has not been accepted. Observe the input limits.

1) Observe warning on commissioning (→ 21)

6.1.2 Level measuring mode

The following functions are possible by means of the keys on the electronic insert:
- Position adjustment (zero point correction)
- Setting the lower and upper pressure value and assigning to the lower and upper level value

- Device reset

Note!

- The "Zero" and "Span" keys only have a function with the following setting:
  – "Level selection" = "In pressure", "Calibration mode" = "Wet"
  The keys have no function in other settings.
- The device is configured for the "Pressure" measuring mode as standard. You can switch measuring modes by means of the "Measuring mode" parameter. → 25, "Measuring mode selection"
  The following parameters are set to the following values at the factory:
  – "Level selection" = "In pressure"
  – "Calibration mode": wet
  – "Output unit": %
  – "Empty calib.": 0.0
  – "Full calib.": 100.0
  – "Set LRV": 0.0 (corresponds to 4 mA value)
  – "Set URV": 100.0 (corresponds to 20 mA value)
- Operation must be unlocked. → 20, "Locking/unlocking operation".
- The pressure applied must be within the nominal pressure limits of the sensor. See information on the nameplate.

Carrying out position adjustment.[1)]		**Setting lower pressure value.**		**Setting upper pressure value.**	
Pressure is present at device.		Desired pressure for lower pressure value ("empty pressure") is present at device.		Desired pressure for upper pressure value ("full pressure") is present at device.	
↓		↓		↓	
Press the "Zero" and "Span" keys simultaneously for at least 3 s.		Press the "Zero" key for at least 3 s.		Press the "Span" key for at least 3 s.	
↓		↓		↓	
Does the LED on the electronic insert light up briefly?		Does the LED on the electronic insert light up briefly?		Does the LED on the electronic insert light up briefly?	
Yes	No	Yes	No	Yes	No
↓	↓	↓	↓	↓	↓
Applied pressure for position adjustment has been accepted.	Applied pressure for position adjustment has not been accepted. Observe the input limits.	The pressure present was saved as the lower pressure value ("empty pressure") and assigned to the lower level value ("empty calibration").	The pressure present was not saved as the lower pressure value. Observe the input limits.	The pressure present was saved as the upper pressure value ("full pressure") and assigned to the upper level value ("full calibration").	The pressure present was not saved as the upper pressure value. Observe the input limits.

1) Observe warning on commissioning (→ 21)

6.1.3 Flow measuring mode

The following functions are possible by means of the keys on the electronic insert:
- Position adjustment (zero point correction)
- Set the maximum pressure value and assign it to the maximum flow value
- Device reset

Note!
- The operation must be unlocked. → 20, "Locking/unlocking operation".
- The device is configured for the "Pressure" measuring mode as standard. You can switch measuring modes by means of the "Measuring mode" parameter. → 25, "Measuring mode selection".
- DIP switch 4 (SW/√) on the electronics insert can be used to switch to the "Flow" measuring mode. In this case, the "Measuring mode" parameter is adjusted automatically.
- The "Zero"- key does not have any function in the "Flow" measuring mode.
- The pressure applied must be within the nominal pressure limits of the sensor. See information on the nameplate.

Carry out position adjustment.[1)]	
Pressure is present at device.	
↓	
Press the "Zero" and "Span" keys simultaneously for at least 3 s.	
↓	
Does the LED on the electronic insert light up briefly?	
Yes	No
↓	↓
Applied pressure for position adjustment has been accepted.	Applied pressure for position adjustment has not been accepted. Observe the input limits.

Setting maximum pressure value.	
Desired pressure for the maximum pressure value ("Max. Press. Flow") is present at device.	
↓	
Press the "Span" key for at least 3 s.	
↓	
Does the LED on the electronic insert light up briefly?	
Yes	No
↓	↓
The pressure present was saved as the maximum pressure value ("Max. Press. Flow") and assigned to the maximum flow value ("Max. Flow").	The pressure present was not saved as the maximum pressure value. Observe the input limits.

1) Observe warning concerning the commissioning (page → 21).

6.2 Commissioning with an operating menu

6.2.1 Selecting the language, measuring mode and pressure unit

Language selection

Parameter name	Description
Language (000) Selection Menu path: Main menu → Language	Select the menu language for the local display. **Options:** ■ English ■ Another language (as selected when ordering the device) ■ Possibly a third language (language of the manufacturing plant) **Factory setting**: English

Measuring mode selection

Parameter name	Description
Measuring mode (005) Selection Menu path: Setup → Measuring mode	Select the measuring mode. The operating menu is structured differently depending on the measuring mode selected. ✎ Note! If the measuring mode is changed, no conversion takes place. If necessary, the device has to be recalibrated after the measuring mode has been changed. **Options:** ■ Pressure ■ Level ■ Flow **Factory setting:** Pressure

Pressure unit selection

Parameter name	Description
Press. eng. unit (125) Selection Menu path: Setup → Press. eng. unit	Select the pressure unit. If a new pressure unit is selected, all pressure-specific parameters are converted and displayed with the new unit. **Options:** ■ mbar, bar ■ mmH2O, mH2O, inH2O ■ ftH2O ■ Pa, kPa, MPa ■ psi ■ mmHg, inHg ■ kgf/cm^2 **Factory setting:** mbar or bar depending on the sensor nominal measuring range, or as per order specifications

6.3 Position zero adjustment

The pressure resulting from the orientation of the device can be corrected here.

Parameter name	Description
Corrected press. (172) Display Menu path: Setup → Corrected press.	Displays the measured pressure after sensor trim and position adjustment. ✎ Note! If this value is not equal to "0", it can be corrected to "0" by the position adjustment.
Pos. zero adjust (007) Selection Menu path: Setup → Pos. zero adjust	Position zero adjustment – the pressure difference between zero (set point) and the measured pressure need not be known. **Example:** – Measured value = 2.2 mbar (0.033 psi) – You correct the measured value via the "Pos. zero adjust" parameter with the "Confirm" option. This means that you assign the value 0.0 to the pressure present. – Measured value (after pos. zero adjust) = 0.0 mbar – The current value is also corrected. **Options** ■ Confirm ■ Abort **Factory setting:** Abort

6.4 Commissioning of Differential pressure measurement

Parameter name	Description
Measuring mode (005) Selection	Select the "Pressure" measuring mode.
Switch P1/P2 (163) Display	Indicates whether the "SW/P2High" DIP switch (DIP switch 5) is switched on.
High pressure side (006) (183) Selection/Display	Determines, which pressure input corresponds to the high-pressure side. ✎ Note! This setting is only valid if the "SW/P2High" DIP switch is in the OFF position (see the "Pressure side switch" (163) parameter). Otherwise P2 corresponds to the high- pressure side in any case.
Press. eng. unit (125) Selection	Select the pressure unit. If a new pressure unit is selected, all pressure-specific parameters are converted and displayed with the new unit.
Corrected press. (172) Display	Displays the measured pressure after sensor trim and position adjustment.
Pos. zero adjust (007) Selection	Position adjustment – the pressure difference between zero (set point) and the measured pressure need not be known. **Example:** – Measured value = 2.2 mbar (0.033 psi) – You correct the measured value via the "Pos. zero adjust" parameter with the "Confirm" option. This means that you assign the value 0.0 to the pressure present. – Measured value (after pos. zero adjust) = 0.0 mbar – The current value is also corrected.
Set LRV (056) Entry	Set the pressure value for the lower current value (4 mA).
Set URV (057) Entry	Set the pressure value for the upper current value (20 mA).
Damping switch (164) Display	Displays the status of DIP switch 2 ("damping τ"), which is used to switch the damping of the output signal on and off.
Damping value (017) Entry/Display	Enter damping time (time constant τ). The damping affects the speed at which the measured value reacts to changes in pressure. ✎ Note! The damping is only active if DIP switch 2 ("damping τ") is in the ON position.
Pressure after damping (111) Display	Displays the measured pressure after sensor trim, position adjustment and damping.

6.5 Commissioning of Flow measurement

6.5.1 Information on flow measurement

In the "Flow" measuring mode, the device determines a volume or mass flow value from the differential pressure measured. The differential pressure is generated by means of primary elements such as pitot tubes or orifice plates and depends on the volume or mass flow. Four flow types are available: volume flow, norm volume flow (European norm conditions), standard volume flow (American standard conditions), mass flow and flow in %.

In addition, the Deltabar M software is equipped with two totalizers as standard. The totalizers add up the volume or the mass flow. The counting function and the unit can be set separately for both totalizers. The first totalizer (totalizer 1) can be reset to zero at any time while the second (totalizer 2) totalises the flow from commissioning onwards and cannot be reset.

✎ Note!
The totalizers are not available for the "Flow in %" flow type.

Parameter name	Description
Lin./SQRT switch (133) Display	Displays the status of DIP switch 4 on the electronic insert, which is used to define the output characteristics of the current output.
Measuring mode (005) Selection	Select the "Flow" measuring mode.
Pressure side switch (163) Display	Indicates whether the "SW/P2High" DIP switch (DIP switch 5) is switched on.
High pressure side (006) (183) Selection	Determines, which pressure input corresponds to the high-pressure side. ✎ Note! This setting is only valid if the "SW/P2High" DIP switch is in the OFF position (see the "Pressure side switch" (163) parameter). Otherwise P2 corresponds to the high- pressure side in any case.
Press. eng. unit (125) Selection	Select the pressure unit. If a new pressure unit is selected, all pressure-specific parameters are converted and displayed with the new unit.
Corrected press. (172) Display	Displays the measured pressure after sensor trim and position adjustment.
Pos. zero adjust (007) Selection	Position adjustment – the pressure difference between zero (set point) and the measured pressure need not be known. **Example:** – Measured value = 2.2 mbar (0.033 psi) – You correct the measured value via the "Pos. zero adjust" parameter with the "Confirm" option. This means that you assign the value 0.0 to the pressure present. – Measured value (after pos. zero adjust) = 0.0 mbar – The current value is also corrected.
Max. flow (009) Entry	Enter maximum flow of primary element. See also layout sheet of primary element. The maximum flow is assigned to the maximum pressure which you enter via the "Max. pressure flow" (010) parameter.

Parameter name	Description
Max. pressure flow (010) Entry	Enter maximum pressure of primry element. → See layout sheet of primary element. This pressure is assigned to the flow defined in the "Max. flow" (009) parameter.
Damping switch (164) Display	Displays the status of DIP switch 2 "damping τ", which is used to switch the damping of the output signal on and off.
Damping value (017) Entry/Display	Enter damping time (time constant τ). The damping affects the speed at which the measured value reacts to changes in pressure. ✎ Note! The damping is only active if DIP switch 2 "damping τ" is in the ON position.
Flow (018) Display	Displays the present flow value.
Pressure after damping (111) Display	Displays the measured pressure after sensor trim, position adjustment and damping.

6.6 Commissioning of Level measurement

6.6.1 Information on level measurement

Note!
You have a choice of two methods for calculating the level: "In pressure" and "In height". The table in the "Overview of level measurement" section that follows provides you with an overview of these two measuring tasks.
- The limit values are not checked, i.e. the values entered must be appropriate for the sensor and the measuring task for the device to be able to measure correctly.
- Customer-specific units are not possible.
- The values entered for "Empty calib./Full calib.", "Empty pressure/Full pressure", "Empty height/Full height" and "Set LRV/Set URV" must be at least 1% apart. The value will be rejected, and a message output, if the values are too close together.

6.6.2 Overview of level measurement

Measuring task	Level selection	Measured variable options	Description	Measured value display
Calibration takes place by entering two pressure/level value pairs.	"In pressure"	Via the "Output unit" parameter: %, level, volume or mass units.	■ Calibration with reference pressure (wet calibration), → 30 ■ Calibration without reference pressure (dry calibration) → 32	The measured value display and the "Level before lin" parameter display the measured value.
Calibration takes place by entering the density and two height/level value pairs.	"In height"		■ Calibration with reference pressure (wet calibration), → 36 ■ Calibration without reference pressure (dry calibration) → 33	

6.6.3 Level selection "in pressure"
Calibration with reference pressure (wet calibration)

Example:
In this example, the level in a tank should be measured in "m". The maximum level is 3 m (9.8 ft). The pressure range is set to 0 to 300 mbar (4.5 psi).

Prerequisite:
- The measured variable is in direct proportion to the pressure.
- The tank can be filled and emptied.

Note!
The values entered for "Empty calib./Full calib." and" Set LRV/Set URV" must be at least 1% apart. The value will be rejected, and a message output, if the values are too close together. Other limit values are not checked, i.e. the values entered must be appropriate for the sensor and the measuring task for the device to be able to measure correctly.

	Description
1	Perform "position zero adjustment" → 📄 26.
2	Select the "Level" measuring mode via the "Measuring mode (005)" parameter (→ 📄 25). Menu path: Setup → Measuring mode
3	Select a pressure unit via the "Press eng. unit" parameter, here "mbar" for example. Menu path: Setup → Press. eng. unit
4	Select the "In pressure" level mode via the "Level selection" parameter. Menu path: Setup → Extended setup → Level → Level selection
5	Select a level unit via the "Output unit" parameter, here "m" for example. Menu path: Setup → Extended setup → Level → Output unit
6	Select the "Wet" option via the "Calibration mode" parameter. Menu path: Setup → Extended setup → Level → Calibration mode
7	a. The hydrostatic pressure for the lower calibration point is present at the device, here "0 mbar" for example. b. Select the "Empty calib." parameter. c. Enter the level value, here "0 m" for example. Confirming the value means you assign the pressure value present to the lower level value. Menu path: Setup → Extended setup → Level → Empty calib.
8	a. The hydrostatic pressure for the upper calibration point is present at the device, here "300 mbar" (4.5 psi) for example. b. Select the "Full calib." parameter. c. Enter the level value, here "3 m" (9.8 ft) for example. Confirming the value means you assign the pressure value present to the upper level value. Menu path: Setup → Extended setup → Level → Full calib.
9	Result: The measuring range is set for 0 to 3 m (9.8 ft). 0 m corresponds to an output current of 4 mA. 3 m (9.8 ft) corresponds to an output current of 20 mA.

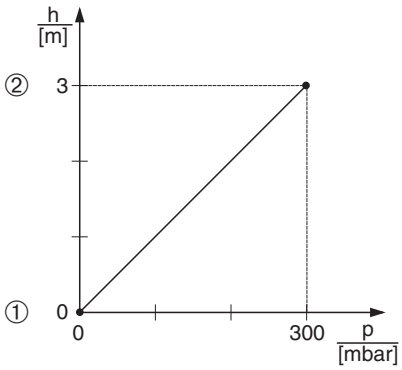

P01-xxxxxxxx-05-xx-xx-xx-011

Calibration with reference pressure (wet calibration)

1 See Table, Step 7
2 See Table, Step 8

6.6.4 Level selection "in pressure"
Calibration without reference pressure (dry calibration)

Example:
In this example, the volume in a tank should be measured in liters. The maximum volume of 1000 liters (264 US gal) corresponds to a pressure of 400 mbar (6 psi). The minimum volume of 0 liters corresponds to a pressure of 0 mbar.

Prerequisite:
- The measured variable is in direct proportion to the pressure.
- This is a theoretical calibration i.e. the pressure and volume values for the lower and upper calibration point must be known.

Note!
The values entered for "Empty calib./Full calib." and" Set LRV/Set URV" must be at least 1% apart. The value will be rejected, and a message output, if the values are too close together. Other limit values are not checked, i.e. the values entered must be appropriate for the sensor and the measuring task for the device to be able to measure correctly.

	Description	
1	Perform "position zero adjustment" → 26.	
2	Select the "Level" measuring mode via the "Measuring mode (005)" parameter (→ 25). Menu path: Setup → Measuring mode	
3	Select a pressure unit via the "Press eng. unit" parameter (→ 26), here "mbar" for example. Menu path: Setup → Press. eng. unit	
4	Select the "In pressure" level mode via the "Level selection" parameter. Menu path: Setup → Extended setup → Level → Level selection	
5	Select a volume unit via the "Output unit" parameter, here "l" for example. Menu path: Setup → Extended setup → Level → Output unit	
6	Select the "Dry" option via the "Calibration mode" parameter. Menu path: Setup → Extended setup → Level → Calibration mode	

	Description
7	Enter the volume value for the lower calibration point via the "Empty calib." parameter, here "0 liter" for example. Menu path: Setup → Extended setup → Level → Empty calib.
8	Enter the pressure value for the lower calibration point via the "Empty pressure" parameter, here "0 mbar" for example. Menu path: Setup → Extended setup → Level → Empty pressure
9	Enter the volume value for the upper calibration point via the "Full calib." parameter, here "1000 liter" (264 US gal) for example. Menu path: Setup → Extended setup → Level → Full calib.
10	Enter the pressure value for the upper calibration point via the "Full pressure" parameter, here "400 mbar" (6 psi) for example. Menu path: Setup → Extended setup → Level → Full pressure
11	Result: The measuring range is set for 0 to 1000 l (264 US gal). 0 l corresponds to an output current of 4 mA. 1000 l (264 US gal) corresponds to an output current of 20 mA.

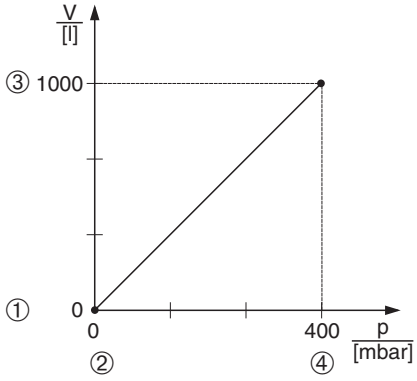

Calibration without reference pressure (dry calibration)

1 See Table, Step 7.
2 See Table, Step 8.
3 See Table, Step 9.
4 See Table, Step 10.

6.6.5 Level selection "in height"
Calibration without reference pressure (dry calibration)

Example:
In this example, the volume in a tank should be measured in liters. The maximum volume of 1000 liters (264 US gal) corresponds to a level of 4 m. The minimum volume of 0 liters corresponds to a height of 0 m. The density of the medium is 1 g/cm^3(1 SGU).

Prerequisite:
- The measured variable is in direct proportion to the pressure.
- This is a theoretical calibration i.e. the pressure and volume values for the lower and upper calibration point must be known.

✎ Note!
The values entered for "Empty calib./Full calib." and " Set LRV/Set URV" must be at least 1% apart. The value will be rejected, and a message output, if the values are too close together. Other limit values are not checked, i.e. the values entered must be appropriate for the sensor and the measuring task for the device to be able to measure correctly.

	Description	
1	Perform "position zero adjustment" → 📄 26.	
2	Select the "Level" measuring mode via the "Measuring mode (005)" parameter (→ 📄 25). Menu path: Setup → Measuring mode	
3	Select a pressure unit via the "Press eng. unit" parameter (→ 📄 26), here "mbar" for example. Menu path: Setup → Press. eng. unit	
4	Select the "In height" level mode via the "Level selection" parameter. Menu path: Setup → Extended setup → Level → Level selection	
5	Select a volume unit via the "Output unit" parameter, here "l" for example. Menu path: Setup → Extended setup → Level → Output unit	
6	Select a height unit via the "Height unit" parameter, here "m" for example. Menu path: Setup → Extended setup → Level → Height unit	
7	Select the "Wet" option via the "Calibration mode" parameter. Menu path: Setup → Extended setup → Level → Calibration mode	

	Description
8	Enter the height value for the lower calibration point via the "Empty height" parameter, here "0 m" for example. Menu path: Setup → Extended setup → Level → Empty height
9	Enter the volume value for the upper calibration point via the "Full calib." parameter, here "1000 liter" (264 US gal) for example. Menu path: Setup → Extended setup → Level → Full calib.
10	Enter the volume value for the lower calibration point via the "Empty calib." parameter, here "0 liter" for example. Menu path: Setup → Extended setup → Level → Empty calib.
11	Enter the height value for the upper calibration point via the "Full height" parameter, here "4 m" (13 ft) for example. Menu path: Setup → Extended setup → Level → Full height
12	Enter the density of the medium, using the "Adjust density" parameter, here 1 g/cm³ (1 SGU) for example. Menu path: Setup → Extended setup → Level → Adjust density
13	Result: The measuring range is set for 0 to 1000 l (264 US gal). 0 l corresponds to an output current of 4 mA. 1000 l (264 US gal) corresponds to an output current of 20 mA.

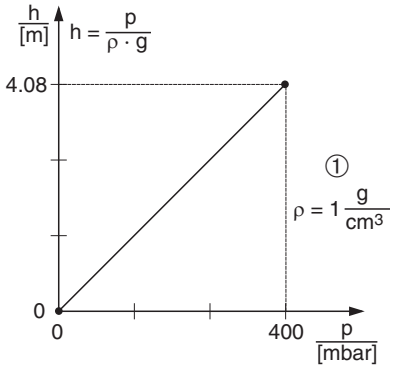

P01-FMX21xxx-05-xx-xx-xx-029

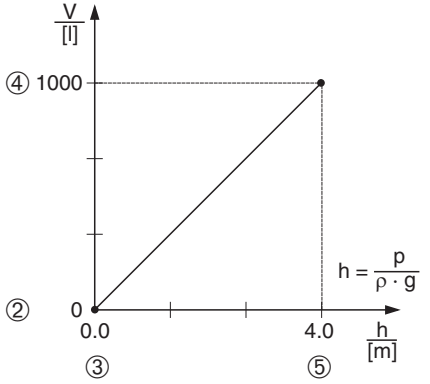

P01-FMX21xxx-05-xx-xx-xx-032

Calibration without reference pressure (dry calibration)

1 See table, Step 12.
2 See table, Step 8.
3 See table, Step 9.
4 See table, Step 10.
5 See table, Step 11.

6.6.6 Level selection "in height"
Calibration with reference pressure (wet calibration)

Example:
In this example, the volume in a tank should be measured in liters. The maximum volume of 1000 liters (264 US gal) corresponds to a level of 4 m (13 ft). The minimum volume of 0 liters corresponds to a height of 0 m. The density of the medium is 1 g/cm³ (1 SGU).

Prerequisite:
- The measured variable is in direct proportion to the pressure.
- The tank can be filled and emptied.

Note!
The values entered for "Empty calib./Full calib." and" Set LRV/Set URV" must be at least 1% apart. The value will be rejected, and a message output, if the values are too close together. Other limit values are not checked, i.e. the values entered must be appropriate for the sensor and the measuring task for the device to be able to measure correctly.

	Description	
1	Perform "position zero adjustment" → 🖹 26.	
2	Select the "Level" measuring mode via the "Measuring mode (005)" parameter (→ 🖹 25). Menu path: Setup → Measuring mode	
3	Select a pressure unit via the "Press eng. unit" parameter (→ 🖹 26), here "mbar" for example. Menu path: Setup → Press. eng. unit	
4	Select the "In height" level mode via the "Level selection" parameter. Menu path: Setup → Extended setup → Level → Level selection	
5	Select a volume unit via the "Output unit" parameter, here "l" for example. Menu path: Setup → Extended setup → Level → Output unit	
6	Select a height unit via the "Height unit" parameter, here "m" for example. Menu path: Setup → Extended setup → Level → Height unit	
7	Select the "Wet" option via the "Calibration mode" parameter. Menu path: Setup → Extended setup → Level → Calibration mode	

	Description
8	a. The hydrostatic pressure for the lower calibration point is present at the device, here "0 mbar" for example. b. Select the "Empty calib." parameter. c. Enter the volume value, here "0 l" for example. Menu path: Setup → Extended setup → Level → Empty calib.
9	a. The hydrostatic pressure for the upper calibration point is present at the device, here "400 mbar" (6 psi) for example. b. Select the "Full calib." parameter. c. Enter the volume value, here "1000 l" (264 US gal) for example. Menu path: Setup → Extended setup → Level → Full calib.
10	Enter the density of the medium, using the "Adjust density" parameter, here 1 g/cm³ (1 SGU) for example. Menu path: Setup → Extended setup → Level → Adjust density
11	If the process uses a medium other than the medium on which the calibration was based, the new density must be specified in the "Process density" parameter. Menu path: Setup → Extended Setup → Level → Density process
12	Result: The measuring range is set for 0 to 1000 l (264 US gal). 0 l corresponds to an output current of 4 mA. 1000 l (264 US gal) corresponds to an output current of 20 mA.

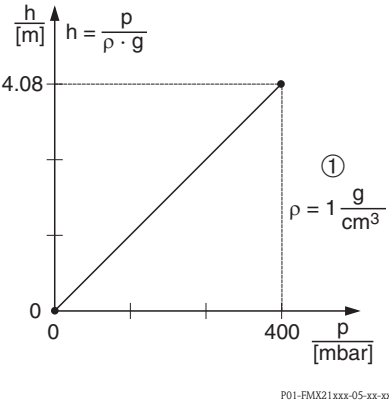

P01-FMX21xxx-05-xx-xx-xx-029

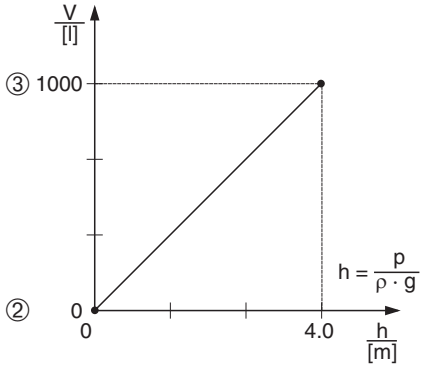

P01-FMX21xxx-05-xx-xx-xx-030

Calibration with reference pressure (wet calibration)

1 See table, Step 10 .
2 See table, Step 8.
3 See table, Step 9.

www.endress.com/worldwide

Endress+Hauser

People for Process Automation

KA01027P/00/EN/16.14
71269367
CCS/FM+SGML 9

71269367

REVISIONS					
REV	DESCRIPTION	ECN	DATE	BY	APPROVED
F	Updated Top plate closure, pre cuts	-	6/25/13	JS	-
-	-	-	-	-	-

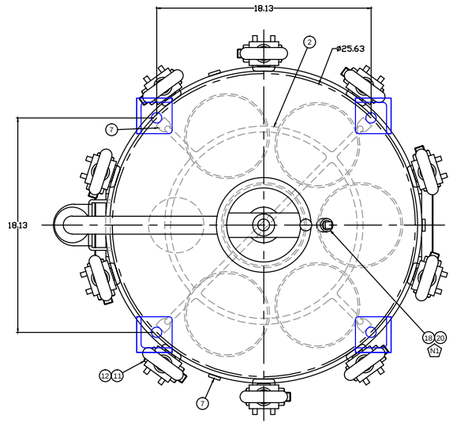

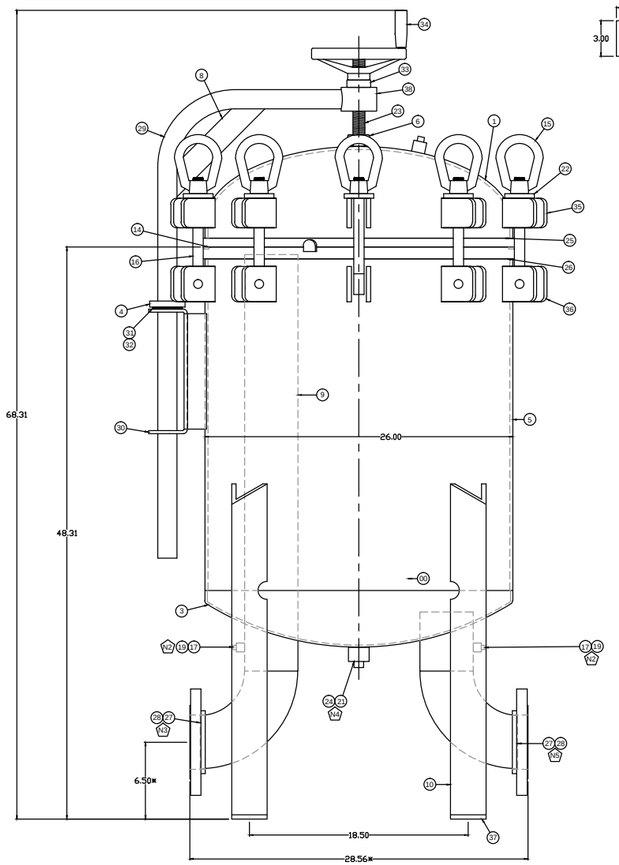

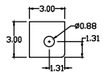

Balloon	Part #	Description	Quantity
38	3RDC	3" ROUND ROD CARBON A36 20FT	2
37	PL-C-144	Plate,Feet,3x3x.375,SA-36	4
36	PL-C-134-NC	Ear,Shell,MR,C/S,SA-36	10
35	PL-C-135-NC	Ear,LID,MR,C/S,SA-36	10
34	KW-30748	Handle Wheel,Aluminum,8"OD,	1
33	1"TB-HD	1" THRUST BEARING, HEAVY DUT	1
32	DTBR	WASHER THRUST TRD 2840	2
31	DTB	DAVIT THRUST BEARINGS TORRIN	1
30	DLBRC	BRACKET DAVIT LIFT 1/4" HR	1
29	DLAC	DAVIT LIFT ARM CARBON	1
28	4FC	4" RFSO FLANGE CARBON 150#	2
27	4-90-C	4" 90 DEGREE CARBON ELBOW LR	2
26	26TPC6D4	TOP PLATE.26.75"OD,1"T,6 Bag	1
25	HR-26.75-C-PART	Head Ring,26.75"OD,SA-36	1
24	1PPC	1" PIPE PLUG CARBON	1
23	FTS-1X8-C-ZP	Full Thread Stud,1"-8x8"L	1
22	.375SQW	.375" X 2" X 2.5" SQUARE WAS	10
21	1HCC	1" HALF COUPLING CARBON 3000	1
20	.50HCC	Coupler,Half,.50",3000 class	1
19	.25HCC	Coupler,Half,.25",3000 class	2
18	.50PPC	1/2 PIPE PLUG CARBON	1
17	.25PPC	1/4 PIPE PLUG CARBON STEEL	2
16	REM	ROD END 7/8"-9 X 9",4140 All	10
15	ENM	EYE NUT 7/8-9,C1045	10
14	CB26LB	O Ring,Buna,LR6/C26	1
13	BT-LR-2-SR-S	Basket,LR Style,#2,9/64"Perf	6 Not Shown
12	.75NLN	.75-10 NYLON LOCK NUT ZINC P	10
11	.75HB	.75-10 X 3.5" GR5 HEX HEAD S	10
10	3ANG.375C	3"X3" ANGLE 3/8" A36 CARBN 2	111.75
9	4P-SCH40-C	Pipe,4",Sch.40,SA53-B,Type E	40.19
8	.375X2HRC	3/8" X 2" SA36 HR CARBON 20'	10.5
7	PL-C-142	Plate Tab,.25" x 1",SA-36	7
6	HN-1-2H-PF	Hex Nut,1"-8,2H,Plain Finish	1
5	2628RTC.1875	Plate Roll & Tack,SA-36	1
4	PL-C-116	Plate,Donut,3"OD,1.75"ID	1
3	26H1F5-.1875	Head,F&D,26"OD,.1875"t	1
2	HD-26-C-102	Hold Down,MR,SA-36 or Equiv.	1
1	26HFC-.25-NB	HEAD,2:1 Elip,26"OD,.25"WT	1

MARK	QTY	SERVICE	SIZE	TYPE	WALL THICKNESS	WELD DETAIL	NUMBER	PURPOSE
N5	1	Outlet	4"	RFSO	150#	H, U		
N4	1	Drain	1"	NPT	3000#	B		
N3	1	Inlet	4"	RFSO	150#	H, U		
N2	2	Gauge	.25"	NPT	3000#	B		
N1	1	Vent	.5"	NPT	3000#	B	-	-
NOZZLE SCHEDULE							JIGS USED	

APPROVALS		DATE
Approved By	-	-
Checked By	-	-
Drawn By	JS	6/21/13

FINISH INFO	
Prep Sandblast Interior:	SP 7 (Closure)
Prep Sandblast Exterior:	SP 7 (Closure)
Finish Sandblast Interior:	SP 7 (Rough)
Finish Sandblast Exterior:	SP 7 (Rough)
Paint Interior:	Black Epoxy
Paint Exterior:	Black Epoxy

DESIGN INFO	
M.A.W.P.:	150 psig @ 300° F
M.A.E.P.:	0
M.D.M.T.:	-20° F @ 150 psig
Hydro Test Pressure:	195 psig
Radiography:	None
Corrosion Allowance:	None
Weight:	-
Element:	(6) #2 Filter Bag

GENERAL TOLERANCES (unless otherwise noted)	
*	+/- .125" (Critical)
XX.XXXX	+/- .0625"
XX.XXX	+/- .125"
XX.XX	+/- .25"
XX.X	+/- .5"
ANGULAR TOLERANCE : 3°	

GENERAL NOTES

1) All dimensions are in inches unless otherwise noted
2) No heat treatment or impact testing.

PENTAIR
9449 South 550 West
Winamac, IN. 46996
Phone: 574-278-7161 / Fax: 574-278-7131

Part Number: LR6304FAC15

Dwg No.	Revision
2273	F

THIS DOCUMENT IS SOLELY THE PROPERTY OF PENTAIR. REPRODUCTION, USE DISCLOSURE, OR TRANSMISSION OF THIS DOCUMENT OR DETAILS CONTAINED HEREIN, IN PART OR IN WHOLE, IS PROHIBITED WITHOUT WRITTEN CONSENT OF PENTAIR ENGINEERING. THIS DOCUMENT AND ANY COPIES SHALL BE RETURNED TO PENTAIR UPON WRITTEN REQUEST.

Scale: Not to Scale | AutoCAD Format | Sheet 1 of 1

INDUSTRIAL MULTI-ROUND SERIES
CARTRIDGE HOUSINGS

Multi-Round Liquid Cartridge Housings offer the versatility of choosing the correct cartridges for the needed flow rates, chemical compatibility and particle retention.

FEATURES/BENEFITS

Flow rates from 120 to 4100 gpm (454.2 to 15,518.5 Lpm)

Carbon or Stainless Steel construction

Bearing assisted davit assemblies

Buna-N lid seals

316 Stainless Steel cup and spring assemblies

150 PSI (10.3 bar) pressure rating

Differential, drain and vent ports

Heavy-duty support legs

Two-part epoxy finish inside and outside on carbon steel housings

316 Stainless Steel center guide posts

Zinc-plated swing bolts and eye nuts

11-round to 205-round capacity

Made to accept double open end cartridges (DOE) or 222 style with closed top cap*

APPLICATIONS

Commercial

General Industrial

OPTIONS

Duplexing for continual flow during maintenance

Hydraulic lid lift

Higher pressure rating

226 style catridge compatibility

ASME Code U

Various connection sizes and types

** Note: Type of element top which will be used must be noted at the time of the housing order.*

DIMENSIONS

MODEL	# OF ELEMENTS	CARTRIDGE LENGTH	CONNECTION SIZE		DIMENSIONS													WEIGHT	
					A	B	C	D	E	F	G	H	I	J	K	L	M		
C1212	11	20"	2	IN	12.0	2.0	42.3	59.8	8.0	11.0	9.4	8.7	20.5	40.4	57.9	11.0	6.0	LBS	400
				MM	305	51	1,075	1,519	203	279	238	221	521	1,027	1,472	279	152	KG	181
			3	IN	12.0	3.0	44.3	61.8	10.0	11.0	9.4	8.7	20.5	41.6	59.1	11.0	6.0	LBS	410
				MM	305	76	1,125	1,570	254	279	238	221	521	1,056	1,500	279	152	KG	186
			4	IN	12.0	4.0	46.8	64.3	12.5	11.0	9.4	8.7	20.5	42.6	60.1	11.0	6.0	LBS	420
				MM	305	102	1,189	1,633	318	279	238	221	521	1,081	1,526	279	152	KG	190
		30"	2	IN	12.0	2.0	52.3	69.8	8.0	11.0	9.4	8.7	20.5	50.4	67.9	11.0	6.0	LBS	400
				MM	305	51	1,329	1,773	203	279	238	221	521	1,281	1,726	279	152	KG	181
			3	IN	12.0	3.0	54.3	71.8	10.0	11.0	9.4	8.7	20.5	51.6	69.1	11.0	6.0	LBS	410
				MM	305	76	1,379	1,824	254	279	238	221	521	1,310	1,754	279	152	KG	186
			4	IN	12.0	4.0	56.8	74.3	12.5	11.0	9.4	8.7	20.5	52.6	70.1	11.0	6.0	LBS	420
				MM	305	102	1,443	1,887	318	279	238	221	521	1,335	1,780	279	152	KG	190
		40"	2	IN	12.0	2.0	62.3	79.8	8.0	11.0	9.4	8.7	20.5	60.4	77.9	11.0	6.0	LBS	400
				MM	305	51	1,583	2,027	203	279	238	221	521	1,535	1,980	279	152	KG	181
			3	IN	12.0	3.0	64.3	81.8	10.0	11.0	9.4	8.7	20.5	61.6	79.1	11.0	6.0	LBS	410
				MM	305	76	1,633	2,078	254	279	238	221	521	1564	2,008	279	152	KG	186
			4	IN	12.0	4.0	66.8	84.3	12.5	11.0	9.4	8.7	20.5	62.6	80.1	11.0	6.0	LBS	420
				MM	305	102	1,697	2,141	318	279	238	221	521	1589	2,034	279	152	KG	190
C1616	20	20"	2	IN	16.0	2.0	40.4	61.8	8.0	13.0	11.1	11.1	20.5	38.5	59.9	11.0	6.0	LBS	400
				MM	406	51	1,026	1,570	203	330	281	281	521	978	1,522	279	152	KG	181
			3	IN	16.0	3.0	42.4	63.9	10.0	13.0	11.1	11.1	20.5	39.6	61.1	11.0	6.0	LBS	410
				MM	406	76	1,077	1,623	254	330	281	281	521	1,007	1,551	279	152	KG	186
			4	IN	16.0	4.0	46.1	66.3	12.5	13.0	11.1	11.1	20.5	40.7	62.1	11.0	6.0	LBS	420
				MM	406	102	1,170	1,684	318	330	281	281	521	1,034	1,576	279	152	KG	190
		30"	2	IN	16.0	2.0	50.4	71.8	8.0	13.0	11.1	11.1	20.5	48.5	69.9	11.0	6.0	LBS	400
				MM	406	51	1,280	1,824	203	330	281	281	521	1,232	1,776	279	152	KG	181
			3	IN	16.0	3.0	52.4	73.9	10.0	13.0	11.1	11.1	20.5	49.6	71.1	11.0	6.0	LBS	410
				MM	406	76	1,331	1,877	254	330	281	281	521	1,261	1,805	279	152	KG	186
			4	IN	16.0	4.0	56.1	76.3	12.5	13.0	11.1	11.1	20.5	50.7	72.1	11.0	6.0	LBS	420
				MM	406	102	1,424	1,938	318	330	281	281	521	1,288	1,830	279	152	KG	190
		40"	2	IN	16.0	2.0	60.4	81.8	8.0	13.0	11.1	11.1	20.5	58.5	79.9	11.0	6.0	LBS	400
				MM	406	51	1,534	2,078	203	330	281	281	521	1,486	2,030	279	152	KG	181
			3	IN	16.0	3.0	62.4	83.9	10.0	13.0	11.1	11.1	20.5	59.6	81.1	11.0	6.0	LBS	410
				MM	406	76	1,585	2,131	254	330	281	281	521	1,515	2,059	279	152	KG	186
			4	IN	16.0	4.0	66.1	86.3	12.5	13.0	11.1	11.1	20.5	60.7	82.1	11.0	6.0	LBS	420
				MM	406	102	1,678	2,192	318	330	281	281	521	1,542	2,084	279	152	KG	190

All dimensions are approximate.

DIMENSIONS (CONTINUED)

MODEL	# OF ELEMENTS	CARTRIDGE LENGTH	CONNECTION SIZE		DIMENSIONS													WEIGHT	
					A	B	C	D	E	F	G	H	I	J	K	L	M		
C1818	26	20"	2	IN	18.0	2.0	40.6	59.5	8.0	14.0	12.1	12.4	20.5	38.8	57.8	11.0	6.0	LBS	525
				MM	457	51	1,032	1,511	203	356	308	314	521	986	1,467	279	152	KG	238
			3	IN	18.0	3.0	42.7	61.6	10.0	14.0	12.1	12.4	20.5	39.9	58.9	11.0	6.0	LBS	535
				MM	457	76	1,084	1,565	254	356	308	314	521	1,014	1,496	279	152	KG	243
			4	IN	18.0	4.0	45.1	64.1	12.5	14.0	12.1	12.4	20.5	40.9	59.9	11.0	6.0	LBS	545
				MM	457	102	1,146	1,627	318	356	308	314	521	1,040	1,521	279	152	KG	247
		30"	2	IN	18.0	2.0	50.6	69.5	8.0	14.0	12.1	12.4	20.5	48.8	67.8	11.0	6.0	LBS	525
				MM	457	51	1,286	1,765	203	356	308	314	521	1,240	1,721	279	152	KG	238
			3	IN	18.0	3.0	52.7	71.6	10.0	14.0	12.1	12.4	20.5	49.9	68.9	11.0	6.0	LBS	535
				MM	457	76	1,338	1,819	254	356	308	314	521	1,268	1,750	279	152	KG	243
			4	IN	18.0	4.0	55.1	74.1	12.5	14.0	12.1	12.4	20.5	50.9	69.9	11.0	6.0	LBS	545
				MM	457	102	1,400	1,881	318	356	308	314	521	1,294	1,775	279	152	KG	247
		40"	2	IN	18.0	2.0	60.6	79.5	8.0	14.0	12.1	12.4	20.5	58.8	77.8	11.0	6.0	LBS	525
				MM	457	51	1,540	2,019	203	356	308	314	521	1,494	1,975	279	152	KG	238
			3	IN	18.0	3.0	62.7	81.6	10.0	14.0	12.1	12.4	20.5	59.9	78.9	11.0	6.0	LBS	535
				MM	457	76	1,592	2,073	254	356	308	314	521	1,522	2,004	279	152	KG	243
			4	IN	18.0	4.0	65.1	84.1	12.5	14.0	12.1	12.4	20.5	60.9	79.9	11.0	6.0	LBS	545
				MM	457	102	1,654	2,135	318	356	308	314	521	1,548	2,029	279	152	KG	247
C2424	50	20"	3	IN	24.0	3.0	43.9	64.3	10.0	17.0	15.2	16.7	20.5	41.2	61.6	13.0	6.0	LBS	625
				MM	610	76	1,116	1,633	254	432	386	424	521	1,046	1,564	330	152	KG	283
			4	IN	24.0	4.0	46.4	66.8	12.5	17.0	15.2	16.7	20.5	42.2	62.6	13.0	6.0	LBS	635
				MM	610	102	1,178	1,695	318	432	386	424	521	1,072	1,589	330	152	KG	288
			6	IN	24.0	6.0	50.3	70.6	16.5	17.0	15.2	16.7	20.5	44.3	64.6	13.0	6.0	LBS	645
				MM	610	152	1,276	1,794	419	432	386	424	521	1,124	1,642	330	152	KG	293
		30"	3	IN	24.0	3.0	53.9	74.3	10.0	17.0	15.2	16.7	20.5	51.2	71.6	13.0	6.0	LBS	625
				MM	610	76	1,370	1,887	254	432	386	424	521	1,300	1,818	330	152	KG	283
			4	IN	24.0	4.0	56.4	76.8	12.5	17.0	15.2	16.7	20.5	52.2	72.6	13.0	6.0	LBS	635
				MM	610	102	1,432	1,949	318	432	386	424	521	1,326	1,843	330	152	KG	288
			6	IN	24.0	6.0	60.3	80.6	16.5	17.0	15.2	16.7	20.5	54.3	74.6	13.0	6.0	LBS	645
				MM	610	152	1,530	2,048	419	432	386	424	521	1,378	1,896	330	152	KG	293
		40"	3	IN	24.0	3.0	63.9	84.3	10.0	17.0	15.2	16.7	20.5	61.2	81.6	13.0	6.0	LBS	625
				MM	610	76	1,624	2,141	254	432	386	424	521	1,554	2,072	330	152	KG	283
			4	IN	24.0	4.0	66.4	86.8	12.5	17.0	15.2	16.7	20.5	62.2	82.6	13.0	6.0	LBS	635
				MM	610	102	1,686	2,203	318	432	386	424	521	1,580	2,097	330	152	KG	288
			6	IN	24.0	6.0	70.3	90.6	16.5	17.0	15.2	16.7	20.5	64.3	84.6	13.0	6.0	LBS	645
				MM	610	152	1,784	2,302	419	432	386	424	521	1,632	2,150	330	152	KG	293

All dimensions are approximate.

DIMENSIONS (CONTINUED)

MODEL	# OF ELEMENTS	CARTRIDGE LENGTH	CONNECTION SIZE		DIMENSIONS													WEIGHT	
					A	B	C	D	E	F	G	H	I	J	K	L	M		
C3030	78	20″	3	IN	30.0	3.0	48.9	70.8	10.0	20.0	18.2	20.9	20.5	46.1	68.0	13.0	6.0	LBS	665
				MM	762	76	1,242	1,797	254	508	462	531	521	1,172	1,727	330	152	KG	302
			4	IN	30.0	4.0	51.3	73.2	12.5	20.0	18.2	20.9	20.5	47.1	69.0	13.0	6.0	LBS	705
				MM	762	102	1,303	1,859	318	508	462	531	521	1,197	1,753	330	152	KG	320
			6	IN	30.0	6.0	55.3	77.1	16.5	20.0	18.2	20.9	20.5	49.2	71.1	13.0	6.0	LBS	850
				MM	762	152	1,403	1,959	419	508	462	531	521	1,249	1,805	330	152	KG	385
		30″	3	IN	30.0	3.0	58.9	80.8	10.0	20.0	18.2	20.9	20.5	56.1	78.0	13.0	6.0	LBS	665
				MM	762	76	1,496	2,051	254	508	462	531	521	1,426	1,981	330	152	KG	302
			4	IN	30.0	4.0	61.3	83.2	12.5	20.0	18.2	20.9	20.5	57.1	79.0	13.0	6.0	LBS	705
				MM	762	102	1,557	2,113	318	508	462	531	521	1,451	2,007	330	152	KG	320
			6	IN	30.0	6.0	65.3	87.1	16.5	20.0	18.2	20.9	20.5	59.2	81.1	13.0	6.0	LBS	850
				MM	762	152	1,657	2,213	419	508	462	531	521	1,503	2,059	330	152	KG	385
		40″	3	IN	30.0	3.0	68.9	90.8	10.0	20.0	18.2	20.9	20.5	66.1	88.0	13.0	6.0	LBS	665
				MM	762	76	1,750	2,305	254	508	462	531	521	1,680	2,235	330	152	KG	302
			4	IN	30.0	4.0	71.3	93.2	12.5	20.0	18.2	20.9	20.5	67.1	89.0	13.0	6.0	LBS	705
				MM	762	102	1,811	2,367	318	508	462	531	521	1,705	2,261	330	152	KG	320
			6	IN	30.0	6.0	75.3	97.1	16.5	20.0	18.2	20.9	20.5	69.2	91.1	13.0	6.0	LBS	850
				MM	762	152	1,911	2,467	419	508	462	531	521	1,757	2,313	330	152	KG	385
C3636	112	20″	4	IN	36.0	4.0	48.9	70.8	12.5	25.0	24.6	25.3	30.5	46.1	68.0	15.0	6.0	LBS	870
				MM	914	102	1,242	1,797	318	635	624	643	775	1,172	1,727	381	152	KG	395
			6	IN	36.0	6.0	51.3	73.2	16.5	25.0	24.6	25.3	30.5	47.1	69.0	15.0	6.0	LBS	1,010
				MM	914	152	1,303	1,859	419	635	624	643	775	1,197	1,753	381	152	KG	458
			8	IN	36.0	8.0	55.3	77.1	20.8	25.0	24.6	25.3	30.5	49.2	71.1	15.0	6.0	LBS	1,150
				MM	914	203	1,403	1,959	528	635	624	643	775	1,249	1,805	381	152	KG	522
		30″	4	IN	36.0	4.0	58.9	80.8	10.0	20.0	18.2	20.9	20.5	56.1	78.0	13.0	6.0	LBS	870
				MM	914	102	1,496	2,051	254	508	462	531	521	1,426	1,981	330	152	KG	395
			6	IN	36.0	6.0	61.3	83.2	12.5	20.0	18.2	20.9	20.5	57.1	79.0	13.0	6.0	LBS	1,010
				MM	914	152	1,557	2,113	318	508	462	531	521	1,451	2,007	330	152	KG	458
			8	IN	36.0	8.0	65.3	87.1	16.5	20.0	18.2	20.9	20.5	59.2	81.1	13.0	6.0	LBS	1,150
				MM	914	203	1,657	2,213	419	508	462	531	521	1,503	2,059	330	152	KG	522
		40″	4	IN	36.0	4.0	74.7	99.6	12.5	25.0	24.6	25.3	30.5	68.2	93.1	15.0	6.0	LBS	870
				MM	914	102	1,897	2,531	318	635	623.8	643	775	1,732	2,366	381	152	KG	395
			6	IN	36.0	6.0	78.9	103.8	16.5	25.0	24.6	25.3	30.5	70.3	95.3	15.0	6.0	LBS	1,010
				MM	914	152	2,004	2,637	419	635	624	643	775	1,786	2,419	381	152	KG	458
			8	IN	36.0	8.0	83.1	108.1	20.8	25.0	24.6	25.3	30.5	72.3	97.3	15.0	6.0	LBS	1,150
				MM	914	203	2,112	2,747	528	635	624	643	775	1,837	2,470	381	152	KG	522

All dimensions are approximate.

DIMENSIONS (CONTINUED)

MODEL	# OF ELEMENTS	CARTRIDGE LENGTH	CONNECTION SIZE		DIMENSIONS													WEIGHT	
					A	B	C	D	E	F	G	H	I	J	K	L	M		
C4242	155	20"	6	IN	42.0	6.0	60.8	87.7	16.5	28.0	27.6	29.5	30.5	52.2	79.2	15.0	6.0	LBS	1,960
				MM	1,067	152	1,543	2,227	419	711	702	749	775	1,326	2,011	381	152	KG	889
			8	IN	42.0	8.0	65.0	91.9	20.8	28.0	27.6	29.5	30.5	54.2	81.1	15.0	6.0	LBS	2,070
				MM	1,067	203	1,651	2,335	528	711	701	749	775	1,376	2,061	381	152	KG	939
			10	IN	42.0	10.0	69.0	95.9	25.0	28.0	27.6	29.5	30.5	56.3	83.3	15.0	6.0	LBS	2,200
				MM	1,067	254	1,753	2,437	635	711	701	749	775	1,430	2,115	381	152	KG	998
		30"	6	IN	42.0	6.0	70.8	97.7	16.5	28.0	27.6	29.5	30.5	62.2	89.2	15.0	6.0	LBS	1,960
				MM	1,067	152	1,797	2,481	419	711	702	749	775	1,580	2,265	381	152	KG	889
			8	IN	42.0	8.0	75.0	101.9	20.8	28.0	27.6	29.5	30.5	64.2	91.1	15.0	6.0	LBS	2,070
				MM	1,067	203	1,905	2,589	528	711	701	749	775	1,630	2,315	381	152	KG	939
			10	IN	42.0	10.0	79.0	105.9	25.0	28.0	27.6	29.5	30.5	66.3	93.3	15.0	6.0	LBS	2,200
				MM	1,067	254	2,007	2,691	635	711	701	749	775	1,684	2,369	381	152	KG	998
		40"	6	IN	42.0	6.0	80.8	107.7	16.5	28.0	27.6	29.5	30.5	72.2	99.2	15.0	6.0	LBS	1,960
				MM	1,067	152	2,051	2,735	419	711	702	749	775	1,834	2,519	381	152	KG	889
			8	IN	42.0	8.0	85.0	111.9	20.8	28.0	27.6	29.5	30.5	74.2	101.1	15.0	6.0	LBS	2,070
				MM	1,067	203	2,159	2,843	528	711	701	749	775	1,884	2,569	381	152	KG	939
			10	IN	42.0	10.0	89.0	115.9	25.0	28.0	27.6	29.5	30.5	76.3	103.3	15.0	6.0	LBS	2,200
				MM	1,067	254	2,261	2,945	635	711	701	749	775	1,938	2,623	381	152	KG	998
C4848	205	20"	8	IN	48.0	8.0	66.6	95.1	20.8	31.0	30.6	33.2	30.5	55.8	84.2	17.0	6.0	LBS	2,200
				MM	1,219	203	1,692	2,415	528	787	776	843	775	1,416	2,138	432	152	KG	998
			10	IN	48.0	10.0	70.6	99.1	25.0	31.0	30.6	33.2	30.5	57.9	86.3	17.0	6.0	LBS	2,350
				MM	1,219	254	1,794	2,516	635	787	776	843	775	1,470	2,192	432	152	KG	1,066
			12	IN	48.0	12.0	75.0	103.4	29.5	31.0	30.6	33.2	30.5	59.9	88.3	17.0	6.0	LBS	2,530
				MM	1,219	305	1,905	2,627	749	787	776	843	775	1,521	2,243	432	152	KG	1,147
		30"	8	IN	48.0	8.0	76.6	105.1	20.8	31.0	30.6	33.2	30.5	65.8	94.2	17.0	6.0	LBS	2,200
				MM	1,219	203	1,946	2,669	528	787	776	843	775	1,670	2,392	432	152	KG	998
			10	IN	48.0	10.0	80.6	109.1	25.0	31.0	30.6	33.2	30.5	67.9	96.3	17.0	6.0	LBS	2,350
				MM	1,219	254	2,048	2,770	635	787	776	843	775	1,724	2,446	432	152	KG	1,066
			12	IN	48.0	12.0	85.0	113.4	29.5	31.0	30.6	33.2	30.5	69.9	98.3	17.0	6.0	LBS	2,530
				MM	1,219	305	2,159	2,881	749	787	776	843	775	1,775	2,497	432	152	KG	1,147
		40"	8	IN	48.0	8.0	86.6	115.1	20.8	31.0	30.6	33.2	30.5	75.8	104.2	17.0	6.0	LBS	2,200
				MM	1,219	203	2,200	2,923	528	787	776	843	775	1,924	2,646	432	152	KG	998
			10	IN	48.0	10.0	90.6	119.1	25.0	31.0	30.6	33.2	30.5	77.9	106.3	17.0	6.0	LBS	2,350
				MM	1,219	254	2,302	3,024	635	787	776	843	775	1,978	2,700	432	152	KG	1,066
			12	IN	48.0	12.0	95.0	123.4	29.5	31.0	30.6	33.2	30.5	79.9	108.3	17.0	6.0	LBS	2,530
				MM	1,219	305	2,413	3,135	749	787	776	843	775	2,029	2,751	432	152	KG	1,147

All dimensions are approximate.

STYLE A - BOTTOM OUTLET

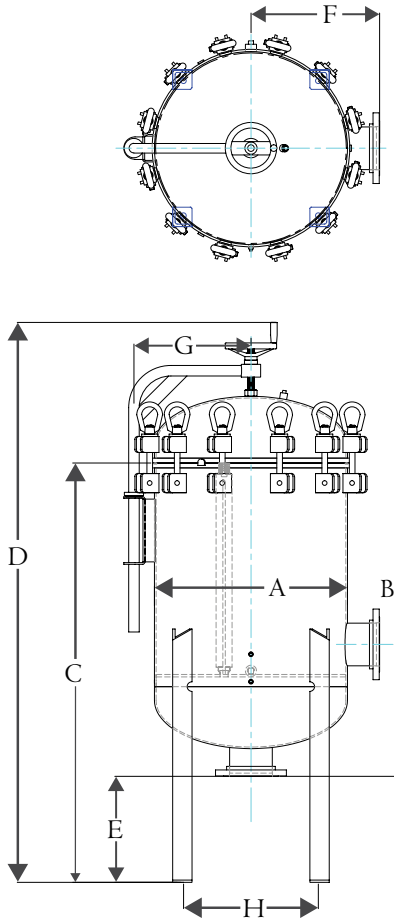

STYLE B - SIDE OUTLET

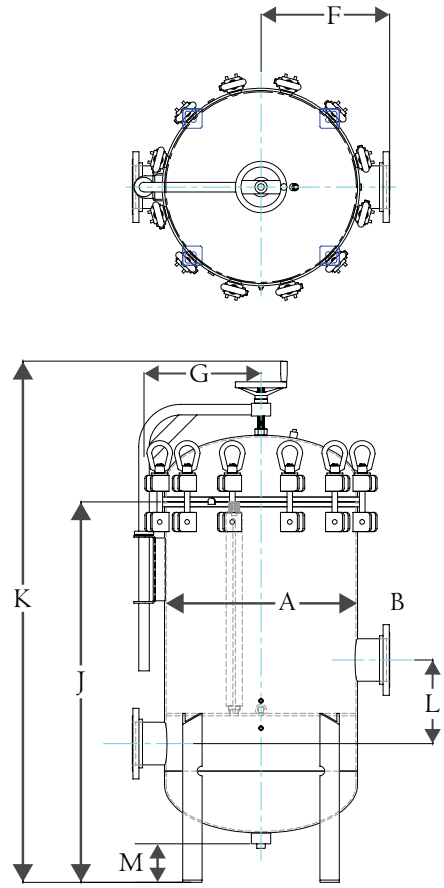

PRESSURE DROP VS FLOW RATE

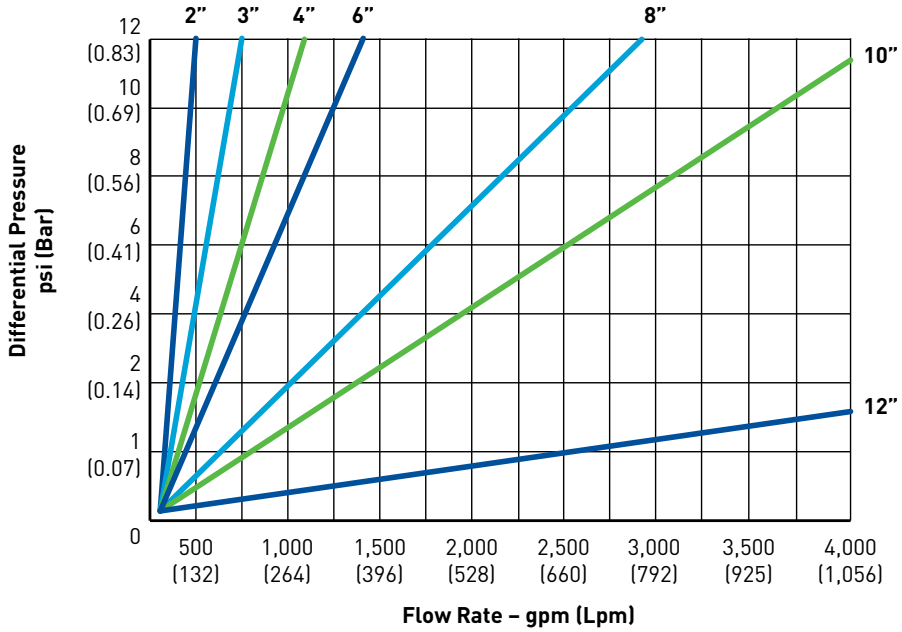

ORDERING INFORMATION

To create your ordering part number, use the part number configurator below.
Custom configurations available. Please contact customer service.

HOUSING EXAMPLE: C1212203FBCD15U

C1212 Housing (C1212), 20" cartridge (20), 3" (3)
Flange connection (F), Oulet connection located on opposite sides (B), Carbon steel (C)
Double open ended element (D), 150 psi (15), ASME Code (U) Stamp (U)

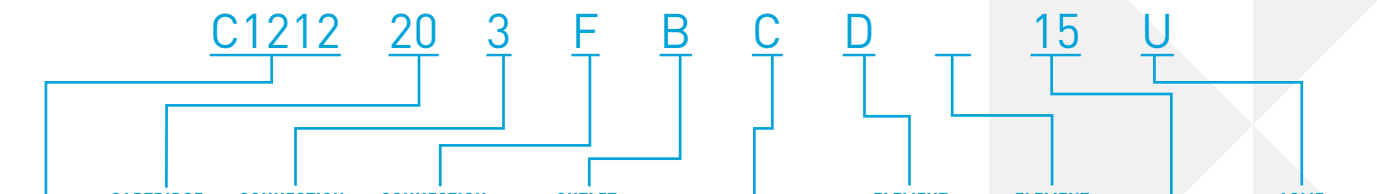

HOUSING	CARTRIDGE SIZE (IN.)	CONNECTION (IN.)	CONNECTION TYPE	OUTLET LOCATION	MATERIAL	ELEMENT BASE	ELEMENT TOP	PSI	ASME CODE
C1212 C1616 C1818 C2424 C3030 C3636 C4242 C4848	20 30 40	REFER TO DIMENSION CHARTS	F = Flange	A = Bottom B = Opposite Side	C = Carbon Steel 4 = 304 SS 4L= 304L SS 6 = 316 SS 6L = 316L SS	D = DOE 22 = 222 Style 26 = 226 Style	S = SOE F = Fin Style None = DOE	15 = 150 30 = 300	U = (U) Stamp None = No Stamp

[1]*Note: If double open end (DOE), it is only required once in the part number and will specify both top and base.*
Cartridges are not included but must be specified as to the type using when ordering the housing.
Carbon steel not recommended for water use as the epoxy coating is not designed as a corrosion inhibitor.

PENTAIR

FILTRATION & PROCESS
5730 NORTH GLEN PARK ROAD, MILWAUKEE, WI 53209
P: 262.238.4400 | F: 262.238.4404 | WWW.PENTAIRINDUSTRIAL.COM | CUSTOMER CARE: 800.279.9404

All Pentair trademarks and logos are owned by Pentair, Inc. or its affiliates. All other registered and unregistered trademarks and logos are the property of their respective owners. Because we are continuously improving our products and services, Pentair reserves the right to change specifications without prior notice. Pentair is an equal opportunity employer.
4003026 Rev D DE14 © 2014 Pentair Residential Filtration, LLC. All rights reserved.

****WARNING-SAFETY INFORMATION****

1. The housings in this catalog, if improperly used, can cause serious injury or death
2. Always wear proper protective clothing for the liquid being filtered. Check your M.S.D.S. for any instructions or suggestions.
3. Do not run housing in excess of the rated pressure or temperature found on the housing tank label.
4. Check chemical compatibility of selected o-ring and housing material before housing installation.
5. Do not open housing when the system is under pressure; always relieve all pressure through housing before opening of housing lid.
6. *Stop all flow of liquid before opening of lid*.
7. Bolt housing to floor, as tipping may occur when lid is opened.

Do not operate over 150 PSI working pressure

MODEL **LR2**: maximum flow rate of **400** gallons per minute
MODEL **LR3**: maximum flow rate of **600** gallons per minute
MODEL **LR4**: maximum flow rate of **800** gallons per minute
MODEL **LR6**: maximum flow rate of **1200** gallons per minute
MODEL **LR8**: maximum flow rate of **1600** gallons per minute
MODEL **LR12**: maximum flow rate of **2000** gallons per minute
MODEL **LR17**: maximum flow rate of **3500** gallons per minute

RECEIVING INSTRUCTIONS:

1. Uncrate the housing(s) and discard any shipping materials
2. Place housing in the desired location on a flat surface, securing the four support legs to the base.

INSTALLATION INSTRUCTIONS:

*** flow to the housing should be turned off***

1. Place housing on pipe connections
   a. N.P.T./Coupling style – We do not recommend using any type of liquid sealant due to contamination of the pipe that may occur.
   b. Flange style – put a small amount of clean, heavy oil on one side of the gaskets, place oiled side down onto existing flanges to hold gaskets.
2. Please note the labeling of the inlet and outlet connections for proper installation. Tighten housing with proper tension to seal housing onto existing pipe or flange. Note: housing has been factory pressure tested to assure a leak proof vessel. If leaking occurs, check for improper connections.
3. Remove lid from housing by turning eye nuts until loosened and swing them down. Using the Lid Lift Handle, swing the lid until full view of the inner housing area is gained.
4. Check inner housing and pipe connections for foreign material and discard any items that have entered during shipping or unpacking.
5. Make sure that the strainer baskets are pushed fully into housing grooves. If using a filter bag, seat bag fully into strainer basket to assure a leak-proof seal between bag and basket. For best results, bag should be fully extended into the basket.
6. Close lid and alternately tighten the eye nuts until lid is fully seated onto the O-ring gasket.
7. Housing is now ready for start-up.

START-UP OF HOUSING

1. Loosen vent plug to allow air to escape from housing.
2. Slowly open the inlet to gradually fill the housing body.
3. When housing body is full (liquid escapes from top vent), close the vent.
4. Open the outlet connection and fully open the inlet connection. Housing is now operating properly.

REMOVAL OF SPENT ELEMENT:

1. When the housing reaches your pre-determined differential pressure, stop flow to the housing and relieve housing pressure through housing drain. Remove enough liquid to show top of basket flange.
2. Loosen eye nuts on housing and, using the Lid Lift Handle, swing the lid to gain full access to the inside of housing.
3. If using a liquid bag, pull the element out of the basket and discard the element in accordance with any required local and federal laws.
4. Remove filter baskets and clean thoroughly.
5. Housing debris and sludge should be removed to prolong filter efficiencies.
6. Replace filter baskets and bags into housings as noted in Installation Instructions above.

RECOMMENDED MAINTENANCE:

Periodic checks should be made on all housing lid and basket o-rings to ensure no cuts or damage has incurred that would cause the housing not to seal. If housing parts become damaged or worn, replace immediately.

OPTIONAL REPLACEMENT PARTS LIST

CB*LB	Buna Lid O-ring
LLHM	Lid Lift Handle
ENM	Eye Nut
REM	Rod End
CBAM	Clevis Bolt Assembly
PER APPLICATION **	Filter Bags
PER APPLICATION **	Filter Basket

* Insert outside diameter of housing model #
** Full line of replacement bags and baskets are available

SMITH-COOPER® INTERNATIONAL

USA 800-766-0076
Fax 323-890-4456
www.smithcooper.com
Los Angeles, CA
Chicago, IL
Atlanta, GA
Vancouver, WA
Houston, TX

Series 0160

CI Wafer / DI Lug Butterfly Valves

- Wafer Body - Cast Iron
- Lug Body - Ductile Iron
- 200 psi 2"-12" / 150 psi 14"-16"
- Buna-N Seat up to 180˚F/82˚C
- EPDM Seat up to 220˚F/104˚C
- Stainless steel stem
- Disc: ductile iron-nickel plated, aluminum bronze or stainless steel
- Phenolic backed cartridge seat
- 24", 36", 48", 60" & 72" extensions
- Fusion bonded epoxy coating
- MSS SP-67/API 609
- ISO 9001:2008 factory
- Installs between ANSI Class 125/150 flanges
- Top flange: ISO 5211
- Not designed for dead-end or steam service

Size IN	Torque				Wafer Weight		Lug Weight	
	75 psi IN / LB	100 psi IN / LB	150 psi IN / LB	200 psi IN / LB	Lever LB	Gear LB	Lever LB	Gear LB
2	135	140	160	170	6.6	18.7	11.5	22.7
2-1/2	145	150	170	190	8.2	20.3	12.3	23.6
3	225	230	240	260	9.0	21.2	12.8	24.0
4	370	390	410	450	11.9	24.0	22.0	33.3
5	570	600	650	690	17.2	28.7	28.7	39.9
6	890	940	1,040	1,100	19.0	30.4	31.1	42.3
8	1,600	1,700	1,900	2,100	32.0	47.8	48.1	61.7
10	2,560	2,760	3,160	3,500	48.5	60.6	70.1	83.8
12	3,800	4,100	4,750	5,400	80.5	112.0	113.0	147.7
14	4,800	5,150	6,000	–	–	134.0	–	199.0
16	6,250	7,000	8,300	–	–	181.0	–	265.0

CI Wafer / DI Lug Butterfly Valves

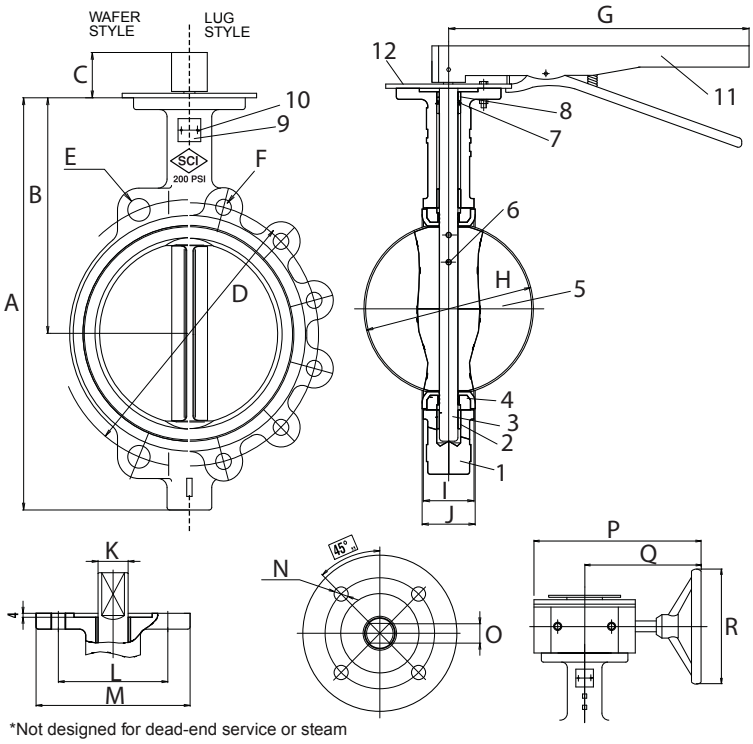

*Not designed for dead-end service or steam

No.	Part	Material
1	Wafer Body	Cast Iron ASTM A126
1	Lug Body	Ductile Iron ASTM A536
2	Bushing	PTFE
3	Stem	ASTM A582 SS416 ASTM A276 SS316 w/ SS316 Disc
4	Liner	Buna-N or EPDM
5	Disc	Aluminium Bronze ASTM C954 Ductile Iron Nickel Plated ASTM A536 SS316 / CF8M ASTM A276
6	Taper Pin	SS316 ASTM A276
7	O-ring	Buna-N or EPDM
8	Bushing	PTFE
9	Plate Rivet	Aluminium
10	Name Plate	Aluminium
11	Handle	Malleable Iron

Size	A	B	C	D	E	F	G	H	I	J	K	L	M	N	O	P	Q	R	Cap Screw
IN	IN	IN	IN	IN	IN		IN	IN	IN	IN	IN	IN	IN	IN	IN	IN	IN	IN	Length (lug)
2	9.5	6.3	1.3	4.75	0.75	4 x 5/8"-11 UNC	10.5	2.1	1.7	1.8	0.50	1.97	2.6	0.28	0.40	7.9	5.8	5.9	1.25
2-1/2	10.4	6.9	1.3	5.50	0.75	4 x 5/8"-11 UNC	10.5	2.5	1.8	1.9	0.50	1.97	2.6	0.28	0.40	7.9	5.8	5.9	1.50
3	10.9	7.1	1.3	6.00	0.75	4 x 5/8"-11 UNC	10.5	3.1	1.8	1.9	0.50	1.97	2.6	0.28	0.40	7.9	5.8	5.9	1.50
4	12.4	7.9	1.3	7.50	0.75	8 x 5/8"-11UNC	10.5	4.1	2.1	2.2	0.62	2.76	3.5	0.39	0.47	7.9	5.8	5.9	1.75
5	13.4	8.4	1.3	8.50	0.88	8 x 3/4"-10UNC	10.5	4.9	2.1	2.3	0.74	2.76	3.5	0.39	0.55	7.9	5.8	5.9	1.75
6	14.4	8.9	1.3	9.50	0.88	8 x 3/4"-10UNC	10.5	6.1	2.2	2.3	0.74	2.76	3.5	0.39	0.55	7.9	5.8	5.9	2.00
8	17.1	10.2	1.6	11.75	0.88	8 x 3/4"-10UNC	14.1	8.0	2.4	2.5	0.87	4.02	4.9	0.47	0.66	12.4	9.4	11.8	2.25
10	19.5	11.5	1.6	14.25	1.00	12 x 7/8"- 9UNC	14.1	9.9	2.6	2.8	1.12	4.02	4.9	0.47	0.86	12.4	9.4	11.8	2.25
12	22.8	13.3	1.6	17.00	1.00	12 x 7/8"- 9UNC	14.1	11.9	3.0	3.2	1.24	4.02	4.9	0.47	0.94	12.2	8.9	11.8	2.50
14	25.0	14.5	1.8	18.75	1.12	12 x 1"- 8UNC	n/a	13.1	3.0	3.1	1.24	4.02	4.9	0.47	0.94	12.2	8.9	11.8	2.50
16	27.9	15.7	2.0	21.25	1.12	12 x 1"- 8UNC	n/a	15.3	3.4	3.5	1.31	5.51	6.9	0.71	1.10	15.7	10.6	11.8	2.50

Example Fig: 0160WSEL040
Description: Wafer style - 316 Disc - EPDM Seat - Lever Handle - 4"

Valve Style		Disc Material		Seat		Operator		Size	
0160W	Wafer	S	316 Stainless steel	E	EPDM	L	10 Position Lever Handle	020	2
0160L	Lug	D	Nickel Plated Ductile Iron	N	Buna-N	O	Gear Operator	024	2-1/2
		A	Aluminum Bronze*					030	3
								040	4
								050	5
								060	6
								080	8
								010	10
								012	12
								014	14
								016	16

Example Fig: 0160XT020240
Description: Extension - 2" Valve - 24" Length

Extension Kit		Valve Size		Length	
0160XT	Extension Kit	020	2	240	24
		024	2-1/2	360	36
		030	3	480	48
		040	4	600	60
		050	5	720	72
		060	6		
		080	8		
		010	10		
		012	12		
		014	14		
		016	16		

Fliteway Technologies, Inc.

Feed Pump VFD - Control Panel

2129 East Birchwood Ave. Cudahy, WI 53110

(414) 483-5600 1-800-236-3580 FAX (414) 483-1957

FEED PUMP SKID #2

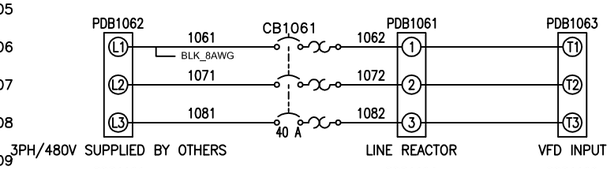

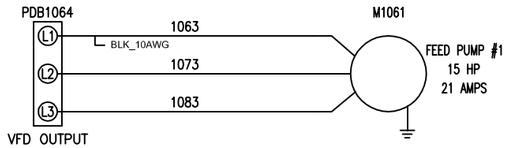

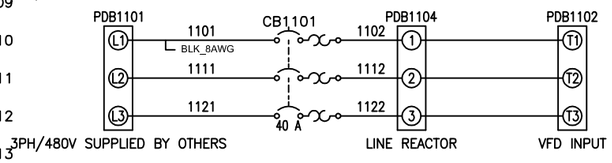

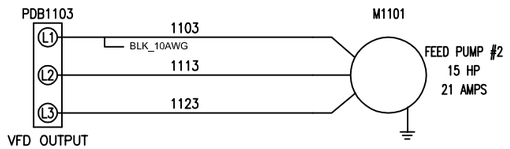

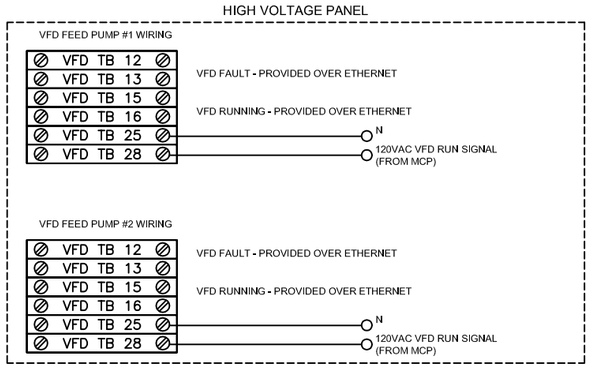

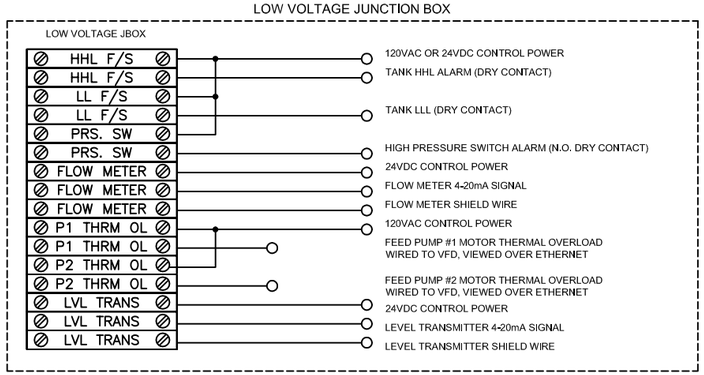

TREAT WATER PUMP SKID #2

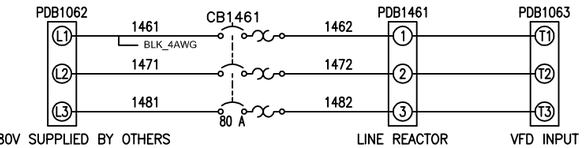

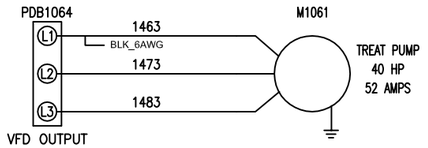

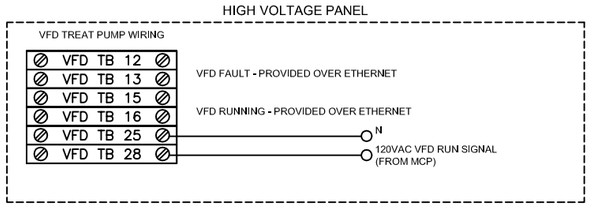

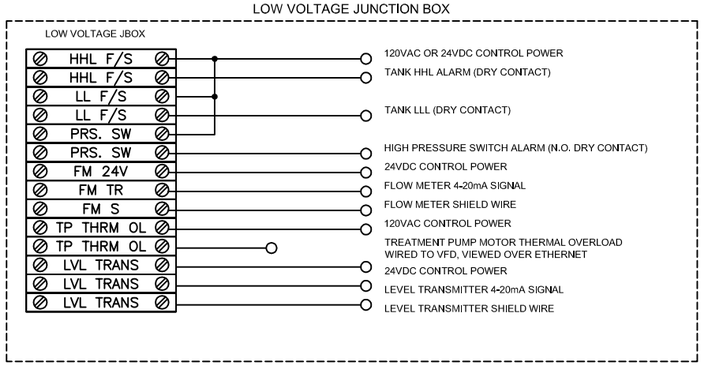

THIS PRINT AND ITS CONTENTS ARE THE PROPERTY OF FLITEWAY AND MUST NOT BE USED FOR ANY PURPOSE NOT AUTHORIZED BY FLITEWAY. DO NOT DISCLOSE, REPRODUCE OR OTHERWISE USE THIS PRINT OR ITS CONTENTS IN ANY MANNER DETRIMENTAL TO THE INTEREST OF FLITEWAY WITHOUT FLITEWAY'S PRIOR WRITTEN CONSENT. FLITEWAY RESERVES ALL RIGHTS OF DESIGN AND INVENTION TO THE EXTENT PERMITTED BY LAW.

CAD SYSTEM	UNITS
ACADE	IN
SCALE	FORMAT
1:1	D

Fliteway Technologies, Inc.
2129 East Birchwood Ave.
Cudahy, WI 53110

DRAWN BY	Q #	DESCRIPTION
Josh	Q14617	
DESIGNED FOR	Drawing Number	
TECHSAS, Inc.	PAGE 1 OF 1	

PLOTTED: 12-15-2015

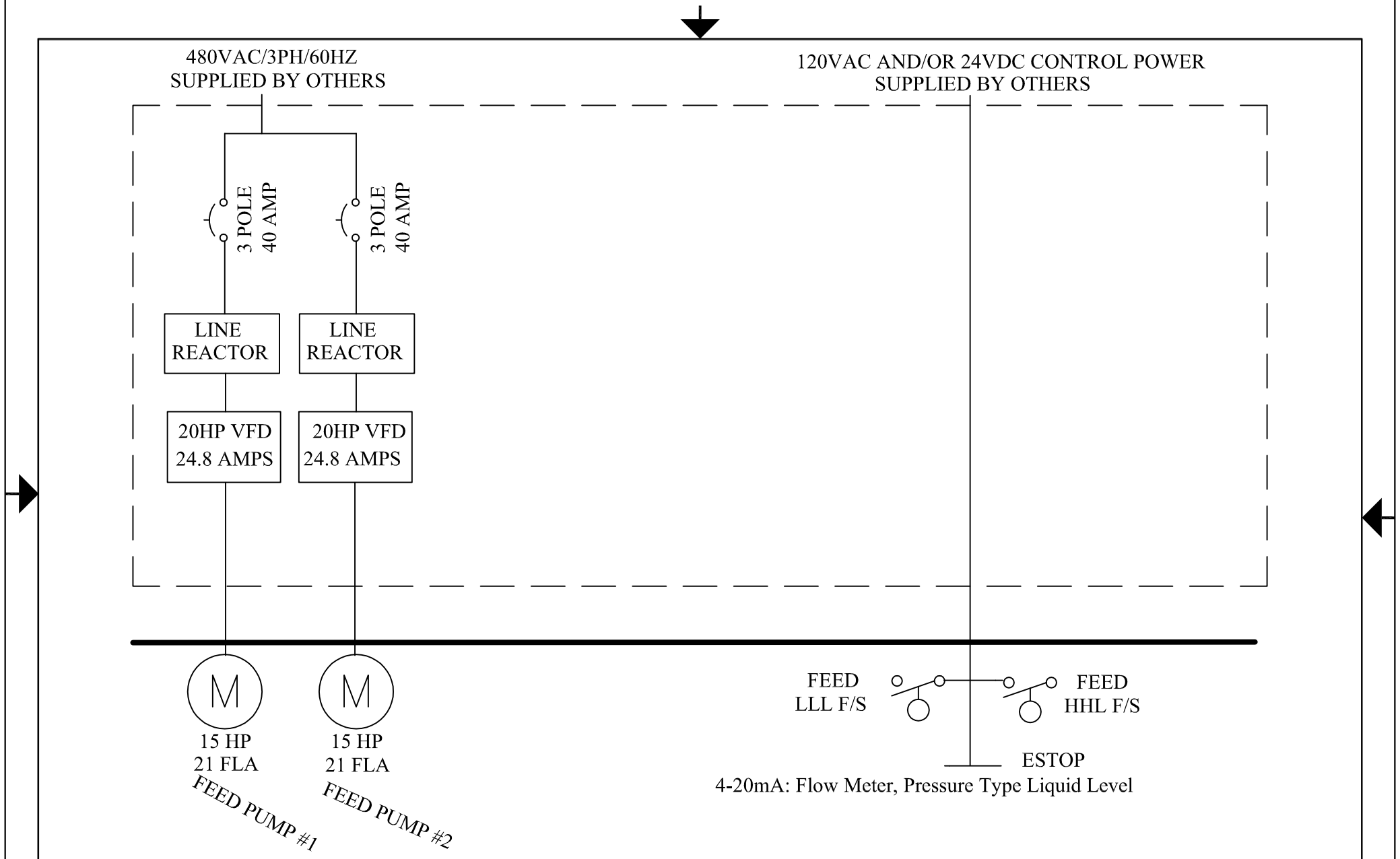

THIS DRAWING IS THE PROPERTY OF
Fliteway Technologies, Inc
2129 East Birchwood Avenue
Cudahy, WI 53110
414.483.5600 414.483.1957
AND IS NOT BE REPRODUCTED
WITH OUT WRITTEN PREMISSION

ONE LINE ELECTRICAL DIAGRAM

FEED PUMP SKID #2

12/15/15

TECHSAS, Inc.

SIZE	FSCM NO.	DWG NO.	REV
		Q14617	0

SCALE NONE

SHEET

Allen-Bradley

PowerFlex 700 Adjustable Frequency AC Drive

Topic	Page
Product Overview	2
Certifications and Specifications	7
Design Considerations	12
Drive, Fuse and Circuit Breaker Ratings	24
Cable Recommendations	33
Power Wiring	34
I/O Wiring	44
Mounting	49
Dimensions and Weights	53
PowerFlex 700 Packaged Drives	77
Drive Options	78

LISTEN. THINK. SOLVE.®

Allen-Bradley • Rockwell Software

Rockwell Automation

Additional Resources

These documents contain additional information concerning related products from Rockwell Automation.

Resource	Description
PowerFlex 700 Adjustable Frequency AC Drive Installation Instructions – Frames 0…6, publication 20B-IN0019	Provides detailed information about installation and start-up.
PowerFlex 700 Adjustable Frequency AC Drive Installation Instructions – Frames 7…10, publication 20B-IN0014	
PowerFlex 700 Standard Control User Manual, publication 20B-UM001	Provides detailed information on: • Parameters and programming • Faults, alarms, and troubleshooting
PowerFlex 700 Vector Control User Manual (v4.001 & up), publication 20B-UM002	
PowerFlex 70 and PowerFlex 700 Reference Manual, publication PFLEX-RM001	Provides detailed application specific information for programming and configuring the PowerFlex 700 drive.
PowerFlex 70 Enhanced Control and PowerFlex 700 Vector Control Reference Manual, publication PFLEX-RM004	
Wiring and Grounding Guidelines for Pulse Width Modulated (PWM) AC Drives, publication DRIVES-IN001	Provides basic information needed to properly wire and ground PWM AC drives.
Safety Guidelines for the Application, Installation and Maintenance of Solid State Control, publication SGI-1.1	Provides general guidelines for the application, installation, and maintenance of solid-state control.
Preventive Maintenance of Industrial Control and Drive System Equipment, publication DRIVES-TD001	Provides a guide to performing preventive maintenance.
Guarding Against Electrostatic Damage, publication 8000-4.5.2	Provides practices for guarding against electrostatic damage (ESD).
Product Certifications website, http://ab.com	Provides declarations of conformity, certificates, and other certification details.

You can view or download publications at http://www.rockwellautomation.com/literature/. To order paper copies of technical documentation, contact your local Allen-Bradley distributor or Rockwell Automation sales representative.

Product Overview

The PowerFlex 700 AC drive offers outstanding performance in an easy-to-use drive that you have come to expect from Rockwell Automation. This world-class performance comes in a small and competitively priced package. The PowerFlex 700 AC drive is designed to control three-phase induction motors in applications with requirements ranging from the simplest speed control to the most demanding torque control. The drive has volts per hertz, sensorless vector and vector control. Vector control includes Allen-Bradley's patented Force™ Technology which provides world class motor control.

Flexible Packaging and Mounting

- **IP20, NEMA / UL Type 1** – For conventional mounting inside or outside a control cabinet. Conduit plate is removable for easy installation and replacement without disturbing conduit.
- **IP54, NEMA / UL Type 12** – Stand-alone, wall mount drives are available for dust tight applications with power ratings from 75 to 200 Hp (Frames 5 & 6).
- **IP54, NEMA / UL Type 12** – Flange mount drives with an IP00, NEMA / UL Type Open front. These can be installed in a user supplied cabinet to meet IP54, NEMA / UL Type 12. This allows the majority of heat to be exhausted out the back of the cabinet while keeping the cabinet protected. Power ratings range from 75 to 700 Hp (Frames 5...10).
- **Zero Stacking**™ – Frame 0...6 drives can be mounted next to each other with no reduction of surrounding air temperature rating (50°C). This unique bookshelf design also allows access to one drive without disturbing another.

Space Saving Hardware Features

- **Integral EMC Filtering** plus built-in DC bus choke common mode cores and common mode capacitors provides a compact, all-in-one package solution for meeting EMC requirements, including CE in Europe. Frames 0...6 only (Frames 7...10 meet CE when installed per recommendations).
- **Internal Communications** allow the user to integrate the drive into the manufacturing process. Status indicators for all internal communication options are visible on the cover for easy setup and monitoring of drive communications. Users can easily manage information from shop floor to top floor and seamlessly integrate their complete system as they control, configure and collect data.
- **Integral Dynamic Brake Transistor** delivers a cost effective means of switching regenerative energy without costly external chopper circuits. These internal transistors are available in power ratings from 0.5 to 200 Hp.
- **Internal Dynamic Brake Resistor** (up to 25 Hp) requires no extra panel space, and supplies a large amount of braking torque for short periods.

Easy to Use Human Interface Tools

The PowerFlex 7-Class AC drives provide common Human Interface tools that are familiar and easy to use. These include the LCD Human Interface modules and PC-based configuration tools.

- LCD Human Interface modules provide:
  - Large and easy to read 7 line x 21 character backlit display
  - Variety of languages (English, French, German, Italian, Spanish, Portuguese, Dutch)
  - Alternate function keys for shortcuts to common tasks
  - “Calculator-like” number pad for fast and easy data entry (Full Numeric version only)
  - Control keys for local start, stop, speed, and direction
  - Remote versions for panel mount application

Outstanding Control and Performance

Multiple motor control algorithms allow performance matched to the application need:

- **Volts/Hertz** for simple Fan and Pump applications.
- **Sensorless Vector** for high torque production over a wide speed range.
- **Vector** for outstanding torque regulation and excellent low speed/zero speed performance (w/Vector Control cassette).

The PowerFlex 700 drive's Vector Control uses Allen-Bradley's patented Force™ Technology which provides excellent low-speed performance - whether it is operated with or without feedback. While this industry-leading control provides the highest level of drive performance, it is as easy to use as any general purpose drive available.

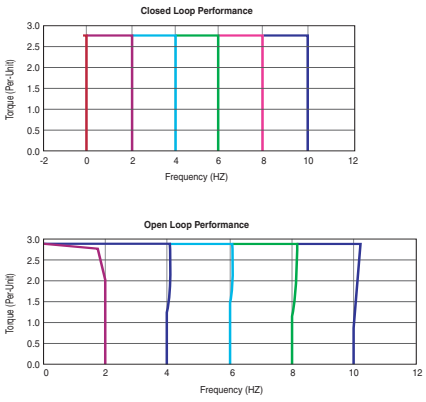

Drives Features

- Fast-acting **Current Limit** and **Bus Voltage Regulation** result in maximum accel/decel without tripping.
- **High speed analog inputs** improve drive response to torque or speed commands.
- **Programming flexibility** allows parameters to be linked within the drive.
- **Flying Start** delivers smooth and instantaneous connection into rotating loads, regardless of commanded direction, without the need for any speed feedback.
- **Integral Process PI Control** can eliminate the need for a separate process loop controller.
- **Inertia Ride-Through** offers tripless operation during a prolonged power outage by using the rotating energy stored in high inertia, low-friction loads.
- **Position Indexer/Speed Profiler** uses a 16 step indexer to provide point-to-point positioning or velocity profiling based on encoder counts, digital inputs, parameter levels or time.
- **TorqProve**™ assures control of the load when transferring control between the drive and a mechanical brake.
- **Speed Regulation** - Open Loop or Closed Loop
  - **Slip Compensation** delivers a minimum 0.5% speed regulation without feedback hardware.
  - **Droop** allows drives to load share without fighting each other.
  - **Encoder Feedback** provides up to 0.001% speed regulation for the tightest application requirements.
- **Torque Regulation** - Open Loop or Closed Loop
  - **Open Loop** torque regulation provides ±5% regulation.
  - **Encoder Feedback** provides ±2% regulation and the ability to hold full load at zero speed.

Unsurpassed Capability in Network Communications

PowerFlex drives are fully compatible with the wide variety of Allen-Bradley DPI™ communication adapters, offering the following benefits:

BACnet®	ControlNet™	DeviceNet™	EtherNet/IP™	LonWorks™	Modbus RTU	PROFIBUS™	Remote I/O(1)	RS485 DF1	USB	Description
	✔	✔	✔							**(Unconnected Messaging)** permits other network devices (e.g. PanelView™) to communicate directly to a drive without routing the communication through the network scanner.
✔	✔	✔	✔					✔	✔	**Adapter Routing** - Plug PC into one drive and talk to all other Allen-Bradley drives on same network, without being routed through network scanner.
✔	✔	✔	✔	✔	✔	✔	✔	✔	✔	Access to 100% of all parameters over the network.
✔		✔	✔			✔				**AutoBaud** capability makes initial connections less problematic.
		✔								**Change of State** significantly reduces network traffic by configuring control messages to be sent only upon customer defined states. Very flexible configuration for each node (Example: "reference must change by more than 5%").
		✔	✔							**Peer Control** provides master-slave type control between drives, where one or more slave drives (consumers) can run based on the status of a master drive (producer), which can also significantly reduce network traffic.
		✔								**ADR (Automatic Device Replacement)** saves significant time and effort when replacing a drive, by allowing the scanner to be configured to automatically detect a new drive and download the required parameter settings.
✔	✔	✔	✔	✔	✔	✔	✔	✔	✔	**Flexible Fault Configuration** - Adapters can be programmed to take fault based actions as ramp to stop, coast-to-stop and hold last state, as well as send user configurable logic control and speed reference values. In addition, different actions can be taken based on whether the network experienced a serious problem (broken cable etc.) versus network idle condition (PLC set to "Program").

(1) This item has Silver Series status. For information, refer to http://www.ab.com/silver.

Catalog Number Explanation

20B	D	2P1	A	3	A	Y	N	A	E	C	0	NN	AD
a	*b*	*c1…c5*	*d*	*e*	*f*	*g*	*h*	*i*	*j*	*k*	*l*	*m*	*n*

a

Drive	
Code	Type
20B	PowerFlex 700

b

Voltage Rating				
Code	Voltage	Ph.	Prechg.	Frames
B	240V AC	3	-	0…6
C	400V AC	3	-	0…10
D	480V AC	3	-	0…10
E	600V AC	3	-	0…6
F	690V AC	3	-	5…6
H	540V DC	-	N	5…6, 10
J	650V DC	-	N	5…6, 10
N	325V DC	-	Y	5…6
P	540V DC	-	Y	5…9
R	650V DC	-	Y	5…9
T	810V DC	-	Y	5…6
W	932V DC	-	Y	5…6

c1

ND Rating				
208/240V, 60 Hz Input				
Code	208V Amps	240V Amps	Hp	Frame
2P2	2.5	2.2	0.5	0
4P2	4.8	4.2	1.0	0
6P8	7.8	6.8	2.0	1
9P6	11	9.6	3.0	1
015	17.5	15.3	5.0	1
022	25.3	22	7.5	1
028	32.2	28	10	2
042	48.3	42	15	3
052	56	52	20	3
070	78.2	70	25	4
080	92	80	30	4
104	120	104	40	5
130	130	130	50	5
154	177	154	60	6
192	221	192	75	6
260	260	260	100	6

c2

ND Rating			
400V, 50 Hz Input			
Code	Amps	kW	Frame
1P3	1.3	0.37	0
2P1	2.1	0.75	0
3P5	3.5	1.5	0
5P0	5.0	2.2	0
8P7	8.7	4.0	0
011	11.5	5.5	0
015	15.4	7.5	1
022	22	11	1
030	30	15	2
037	37	18.5	2
043	43	22	3
056	56	30	3
072	72	37	3
085	85	45	4
105	105	55	5
125	125	55	5
140	140	75	5
170	170	90	6
205	205	110	6
260	260	132	6
292	292	160	7
325	325	180	7
365	365	200	8
415	415	240	8
481	481	280	8
535	535	300	8
600	600	350	8
730	730	400	9
875	875	500	10

c3

ND Rating			
480V, 60 Hz Input			
Code	Amps	Hp	Frame
1P1	1.1	0.5	0
2P1	2.1	1.0	0
3P4	3.4	2.0	0
5P0	5.0	3.0	0
8P0	8.0	5.0	0
011	11	7.5	0
014	14	10	1
022	22	15	1
027	27	20	2
034	34	25	2
040	40	30	3
052	52	40	3
065	65	50	3
077	77	60	4
096	96	75	5
125	125	100	5
156	156	125	6
180	180	150	6
248	248	200	6
292	292	250	7
325	325	250	7
365	365	300	8
415	415	350	8
481	481	400	8
535	535	450	8
600	600	500	8
730	730	600	9
875	875	700	10

c4

ND Rating			
600V, 60 Hz Input			
Code	Amps	Hp	Frame
1P7	1.7	1.0	0
2P7	2.7	2.0	0
3P9	3.9	3.0	0
6P1	6.1	5.0	0
9P0	9.0	7.5	0
011	11	10	1
017	17	15	1
022	22	20	2
027	27	25	2
032	32	30	3
041	41	40	3
052	52	50	3
062	62	60	4
077	77	75	5
099	99	100	5
125	125	125	6
144	144	150	6

20B	D	2P1	A	3	A	Y	N	A	E	C	0	NN	AD
a	*b*	*c1…c5*	*d*	*e*	*f*	*g*	*h*	*i*	*j*	*k*	*l*	*m*	*n*

c5

ND Rating			
690V, 50 Hz Input			
Code	Amps	kW	Frame
052	52	45	5
060	60	55	5
082	82	75	5
098	98	90	6
119	119	110	6
142	142	132	6

d

Enclosure	
Code	Enclosure
A	IP20, NEMA/UL Type 1
F ♠	Open/Flange Mount Front: IP00, NEMA/UL Type Open Back/Heatsink: IP54, NEMA Type 12
N ♣	Open/Flange Mount Front: IP00, NEMA/UL Type Open Back/Heatsink: IP54, NEMA 12
G ♠	Stand-Alone/Wall Mount IP54, NEMA/UL Type 12
U	Roll-In Front: IP00, NEMA/UL Type Open Back/Heatsink: IP54, NEMA 12 Frames 8 & 9 Only

♠ Only available for Frame 5 & Frame 6 drives, 400…690V.

♣ Only available for Frames 7…10.

e

HIM	
Code	Operator Interface
0	Blank Cover
3	LCD Display, Full Numeric Keypad
J ♦	Remote (Panel Mount), IP66, NEMA/UL Type 12 Full Numeric LCD HIM
K ♦	Remote (Panel Mount), IP66, NEMA/UL Type 12 Prog. Only LCD HIM

♦ Available with Frames 5…6 Stand-Alone IP54 drives (Enclosure Code "G").

f

Documentation	
Code	Type
A	Manual
N	No Manual
Q	No Shipping Package (Internal Use Only)

g

Brake	
Code	w/Brake IGBT ‡
Y	Yes
N	No

‡ Brake IGBT is standard on Frames 0-3, optional on Frames 4-6 and not available on Frames 7…10.

h

Internal Braking Resistor	
Code	w/Resistor
Y	Yes ★
N	No

★ Not available for Frame 3 drives or larger.

i

Emission		
Code	CE Filter §	CM Choke
A	Yes	Yes
B #	Yes	No
N	No	No

§ Note: 600V class drives below 77 Amps (Frames 0-4) are declared to meet the Low Voltage Directive. It is the responsibility of the user to determine compliance to the EMC directive. Frames 7…10, 400/480V AC drives (Voltage Rating codes "C" and "D") meet CE certification requirements when installed per recommendations.

Only available for 208…240V Frame 0-3 drives.

j

Comm Slot	
Code	Network Type
C	ControlNet (Coax)
D	DeviceNet
E	EtherNet/IP
N	None

k

Control & I/O		
Code	Control	I/O Volts
A	Standard ♦	24V DC/AC
B	Standard ♦	115V AC
C	Vector Δ	24V DC
D	Vector Δ	115V AC
N	Standard	None

Δ Vector Control Option utilizes DPI Only.

♦ Frame 0…6 drives only.

l

Feedback	
Code	Type
0	None
1	Encoder, 12V/5V

m

Future Use

n

Special Firmware (Frames 0…6 Only)	
Code	Type
AD ♦	60 Hz Maximum
AE ♦	Cascading Fan/Pump Control
AX ♦	82 Hz Maximum
BA ♦	Pump Off (for pump jack)

♦ Must be used with Vector Control option C or D (Position k). Positions m-n are only required when custom firmware is supplied.

Certifications and Specifications

Certifications

Certification [1]	Description	Frames			
		0…4		5…6	7…10
		230…480V	600V		
ABS	American Bureau of Shipping MA Certificate 08-HS303172B-3-PDA for auxiliary services on AB Classed vessels and offshore platforms	✔		✔	
CE	Certified by Rockwell Automation to be in conformity with the essential requirements of the applicable European Directives and the standards referenced below have been applied:				
	2006/95/EC (Low Voltage Directive) EN 50178 Electronic Equipment for use in Power Installations	✔	✔	✔	✔
	2004/108/EC (EMC Directive) EN 61800-3 Adjustable Speed electrical power drive systems - Part 3: EMC requirements and specific test methods.	✔		✔	✔[2]
RCM	Certified by Rockwell Automation to be in conformity with the requirements of the applicable Australian legislation and the standards referenced: IEC 61800-3.	✔		✔	✔
c-UL-us	Listed to UL508C and C22.2 No. 14. Packaged drives may be listed to UL508A.	✔	✔	✔	✔
EAC	Low Voltage TR CU 004/2011 EMC TR CU 020/2011	✔	✔	✔	✔
EPRI /SEMIF47	EPRI Quality Star Certificates SEMIF47.115 and SEMIF47.127 for SEMI F47 compliance, only 480V units tested	✔		✔	
Functional Safety	EC-Type-Examination Certificate TUV 05 ATEX 7153 for directive 94/9/EC: Safe turn off of certified ATEX motors used in Group II Category (2) GD potentially explosive atmospheres.	✔	✔	✔	✔
Korean KC Registration	KCC-REM-RAA-20B Refer to the certificate of registration for specific drive catalog numbers that have this certification.	✔	✔	✔	✔
Lloyd's Register	Lloyd's Register Type Approval Certificate 08-HS303172B-3-PDA (marine certification)	✔		✔	
Trentec	Tested by Trentec to be compliant with AC156 Acceptance Criteria for Seismic Qualification Testing of Nonstructural Components and 2003 International Building Code for worst-case seismic level for USA excluding site class F	✔	✔	✔	
Designed to Meet Applicable Requirements	CMAA Specification #70 (Crane Manufacturers of America Assoc.)	✔	✔	✔	✔
	NFPA 70 – US National Electrical Code	✔	✔	✔	✔
	NEMA ICS 7.1 – Safety Standards for Construction and Guide for Selection, Installation, and Operation of Adjustable Speed Drive Systems	✔	✔	✔	✔
	IEC 61800-2 – Adjustable Speed Electrical Power Drive Systems - Part 2: General Requirements - Rating specifications for low voltage adjustable frequency AC power drive systems.	✔	✔	✔	✔

(1) See the product certifications website, http://www.rockwellautomation.com/products/certification for declarations of conformity, certificates, and other certification details.

(2) Frames 7…10 provided as IP00 or NEMA / UL Open style must be installed in a supplementary enclosure which provides adequate attenuation of radiated emissions in order to be compliant with EN 61800-3.

Environmental

Category	Specification				
Environment	Altitude:	1000 m (3300 ft) max. without derating			
	Maximum Surrounding Air Temperature without Derating - IP20, NEMA / UL Type Open: Frames 0…6 Frames 7…10	 0…50 °C (32…122 °F), typical. See Installation Instructions for details. 0…40 °C (32…104 °F) for chassis (heatsink) 0…65 °C (32…149 °F) for control (front of backplane)			
	Storage Temperature (all const.):	-40…70 °C (-40…158 °F)			
	Atmosphere:	**Important:** Drive **must not** be installed in an area where the ambient atmosphere contains volatile or corrosive gas, vapors or dust. If the drive is not going to be installed for a period of time, it must be stored in an area where it will not be exposed to a corrosive atmosphere.			
	Relative Humidity:	5 to 95% non-condensing			
	Shock:	15G peak for 11ms duration (±1.0 ms)			
	Vibration:	0.152 mm (0.006 in.) displacement, 1G peak			
	Surrounding Environment Pollution Degree Pollution Degree 1 & 2: Pollution Degree 3 & 4: (See page 11 for descriptions of each pollution degree rating.)	 All enclosures acceptable. Enclosure that meets or exceeds IP54, NEMA / UL Type 12 required.			
	Sound:	Frame	Fan Velocity	Sound Level	Note: Sound pressure level is measured at 2 meters.
		0	30 CFM	58 dB	
		1	30 CFM	59 dB	
		2	50 CFM	57 dB	
		3	120 CFM	61 dB	
		4	190 CFM	59 dB	
		5	200 CFM	71 dB	
		6	300 CFM	72 dB	
		7	756 CFM	74 dB	
		8	1200 CFM	78 dB	
		9	2800 CFM	82 dB	
		10 Inv.	1850 CFM	78 dB	
		10 Cnv.	1200 CFM	78 dB	

Technical Specifications

Category	Specification						
Protection	**Drive**	200…208V	240V	380/400V	480V	600V Frames 0…4	600/690V Frames 5…6
	AC Input Overvoltage Trip:	285V AC	285V AC	570V AC	570V AC	716V AC	818V AC
	AC Input Undervoltage Trip:	120V AC	138V AC	233V AC	280V AC	345V AC	345V AC
	Bus Overvoltage Trip:	405V DC	405V DC	810V DC	810V DC	1013V DC	1162V DC
	Bus Undervoltage Shutoff/Fault:	153V DC	153V DC	305V DC	305V DC	381V DC	437V DC
	Nominal Bus Voltage:	281V DC	324V DC	540V DC	648V DC	810V DC	932V DC
	All Drives						
	Heat Sink Thermistor:	Monitored by microprocessor overtemp trip					
	Drive Overcurrent Trip Software Overcurrent Trip: Hardware Overcurrent Trip:	 200% of rated current (typical) 220…300% of rated current (dependent on drive rating)					
	Line transients:	up to 6000 volts peak per IEEE C62.41-1991					
	Control Logic Noise Immunity:	Showering arc transients up to 1500V peak					
	Power Ride-Thru:	15 milliseconds at full load					
	Logic Control Ride-Thru:	0.5 seconds minimum, 2 seconds typical					
	Ground Fault Trip:	Phase-to-ground on drive output					
	Short Circuit Trip:	Phase-to-phase on drive output					
Electrical	Voltage Tolerance:	See page 12 for full power and operating range					
	Input Frequency Tolerance:	47…63 Hz					
	Input Phases:	Three-phase input provides full rating for all drives. Single-phase operation possible on certain drives and provides 50% of rated current (see Installation Instructions for details). Frames 0…7: Drive can be supplied as 6 pulse or 18 pulse in an engineered package.					
	Displacement Power Factor:	0.98 across entire speed range					
	Efficiency:	97.5% at rated amps, nominal line volts					
	Maximum Short Circuit Rating:	200,000 Amps symmetrical					
	Actual Short Circuit Rating:	Determined by AIC rating of installed fuse/circuit breaker					
	Drive to Motor Power Ratio Minimum Maximum	 Recommended not less than 1:2 ratio Recommended not greater than 2:1 ratio					

Category	Specification	
Control	Method:	Sine coded PWM with programmable carrier frequency. Ratings apply to all drives (refer to the *Derating Guidelines* in the PowerFlex Reference Manual). The drive can be supplied as 6 pulse or 18 pulse in a configured package.
	Carrier Frequency:	2, 4, 8, and 10 kHz. Drive rating based on 4 kHz. See the Input Protection Device tables in the Installation Instructions for exceptions.
	Output Voltage Range:	0 to rated motor voltage
	Output Frequency Range:	Standard Control – 0 to 400 Hz., Vector Control – 0 to 420 Hz
	Frequency Accuracy Digital Input: Analog Input:	 Within ±0.01% of set output frequency Within ±0.4% of maximum output frequency
	Frequency Control:	Speed Regulation - w/Slip Compensation (Volts per Hertz Mode) 0.5% of base speed across 40:1 speed range, 40:1 operating range 10 rad/sec bandwidth
		Speed Regulation - w/Slip Compensation (Sensorless Vector Mode) 0.5% of base speed across 80:1 speed range, 80:1 operating range 20 rad/sec bandwidth
		Speed Regulation - w/Feedback (Sensorless Vector Mode) 0.1% of base speed across 80:1 speed range, 80:1 operating range 20 rad/sec bandwidth
	Speed Control:	Speed Regulation - w/o Feedback (Vector Control Mode) 0.1% of base speed across 120:1 speed range, 120:1 operating range 50 rad/sec bandwidth
		Speed Regulation - w/Feedback (Vector Control Mode) 0.001% of base speed across 120:1 speed range, 1000:1 operating range, 250 rad/sec bandwidth
	Torque Regulation:	Torque Regulation - w/o Feedback ±5%, 600 rad/sec bandwidth
		Torque Regulation - w/Feedback ±2%, 2500 rad/sec bandwidth
	Selectable Motor Control:	Sensorless Vector with full tuning. Standard V/Hz with full custom capability. PF700 adds Vector Control.
	Stop Modes:	Multiple programmable stop modes including - Ramp, Coast, DC-Brake, Ramp-to-Hold and S-curve.
	Accel/Decel:	Two independently programmable accel and decel times. Each time may be programmed from 0…3600 seconds in 0.1 second increments.
	Intermittent Overload:	110% Overload capability for up to 1 minute, 150% Overload capability for up to 3 seconds.
	Current Limit Capability:	Proactive Current Limit programmable from 20…160% of rated output current. Independently programmable proportional & integral gain.
	Motor Overload Protection Frames 0…6 Standard Control: Frames 0…6 Vector Control: Frames 7…10 Vector Control:	 PowerFlex 700 drives with standard control, identified by an N, A, or B in position 15 of the catalog number, only provide Class 10 motor overload protection according to NEC article 430. They do not provide speed sensitive overload protection, thermal memory retention and motor over-temperature sensing according to NEC article 430.126 (A) (2). If such protection is needed in the end-use product, it must be provided by additional means. PowerFlex 700 drives with vector control, identified by a C or D in position 15 of the catalog number, provide class 10 motor overload protection according to NEC article 430 and motor over-temperature protection according to NEC article 430.126 (A) (2). UL 508C File E59272. Class 10 motor overload protection according to NEC article 430 and motor over-temperature protection according to NEC article 430.126 (A)(2). UL 508C File E59272.

Category	Specification					
Control (continued)	Digital/Analog Input Latency	Signal		Motor Control	Latency	
					Min.	Max	Typical
		Digital Input	Start	FVC	8.4 ms	10.4 ms	8.4 ms
				SVC	9.2 ms	16.0 ms	9.2 ms
			Stop	FVC	10.0 ms	12.4 ms	10.4 ms
				SVC	10.0 ms	12.0 ms	10.4 ms
		Analog Input	Torque 4 kHz PWM	FVC	772 µs	1.06 ms	840 µs
			Torque 2 kHz PWM	FVC	1.008 ms	1.46 ms	1.256 ms
			Speed	FVC	4.6 ms	8.6 ms	4.8 ms
			Speed	SVC	4.8 ms	12.4 ms	6.4 ms
Encoder	Type:	Incremental, dual channel					
	Supply:	12V, 250 mA. 12V, 10 mA minimum inputs isolated with differential transmitter, 250 kHz maximum.					
	Quadrature:	90°, ±27 degrees at 25 degrees C.					
	Duty Cycle:	50%, +10%					
	Requirements:	Encoders must be line driver type, quadrature (dual channel) or pulse (single channel), 8…15V DC output (4…6V DC when jumpers are in 5V position), single-ended or differential and capable of supplying a minimum of 10 mA per channel. Maximum input frequency is 250 kHz. The Encoder Interface Board accepts 12V DC square-wave with a minimum high state voltage of 7.0V DC. With the jumpers in the 5V position, the encoder will accept a 5V DC square-wave with a minimum high state voltage of 3.0V DC. In either jumper position, the maximum low state voltage is 0.4V DC.					

Pollution Degree Ratings According to EN 61800-5-1

Pollution Degree	Description
1	No pollution or only dry, non-conductive pollution occurs. The pollution has no influence.
2	Normally, only non-conductive pollution occurs. Occasionally, however, a temporary conductivity caused by condensation is to be expected, when the drive is out of operation.
3	Conductive pollution or dry non-conductive pollution occurs, which becomes conductive due to condensation, which is to be expected.
4	The pollution generates persistent conductivity caused, for example, by conductive dust, rain or snow.

Design Considerations

Input Voltage Tolerance

Drive Rating	Nominal Line Voltage	Nominal Motor Voltage	Drive Full Power Range	Drive Operating Range
200…240	200	200*	200…264	180…264
	208	208	208…264	
	240	230	230…264	
380…480	380	380*	380…528	342…528
	400	400	400…528	
	480	460	460…528	
500…600 (Frames 0…4 Only)	600	575*	575…660	432…660
500…690 (Frames 5 & 6 Only)	600	575*	575…660	475…759
	690	690	690…759	475…759

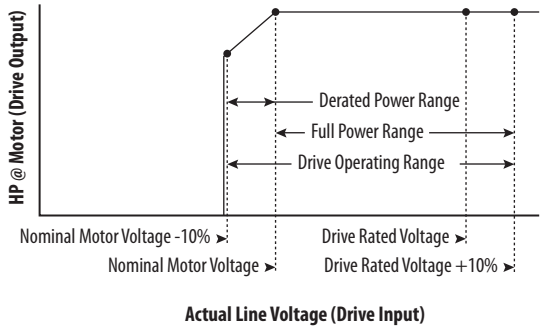

Drive Full Power Range = Nominal Motor Voltage to Drive Rated Voltage +10%.
Rated current is available across the entire Drive Full Power Range

Drive Operating Range = Lowest* Nominal Motor Voltage –10% to Drive Rated Voltage +10%.
Drive Output is linearly derated when Actual Line Voltage is less than the Nominal Motor Voltage

EXAMPLE Calculate the maximum power of a 5 Hp, 460V motor connected to a 480V rated drive supplied with 342V Actual Line Voltage input.

- Actual Line Voltage / Nominal Motor Voltage = 74.3%
- 74.3% × 5 Hp = 3.7 Hp
- 74.3% × 60 Hz = 44.6 Hz

At 342V Actual Line Voltage, the maximum power the 5 Hp, 460V motor can produce is 3.7 Hp at 44.6 Hz.

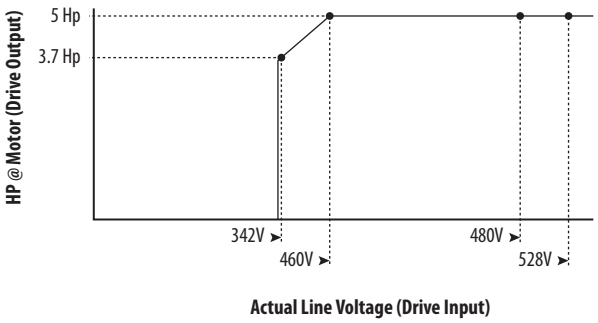

Approximate Watts Loss

The following tables list the watts loss data for drives running at full load, full speed and default carrier frequency.

Internal watts are those dissipated by the control structure of the drive and will be dissipated into the cabinet regardless of mounting style. External watts are those dissipated directly through the heatsink and will be outside the cabinet for flange mount and inside the cabinet for other mounting types.

Watts Loss – Frames 0...6

Voltage	ND Hp/kW	External Watts	Internal Watts	Total Watts Loss[1]
IP20, NEMA / UL Type 1				
240V	0.5	9	37	46
	1	22	39	61
	2	38	39	77
	3	57	41	98
	5	97	82	179
	7.5	134	74	208
	10	192	77	269
	15	276	92	368
	20	354	82	436
	25	602	96	698
	30	780	96	876
	40	860	107	967
	50	1132	138	1270
	60	1296	200	1496
	75	1716	277	1993
	100	1837	418	2255
400V	0.37	11	42	53
	0.75	19	44	63
	1.5	31	45	76
	2.2	46	46	93
	4	78	87	164
	5.5	115	79	194
	7.5	134	84	218
	11	226	99	326
	15	303	91	394
	18.5	339	102	441
	22	357	103	459
	30	492	117	610
	37	568	148	717
	45	722	207	930
	55	821	286	1107
	55	1130	397	1527
	90	1402	443	1845
	110	1711	493	2204
	132	1930	583	2513

Voltage	ND Hp/kW	External Watts	Internal Watts	Total Watts Loss[1]
480V	0.5	11	42	53
	1	19	44	63
	2	31	45	76
	3	46	46	93
	5	78	87	164
	7.5	115	79	194
	10	134	84	218
	15	226	99	326
	20	303	91	394
	25	339	102	441
	30	357	103	459
	40	492	117	610
	50	568	148	717
	60	722	207	930
	75	821	286	1107
	100	1130	397	1527
	125	1402	443	1845
	150	1711	493	2204
	200	1930	583	2513
600V	0.5	9	37	46
	1	14	40	54
	2	25	40	65
	3	41	42	83
	5	59	83	142
	7.5	83	75	157
	10	109	77	186
	15	177	93	270
	20	260	83	343
	25	291	95	385
	30	324	95	419
	40	459	109	569
	50	569	141	710
	60	630	195	825
	75	1053	308	1361
	100	1467	407	1874
	125	1400	500	1900
	150	1668	612	2280
690V	45	894	141	1034
	55	1056	195	1251
	75	1105	308	1412
	90	1389	407	1796
	110	1283	500	1783
	132	1592	612	2204

Voltage	ND Hp/kW	External Watts	Internal Watts	Total Watts Loss(1)
IP54, NEMA / UL Type 12				
480V	75	873	234	1107
	100	1237	290	1527
	125	1563	282	1845
	150	1874	330	2204
	200	2100	413	2513
600V	75	1091	270	1361
	100	1537	337	1874
	125	1584	316	1900
	150	1895	385	2280

(1) Worst case condition including Vector Control board, HIM, and Communication Module.

Watts Loss – Frames 7…10

Voltage	Frame	Hp Rating		Dissipation (Watts)(1)					
				AC Input			DC Input		
		ND	HD	External	Internal	Total	External	Internal	Total
IP20, NEMA / UL Type 1									
400/480V	7	250	200	3422	514	3936	3098	497	3595
		250	250	4224	618	4842	3848	599	4447
	8	300	250	3125	569	3694	2698	547	3245
		350	300	3588	681	4269	3091	655	3746
		400	350	4284	850	5133	3692	816	4510
		450	400	4850	1000	5850	4178	965	5143
		500	450	5278	2010	7288	4506	1969	6475
	9	600	500	8740	2270	11010	7752	2218	9970
	10	700	600	8595	2339	10934	7470	2280	9750

(1) Worst case condition including Vector Control board, HIM, and Communication Module.

Derating Guidelines

Altitude and Efficiency

Frame	Type	Derate
All	Altitude	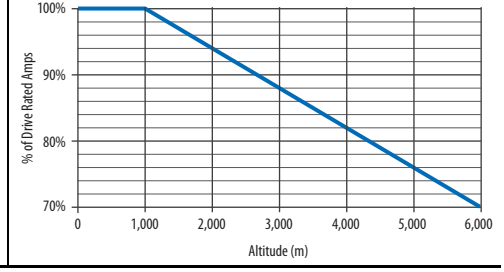

Frame	Type	Derate
All	Efficiency (typical)	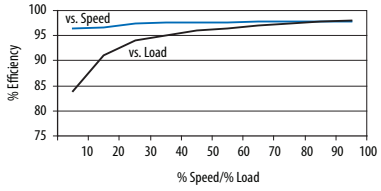

Ambient Temperature/Load – 240V AC

240 Volt Power Rating			Derating — — — 2 kHz ····· 4 kHz ———
ND Hp	**HD Hp**	**Cont. Amps**	
0.5…5.0	0.33…3.0	2.2…15.3	None
10…15	7.5…10	28…42	None
25	20	70	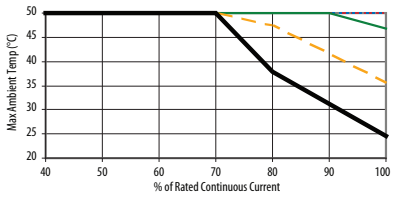
40	30	104 (80)	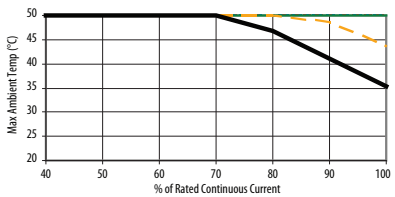
60	50	154 (130)	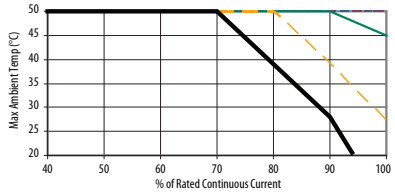
100	75	260 (205)	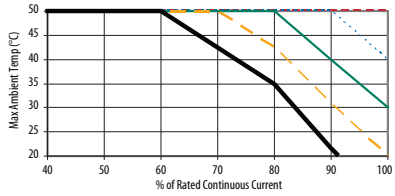

240 Volt Power Rating			Derating — — — 2 kHz ····· 4 kHz ———
ND Hp	**HD Hp**	**Cont. Amps**	
7.5	5.0	22	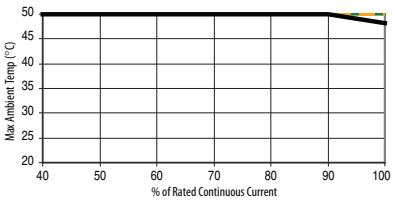
20	15	52	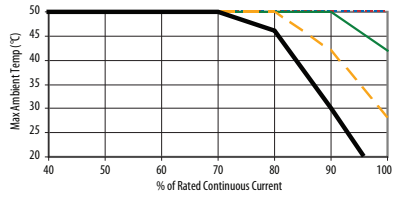
30	25	80	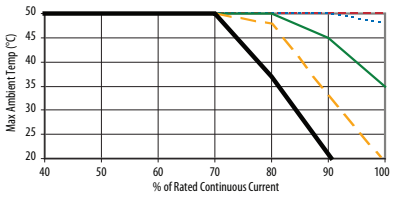
50	40	130 (104)	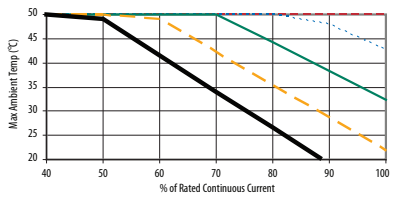
75	60	192 (154)	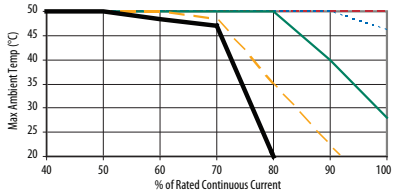

Ambient Temperature/Load – 400V AC

400 Volt Power Rating			Derating
ND kW	HD kW	Cont. Amps	2 kHz, 4 kHz, 6 kHz, 8 kHz, 10 kHz
0.37…7.5	0.25…5.5	1.3…15.4	None
15	11	30	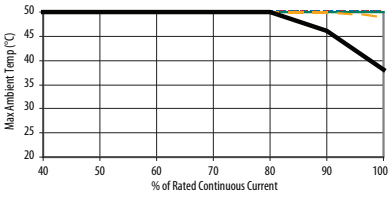
22	18.5	43	None
37	30	72	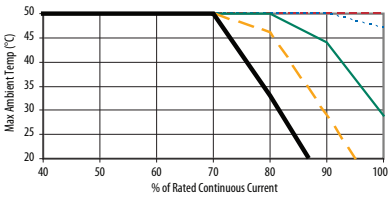
55	45	105 (85)	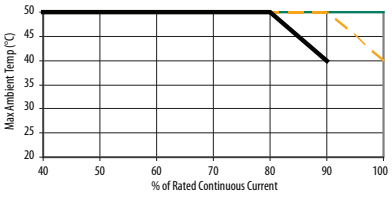
90	75	170 (140)	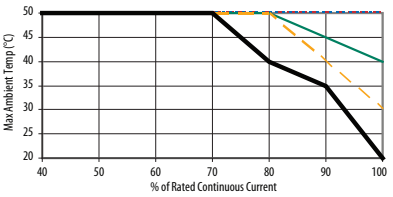
132	110	260 (205)	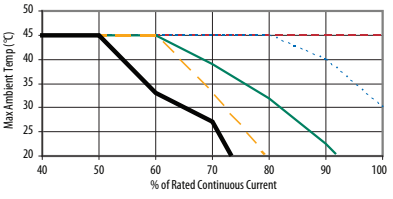

400 Volt Power Rating			Derating
ND kW	HD kW	Cont. Amps	2 kHz, 4 kHz, 6 kHz, 8 kHz, 10 kHz
11	7.5	22	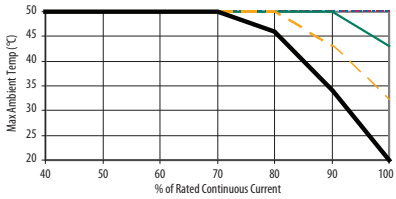
18.5	15	37	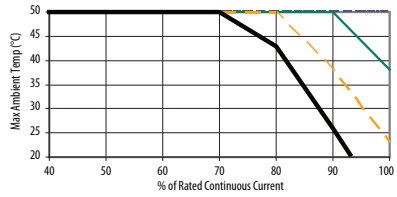
30	22	56	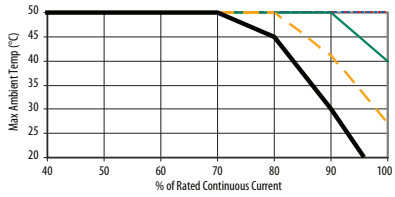
45	37	85 (72)	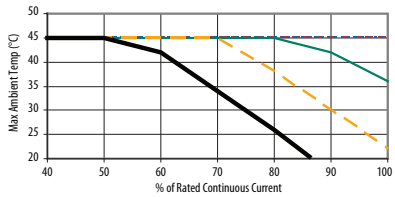
75	55	140 (105)	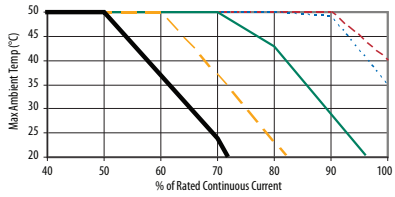
110	90	205 (170)	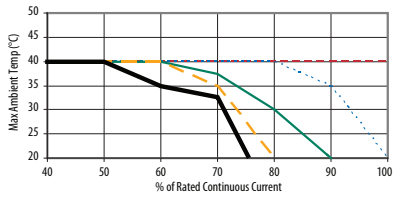
160	150	292 (263)	see 480 Volt, 292 (263) Amp on page 18
180	180	325 (325)	see 480 Volt, 325 (325) Amp on page 19
200	180	365 (325)	see 480 Volt, 365 (325) Amp on page 19
240	200	415 (365)	see 480 Volt, 415 (365) Amp on page 19
280	240	481 (415)	see 480 Volt, 481 (415) Amp on page 19
300	280	535 (481)	see 480 Volt, 535 (481) Amp on page 19
350	300	600 (535)	see 480 Volt, 600 (535) Amp on page 19
400	350	730 (600)	see 480 Volt, 730 (600) Amp on page 19
500	400	875 (700)	see 480 Volt, 875 (700) Amp on page 19

Ambient Temperature/Load – 480V AC

480 Volt Power Rating			Derating
ND Hp	HD Hp	Cont. Amps	2 kHz 4 kHz 6 kHz 8 kHz 10 kHz
0.5…10	0.33…7.5	1.1…14	None
20	15	27	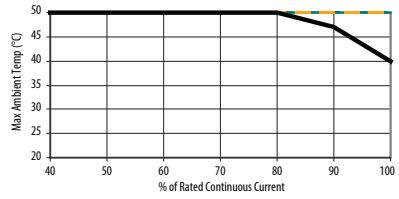
30	25	40	None
50	40	65	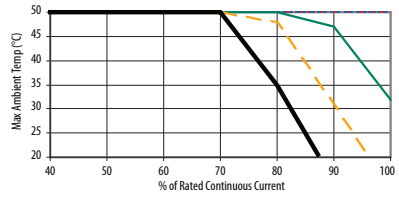
75	60	96 (77)	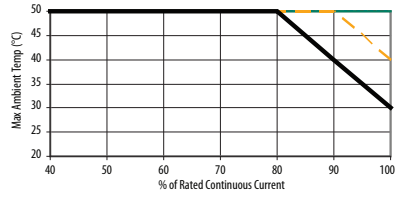
125	100	156 (125)	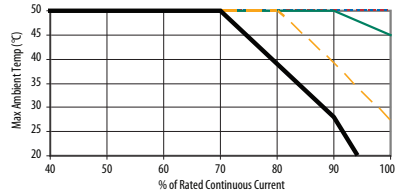
200	150	248 (180)	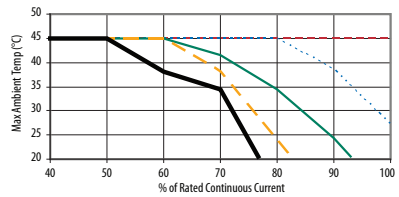

480 Volt Power Rating			Derating
ND Hp	HD Hp	Cont. Amps	2 kHz 4 kHz 6 kHz 8 kHz 10 kHz
15	10	22	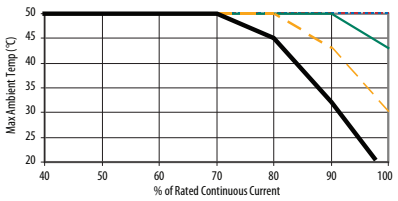
25	20	34	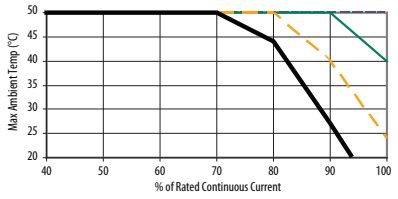
40	30	52	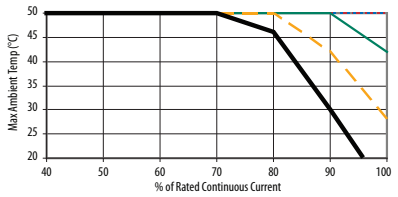
60	50	77 (65)	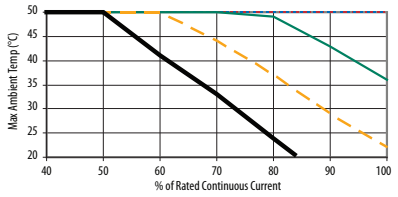
100	75	125 (96)	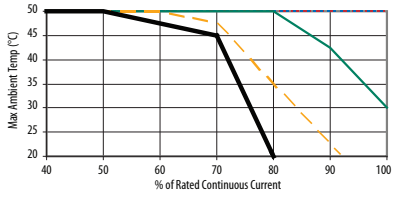
150	125	180 (156)	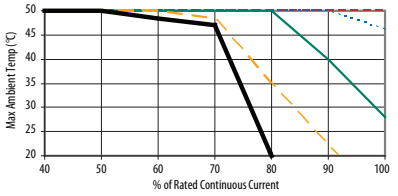
250	200	292 (263)	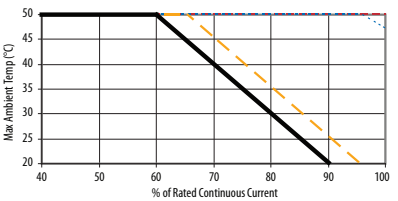

480 Volt Power Rating			Derating
ND Hp	HD Hp	Cont. Amps	2 kHz, 4 kHz, 6 kHz, 8 kHz, 10 kHz
250	250	325 (325)	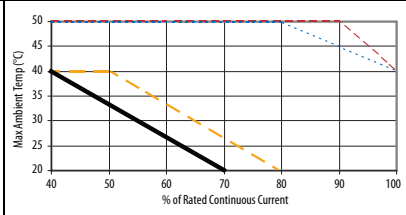
350	300	415 (365)	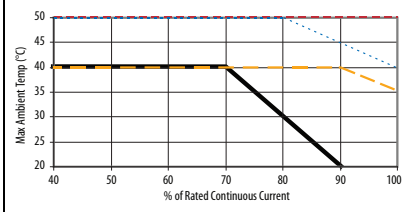
450	400	535 (481)	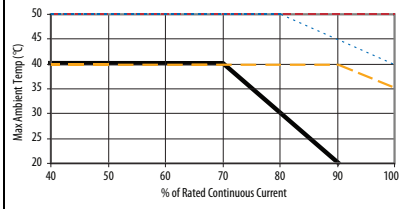
600	500	730 (600)	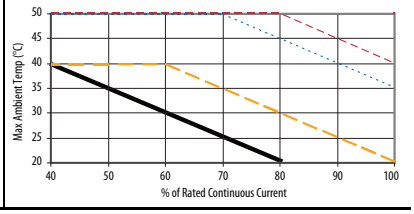

480 Volt Power Rating			Derating
ND Hp	HD Hp	Cont. Amps	2 kHz, 4 kHz, 6 kHz, 8 kHz, 10 kHz
300	250	365 (325)	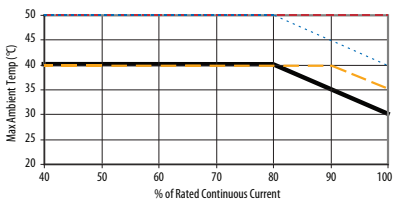
400	350	481 (415)	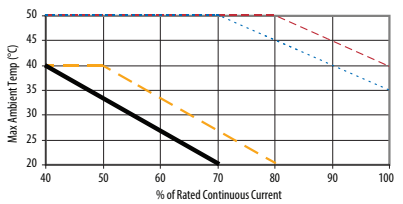
500	450	600 (535)	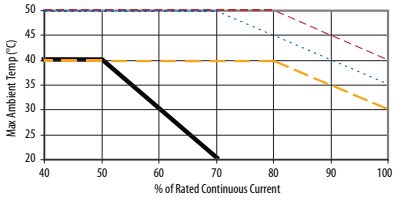
700	600	875 (700)	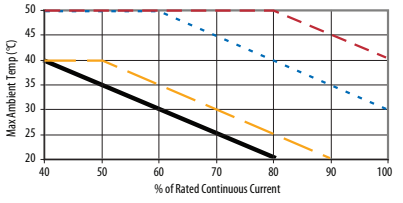

Ambient Temperature/Load – 600V AC

600 Volt Power Rating			Derating — — — 2 kHz ····· 4 kHz ———
ND Hp	**HD Hp**	**Cont. Amps**	
1.0…2.0	0.5…1.0	1.7…2.7	None
5.0	3.0	6.1	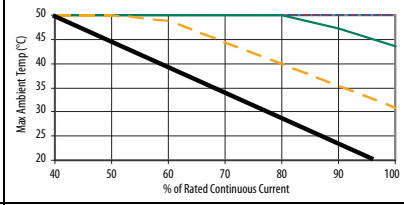
10	7.5	11	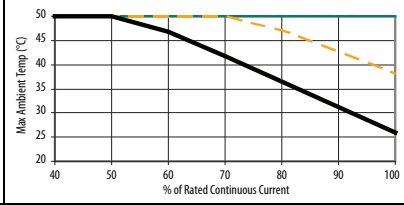
20	15	22	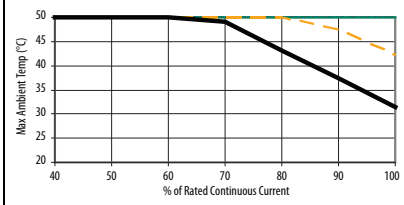
30	25	32	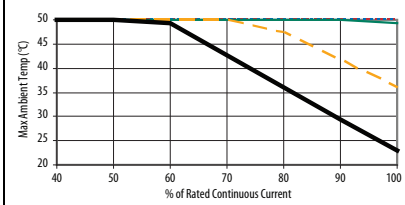
50	40	52	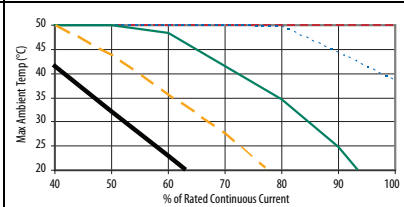
75	60	77 (63)	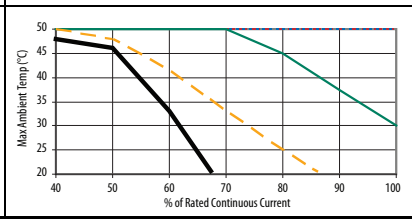

600 Volt Power Rating			Derating — — — 2 kHz ····· 4 kHz ———
ND Hp	**HD Hp**	**Cont. Amps**	
3.0	2.0	3.9	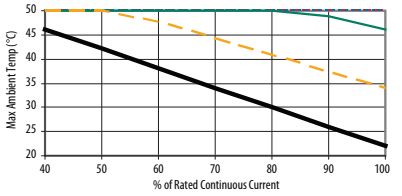
7.5	5.0	9	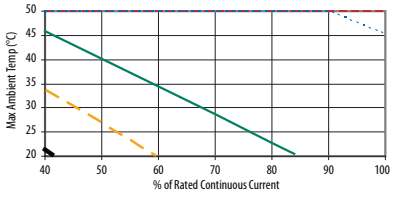
15	10	17	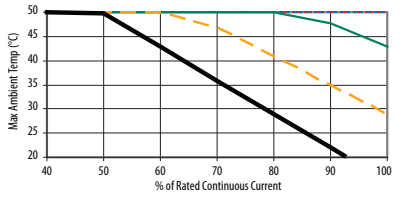
25	20	27	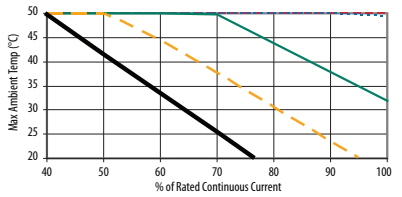
40	30	41	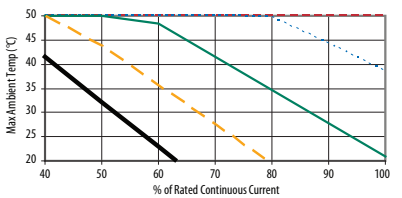
60	50	62	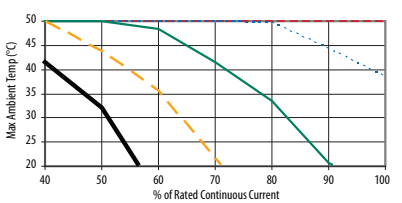
100	75	99 (77)	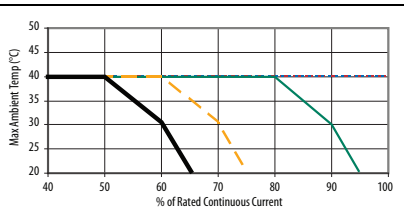

600 Volt Power Rating			Derating
ND Hp	HD Hp	Cont. Amps	2 kHz 4 kHz
125	100	125 (99)	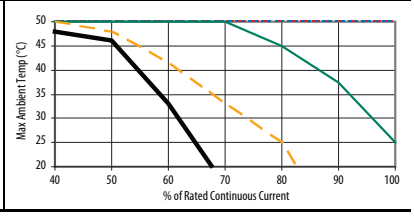

600 Volt Power Rating			Derating
ND Hp	HD Hp	Cont. Amps	2 kHz 4 kHz
150	125	144 (125)	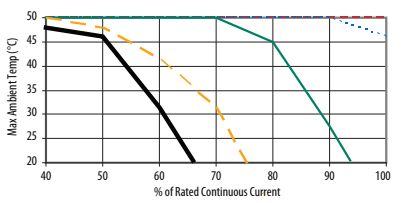

Ambient Temperature/Load – 690V AC

690 Volt Power Rating			Derating
ND kW	HD kW	Cont. Amps	2 kHz 4 kHz 6 kHz 8 kHz 10 kHz
45…55	37.5…45	52…60 (46…52)	None
90	75	98 (82)	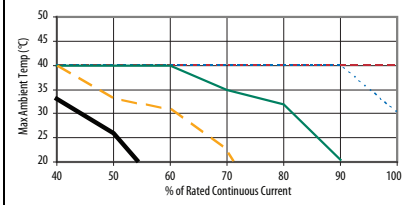
132	110	142 (119)	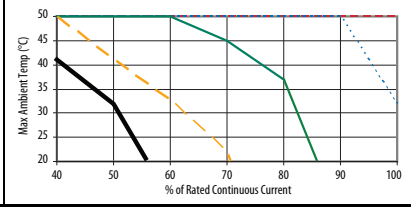

690 Volt Power Rating			Derating
ND kW	HD kW	Cont. Amps	2 kHz 4 kHz 6 kHz 8 kHz 10 kHz
75	55	82 (60)	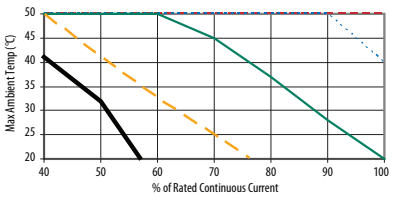
110	90	119 (98)	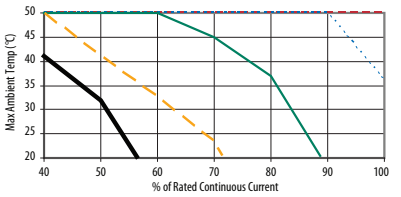

Single-Phase Input Power

The PowerFlex 700 drive is typically used with a three-phase input supply. Single-phase operation is possible with output current derated by 50% (at maximum ambient temperature of 25 °C) of the three-phase ratings.

208/240 Volt Single-Phase AC Input Ratings

240V Single-Phase AC Input						208V Single-Phase AC Input						
Drive Catalog Number	Frame	Hp Rating	Input Amps	Three-Phase Output		Drive Catalog Number	Frame	Hp Rating	Input Amps	Three-Phase Output		Temp.
				V AC	Amps					V AC	Amps	°C
20BB2P2	0	0.25	1.5	0-230	1.1	20BB2P2	0	0.25	1.7	0-200	1.3	25
20BB4P2	0	0.5	2.8	0-230	2.1	20BB4P2	0	0.5	3.2	0-200	2.4	25
20BB6P8	1	1	5.1	0-230	3.4	20BB6P8	1	1	5.9	0-200	3.9	25
20BB9P6	1	1.5	7.2	0-230	4.8	20BB9P6	1	1.5	8.3	0-200	5.5	25
20BB015	1	2.5	11.9	0-230	7.7	20BB015	1	2.5	13.6	0-200	8.8	25
20BB022	1	3.75	17.3	0-230	11	20BB022	1	3.75	19.9	0-200	12.7	25
20BB028	2	5	22.2	0-230	14	20BB028	2	5	25.7	0-200	16.1	25
20BB042	3	7.5	33.4	0-230	21	20BB042	3	7.5	38.5	0-200	24.2	25
20BB052	3	10	41.3	0-230	26	20BB052	3	10	44.6	0-200	28	25
20BB070	4	12.5	55.6	0-230	35	20BB070	4	12.5	62.3	0-200	39.1	25
20BB080	4	15	63.6	0-230	40	20BB080	4	15	73.3	0-200	46	25
20BB104	5	20	84.6	0-230	52	20BB104	5	20	97.9	0-200	60	25
20BB130	5	25	105.7	0-230	65	20BB130	5	25	106.1	0-200	65	25
20BB154	6	30	125.2	0-230	77	20BB154	6	30	144.4	0-200	88.5	25
20BB192	6	37.5	156.1	0-230	96	20BB192	6	37.5	180.3	0-200	110.5	25
20BB260	6	50	211.4	0-230	130	20BB260	6	50	212.1	0-200	130	25

380…480 Volt Single-Phase AC Input Ratings

480V Single-Phase AC Input						380…400V Single-Phase AC Input						
Drive Catalog Number	Frame	Hp Rating	Input Amps	Three-Phase Output		Drive Catalog Number	Frame	kW Rating	Input Amps	Three-Phase Output		Temp.
				V AC	Amps					V AC	Amps	°C
20BD1P1	0	0.25	0.7	0-460	0.6	20BC1P3	0	0.2	1	0-400	0.7	25
20BD2P1	0	0.5	1.4	0-460	1.1	20BC2P1	0	0.4	1.6	0-400	1.1	25
20BD3P4	0	1	2.3	0-460	1.7	20BC3P5	0	0.75	2.7	0-400	1.8	25
20BD5P0	0	1.5	3.4	0-460	2.5	20BC5P0	0	1.1	3.9	0-400	2.5	25
20BD8P0	0	2.5	6	0-460	4	20BC8P7	0	2	6.9	0-400	4.4	25
20BD011	0	3.75	8.2	0-460	5.5	20BC011	0	2.75	9.3	0-400	5.8	25
20BD014	1	5	10.9	0-460	7	20BC015	1	3.75	12.5	0-400	7.7	25
20BD022	1	7.5	17.3	0-460	11	20BC022	1	5.5	17.8	0-400	11	25
20BD027	2	10	21.4	0-460	13.5	20BC030	2	7.5	24.6	0-400	15	25
20BD034	2	12.5	27	0-460	17	20BC037	2	9.25	30.3	0-400	18.5	25
20BD040	3	15	31.8	0-460	20	20BC043	3	11	35.2	0-400	21.5	25
20BD052	3	20	41.3	0-460	26	20BC056	3	15	45.9	0-400	28	25
20BD065	3	25	51.6	0-460	32.5	20BC072	3	18.5	59.7	0-400	36	25
20BD077	4	30	62.6	0-460	38.5	20BC085	4	22.5	70.5	0-400	42.5	25
20BD096	5	37.5	78.1	0-460	48	20BC105	5	27.5	87	0-400	52.5	25
20BD125	5	50	101.6	0-460	62.5	20BC125	5	27.5	103.6	0-400	62.5	25
–	–	–	–	–	–	20BC140	5	37.5	117.4	0-400	70	25
20BD156	6	62.5	126.8	0-460	78	20BC170	6	45	142.6	0-400	85	25
20BD180	6	75	146.4	0-460	90	20BC205	6	55	171.9	0-400	102.5	25
20BD248	6	100	201.6	0-460	124	20BC260	6	66	220.6	0-400	130	25

600…690 Volt Single-Phase AC Input Rating

600V Single-Phase AC Input						690V Single-Phase AC Input						Temp.
Drive Catalog Number	Frame	Hp Rating	Input Amps	Three-Phase Output		Drive Catalog Number	Frame	kW Rating	Input Amps	Three-Phase Output		
				V AC	Amps					V AC	Amps	°C
20BE1P7	0	0.5	1.1	0-575	0.9	–	–	–	–	–	–	25
20BE2P7	0	1	1.8	0-575	1.4	–	–	–	–	–	–	25
20BE3P9	0	1.5	2.6	0-575	2	–	–	–	–	–	–	25
20BE6P1	0	2.5	4.6	0-575	3.1	–	–	–	–	–	–	25
20BE9P0	0	3.75	6.7	0-575	4.5	–	–	–	–	–	–	25
20BE011	1	5	8.5	0-575	5.5	–	–	–	–	–	–	25
20BE017	1	7.5	13.3	0-575	8.5	–	–	–	–	–	–	25
20BE022	2	10	17.5	0-575	11	–	–	–	–	–	–	25
20BE027	2	12.5	21.4	0-575	13.5	–	–	–	–	–	–	25
20BE032	3	15	25.4	0-575	16	–	–	–	–	–	–	25
20BE041	3	20	32.6	0-575	20.5	–	–	–	–	–	–	25
20BE052	3	25	41.3	0-575	26	20BF052	5	22.5	43.1	0-690	26	25
20BE062	4	30	50.4	0-575	31	20BF060	5	27.5	49.9	0-690	30	25
20BE077	5	37.5	62.6	0-575	38.5	20BF082	5	37.5	68.4	0-690	41	25
20BE099	5	50	80.5	0-575	49.5	20BF098	5	45	82	0-690	49	25
20BE125	6	62.5	101.6	0-575	62.5	20BF119	6	55	100	0-690	59.5	25
20BE144	6	75	117.1	0-575	72	20BF142	6	66	120.2	0-690	71	25

Drive, Fuse and Circuit Breaker Ratings

The PowerFlex 700 can be installed with input fuses or an input circuit breaker. National and local industrial safety regulations and/or electrical codes can determine additional requirements for these installations.

The tables on the following pages provide recommended AC line input fuse and circuit breaker information. See Fusing and Circuit Breakers below for UL and IEC requirements. Sizes listed are the recommended sizes based on 40 °C (104 °F) and the U.S. NEC. Other country, state, or local codes can require different ratings. Tables with DC link fuse recommendations for DC input drives are also provided.

Fusing

The recommended fuse types are listed below. If available current ratings do not match those listed in the tables provided, choose the next higher fuse rating.

- IEC – BS88 (British Standard) Parts 1 & 2, EN60269-1, Parts 1 & 2[(1)], type gG or equivalent must be used.
- UL – UL Class CC, T, RK1 or J must be used for Frames 0...6.
  UL Class T, RK1, J, or L must be used for Frames 7...10.

Circuit Breakers

The "non-fuse" listings in the following tables include inverse time circuit breakers, instantaneous trip circuit breakers (motor circuit protectors) and 140M self-protected combination motor controllers (Frames 0...6 only). If one of these is chosen as the desired protection method, the following requirements apply:

- IEC – Both types of circuit breakers and 140M self-protected combination motor controllers (Frames 0...6 only) are acceptable for IEC installations.
- UL – Only inverse time circuit breakers and the specified 140M self-protected combination motor controllers (Frames 0...6 only) are acceptable for UL installations.

(1) Typical designations include, but may not be limited to the following; Parts 1 & 2: AC, AD, BC, BD, CD, DD, ED, EFS, EF, FF, FG, GF, GG, GH.

208 Volt AC Input Protection Devices – Frames 0…6

Drive Catalog Number	Frame	Hp Rating		PWM Freq.	Temp. (11)	Input Ratings		Output Amps			Dual Element Time Delay Fuse		Non-Time Delay Fuse		Circuit Breaker (3)	Motor Circuit Protector (4)	140M Motor Protector with Adjustable Current Range (5)(6)			
		ND	HD	kHz	°C	Amps	kVA	Cont.	1 Min.	3 Sec.	Min. (1)	Max. (2)	Min. (1)	Max. (2)	Max. (8)	Max. (8)	Available Catalog Numbers - 140… (7)			Min. Enclosure Vol. (in.3) (14)
20BB2P2	0	0.5	0.33	4	50	1.9	0.7	2.5	2.8	3.8	3	6	3	10	15	3	M-C2E-B25	M-D8E-B25	–	7269
20BB4P2	0	1	0.75	4	50	3.7	1.3	4.8	5.6	7	6	10	6	17.5	15	7	M-C2E-B63	M-D8E-B63	–	7269
20BB6P8	1	2	1.5	4	50	6.8	2.4	7.8	10.4	13.8	10	15	10	30	30	15	M-C2E-C10	M-D8E-C10	M-F8E-C10	7269
20BB9P6	1	3	2	4	50	9.5	3.4	11	12.1	17	12	20	12	40	40	15	M-C2E-C16	M-D8E-C16	M-F8E-C16	7269
20BB015	1	5	3	4	50	15.7	5.7	17.5	19.3	26.3	20	35	20	70	70	30	M-C2E-C20	M-D8E-C20	M-F8E-C20	7269
20BB022	1	7.5	5	4	50	23	8.3	25.3	27.8	38	30	50	30	100	100	30	–	M-D8E-C25	M-F8E-C25	7269
20BB028	2	10	7.5	4	50	29.6	10.7	32.2	38	50.6	40	70	40	125	125	50	–	–	M-F8E-C32	7269
20BB042	3	15	10	4	50	44.5	16	48.3	53.1	72.5	60	100	60	175	175	70	–	–	M-F8E-C45	13630
20BB052	3	20	15	4	50	51.5	17.1	56	64	86	80	125	80	200	200	100	–	–	–	–
20BB070	4	25	20	4	50	72	25.9	78.2	93	124	90	175	90	300	300	100	–	–	–	–
20BB080	4	30	25	4	50	84.7	30.5	92	117	156	110	200	110	350	350	150	–	–	–	–
20BB104 (12)	5	40	–	4	50	113	40.7	120	132	175	150	250	150	475	350	150	–	–	–	–
		–	30	4	50	84.7	30.5	92	138	175	125	200	125	350	300	150	–	–	–	–
20BB130 (12)	5	50	–	4	50	141	44.1	130	143	175	175	275	175	500	375	250	–	–	–	–
		–	40	4	50	113	35.3	104	156	175	125	225	125	400	300	150	–	–	–	–
20BB154 (12)	6	60	–	4	50	167	60.1	177	195	266	225	350	225	500	500	250	–	–	–	–
		–	50	4	50	141	50.9	150	225	300	200	300	200	500	450	250	–	–	–	–
20BB192 (12)	6	75	–	4	50	208	75	221	243	308	300	450	300	600	600	400	–	–	–	–
		–	60	4	50	167	60.1	177	266	308	225	350	225	500	500	250	–	–	–	–
20BB260 (12)	6	100	–	2	45	255	91.9	260	286	390	300	575	300	750	750	400	–	–	–	–
		–	75	2	50	199	71.7	205	305	410	225	450	225	600	600	400	–	–	–	–

See page 29 for notes.

240 Volt AC Input Protection Devices – Frames 0…6

Drive Catalog Number	Frame	Hp Rating		PWM Freq.	Temp. (11)	Input Ratings		Output Amps			Dual Element Time Delay Fuse		Non-Time Delay Fuse		Circuit Breaker (3)	Motor Circuit Protector (4)	140M Motor Protector with Adjustable Current Range (5)(6)			
		ND	HD	kHz	°C	Amps	kVA	Cont.	1 Min.	3 Sec.	Min. (1)	Max. (2)	Min. (1)	Max. (2)	Max. (8)	Max. (8)	Available Catalog Numbers - 140… (7)			Min. Enclosure Vol. (in.3) (14)
20BB2P2	0	0.5	0.33	4	50	1.7	0.7	2.2	2.4	3.3	3	6	3	10	15	3	M-C2E-B25	M-D8E-B25	–	7269
20BB4P2	0	1	0.75	4	50	3.3	1.4	4.2	4.8	6.4	5	8	5	15	15	7	M-C2E-B63	M-D8E-B63	–	7269
20BB6P8	1	2	1.5	4	50	5.9	2.4	6.8	9	12	10	15	10	25	25	15	M-C2E-C10	M-D8E-C10	M-F8E-C10	7269
20BB9P6	1	3	2	4	50	8.3	3.4	9.6	10.6	14.4	12	20	12	35	35	15	M-C2E-C10	M-D8E-C10	M-F8E-C10	7269
20BB015	1	5	3	4	50	13.7	5.7	15.3	16.8	23	20	30	20	60	60	30	M-C2E-C16	M-D8E-C16	M-F8E-C16	7269
20BB022	1	7.5	5	4	50	19.9	8.3	22	24.2	33	25	50	25	80	80	30	–	M-D8E-C25	M-F8E-C25	7269
20BB028	2	10	7.5	4	50	25.7	10.7	28	33	44	35	60	35	100	100	50	–	–	M-F8E-C32	7269
20BB042	3	15	10	4	50	38.5	16	42	46.2	63	50	90	50	150	150	50	–	–	M-F8E-C45	13630
20BB052	3	20	15	4	50	47.7	19.8	52	63	80	60	100	60	200	200	100	–	–	–	–
20BB070	4	25	20	4	50	64.2	26.7	70	78	105	90	150	90	275	275	100	–	–	–	–
20BB080	4	30	25	4	50	73.2	30.5	80	105	140	100	180	100	300	300	100	–	–	–	–
20BB104 (12)	5	40	–	4	50	98	40.6	104	115	175	125	225	125	400	300	150	–	–	–	–
		–	30	4	50	73	30.5	80	120	160	100	175	100	300	300	100	–	–	–	–
20BB130 (12)	5	50	–	4	50	122	50.7	130	143	175	175	275	175	500	375	250	–	–	–	–
		–	40	4	50	98	40.6	104	156	175	125	225	125	400	300	150	–	–	–	–
20BB154 (12)	6	60	–	4	50	145	60.1	154	169	231	200	300	200	600	450	250	–	–	–	–
		–	50	4	50	122	50.7	130	195	260	175	275	175	500	375	250	–	–	–	–
20BB192 (12)	6	75	–	4	50	180	74.9	192	211	288	225	400	225	600	575	250	–	–	–	–
		–	60	4	50	145	60.1	154	231	308	200	300	200	600	450	250	–	–	–	–
20BB260 (12)	6	100	–	2	45	233	96.7	260	286	390	300	575	300	750	750	300	–	–	–	–
		–	75	2	50	169	70.1	205	305	410	225	450	225	600	600	250	–	–	–	–

See page 29 for notes.

400 Volt AC Input Protection Devices – Frames 0…6

Drive Catalog Number	Frame	kW Rating		PWM Freq.	Temp.	Input Ratings		Output Amps			Dual Element Time Delay Fuse		Non-Time Delay Fuse		Circuit Breaker (3)	Motor Circuit Protector (4)	140M Motor Protector with Adjustable Current Range(5)(6)			
		ND	HD	kHz	°C	Amps	kVA	Cont.	1 Min.	3 Sec.	Min. (1)	Max. (2)	Min. (1)	Max. (2)	Max. (8)	Max. (8)	Available Catalog Numbers - 140… (7)			Min. Enclosure Vol. (in.^{3}) (14)
20BC1P3	0	0.37	0.25	4	50 (11)	1.1	0.77	1.3	1.4	1.9	3	3	3	6	15	3	M-C2E-B16	–	–	7269
20BC2P1	0	0.75	0.55	4	50 (11)	1.8	1.3	2.1	2.4	3.2	3	6	3	8	15	3	M-C2E-B25	M-D8E-B25	–	7269
20BC3P5	0	1.5	0.75	4	50 (11)	3.2	2.2	3.5	4.5	6	6	7	6	12	15	7	M-C2E-B40	M-D8E-B40	–	7269
20BC5P0	0	2.2	1.5	4	50 (11)	4.6	3.2	5	5.5	7.5	6	10	6	20	20	7	M-C2E-B63	M-D8E-B63	–	7269
20BC8P7	0	4	2.2	4	50 (11)	7.9	5.5	8.7	9.9	13.2	15	17.5	15	30	30	15	M-C2E-C10	M-D8E-C10	M-F8E-C10	7269
20BC011	0	5.5	4	4	50 (11)	10.8	7.5	11.5	13	17.4	15	25	15	45	45	15	M-C2E-C16	M-D8E-C16	M-F8E-C16	7269
20BC015	1	7.5	5.5	4	50 (11)	14.4	10	15.4	17.2	23.1	20	30	20	60	60	20	M-C2E-C20	M-D8E-C20	M-F8E-C20	7269
20BC022	1	11	7.5	4	50 (11)	20.6	14.3	22	24.2	33	30	45	30	80	80	30	–	M-D8E-C25	M-F8E-C25	7269
20BC030	2	15	11	4	50 (11)	28.4	19.7	30	33	45	35	60	35	120	120	50	–	–	M-F8E-C32	7269
20BC037	2	18.5	15	4	50 (11)	35	24.3	37	45	60	45	80	45	125	125	50	–	–	M-F8E-C45	7269
20BC043	3	22	18.5	4	50 (11)	40.7	28.2	43	56	74	60	90	60	150	150	60	–	–	–	–
20BC056	3	30	22	4	50 (11)	53	36.7	56	64	86	70	125	70	200	200	100	–	–	–	–
20BC072	3	37	30	4	50 (10)(11)	68.9	47.8	72	84	112	90	150	90	250	250	100	–	–	–	–
20BC085 (12)	4	45	–	4	45 (11)	81.4	56.4	85	94	128	110	200	110	300	300	150	–	–	–	–
		–	37	4	45 (11)	68.9	47.8	72	108	144	90	175	90	275	300	100	–	–	–	–
20BC105 (12)	5	55	–	4	50 (9)	100.5	69.6	105	116	158	125	225	125	400	300	150	–	–	–	–
		–	45	4	50 (9)	81.4	56.4	85	128	170	110	175	110	300	300	150	–	–	–	–
20BC125 (12)	5	55	–	4	50 (9)	121.1	83.9	125	138	163	150	275	150	500	375	250	–	–	–	–
		–	45	4	50 (9)	91.9	63.7	96	144	168	125	200	125	375	375	150	–	–	–	–
20BC140 (12)	5	75	–	4	40 (9)	136	93.9	140	154	190	200	300	200	400	400	250	–	–	–	–
		–	55	4	40 (9)	101	69.6	105	157	190	150	225	150	300	300	150	–	–	–	–
20BC170 (12)	6	90	–	4	50 (9)	164	126	170	187	255	250	375	250	600	500	250	–	–	–	–
		–	75	4	50 (9)	136	103	140	210	280	200	300	200	550	400	250	–	–	–	–
20BC205 (12)	6	110	–	4	40 (9)	199	148	205	220	289	250	450	250	600	600	400	–	–	–	–
		–	90	4	40 (9)	164	126	170	255	313	250	375	250	600	500	250	–	–	–	–
20BC260 (12)	6	132	–	2	45 (9)	255	177	260	286	390	350	550	350	750	750	400	–	–	–	–
		–	110	2	50 (9)	199	138	205	308	410	250	450	250	600	600	400	–	–	–	–

See page 29 for notes.

400 Volt AC Input Protection Devices – Frames 7…10

Drive Catalog Number (12)	Frame	kW Rating		PWM Freq.	Temp. (16)	Input Ratings		Output Amps			Dual Element Time Delay Fuse		Non-Time Delay Fuse		Circuit Breaker (3)	Motor Circuit Protector (4)
		ND	HD	kHz	°C	Amps	kVA	Cont.	1 Min.	3 Sec.	Min. (1)	Max. (2)	Min. (1)	Max. (2)	Max. (8)	Max. (8)
20BC292	7	160		4	40	293	203	292	322	438	375	650	375	850	850	400
			150	4	40	264	183	263	395	526	350	550	350	550	750	400
20BC325	7	180		4	40	326	226	325	358	488	425	700	425	950	950	600
			180	4	40	326	226	325	488	650	425	700	425	950	950	600
20BC365	8	200		2	40	366	253	365	402	548	475	800	475	1000	1000	600
			180	2	40	326	226	325	488	650	425	700	425	950	950	600
20BC415	8	240		2	40	416	288	415	457	623	525	900	525	1200	1200	600
			200	2	40	366	253	365	548	730	475	800	475	1000	1000	600
20BC481	8	280		2	40	483	334	481	530	722	600	1000	600	1400	1400	700
			240	2	40	416	288	415	623	830	525	900	525	1200	1200	600
20BC535	8	300		2	40	537	372	535	589	803	700	1200	700	1600	1600	700
			280	2	40	483	334	481	722	962	600	1000	600	1400	1400	700
20BC600	8	350		2	40	602	417	600	660	900	750	1300	750	1800	1800	800
			300	2	40	537	371	535	803	1070	700	1200	700	1600	1600	700
20BC730	9	400		2	40	702	486	730	803	1095	900	1500	900	2100	2100	900
			350	2	40	602	417	600	900	1200	750	1300	750	1800	1800	800
20BC875	10	500		2	40	877	608	875	963	1313	1100	1900	1100	2600	2600	1200
			400	2	40	877	486	700	1050	1400	900	1500	900	2100	2100	900

See page 29 for notes.

480 Volt AC Input Protection Devices – Frames 0…6

Drive Catalog Number	Frame	Hp Rating		PWM Freq.	Temp.	Input Ratings		Output Amps			Dual Element Time Delay Fuse		Non-Time Delay Fuse		Circuit Breaker (3)	Motor Circuit Protector (4)	140M Motor Protector with Adjustable Current Range (5)(6)			
		ND	HD	kHz	°C	Amps	kVA	Cont.	1 Min.	3 Sec.	Min. (1)	Max. (2)	Min. (1)	Max. (2)	Max. (8)	Max. (8)	Available Catalog Numbers - 140… (7)			Min. Enclosure Vol. (in.3) (14)
20BD1P1	0	0.5	0.33	4	50 (11)	0.9	0.7	1.1	1.2	1.6	3	3	3	6	15	3	M-C2E-B16	–	–	7269
20BD2P1	0	1	0.75	4	50 (11)	1.6	1.4	2.1	2.4	3.2	3	6	3	8	15	3	M-C2E-B25	–	–	7269
20BD3P4	0	2	1.5	4	50 (11)	2.6	2.2	3.4	4.5	6	4	8	4	12	15	7	M-C2E-B40	M-D8E-B40	–	7269
20BD5P0	0	3	2	4	50 (11)	3.9	3.2	5	5.5	7.5	6	10	6	20	20	7	M-C2E-B63	M-D8E-B63	–	7269
20BD8P0	0	5	3	4	50 (11)	6.9	5.7	8	8.8	12	10	15	10	30	30	15	M-C2E-C10	M-D8E-C10	M-F8E-C10	7269
20BD011	0	7.5	5	4	50 (11)	9.5	7.9	11	12.1	16.5	15	20	15	40	40	15	M-C2E-C16	M-D8E-C16	M-F8E-C16	7269
20BD014	1	10	7.5	4	50 (11)	12.5	10.4	14	16.5	22	17.5	30	17.5	50	50	20	M-C2E-C16	M-D8E-C16	M-F8E-C16	7269
20BD022	1	15	10	4	50 (11)	19.9	16.6	22	24.2	33	25	50	25	80	80	30	–	M-D8E-C25	M-F8E-C25	7269
20BD027	2	20	15	4	50 (11)	24.8	20.6	27	33	44	35	60	35	100	100	50	–	–	M-F8E-C32	7269
20BD034	2	25	20	4	50 (11)	31.2	25.9	34	40.5	54	40	70	40	125	125	50	–	–	M-F8E-C45	7269
20BD040	3	30	25	4	50 (11)	36.7	30.5	40	51	68	50	90	50	150	150	50	–	–	M-F8E-C45	13630
20BD052	3	40	30	4	50 (11)	47.7	39.7	52	60	80	60	110	60	200	200	70	–	–	–	–
20BD065	3	50	40	4	50 (11)	59.6	49.6	65	78	104	80	125	80	250	250	100	–	–	–	–
20BD077 (12)	4	60	–	4	50 (11)	72.3	60.1	77	85	116	100	170	100	300	300	100	–	–	–	–
		–	50	4	50 (11)	59.6	49.6	65	98	130	80	125	80	250	250	100	–	–	–	–
20BD096 (12)	5	75	–	4	50 (9)	90.1	74.9	96	106	144	125	200	125	350	350	125	–	–	–	–
		–	60	4	50 (9)	72.3	60.1	77	116	154	100	170	100	300	300	100	–	–	–	–
20BD125 (12)	5	100	–	4	50 (9)	117	97.6	125	138	163	150	250	150	500	375	150	–	–	–	–
		–	75	4	50 (9)	90.1	74.9	96	144	168	125	200	125	350	350	125	–	–	–	–
20BD156 (12)	6	125	–	4	50 (9)	147	122	156	172	234	200	350	200	600	450	250	–	–	–	–
		–	100	4	50 (9)	131	109	125	188	250	175	250	175	500	375	250	–	–	–	–
20BD180 (12)	6	150	–	4	50 (9)	169	141	180	198	270	225	400	225	600	500	250	–	–	–	–
		–	125	4	50 (9)	147	122	156	234	312	200	350	200	600	450	250	–	–	–	–
20BD248 (12)	6	200	–	2	45 (9)	233	194	248	273	372	300	550	300	700	700	400	–	–	–	–
		–	150	2	50 (9)	169 (17)	141	180	270	360	225	400	225	600	500	250	–	–	–	–

See page 29 for notes.

480 Volt AC Input Protection Devices – Frames 7…10

Drive Catalog Number (12)	Frame	Hp Rating		PWM Freq.	Temp. (16)	Input Ratings		Output Amps			Dual Element Time Delay Fuse		Non-Time Delay Fuse		Circuit Breaker (3)	Motor Circuit Protector (4)
		ND	HD	kHz	°C	Amps	kVA	Cont.	1 Min.	3 Sec.	Min. (1)	Max. (2)	Min. (1)	Max. (2)	Max. (8)	Max. (8)
20BD292	7	250		4	40	281	233	292	322	438	375	650	375	850	850	400
			200	4	40	253	210	263	395	526	350	550	350	550	750	400
20BD325	7	250		4	40	313	260	325	358	488	425	700	425	950	950	600
			250	4	40	313	260	325	488	650	425	700	425	950	950	600
20BD365	8	300		2	40	351	292	365	402	548	475	800	475	1000	1000	600
			250	2	40	313	260	325	488	650	425	700	425	950	950	600
20BD415	8	350		2	40	399	331	415	457	623	525	900	525	1200	1200	600
			300	2	40	351	291	365	548	730	475	800	475	1000	1000	600
20BD481	8	400		2	40	462	384	481	530	722	600	1000	600	1400	1400	700
			350	2	40	399	331	415	623	830	525	900	525	1200	1200	600
20BD535	8	450		2	40	514	427	535	589	803	700	1200	700	1600	1600	700
			400	2	40	462	384	481	722	962	600	1000	600	1400	1400	700
20BD600	8	500		2	40	577	479	600	660	900	750	1300	750	1800	1800	800
			450	2	40	514	427	535	803	1070	700	1200	700	1600	1600	700
20BD730	9	600		2	40	673	559	730	803	1095	900	1500	900	2100	2100	900
			500	2	40	577	479	600	900	1200	750	1300	750	1800	1800	800
20BD875	10	700		2	40	841	699	875	963	1313	1100	1900	1100	2600	2600	1200
			600	2	40	673	559	700	1050	1400	900	1500	900	2100	2100	900

See page 29 for notes.

600 Volt AC Input Protection Devices – Frames 0…6 [13]

Drive Catalog Number	Frame	Hp Rating		PWM Freq.	Temp. [11]	Input Ratings		Output Amps			Dual Element Time Delay Fuse		Non-Time Delay Fuse		Circuit Breaker [3]	Motor Circuit Protector [4]	140M Motor Protector with Adjustable Current Range [5][6]			
		ND	HD	kHz	°C	Amps	kVA	Cont.	1 Min.	3 Sec.	Min. [1]	Max. [2]	Min. [1]	Max. [2]	Max. [8]	Max. [8]	Available Catalog Numbers - 140… [7]			Min. Enclosure Vol. (in.^{3}) [14]
20BE1P7	0	1	0.5	4	50	1.3	1.4	1.7	2	2.6	2	4	2	6	15	3	M-C2E-B16	–	–	7269
20BE2P7	0	2	1	4	50	2.1	2.1	2.7	3.6	4.8	3	6	3	10	15	3	M-C2E-B25	–	–	7269
20BE3P9	0	3	2	4	50	3	3.1	3.9	4.3	5.9	6	9	6	15	15	7	M-C2E-B40	M-D8E-B40	–	7269
20BE6P1	0	5	3	4	50	5.3	5.5	6.1	6.7	9.2	9	12	9	20	20	15	–	M-D8E-B63	–	7269
20BE9P0	0	7.5	5	4	50	7.8	8.1	9	9.9	13.5	10	20	10	35	30	15	–	M-D8E-C10	M-F8E-C10	7269
20BE011	1	10	7.5	4	50	9.9	10.2	11	13.5	18	15	25	15	40	40	15	–	M-D8E-C10	M-F8E-C10	7269
20BE017	1	15	10	4	50	15.4	16	17	18.7	25.5	20	40	20	60	50	20	–	M-D8E-C16	M-F8E-C16	7269
20BE022	2	20	15	4	50	20.2	21	22	25.5	34	30	50	30	80	80	30	–	–	M-F8E-C25	7269
20BE027	2	25	20	4	50	24.8	25.7	27	33	44	35	60	35	100	100	50	–	–	M-F8E-C25	7269
20BE032	3	30	25	4	50	29.4	30.5	32	40.5	54	40	70	40	125	125	50	–	–	M-F8E-C32	13630
20BE041	3	40	30	4	50	37.6	39.1	41	48	64	50	90	50	150	150	100	–	–	–	–
20BE052	3	50	40	4	50	47.7	49.6	52	61.5	82	60	110	60	200	200	100	–	–	–	–
20BE062	4	60	50	2	50	58.2	60.5	62	78	104	80	125	80	225	225	100	–	–	–	–
20BE077 [12]	5	75	–	2	50 [9]	72.3	75.1	77	85	116	90	150	90	300	300	100	–	–	–	–
		–	60	2	50 [9]	58.2	60.5	63	94	126	90	125	90	250	250	100	–	–	–	–
20BE099 [12]	5	100	–	2	40 [9]	92.9	96.6	99	109	126	125	200	125	375	375	150	–	–	–	–
		–	75	2	40 [9]	72.3	75.1	77	116	138	100	175	100	300	300	100	–	–	–	–
20BE125 [12]	6	125	–	2	50 [9]	117	122	125	138	188	150	250	150	375	375	250	–	–	–	–
		–	100	2	50 [9]	93	96.6	99	149	198	125	200	125	375	375	150	–	–	–	–
20BE144 [12]	6	150	–	2	50 [9]	135	141	144	158	216	175	300	175	400	400	250	–	–	–	–
		–	125	2	50 [9]	117	122	125	188	250	150	275	150	375	375	250	–	–	–	–

See page 29 for notes.

690 Volt AC Input Protection Devices – Frames 0…6 [13]

Drive Catalog Number [12]	Frame	kW Rating		PWM Freq.	Temp. [11]	Input Ratings		Output Amps			Dual Element Time Delay Fuse		Non-Time Delay Fuse		Circuit Breaker [3]	Motor Circuit Protector [4]
		ND	HD	kHz	°C	Amps	kVA	Cont.	1 Min.	3 Sec.	Min. [1]	Max. [2]	Min. [1]	Max. [2]	Max. [8]	Max. [8]
20BF052	5	45	–	4	50 [9]	46.9	56.1	52	57	78	60	110	60	175	175	–
		–	37.5	4	50 [9]	40.1	48	46	69	92	50	90	50	150	150	–
20BF060	5	55	–	4	50 [9]	57.7	68.9	60	66	90	80	125	80	225	225	–
		–	45	4	50 [9]	46.9	56.1	52	78	104	60	110	60	175	175	–
20BF082	5	75	–	2	50 [9]	79	94.4	82	90	123	100	200	100	375	375	–
		–	55	2	50 [9]	57.7	68.9	60	90	120	80	125	80	225	225	–
20BF098	5	90	–	2	40 [9]	94.7	113	98	108	127	125	200	125	375	375	–
		–	75	2	40 [9]	79	94.4	82	123	140	100	200	100	375	375	–
20BF119	6	110	–	2	50 [9]	115	137	119	131	179	150	250	150	400	–	–
		–	90	2	50 [9]	94.7	113	98	147	196	125	200	125	375	–	–
20BF142	6	132	–	2	50 [9]	138	165	142	156	213	175	300	175	450	–	–
		–	110	2	50 [9]	115	137	119	179	238	150	250	150	400	–	–

See page 29 for notes.

Notes

(1) Minimum protection device size is the lowest rated device that supplies maximum protection without nuisance tripping.

(2) Maximum protection device size is the highest rated device that supplies drive protection. For US NEC, minimum size is 125% of motor FLA. Ratings shown are maximum.

(3) Circuit Breaker - inverse time breaker. For US NEC, minimum size is 125% of motor FLA. Ratings shown are maximum.

(4) Motor Circuit Protector - instantaneous trip circuit breaker. For US NEC minimum size is 125% of motor FLA. Ratings shown are maximum.

(5) Bulletin 140M with adjustable current range must have the current trip set to the minimum range that the device will not trip.

(6) Manual Self-Protected (Type E) Combination Motor Controller, UL listed for 208 Wye or Delta, 240 Wye or Delta, 480Y/277 or 600Y/ 347. Not UL listed for use on 480V or 600V Delta/Delta, corner ground, or high-resistance ground systems.

(7) The AIC ratings of the Bulletin 140M Motor Protector Circuit Breakers can vary. See Bulletin 140M Motor Protection Circuit Breakers Application Ratings.

(8) Maximum allowable rating by US NEC. Exact size must be chosen for each installation.

(9) UL Type 12/IP54 (flange mount) heat sink ambient temperature rating is 40° C/ambient of unprotected drive portion (inside enclosure) is 55° C. The ambient temperature for the UL Type 12/IP54 stand-alone drives is 40° C.

(10) Must remove top label and vent plate, drive enclosure rating is IP00, NEMA / UL Type Open.

(11) Frames 0…4 temperature rating is for NEMA / UL Type Open. The adhesive top label must be removed to operate drive at this temperature. Frames 5 & 6 do not have a top label.

(12) Drives have dual current ratings; one for normal duty applications, and one for heavy duty applications. The drive can be operated at either rating.

(13) Note: 600V class drives below 77 Amps (Frames 0…4) are declared to meet the Low Voltage Directive. It is the responsibility of the user to determine compliance to the EMC directive.

(14) When using a Manual Self-Protected (Type E) Combination Motor Controller, the drive must be installed in a ventilated or non-ventilated enclosure with the minimum volume specified in this column. Application specific thermal considerations can require a larger enclosure.

(15) Frame 7…10 drives are CE Certified for use with 400V AC and 480V AC center grounded neutral power supply systems only. It is the responsibility of the user to determine compliance to the EMC directive.

(16) Temperature rating is for IP20, NEMA / UL Type 1. For IP00, NEMA Type Open the temperature rating is 65 °C for the control board and 40 °C for the heat sink entry air.

(17) Input current on the drive can be lower than the output current due to the power factor correction in the drive.

325 Volt DC Input Protection Devices – Frames 0…6

Drive Catalog Number	Frame	Hp Rating		PWM Freq.	Temp. (1)	DC Input Ratings	Output Amps			Fuse	Non-Time Delay Fuse (2)(11)
		ND	HD	kHz	°C	Amps	Cont.	1 Min.	3 Sec.		
20BB2P2	0	0.5	0.33	4	50	2	2.2	2.4	3.3	5	JKS-5
20BB4P2	0	1	0.75	4	50	3.8	4.2	4.8	6.4	10	JKS-10
20BB6P8	1	2	1.5	4	50	6.9	6.8	9	12	15	HSJ15
20BB9P6	1	3	2	4	50	9.7	9.6	10.6	14.4	20	HSJ20
20BB015	1	5	3	4	50	16	15.3	16.8	23	30	HSJ30
20BB022	1	7.5	5	4	50	23.3	22	24.2	33	45	HSJ45
20BB028	2	10	7.5	4	50	30	28	33	44	60	HSJ60
20BB042	3	15	10	4	50	45	42	46.2	63	90	HSJ90
20BB052	3	20	15	4	50	55	52	63	80	100	HSJ100
20BB070	4	25	20	4	50	75.3	70	78	105	150	HSJ150
20BB080	4	30	25	4	50	86.8	80	105	140	175	HSJ175
20BN104 (3)	5	40	–	4	50	114.1	104	115	175	200	HSJ200
		–	30	4	50	85.8	80	120	160	200	HSJ200
20BN130 (3)	5	50	–	4	50	142.6	130	143	175	200	HSJ200
		–	40	4	50	114.1	104	156	175	200	HSJ200
20BN154 (3)	6	60	–	4	50	169	154	169	231	300	HSJ300
		–	50	4	50	142.6	130	195	260	300	HSJ300
20BN192 (3)	6	75	–	4	50	210.6	192	211	288	350	HSJ350
		–	60	4	50	169	154	231	308	350	HSJ350
20BN260 (3)	6	100	–	2	45	285.3	260	286	390	400	HSJ400
		–	75	2	50	210.6	205	305	410	400	HSJ400

See page 32 for notes.

540 Volt DC Input Protection Devices – Frames 0…6

Drive Catalog Number	Frame	kW Rating		PWM Freq.	Temp.[1]	DC Input Ratings	Output Amps			Fuse	Non-Time Delay Fuse[2][11]
		ND	HD	kHz	°C	Amps	Cont.	1 Min.	3 Sec.		
20BC1P3	0	0.37	0.25	4	50	1.3	1.3	1.4	1.9	3	JKS-3
20BC2P1	0	0.75	0.55	4	50	2.1	2.1	2.4	3.2	6	JKS-6
20BC3P5	0	1.5	0.75	4	50	3.7	3.5	4.5	6	8	JKS-8
20BC5P0	0	2.2	1.5	4	50	5.3	5	5.5	7.5	10	JKS-10
20BC8P7	0	4	3	4	50	9.3	8.7	9.9	13.2	15	HSJ15
20BC011	0	5.5	4	4	50	12.6	11.5	13	17.4	20	HSJ20
20BC015	1	7.5	5.5	4	50	16.8	15.4	17.2	23.1	25	HSJ25
20BC022	1	11	7.5	4	50	24	22	24.2	33	40	HSJ40
20BC030	2	15	11	4	50	33.2	30	33	45	50	HSJ50
20BC037	2	18.5	15	4	50	40.9	37	45	60	70	HSJ70
20BC043	3	22	18.5	4	50	47.5	43	56	74	90	HSJ90
20BC056	3	30	22	4	50	61.9	56	64	86	100	HSJ100
20BC072	3	37	30	4	50[7]	80.5	72	84	112	125	HSJ125
20BC085[3][5]	4	45	–	4	45	95.1	85	94	128	150	HSJ150
		–	37	4	45	80.5	72	108	144	175	HSJ175
20BH105[3][5]	5	55	–	4	50[4]	120.2	105	116	158	175	HSJ175
		–	45	4	50[4]	95.1	85	128	170	200	HSJ200
20BH140[3][5]	5	75	–	4	40[4]	159	140	154	190	225	HSJ225
		–	55	4	40[4]	120.2	105	158	190	225	HSJ225
20BH170[3][5]	6	90	–	4	50[4]	192.3	170	187	255	300	HSJ300
		–	75	4	50[4]	159	140	210	280	300	HSJ300
20BH205[3][5]	6	110	–	4	40[4]	226	205	220	289	350	HSJ350
		–	90	4	40[4]	192.3	170	255	313	350	HSJ350
20BH260[3][5]	6	132	–	2	45[4]	298	260	286	390	500	HSJ500
		–	110	2	50[4]	226	205	305	410	500	HSJ500

See page 32 for notes.

540 Volt DC Input with Precharge – Frames 7…10

Drive Catalog Number	Frame	kW Rating		PWM Freq.	Temp.	DC Input Ratings		Output Amps			Fuse	Non-Time Delay Fuse[2][11]
		ND	HD	kHz	°C	Amps	kW	Cont.	1 Min.	3 Sec.		
20BP292	7	160		4	40	342	185	292	322	438	500	170M6608[10]
			150	4	40	309	166	263	395	526	630	170M6610[10]
20BP325	7	180		4	40	381	206	325	358	488	630	170M6610[10]
			180	4	40	381	206	325	488	650	800	170M6612[10]
20BP365	8	200		2	40	428	231	365	402	548	630	170M6610[10]
			180	2	40	381	206	325	488	650	800	170M6612[10]
20BP415	8	240		2	40	487	262	415	457	623	800	170M6612[10]
			200	2	40	428	231	365	548	730	900	170M6613[10]
20BP481	8	280		2	40	564	304	481	530	722	900	170M6613[10]
			240	2	40	487	262	415	623	830	1000	170M6614[10]
20BP535	8	300		2	40	627	338	535	589	803	1000	170M6614[10]
			280	2	40	564	304	481	722	962	1100	170M6615[10]
20BP600	8	350		2	40	703	379	600	660	900	1100[8]	170M6615[10]
			300	2	40	627	338	535	803	1070	1200[8]	170M6616[10]
20BP730	9	400		2	40	855	461	730	803	1095	1200[9]	170M6616[10]
			350	2	40	703	379	600	900	1200	1400[9]	170M6617[10]
20BH875 No Precharge	10	500		2	40	1025	553	875	963	1313	2 x 800	170M6612[10]
			400	2	40	820	443	700	1050	1400	2 x 800	170M6612[10]

See page 32 for notes.

650 Volt DC Input Protection Devices – Frames 0…6

Drive Catalog Number	Frame	Hp Rating		PWM Freq.	Temp.[1]	DC Input Ratings	Output Amps			Fuse	Non-Time Delay Fuse[2][11]
		ND	HD	kHz	°C	Amps	Cont.	1 Min.	3 Sec.		
20BD1P1	0	0.5	0.33	4	50	1.0	1.1	1.2	1.6	3	JKS-3
20BD2P1	0	1	0.75	4	50	1.9	2.1	2.4	3.2	6	JKS-6
20BD3P4	0	2	1.5	4	50	3.0	3.4	4.5	6.0	6	JKS-6
20BD5P0	0	3	2	4	50	4.5	5.0	5.5	7.5	10	JKS-10
20BD8P0	0	5	3	4	50	8.1	8.0	8.8	12	15	HSJ15
20BD011	0	7.5	5	4	50	11.1	11	12.1	16.5	20	HSJ20
20BD014	1	10	7.5	4	50	14.7	14	16.5	22	30	HSJ30
20BD022	1	15	10	4	50	23.3	22	24.2	33	40	HSJ40
20BD027	2	20	15	4	50	28.9	27	33	44	50	HSJ50
20BD034	2	25	20	4	50	36.4	34	40.5	54	60	HSJ60
20BD040	3	30	25	4	50	42.9	40	51	68	80	HSJ80
20BD052	3	40	30	4	50	55.7	52	60	80	90	HSJ90
20BD065	3	50	40	4	50	69.7	65	78	104	100	HSJ100
20BD077[3]	4	60	–	4	50	84.5	77	85	116	150	HSJ150
		–	50	4	50	69.7	65	98	130	150	HSJ150
20BR096[3][6]	5	75	–	4	50[4]	105.3	96	106	144	175	HSJ175
		–	60	4	50[4]	84.5	77	116	154	175	HSJ175
20BR125[3][6]	5	100	–	4	50[4]	137.1	125	138	163	200	HSJ200
		–	75	4	50[4]	105.3	96	144	168	200	HSJ200
20BR156[3][6]	6	125	–	4	50[4]	171.2	156	172	234	300	HSJ300
		–	100	4	50[4]	137.1	125	188	250	300	HSJ300
20BR180[3][6]	6	150	–	4	50[4]	204	180	198	270	400	HSJ400
		–	125	4	50[4]	171.2	156	234	312	400	HSJ400
20BR248[3][6]	6	200	–	2	45[4]	272	248	273	372	400	HSJ400
		–	150	2	50[4]	204	180	270	360	400	HSJ400

See page 32 for notes.

650 Volt DC Input with Precharge – Frames 7…10

Drive Catalog Number	Frame	Hp Rating		PWM Freq.	Temp.	DC Input Ratings		Output Amps			Fuse	Non-Time Delay Fuse[2][11]
		ND	HD	kHz	°C	Amps	kW	Cont.	1 Min.	3 Sec.		
20BR292	7	250		4	40	328	212	292	322	438	500	170M6608[10]
			200	4	40	296	191	263	395	526	630	170M6610[10]
20BR325	7	250		4	40	365	236	325	358	488	550	170M6609[10]
			250	4	40	365	236	325	488	650	800	170M6612[10]
20BR365	8	300		2	40	410	265	365	402	548	630	170M6610[10]
			250	2	40	365	236	325	488	650	800	170M6612[10]
20BR415	8	350		2	40	466	302	415	457	623	700	170M6611[10]
			300	2	40	410	265	365	548	730	800	170M6612[10]
20BR481	8	400		2	40	540	350	481	530	722	800	170M6619[10]
			350	2	40	466	302	415	623	830	900	170M6613[10]
20BR535	8	450		2	40	601	389	535	589	803	900	170M6613[10]
			400	2	40	540	350	481	722	962	1000	170M6614[10]
20BR600	8	500		2	40	674	436	600	660	900	1000[8]	170M6614[10]
			450	2	40	601	389	535	803	1070	1200[8]	170M6616[10]
20BR730	9	600		2	40	820	533	730	803	1095	1200[9]	170M6616[10]
			500	2	40	674	436	600	900	1200	1400[9]	170M6617[10]
20BJ875 No Precharge	10	700		2	40	983	636	875	963	1313	1400	2 x 170M6611[10]
			600	2	40	786	509	700	1050	1400	1600	2 x 170M6612[10]

See page 32 for notes.

810 Volt DC Input Protection Devices – Frames 0…6

Drive Catalog Number	Frame	Hp Rating		PWM Freq.	Temp.[1]	DC Input Ratings	Output Amps			Fuse	Non-Time Delay Fuse[2][11]
		ND	HD	kHz	°C	Amps	Cont.	1 Min.	3 Sec.		
20BE1P7	0	1	0.75	4	50	1.5	1.7	2	2.6	3	JKS-3
20BE2P7	0	2	1.5	4	50	2.4	2.7	3.6	4.8	6	JKS-6
20BE3P9	0	3	2	4	50	3.5	3.9	4.3	5.9	6	JKS-6
20BE6P1	0	5	3	4	50	6.2	6.1	6.7	9.2	10	JKS-10
20BE9P0	0	7.5	5	4	50	9.1	9	9.9	13.5	15	HSJ15
20BE011	0	10	7.5	4	50	11.5	11	13.5	18	20	HSJ20
20BE017	1	15	10	4	50	18	17	18.7	25.5	30	HSJ30
20BE022	2	20	15	4	50	23.6	22	25.5	34	40	HSJ40
20BE027	2	25	20	4	50	29	27	33	44	50	HSJ50
20BE032	3	30	25	4	50	34.3	32	40.5	54	60	HSJ60
20BE041	3	40	30	4	50	43.9	41	48	64	70	HSJ70
20BE052	3	50	40	4	50	55.7	52	61.5	82	90	HSJ90
20BE062	4	60	50	2	50	68	62	78	104	125	HSJ125
20BT099[3]	5	100	–	2	40	108.6	99	109	126	150	HSJ150
		–	75	2	40	84.5	77	116	138	150	HSJ150
20BT144[3]	6	150	–	2	50	158	144	158	216	250	HSJ250
		–	125	2	50	137.1	125	188	250	250	HSJ250

932 Volt DC Input Protection Devices – Frames 0…6

Drive Catalog Number	Frame	kW Rating		PWM Freq.	Temp.[1]	DC Input Ratings	Output Amps			Fuse	Non-Time Delay Fuse[2][11]
		ND	HD	kHz	°C	Amps	Cont.	1 Min.	3 Sec.		
20BW052[3]	5	45	–	2	50[4]	58.2	52	57	78	100	170M3691
		–	37.5	2	50[4]	46.9	46	69	92	100	170M3691
20BW098[3]	5	90	–	2	50[4]	110.7	98	108	127	160	170M3693
		–	75	2	50[4]	92.3	82	123	140	160	170M3693
20BW142[3]	6	132	–	2	50[4]	162.2	142	156	213	250	170M3695
		–	110	2	40[4]	134.9	119	179	238	315	170M3696

Notes

(1) Frames 0…4 temperature rating is for NEMA / UL Type Open. The adhesive top label must be removed to operate drive at this temperature. Frames 5 & 6 do not have a top label.

(2) The power source to common bus inverters must be derived from AC voltages 600V or less, as defined in NFPA70; Art 430-18 (NEC). Battery supplies or MG sets are not included. The following devices were validated to break current of the derived power DC Bus.
Disconnects: Allen-Bradley Bulletin 1494, 30-400A; 194, 30-400A; or ABB OESA, 600 & 800A; OESL, all sizes.
Fuses: Bussmann Type JKS, all sizes; Type 170M, Case Sizes 1, 2 and 3, or Ferraz Shawmut Type HSJ, all sizes. For any other devices, please contact the factory.

(3) Drives have dual current ratings; one for normal duty applications, and one for heavy duty applications. The drive can be operated at either rating.

(4) UL Type 12/IP54 (flange mount) heatsink ambient temperature rating is 40 °C/ambient of unprotected drive portion (inside enclosure) is 55 °C. The ambient temperature for the UL Type 12/IP54 stand-alone drives is 40 °C.

(5) Also applies to "P" voltage class.

(6) Also applies to "J" voltage class.

(7) Must remove top label and vent plate, drive enclosure rating is IP00, NEMA / UL Type Open.

(8) Two 630A Bussmann 170M6608 can also be used.

(9) Two 700A Bussmann 170M6611 can also be used.

(10) Bussmann or equivalent.

(11) See Fuse Certification and Test Data in PowerFlex AC Drives in Common Bus Configurations Application Guidelines, publication DRIVES-AT002, for fuse self-certification and test data for Bussmann 170M and JKS fuses recommended for the DC bus fusing.

Cable Recommendations

Power Cable Types Acceptable for 200…600 Volt Installations

A variety of cable types are acceptable for drive installations. For many installations, unshielded cable is adequate, provided it can be separated from sensitive circuits. As an approximate guide, allow a spacing of 0.3 meters (1 foot) for every 10 meters (32.8 feet) of length. In all cases, long parallel runs must be avoided. Do not use cable with an insulation thickness less than or equal to 15 mils (0.4mm/0.015 in.). Use Copper wire only. Wire gauge requirements and recommendations are based on 75° C. Do not reduce wire gauge when using higher temperature wire. See table below.

Location	Rating/Type	Description
Standard (Option 1)	600V, 90° C (194° F) XHHW2/RHW-2 Anixter B209500-B209507, Belden 29501-29507, or equivalent	• Four tinned copper conductors with XLP insulation. • Copper braid/aluminum foil combination shield and tinned copper drain wire. • PVC jacket.
Standard (Option 2)	Tray rated 600V, 90° C (194° F) RHH/RHW-2 Anixter OLF-7xxxxx or equivalent	• Three tinned copper conductors with XLPE insulation. • 5 mil single helical copper tape (25% overlap min.) with three bare copper grounds in contact with shield. • PVC jacket.
Class I & II; Division I & II	Tray rated 600V, 90° C (194° F) RHH/RHW-2 Anixter 7V-7xxxx-3G or equivalent	• Three bare copper conductors with XLPE insulation and impervious corrugated continuously welded aluminum armor. • Black sunlight resistant PVC jacket overall. • Three copper grounds on #10 AWG and smaller.

Unshielded

THHN, THWN or similar wire is acceptable for drive installation in dry environments provided adequate free air space and/or conduit fill rates limits are provided. **Do not use THHN or similarly coated wire in wet areas**. Any wire chosen must have a minimum insulation thickness of 15 Mils and should not have large variations in insulation concentricity.

Shielded/Armored Cable

Shielded cable contains all of the general benefits of multi-conductor cable with the added benefit of a copper braided shield that can contain much of the noise generated by a typical AC drive. Strong consideration for shielded cable should be given in installations with sensitive equipment such as weigh scales, capacitive proximity switches and other devices that may be affected by electrical noise in the distribution system. Applications with large numbers of drives in a similar location, imposed EMC regulations or a high degree of communications/ networking are also good candidates for shielded cable.

Shielded cable may also help reduce shaft voltage and induced bearing currents for some applications. In addition, the increased impedance of shielded cable may help extend the distance that the motor can be located from the drive without the addition of motor protective devices such as terminator networks.

Consideration should be given to all of the general specifications dictated by the environment of the installation, including temperature, flexibility, moisture characteristics and chemical resistance. In addition, a braided shield should be included and be specified by the cable manufacturer as having coverage of at least 75%. An additional foil shield can greatly improve noise containment.

A good example of recommended cable is Belden® 295xx (xx determines gauge). This cable has four (4) XLPE insulated conductors with a 100% coverage foil and an 85% coverage copper braided shield (with drain wire) surrounded by a PVC jacket.

Other types of shielded cable are available, but the selection of these types may limit the allowable cable length. Particularly, some of the newer cables twist 4 conductors of THHN wire and wrap them tightly with a foil shield. This construction can greatly increase the cable charging current required and reduce the overall drive performance. Unless specified in the individual distance tables as tested with the drive, these cables are not recommended and their performance against the lead length limits supplied is not known.

Maximum Motor Cable Lengths

For information on maximum motor cable lengths, refer to the Wiring and Grounding Guidelines for Pulse Width Modulated (PWM) AC Drives, publication DRIVES-IN001.

Power Wiring

The PowerFlex 700 has the following built in protective features to help simplify installation:

- Ground fault protection during start up and running ensures reliable operation
- Electronic motor overload protection increases motor life
- Removable MOV to ground and common mode capacitors to ground ensure compatibility with ungrounded systems. These devices must be disconnected if the drive is installed on a resistive grounded distribution system, an ungrounded distribution system, a B phase grounded distribution system or impedance grounded system. These devices must also be disconnected if the drive power source is a regenerative unit (such as a bus supply and brake) or is DC fed from an active converter.
- 6 kV transient protection provides increased robustness for 380...480V system voltages

There are many other factors that must be considered for optimal performance in any given application. The block diagram below highlights the primary installation considerations. Consult the Wiring and Grounding Guidelines for Pulse Width Modulated (PWM) AC Drives, publication DRIVES-IN001 for detailed recommendations on input power conditioning, dynamic braking, reflected wave protection and motor cable types.

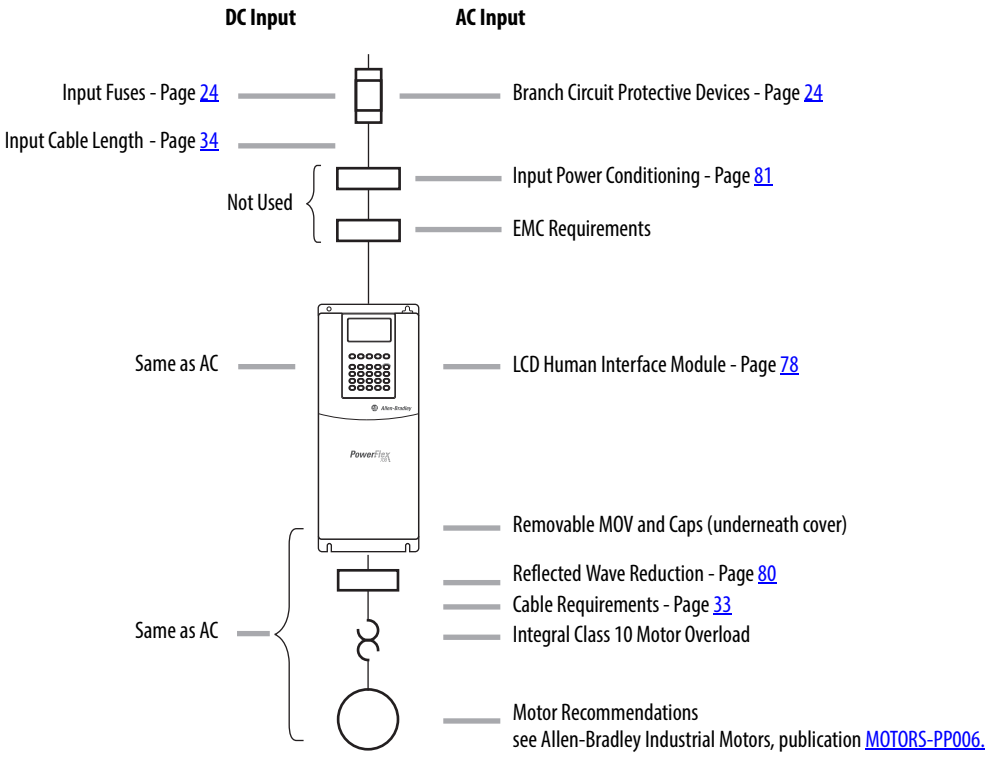

Terminal Blocks

Terminal Block Specifications

Refer to pages 36...38 for typical locations.

No.	Name	Frame	Description	Wire Size Range - See Note (3)		Torque	
				Maximum	Minimum	Maximum	Recommended
❶	Power Terminal Block	0 & 1	Input power and motor connections	4.0 mm^2 (12 AWG)	0.5 mm^2 (22 AWG)	1.7 N•m (15 lb.•in.)	0.8 N•m (7 lb.•in.)
		2	Input power and motor connections	10.0 mm^2 (8 AWG)	0.8 mm^2 (18 AWG)	1.7 N•m (15 lb.•in.)	1.4 N•m (12 lb.•in.)
		3	Input power and motor connections	25.0 mm^2 (3 AWG)	2.5 mm^2 (14 AWG)	3.6 N•m (32 lb.•in.)	1.8 N•m (16 lb.•in.)
			BR1, 2 terminals	10.0 mm^2 (8 AWG)	0.8 mm^2 (18 AWG)	1.7 N•m (15 lb.•in.)	1.4 N•m (12 lb.•in.)
		4	Input power and motor connections	35.0 mm^2 (3 AWG)	10.0 mm^2 (14 AWG)	4.0 N•m (35 lb.•in.)	4.0 N•m (35 lb.•in.)
		5 75 Hp, 480V 100 Hp, 600V	Input power, DC+, DC–, BR1, 2, PE, motor connections	50.0 mm^2 (1 AWG)	4.0 mm^2 (8 AWG)	See Note (5)	
		5 100 Hp	Input power, DC+, DC– and motor	70.0 mm^2 (2/0 AWG)	10.0 mm^2 (8 AWG)		
			BR1, 2, PE terminals	50.0 mm^2 (1/0 AWG)	4.0 mm^2 (12 AWG)		
		6	Input power, DC+, DC–, BR1, 2, PE, motor connections	150.0 mm^2 (300 MCM) *see Note* (4)	2.5 mm^2 (14 AWG)	6.0 N•m (52 lb.•in.)	6.0 N•m (52 lb.•in.)
		7	Input power, DC+, DC–, PE, motor connections	150.0 mm^2 (300 MCM) *see Note* (4)	2.5 mm^2 (14 AWG)	2.7 N•m (24 lb.•in.)	2.7 N•m (24 lb.•in.)
		8 & 9	Input power, DC+, DC–, PE, motor connections	300.0 mm^2 (600 MCM) *see Note* (4)	2.5 mm^2 (14 AWG)	10.0 N•m (87 lb.•in.)	10.0 N•m (87 lb.•in.)
		10	Input power, DC+, DC–, PE, motor connections	300.0 mm^2 (600 MCM) *see Note* (4)	2.5 mm^2 (14 AWG)	10.0 N•m (87 lb.•in.)	10.0 N•m (87 lb.•in.)
❷	SHLD Terminal	0…6	Terminating point for wiring shields	—	—	1.6 N•m (14 lb.•in.)	1.6 N•m (14 lb.•in.)
❸	AUX Terminal Block	0…4	Auxiliary control voltage PS+, PS– (1)(2)	1.5 mm^2 (16 AWG)	0.2 mm^2 (24 AWG)	—	—
		5…6		4.0 mm^2 (12 AWG)	0.5 mm^2 (22 AWG)	0.6 N•m (5.3 lb.•in.)	0.6 N•m (5.3 lb.•in.)
		7…10		4.0 mm^2 (12 AWG)	0.049 mm^2 (30 AWG)	0.6 N•m (5.3 lb.•in.)	0.6 N•m (5.3 lb.•in.)
❹	I/O Terminal Block	0…6	Signal & control connections	2.5 mm^2 (14 AWG)	0.30 mm^2 (22 AWG)	0.6 N•m (5.3 lb.•in.)	0.6 N•m (5.3 lb.•in.)
		7…10		4.0 mm^2 (12 AWG)	0.049 mm^2 (30 AWG)	0.6 N•m (5.3 lb.•in.)	0.6 N•m (5.3 lb.•in.)
❺	Encoder Terminal Block	0…10	Encoder power & signal connections	0.75 mm^2 (18 AWG)	0.196 mm^2 (24 AWG)	0.6 N•m (5.3 lb.•in.)	0.6 N•m (5.3 lb.•in.)
❻	Fan Terminal Block	5…6	User supplied fan voltage	4.0 mm^2 (12 AWG)	0.5 mm^2 (22 AWG)	0.6 N•m (5.3 lb.•in.)	0.6 N•m (5.3 lb.•in.)
		7		4.0 mm^2 (12 AWG)	0.5 mm^2 (22 AWG)	0.9 N•m (8.0 lb.•in.)	0.6 N•m (5.3 lb.•in.)
		8…10		4.0 mm^2 (12 AWG)	0.5 mm^2 (22 AWG)	0.6 N•m (5.3 lb.•in.)	0.6 N•m (5.3 lb.•in.)

(1) External control power: UL Installation-300V DC, ±10%, Non UL Installation-270…600V DC, ±10% (0…3 Frame-40W, 165 mA, 5 Frame-80W, 90 mA).

(2) An Auxiliary Control Power Supply such as the 20-24V-AUX can be used with 400/480 and 600/690 Volt drives with Vector Control. However, consult the factory before using an auxiliary power supply in these instances. **Important:** The Auxiliary Control Power Supply Must Not be used with any Standard Control drive or any 200/240V PowerFlex 700 drive, Standard or Vector Control.

(3) **Maximum/minimum sizes that the terminal block will accept -** these are not recommendations**.**

(4) If may be necessary to connect multiple wires in parallel to these terminals using multiple lugs.

(5) Refer to the terminal block label inside the drive.

Typical Terminal Block Location

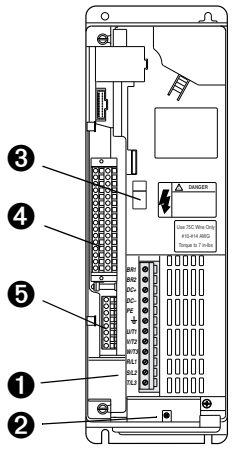

Frames 0…1

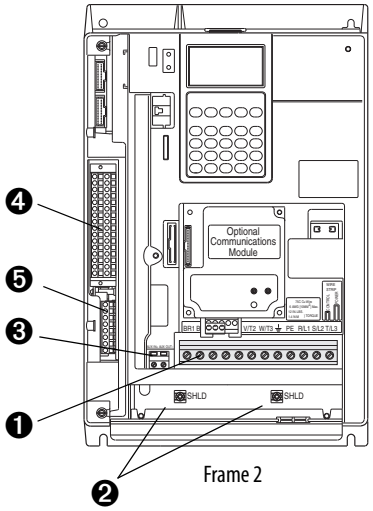

Frame 2

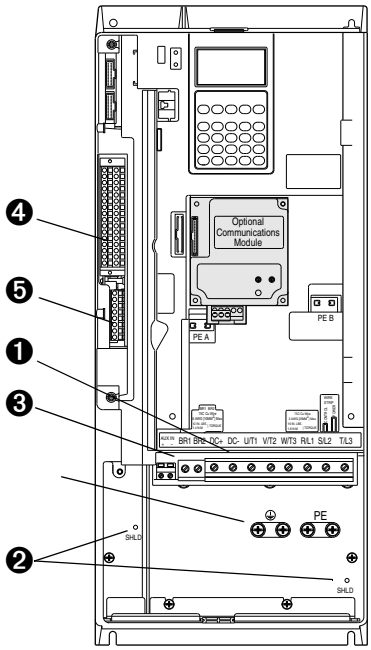

Frames 3…4

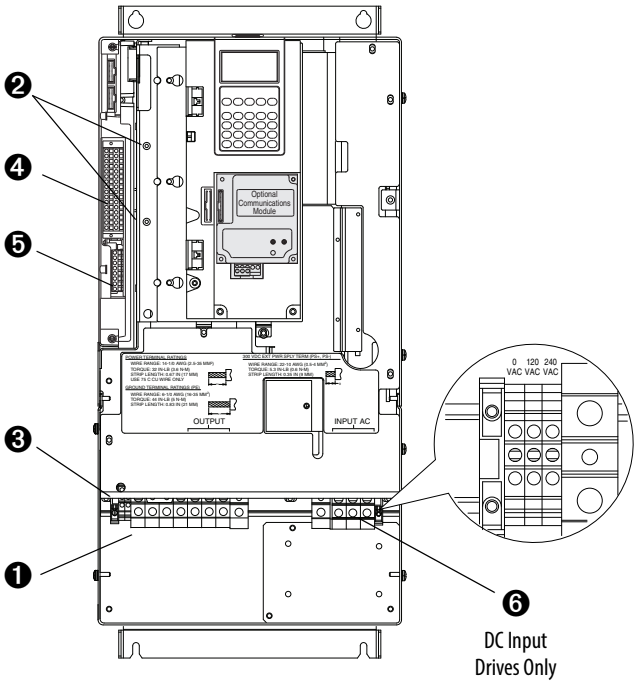

Frame 5

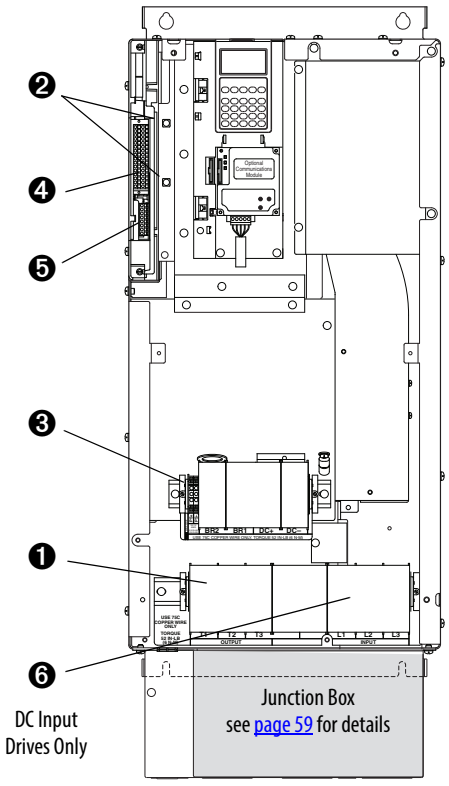

Frame 6

⏚ / PE

Typical Terminal Block Locations (continued)

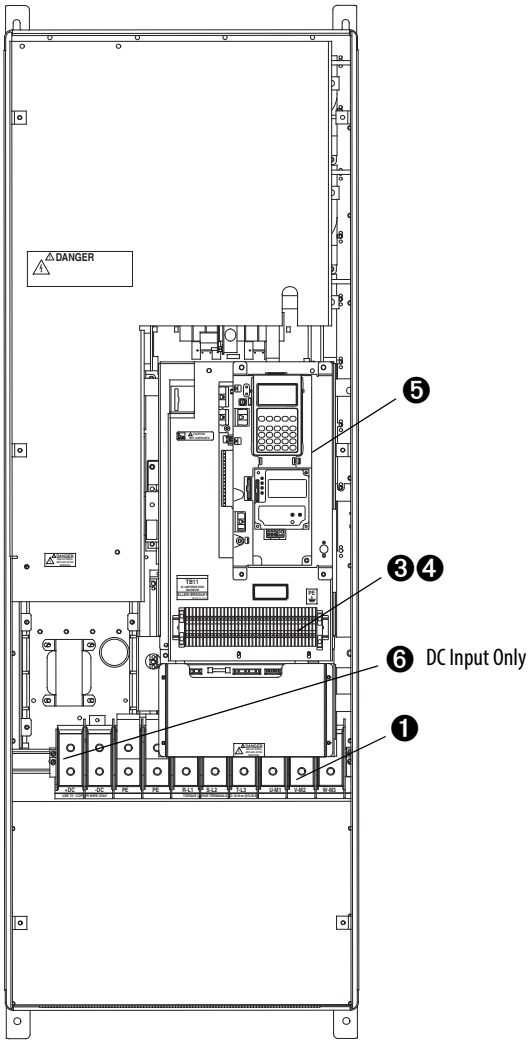

Frame 7

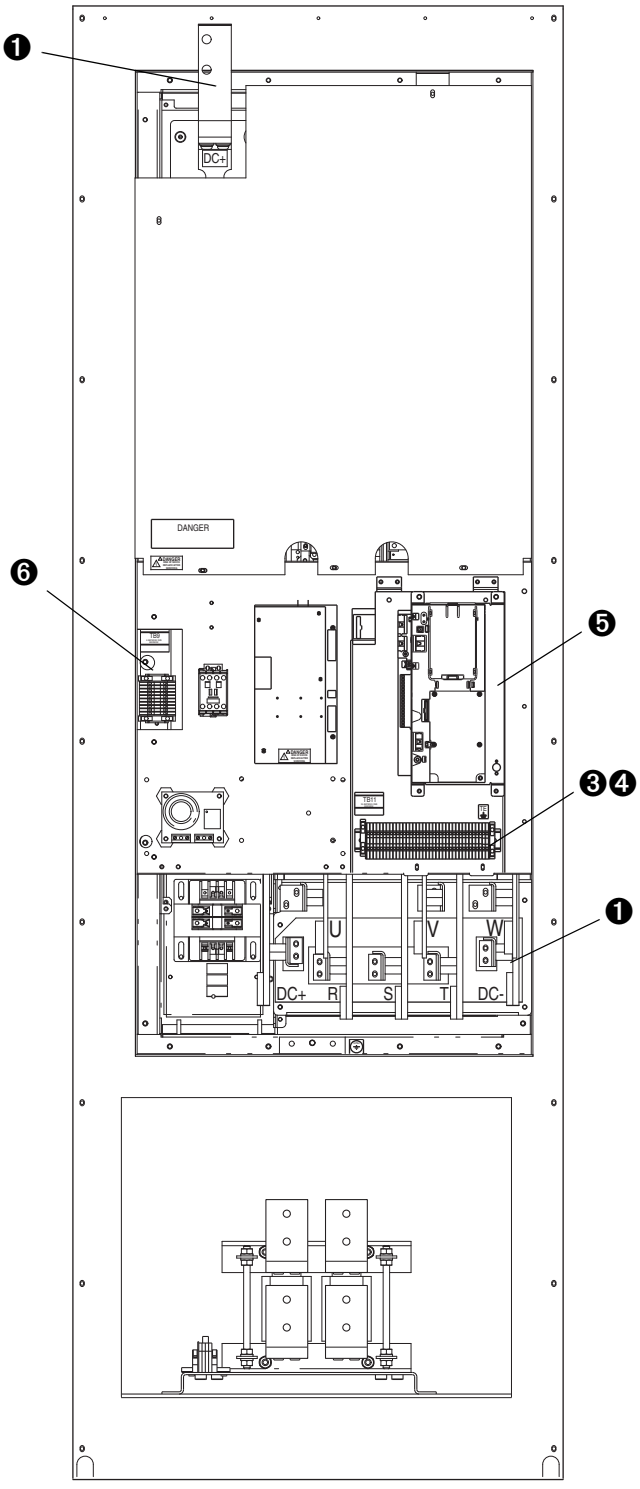

Frames 8…9

Typical Terminal Block Locations (continued)

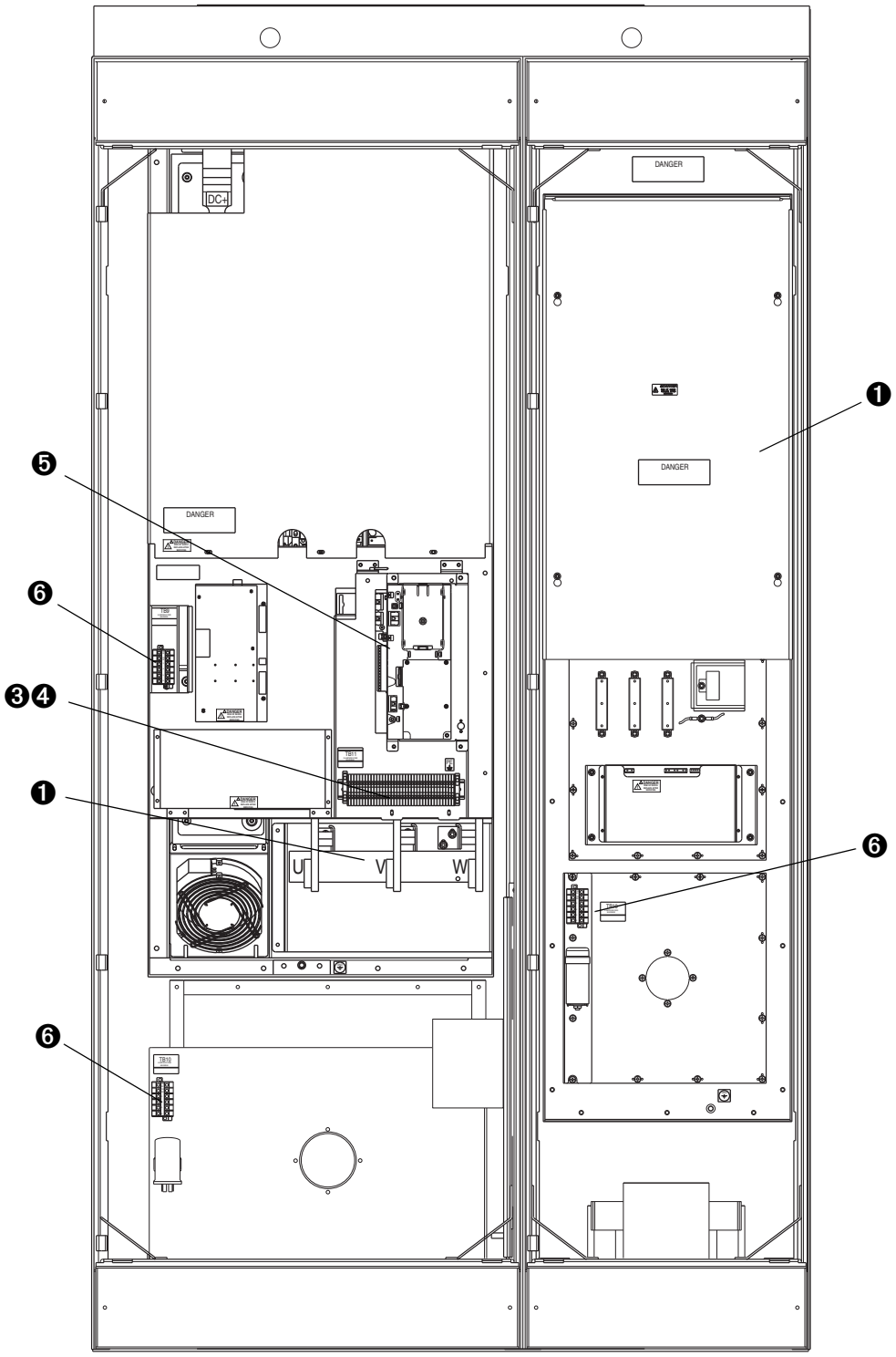

Frame 10
AC Input shown, DC Input Drives utilize the Inverter (Left) Bay only

Power Terminals

<table>
<tr><th>Frame</th><th>Terminal Block</th><th></th></tr>
<tr><td>0…1</td><td> 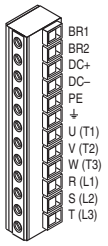
</td><td rowspan="3">* Note:
Shaded BR1 & BR2 Terminals will only be present on drives ordered with the Brake Option.</td></tr>
<tr><td>2</td><td> 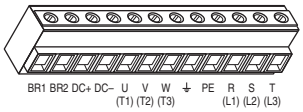
</td></tr>
<tr><td>3…4</td><td> 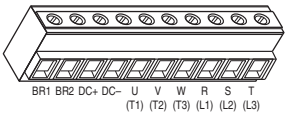
</td></tr>
<tr><td></td><td>AC Input</td><td>DC Input</td></tr>
<tr><td>5</td><td>75 Hp, Normal Duty
 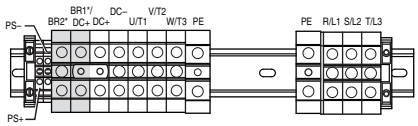
</td><td>75 Hp, Normal Duty
 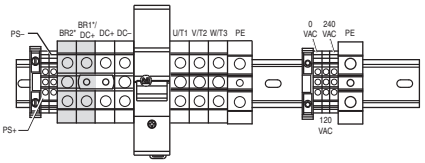
</td></tr>
<tr><td></td><td>100 Hp, Normal Duty
 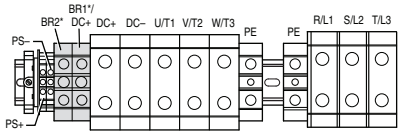
</td><td>100 Hp, Normal Duty
 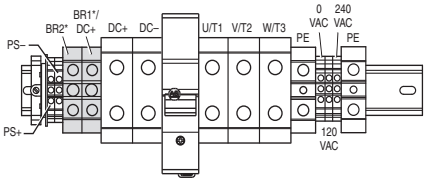
</td></tr>
<tr><td>6</td><td>125…200 Hp, Normal Duty
 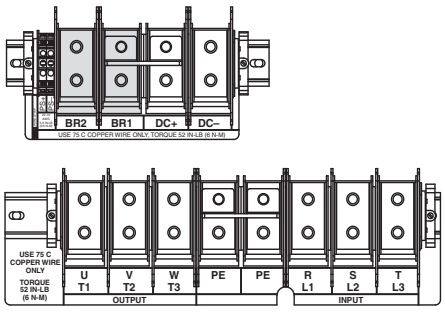
</td><td>125…200 Hp, Normal Duty
 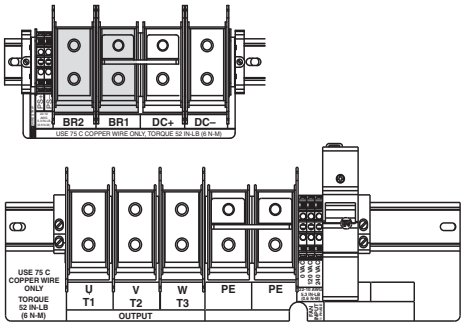
</td></tr>
</table>

Frame	Terminal Block	
	AC Input	**DC Input**
7	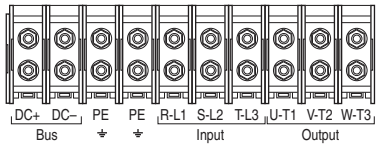	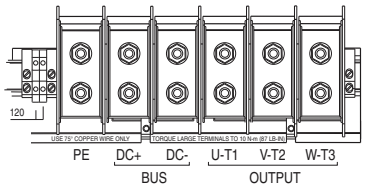
8…9	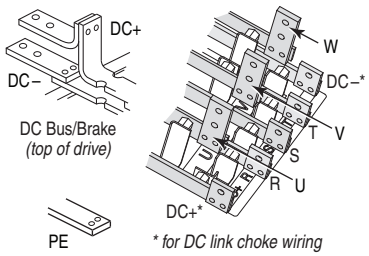	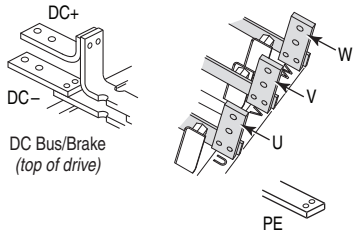
10	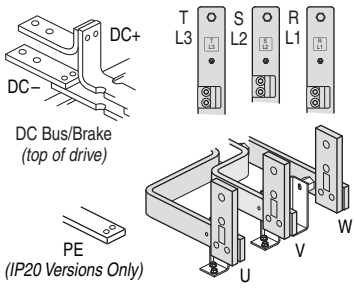	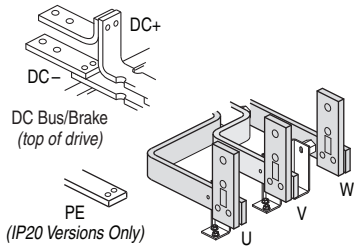

Fan Circuit Power Supply

Some drives utilize a fan transformer to power the internal fan(s). This transformer is sized specifically for the internal fan(s) and must not be used to power other circuitry. If your line voltage is different than the voltage class specified on the drive nameplate, changing the transformer taps will be required.

Frames 5…6 Fan Connections

Drive Type	Enclosure	**Rating** (120V AC)	No. of Fans	Connect at …
DC Input	IP00, NEMA / UL Type Open	100 VA (Frame 5) 138 VA (Frame 6)	1	Power Terminal Block Requires user supplied 120 or 240V AC. See page 36 for TB locations and terminal designations.
	IP20, NEMA / UL Type 1 IP54, NEMA / UL Type 12	100 VA (Frame 5) 138 VA (Frame 6)	1	
AC Input	IP00, NEMA / UL Type Open	100 VA (Frame 5) 138 VA (Frame 6)	1	N/A (Connected internally) A transformer matches the input line voltage to the internal fan voltage. If line voltage is different than the voltage class specified on the drive nameplate, the transformer taps may require changing. The transformer is behind the Power Terminal Block. Access is gained by releasing the terminal block from the rail and removing the transformer cover plate. 1. Locate the small metal tab at the bottom of the end terminal block. 2. Press the tab-in and pull the top of the block out. Repeat for the next block if desired. 3. Remove the transformer cover plate. 4. Select the appropriate transformer tap. 5. Replace cover and terminal block.
	IP20, NEMA / UL Type 1 IP54, NEMA / UL Type 12	100 VA (Frame 5) 138 VA (Frame 6)	1	
	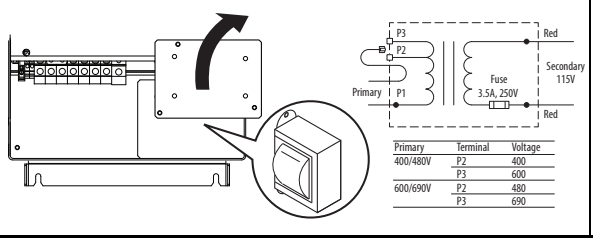			

Frame 7

Drive Type	Enclosure	Rating *(120VAC)*	No. of Fans	Connect at . . .
DC Input	IP00, NEMA / UL Type Open	250 VA	1	Power Terminal Block Requires user supplied 120V AC. See page 40 for location.
	IP20, NEMA / UL Type 1	250 VA	1	
AC Input	IP00, NEMA / UL Type Open	250 VA	1	N/A (Connected internally)
	IP20, NEMA / UL Type 1	250 VA	1	

Frame 8

Drive Type	Enclosure	Rating (120VAC)	No. of Fans	Connect at . . .
DC Input	IP00, NEMA / UL Type Open	500 VA	1	TB9 Requires user supplied 120V AC. See page 37 for TB location and page 42 for terminal designations.
	IP20, NEMA / UL Type 1	500 VA	1	
AC Input	IP00, NEMA / UL Type Open	500 VA	1	TB9 A transformer matches the input line voltage to the internal fan voltage. If line voltage is different than the voltage class specified on the drive nameplate, the transformer taps may require changing. 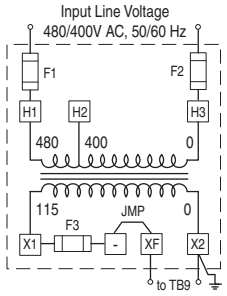
	IP20, NEMA / UL Type 1	500 VA	1	

Frame 9

Drive Type	Enclosure	Rating (120VAC)	No. of Fans	Connect at . . .
DC Input	IP00, NEMA / UL Type Open	500 VA	2	**TB9** Requires user supplied 120V AC for cap. bank fan and phase monitor. **Blower Terminal Block** Three-phase power must be supplied to the Blower TB. See page 37 for TB locations and page 42 for terminal designations.
	IP20, NEMA / UL Type 1	500 VA	2	
AC Input	IP00, NEMA / UL Type Open	500 VA	2	**TB9** A transformer matches the input line voltage to the internal voltage used for the capacitor fan and phase detector module. If the line voltage is different than the voltage class specified on the drive nameplate, the transformer taps may require changing. 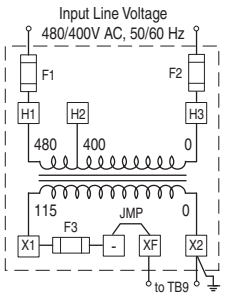
	IP20, NEMA / UL Type 1	500 VA	2	

Frame 9 Blower Operation

Frame 9 drives use a single-phase capacitor bank fan and a three-phase blower for cooling. Proper phasing must be supplied to terminals R, S, and T of the Power Terminal Block (AC drives) or the Blower Terminal Block (DC drives) to assure correct blower rotation. To verify this, a Phase Monitor is used.

Frame 10

Drive Type	Enclosure	Rating *(120VAC)*	No. of Fans	Connect at . . .
DC Input	IP00, NEMA / UL Type Open	1000 VA	2	TB9 & 10 Requires user supplied 120V AC. See page 38 for TB locations and page 42 for terminal designations.
	IP20, NEMA / UL Type 1	1000 VA	2	
AC Input	IP00, NEMA / UL Type Open	1000 VA	3	TB9, 10 & 12 Requires user supplied 120V AC. See page 38 for TB locations and page 42 for terminal designations.
	IP20, NEMA / UL Type 1	1000 VA	3	TB9, 10 & 12 A transformer matches the input line voltage to the internal fan voltage. If line voltage is different than the voltage class specified on the drive nameplate, the transformer taps may require changing. 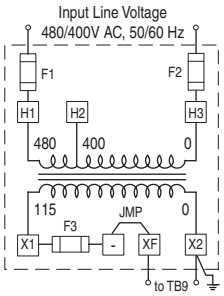

Fan/Blower Terminal Blocks - Frames 8…10

TB9, TB10

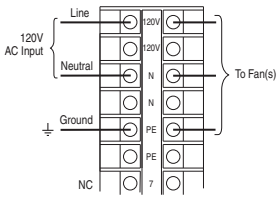

Frames 8…10

Blower TB

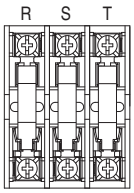

Frame 9 Only

TB12

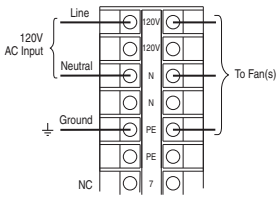

Frame 10, AC Input, IP20 Only

Fan Transformer Specifications/Fusing

Frame	Rating	Recommended Fuses	
		Primary (Quantity 2)	Secondary (Quantity 1)
8…9	500 VA	2.8A, 600V AC, KLDR/ATQR Type	6.25A, 250V AC, Time Delay
10	1000 VA	6A, 600V AC, KLDR/ATQR Type	9A, 250V AC, Time Delay

Three-Phase Blower Fusing

Frame	Recommended Fuses (Quantity 3)
9	5A, 600V AC, Time Delay

Additional Frame 10 Wiring Requirement for IP00 AC Input Drives

The Inverter and Converter sections of Frame 10 AC Input IP00, NEMA / UL Type Open drives are shipped separately. Once installed, the following connections are required.

1. DC Link Choke Wiring
   DC link chokes are supplied loose for customer mounting and wiring in IP00 drives. Refer to DC Link Chokes – Frames 8...10 below.
2. Thermistor Wiring
   Thermistor wiring is coiled loose in the Converter section for shipping. Locate the wire (labeled "To INV") and route through the enclosure wall. Connect it to the mating connector above the HIM cradle.
3. Ground the drive chassis.

DC Link Chokes – Frames 8…10

DC Link Chokes are supplied with Frame 8...10 AC input drives.

Frame	Type	DC Link Choke is supplied …
8…9	IP00, NEMA / UL Type Open	Mounted and wired
	IP20, NEMA / UL Type 1	Mounted and wired
	IP00, NEMA / UL Type Open Roll-In	Loose without cables
10	IP00, NEMA / UL Type Open	Loose without cables
	IP20, NEMA / UL Type 1	Mounted and wired

I/O Wiring

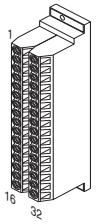

Standard Control Option – Frames 0…6 (1)

No.	Signal	Factory Default	Description
1	Anlg Volts In 1 (–)	(3)	Isolated (4), bipolar, differential, ±10V, 11 bit & sign, 88k ohm input impedance.
2	Anlg Volts In 1 (+)		
3	Anlg Volts In 2 (–)	(3)	Isolated (5), bipolar, differential, ±10V, 11 bit & sign, 88k ohm input impedance.
4	Anlg Volts In 2 (+)		
5	Pot Common	–	For (+) and (–) 10V pot references.
6	Anlg Volts Out 1 (–)	(3)	Bipolar, ±10V, 11 bit & sign, 2k ohm minimum load.
7	Anlg Volts Out 1 (+)		
8	Anlg Current Out 1 (–)	(3)	4-20mA, 11 bit & sign, 400 ohm maximum load.
9	Anlg Current Out 1 (+)		
10	Reserved for Future Use		
11	Digital Out 1 – N.C. (2)	Fault	Max. Resistive Load: 240V AC/30V DC – 1200VA, 150W Max. Current: 5A, Min. Load: 10mA Max. Inductive Load: 240V AC/30V DC – 840VA, 105W Max. Current: 3.5A, Min. Load: 10mA
12	Digital Out 1 Common		
13	Digital Out 1 – N.O. (2)	NOT Fault	
14	Digital Out 2 – N.C. (2)	NOT Run	
15	Digital Out 2 Common		
16	Digital Out 2 – N.O. (2)	Run	
17	Anlg Current In 1 (–)	(3)	Isolated (4), 4-20 mA, 11 bit & sign, 124 ohm input impedance.
18	Anlg Current In 1 (+)		
19	Anlg Current In 2 (–)	(3)	Isolated (5), 4-20 mA, 11 bit & sign, 124 ohm input impedance.
20	Anlg Current In 2 (+)		
21	–10V DC Pot Ref.	–	2k ohm minimum.
22	+10V DC Pot Ref.	–	
23	Reserved for Future Use		
24	+24V DC (6)	–	Drive supplied logic input power. (6)
25	Digital In Common	–	
26	24V Common (6)	–	Common for internal power supply.
27	Digital In 1	Stop - CF	115V AC, 50/60 Hz - Control & I/O Cat. No. option B Opto isolated Low State: less than 30V AC High State: greater than 100V AC, 5.0 mA 24V AC/DC, 50/60 Hz - Control & I/O Cat. No. option A Opto isolated Low State: less than 5V AC/DC High State: greater than 20V AC/DC, 11.2 mA DC Digital Input Impedance: 35k ohm
28	Digital In 2	Start	
29	Digital In 3	Auto/Man.	
30	Digital In 4	Speed Sel 1	
31	Digital In 5	Speed Sel 2	
32	Digital In 6	Speed Sel 3	

Vector Control Option – Frames 0…6 (1)

Signal	Factory Default	Description
Analog In 1 (–) (7)	(3)	Isolated (9), bipolar, differential, ±10V/0-20 mA, 11 bit & sign. For 0-20 mA, a jumper must be installed at terminals 17 & 18 (or 19 & 20). 88k ohm input impedance when configured for volt. & 95.3 ohm for current
Analog In 1 (+) (7)		
Analog In 2 (–) (7)		
Analog In 2 (+) (7)		
Pot Common	–	For (+) and (–) 10V pot references.
Analog Out 1 (–)	(3)	Single-ended bipolar (current output is not bipolar), ±10V/0-20 mA, 11 bit & sign, Voltage mode - limit current to 5 mA. Current mode - max. load is 400 ohms.
Analog Out 1 (+)		
Analog Out 2 (–)		
Analog Out 2 (+)		
HW PTC Input 1	–	1.8k ohm PTC, Internal 3.32k ohm pull-up resistor
Digital Out 1 – N.C. (2)	Fault	Max. Resistive Load: 240V AC/30V DC – 1200VA, 150W Max. Current: 5A, Min. Load: 10 mA Max. Inductive Load: 240V AC/30V DC – 840VA, 105W Max. Current: 3.5A, Min. Load: 10 mA
Digital Out 1 Common		
Digital Out 1 – N.O. (2)	NOT Fault	
Digital Out 2 – N.C. (2)	NOT Run	
Digital Out 2/3 Com.		
Digital Out 3 – N.O. (2)	Run	
Current In Jumper (7) – Analog In 1		Placing a jumper across terminals 17 & 18 (or 19 & 20) configures that analog input for current.
Current In Jumper (7) – Analog In 2		
–10V DC Pot Ref.	–	2k ohm minimum load.
+10V DC Pot Ref.	–	
HW PTC Input 2	–	See above
+24V DC (6)	–	Drive supplied logic input power. (6)
Digital In Common	–	
24V Common (6)	–	Common for internal power supply.
Digital In 1 (8)	Stop - CF	115V AC, 50/60 Hz - Control & I/O Cat. No. option D Opto isolated Low State: less than 30V AC High State: greater than 100V AC, 5.7 mA 24V DC - Control & I/O Cat. No. option C Opto isolated Low State: less than 5V DC High State: greater than 20V DC, 10 mA DC Digital Input Impedance: 21k ohm
Digital In 2 (8)	Start	
Digital In 3 (8)	Auto/Man.	
Digital In 4 (8)	Speed Sel 1	
Digital In 5 (8)	Speed Sel 2	
Digital In 6/Hardware Enable (8), see pg. 46	Speed Sel 3	

(1) Refer to the catalog number position "k" to determine your control option (A or B = standard control option, C or D = vector control option).

(2) Contacts in unpowered state. Any relay programmed as Fault or Alarm energizes (picks up) when power is applied to drive and deenergize (drop out) when a fault or alarm exists. Relays selected for other functions energize only when that condition exists and deenergizes when condition is removed.

(3) These inputs/outputs are dependant on a number of parameters.

(4) Differential Isolation - External source must be maintained at less than 160V with respect to PE. Input provides high common mode immunity.

(5) Differential Isolation - External source must be less than 10V with respect to PE.

(6) 150 mA maximum load designed to power digital inputs only. Not present on 115V versions.

(7) **Important:** 0…20 mA operation requires a jumper at terminals 17 & 18 (or 19 & 20). Drive damage can occur if jumper is not installed.

(8) A 10k ohm, 2 watt burden resistor must be installed on each digital input when using a triac type device. The resistor is installed between each digital input and neutral /common.

(9) Differential Isolation - External source must be maintained at less than 160V with respect to PE. Input provides high common mode immunity.

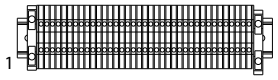

Vector Control Option – Frames 7…10

No.	Signal	Factory Default	Description
1	Analog In 1 (–) (1)	(3)	Isolated (4), bipolar, differential, ±10V/4-20mA, 11 bit & sign, 88k ohm input impedance. For 4-20mA, a jumper must be installed at terminals 17 & 18 (or 19 & 20).
2	Analog In 1 (+) (1)		
3	Analog In 2 (–) (1)		
4	Analog In 2 (+) (1)		
5	Pot Common	–	For (+) and (–) 10V pot references.
6	Analog Out 1 (–)	(3)	Bipolar (current output is not bipolar), ±10V/4-20mA, 11 bit & sign, voltage mode - limit current to 5 mA. Current mode - max. load resistance is 400 ohms.
7	Analog Out 1 (+)		
8	Analog Out 2 (–)		
9	Analog Out 2 (+)		
10	HW PTC Input 1	–	1.8k ohm PTC, Internal 3.32k ohm pull-up resistor
11	Digital Out 1 – N.C. (2)	Fault	Max. Resistive Load: 240V AC/30V DC – 1200VA, 150W Max. Current: 5A, Min. Load: 10mA Max. Inductive Load: 240V AC/30V DC – 840VA, 105W Max. Current: 3.5A, Min. Load: 10mA
12	Digital Out 1 Common		
13	Digital Out 1 – N.O. (2)	NOT Fault	
14	Digital Out 2 – N.C. (2)	NOT Run	
15	Digital Out 2/3 Com.		
16	Digital Out 3 – N.O. (2)	Run	
17	Current In Jumper (1) – Analog In 1		Placing a jumper across terminals 17 & 18 (or 19 & 20) configures that analog input for current.
18			
19	Current In Jumper (1) – Analog In 2		
20			
21	–10V Pot Reference	–	2k ohm minimum load.
22	+10V Pot Reference	–	
23	HW PTC Input 2	–	See above
24	+24V DC (5)	–	Drive supplied logic input power. (5)
25	Digital In Common	–	
26	24V Common (5)	–	Common for internal power supply.
27	Digital In 1	Stop - CF	115V AC, 50/60 Hz - Control & I/O Cat. No. option D Opto isolated Low State: less than 30V AC High State: greater than 100V AC 24V DC - Control & I/O Cat. No. option C Opto isolated Low State: less than 5V DC High State: greater than 20V DC 11.2 mA DC
28	Digital In 2	Start	
29	Digital In 3	Auto/Man.	
30	Digital In 4	Speed Sel 1	
31	Digital In 5	Speed Sel 2	
32	Digital In 6/Hardware Enable, see pg. 46	Speed Sel 3	
33	Digital Out 4 – N.C.	Fault	Dedicated fault output - Not user configurable. Relay energizes (picks up) when power is applied to the drive and deenergizes (drops out) when a fault exists. See Terminals 11-16 for specs.
34	Digital Out 4 Common		
35	Digital Out 4 – N.O.	NOT Fault	
PS+	Aux. Control Power (+)		
PS-	Aux. Control Power (–)		
PE	PE Ground		PE Ground
PE	PE Ground		PE Ground

(1) **Important:** 0…20mA operation requires a jumper at terminals 17 & 18 (or 19 & 20). Drive damage can occur if jumper is not installed.

(2) Contacts in unpowered state. Any relay programmed as Fault or Alarm energizes (picks up) when power is applied to the drive and deenergizes (drops out) when a fault or alarm exists. Relays selected for other functions energize only when that condition exists and deenergize when condition is removed.

(3) These inputs/outputs are dependant on a number of parameters.

(4) Differential Isolation - External source must be maintained at less than 160V with respect to PE. Input provides high common mode immunity.

(5) 150mA maximum Load. Not present on 115V versions.

Hardware Enable Circuitry (Vector Control Only)

By default, the user can program a digital input as an Enable input. The status of this input is interpreted by drive software. If the application requires the drive to be disabled without software interpretation, a "dedicated" hardware enable configuration can be utilized. This is done by removing a jumper and wiring the enable input to "Digital In 6."

Encoder Interface Option (Vector Control Only)

Encoder Terminal Designations

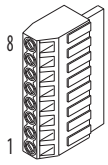

No.	Description (refer to specifications on page 11)	
8	+12V (1) DC Power	Internal power source 250 mA.
7	+12V (1) DC Return (Common)	
6	Encoder Z (NOT)	Pulse, marker or registration input. (2)
5	Encoder Z	
4	Encoder B (NOT)	Quadrature B input.
3	Encoder B	
2	Encoder A (NOT)	Single channel or quadrature A input.
1	Encoder A	

(1) Jumper selectable +5/12V is available on 20B-ENC-1 Encoder Boards.

(2) Z channel can be used as a pulse input while A & B are used for encoder.

Sample Encoder Wiring

I/O	Connection Example
Encoder Power –Internal Drive Power Internal (drive) 12V DC, 250mA (1)	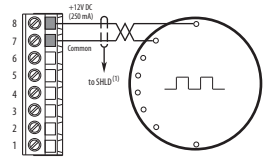
Encoder Signal –Single-Ended, Dual Channel (2)	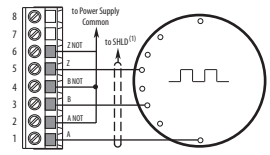

I/O	Connection Example
Encoder Power –External Power Source	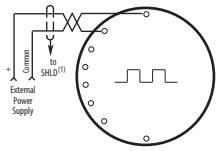
Encoder Signal –Differential, Dual Channel	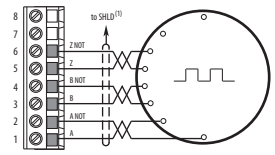

(1) SHLD connection is on drive chassis (see page 36).

(2) Example applies to 20B-ENC-1 only.

I/O Wiring Examples – Standard & Vector Control Options

Input/Output	Connection Example	Required Parameter Changes
Potentiometer Unipolar Speed Reference (1) 10k Ohm Pot. Recommended (2k Ohm Minimum)	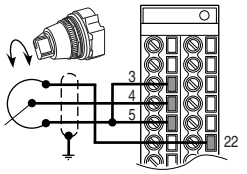	• Adjust Scaling: Parameters 91/92 and 325/326 • View Results: Parameter 002
Joystick Bipolar Speed Reference (1) ±10V Input	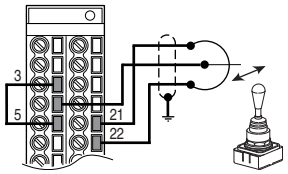	• Set Direction Mode: Parameter 190 = "1, Bipolar" • Adjust Scaling: Parameters 91/92 and 325/326 • View Results: Parameter 002
Analog Input Bipolar Speed Reference ±10V Input	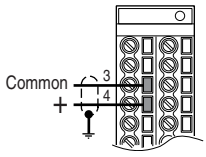	• Set Direction Mode: Parameter 190 = "1, Bipolar" • Adjust Scaling: Parameters 91/92 and 325/326 • View Results: Parameter 002
Analog Voltage Input Unipolar Speed Reference 0 to +10V Input	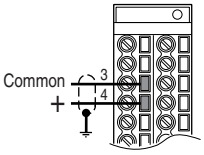	• Configure Input with parameter 320 • Adjust Scaling: Parameters 91/92 and 325/326 • View results: Parameter 002
Analog Current Input Unipolar Speed Reference **Standard** 4-20 mA Input	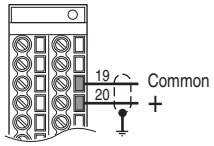	• Configure Input for Current: Parameter 320, Bit 1 = "1, Current" • Adjust Scaling: Parameters 91/92 and 325/326 • View Results: Parameter 002
Analog Current Input Unipolar Speed Reference **Vector** 0-20 mA Input	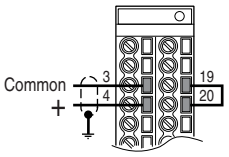	• Configure Input for Current: Parameter 320 and add jumper at appropriate terminals • Adjust Scaling: Parameters 91/92 and 325/326 • View results: Parameter 002
Analog Input, PTC **Vector** PTC OT set > 5V PTC OT cleared < 4V PTC Short < 0.2V	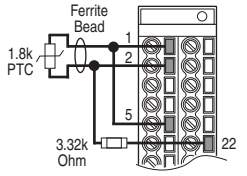	• Set Fault Config 1: Parameter 238, bit 7 = "Enabled" • Set Alarm Config 1: Parameter 259, bit 11 = "Enabled" • View Drive Alarm 1: Parameter 211, bit 11 = "True"
HW PTC Input Series B Only PTC OT set > 5V PTC OT cleared < 4V PTC Short < 0.2V	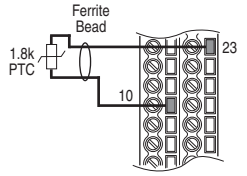	• Set Fault Config 1: Parameter 238, bit 13 = "Enabled" • Set Alarm Config 1: Parameter 259, bit 18 = "Enabled" • View Status: Drive Alarm 1: Parameter 211, bit 18 = "True"

(1) Refer to the PowerFlex 700 User Manual for important bipolar wiring information.

Input/Output	Connection Example	Required Parameter Changes
Analog Output ±10V, 0-20 mA Bipolar +10V Unipolar *(shown)* Standard Control 4-20 mA Unipolar *(use term. 8 & 9)*	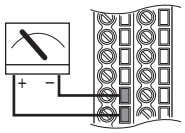	• Configure with Parameter 340 • Select Source Value: Parameter 384, [Digital Out1 Sel] • Adjust Scaling: Parameters 343/344
2-Wire Control Non-Reversing(1) 24V DC internal supply	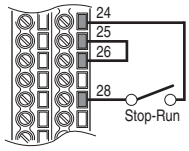	• Disable Digital Input:#1: Parameter 361 = "0, Unused" • Set Digital Input #2: Parameter 362 = "7, Run" • Set Direction Mode: Parameter 190 = "0, Unipolar"
2-Wire Control Reversing(1) External supply (I/O Board dependent)	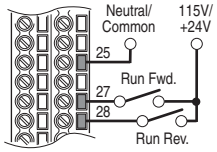	• Set Digital Input:#1: Parameter 361 = "8, Run Forward" • Set Digital Input #2: Parameter 362 = "9, Run Reverse"
3-Wire Control Internal supply	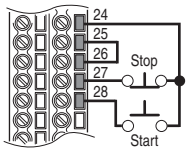	• No Changes Required
3-Wire Control External supply (I/O Board dependent). Requires 3-wire functions only ([Digital In1 Sel]). Using 2-wire selections will cause a type 2 alarm.	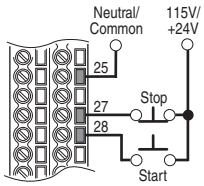	• No Changes Required •
Digital Input PLC Output Card (Board dependent).	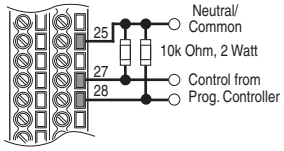	• No Changes Required •
Digital Output Relays shown in powered state with drive faulted. See page 44. Standard Control 1 relay at terminals 14-16. Vector Control 2 relays at terminals 14-16.	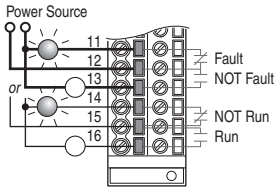	• Select Source to Activate: Parameters 380/384
Enable Input	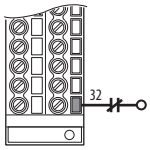	• Standard Control Configure with parameter 366 • Vector Control Configure with parameter 366 For dedicated hardware Enable: Remove Jumper J10 (see page 46)

(1) **Important:** Programming inputs for 2 wire control deactivates all HIM Start buttons.

Mounting

Frame/Rating Cross Reference

AC Input

	208/240		400V		480V		600V		690V	
Frame	**ND Hp**	**HD Hp**	**ND kW**	**HD kW**	**ND Hp**	**HD Hp**	**ND Hp**	**HD Hp**	**ND kW**	**HD kW**
0	0.5	0.33	0.37	0.25	0.5	0.33	1	0.5	–	–
	1	0.75	0.75	0.55	1	0.75	2	1	–	–
	–	–	1.5	0.75	2	1.5	3	2	–	–
	–	–	2.2	1.5	3	2	5	3	–	–
	–	–	4	2.2	5	3	7.5	5	–	–
	–	–	5.5	4	7.5	5	–	–	–	–
1	2	1.5	7.5	5.5	10	7.5	10	7.5	–	–
	3	2	11	7.5	15	10	15	10	–	–
	5	3	–	–	–	–	–	–	–	–
	7.5	5	–	–	–	–	–	–	–	–
2	10	7.5	15	11	20	15	20	15	–	–
	–	–	18.5	15	25	20	25	20	–	–
3	15	10	22	18.5	30	25	30	25	–	–
	20	15	30	22	40	30	40	30	–	–
	–	–	37	30	50	40	50	40	–	–
4	25	20	45	37	60	50	60	50	–	–
	30	25	–	–	–	–	–	–	–	–
5	40	30	55	45	75	60	75	60	45	37.5
	50	40	75	55	100	75	100	75	55	45
	–	–	–	–	–	–	–	–	75	55
	–	–	–	–	–	–	–	–	90	75
6	60	50	90	75	125	100	125	100	110	90
	75	60	110	90	150	125	150	125	132	110
	100	75	132	110	200	150	–	–	–	–
7	–	–	160	150	250	200	–	–	–	–
	–	–	180	180	250	250	–	–	–	–
8	–	–	200	180	300	250	–	–	–	–
	–	–	240	200	350	300	–	–	–	–
	–	–	280	240	400	350	–	–	–	–
	–	–	300	280	450	400	–	–	–	–
	–	–	350	300	500	450	–	–	–	–
9	–	–	400	350	600	500	–	–	–	–
10	–	–	500	400	700	600	–	–	–	–

DC Input

	325V		540V		650V		810V		932V	
Frame	**ND Hp**	**HD Hp**	**ND kW**	**HD kW**	**ND Hp**	**HD Hp**	**ND Hp**	**HD Hp**	**ND kW**	**HD kW**
0	0.5	0.33	–	–	0.5	0.33	1	0.75	–	–
	1	0.75	–	–	1	0.75	2	1.5	–	–
	–	–	–	–	2	1.5	3	2	–	–
	–	–	–	–	3	2	5	3	–	–
	–	–	–	–	5	3	7.5	5	–	–
	–	–	–	–	7.5	5	10	7.5	–	–
1	2	1.5	0.37	0.25	10	7.5	15	10	–	–
	3	2	0.75	0.55	15	10	–	–	–	–
	5	3	1.5	0.75	–	–	–	–	–	–
	7.5	5	2.2	1.5	–	–	–	–	–	–
	–	–	4	2.2	–	–	–	–	–	–
	–	–	5.5	4	–	–	–	–	–	–
	–	–	7.5	5.5	–	–	–	–	–	–
	–	–	11	7.5	–	–	–	–	–	–
2	10	7.5	15	11	20	15	20	15	–	–
	–	–	18.5	15	25	20	25	20	–	–
3	15	10	22	18.5	30	25	30	25	–	–
	20	15	30	22	40	30	40	30	–	–
	–	–	37	30	50	40	50	40	–	–
4	25	20	45	37	60	50	60	50	–	–
	30	25	–	–	–	–	–	–	–	–
5	40	30	55	45	75	60	100	75	45	37.5
	50	40	–	–	100	75	–	–	90	75
6	60	50	75	55	125	100	150	125	132	110
	75	60	90	75	150	125	–	–	–	–
	100	75	110	90	–	–	–	–	–	–
	–	–	132	110	200	150	–	–	–	–
7	–	–	160	150	250	200	–	–	–	–
	–	–	180	180	250	250	–	–	–	–
8	–	–	200	180	300	250	–	–	–	–
	–	–	240	200	350	300	–	–	–	–
	–	–	280	240	400	350	–	–	–	–
	–	–	300	280	450	400	–	–	–	–
	–	–	350	300	500	450	–	–	–	–
9	–	–	400	350	600	500	–	–	–	–
10	–	–	500	400	700	600	–	–	–	–

Operating Temperatures

PowerFlex 700 drives are designed to operate at 0°to 40° C ambient. To operate the drive in installations between 41° and 50° C, see the information below and refer to pages 25...32 for exceptions.

Acceptable Surrounding Air Temperature & Required Actions

Enclosure Rating	Temperature Range	Drive
IP20, NEMA / UL Type 1 (with Top Label) (1)	0…40 °C (0…104 °F)	Frames 0…4, All Ratings
	0…50 °C (0…122 °F)	Frames 5…6, Most Ratings (2)
IP20, NEMA / UL Type Open (Top Label Removed) (1)	0…50 °C (0…122 °F)	Frames 0…6, Most Ratings (2)
	0…45 °C (0…113 °F)	20BC072 Only
IP00, NEMA / UL Type Open (Top Label & Vent Plate Removed)	0…50 °C (0…122 °F)	20BC072 Only (3)
Flange Mount Front: IP00, NEMA / UL Type Open Back/Heat Sink: IP54, NEMA / UL Type 12	0…55 °C (0…131 °F) Front (Inside Encl.) 0…40 °C (0…104 °F) Back (External)	Frames 5…6
Stand-alone/Wall Mount IP54, NEMA / UL Type 12	0…40 °C (0…104 °F)	Frames 5…6
IP20, NEMA / UL Type 1	0…40 °C (0…104 °F)	Frames 7…10
IP00, NEMA / UL Type Open/Flange Mount Front: IP00, NEMA / UL Type Open Back/Heat Sink: IP54, NEMA12	0…65 °C (0…149 °F) Control Board 0…40 °C (0…104 °F) Heat Sink Entry Air	Frames 7…10
Roll In Front: IP00, NEMA / UL Type Open Back/Heat Sink: IP54, NEMA12	0…65 °C (0…149 °F) Control Board 0…40 °C (0…104 °F) Heat Sink Entry Air	Frames 8…9

(1) Removing the adhesive top label from the drive changes the NEMA / UL enclosure rating from Type 1 to Open. Frames 5 and 6 do not have a top label.

(2) Refer to pages 25…32 for exceptions.

(3) To remove vent plate (see page 53 for location), lift top edge of plate from the chassis. Rotate the plate out from the back plate.

Minimum Mounting Clearances

Frames 0…6

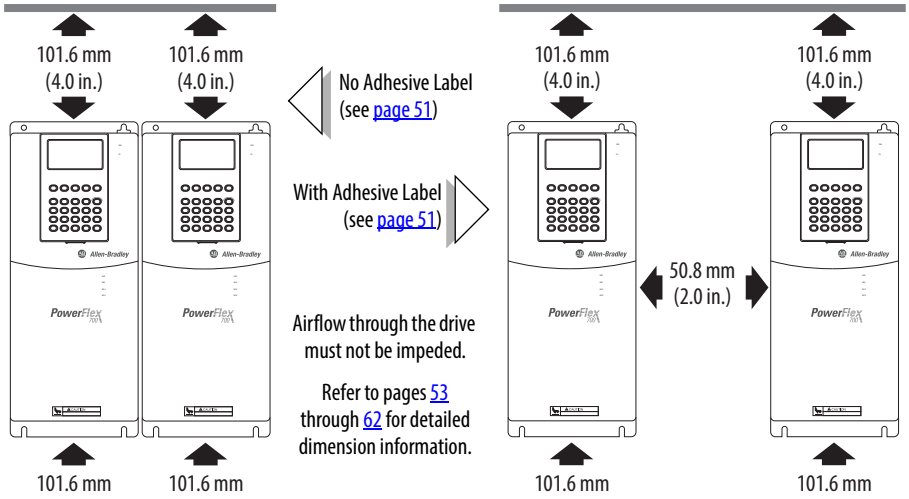

Specified vertical clearance requirements (indicated above) are intended to be from the drive to the closest object that can restrict airflow through the drive heat sink and chassis. The drive must be mounted in a vertical orientation as shown and must make full contact with the mounting surface. Do not use standoffs or spacers. In addition, inlet air temperature must not exceed the product specification.

Frames 7…10

The drive must be mounted with sufficient space at the top, sides, and front of the cabinet to allow for proper heat dissipation.

Frame	Recommendations
7	Minimum of 152 mm (6.0 in.) at the top and bottom of the enclosure and 102 mm (4.0 in.) on the sides. Flange Mount - Minimum of 152 mm (6.0 in.) at the back of the enclosure (flange mount surface to wall).
8…10	Minimum of 152 mm (6.0 in.) at the top of the enclosure. Additionally, allow a minimum of 102 mm (4.0 in.) on each side OR 152 mm (6.0 in.) in the back. Flange Mount - Minimum of 102 mm (4.0 in.) on each side.

Dimensions and Weights

Frames 0…3 – IP20, NEMA / UL Type 1

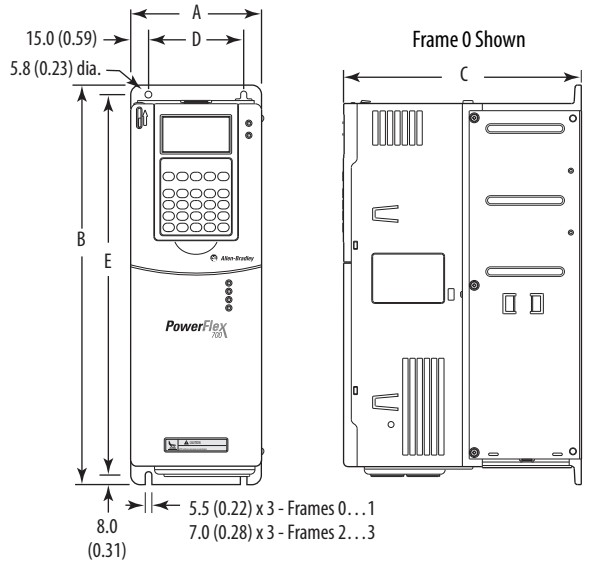

Frame	A	B	C	D	E	Weight (1) kg (lbs.)	
						Drive	Drive & Packaging
0	110.0 (4.33)	336.0 (13.23)	200.0 (7.87)	80.0 (3.15)	320.0 (12.60)	5.22 (11.5)	8.16 (18)
1	135.0 (5.31)	336.0 (13.23)	200.0 (7.87)	105.0 (4.13)	320.0 (12.60)	7.03 (15.5)	9.98 (22)
2	222.0 (8.74)	342.5 (13.48)	200.0 (7.87)	192.0 (7.56)	320.0 (12.60)	12.52 (27.6)	15.20 (33.5)
3	222.0 (8.74)	517.5 (20.37)	200.0 (7.87)	192.0 (7.56)	495.0 (19.49)	18.55 (40.9)	22.68 (50)

(1) Weights include HIM and Standard I/O.

Dimensions are in millimeters and (inches)

.

Frame 0

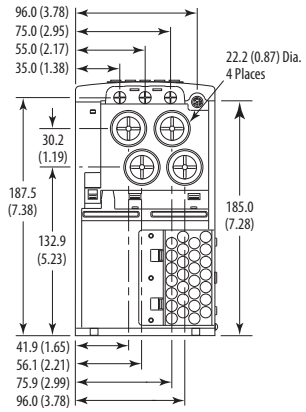

Frame 1

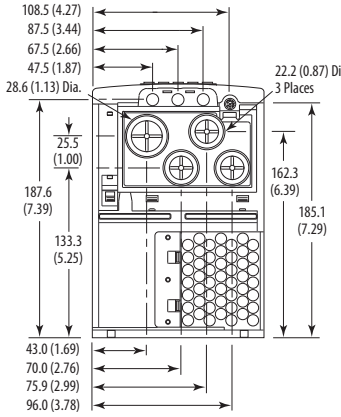

Frame 2

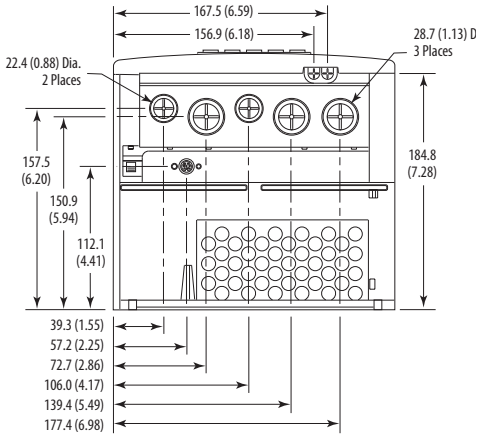

Frame 3
All *except* 50 Hp, 480V (37 kW, 400V)

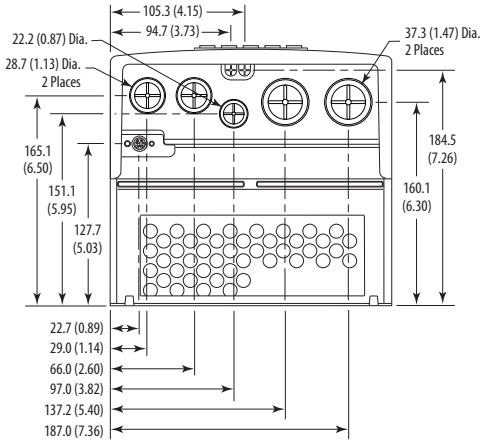

Frame 3
50 Hp, 480V (37 kW, 400V) Normal Duty Drive

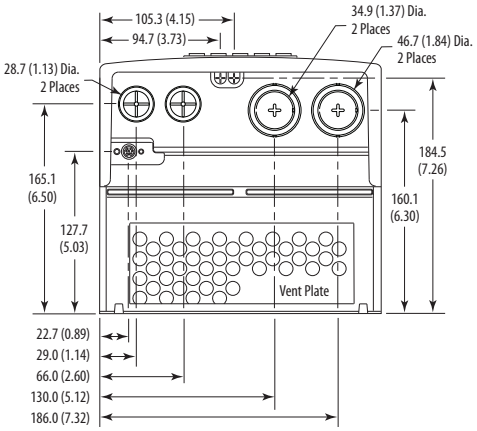

Frame 4 – IP20, NEMA / UL Type 1

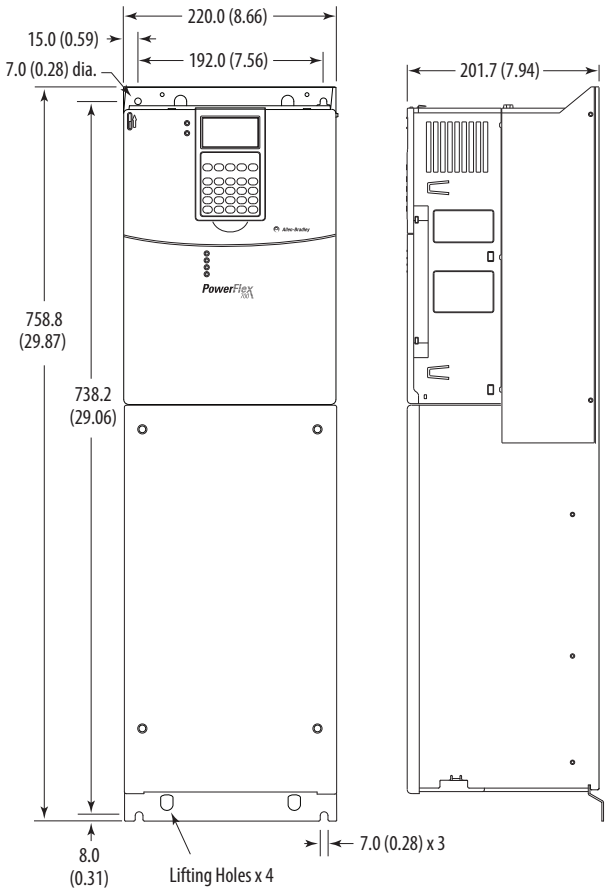

Dimensions are in millimeters and (inches)

Frame	Approx. Weight (1) kg (lbs.)	
	Drive	Drive & Packaging
4	24.49 (54.0)	29.03 (64.0)

(1) Weights include HIM and Standard I/O.

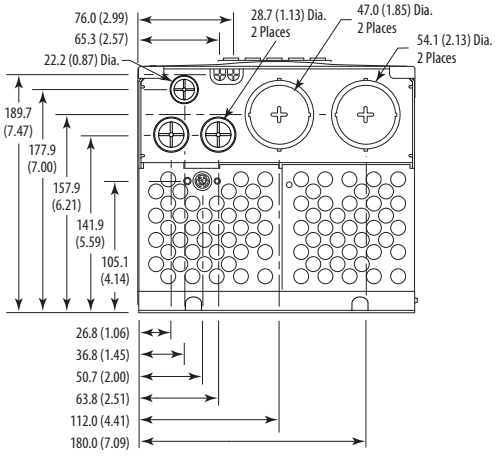

Frame 5 – IP20, NEMA / UL Type 1

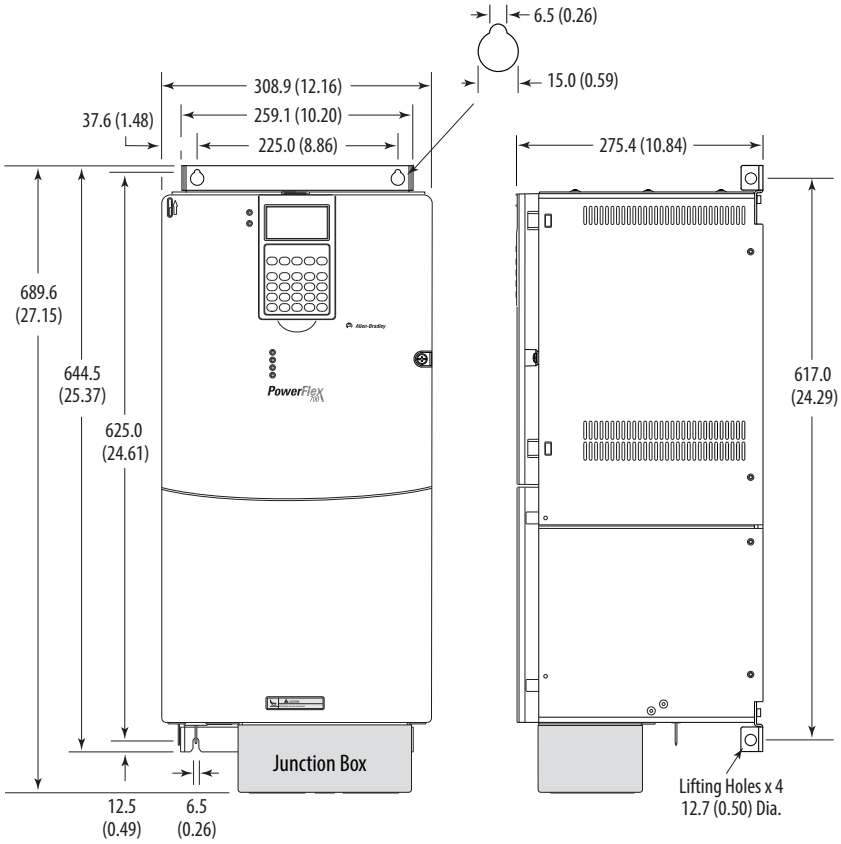

Dimensions are in millimeters and (inches)

Frame	Approx. Weight (1) kg (lbs.)	
	Drive	Drive & Packaging
5	37.19 (82.0)	49.50 (109.0)

(1) Weights include HIM and Standard I/O. Add 2.70 kg (6.0 lbs.) for the 20BC140 drive.

30 kW, 208V (40 Hp, 240V)
55 kW, 400V (75 Hp, 480V)
45/55/75 kW, 690V (75 Hp, 600V)

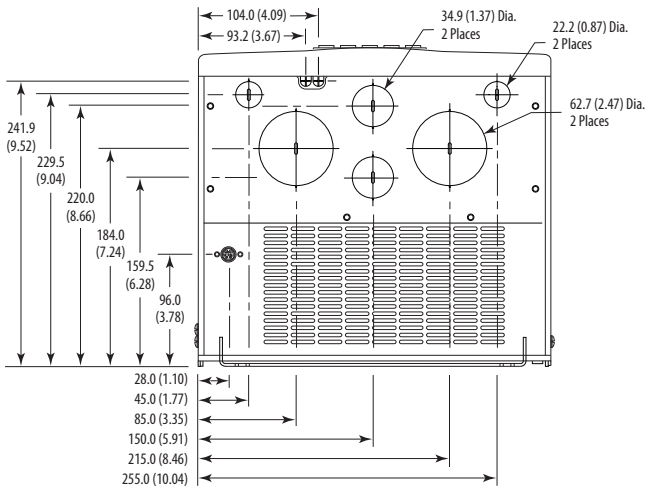

37 kW, 208V (50 Hp, 240V)
75 kW, 400V (100 Hp, 480V)
90kW, 690V (100 Hp, 600V)

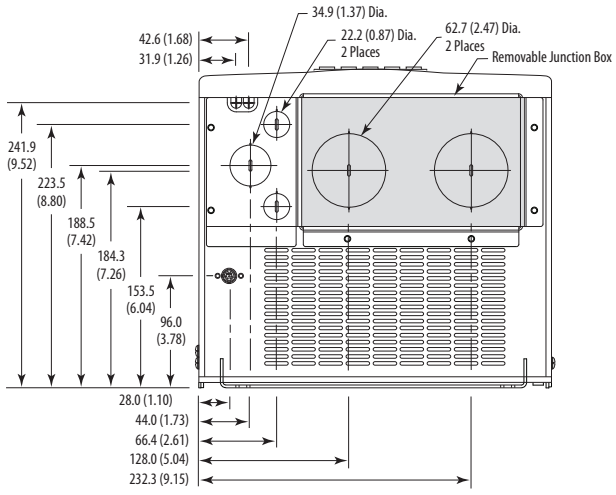

Frame 5 – IP54, NEMA Type 12 Standalone (400…690V drives only)

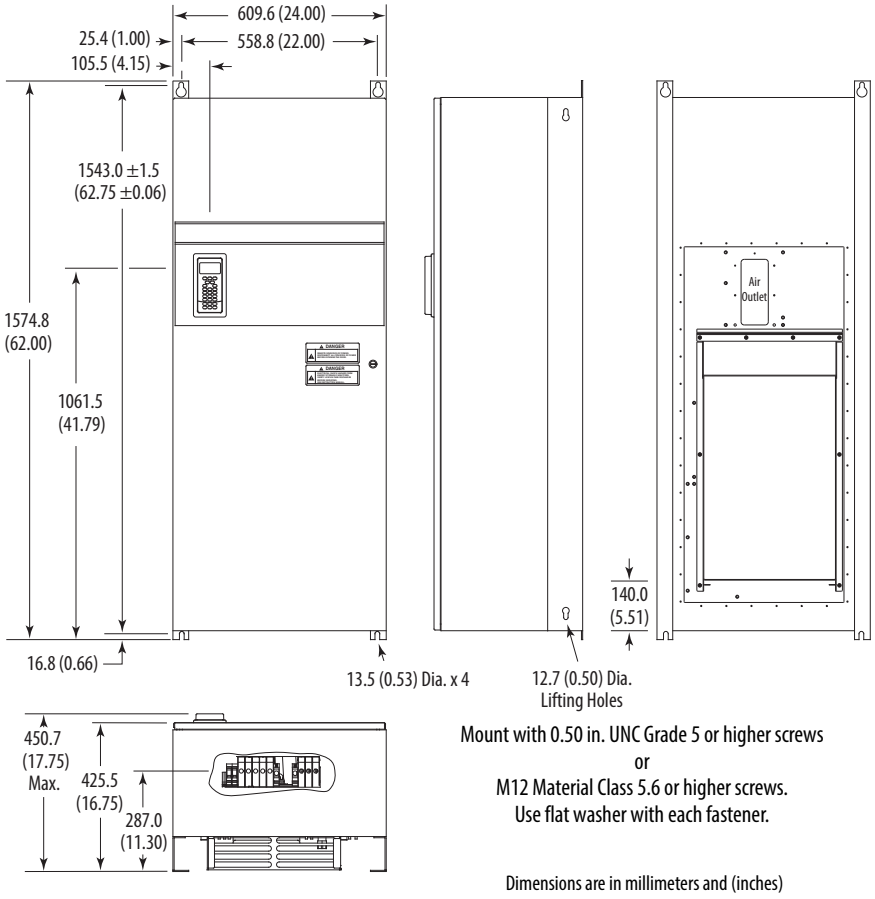

Frame	Description	Approx. Weight (1) kg (lbs.)	
		Drive	Drive & Packaging
5	Standalone	102.51 (226.0)	154.68 (341.0)

(1) Weights include HIM and Standard I/O.

Frame 5 – IP54, NEMA Type 12 Flange Mount (400…690V drives only)

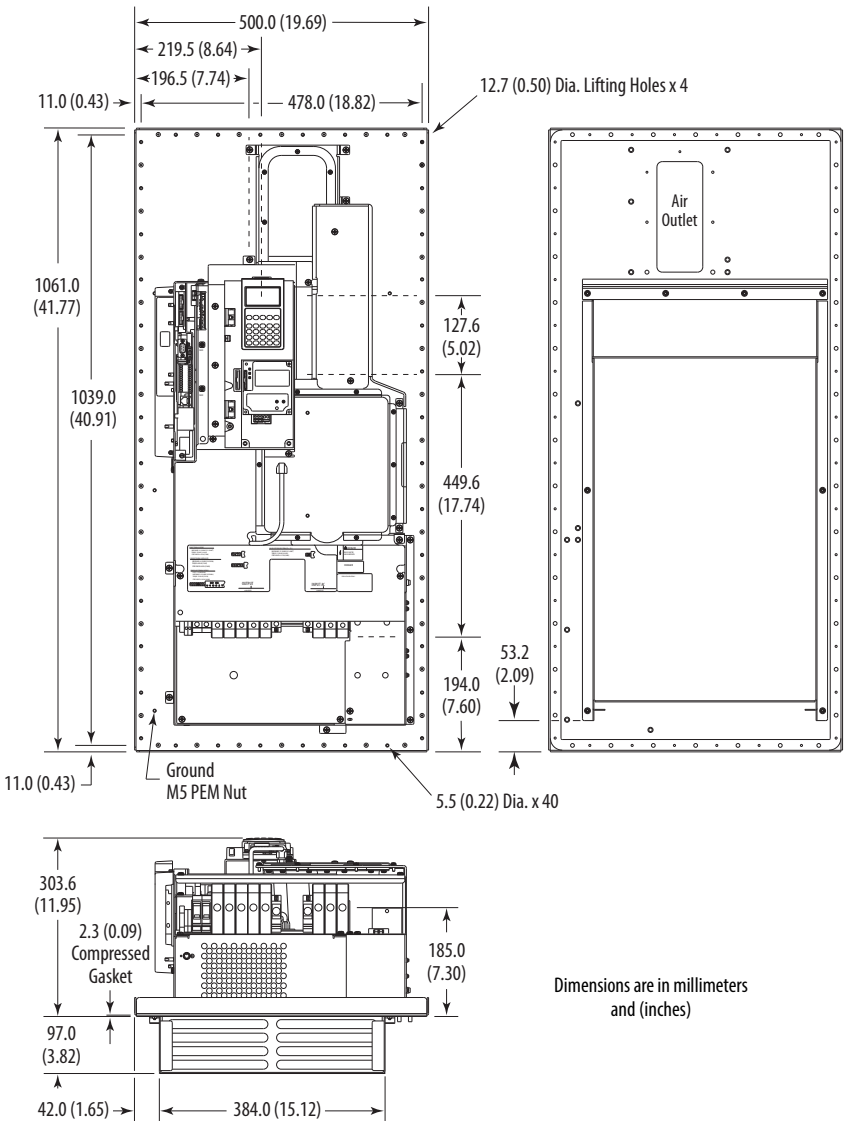

Frame	Description	Approx. Weight (1) kg (lbs.)	
		Drive	Drive & Packaging
5	Flange Mount	61.69 (136.0)	81.65 (180.0)

(1) Weights include HIM and Standard I/O.

Frame 5 – Flange Mount Cutout

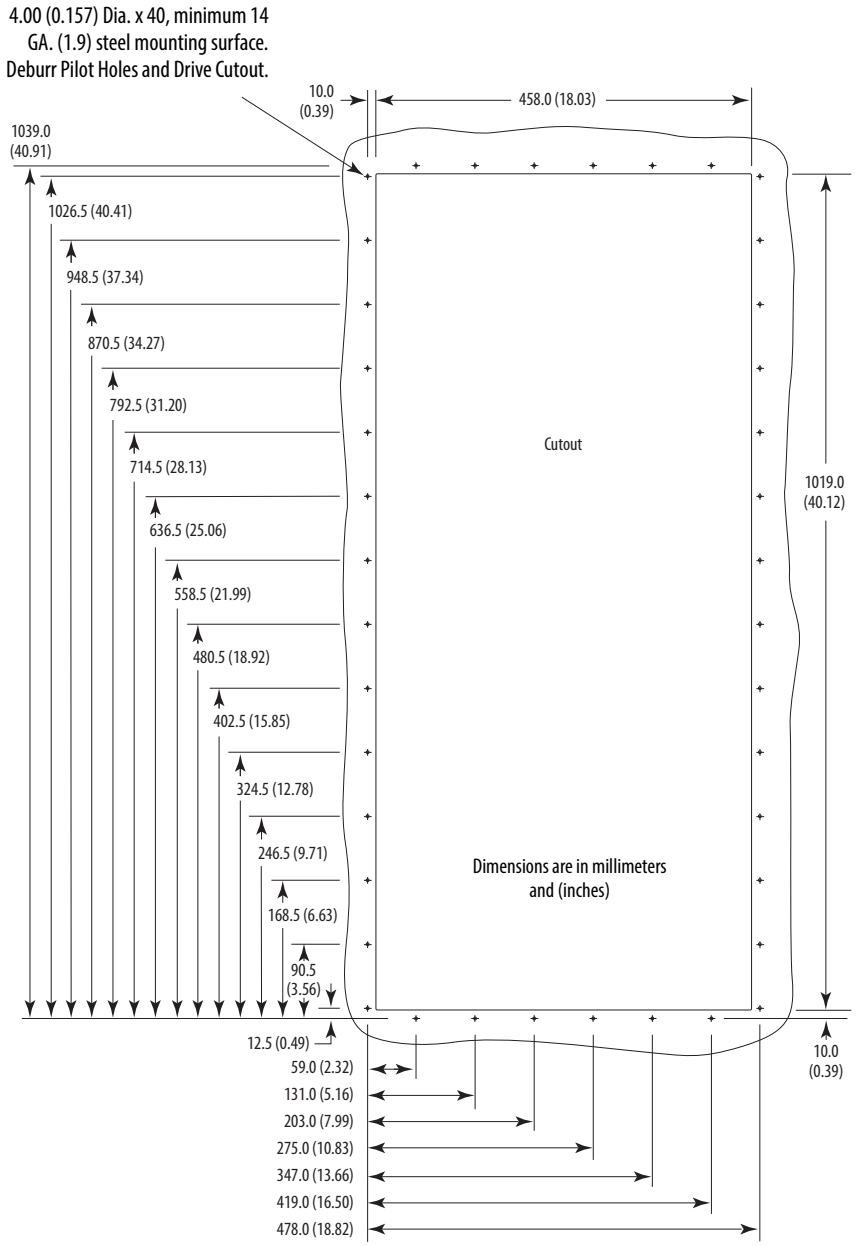

Frame 6 – IP20, NEMA / UL Type 1

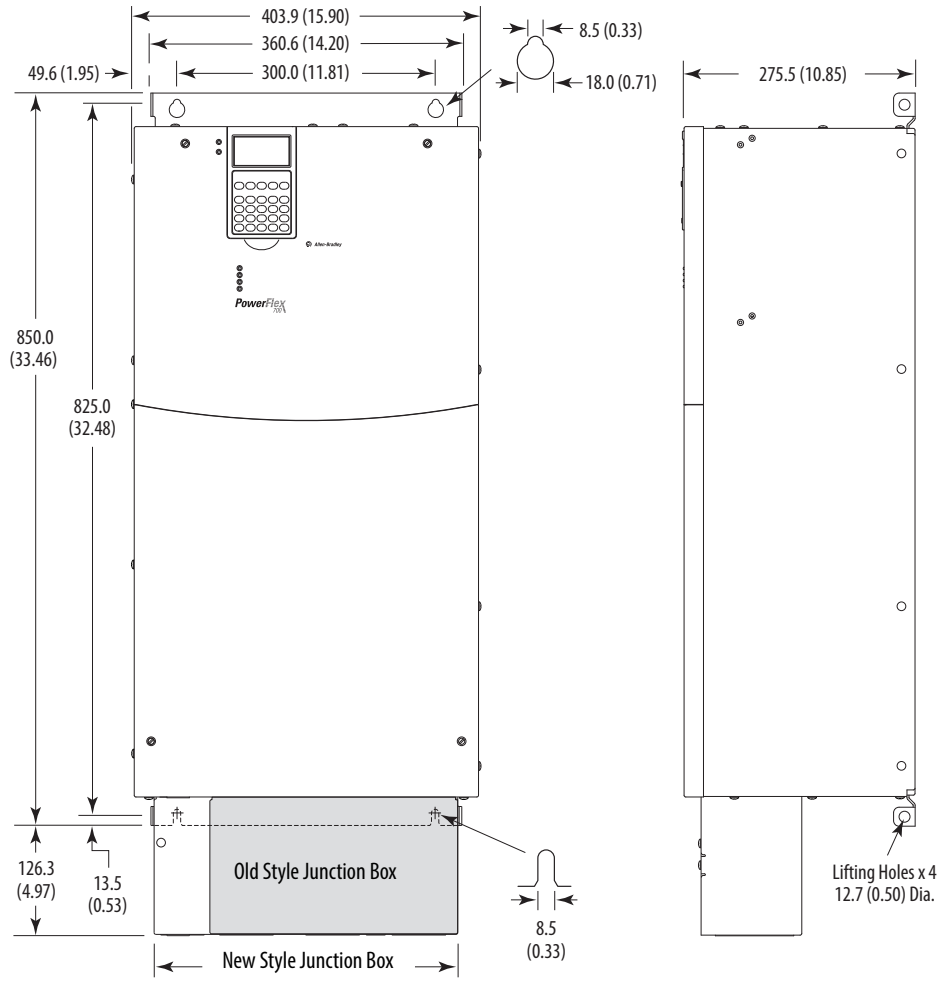

Junction Box can be removed if drive is mounted in a cabinet

Dimensions are in millimeters and (inches)

Frame	Approx. Weight (1) kg (lbs.)	
	Drive	Drive & Packaging
6	71.44 (157.5)	100.9 (222.0)

(1) Weights include HIM and Standard I/O. Add 13.60 kg (30.0 lbs.) for; 20BB260, 20BC260 and 20BD248.

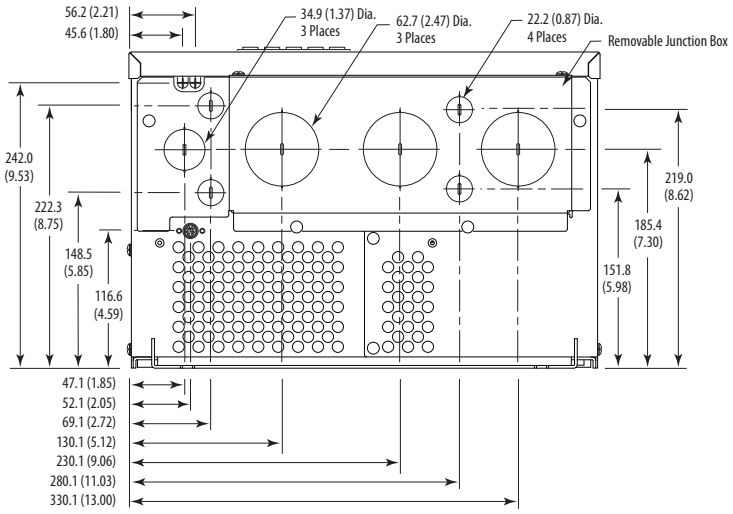

Frame 6 – IP54, NEMA Type 12 Standalone (400…690V drives only)

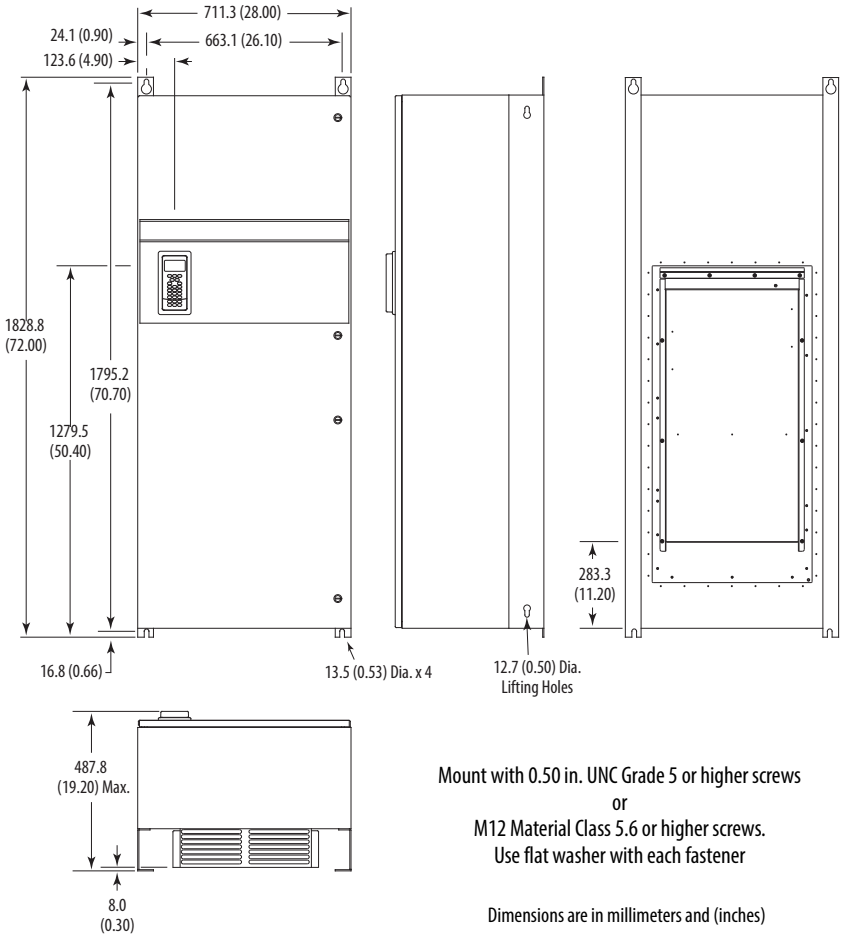

Frame	Description	Approx. Weight [1] kg (lbs.)	
		Drive	Drive & Packaging
6	Standalone	176.90 (390.0)	229.07 (505.0)

(1) Weights include HIM and Standard I/O.

Frame 6 – IP54, NEMA Type 12 Flange Mount (400…690V drives only)

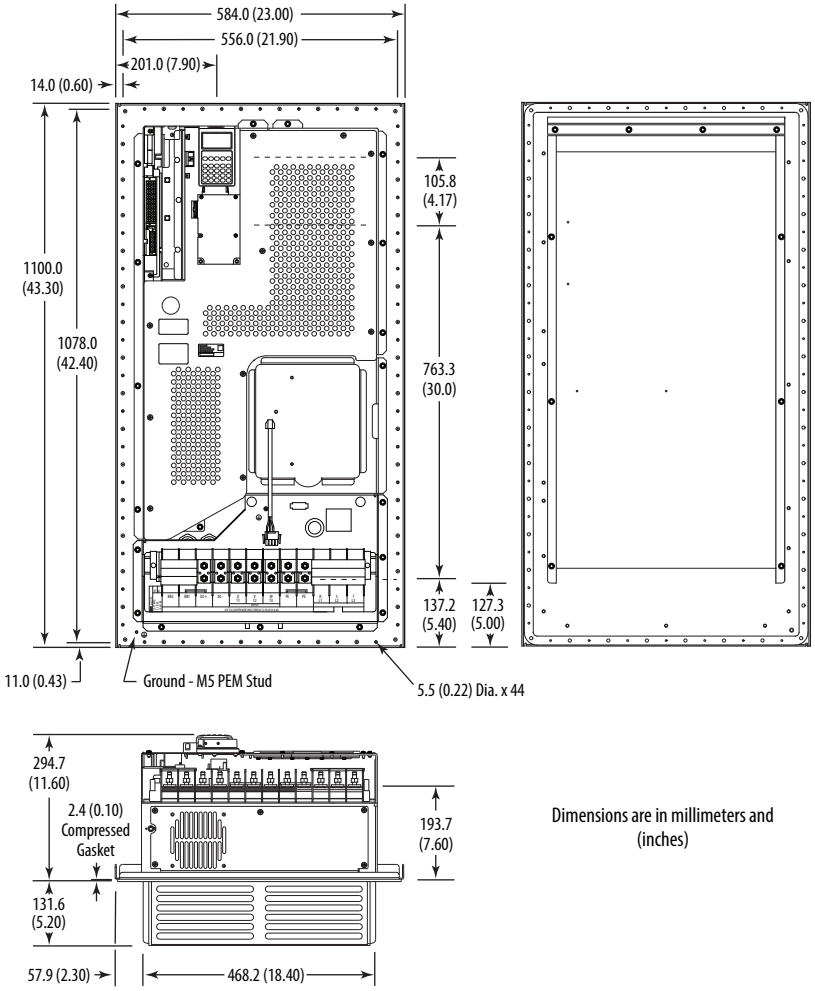

Dimensions are in millimeters and (inches)

Frame	Description	Approx. Weight (1) kg (lbs.)	
		Drive	Drive & Packaging
6	Flange Mount	99.79 (220.0)	119.75 (264.0)

(1) Weights include HIM and Standard I/O.

Frame 6 – Flange Mount Cutout

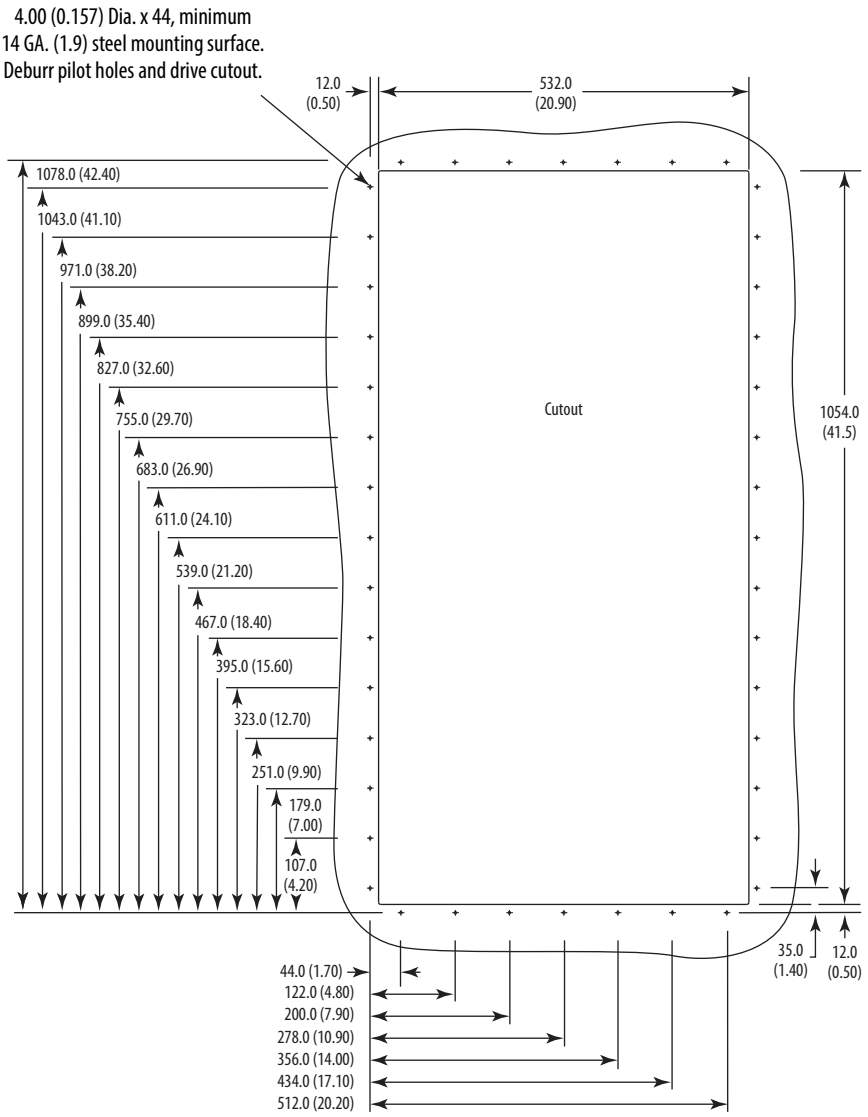

Dimensions are in millimeters and (inches)

Frame 7 – IP20, NEMA / UL Type 1

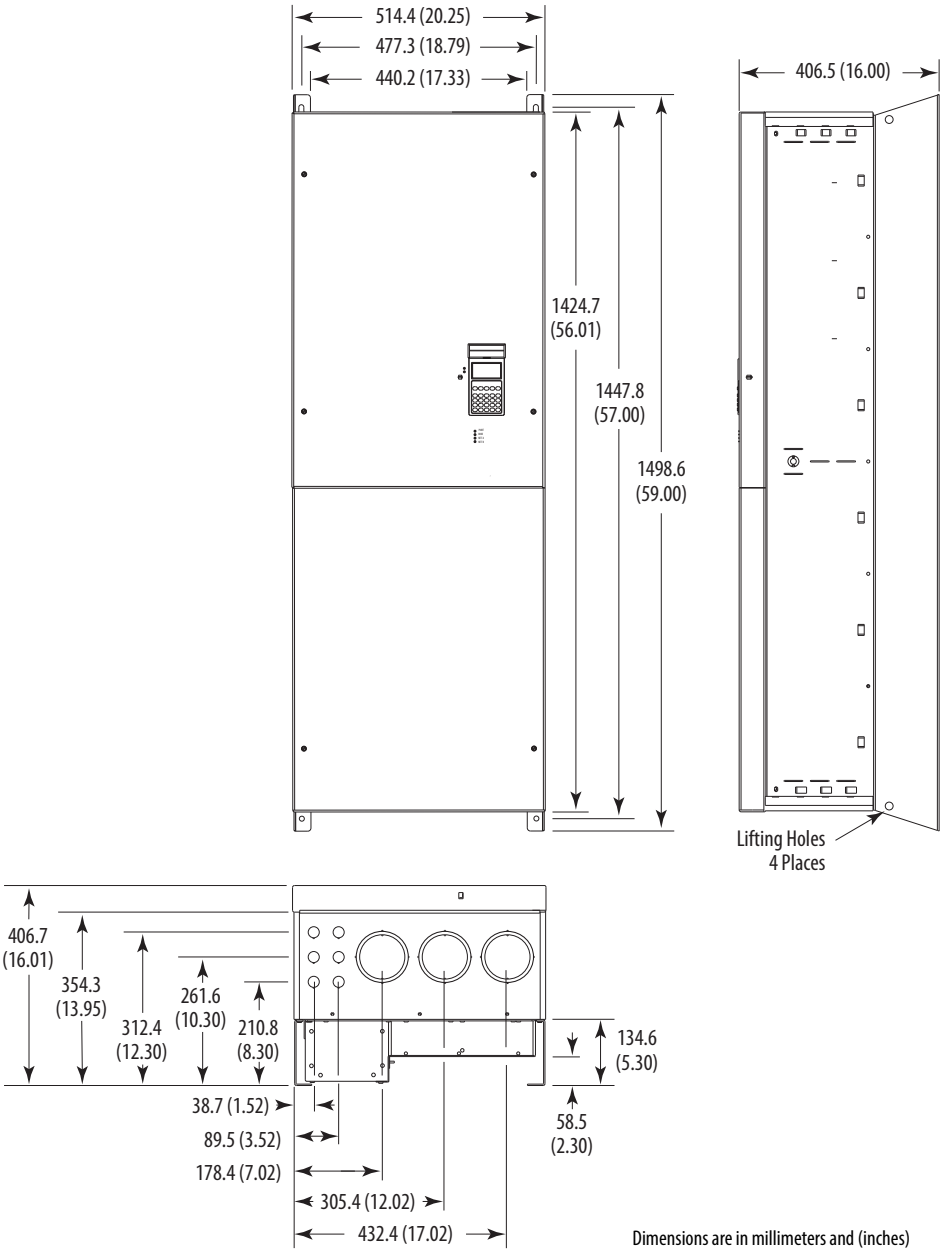

Dimensions are in millimeters and (inches)

Approx. Weight kg (lbs.)	
Drive	**Drive & Packaging**
170 (375)	196 (433)

Frame 7 – IP00, NEMA / UL Type Open

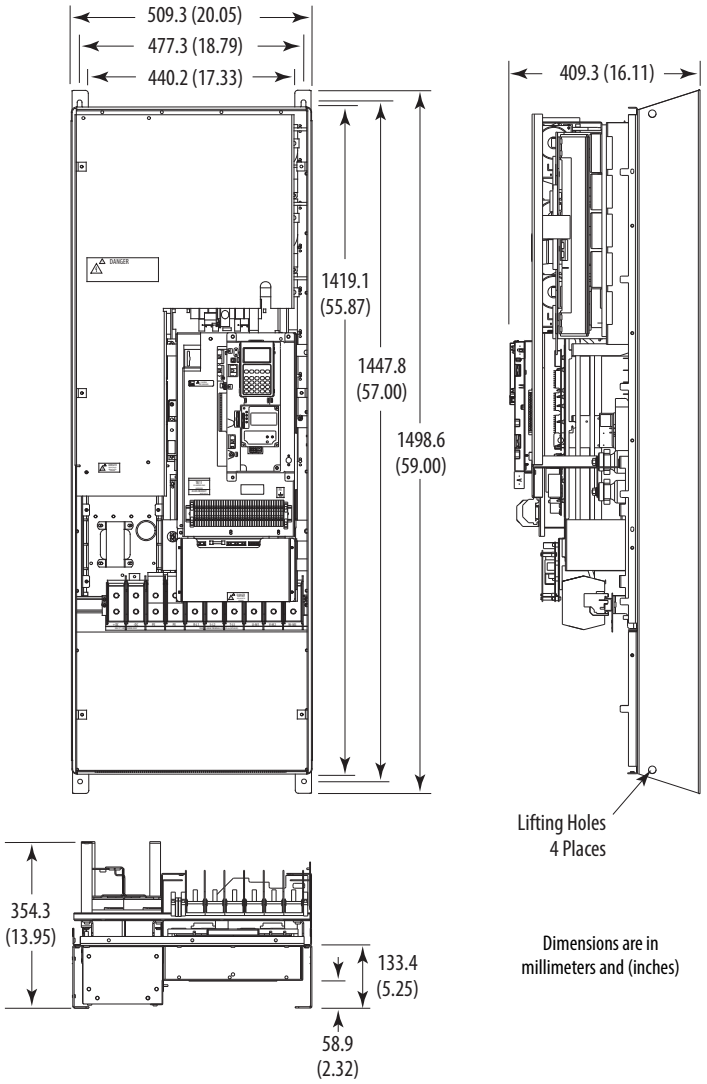

Approx. Weight kg (lbs.)	
Drive	**Drive & Packaging**
147 (324)	173 (382)

Frame 7 – Flange Mount Cutout

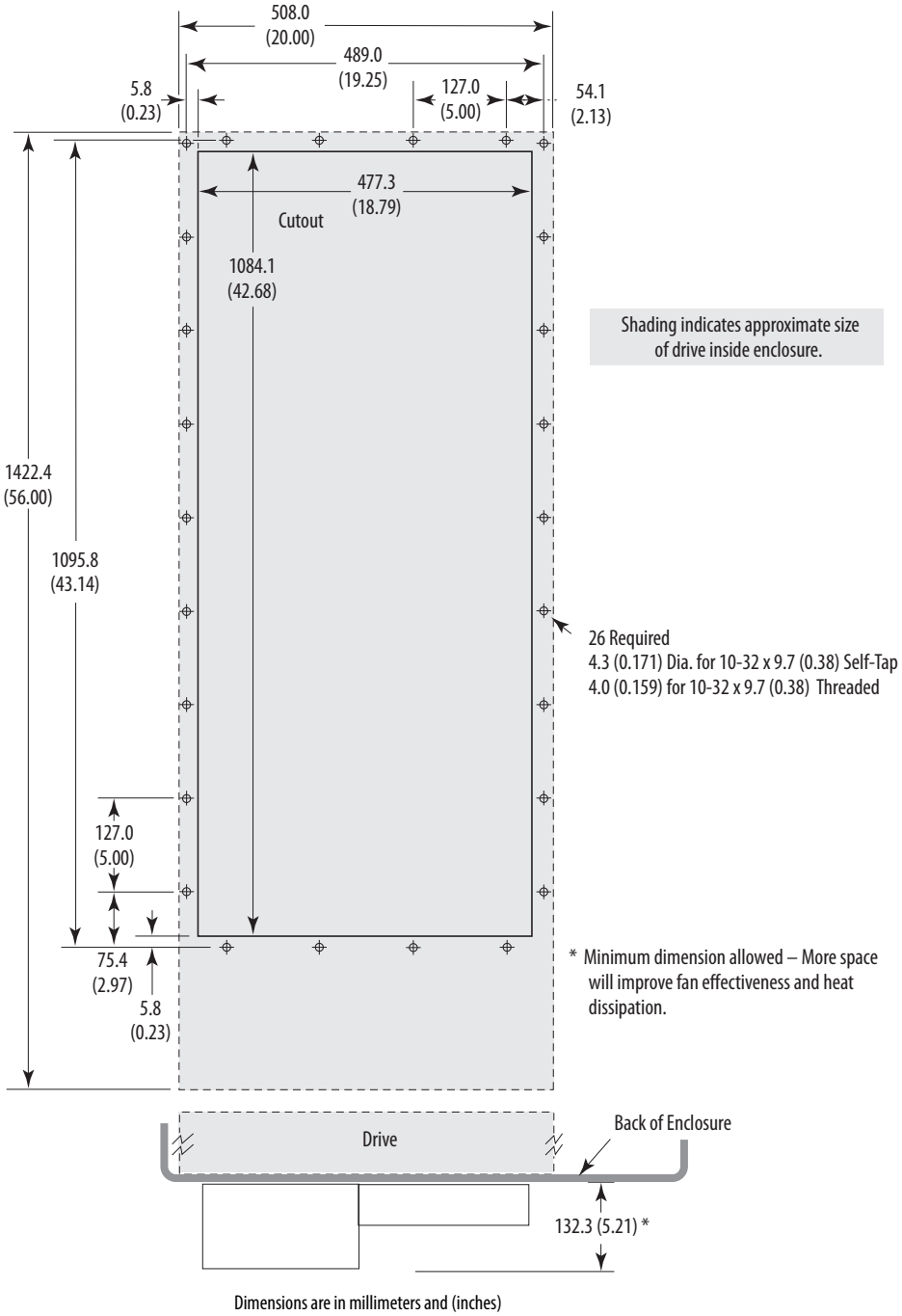

IMPORTANT Use gasket kit catalog number SK-G1-GASKET1-F7 with user supplied IP54, NEMA / UL Type 12 enclosure.

Frames 8…9 – IP20, NEMA / UL Type 1

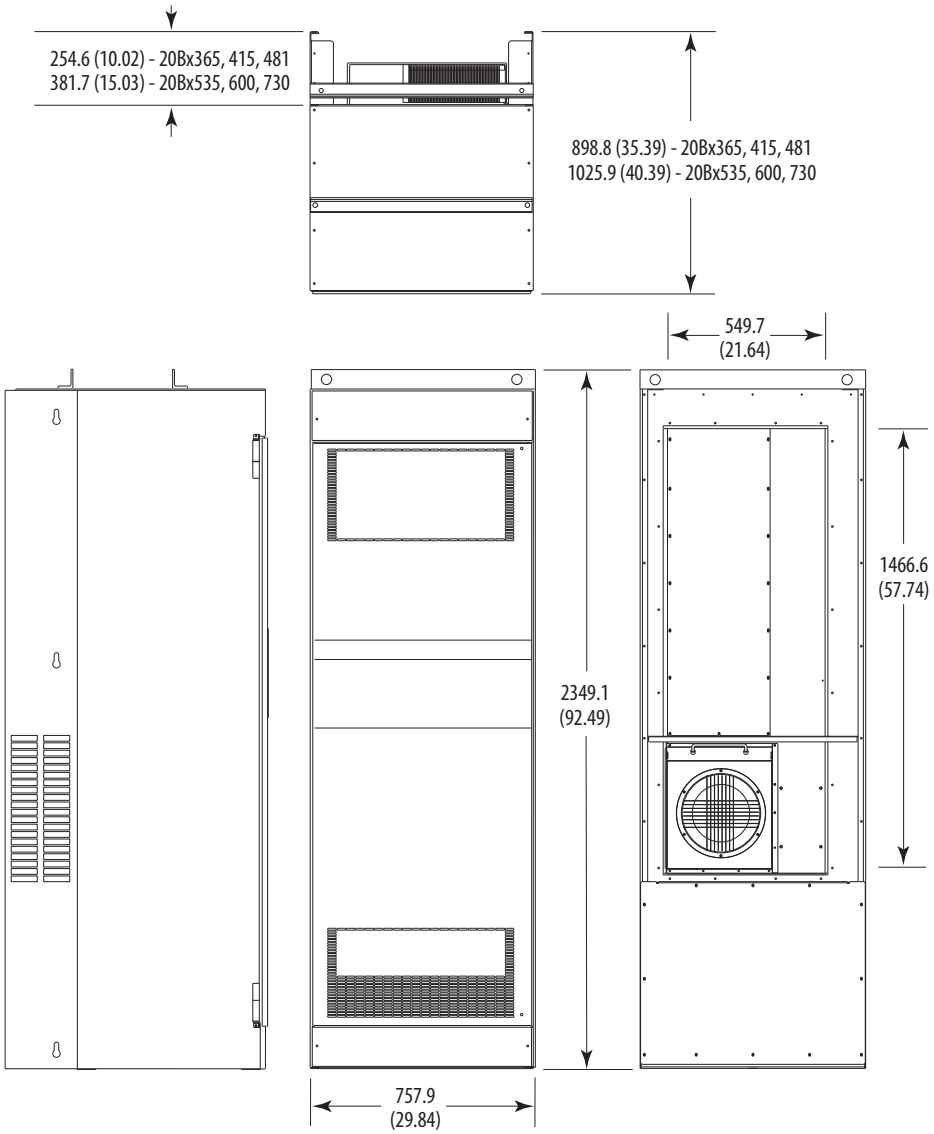

Dimensions are in millimeters and (inches)

Approx. Weight kg (lbs.)		
Frame	**Drive**	**Drive & Packaging**
8	509 (1122)	556 (1225)
9	526 (1159)	603 (1262)

Frames 8…9 – IP00, NEMA / UL Type Open

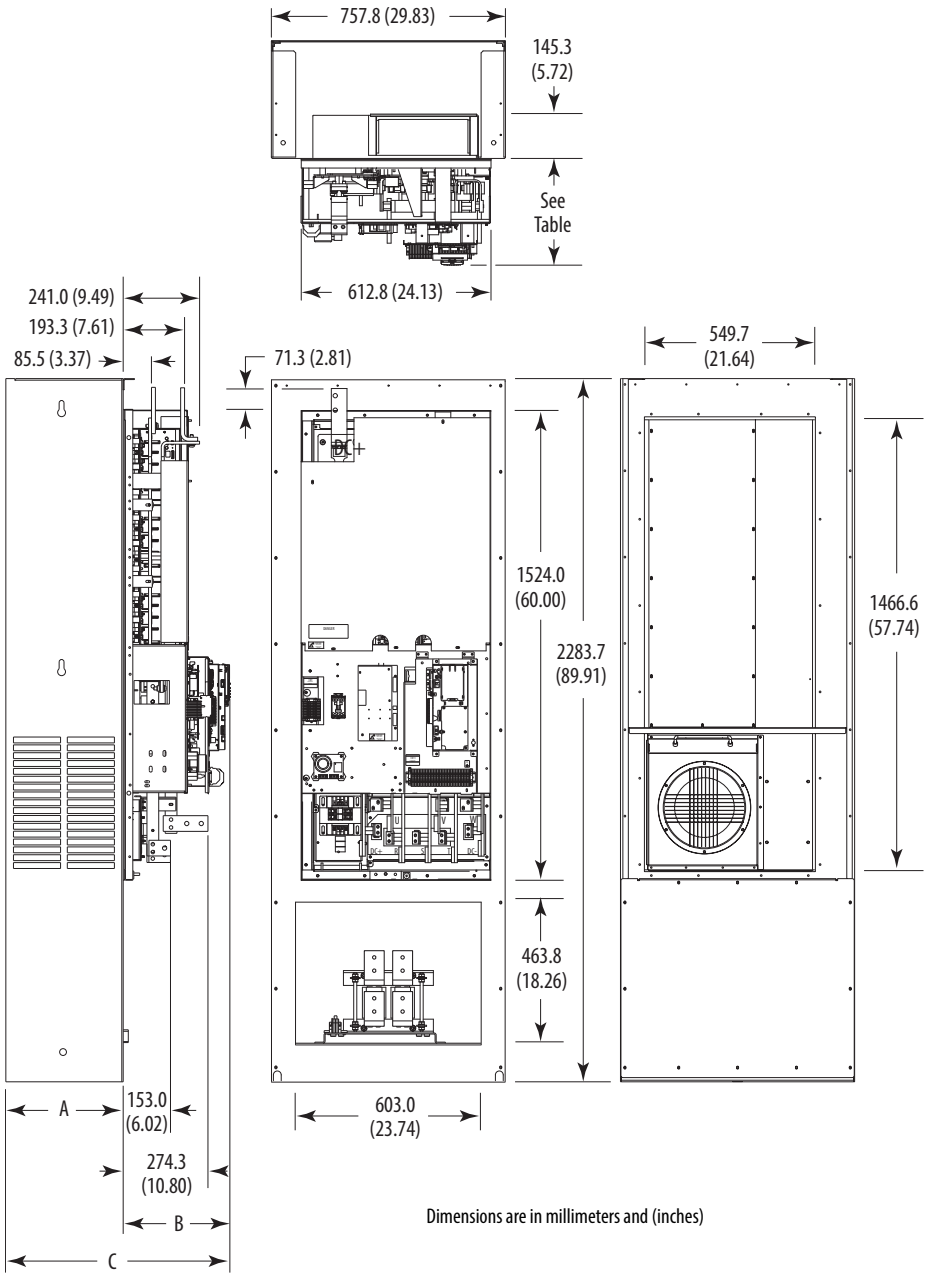

Dimensions are in millimeters and (inches)

Frame	Cat. No.	A	B	C	Approx. Weight kg (lbs.)	
					Drive	Drive & Packaging
8	20Bx365, 415, 481	254.6 (10.02)	345.3 (13.59)	599.4 (23.60)	384 (847)	431 (950)
	20Bx535, 600	381.7 (15.03)	345.5 (13.60)	726.6 (28.61)	384 (847)	431 (950)
9	20Bx730	381.1 (15.00)	345.3 (13.60)	771.9 (30.39)	401 (884)	448 (987)

Frames 8…9 – Converting an IP00 Drive for Flange Mounting

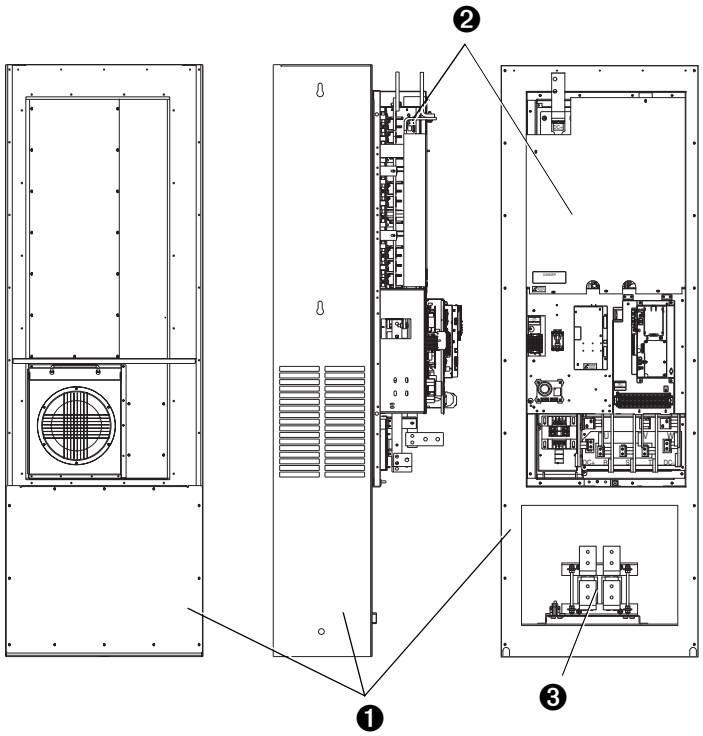

No.	Component
❶	Remove these IP00 enclosure components.
❷	Drive assembly to be flange mounted.
❸	DC link choke - mounts separately in enclosure (see page 72 for dimensions) and is wired directly to drive.

Frames 8…9 Roll-In – IP00, NEMA / UL Type Open

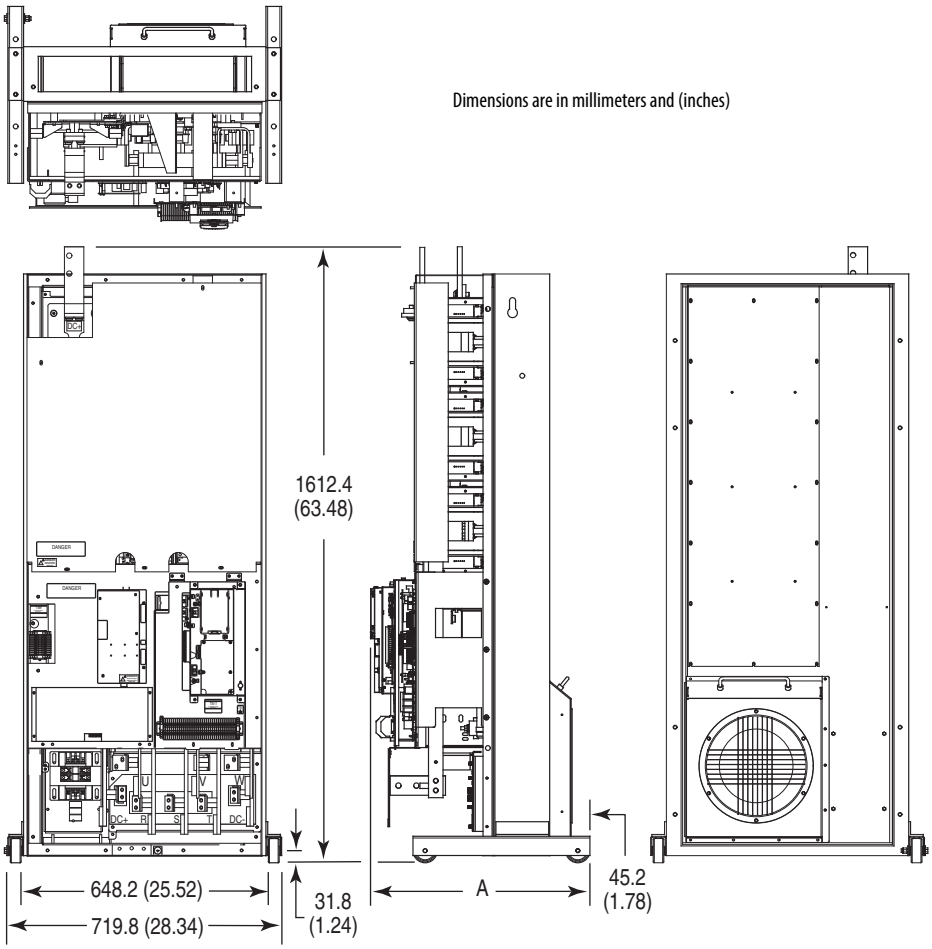

Frame	Cat. No.	A	Approx. Weight kg (lbs.)	
			Drive	Drive & Packaging
8	20Bx365, 415, 481	574.8 (22.63)	250 (552)	297 (655)
8	20Bx535, 600	574.8 (22.63)	250 (552)	297 (655)
9	20Bx730	594.3 (23.40)	267 (589)	314 (692)

Frames 8…9 Roll-In Mounting Considerations

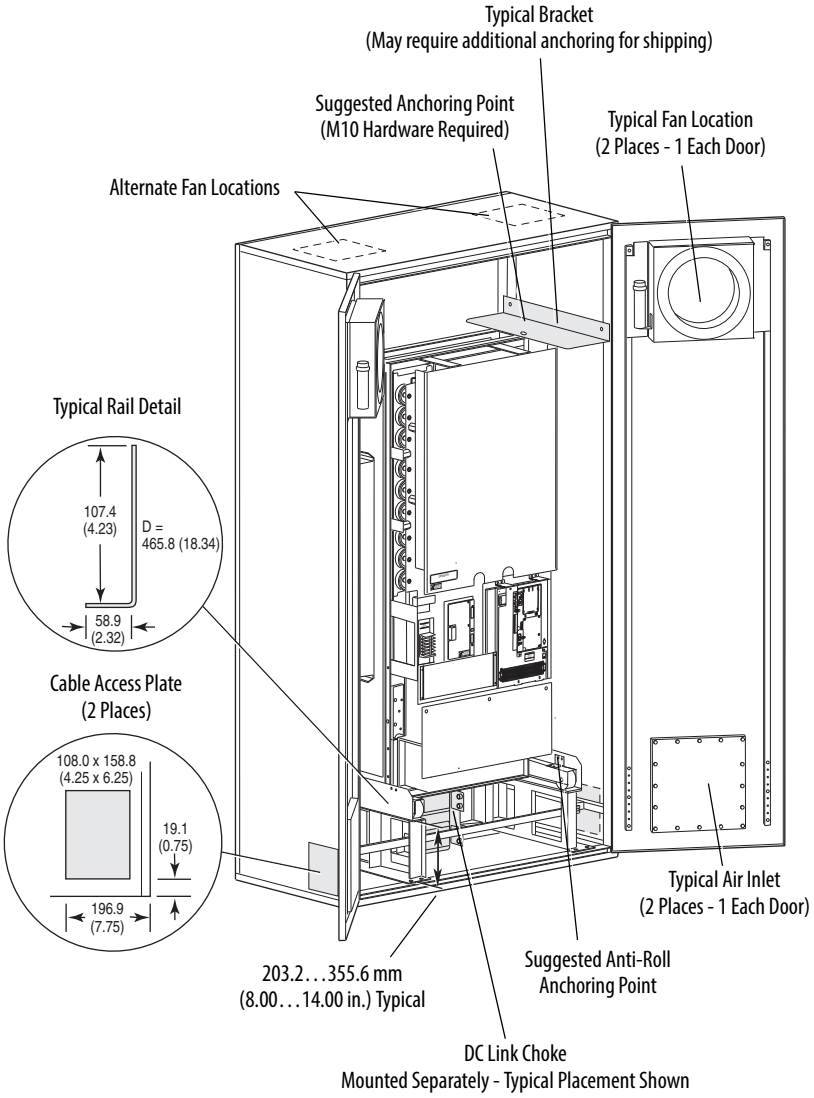

IMPORTANT This information illustrates how an open roll-in style drive could be mounted in a user supplied enclosure. Illustrations are intended only to identify structural mounting points and hardware shapes. You must design and fabricate steel components based on the actual mounting configuration, calculated loads and enclosure specifications. Minimum thickness of all parts = 4.6 mm (0.18 in.).

Frames 8…9 Flange Mount Cutout

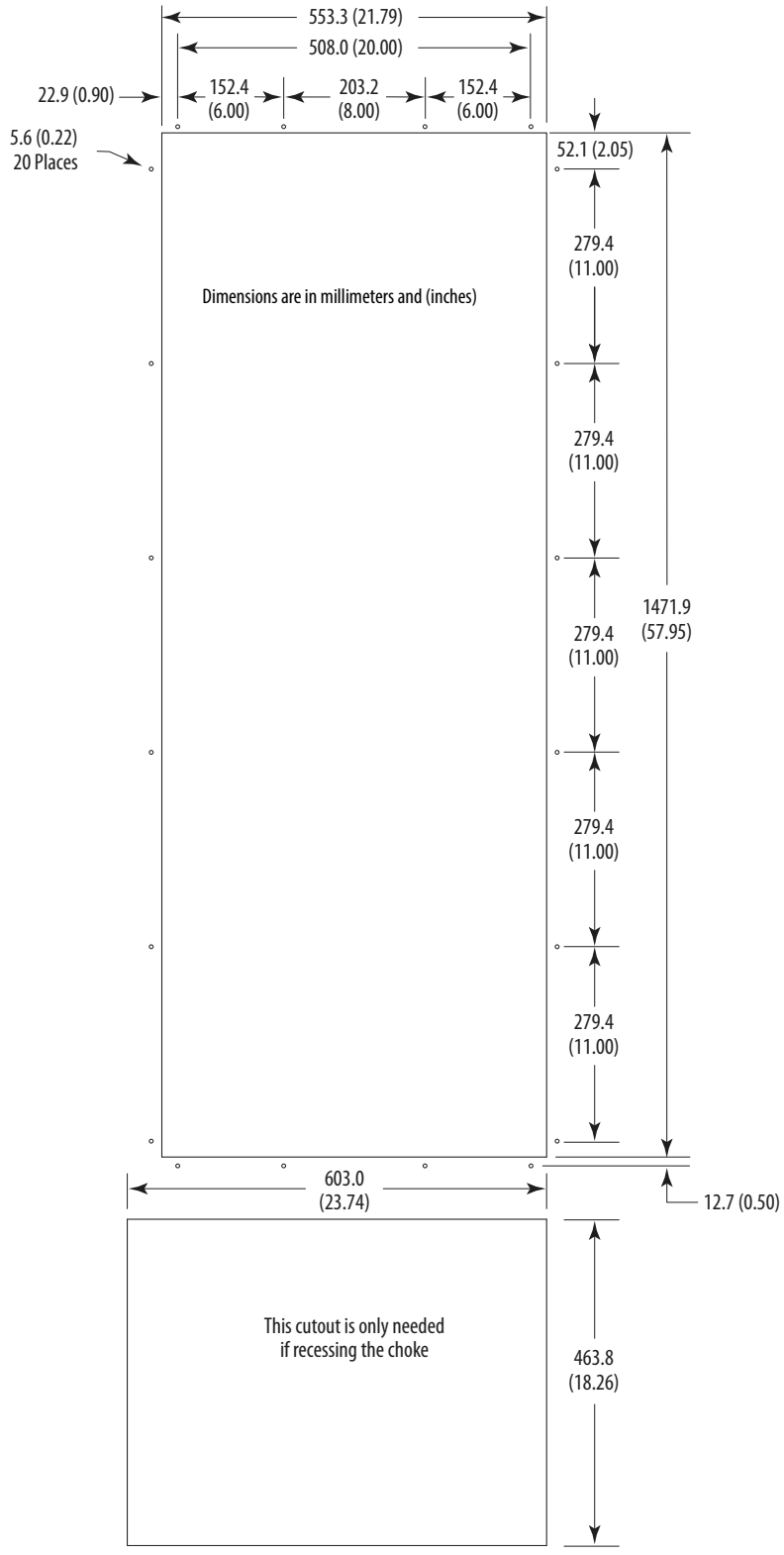

IMPORTANT Use gasket kit catalog number SK-G1-GASKET1-F89 with user supplied IP54, NEMA / UL Type 12 enclosure.

DC Link Chokes

Frame 8

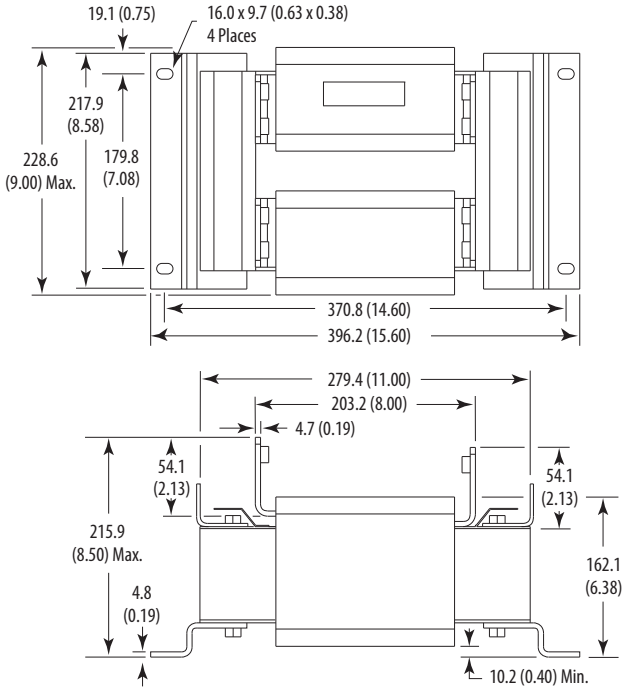

Frame 9

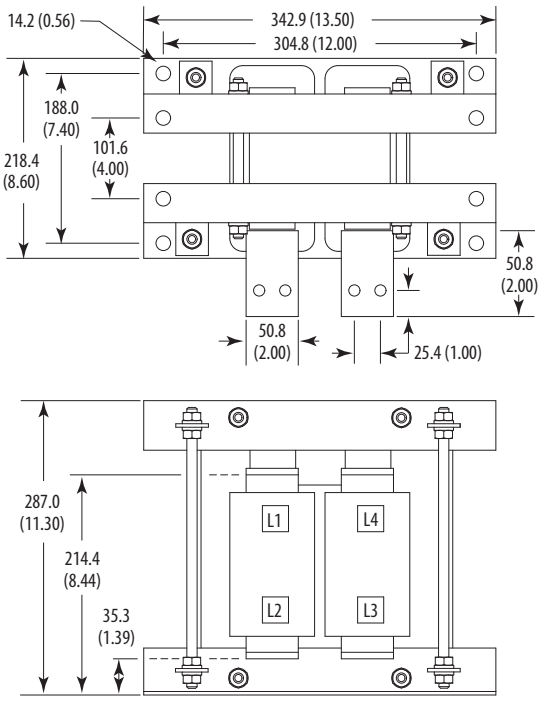

Frame 10

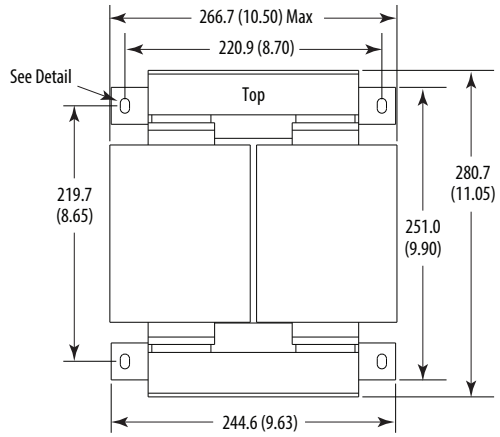

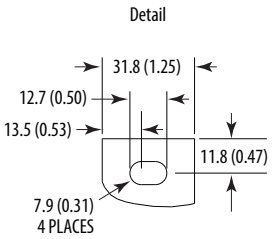

Dimensions are in millimeters and (inches)

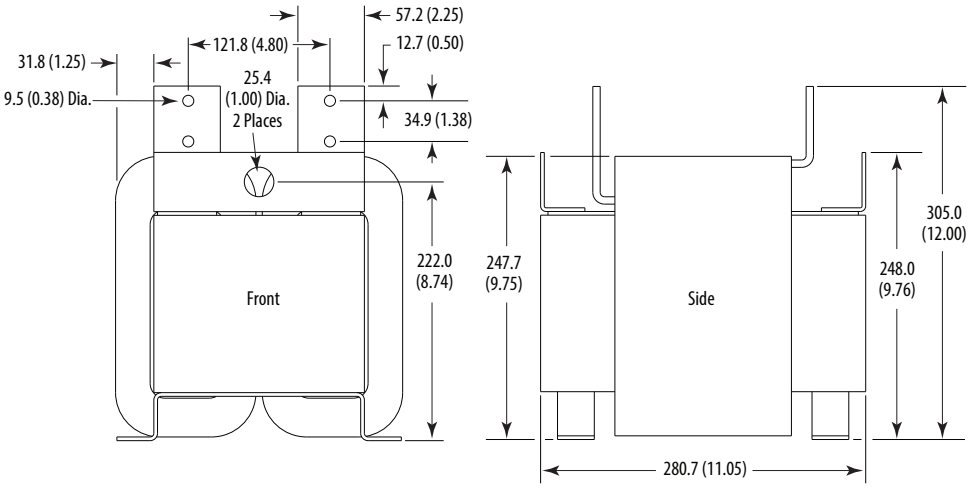

Frame 10 – IP20, NEMA / UL Type 1
AC Input Shown, for DC Input Dimensions use the Inverter (Left) Bay

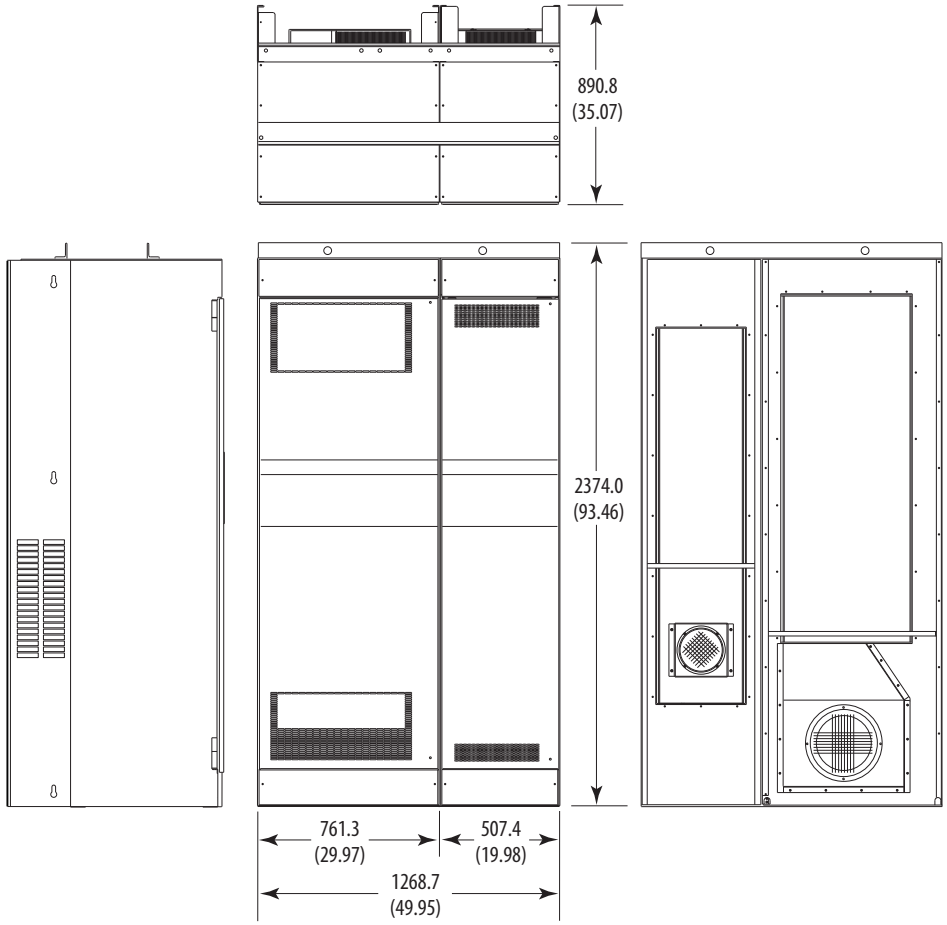

Dimensions are in millimeters and (inches)

Approx. Weight kg (lbs.)		
Type	**Drive**	**Drive & Packaging**
DC Input	468 (1032)	515 (1135)
AC Input	867 (1912)	958 (2112)

Frame 10 – IP00, NEMA / UL Type Open

AC Input Shown, for DC Input Dimensions use the Inverter (Left) Bay

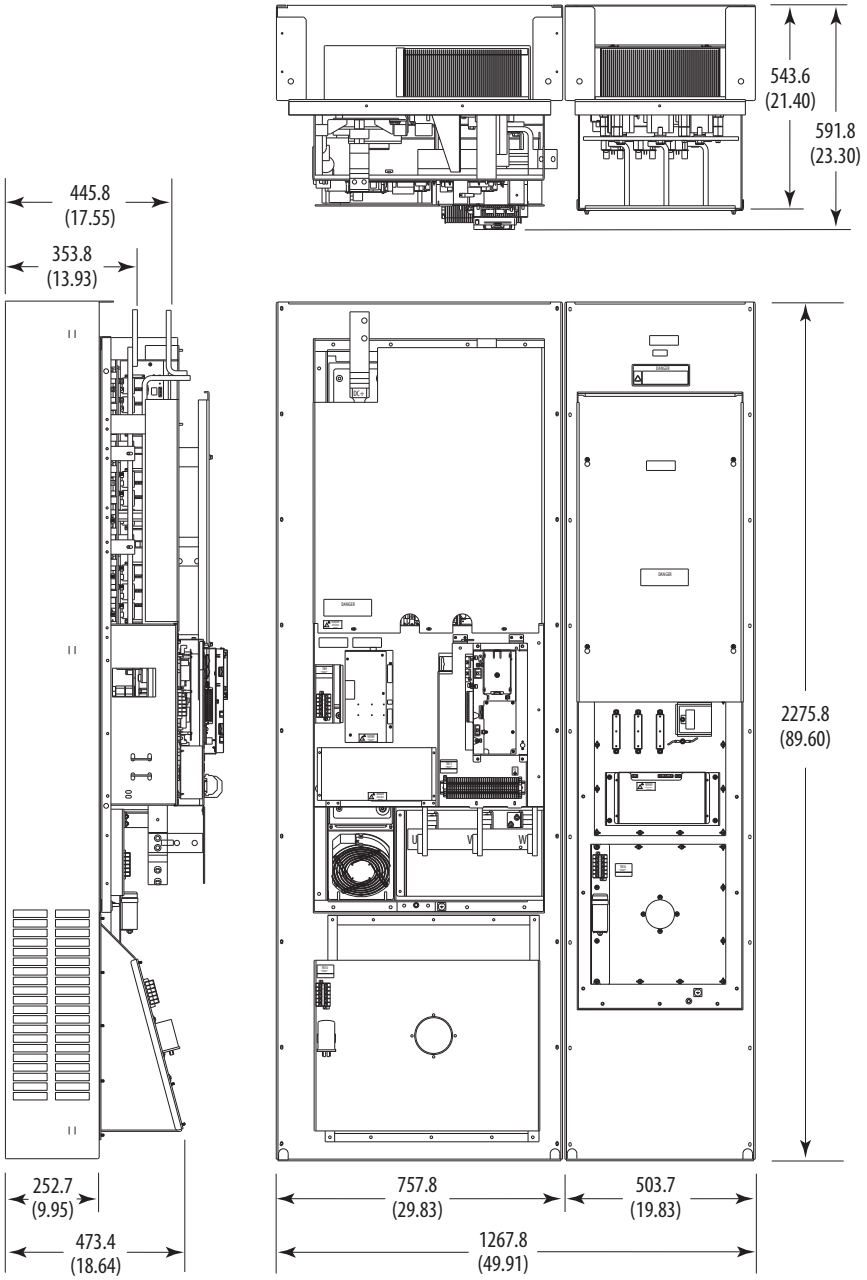

Dimensions are in millimeters and (inches)

Approx. Weight kg (lbs.)		
Type	**Drive**	**Drive & Packaging**
DC Input	305 (672)	352 (775)
AC Input	532 (1172)	623 (1372)

Frame 10 – Flange Mount Cutout

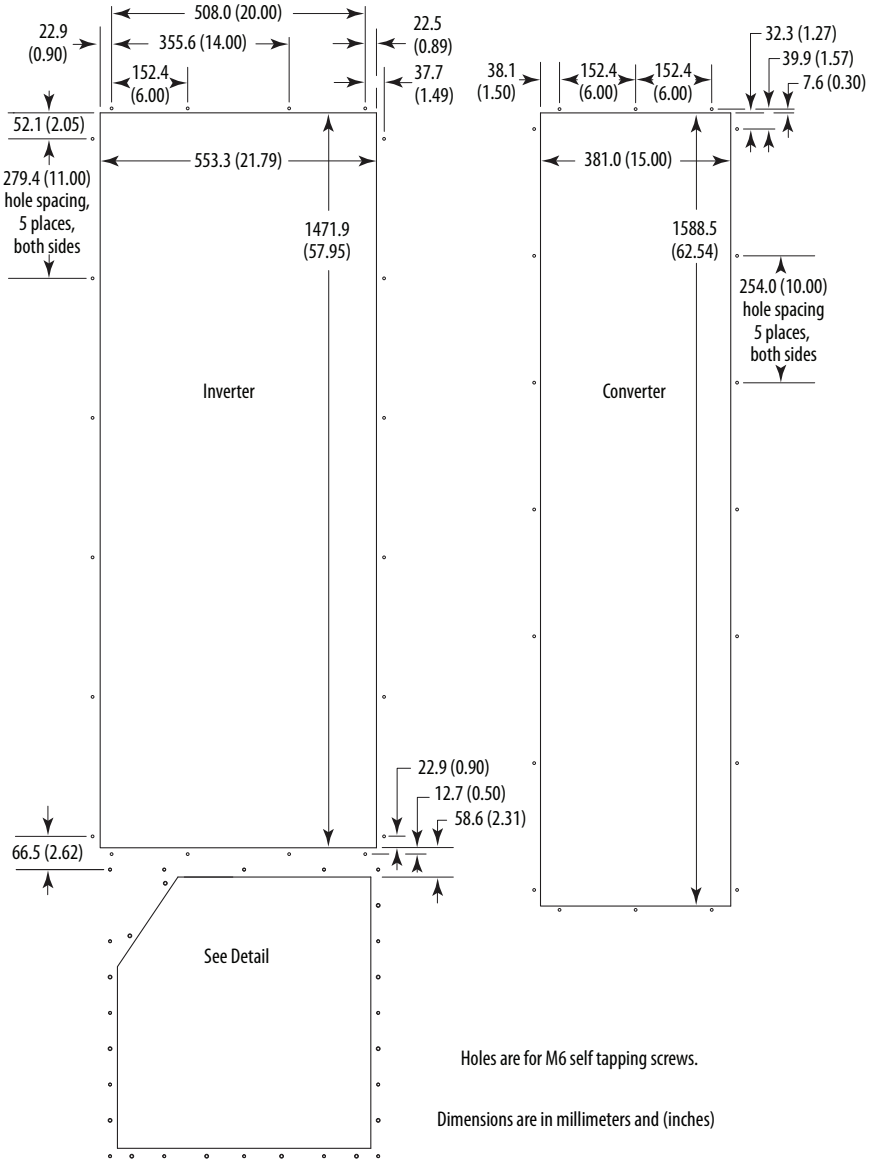

IMPORTANT Backplate and extension are a single piece. Drive chassis can be removed from backplate to mount in user supplied IP54, NEMA / UL Type 12 enclosure.

Frame 10 – Flange Mount Cutout Detail

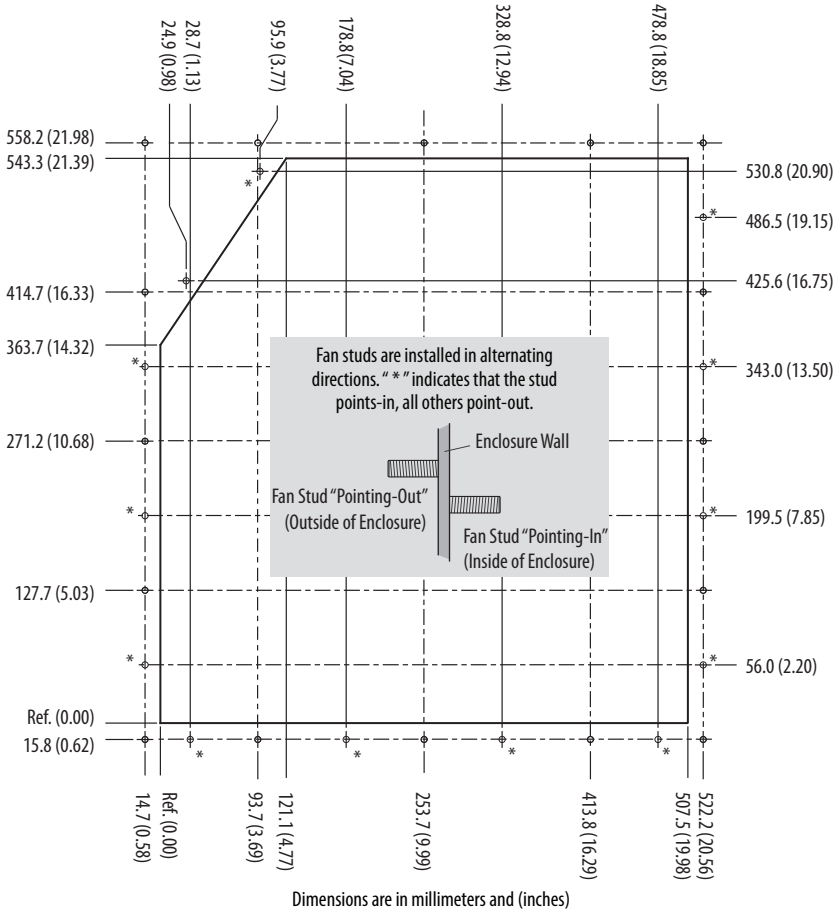

IMPORTANT Backplate and extension are a single piece. Drive chassis can be removed from backplate to mount in user supplied IP54, NEMA / UL Type 12 enclosure.

PowerFlex 700 Packaged Drives

Product Description

PowerFlex 700 Packaged Drives are ideal for global Original Equipment Manufacturers (OEM) and end users with special installation needs. This program simplifies installation and start-up by allowing users to order drive packages that combine operator interface, control, communications and power options in pre-configured assemblies. Designed to meet customer demands for space savings, application flexibility and reliability, Packaged PowerFlex 700 AC drives offer a number of commonly requested pre-engineered options, as well as more complex custom-engineered packages.

Benefits

- Simplified installation and start-up by use of common options assembled at the factory.
- Drive functionality exceeds options offered with a standard drive.
- Multiple packaging options specific to customer needs.
- Pre-engineered options for easy order entry, consistent manufacturing, high quality and reduced deliveries.
- Selectable configurations to meet application requirements.

Features

- Standard PowerFlex 700 AC drives and drive-related options.
- Six pulse and multi-pulse.
- Tuned harmonic filters.
- Enclosure options: Type 1, Type 12 (fan and filter or convection/AC), and Type 4 (indoor).
- Pre-engineered options.
- Custom/engineered solutions.
- UL panel recognition from the factory for pre-engineered options.

Options

- Drive Input Protection
- Input/Output Contactors
- Input/Output Line Reactors
- Bypass
- Control Power
- Control Interface and Feedback
- Communication
- Human Interface Module (HIM)
- Motor Interface
- Door Mounted Operator Devices

Please contact your local distributor or sales office for product availability.

Drive Options

Human Interface Modules

Description	Cat. No.
No HIM (Blank Plate), Handheld/Local (Drive Mount)	20-HIM-A0
LCD Display, Full Numeric Keypad, Handheld/Local (Drive Mount)	20-HIM-A3
Enhanced, LCD, Full Numeric Keypad, Handheld/Local (Drive Mount)	20-HIM-A6
Remote (Panel Mount) LCD Display, Full Numeric Keypad (1) (2)	20-HIM-C3S
Enhanced, LCD, Full Numeric Keypad ?‡	20-HIM-C6S

(1) IP66, NEMA Type 4X/12 - For indoor use only.

(2) Includes a 1202-C30 interface cable (3 meters) for connection to drive.

Human Interface Module Accessories

Description	Cat. No.
Bezel Kit for LCD HIMs, NEMA Type 1 (1)	20-HIM-B1
PowerFlex HIM Interface Cable, 1 m (39 in) (2)	20-HIM-H10
Comm Option Cable Kit (Male-Male) 0.33 Meters (1.1 Feet) 1 Meter (3.3 Feet) 3 Meter (9.8 Feet) 9 Meter (29.5 Feet)	 1202-C03 1202-C10 1202-C30 1202-C90
Cable Kit (Male-Female) (3) 0.33 Meters (1.1 Feet) 1 Meter (3.3 Feet) 3 Meter (9.8 Feet) 9 Meter (29.5 Feet)	 1202-H03 1202-H10 1202-H30 1202-H90
DPI Cable Kit with Connectors, Tools and 100 m (328 ft.) Cable	1202-CBL-KIT-100M
DPI Cable Connector Kit	1202-TB-KIT-SET
DPI/SCANport™ One toTwo Port Splitter Cable	1203-S03

(1) Includes a 1202-C30 interface cable (3 meters) for connection to drive.

(2) Required only when HIM is used as handheld or remote.

(3) Required in addition to 20-HIM-H10 for distances up to a total maximum of 10 Meters (32.8 Feet).

Communication Option Kits and Accessories

Description	Cat. No.
BACnet® MS/TP RS485 Communication Adapter	20-COMM-B
ControlNet Communication Adapter (Coax)	20-COMM-C
DeviceNet Communication Adapter	20-COMM-D
EtherNet/IP™ Communication Adapter	20-COMM-E
Dual-port EtherNet/IP™ Communication Adapter	20-COMM-ER (2)
HVAC Communication Adapter (Only Modbus RTU can be used)	20-COMM-H
CANopen® Communication Adapter	20-COMM-K
LonWorks® Communication Adapter	20-COMM-L
Modbus/TCP Communication Adapter	20-COMM-M
PROFIBUS™ DP Communication Adapter	20-COMM-P
ControlNet Communication Adapter (Fiber)	20-COMM-Q
Remote I/O Communication Adapter	20-COMM-R (3)
RS485 DF1 Communication Adapter	20-COMM-S
External Communications Kit Power Supply	20-XCOMM-AC-PS1
DPI External Communications Kit	20-XCOMM-DC-BASE
External DPI I/O Option Board (1)	20-XCOMM-IO-OPT1
Compact I/O™ Module (3 Channel)	1769-SM1
Serial Null Modem Adapter	1203-SNM
Smart Self-powered Serial Converter (RS232) includes 1203-SFC and 1202-C10 Cables	1203-SSS
Universal Serial Bus™ (USB) Converter includes 2 m USB, 20-HIM-H10 & 22-HIM-H10 Cables	1203-USB

(1) For use only with DPI External Communications Kits 20-XCOMM-DC-BASE.

(2) Contact your local Rockwell Automation sales office or Allen-Bradley distributor for availability.

(3) This item has Silver Series status. For information, refer to http://www.ab.com/silver.

Feedback Options

Description	Cat. No.
12V/5V Encoder (1)	20B-ENC-1

(1) Vector Control only.

Other Options

Description	Cat. No.
Removable I/O Terminal Block	SK-G9-TB1-S1
Removable Encoder Terminal Block	SK-G9-TB1-ENC1

PowerFlex 700 Control Option Kits

Control with I/O	Factory Installed Cat. Code # (2)	Cat. No.
Vector Control - 24V DC with: (1)		
60 Hz Maximum	NNAD	20B-VECT-C0AD
82 Hz Maximum	NNAX	20B-VECTB-C0AX
Cascading Fan/Pump Control	NNAE	20B-VECT-C0AE
Pump Off (for Pump Jack)	NNBA	20B-VECTB-C0BA
Vector Control - 115V AC(1)	D (3)	20B-VECTB-D0
Vector Control - 115V AC with:(1)		
60 Hz Maximum	NNAD	20B-VECT-D0AD
82 Hz Maximum	NNAX	20B-VECTB-D0AX
Cascading Fan/Pump Control	NNAE	20B-VECT-D0AE
Pump Off (for Pump Jack)	NNBA	20B-VECT-D0BA

(1) Vector Control option utilizes DPI Only.

(2) This code is entered at the end of the drive catalog number (positions 17…20).

(3) This code is entered at position 15 of the drive catalog number.

Internal Dynamic Brake Resistor Kits

These resistors have a limited duty cycle. Refer to the PowerFlex Dynamic Braking Selection Guide to determine if an internal resistor will be sufficient for your application. An external resistor may be required.

Drive Input Voltage	Brake Resistance Ohms	Frame	Cat. No.
208…240V AC	62	0	20BB-DB1-0
	62	1 (except 7.5 Hp)	20BB-DB1-1
	22	1 (7.5 Hp)	20BB-DB2-1
	22	2	20BB-DB1-2
380…600V AC	115	0	20BD-DB1-0
	115	1	20BD-DB1-1
	68	2	20BD-DB1-2

Terminators

Description (1)	Cat. No.
for use with 3.7 kW (5 Hp) & below drives	1204-TFA1
for use with 1.5 kW (2 Hp) & up drives	1204-TFB2

(1) Refer to Appendix A of the Wiring and Grounding Guidelines for Pulse Width Modulated (PWM) AC Drives, publication Drives-IN001 for selection information.

Reflected Wave Reduction Modules w/Common Mode Choke

Description (1)	Cat. No.
17A with Common Mode Choke	1204-RWC-17-A

(1) Refer to Appendix A of the Wiring and Grounding Guidelines for Pulse Width Modulated (PWM) AC Drives, publication Drives-IN001 for selection information.

Isolation Transformers

For installations that have specific types of AC supply configurations or require drive protection due to AC line disturbances, isolation transformers are available.

IP32 (NEMA/UL Type 3R)

Motor Rating kW (Hp)	240V, 60 Hz, Three-Phase, 240V Primary & 240V Secondary	460V, 60 Hz, Three-Phase, 460V Primary & 460V Secondary	575V, 60 Hz, Three-Phase, 575V Primary & 575V Secondary
	Cat. No.	Cat. No.	Cat. No.
0.25 (0.33)	1321-3TW005-AA	1321-3TW005-BB	–
0.37 (0.5)	1321-3TW005-AA	1321-3TW005-BB	–
0.55 (0.75)	1321-3TW005-AA	1321-3TW005-BB	–
0.75 (1.0)	1321-3TW005-AA	1321-3TW005-BB	1321-3TW005-CC
1.1 (1.5)	1321-3TW005-AA	1321-3TW005-BB	–
1.5 (2.0)	1321-3TW005-AA	1321-3TW005-BB	1321-3TW005-CC
2.2 (3.0)	1321-3TW005-AA	1321-3TW005-BB	1321-3TW005-CC
4.0 (5.0)	1321-3TW007-AA	1321-3TW007-BB	1321-3TW007-CC
5.5 (7.5)	1321-3TW011-AA	1321-3TW011-BB	1321-3TW011-CC
7.5 (10)	1321-3TW014-AA	1321-3TW014-BB	1321-3TW014-CC
11 (15)	1321-3TW020-AA	1321-3TW020-BB	1321-3TW020-CC
15 (20)	1321-3TW027-AA	1321-3TW027-BB	1321-3TW027-CC
18.5 (25)	1321-3TW034-AA	1321-3TW034-BB	1321-3TW034-CC
22 (30)	1321-3TW040-AA	1321-3TW040-BB	1321-3TW040-CC
30 (40)	1321-3TW051-AA	1321-3TW051-BB	1321-3TW051-CC
37 (50)	1321-3TH063-AA	1321-3TH063-BB	1321-3TH063-CC
45 (60)	1321-3TH075-AA	1321-3TH075-BB	1321-3TH075-CC
55 (75)	1321-3TH093-AA	1321-3TH093-BB	1321-3TH093-CC
75 (100)	–	1321-3TH118-BB	1321-3TH118-CC
90 (125)	–	1321-3TH145-BB	1321-3TH145-CC
110 (150)	–	1321-3TH175-BB	1321-3TH175-CC
149 (200)	–	1321-3TH220-BB	1321-3TH220-CC
187 (250)	–	1321-3TH275-BB	1321-3TH275-CC
224 (300)	–	1321-3TH330-BB	1321-3TH330-CC
261 (350)	–	1321-3TH440-BB	1321-3TH440-CC
298 (400)	–	1321-3TH440-BB	1321-3TH440-CC
336 (450)	–	1321-3TH550-BB	1321-3TH550-CC
373 (500)	–	1321-3TH550-BB	1321-3TH550-CC
448 (600)	–	1321-3TH660-BB	1321-3TH660-CC
485 (650)	–	–	1321-3TH770-CC
522 (700)	–	1321-3TH770-BB	1321-3TH770-CC

Input/Output Line Reactors

For impedance matching, protection from AC line disturbances or motor protection, reactors are available for both the input and output sides of the drive.

240V, 60 Hz, Three-Phase, 3% Impedance

			Input Line Reactor[1]		Output Line Reactor[1]	
			IP00 (Open Style)	IP11 (NEMA/UL Type 1)	IP00 (Open Style)	IP11 (NEMA/UL Type 1)
Drive Cat. No.	Duty	Hp	Cat. No.	Cat. No.	Cat. No.	Cat. No.
20BB2P2	Heavy Duty	0.33	1321-3R2-D	1321-3RA2-D	1321-3R2-D	1321-3RA2-D
20BB2P2	Normal Duty	0.5	1321-3R2-D	1321-3RA2-D	1321-3R2-D	1321-3RA2-D
20BB4P2	Heavy Duty	0.75	1321-3R4-A	1321-3RA4-A	1321-3R4-A	1321-3RA4-A
20BB4P2	Normal Duty	1	1321-3R4-A	1321-3RA4-A	1321-3R4-A	1321-3RA4-A
20BB6P8	Heavy Duty	1.5	1321-3R8-B	1321-3RA8-B	1321-3R8-A	1321-3RA8-A
20BB6P8	Normal Duty	2	1321-3R8-A	1321-3RA8-A	1321-3R8-A	1321-3RA8-A
20BB9P6	Heavy Duty	2	1321-3R8-A	1321-3RA8-A	1321-3R12-A	1321-3RA12-A
20BB9P6	Normal Duty	3	1321-3R12-A	1321-3RA12-A	1321-3R12-A	1321-3RA12-A
20BB015	Heavy Duty	3	1321-3R12-A	1321-3RA12-A	1321-3R18-A	1321-3RA18-A
20BB015	Normal Duty	5	1321-3R18-A	1321-3RA18-A	1321-3R18-A	1321-3RA18-A
20BB022	Heavy Duty	5	1321-3R18-A	1321-3RA18-A	1321-3R25-A	1321-3RA25-A
20BB022	Normal Duty	7.5	1321-3R25-A	1321-3RA25-A	1321-3R25-A	1321-3RA25-A
20BB028	Heavy Duty	7.5	1321-3R25-A	1321-3RA25-A	1321-3R35-A	1321-3RA35-A
20BB028	Normal Duty	10	1321-3R35-A	1321-3RA35-A	1321-3R35-A	1321-3RA35-A
20BB042	Heavy Duty	10	1321-3R35-A	1321-3RA35-A	1321-3R45-A	1321-3RA45-A
20BB042	Normal Duty	15	1321-3R45-A	1321-3RA45-A	1321-3R45-A	1321-3RA45-A
20BB052	Heavy Duty	15	1321-3R45-A	1321-3RA45-A	1321-3R55-A	1321-3RA55-A
20BB052	Normal Duty	20	1321-3R55-A	1321-3RA55-A	1321-3R55-A	1321-3RA55-A
20BB070	Heavy Duty	20	1321-3R55-A	1321-3RA55-A	1321-3R80-A	1321-3RA80-A
20BB070	Normal Duty	25	1321-3R80-A	1321-3RA80-A	1321-3R80-A	1321-3RA80-A
20BB080	Heavy Duty	25	1321-3R80-A	1321-3RA80-A	1321-3R80-A	1321-3RA80-A
20BB080	Normal Duty	30	1321-3R80-A	1321-3RA80-A	1321-3R80-A	1321-3RA80-A
20BB104	Heavy Duty	30	1321-3R80-A	1321-3RA80-A	1321-3R80-A	1321-3RA80-A
20BB104	Normal Duty	40	1321-3R100-A	1321-3RA100-A	1321-3R100-A	1321-3RA100-A
20BB130	Heavy Duty	40	1321-3R100-A	1321-3RA100-A	1321-3R100-A	1321-3RA100-A
20BB130	Normal Duty	50	1321-3R130-A	1321-3RA130-A	1321-3R130-A	1321-3RA130-A
20BB154	Heavy Duty	50	1321-3R130-A	1321-3RA130-A	1321-3R130-A	1321-3RA130-A
20BB154	Normal Duty	60	1321-3R160-A	1321-3RA160-A	1321-3R160-A	1321-3RA160-A
20BB192	Heavy Duty	60	1321-3R160-A	1321-3RA160-A	1321-3R160-A	1321-3RA160-A
20BB192	Normal Duty	75	1321-3R200-A	1321-3RA200-A	1321-3R200-A	1321-3RA200-A
20BB260	Heavy Duty	75	1321-3R200-A	1321-3RA200-A	1321-3R200-A	1321-3RA200-A
20BB260	Normal Duty	100	1321-3RB250-A	1321-3RAB250-A	1321-3RB250-A	1321-3RAB250-A

(1) Input line reactors were sized based on the NEC fundamental motor amps. Output line reactors were sized based on the VFD rated output currents.

240V, 60 Hz, Three-Phase, 5% Impedance

			Input Line Reactor[1]		Output Line Reactor[1]	
			IP00 (Open Style)	IP11 (NEMA/UL Type 1)	IP00 (Open Style)	IP11 (NEMA/UL Type 1)
Drive Cat. No.	Duty	Hp	Cat. No.	Cat. No.	Cat. No.	Cat. No.
20BB2P2	Heavy Duty	0.33	1321-3R2-A	1321-3RA2-A	1321-3R2-A	1321-3RA2-A
20BB2P2	Normal Duty	0.5	1321-3R2-A	1321-3RA2-A	1321-3R2-A	1321-3RA2-A
20BB4P2	Heavy Duty	0.75	1321-3R4-B	1321-3RA4-B	1321-3R4-B	1321-3RA4-B
20BB4P2	Normal Duty	1	1321-3R4-B	1321-3RA4-B	1321-3R4-B	1321-3RA4-B
20BB6P8	Heavy Duty	1.5	1321-3R8-B	1321-3RA8-B	1321-3R8-B	1321-3RA8-B
20BB6P8	Normal Duty	2	1321-3R8-B	1321-3RA8-B	1321-3R8-B	1321-3RA8-B
20BB9P6	Heavy Duty	2	1321-3R8-B	1321-3RA8-B	1321-3R12-B	1321-3RA12-B
20BB9P6	Normal Duty	3	1321-3R12-B	1321-3RA12-B	1321-3R12-B	1321-3RA12-B
20BB015	Heavy Duty	3	1321-3R12-B	1321-3RA12-B	1321-3R18-B	1321-3RA18-B
20BB015	Normal Duty	5	1321-3R18-B	1321-3RA18-B	1321-3R18-B	1321-3RA18-B
20BB022	Heavy Duty	5	1321-3R18-B	1321-3RA18-B	1321-3R25-B	1321-3RA25-B
20BB022	Normal Duty	7.5	1321-3R25-B	1321-3RA25-B	1321-3R25-B	1321-3RA25-B
20BB028	Heavy Duty	7.5	1321-3R25-B	1321-3RA25-B	1321-3R35-B	1321-3RA35-B
20BB028	Normal Duty	10	1321-3R35-B	1321-3RA35-B	1321-3R35-B	1321-3RA35-B
20BB042	Heavy Duty	10	1321-3R35-B	1321-3RA35-B	1321-3R45-B	1321-3RA45-B
20BB042	Normal Duty	15	1321-3R45-B	1321-3RA45-B	1321-3R45-B	1321-3RA45-B
20BB052	Heavy Duty	15	1321-3R45-B	1321-3RA45-B	1321-3R55-B	1321-3RA55-B
20BB052	Normal Duty	20	1321-3R55-B	1321-3RA55-B	1321-3R55-B	1321-3RA55-B
20BB070	Heavy Duty	20	1321-3R55-B	1321-3RA55-B	1321-3R80-B	1321-3RA80-B
20BB070	Normal Duty	25	1321-3R80-B	1321-3RA80-B	1321-3R80-B	1321-3RA80-B
20BB080	Heavy Duty	25	1321-3R80-B	1321-3RA80-B	1321-3R80-B	1321-3RA80-B
20BB080	Normal Duty	30	1321-3R80-B	1321-3RA80-B	1321-3R80-B	1321-3RA80-B
20BB104	Heavy Duty	30	1321-3R80-B	1321-3RA80-B	1321-3R80-B	1321-3RA80-B
20BB104	Normal Duty	40	1321-3R100-B	1321-3RA100-B	1321-3R100-B	1321-3RA100-B
20BB130	Heavy Duty	40	1321-3R100-B	1321-3RA100-B	1321-3R100-B	1321-3RA100-B
20BB130	Normal Duty	50	1321-3R130-B	1321-3RA130-B	1321-3R130-B	1321-3RA130-B
20BB154	Heavy Duty	50	1321-3R130-B	1321-3RA130-B	1321-3R130-B	1321-3RA130-B
20BB154	Normal Duty	60	1321-3R160-B	1321-3RA160-B	1321-3R160-B	1321-3RA160-B
20BB192	Heavy Duty	60	1321-3R160-B	1321-3RA160-B	1321-3R160-B	1321-3RA160-B
20BB192	Normal Duty	75	1321-3R200-B	1321-3RA200-B	1321-3R200-B	1321-3RA200-B
20BB260	Heavy Duty	75	1321-3R200-B	1321-3RA200-B	1321-3R200-B	1321-3RA200-B
20BB260	Normal Duty	100	1321-3RB250-B	1321-3RAB250-B	1321-3RB250-B	1321-3RAB250-B

(1) Input line reactors were sized based on the NEC fundamental motor amps. Output line reactors were sized based on the VFD rated output currents.

480V, 60 Hz, Three-Phase, 3% Impedance

			Input Line Reactor[1]		Output Line Reactor[1]	
			IP00 (Open Style)	IP11 (NEMA/UL Type 1)	IP00 (Open Style)	IP11 (NEMA/UL Type 1)
Drive Cat. No.	Duty	Hp	Cat. No.	Cat. No.	Cat. No.	Cat. No.
20BD1P1	Heavy Duty	0.33	1321-3R1-C	1321-3RA1-C	1321-3R2-B	1321-3RA2-B
20BD1P1	Normal Duty	0.5	1321-3R1-C	1321-3RA1-C	1321-3R2-B	1321-3RA2-B
20BD2P1	Heavy Duty	0.75	1321-3R2-A	1321-3RA2-A	1321-3R2-A	1321-3RA2-A
20BD2P1	Normal Duty	1	1321-3R2-A	1321-3RA2-A	1321-3R2-A	1321-3RA2-A
20BD3P4	Heavy Duty	1.5	1321-3R4-C	1321-3RA4-C	1321-3R4-B	1321-3RA4-B
20BD3P4	Normal Duty	2	1321-3R4-B	1321-3RA4-B	1321-3R4-B	1321-3RA4-B
20BD5P0	Heavy Duty	2	1321-3R4-B	1321-3RA4-B	1321-3R8-C	1321-3RA8-C
20BD5P0	Normal Duty	3	1321-3R8-C	1321-3RA8-C	1321-3R8-C	1321-3RA8-C
20BD8P0	Heavy Duty	3	1321-3R8-C	1321-3RA8-C	1321-3R8-B	1321-3RA8-B
20BD8P0	Normal Duty	5	1321-3R8-B	1321-3RA8-B	1321-3R8-B	1321-3RA8-B
20BD011	Heavy Duty	5	1321-3R8-B	1321-3RA8-B	1321-3R12-B	1321-3RA12-B
20BD011	Normal Duty	7.5	1321-3R12-B	1321-3RA12-B	1321-3R12-B	1321-3RA12-B
20BD014	Heavy Duty	7.5	1321-3R12-B	1321-3RA12-B	1321-3R18-B	1321-3RA18-B
20BD014	Normal Duty	10	1321-3R18-B	1321-3RA18-B	1321-3R18-B	1321-3RA18-B
20BD022	Heavy Duty	10	1321-3R18-B	1321-3RA18-B	1321-3R25-B	1321-3RA25-B
20BD022	Normal Duty	15	1321-3R25-B	1321-3RA25-B	1321-3R25-B	1321-3RA25-B
20BD027	Heavy Duty	15	1321-3R25-B	1321-3RA25-B	1321-3R25-B	1321-3RA25-B
20BD027	Normal Duty	20	1321-3R35-B	1321-3RA35-B	1321-3R25-B	1321-3RA25-B
20BD034	Heavy Duty	20	1321-3R35-B	1321-3RA35-B	1321-3R35-B	1321-3RA35-B
20BD034	Normal Duty	25	1321-3R35-B	1321-3RA35-B	1321-3R35-B	1321-3RA35-B
20BD040	Heavy Duty	25	1321-3R35-B	1321-3RA35-B	1321-3R45-B	1321-3RA45-B
20BD040	Normal Duty	30	1321-3R45-B	1321-3RA45-B	1321-3R45-B	1321-3RA45-B
20BD052	Heavy Duty	30	1321-3R45-B	1321-3RA45-B	1321-3R55-B	1321-3RA55-B
20BD052	Normal Duty	40	1321-3R55-B	1321-3RA55-B	1321-3R55-B	1321-3RA55-B
20BD065	Heavy Duty	40	1321-3R55-B	1321-3RA55-B	1321-3R80-B	1321-3RA80-B
20BD065	Normal Duty	50	1321-3R80-B	1321-3RA80-B	1321-3R80-B	1321-3RA80-B
20BD077	Heavy Duty	50	1321-3R80-B	1321-3RA80-B	1321-3R80-B	1321-3RA80-B
20BD077	Normal Duty	60	1321-3R80-B	1321-3RA80-B	1321-3R80-B	1321-3RA80-B
20BD096	Heavy Duty	60	1321-3R80-B	1321-3RA80-B	1321-3R80-B	1321-3RA80-B
20BD096	Normal Duty	75	1321-3R100-B	1321-3RA100-B	1321-3R100-B	1321-3RA100-B
20BD125	Heavy Duty	75	1321-3R100-B	1321-3RA100-B	1321-3R100-B	1321-3RA100-B
20BD125	Normal Duty	100	1321-3R130-B	1321-3RA130-B	1321-3R130-B	1321-3RA130-B
20BD156	Heavy Duty	100	1321-3R130-B	1321-3RA130-B	1321-3R130-B	1321-3RA130-B
20BD156	Normal Duty	125	1321-3R160-B	1321-3RA160-B	1321-3R160-B	1321-3RA160-B
20BD180	Heavy Duty	125	1321-3R160-B	1321-3RA160-B	1321-3R160-B	1321-3RA160-B
20BD180	Normal Duty	150	1321-3R200-B	1321-3RA200-B	1321-3R200-C	1321-3RA200-C

continued

			Input Line Reactor[1]		Output Line Reactor[1]	
			IP00 (Open Style)	IP11 (NEMA/UL Type 1)	IP00 (Open Style)	IP11 (NEMA/UL Type 1)
Drive Cat. No.	Duty	Hp	Cat. No.	Cat. No.	Cat. No.	Cat. No.
20BD248	Heavy Duty	150	1321-3R200-B	1321-3RA200-B	1321-3R200-C	1321-3RA200-C
20BD248	Normal Duty	200	1321-3RB250-B	1321-3RAB250-B	1321-3RB250-B	1321-3RAB250-B
20BD292	Heavy Duty	200	1321-3RB250-B	1321-3RAB250-B	1321-3RB250-B	1321-3RAB250-B
20BD292	Normal Duty	250	1321-3RB320-B	1321-3RAB320-B	1321-3RB320-B	1321-3RAB320-B
20BD325	Heavy Duty	250	1321-3RB320-B	1321-3RAB320-B	1321-3RB320-B	1321-3RAB320-B
20BD325	Normal Duty	250	1321-3RB320-B	1321-3RAB320-B	1321-3RB320-B	1321-3RAB320-B
20BD365	Heavy Duty	250	1321-3RB320-B	1321-3RAB320-B	1321-3RB320-B	1321-3RAB320-B
20BD365	Normal Duty	300	1321-3RB400-B	1321-3RAB400-B	1321-3RB400-B	1321-3RAB400-B
20BD415	Heavy Duty	300	1321-3RB400-B	1321-3RAB400-B	1321-3RB400-B	1321-3RAB400-B
20BD415	Normal Duty	350	1321-3RB400-B	1321-3RAB400-B	1321-3RB400-B	1321-3RAB400-B
20BD481	Heavy Duty	350	1321-3RB400-B	1321-3RAB400-B	1321-3RB400-B	1321-3RAB400-B
20BD481	Normal Duty	400	1321-3R500-B	1321-3RA500-B	1321-3R500-B	1321-3RA500-B
20BD535	Heavy Duty	400	1321-3R500-B	1321-3RA500-B	1321-3R500-B	1321-3RA500-B
20BD535	Normal Duty	450	1321-3R500-B	1321-3RA500-B	1321-3R500-B	1321-3RA500-B
20BD600	Heavy Duty	450	1321-3R500-B	1321-3RA500-B	1321-3R500-B	1321-3RA500-B
20BD600	Normal Duty	500	1321-3R600-B	1321-3RA600-B	1321-3R600-B	1321-3RA600-B
20BD730	Heavy Duty	500	1321-3R600-B	1321-3RA600-B	1321-3R600-B	1321-3RA600-B
20BD730	Normal Duty	600	1321-3R750-B	1321-3RA750-B	1321-3R750-B	1321-3RA750-B
20BD875	Heavy Duty	600	1321-3R750-B	1321-3RA750-B	1321-3R600-B	1321-3RA600-B
20BD875	Normal Duty	700	1321-3R850-B	1321-3RA850-B	1321-3R850-B	1321-3RA850-B

(1) Input line reactors were sized based on the NEC fundamental motor amps. Output line reactors were sized based on the VFD rated output currents.

480V, 60 Hz, Three-Phase, 5% Impedance

			Input Line Reactor[1]		Output Line Reactor[1]	
			IP00 (Open Style)	IP11 (NEMA/UL Type 1)	IP00 (Open Style)	IP11 (NEMA/UL Type 1)
Drive Cat. No.	Duty	Hp	Cat. No.	Cat. No.	Cat. No.	Cat. No.
20BD1P1	Heavy Duty	0.33	1321-3R1-B	1321-3RA1-B	1321-3R2-C	1321-3RA2-C
20BD1P1	Normal Duty	0.5	1321-3R1-B	1321-3RA1-B	1321-3R2-C	1321-3RA2-C
20BD2P1	Heavy Duty	0.75	1321-3R2-C	1321-3RA2-C	1321-3R2-B	1321-3RA2-B
20BD2P1	Normal Duty	1	1321-3R2-B	1321-3RA2-B	1321-3R2-B	1321-3RA2-B
20BD3P4	Heavy Duty	1.5	1321-3R4-D	1321-3RA4-D	1321-3R4-D	1321-3RA4-D
20BD3P4	Normal Duty	2	1321-3R4-D	1321-3RA4-D	1321-3R4-D	1321-3RA4-D
20BD5P0	Heavy Duty	2	1321-3R4-D	1321-3RA4-D	1321-3R8-D	1321-3RA8-D
20BD5P0	Normal Duty	3	1321-3R8-D	1321-3RA8-D	1321-3R8-D	1321-3RA8-D
20BD8P0	Heavy Duty	3	1321-3R8-D	1321-3RA8-D	1321-3R8-C	1321-3RA8-C
20BD8P0	Normal Duty	5	1321-3R8-C	1321-3RA8-C	1321-3R8-C	1321-3RA8-C
20BD011	Heavy Duty	5	1321-3R8-C	1321-3RA8-C	1321-3R12-C	1321-3RA12-C
20BD011	Normal Duty	7.5	1321-3R12-C	1321-3RA12-C	1321-3R12-C	1321-3RA12-C
20BD014	Heavy Duty	7.5	1321-3R12-C	1321-3RA12-C	1321-3R18-C	1321-3RA18-C
20BD014	Normal Duty	10	1321-3R18-C	1321-3RA18-C	1321-3R18-C	1321-3RA18-C
20BD022	Heavy Duty	10	1321-3R18-C	1321-3RA18-C	1321-3R25-C	1321-3RA25-C
20BD022	Normal Duty	15	1321-3R25-C	1321-3RA25-C	1321-3R25-C	1321-3RA25-C
20BD027	Heavy Duty	15	1321-3R25-C	1321-3RA25-C	1321-3R25-C	1321-3RA25-C
20BD027	Normal Duty	20	1321-3R35-C[2]	1321-3RA35-C[2]	1321-3R25-C	1321-3RA25-C
20BD034	Heavy Duty	20	1321-3R35-C[2]	1321-3RA35-C[2]	1321-3R35-C	1321-3RA35-C
20BD034	Normal Duty	25	1321-3R35-C	1321-3RA35-C	1321-3R35-C	1321-3RA35-C
20BD040	Heavy Duty	25	1321-3R35-C	1321-3RA35-C	1321-3R45-C	1321-3RA45-C
20BD040	Normal Duty	30	1321-3R45-C	1321-3RA45-C	1321-3R45-C	1321-3RA45-C
20BD052	Heavy Duty	30	1321-3R45-C	1321-3RA45-C	1321-3R55-C	1321-3RA55-C
20BD052	Normal Duty	40	1321-3R55-C	1321-3RA55-C	1321-3R55-C	1321-3RA55-C
20BD065	Heavy Duty	40	1321-3R55-C	1321-3RA55-C	1321-3R80-C	1321-3RA80-C
20BD065	Normal Duty	50	1321-3R80-C	1321-3RA80-C	1321-3R80-C	1321-3RA80-C
20BD077	Heavy Duty	50	1321-3R80-C	1321-3RA80-C	1321-3R80-C	1321-3RA80-C
20BD077	Normal Duty	60	1321-3R80-C	1321-3RA80-C	1321-3R80-C	1321-3RA80-C
20BD096	Heavy Duty	60	1321-3R80-C	1321-3RA80-C	1321-3R80-C	1321-3RA80-C
20BD096	Normal Duty	75	1321-3R100-C	1321-3RA100-C	1321-3R100-C	1321-3RA100-C
20BD125	Heavy Duty	75	1321-3R100-C	1321-3RA100-C	1321-3R100-C	1321-3RA100-C
20BD125	Normal Duty	100	1321-3R130-C	1321-3RA130-C	1321-3R130-C	1321-3RA130-C
20BD156	Heavy Duty	100	1321-3R130-C	1321-3RA130-C	1321-3R130-C	1321-3RA130-C
20BD156	Normal Duty	125	1321-3R160-C	1321-3RA160-C	1321-3R160-C	1321-3RA160-C
20BD180	Heavy Duty	125	1321-3R160-C	1321-3RA160-C	1321-3R160-C	1321-3RA160-C
20BD180	Normal Duty	150	1321-3R200-C	1321-3RA200-C	1321-3R200-C[2]	1321-3RA200-C[2]

continued

Drive Cat. No.	Duty	Hp	Input Line Reactor[1]		Output Line Reactor[1]	
			IP00 (Open Style)	IP11 (NEMA/UL Type 1)	IP00 (Open Style)	IP11 (NEMA/UL Type 1)
			Cat. No.	Cat. No.	Cat. No.	Cat. No.
20BD248	Heavy Duty	150	1321-3R200-C	1321-3RA200-C	1321-3R200-C[2]	1321-3RA200-C[2]
20BD248	Normal Duty	200	1321-3RB250-C	1321-3RAB250-C	1321-3RB250-C	1321-3RAB250-C
20BD292	Heavy Duty	200	1321-3RB250-C	1321-3RAB250-C	1321-3RB250-C	1321-3RAB250-C
20BD292	Normal Duty	250	1321-3RB320-C	1321-3RAB320-C	1321-3RB320-C	1321-3RAB320-C
20BD325	Heavy Duty	250	1321-3RB320-C	1321-3RAB320-C	1321-3RB320-C	1321-3RAB320-C
20BD325	Normal Duty	250	1321-3RB320-C	1321-3RAB320-C	1321-3RB320-C	1321-3RAB320-C
20BD365	Heavy Duty	250	1321-3RB320-C	1321-3RAB320-C	1321-3RB320-C	1321-3RAB320-C
20BD365	Normal Duty	300	1321-3RB400-C	1321-3RAB400-C	1321-3RB400-C	1321-3RAB400-C
20BD415	Heavy Duty	300	1321-3RB400-C	1321-3RAB400-C	1321-3RB400-C	1321-3RAB400-C
20BD415	Normal Duty	350	1321-3R500-C	1321-3RA500-C	1321-3RB400-C	1321-3RAB400-C
20BD481	Heavy Duty	350	1321-3R500-C	1321-3RA500-C	1321-3RB400-C	1321-3RAB400-C
20BD481	Normal Duty	400	1321-3R500-C	1321-3RA500-C	1321-3R500-C	1321-3RA500-C
20BD535	Heavy Duty	400	1321-3R500-C	1321-3RA500-C	1321-3R500-C	1321-3RA500-C
20BD535	Normal Duty	450	1321-3R600-C	1321-3RA600-C	1321-3R500-C	1321-3RA500-C
20BD600	Heavy Duty	450	1321-3R600-C	1321-3RA600-C	1321-3R500-C	1321-3RA500-C
20BD600	Normal Duty	500	1321-3R600-C	1321-3RA600-C	1321-3R600-C	1321-3RA600-C
20BD730	Heavy Duty	500	1321-3R600-C	1321-3RA600-C	1321-3R600-C	1321-3RA600-C
20BD730	Normal Duty	600	1321-3R750-E	1321-3RA750-E	1321-3R750-E	1321-3RA750-E
20BD875	Heavy Duty	600	1321-3R750-E	1321-3RA750-E	1321-3R750-E	1321-3RA750-E
20BD875	Normal Duty	700	1321-3R850-C	1321-3RA850-C	1321-3R850-C	1321-3RA850-C

(1) Input line reactors were sized based on the NEC fundamental motor amps. Output line reactors were sized based on the VFD rated output currents.

(2) 4% impedance.

600V, 60 Hz, Three-Phase, 3% Impedance

			Input Line Reactor[1]		Output Line Reactor[1]	
			IP00 (Open Style)	IP11 (NEMA/UL Type 1)	IP00 (Open Style)	IP11 (NEMA/UL Type 1)
Drive Cat. No.	Duty	Hp	Cat. No.	Cat. No.	Cat. No.	Cat. No.
20BE1P7	Heavy Duty	0.5	1321-3R1-C	1321-3RA1-C	1321-3R2-B	1321-3RA2-B
20BE1P7	Normal Duty	1	1321-3R2-B	1321-3RA2-B	1321-3R2-B	1321-3RA2-B
20BE2P7	Heavy Duty	1	1321-3R2-B	1321-3RA2-B	1321-3R4-D	1321-3RA4-D
20BE2P7	Normal Duty	2	1321-3R4-D	1321-3RA4-D	1321-3R4-D	1321-3RA4-D
20BE3P9	Heavy Duty	2	1321-3R4-D	1321-3RA4-D	1321-3R4-C	1321-3RA4-C
20BE3P9	Normal Duty	3	1321-3R4-C	1321-3RA4-C	1321-3R4-C	1321-3RA4-C
20BE6P1	Heavy Duty	3	1321-3R4-C	1321-3RA4-C	1321-3R8-C	1321-3RA8-C
20BE6P1	Normal Duty	5	1321-3R8-C	1321-3RA8-C	1321-3R8-C	1321-3RA8-C
20BE9P0	Heavy Duty	5	1321-3R8-C	1321-3RA8-C	1321-3R12-C	1321-3RA12-C
20BE9P0	Normal Duty	7.5	1321-3R12-C	1321-3RA12-C	1321-3R12-C	1321-3RA12-C
20BE011	Heavy Duty	7.5	1321-3R12-C	1321-3RA12-C	1321-3R12-B	1321-3RA12-B
20BE011	Normal Duty	10	1321-3R12-B	1321-3RA12-B	1321-3R12-B	1321-3RA12-B
20BE017	Heavy Duty	10	1321-3R12-B	1321-3RA12-B	1321-3R18-B	1321-3RA18-B
20BE017	Normal Duty	15	1321-3R18-B	1321-3RA18-B	1321-3R18-B	1321-3RA18-B
20BE022	Heavy Duty	15	1321-3R18-B	1321-3RA18-B	1321-3R25-B	1321-3RA25-B
20BE022	Normal Duty	20	1321-3R25-B	1321-3RA25-B	1321-3R25-B	1321-3RA25-B
20BE027	Heavy Duty	20	1321-3R25-B	1321-3RA25-B	1321-3R35-C	1321-3RA35-C
20BE027	Normal Duty	25	1321-3R35-C	1321-3RA35-C	1321-3R35-C	1321-3RA35-C
20BE032	Heavy Duty	25	1321-3R35-C	1321-3RA35-C	1321-3R35-B	1321-3RA35-B
20BE032	Normal Duty	30	1321-3R35-B	1321-3RA35-B	1321-3R35-B	1321-3RA35-B
20BE041	Heavy Duty	30	1321-3R35-B	1321-3RA35-B	1321-3R45-B	1321-3RA45-B
20BE041	Normal Duty	40	1321-3R45-B	1321-3RA45-B	1321-3R45-B	1321-3RA45-B
20BE052	Heavy Duty	40	1321-3R45-B	1321-3RA45-B	1321-3R55-B	1321-3RA55-B
20BE052	Normal Duty	50	1321-3R55-B	1321-3RA55-B	1321-3R55-B	1321-3RA55-B
20BE062	Heavy Duty	50	1321-3R55-B	1321-3RA55-B	1321-3R80-B	1321-3RA80-B
20BE062	Normal Duty	60	1321-3R80-B	1321-3RA80-B	1321-3R80-B	1321-3RA80-B
20BE077	Heavy Duty	60	1321-3R80-B	1321-3RA80-B	1321-3R80-B	1321-3RA80-B
20BE077	Normal Duty	75	1321-3R80-B	1321-3RA80-B	1321-3R80-B	1321-3RA80-B
20BE099	Heavy Duty	75	1321-3R80-B	1321-3RA80-B	1321-3R80-B	1321-3RA80-B
20BE099	Normal Duty	100	1321-3R100-B	1321-3RA100-B	1321-3R100-B	1321-3RA100-B
20BE125	Heavy Duty	100	1321-3R100-B	1321-3RA100-B	1321-3R100-B	1321-3RA100-B
20BE125	Normal Duty	125	1321-3R130-B	1321-3RA130-B	1321-3R130-B	1321-3RA130-B
20BE144	Heavy Duty	125	1321-3R130-B	1321-3RA130-B	1321-3R130-B	1321-3RA130-B
20BE144	Normal Duty	150	1321-3R160-B	1321-3RA160-B	1321-3R160-B	1321-3RA160-B

(1) Input line reactors were sized based on the NEC fundamental motor amps. Output line reactors were sized based on the VFD rated output currents.

600V, 60 Hz, Three-Phase, 5% Impedance

			Input Line Reactor[1]		Output Line Reactor[1]	
			IP00 (Open Style)	IP11 (NEMA/UL Type 1)	IP00 (Open Style)	IP11 (NEMA/UL Type 1)
Drive Cat. No.	Duty	Hp	Cat. No.	Cat. No.	Cat. No.	Cat. No.
20BE1P7	Heavy Duty	0.5	1321-3R1-B	1321-3RA1-B	1321-3R2-C	1321-3RA2-C
20BE1P7	Normal Duty	1	1321-3R2-C	1321-3RA2-C	1321-3R2-C	1321-3RA2-C
20BE2P7	Heavy Duty	1	1321-3R2-C	1321-3RA2-C	1321-3R4-D[2]	1321-3RA4-D[2]
20BE2P7	Normal Duty	2	1321-3R4-D[2]	1321-3RA4-D[2]	1321-3R4-D[2]	1321-3RA4-D[2]
20BE3P9	Heavy Duty	2	1321-3R4-D[2]	1321-3RA4-D[2]	1321-3R4-D	1321-3RA4-D
20BE3P9	Normal Duty	3	1321-3R4-D	1321-3RA4-D	1321-3R4-D	1321-3RA4-D
20BE6P1	Heavy Duty	3	1321-3R4-D	1321-3RA4-D	1321-3R8-D	1321-3RA8-D
20BE6P1	Normal Duty	5	1321-3R8-D	1321-3RA8-D	1321-3R8-D	1321-3RA8-D
20BE9P0	Heavy Duty	5	1321-3R8-D	1321-3RA8-D	1321-3R12-C[2]	1321-3RA12-C[2]
20BE9P0	Normal Duty	7.5	1321-3R12-C[2]	1321-3RA12-C[2]	1321-3R12-C[2]	1321-3RA12-C[2]
20BE011	Heavy Duty	7.5	1321-3R12-C[2]	1321-3RA12-C[2]	1321-3R12-C	1321-3RA12-C
20BE011	Normal Duty	10	1321-3R12-C	1321-3RA12-C	1321-3R12-C	1321-3RA12-C
20BE017	Heavy Duty	10	1321-3R12-C	1321-3RA12-C	1321-3R18-C	1321-3RA18-C
20BE017	Normal Duty	15	1321-3R18-C	1321-3RA18-C	1321-3R18-C	1321-3RA18-C
20BE022	Heavy Duty	15	1321-3R18-C	1321-3RA18-C	1321-3R25-C[2]	1321-3RA25-C[2]
20BE022	Normal Duty	20	1321-3R25-C[2]	1321-3RA25-C[2]	1321-3R25-C[2]	1321-3RA25-C[2]
20BE027	Heavy Duty	20	1321-3R25-C[2]	1321-3RA25-C[2]	1321-3R35-C[2]	1321-3RA35-C[2]
20BE027	Normal Duty	25	1321-3R35-C[2]	1321-3RA35-C[2]	1321-3R35-C[2]	1321-3RA35-C[2]
20BE032	Heavy Duty	25	1321-3R35-C[2]	1321-3RA35-C[2]	1321-3R35-C[2]	1321-3RA35-C[2]
20BE032	Normal Duty	30	1321-3R35-C[2]	1321-3RA35-C[2]	1321-3R35-C[2]	1321-3RA35-C[2]
20BE041	Heavy Duty	30	1321-3R35-C[2]	1321-3RA35-C[2]	1321-3R45-C	1321-3RA45-C
20BE041	Normal Duty	40	1321-3R45-C	1321-3RA45-C	1321-3R45-C	1321-3RA45-C
20BE052	Heavy Duty	40	1321-3R45-C	1321-3RA45-C	1321-3R55-C	1321-3RA55-C
20BE052	Normal Duty	50	1321-3R55-C	1321-3RA55-C	1321-3R55-C	1321-3RA55-C
20BE062	Heavy Duty	50	1321-3R55-C	1321-3RA55-C	1321-3R80-C	1321-3RA80-C
20BE062	Normal Duty	60	1321-3R80-C	1321-3RA80-C	1321-3R80-C	1321-3RA80-C
20BE077	Heavy Duty	60	1321-3R80-C	1321-3RA80-C	1321-3R80-C	1321-3RA80-C
20BE077	Normal Duty	75	1321-3R80-C	1321-3RA80-C	1321-3R80-C	1321-3RA80-C
20BE099	Heavy Duty	75	1321-3R80-C	1321-3RA80-C	1321-3R80-C	1321-3RA80-C
20BE099	Normal Duty	100	1321-3R100-C	1321-3RA100-C	1321-3R100-C	1321-3RA100-C
20BE125	Heavy Duty	100	1321-3R100-C	1321-3RA100-C	1321-3R100-C	1321-3RA100-C
20BE125	Normal Duty	125	1321-3R130-C[2]	1321-3RA130-C[2]	1321-3R130-C[2]	1321-3RA130-C[2]
20BE144	Heavy Duty	125	1321-3R130-C[2]	1321-3RA130-C[2]	1321-3R130-C[2]	1321-3RA130-C[2]
20BE144	Normal Duty	150	1321-3R160-C[2]	1321-3RA160-C[2]	1321-3R160-C[2]	1321-3RA160-C[2]

(1) Input line reactors were sized based on the NEC fundamental motor amps. Output line reactors were sized based on the VFD rated output currents.

(2) 4% impedance.

Important User Information

Read this document and the documents listed in the additional resources section about installation, configuration, and operation of this equipment before you install, configure, operate, or maintain this product. Users are required to familiarize themselves with installation and wiring instructions in addition to requirements of all applicable codes, laws, and standards.

Activities including installation, adjustments, putting into service, use, assembly, disassembly, and maintenance are required to be carried out by suitably trained personnel in accordance with applicable code of practice.

If this equipment is used in a manner not specified by the manufacturer, the protection provided by the equipment may be impaired.

In no event will Rockwell Automation, Inc. be responsible or liable for indirect or consequential damages resulting from the use or application of this equipment.

The examples and diagrams in this manual are included solely for illustrative purposes. Because of the many variables and requirements associated with any particular installation, Rockwell Automation, Inc. cannot assume responsibility or liability for actual use based on the examples and diagrams.

No patent liability is assumed by Rockwell Automation, Inc. with respect to use of information, circuits, equipment, or software described in this manual.

Reproduction of the contents of this manual, in whole or in part, without written permission of Rockwell Automation, Inc., is prohibited.

Documentation Feedback

Your comments will help us serve your documentation needs better. If you have any suggestions on how to improve this document, complete this form, publication RA-DU002, available at http://www.rockwellautomation.com/literature/.

Allen-Bradley, Rockwell Software, Rockwell Automation, and LISTEN. THINK. SOLVE are trademarks of Rockwell Automation, Inc.
Trademarks not belonging to Rockwell Automation are property of their respective companies.

Rockwell Otomasyon Ticaret A.Ş., Kar Plaza İş Merkezi E Blok Kat:6 34752 İçerenköy, İstanbul, Tel: +90 (216) 5698400

www.rockwellautomation.com

Power, Control and Information Solutions Headquarters

Americas: Rockwell Automation, 1201 South Second Street, Milwaukee, WI 53204-2496 USA, Tel: (1) 414.382.2000, Fax: (1) 414.382.4444
Europe/Middle East/Africa: Rockwell Automation NV, Pegasus Park, De Kleetlaan 12a, 1831 Diegem, Belgium, Tel: (32) 2 663 0600, Fax: (32) 2 663 0640
Asia Pacific: Rockwell Automation, Level 14, Core F, Cyberport 3, 100 Cyberport Road, Hong Kong, Tel: (852) 2887 4788, Fax: (852) 2508 1846

Publication 20B-TD001H-EN-P - July 2014
Supersedes Publication 20B-TD001G-EN-P - July 2013

Copyright © 2014 Rockwell Automation, Inc. All rights reserved. Printed in the U.S.A.

User Manual

Allen-Bradley

PowerFlex 20-HIM-A6 and 20-HIM-C6S HIM (Human Interface Module)

FRN 1.xxx - 2.xxx

Allen-Bradley • Rockwell Software

Rockwell Automation

Important User Information

Solid-state equipment has operational characteristics differing from those of electromechanical equipment. Safety Guidelines for the Application, Installation and Maintenance of Solid State Controls (publication SGI-1.1 available from your local Rockwell Automation sales office or online at http://www.rockwellautomation.com/literature/) describes some important differences between solid-state equipment and hard-wired electromechanical devices. Because of this difference, and also because of the wide variety of uses for solid-state equipment, all persons responsible for applying this equipment must satisfy themselves that each intended application of this equipment is acceptable.

In no event will Rockwell Automation, Inc. be responsible or liable for indirect or consequential damages resulting from the use or application of this equipment.

The examples and diagrams in this manual are included solely for illustrative purposes. Because of the many variables and requirements associated with any particular installation, Rockwell Automation, Inc. cannot assume responsibility or liability for actual use based on the examples and diagrams.

No patent liability is assumed by Rockwell Automation, Inc. with respect to use of information, circuits, equipment, or software described in this manual.

Reproduction of the contents of this manual, in whole or in part, without written permission of Rockwell Automation, Inc., is prohibited.

Throughout this manual, when necessary, we use notes to make you aware of safety considerations.

	WARNING: Identifies information about practices or circumstances that can cause an explosion in a hazardous environment, which may lead to personal injury or death, property damage, or economic loss.
	ATTENTION: Identifies information about practices or circumstances that can lead to personal injury or death, property damage, or economic loss. Attentions help you identify a hazard, avoid a hazard, and recognize the consequence.
	SHOCK HAZARD: Labels may be on or inside the equipment, for example, a drive or motor, to alert people that dangerous voltage may be present.
	BURN HAZARD: Labels may be on or inside the equipment, for example, a drive or motor, to alert people that surfaces may reach dangerous temperatures.
IMPORTANT	Identifies information that is critical for successful application and understanding of the product.

Allen-Bradley, Rockwell Software, Rockwell Automation, TechConnect, and PowerFlex are trademarks of Rockwell Automation, Inc.

Trademarks not belonging to Rockwell Automation are property of their respective companies.

This manual contains new and updated information.

New and Updated Information

This table contains the changes made to this revision.

Topic	Page
Revised steps in various procedures to add clarity.	Throughout manual

Notes:

Preface

Conventions Used in This Manual 9
Rockwell Automation Support 9
Local Product Support 9
Technical Product Assistance 9
Additional Resources 10

Chapter 1

Getting Started

HIM Types 11
Features 11
Compatible Products 12
Safety Precautions 12

Chapter 2

Installing the HIM

Installing the 20-HIM-A6 HIM 14
In the Drive HIM Bezel 14
Using Drive Port 2 Connection for Hand-Held Operation 16
In a Remote-Mount HIM Bezel (20-HIM-B1) 17
Installing the 20-HIM-C6S HIM 18
Removing the HIM 20

Chapter 3

HIM Components

HIM Keypad 21
Soft Keys 21
Navigation and Number Keys 22
Single-function Keys 23
LCD Display Elements 24
Status Bar 24
Data Area 24
Soft Key Labels 25
Main Screens 26
Status Screen 26
Process Screen 27
Control Screen 28
Folder Screens 29
Fault Display Screen 30

Chapter 4

Using the HIM

Initial HIM Operation on New Drive Powerup 31
Selecting Display Contrast 32
Setting the Date/Time for PowerFlex 750-Series Drives 33
Creating a User-Defined Drive/Peripheral Name 35
Customizing the Process Screen 36
Selecting Multi-Line or Single-Line View 36
Changing Displayed Items, Adding a Scale Factor, or Customizing Text 37
Resetting the Drive/Peripherals 38
Setting Factory Defaults 38
Setting PowerFlex 750-Series Drives/Peripherals to Factory Defaults 38
Setting PowerFlex 7-Class Drives/Peripherals to Factory Defaults 39
Setting Display Flashing for Fault Indication 40
Setting Display Flashing for Alarm Indication 41
Viewing/Editing Drive or Peripheral Parameters 42
Selecting File-Group-Parameter or Linear List View 42
Direct Parameter Access Method 42
Alternate Linear List Access Method 43
Viewing/Clearing Drive Faults or Alarms 44
Viewing Peripheral Diagnostic Items 45
Viewing/Clearing Peripheral Events 46
Checking Drive and Peripheral Firmware Revisions 47
Using the CopyCat Function 48
Creating CopyCat Files 48
Renaming CopyCat Files 49
Deleting CopyCat Files 51
Changing PowerFlex 750-Series Drive Parameter Associations 52
Using Individual Screen Entry Method 52
Using Direct Numeric Entry Method 54
Linking Parameters in PowerFlex 700/700S Drives 55
Establishing a Link 55
Deleting an Established Link 56
Using a Password 57
Setting/Changing the Password 57
Changing Password-protected Drive/Peripheral Parameters 58
Disabling Password Protection 59
Initiating PowerFlex 750-Series Drive Port Verification 60
Conflict Types 60
Resolving ‘Changed’ or ‘Requires Configuration’ Conflicts 61
Resolving ‘Not Functioning’, ‘Not Supported’, or ‘Invalid Duplicate’ Conflicts 61
Changing Language for the Display Text 62
Updating the HIM Firmware or Language 63

Appendix A

Specifications

Communications. 65
Electrical 65
Mechanical 65
Environmental. 65
Regulatory Compliance. 66

Appendix B

HIM Parameters

Parameter List 67

Appendix C

History of Changes

20HIM-UM001C-EN-P, January 2012. 69
20HIM-UM001B-EN-P, October 2010 70
20HIM-UM001A-EN-P, January 2009. 70

Index

Notes:

This manual provides information about the enhanced PowerFlex 20-HIM-A6 and 20-HIM-C6S Human Interface Modules, and using them with PowerFlex 750-Series drives and PowerFlex® 7-Class drives.

Conventions Used in This Manual

The following conventions are used throughout this manual:

- Parameter names are shown in the format **Parameter xx - [*]**. The xx represents the parameter number. The * represents the parameter name—for example **Parameter 01 - [Port Number]**.
- The HIM or drive firmware revision number (FRN) is displayed as FRN *X.xxx*, where '*X*' is the major revision number and '*xxx*' is the minor revision number.

Rockwell Automation Support

Rockwell Automation offers support services worldwide, with over 75 sales and support offices, over 500 authorized distributors, and over 250 authorized systems integrators located through the United States alone. In addition, Rockwell Automation representatives are in every major country in the world.

Local Product Support

Contact your local Rockwell Automation representative for the following:

- Sales and order support
- Product technical training
- Warranty support
- Support service agreements

Technical Product Assistance

For technical assistance, please review the information in Chapter 4, Using the HIM, first. If you still have problems, then access the Allen-Bradley Technical Support website at http://www.ab.com/support/abdrives or contact Rockwell Automation.

Additional Resources

These documents contain additional information concerning related products from Rockwell Automation.

Resource	Description
PowerFlex 750-Series AC Drive Installation Instructions, publication 750-IN001	Information on installing and programming PowerFlex 750-Series AC drives
PowerFlex 750-Series AC Drives Programming Manual, publication 750-PM001	
PowerFlex 750-Series AC Drives Technical Data, publication 750-TD001	
PowerFlex 70 User Manual, publication 20A-UM001	Information on installing and programming PowerFlex 70 standard control and enhanced control drives.
PowerFlex 70/700 Reference Manual, publication PFLEX-RM001	
PowerFlex 70 Enhanced Control and 700 Vector Control Reference Manual, publication PFLEX-RM004	
PowerFlex 700 Series A User Manual, publication 20B-UM001	Information on installing and programming PowerFlex 700 standard control and vector control Series A drives, and PowerFlex 700 vector control Series B drives.
PowerFlex 700 Series B User Manual, publication 20B-UM002	
PowerFlex 70/700 Reference Manual, publication PFLEX-RM001	
PowerFlex 70 Enhanced Control and 700 Vector Control Reference Manual, publication PFLEX-RM004	
PowerFlex 700H Installation Instructions, publication PFLEX-IN006	Information on installing and programming PowerFlex 700H drives.
PowerFlex 700H Programming Manual, publication 20C-PM001	
PowerFlex 700S with Phase I Control Installation Manual (Frames 1…6), publication 20D-IN024	Information on installing and programming PowerFlex 700S drives.
PowerFlex 700S with Phase I Control Installation Manual (Frames 9 and 10), publication PFLEX-IN006	
PowerFlex 700S with Phase I Control User Manual (All Frame Sizes), publication 20D-UM001	
PowerFlex 700S with Phase I Control Reference Manual, publication PFLEX-RM002	
PowerFlex 700S with Phase II Control Installation Manual (Frames 1…6), publication 20D-IN024	
PowerFlex 700S with Phase II Control Installation Manual (Frames 9…14), publication PFLEX-IN006	
PowerFlex 700S with Phase II Control Programming Manual (All Frame Sizes), publication 20D-PM001	
PowerFlex 700S with Phase II Control Reference Manual, publication PFLEX-RM003	
PowerFlex 700L User Manual, publication 20L-UM001	Information on installing and programming PowerFlex 700L Liquid-Cooled AC drives.
PowerFlex Digital DC Drive User Manual, publication 20P-UM001	Information on installing and programming PowerFlex Digital DC drives.

You can view or download publications at http://literature.rockwellautomation.com. To order paper copies of technical documentation, contact your local Allen-Bradley distributor or Rockwell Automation sales representative.

To find your local Rockwell Automation distributor or sales representative, visit http://www.rockwellautomation.com/locations.

For information such as firmware updates or answers to drive-related questions, go to the Drives Service & Support website at http://www.ab.com/support/abdrives and click the Downloads or Knowledgebase link.

Getting Started

The PowerFlex 20-HIM-A6 and 20-HIM-C6S HIMs provide a communication interface to configure and monitor PowerFlex 753 and PowerFlex 755 AC drives and their connected peripherals. These HIMs are also backward compatible with all PowerFlex 7-Class drives, but with limited functionality.

Topic	Page
HIM Types	11
Features	11
Compatible Products	12
Safety Precautions	12

HIM Types

At the time of publication, the following enhanced PowerFlex 7-Class HIMs are available.

HIM Catalog Number	Description
20-HIM-A6 (1)	NEMA Type 1 HIM
20-HIM-C6S (1)	Remote-Mount NEMA Type 4X/12 HIM

(1) Supports English, Portuguese, French, Italian, German, Spanish, and Dutch languages. The HIM firmware can be updated in the field to support other available languages. **Important:** The language selected for download at the Rockwell Automation Web Updates website at http://www.ab.com/support/abdrives/webupdate will replace all other supported languages—except English, which will always remain as the default language.

Features

The enhanced PowerFlex 20-HIM-A6 and 20-HIM-C6S HIMs provide the following benefits over the more basic PowerFlex 7-Class HIMs (catalog numbers 20-HIM-A3, 20-HIM-A5, 20-HIM-C3S, and 20-HIM-C5S):

- Full-numeric keypad with fully-integrated navigation capability to more easily configure and monitor the drive and its connected peripherals.
- Better keypad touch response and improved tactile feel to provide more gratifying, error-free data entry.
- More intuitive access and new menu structures that increase HIM operating efficiency.
- Simplified custom name assignments for drive/peripherals (for example, Pump 1) to reduce required key presses.

- Support for English, and customary European and Asian languages.
- Dynamic soft keys that change functions/names based on screen or data entry mode to reduce keypad keys and simplify HIM operation.
- Customizable drive monitoring items that can be displayed as a list on the process screen or as individual screens.
- New flashing LCD screen to provide enhanced visibility when faults or alarms are detected.

Compatible Products

At the time of publication, the 20-HIM-A6 and 20-HIM-C6S HIMs are compatible with the following products:

- PowerFlex 753 drives
- PowerFlex 755 drives
- PowerFlex 70 drives with standard or enhanced control
- PowerFlex 700 drives with standard or vector control
- PowerFlex 700H drives
- PowerFlex 700S drives with Phase I or Phase II control
- PowerFlex 700L drives with 700 vector control or 700S control
- PowerFlex 700AFE (Active Front End)
- PowerFlex Digital DC drives
- PowerFlex 7000 drives
- SMC™ Flex smart motor controllers
- SMC-50 smart motor controllers

Safety Precautions

Please read the following safety precautions carefully.

ATTENTION: Risk of injury or death exists from machine motion when using the HIM to Start/Stop/Jog or configure the drive.

ATTENTION: Risk of injury or equipment damage exists. Only personnel familiar with drive and power products and the associated machinery should plan or implement the installation, startup, configuration, and subsequent maintenance of the product using the HIM. Failure to comply may result in injury and/or equipment damage.

Installing the HIM

This chapter provides instructions for installing and removing the HIM.

Topic	Page
Installing the 20-HIM-A6 HIM	14
Installing the 20-HIM-C6S HIM	18
Removing the HIM	20

There are two types of enhanced PowerFlex 7-Class HIM:

- NEMA Type 1 (catalog number 20-HIM-A6)
- Remote-mount NEMA Type 4X/12 (catalog number 20-HIM-C6S), which also includes a 1202-C30 interface cable for connection to the drive

20-HIM-A6 HIM

20-HIM-C6S HIM

Installing the 20-HIM-A6 HIM

The 20-HIM-A6 (NEMA Type 1) HIM is normally installed in the HIM bezel (drive Port 1) on the front of the drive. For temporary hand-held operation, the HIM can be plugged into drive Port 2 (near the bottom of the drive control pod for PowerFlex 750-Series drives, or on the bottom of the drive for PowerFlex 7-Class drives) using a 1 m/3.28 ft. long 20-HIM-H10 cable. For applications requiring the HIM to be located remotely, the HIM can be installed in a remote-mount HIM bezel (catalog number 20-HIM-B1) in a suitable location. The 20-HIM-B1 remote-mount HIM bezel includes a 3 m/9.8 ft. long 1202-C30 cable.

In the Drive HIM Bezel

PowerFlex 750-Series IP20, NEMA/UL Open Type Drives

Place the HIM into the drive HIM bezel by inserting it straight back into the top of the bezel and then sliding it down into the base of the bezel onto the mating connector.

TIP The HIM can be installed in the drive HIM bezel with the drive powered or unpowered.

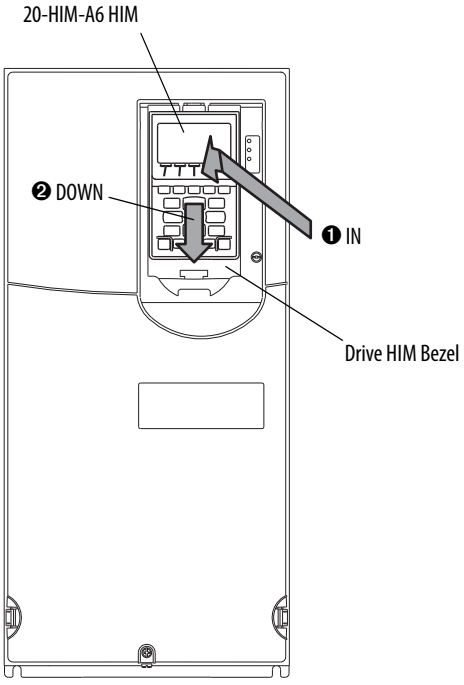

(PowerFlex 755 drive shown)

PowerFlex 750-Series IP54, NEMA/UL Type 12 Drives

1. Unfasten and remove the cover as shown below using the following recommended tools:
   - Screwdriver: 6.4 mm (0.25 in.) flat or T20 Hexalobular
   - Hex socket: 7 mm

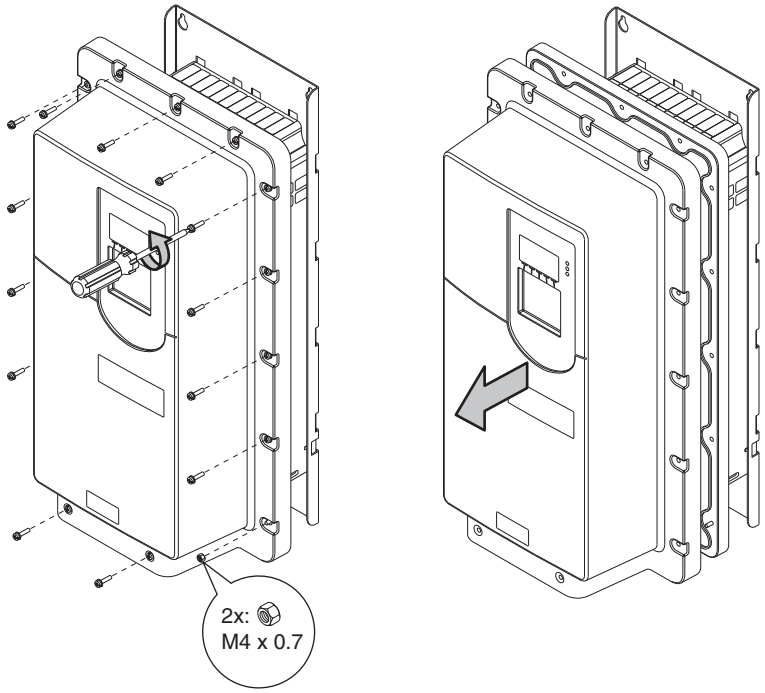

2. Place the HIM into the drive HIM bezel by inserting it straight back into the top of the bezel and then sliding it down into the base of the bezel onto the mating connector as shown on page 14.
3. Replace the cover and the fasteners.
4. Tighten all screws and nuts to the recommended torque of 0.68 N•m (6.0 lb•in).

Using Drive Port 2 Connection for Hand-Held Operation

PowerFlex 750-Series Drive

Attach a 20-HIM-H10 cable to the bottom of the HIM. Then plug the other end of the cable into Port 2 near the bottom of the drive control pod.

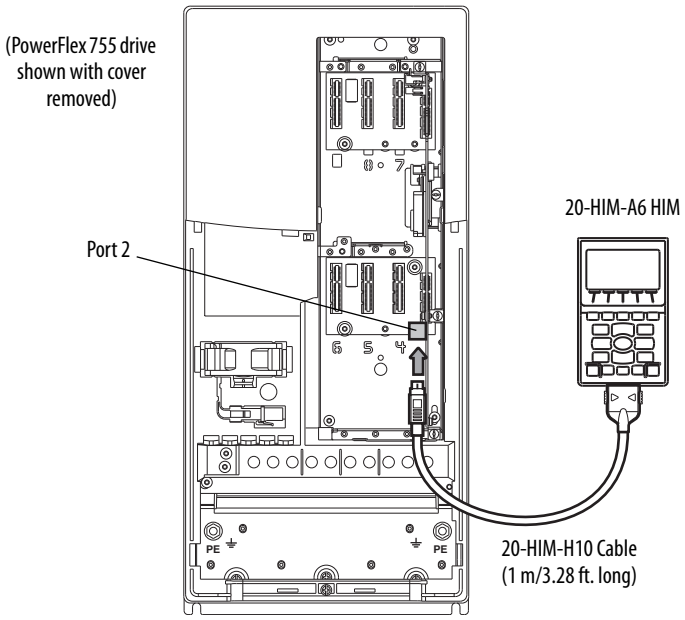

PowerFlex 7-Class Drive

Attach a 20-HIM-H10 cable to the bottom of the HIM. Then plug the other end of the cable into Port 2 on the bottom of the drive.

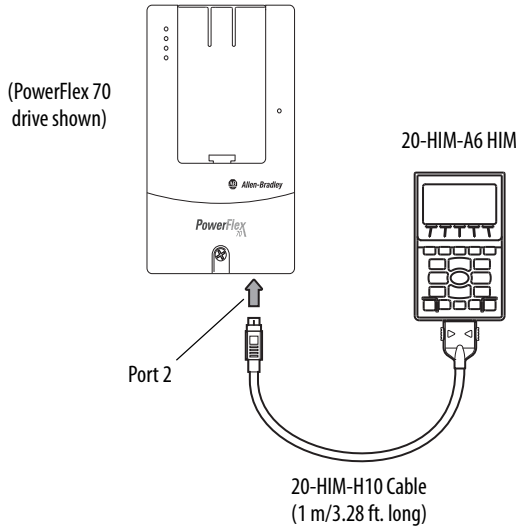

In a Remote-Mount HIM Bezel (20-HIM-B1)

1. If the remote-mount HIM bezel is not mounted, see the HIM Bezel Installation Instructions, publication 20HIM-IN002, for mounting details.
2. Route the 3 m/9.8 ft. long 1202-C30 bezel cable (included with the 20-HIM-B1 remote-mount HIM bezel) to the drive.
3. Connect the bezel cable to the DPI Port 2 on the drive as shown on page 16 for a PowerFlex 750-Series drive or a PowerFlex 7-Class drive.
4. Install the HIM into the remote-mount HIM bezel.

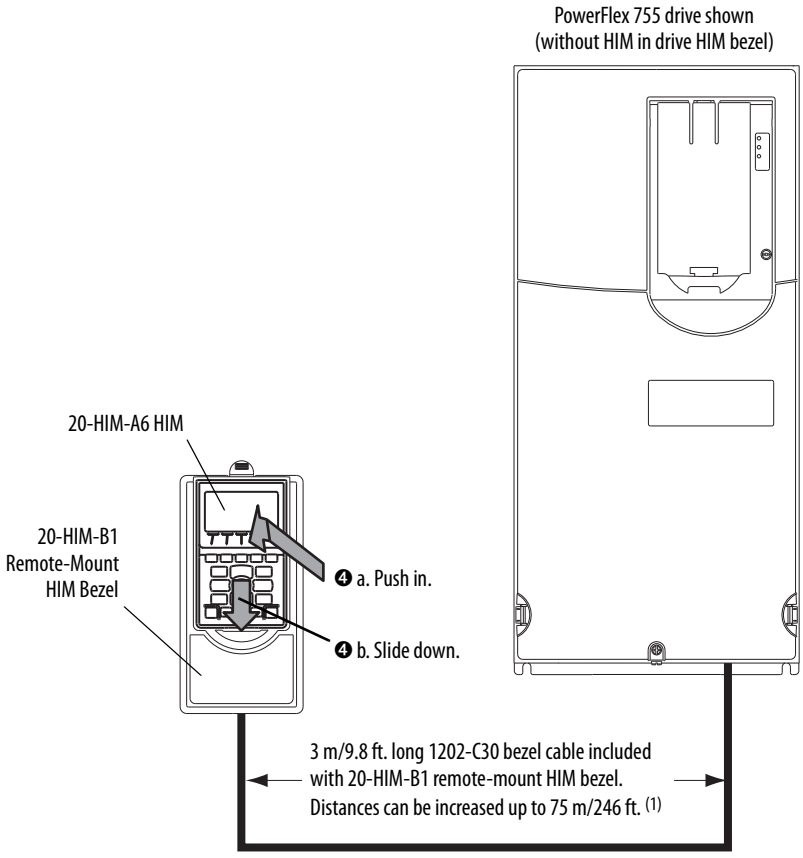

(1) To increase this distance, use one of the following cables:

- 1202-H03 Extension cable (0.3 m/0.98 ft. long)
- 1202-H13 Extension cable (1.0 m/3.28 ft. long)
- 1202-H30 Extension cable (3.0 m/9.8 ft. long)
- 1202-CBL-KIT-100M cable

Note that a cable distance greater than 30 m/98.4 ft. is not CE compliant.

Installing the 20-HIM-C6S HIM

The 20-HIM-C6S (NEMA Type 4X/12) HIM is designed for remote installation and includes a 3 m/9.8 ft. long 1202-C30 cable. See Figure 1 for overall HIM dimensions. Choose an appropriate location to mount the 20-HIM-C6S HIM. The distance between the HIM and drive can be increased up to 75 m/246 ft. by using a 1202-Hxx extension cable or 1202-CBL-KIT-100M cable kit. However, a cable distance greater than 30 m/98.4 ft. is not CE compliant.

Figure 1 - 20-HIM-C6S HIM Dimensions

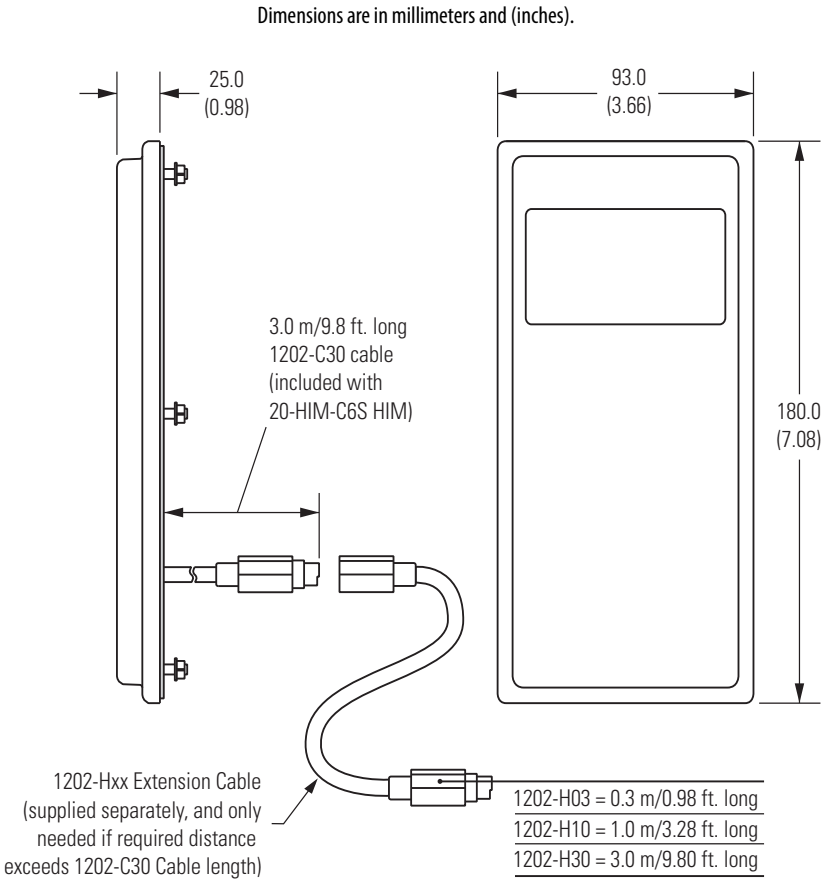

1. Drill the required hole pattern in the panel. See Figure 2 for dimensions.

TIP A conversion template (part number 336745-C01), provided with the 20-HIM-C6S HIM, includes a drilling pattern and mounting instructions to assist with HIM installation.

Figure 2 - Hole Pattern to Mount the 20-HIM-C6S HIM

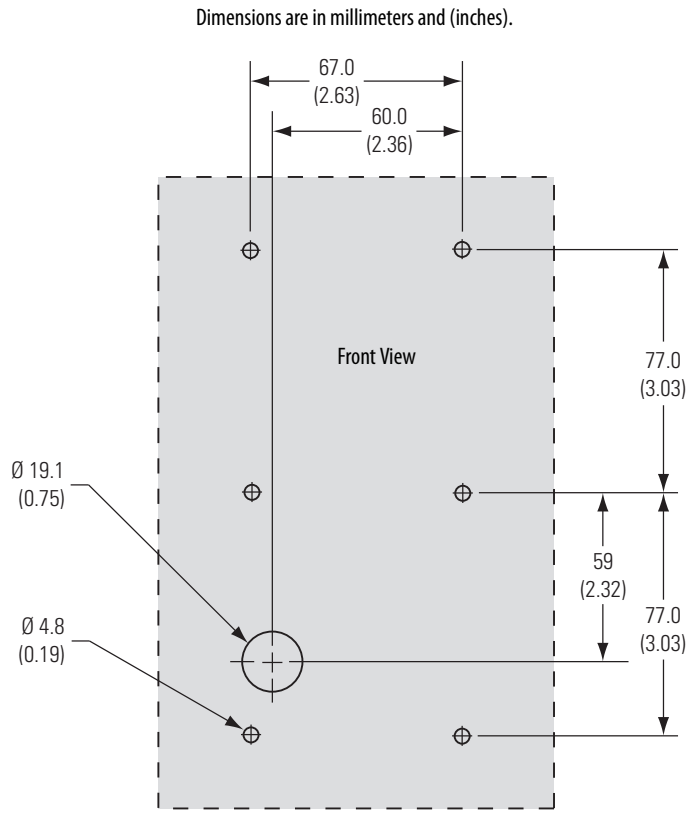

2. Peel the protective film from the gasketed surface on the back of the HIM.

IMPORTANT Adhesive coated gasket is designed for one-time only installation.

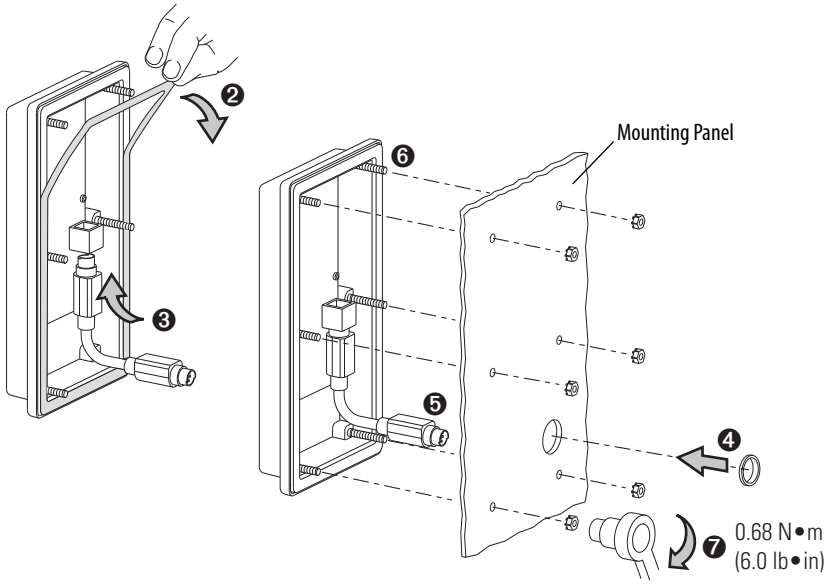

3. Insert the supplied 3 m/9.8 ft. long 1202-C30 HIM cable into the mating socket on the back of the HIM.
4. Install the supplied O-ring into the cable routing hole on the panel to protect the cable.
5. Route the HIM cable through the cable routing hole on the panel.
6. Align the six threaded studs of the HIM with the panel clearance holes, and place the HIM against the panel.
7. Tighten the nuts onto the six threaded studs of the HIM extending behind the panel.

   Recommended torque is 0.68 N•m (6.0 lb•in).
8. Route the HIM cable to the drive.
9. Connect the HIM cable to the DPI Port 2 on the drive as shown on page 16 for a PowerFlex 750-Series drive or a PowerFlex 7-Class drive.

Removing the HIM

ATTENTION: Risk of injury or equipment damage exists. If the HIM cable or remote-mount HIM bezel cable is disconnected from DPI Port 2 on the drive, the drive may fault. Determine how the drive will respond before disconnecting the cable.

IMPORTANT The Host drive can remain powered when removing the HIM. However, a fault will occur if the HIM is not the last controlling device and does not have Manual control of the Host drive. To avoid a fault in this case, access the HIM Control screen (shown on page 28), press the 7 key, and then remove the HIM from the Host drive.

Remove the HIM from the drive HIM bezel or the remote-mount HIM bezel in reverse order of how it was installed.

HIM Components

This chapter describes the components of the HIM.

Topic	Page
HIM Keypad	21
LCD Display Elements	24
Main Screens	26

HIM Keypad

The keypad consists of *soft keys*, navigation and number keys, and single-function keys, which are described in their respective subsections that follow.

Soft Keys

The *soft keys* on the HIM are located at the top of the keypad and highlighted below. Depending on the screen being displayed or the data entry mode being used, a *soft key* name and its function changes. When a dynamic *soft key* (up to a maximum of five keys) is active, its present function and corresponding Soft Key Label (Figure 3) is shown at the bottom of the HIM screen. For a list of possible *soft keys*, their names, and corresponding functions, see Soft Key Labels on page 25.

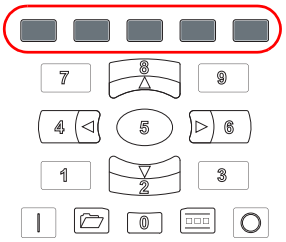

Navigation and Number Keys

The five blue multi-function keys (2, 4, 5, 6, and 8) shown below are used to do the following:

- Enter their respective numeric value
- Scroll menus/screens
- Perform corresponding functions displayed in the Data Area (see page 24)

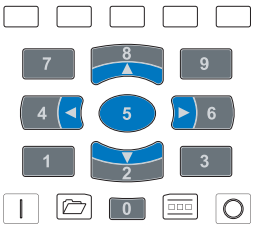

Multi-function Key	Name	Function
	2/Down Arrow	• Enters the numeric value '2'. • Scrolls down to select an item.
	4/Left Arrow	• Enters the numeric value '4'. • Scrolls left to select an item.
	5/Enter	• Enters the numeric value '5'. • Displays the next level of a selected menu item. • Enters new values. • Performs intended actions.
	6/Right Arrow	• Enters the numeric value '6'. • Scrolls right to select an item.
	8/Up Arrow	• Enters the numeric value '8'. • Scrolls up to select an item.

The five gray number keys (0, 1, 3, 7, and 9) are used only to enter their respective numeric value.

Single-function Keys

There are four single-function keys, which are highlighted below and listed in the table below. Each single-function key always performs only its dedicated function.

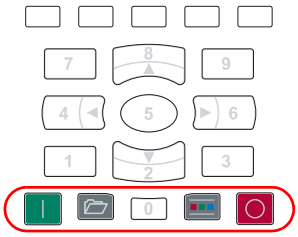

Single-function Key	Name	Function
	Start	Starts the drive.
(1)	Folders	Accesses folders for parameters, diagnostics, memory functions, preferences, and other tasks.
(1)	Controls	Accesses jog, direction, auto/manual, and other control functions.
	Stop	• Stops the drive or clears a fault. • This key is always active. • This key is controlled by drive parameter 307 [Start Stop Mode].

(1) During drive Start Up these keys are temporarily inactive.

LCD Display Elements

The basic HIM screen is divided into three display zones, which are shown in Figure 3 and described in their respective subsections that follow.

Figure 3 - HIM Display Zones

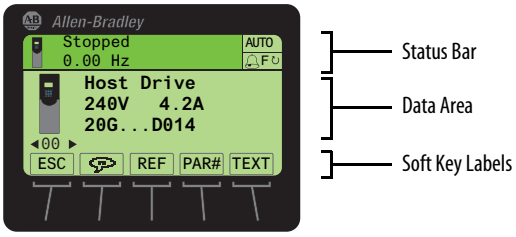

Status Bar

The Status Bar provides operating status information for the host drive.

Status Bar Element		Meaning
	Host Icon	A small image of the connected host drive.
Stopped	Status Text	Indicates present host drive operating status. Text flashes when a fault is present.
0.00 Hz	Feedback	Indicates drive output feedback (for example, Hz, RPM, amps, etc.)
AUTO / MAN	Mode Indication	Indicates Auto or Manual HIM status.
	Alarm Indication	Bell icon indicates that an alarm is present.
F↻ or R↺ (not shown)	Rotation Indication	Indicates Forward or Reverse direction of host drive operation.
DLX (not shown)	DeviceLogix Indication	Indicates when the host drive DeviceLogix feature is enabled.

Data Area

The Data Area displays the data or function presently being acted upon.

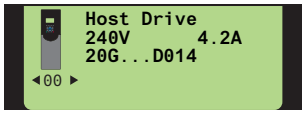

Data Area Element		Meaning
	Host or Device Icon	Image of the host drive or image of the device connected to the port selected.
◀ 00 ▶	Port Selection	Indicates selected port. Use the 4 ◀ or ▶ 6 navigation keys to select a port.
Host Drive	User-Definable Text	Top line of text in the Data Area can be edited by the user.

Soft Key Labels

The Soft Key Labels identify the present function of a corresponding Soft Key on the Key Pad. Different screens may show different Soft Key Labels.

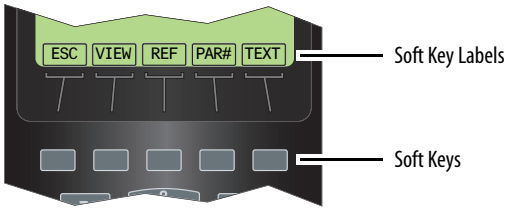

Soft Key Label	Name	Function
.	Decimal Point	Adds decimal point to the right-most position of a numeric value.
←	Backspace	Deletes the character to the left of the cursor.
+ / -	Sign	Changes the sign of a parameter value.
#	Number	Selects the Direct Numeric Entry Method to change PowerFlex 750-Series drive parameter associations.
	Language	Directly accesses the Select Language To Use screen.
▲	Scroll Up	• Scrolls up through display lines. • Increases a value.
▼	Scroll Down	• Scrolls down through display lines. • Decreases a value.
◀	Scroll Left	Scrolls left through display lines.
▶	Scroll Right	Scrolls right through display lines.
ACK	Acknowledge	Acknowledges the fault or alarm on the pop-up screen, stops the backlight from flashing, and keeps the pop-up screen active.
ALL	All	• Clears all faults, alarms or events when a pop-up box appears from a queue screen. • Restores all Host or Port device parameters to factory defaults.
CLR	Clear	• Deletes an entire text string. • Displays the Select Action pop-up box used to clear the selected fault, alarm or event, or the entire fault, alarm or event queue.
DEL	Delete	Deletes a highlighted character.
EDIT	Edit	• Accesses a displayed parameter to edit. • Accesses the Edit Process Display screen.
END	End	• Displays the end (least recent) fault, alarm or event in a queue • Scrolls to the end line of data on the Device Version information screen.
ENTER	Enter	• Displays the next level of a selected menu item. • Enters new values. • Performs the intended action.
ESC	Escape	• Cancels port verification conflict pop-up box during procedure to resolve a conflict. • Cancels the existing screen and returns to the previous screen. • Cancels an entry. • Cancels pop-up Fault Display screen. • Displays the time zone groups list screen (only when the Date/Time Set Edit Mode screen is shown).
EXP	Exponent	Allows data entry using scientific notation for 32-bit REAL (floating point) values.
FIX	Fix	Fixes 'Changed' or 'Requires Configuration' port verification conflicts upon power up.
INFO	Information	• Shows additional information about a selected port verification conflict upon power up. • Shows additional information about Set Default actions.
INS	Insert	Inserts a space to the left of a highlighted character.
LINK	Link	Displays a Link Edit pop-up box to link parameters (only PowerFlex 7-Class drives).
LOWER	Lower	Displays the lower 16 bits (bits 0…15) of a 32-bit Bit-type parameter.

Soft Key Label	Name	Function
MOST	Most	Restores most Host or Port device parameters to factory defaults.
PAR#	Parameter Number	Navigates directly to a parameter.
PGDN	Page Down	Scrolls down to the next page of data lines on the Device Version information screen.
PGUP	Page Up	Scrolls up to the previous page of data lines on the Device Version information screen.
REF	Reference	Enters the speed reference for the Host Drive.
RESET	Reset	Resets the Process screen's displayed monitoring items to the factory default monitoring items listed on page 36.
TEXT	Text	Edits user-definable text for the device selected.
TOP	Top	• Displays the top (most recent) fault, alarm or event in a queue. • Scrolls to the top line of data on the Device Version information screen.
UPPER	Upper	Displays the upper 16 bits (bits 16…31) of a 32-bit Bit-type parameter.
VIEW	View	• Toggles between select screens and views. • Displays the time stamp screen from a fault, alarm or event queue screen.
ZONES	Zones	Displays the Select Time Zone screen.

Main Screens

The HIM main screens include the Status screen, Process screen, Control screen, Folder screens, and Fault Display screens, which are described in their respective subsections that follow.

Status Screen

On power up, the Status screen (Figure 4) is shown by default. Depending on the type of host drive, the Status screen displays the following information.

Displayed Information	Host PowerFlex Drive	
	750-Series	7-Class
Selected device icon and port number	✔	✔
Device name (1)	✔	✔
Rating text (volts, amps)	✔	✔
Drive catalog text	✔	not applicable
Firmware version and hardware series	(2)	✔

(1) The displayed default device name is dependent on the host drive. The device name can be changed, for example, to Host Drive as shown in the screens below. See Creating a User-Defined Drive/Peripheral Name on page 35 for details.

(2) The firmware version and hardware series for a PowerFlex 750-Series drive can be shown using HIM menu screens. For details, see Checking Drive and Peripheral Firmware Revisions on page 47.

Figure 4 - Example Status Screens

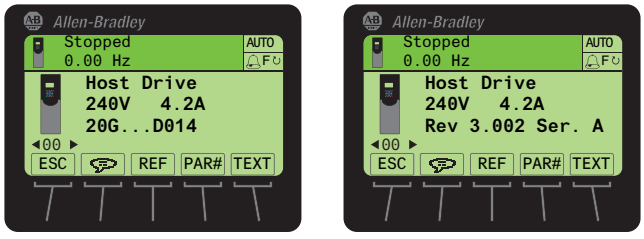

For PowerFlex 750-Series Drive

For PowerFlex 7-Class Drive

Status Screen Soft Keys

Label	Name	Function
ESC	Escape	Toggles between the Status and Process Display screens.
	Language Icon	Directly accesses the Select Language To Use screen.
REF	Reference	Enters the speed reference for the Host Drive.
PAR#	Parameter Number	Directly accesses a parameter for the device on selected port. (This soft key is not available if the device has no parameters.)
TEXT	Text	Edits user-definable text for the device on selected port.

Status Screen Navigation/Number Keys

Key	Name	Function	Screen Element
4	4/Left Arrow	Selects the device on previous port.	◂00 ▸
6	6/Right Arrow	Selects the device on next port.	

If you would rather see the Process screen (shown below) as the initial power-up screen, change the HIM **Parameter 03 - [Initial Screen]** value to '1' (Process Scrn). By default, when the HIM keys are not used for the time period set in **Parameter 07 - [User Dspy Time]**, the screen being displayed at that time will revert back to the initial screen. You can disable this feature by setting **Parameter 06 - [User Dspy Enable]** to '1' (Disable).

Process Screen

To display the Process screen, press the ESC *soft key* on the Status screen (Figure 4). The Process screen shows various drive monitoring parameters. Multi-line and Single-line views can be selected by pressing the VIEW *soft key*. The displayed default monitoring parameters can be changed. See Customizing the Process Screen on page 36 for details.

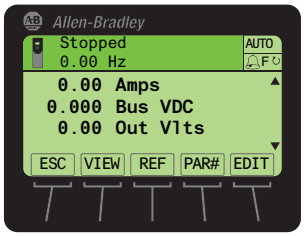

Process Screen Soft Keys

Label	Name	Function
ESC	Escape	Toggles between the Process Display and Status screens.
VIEW	View	Toggles between the multi-line and single-line views.
REF	Reference	Enters the speed reference for the Host Drive.
PAR#	Parameter Number	Directly accesses a parameter for the selected port device.
EDIT	Edit	Directly accesses the Edit Process Display screen.

Process Screen Navigation/Number Keys

Key	Name	Function	Screen Element
8	8/Up Arrow	Scrolls up through the display lines.	▲
2	2/Down Arrow	Scrolls down through the display lines.	▼

Control Screen

The Control screen (shown below) is used to directly control the drive. It displays vertical bar graphs of the drive's speed Reference and Feedback values, and a Key Function Map that corresponds to the navigation/number keys for drive control. Press the (Controls) key to display the Control screen.

IMPORTANT To navigate from the Control screen to another HIM menu screen, you must always press the ESC *soft key* to deactivate the Control screen and display the previous screen.

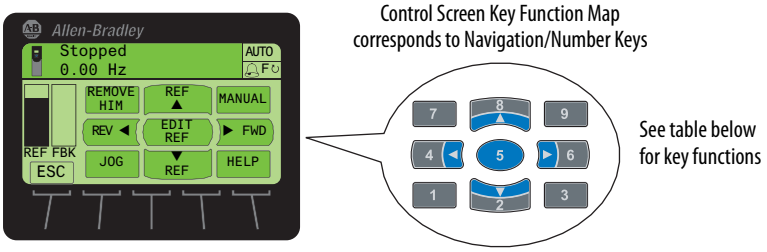

Control Screen Soft Key

Label	Name	Function
ESC	Escape	Deactivates the Control Screen and reverts back to the previous screen.

Control Screen Navigation/Number Keys

Label	Key	Function
JOG	1	Jogs the host drive.
▼ REF	2	Decreases the speed reference for the host drive.
HELP	3	Displays Rockwell Automation Drives Technical Support direct phone number, website address, and email address.
REV ◄	4	Sets the direction to reverse for the host drive.
EDIT REF	5	Allows direct data entry of the speed reference for the host drive.
► FWD	6	Sets the direction to forward for the host drive.
REMOVE HIM	7	Allows HIM removal without causing a fault if the HIM is not the last controlling device. (The REMOVE HIM label is not available when the HIM has manual control of the host drive. In this case, a fault will occur if the HIM is removed.)
REF ▲	8	Increases the speed reference for the host drive.
MANUAL	9	Switches between Auto and Manual modes.

Folder Screens

The drive and each connected peripheral has its own set of Folder screens:

Folder Screen	Description
PORTS	Displays a list of host drive ports to which peripherals are connected. The host drive is always Port 00. An icon appears for the device occupying the selected port.
DEV PARAM	Displays a list of available methods to access the device's parameters.
HOST PARAM (1)	Displays a list of available methods to access the host drive parameters.
DIAGNOSTIC	Displays a list of available diagnostic information items for the device.
MEMORY	Displays a list of available memory storage items for the device.
PROPERTIES	Displays a list of available user-defined convenience functions for the device.
START UP	Displays a list of available host drive start-up routines. This folder is not applicable for peripheral devices and is not shown.

(1) The HOST PARAM folder screen is only available for PowerFlex 750-Series peripherals that support use of Host Drive parameters (for example, the 20-750-DNET DeviceNet network communication option module).

To display the last-viewed Folder screen, press the (Folders) key. The Folder screen Data Area displays:

- Selected device and port number
- Host drive and peripheral folders

Figure 5 - Example Folder Screen (Device Parameters)

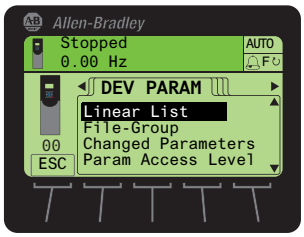

Folder Screen Soft Key

Label	Name	Function
ESC	Escape	Reverts back to the Status or Process Display screen.

Folder Screen Navigation/Number Keys

Key	Name	Function	Screen Element
2	2/Down Arrow	Scrolls down through the folder items.	▼
4	4/Left Arrow	Scrolls to the previous folder.	◀
5	5/Enter	Displays the next level screen for a selected folder item.	Not applicable
6	6/Right Arrow	Scrolls to the next folder.	▶
8	8/Up Arrow	Scrolls up through the folder items.	▲

Fault Display Screen

The pop-up Fault Display screen automatically appears when a fault condition is detected for the host drive or any connected peripheral. The pop-up Fault Display screen flashes to alert that a fault condition exists. The Fault Display screen (example shown below) provides the following information:

- Fault Code number
- Fault description
- Elapsed time (in hh:mm:ss format) from fault detection

The flash mode for the Fault Display screen can be changed. For details, see Setting Display Flashing for Fault Indication on page 40.

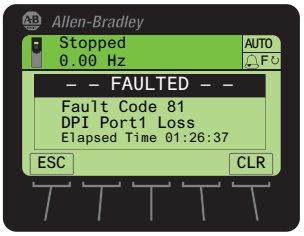

Fault Display Screen Soft Keys

Label	Name	Function
ESC	Escape	Reverts back to the previous screen without clearing the fault.
CLR	Clear	Removes the pop-up Fault Display screen from the display and clears the fault.

Fault Display Screen Single Function Key

Key	Name	Function
	Stop	Removes the pop-up Fault Display screen from the display, clears the fault, and sends a STOP command to the Host drive.

Using the HIM

This chapter provides information about using the HIM.

Topic	Page
Initial HIM Operation on New Drive Powerup	31
Selecting Display Contrast	32
Setting the Date/Time for PowerFlex 750-Series Drives	33
Creating a User-Defined Drive/Peripheral Name	35
Customizing the Process Screen	36
Resetting the Drive/Peripherals	38
Setting Factory Defaults	38
Setting Display Flashing for Fault Indication	40
Setting Display Flashing for Alarm Indication	41
Viewing/Editing Drive or Peripheral Parameters	42
Viewing/Clearing Drive Faults or Alarms	44
Viewing Peripheral Diagnostic Items	45
Viewing/Clearing Peripheral Events	46
Checking Drive and Peripheral Firmware Revisions	47
Using the CopyCat Function	48
Changing PowerFlex 750-Series Drive Parameter Associations	52
Linking Parameters in PowerFlex 700/700S Drives	55
Using a Password	57
Initiating PowerFlex 750-Series Drive Port Verification	60
Changing Language for the Display Text	62
Updating the HIM Firmware or Language	63

For a list of parameters, see Appendix B, HIM Parameters.

Initial HIM Operation on New Drive Powerup

When powering up a new drive for the first time, the HIM runs through an initial operating routine that does the following:

- Prompts you to select a language.
- Initiates a drive start-up routine.
- Initiates a port verification check (only for PowerFlex 750-Series drives). If a port conflict is detected, see page 60 for information to resolve it.

Selecting Display Contrast

The contrast of the HIM display can be adjusted for optimal viewing. Follow these steps to change the contrast.

1. Access the Status screen, which is displayed on HIM power up.

Figure 6 - Status Screen

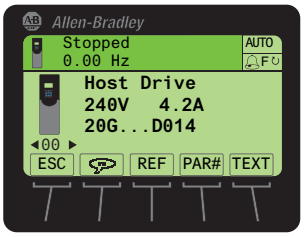

2. Use the 4 or 6 key to scroll to the port to which the HIM is connected.

Port	Location
01	HIM cradle on the front of the drive.
02	DPI port near the bottom of the drive control pod (PowerFlex 750-Series drives) or at the bottom of the drive (PowerFlex 7-Class drives).
03	Splitter cable port when the cable is plugged into the DPI port near the bottom of the drive control pod (PowerFlex 750-Series drives) or at the bottom of the drive (PowerFlex 7-Class drives).

3. Press the key to display its last-viewed folder.
4. Use the 4 or 6 key to scroll to the PROPERTIES folder.
5. Use the 2 or 8 key to select **Adjust Contrast**.
6. Press the 5 (Enter) key to display the Set LCD Contrast edit pop-up box.
7. Use the ▲ or ▼ *soft key* to adjust contrast to the desired setting.
8. Press the ESC *soft key* to set the contrast and exit the screen.

Setting the Date/Time for PowerFlex 750-Series Drives

IMPORTANT The information in this section does not apply to PowerFlex 7-Class drives.

The PowerFlex 750-Series drive has a real-time clock which supports its time stamp feature for faults and alarms. This clock must be accurately set to provide meaningful time stamp data. Follow these steps to set the date and time.

1. Access the Status screen (see Figure 6).
2. If Port 00 (host drive) is not shown above the ESC *soft key*, use the 4 or 6 key to scroll to Port 00.
3. Press the folder key to display its last-viewed folder.
4. Use the 4 or 6 key to scroll to the PROPERTIES folder.
5. Use the 2 or 8 key to select **Set Date and Time**.
6. Press the 5 (Enter) key to display the Date/Time Set screen.

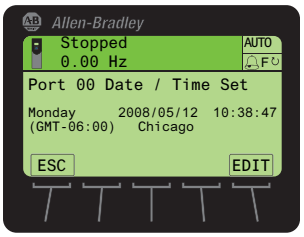

The top line shows the present date and time in this format:

yyyy/mm/dd hh:mm:ss

Note that the time is always displayed in a 24-hour format. For example, 6:00 pm is shown as 18:00:00.

7. Press the EDIT *soft key* to access the Date/Time Set Edit Mode screen, which highlights the present time zone line.

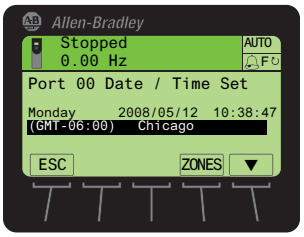

8. To select the time zone:
   a. Press the ZONES *soft key* to display the Select Time Zone screen.
   b. Use the 2 or 8 key to select your time zone region (for example, Americas).
   c. Press the 5 (Enter) key to enter your selection.
   d. Use the 2 or 8 key to select your specific time zone (for example, Chicago).

e. Press the 5 (Enter) key to enter your selected time zone.

9. To set the date:

a. Press the ▲ *soft key* to select the year in the top line.

b. Use the numeric keys to enter the correct year.

TIP To delete an erroneous date (or time) entry, use the ← *soft key*. Also, a partial or complete date (or time) value will not update until you press the ▶ *soft key* to advance to another field or press the ESC *soft key* to return to the previous screen.

c. Press the ▶ *soft key* to select the month in the top line.

d. Use the numeric keys to enter the correct month.

e. Press the ▶ *soft key* to select the day in the top line.

f. Use the numeric keys to enter the correct day.

10. To set the time:

a. Press the ▶ *soft key* to select the hour in the top line.

b. Use the numeric keys to enter the correct hour.

c. Press the ▶ *soft key* to select the minutes in the top line.

d. Use the numeric keys to enter the correct minute.

e. Press the ▶ *soft key* to select the seconds in the top line.

f. Use the numeric keys to enter the correct seconds.

11. Press the ESC *soft key* to return to the previous screen.

Creating a User-Defined Drive/Peripheral Name

The host drive and each of its connected peripherals has a default name. You can change any of these default names, but each new user-defined name cannot exceed 16 characters in length. Follow these steps to change a default name.

IMPORTANT Text editing is not supported when using Asian language characters. Only characters in the ISO 8859-1 Latin 1 Character Set, which is supported by U.S. and European personal computers, are available. If a software tool is used for text editing Asian characters, the HIM will replace all unsupported characters with a [] (narrow rectangle) mark.

1. Access the Status screen (see Figure 6).
2. Use the 4 or 6 key to scroll to the Port of the device whose name you want to change (for example, Port 00 for the host drive).
3. Press the TEXT *soft key* to display the Edit User Defined Text pop-up box.

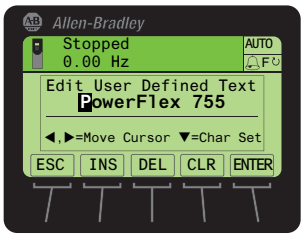

4. Use the 4 or 6 key to move the cursor to the desired character position in the displayed name.
5. Press the 2 key to access the last-viewed character set.
6. Press the appropriate numeric key to access the desired character set.

Numeric Key	Function
1	Selects the numeric character set.
3	Selects the symbols character set.
7	Selects the upper case letter character set.
9	Selects the lower case letter character set.

Also, use the appropriate *soft keys* to help create the new name.

Soft Key	Function
DEL	Deletes a highlighted character.
INS	Inserts a space to the left of a highlighted character.
CLR	Deletes an entire text string.

7. With the desired character selected in that character position, press the 5 key to select and enter the character.
8. Repeat steps 4 through 7 for each character position.
9. When the desired name is displayed on the edit pop-up box, press the ENTER *soft key* to enter and save the new name.

Customizing the Process Screen

The Process screen can be displayed as a multi-line or single-line view screen, and can be customized to show different drive monitoring items, apply a scale factor, or change text for the displayed drive parameter. These modifications are described in their respective subsections that follow.

Selecting Multi-Line or Single-Line View

By default, the Process screen shows a multi-line view of these drive monitoring items.

Drive Monitoring Item		Host PowerFlex Drive	
Screen Text	**Description**	**750-Series**	**7-Class**
Amps	Output Amps	✔	✔
Bus DC	DC Bus Volts	✔	✔
Out Vlts	Output Volts	✔	not applicable
Out Pwr	Output Power	✔	
Elp kWHr	Elapsed kWHr	✔	
Trq Cur	Torque Current	✔	

Figure 7 - Multi-Line View Process Screen

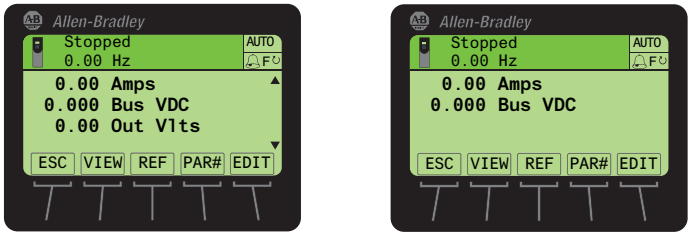

For PowerFlex 750-Series Drive

For PowerFlex 7-Class Drive

1. Press the ESC *soft key* until the Process screen appears.
2. For PowerFlex 750-Series drives only, use the or key to scroll to the hidden line items on the multi-line view screen.
3. To change the multi-line view Process screen to show each of the drive monitoring items in a larger single-line view, press the VIEW *soft key*.
4. Use the or key to scroll to each single-line view Process screen.

Figure 8 - Single-Line View Process Screen Examples

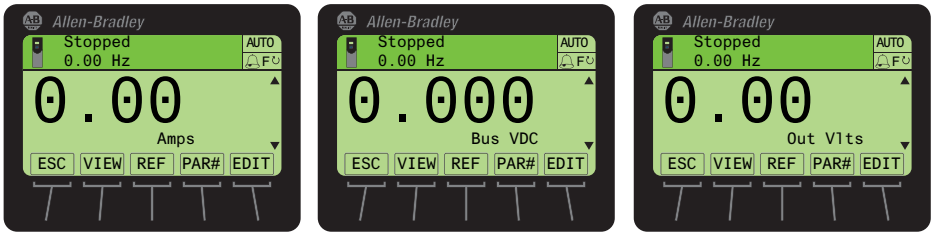

5. To return to the multi-line view Process screen, press the VIEW *soft key* again.

Changing Displayed Items, Adding a Scale Factor, or Customizing Text

You can further customize the Process screen by:

- Changing a displayed parameter to a different parameter.
- Applying a scale factor to the displayed parameter.
- Customizing text for the displayed parameter.

To do any or all of the above modifications, follow these steps.

1. With either the multi-line view Process screen (Figure 7) or the single-line view Process screen (Figure 8) displayed, use the or key to select the drive monitoring item you want to change.
2. Press the EDIT *soft key*.

   For example, suppose you want to change the first drive monitoring item. In this case, the Process Display 1 Edit screen is shown.

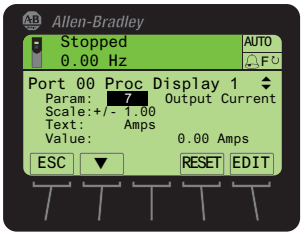

3. Use the ▼ *soft key* to select what you want to change (parameter, scale, or text) for the drive monitoring item.
4. Press the EDIT *soft key* to display its respective edit pop-up box (see examples below).

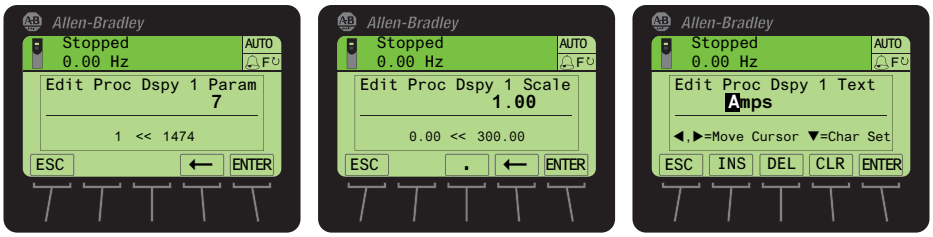

5. For parameter or scale editing, use the numeric keys and available *soft keys*, and press the ENTER *soft key* to enter and save the item.

   For text editing, use the numeric keys, available *soft keys*, and the key to enter each character. Then press the ENTER *soft key* to enter and save the complete text string.

Resetting the Drive/ Peripherals

The drive or any of its connected peripherals can be reset by removing and restoring power to the drive (power cycling). If this is not convenient or cannot be done because of application circumstances, the HIM can be used to reset the drive/peripherals. Follow these steps to reset the drive or any of its peripherals.

1. Access the Status screen (see Figure 6).
2. Use the 4 or 6 key to scroll to the Port of the device you want to reset (for example, Port 00 for the host drive).
3. Press the key to display its last-viewed folder.
4. Use the 4 or 6 key to scroll to the DIAGNOSTIC folder.
5. Use the 2 or 8 key to select **Reset Device**.
6. Press the 5 (Enter) key to display a pop-up box asking if you want to reset the device.
7. Press the ENTER *soft key* to affirm and reset the device, or press the ESC *soft key* to cancel.

Setting Factory Defaults

The procedure to set a PowerFlex 750-Series drive and its connected peripherals to factory defaults is slightly different than the procedure used for a PowerFlex 7-Class drive and its peripherals. See the respective subsection for instructions.

Setting PowerFlex 750-Series Drives/Peripherals to Factory Defaults

1. Access the Status screen (see Figure 6).
2. Use the 4 or 6 key to scroll to the Port of the device whose parameters you want to set to factory defaults (for example, Port 00 for the host drive or the respective port number for one of the drive's connected peripherals).
3. Press the key to display its last-viewed folder.
4. Use the 4 or 6 key to scroll to the MEMORY folder.
5. Use the 2 or 8 key to select **Set Defaults**.
6. Press the 5 (Enter) key to display the Set Defaults pop-up box (see examples below).

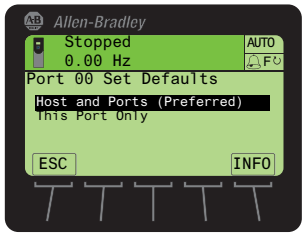

For Host Drive

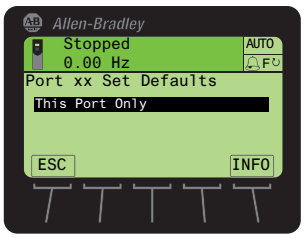

For Connected Peripheral

7. Use the 2 or 8 key to select the appropriate action.
   - **Host and Ports (Preferred):** Selects the host device and all ports for a factory default action.
   - **This Port Only:** Selects only this port for a factory default action.

   TIP For a description of a selected menu item, press the INFO *soft key*.

8. Press the 5 (Enter) key to display the warning pop-up box to reset defaults.

Figure 9 - 'Host and Ports (Preferred)' Pop-Up Box

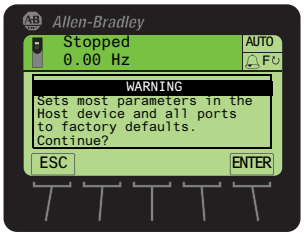

Press the ENTER *soft key* to affirm and set most parameters for the host drive and port devices to factory defaults. In this case, see the host drive and port device documentation for the settings that will **not** be restored—or press the ESC *soft key* to cancel.

Figure 10 - 'This Port Only' Pop-Up Box

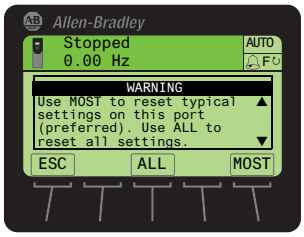

Press the MOST *soft key* to set **most** settings for the selected port device to factory defaults. In this case, see the host drive documentation for the settings that will **not** be restored. Press the ALL *soft key* to set **all** settings for the selected port device to factory defaults—or press the ESC *soft key* to cancel.

Setting PowerFlex 7-Class Drives/Peripherals to Factory Defaults

1. Access the Status screen (see Figure 6).
2. Use the 4 or 6 key to scroll to the Port of the device whose parameters you want to set to factory defaults (for example, Port 00 for the host drive or the respective port number for one of the drive's connected peripherals).
3. Press the folder key to display its last-viewed folder.
4. Use the 4 or 6 key to scroll to the MEMORY folder.
5. Use the 2 or 8 key to select **Set Defaults**.
6. Press the 5 (Enter) key to display the Set Defaults pop-up box.

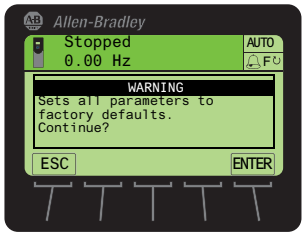

7. Press the ENTER *soft key* to affirm and set all device parameter values to factory defaults—or press the ESC *soft key* to cancel.

Setting Display Flashing for Fault Indication

Whenever a fault for the host drive or any of its connected peripherals is detected, a pop-up Fault Display screen (see page 30) appears. By default, only the Status Bar flashes to alert the operator. However, you can change the flash mode for the Fault Display screen to one of the following modes:

- Flash Bklite; selects the entire LCD screen to flash.
- Flash Status (default); selects only the Status Bar (item 1, Figure 3) to flash.
- Flash None; selects no flashing for the Fault Display screen.

Follow these steps to change the flash mode for the Fault Display screen.

1. Access HIM **Parameter 04 - [Fault Dspy Type]** using either the Direct Parameter Access method (page 42) or Alternate Linear List method (page 43).
2. Press the EDIT *soft key* to display the Edit Fault Dspy Type pop-up box.

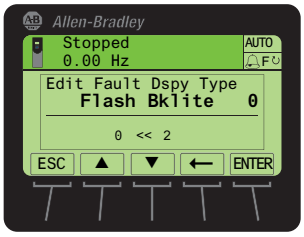

3. Use the ▲ and ▼ *soft keys* to select the desired flash mode. To delete an erroneous entry, use the ← *soft key*.
4. Press the ENTER *soft key* to enter your selection and return to the parameter screen.

Setting Display Flashing for Alarm Indication

Whenever an alarm for the Host Drive is detected, an alarm bell icon appears in the Status Bar. By default, only the Status Bar flashes to alert the operator. However, you can change the flash mode for alarm indication to one of the following modes:

- Flash Bklite; selects the entire LCD screen to flash.
- Flash Status (default); selects only the Status Bar (item 1, Figure 3) to flash.
- Flash None; selects no flashing for alarm indication.

Follow these steps to change the flash mode for alarm indication.

1. Access HIM **Parameter 05 - [Alarm Dspy Type]** using either the Direct Parameter Access method (page 42) or Alternate Linear List method (page 43).
2. Press the EDIT *soft key* to display the Edit Alarm Dspy Type pop-up box.

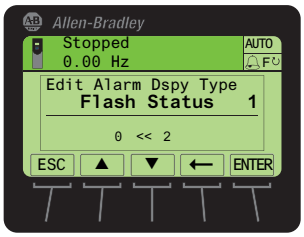

3. Use the ▲ and ▼ *soft keys* to select the desired flash mode.

   To delete an incorrect entry, use the ← *soft key*.
4. Press the ENTER *soft key* to enter your selection and return to the parameter screen.

Viewing/Editing Drive or Peripheral Parameters

The PowerFlex 20-HIM-A6 or 20-HIM-C6S HIM can show host drive parameters in a File-Group-Parameter view or by Linear List. To access drive or peripheral parameters for viewing or editing, use either the direct parameter access method or the alternate linear list access method. See the respective subsections that follow for instructions.

Selecting File-Group-Parameter or Linear List View

TIP Not all peripheral devices support viewing parameters in a File-Group-Parameter view.

Follow these steps to change viewing between File-Group-Parameter and Linear List.

1. Access the Status screen (see Figure 6).
2. Use the 4 or 6 key to scroll to the Port of the device whose parameters you want to access (for example, Port 00 for the host drive).
3. Press the key to display its last-viewed folder.
4. Use the 4 or 6 key to scroll to the DEV PARAM or HOST PARAM folder.
5. Use the 2 or 8 key to select **Linear List** or **File-Group**.
6. Press the 5 (Enter) key to display the last-viewed or first parameter in the Linear List, or the last-viewed or first parameter in the first Group.

Direct Parameter Access Method

1. Access the Status screen (see Figure 6).
2. Use the 4 or 6 key to scroll to the Port of the device whose parameters you want to access (for example, Port 00 for the host drive).
3. Press the PAR# *soft key* to display the Jump to Param # entry pop-up box.

   TIP Some devices have two sets of parameters (Device and Host parameters). In this case, a pop-up box will appear enabling you to first choose the parameter set in which the parameter that you want to access resides.

4. Use the numeric keys to enter the desired parameter number, or use the ▲ or ▼ *soft key* to scroll to the desired parameter number.

   TIP Pressing and holding the ▲ or ▼ *soft key* for 1 second or longer provides continuous scrolling until you release the key.

5. Press the ENTER *soft key* to display the parameter.

6. Press the EDIT *soft key* (for editable parameters only) to display the Edit Parameter pop-up box.

Figure 11 - Example Edit Parameter Pop-Up Box

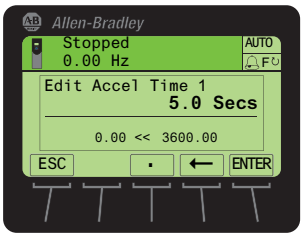

7. Use the numeric keys, decimal *soft key*, and ← *soft key* to edit the parameter.

TIP When the decimal *soft key* is pressed while editing a numeric value, this key temporarily changes to an EXP *soft key* to allow exponential entry.

8. Press the ENTER *soft key* to enter the new parameter value and return to the parameter screen.

Alternate Linear List Access Method

1. Access the Status screen (see Figure 6).
2. Use the 4 or 6 key to scroll to the Port of the device whose parameters you want to access (for example, Port 00 for the host drive).
3. Press the key to display its last-viewed folder.
4. Use the 4 or 6 key to scroll to the PARAMETER folder.
5. Use the 2 or 8 key to select **Linear List**.
6. Press the 5 (Enter) key to display either the device's last-viewed parameter or the first parameter in the linear list.
7. Use the 2 or 8 key to scroll to the desired parameter.
8. Press the EDIT *soft key* (for editable parameters only) to display the Edit Parameter pop-up box (Figure 11).
9. Use the numeric keys, decimal *soft key*, and ← *soft key* to edit the parameter.

TIP When the decimal *soft key* is pressed while editing a numeric value, this key temporarily changes to an EXP *soft key* to allow exponential entry.

10. Press the ENTER *soft key* to enter the new parameter value and return to the parameter screen.

Viewing/Clearing Drive Faults or Alarms

Follow these steps to view/clear drive faults or alarms.

1. Access the Status screen (see Figure 6).
2. If Port 00 (host drive) is not shown above the ESC *soft key*, use the 4 or 6 key to scroll to Port 00.
3. Press the folder key to display its last-viewed folder.
4. Use the 4 or 6 key to scroll to the DIAGNOSTIC folder.
5. Use the 2 or 8 key to select **Faults** or **Alarms**.
6. Press the 5 (Enter) key to display the numbered fault/alarm queue.

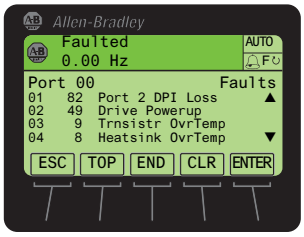

   Faults/alarms are listed from the most recent to occur (line 01) to the least recent. The fault/alarm number and name are shown at the right.

7. Use the 2 or 8 key or the following *soft keys* to navigate within the fault/alarm queue.

Soft Key	Function
ENTER	Displays the Time Stamp pop-up box for the fault/alarm. Note that the real-time clock in a PowerFlex 750-Series drive must be accurately set to provide meaningful time stamp data. For details, see Setting the Date/Time for PowerFlex 750-Series Drives on page 33. Use the 2 or 8 key to scroll to all parameters related to the displayed fault/alarm (if supported by device).
TOP	Displays the first (most recent) fault/alarm in the queue.
END	Displays the last (least recent) fault/alarm in the queue.

8. To clear faults/alarms, press the CLR *soft key*.

   In the Select Action pop-up box, select the appropriate action using the 2 or 8 key and press the 5 (Enter) key to clear the active fault/alarm or clear the fault/alarm queue. To cancel the pop-up box, press the ESC *soft key* or select **Cancel** from the list and press the 5 (Enter) key.

Viewing Peripheral Diagnostic Items

If you encounter unexpected communication problems, diagnostic items for the drive's connected peripherals—including the HIM—can help you or Rockwell Automation personnel troubleshoot the problem. Follow these steps to view peripheral diagnostic items.

1. Access the Status screen (see Figure 6).
2. Use the 4 or 6 key to scroll to the Port of the device whose diagnostic items you want to view (for example, Port 02 for the connected HIM).
3. Press the key to display its last-viewed folder.
4. Use the 4 or 6 key to scroll to the DIAGNOSTIC folder.
5. Use the 2 or 8 key to select **Diagnostic Items**.
6. Press the 5 (Enter) key to display either the device's last-viewed diagnostic item or the first diagnostic item in the list.

Table 1 shows all possible Diagnostic Items for the HIM. To view the HIM Diagnostic Items, use the procedure described above.

Table 1 - 20-HIM-A6 and 20-HIM-C6S HIM Diagnostic Items

No.	Name	Description
1	LCD Contrast	The present value of the HIM LCD contrast level, and ability to set the contrast level from this screen.
2	Common Logic Cmd	The present value of the Common Logic Command being transmitted to the drive by the HIM.
3	Prod Logic Cmd	The present value of the Product Specific Logic Command being transmitted to the drive by the HIM.
4	Common Logic Sts	The present value of the Common Logic Status being received from the drive by the HIM.
5	Prod Logic Sts	The present value of the Product Specific Logic Status being received from the drive by the HIM.
6	Reference	The present value of the Product Specific Reference being transmitted to the drive by the HIM.
7	Feedback	The present value of the Product Specific Feedback being received from the drive by the HIM.
8	Boot Flash Count	The present value of the Boot Flash Counter.
9	App Flash Count	The present value of the App Flash Counter.

Viewing/Clearing Peripheral Events

Events for the host drive's connected peripherals—including the HIM—are logged into their respective event queues. Many events in an event queue occur under normal operation. If you encounter unexpected problems, the events may help you or Allen-Bradley personnel troubleshoot the problem. Follow these step to view or clear the events of a connected peripheral.

1. Access the Status screen (see Figure 6).
2. Use the 4 or 6 key to scroll to the Port of the device whose events you want to view (for example, Port 06 for a network communication option module).
3. Press the key to display its last-viewed folder.
4. Use the 4 or 6 key to scroll to the DIAGNOSTIC folder.
5. Use the 2 or 8 key to select **Events**.
6. Press the 5 (Enter) key to display the device's numbered event queue.

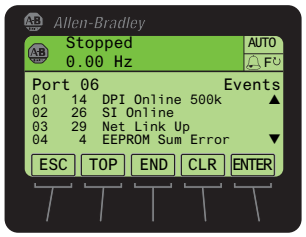

Events are listed from the most recent to occur (line 01) to the least recent. The event number and name are shown at the right.

7. Use the 2 or 8 key or the following *soft keys* to navigate within the event queue.

Soft Key	Function
ENTER	Displays the Time Stamp pop-up box for the event. Note that the real-time clock in a PowerFlex 750-Series drive must be accurately set to provide meaningful time stamp data. For details, see Setting the Date/Time for PowerFlex 750-Series Drives on page 33.
TOP	Displays the first (most recent) event in the queue.
END	Displays the last (least recent) event in the queue.

8. To clear events, press the CLR *soft key*.

   In the Select Action pop-up box, select the appropriate action using the 2 or 8 key and press the 5 (Enter) key to clear the event or clear event queue. To cancel the pop-up box, press the ESC *soft key* or select **Cancel** from the list and press the 5 (Enter) key.

The PowerFlex 20-HIM-A6 or 20-HIM-C6S HIM maintains an event queue that reports the history of its actions. Table 2 shows all possible events for the HIM. To view the HIM events, use the procedure described above.

Table 2 - 20-HIM-A6 and 20-HIM-C6S HIM Events

Code	Event	Description
1	Reserved	—
2	Device Power Up	A normal power up.
3	Device Reset	The HIM was reset due to a manual reset command or program crash.
4	EEPROM CRC Error	The HIM EEPROM Data Storage Device is corrupt.
5	App Updated	The HIM application firmware has been updated.
6	Boot Updated	The HIM boot firmware has been updated.
7	Watchdog Timeout	A program crash has occurred.
8	DPI Bus Off	A DPI Bus Off fault was detected.
9	DPI Ping Timeout	A DPI Ping Timeout fault was detected.
10	DPI Port Invalid	A DPI Port ID fault was detected.
11	DPI Port Changed	A DPI Port Changed fault was detected.
12	DPI Host Reset	The host has sent a reset message.
13	DPI Baud 125K	The DPI data rate is detected at 125K bits/second.
14	DPI Baud 500K	The DPI data rate is detected at 500K bits/second.
15	DPI Host Invalid	The HIM will not connect to this type of host.
16	DPI Dup Port	Another DPI device is already connected to this port.
17	DPI Type 0 Logon	The DPI log on was completed successfully.
18	DPI Type 0 Time	A DPI Type 0 Command has timed out.
19-23	Reserved	—
24	DPI Msg Timeout	A message to a DPI device has timed out.
25	DPI Manual Reset	A reset command was sent through a fault object.

Checking Drive and Peripheral Firmware Revisions

Follow these steps to check the firmware revision of the drive or its peripherals.

1. Access the Status screen (see Figure 6).
2. Use the 4 ◄ or ► 6 key to scroll to the Port of the device whose firmware version you want to view (for example, Port 00 for the host drive).
3. Press the folder key to display its last-viewed folder.
4. Use the 4 ◄ or ► 6 key to scroll to the DIAGNOSTIC folder.
5. Use the 2 ▼ or 8 ▲ key to select **Device Version**.
6. Press the 5 (Enter) key to display device version information.

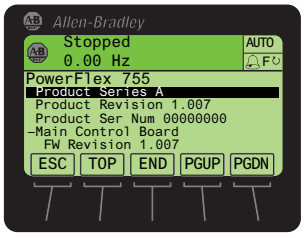

Using the CopyCat Function

PowerFlex 750-Series drives and PowerFlex 7-Class drives provide a CopyCat function that enables you to upload individual parameter sets for the host drive or any of its connected peripherals into the HIM. Furthermore, an Upload All Ports function enables you to conveniently upload multiple parameter sets for the host drive **and** all of its connected peripherals in one single file. In either case, this information can then be used as backup or can be transferred to another drive or peripheral device by downloading the file from the HIM's memory.

TIP The Upload All Ports and Download All Ports functions are only available for the host drive (Port 00) due to their unique functionality.

The CopyCat function also enables you to rename or delete individual or multiple parameter sets stored in the HIM.

The HIM can store up to 50 individual parameter sets or up to 5 multiple parameter sets. Due to the memory capacity of the HIM, these maximums will vary when storing combinations of individual and multiple parameter sets.

Generally, the upload or download transfer process manages all conflicts. However, the download will stop and a text message will appear if any of the following conditions exist:

- A device mismatch, such as firmware revision, device type, or device series is detected.
- The drive is password protected.
- The drive is running.

You then have the option to completely stop the download or continue after noting the discrepancy for the parameters that could not be downloaded. These parameters can then be manually adjusted.

IMPORTANT When using the HIM with a PowerFlex 753 drive with firmware revision 1.05 or earlier, or a PowerFlex 755 drive with firmware revision 1.10 or earlier, the CopyCat function cannot upload/download DeviceLogix values for DLX Out xx and DLX In xx parameters and DeviceLogix program routines. Drives with a later firmware revision support this function, but the HIM does **not** support screen formatting for the DeviceLogix program.

Creating CopyCat Files

1. Access the Status screen (see Figure 6).
2. Use the 4 or 6 key to scroll to the Port of the device whose parameter set you want to copy (for example, Port 00 for the host drive).
3. Press the key to display its last-viewed folder.
4. Use the 4 or 6 key to scroll to the MEMORY folder.
5. Use the 2 or 8 key to select **HIM CopyCat**.

6. Press the 5 (Enter) key to display the CopyCat Files selection screen.

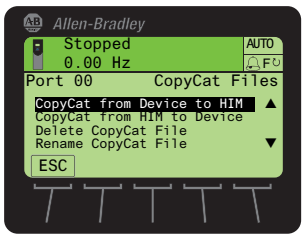

TIP Before any CopyCat files are created, only the 'CopyCat From Device to HIM' menu item is shown. When Port 00 for the Host Drive is selected in Step 2, the 'Upload All Ports' menu item also appears.

7. Use the 2 or 8 key to select the appropriate action and press the 5 (Enter) key to initiate that action.

8. With New File selected on the Select Upload File screen, press the 5 (Enter) key to create the file. A pop-up box will appear to confirm that the CopyCat file was successfully created. Press the ENTER *soft key* to complete the procedure.

TIP When a CopyCat file is created, its default file name corresponds to the device whose file is being copied. For example, a newly created CopyCat file for a PowerFlex 755 drive has a default file name of 'PowerFlex 755'.

When selecting an item row that is an existing CopyCat file—not a 'New File' row—to create a new CopyCat file, an Overwrite pop-up box will appear. Press the ENTER *soft key* to affirm and overwrite the existing CopyCat file—or press the ESC *soft key* to cancel.

Renaming CopyCat Files

IMPORTANT Text editing is not supported when using Asian language characters. Only characters in the ISO 8859-1 Latin 1 Character Set, which is supported by U.S. and European personal computers, are available. If a software tool is used for text editing Asian characters, the HIM will replace all unsupported characters with a [] (narrow rectangle) mark.

1. Access the Status screen (see Figure 6).
2. Use the 4 or 6 key to scroll to the Port of the device whose CopyCat file you want to rename (for example, Port 00 for the host drive).
3. Press the folder key to display its last-viewed folder.
4. Use the 4 or 6 key to scroll to the MEMORY folder.
5. Use the 2 or 8 key to select **HIM CopyCat**.

6. Press the 5 (Enter) key to display the CopyCat Files selection screen.

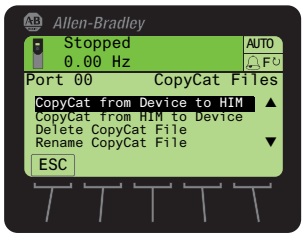

7. Use the 2 or 8 key to select **Rename CopyCat File**.
8. Press the 5 (Enter) key to display the Select File To Rename pop-up box.
9. Use the 2 or 8 key to select the file to be renamed.
10. Press the 5 (Enter) key to display the Edit CopyCat File Text pop-up box.

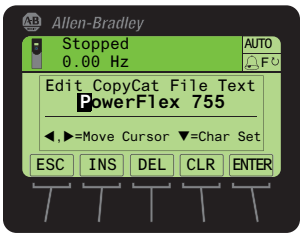

11. Use the 4 or 6 key to move the cursor to the desired character position in the displayed name.
12. Press the 2 key to access the last-viewed character set.
13. Press the appropriate numeric key to access the desired character set.

Numeric Key	Function
1	Selects the numeric character set.
3	Selects the symbols character set.
7	Selects the upper case letter character set.
9	Selects the lower case letter character set.

Also, use the appropriate *soft keys* to help create the new name.

Soft Key	Function
DEL	Deletes a highlighted character.
INS	Inserts a space to the left of a highlighted character.
CLR	Deletes an entire text string.

14. With the desired character selected in that character position, press the 5 key to select and enter the character.
15. Repeat steps 11 through 14 for each character position.
16. When the desired name is displayed on the edit pop-up box, press the ENTER *soft key* to enter and save the new name.

Deleting CopyCat Files

1. Access the Status screen (see Figure 6).
2. Use the 4 or 6 key to scroll to the Port of the device whose parameter set you want to delete (for example, Port 00 for the host drive).
3. Press the key to display its last-viewed folder.
4. Use the 4 or 6 key to scroll to the MEMORY folder.
5. Use the 2 or 8 key to select **HIM CopyCat**.
6. Press the 5 (Enter) key to display the CopyCat Files selection screen.

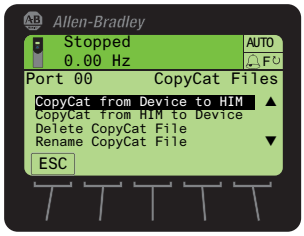

7. Use the 2 or 8 key to select **Delete CopyCat File**.
8. Press the 5 (Enter) key to display the Select File To Delete pop-up box.

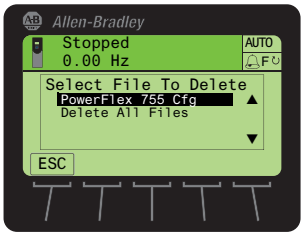

9. Use the 2 or 8 key to select the file (or all files) to delete.
10. Press the 5 (Enter) key to display the confirmation pop-up box.
11. Press the ENTER *soft key* to affirm and delete the selected CopyCat file, or press the ESC *soft key* to cancel.

    Another pop-up box will appear to confirm that the CopyCat file was successfully deleted.
12. Press the ENTER *soft key* to affirm and complete the procedure.

Changing PowerFlex 750-Series Drive Parameter Associations

PowerFlex 750-Series drives have special parameters (indirect selector parameters and reference parameters) which are always associated with other parameters. The values for these special parameters are actually pointers to other parameters in the drive or to *Host* parameters in connected peripherals. To change a parameter association, first access the indirect selector or reference parameter. Second, select the port number of the device whose parameter you want to target for association. Then, select the target parameter of that device. If the target parameter is a bit parameter, you must also select the appropriate bit you want to associate with the indirect selector or reference parameter.

Parameter associations can be changed using one of these methods:

- Individual Screen Entry Method—where individual pop-up screens are used to enter the required parameter association data.
- Direct Numeric Entry Method—where the required parameter association data is entered as a number string on a single pop-up screen.

The following example illustrates how to use each method to change a parameter association. Suppose you want the drive speed reference to come from the network controller via the embedded EtherNet/IP adapter on the Main Control Board in a PowerFlex 755 drive.

Using Individual Screen Entry Method

1. Access the indirect selector or reference parameter whose association you want to change (for this example, drive Parameter 545 - [Spd Ref A Sel] as shown below).

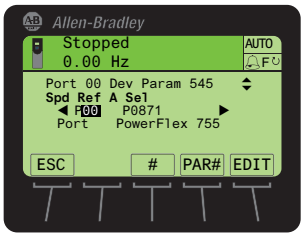

   In this example, the Port field is shown selected. Use the 4 ◀ or ▶ 6 key to select the Port, Parameter, or Bit (if applicable) fields.

   TIP Depending on the indirect selector or reference parameter selected, you may see more available ports in the list.

2. Press the EDIT *soft key* to display the edit pop-up box for the selected field (in this case, the port number field).

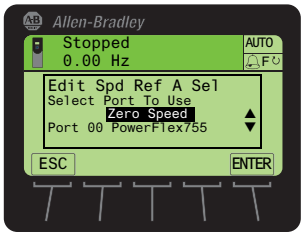

3. Use the 2 or 8 key to scroll to the port number of the device whose parameter you want to target for the association (for this example, Port 00, where the speed Reference parameters for the available drive ports are located).

TIP The 'Zero Speed' setting may be available to select for specific applications that require a safe-state speed Reference.

4. Press the ENTER *soft key* to enter the selected port number.

   The target parameter selection pop-up box appears (see example screen below), showing a list of available target parameters that can be associated.

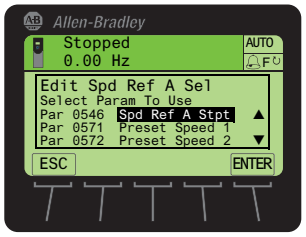

5. Use the 2 or 8 key to scroll to the target parameter you want to associate.

   For this example, we selected drive Parameter 877 - [Port 13 Reference]).

6. Press the ENTER *soft key* to enter the selected target parameter.

   If the target parameter:

   - **Is not a bit parameter**, the parameter association is now changed and the indirect selector or reference parameter screen re-appears with the associated parameter information shown.

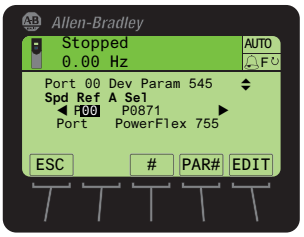

   - **Is a bit parameter**, a list of available bit numbers is displayed. Use the 2 or 8 key to scroll to the bit number of the target parameter you want to associate, and press the ENTER *soft key*. The parameter

association is now changed and the indirect selector or reference parameter screen re-appears with the associated parameter information shown.

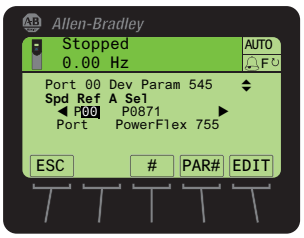

Using Direct Numeric Entry Method

1. Access the indirect selector or reference parameter whose association you want to change (for this example, drive Parameter 545 - [Spd Ref A Sel] as shown below).

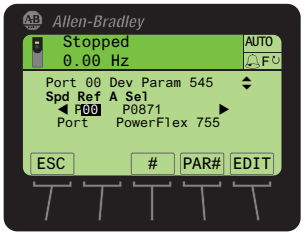

2. With any field (port, parameter, or bit) selected, press the # *soft key* to display the Direct Numeric Entry pop-up box.

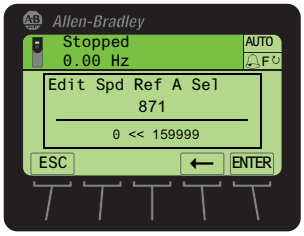

3. Use the numeric keys to enter a number string that represents the target parameter's device port number, parameter number and, only when the target parameter is a bit parameter, its bit number.

   The number string format is PPpppp.bb, where:

   PP = device port number
   pppp = target parameter number
   bb = bit number (only used when target parameter is a bit parameter)

4. Press the ENTER *soft key* to enter the number string and complete the parameter association.

   The indirect selector or reference parameter screen re-appears with the associated parameter information.

Linking Parameters in PowerFlex 700/700S Drives

Most parameter values are entered directly by the user. However, specific parameters can be 'linked', so the value of one parameter becomes the value of another. For example, the value of an analog input can be linked to an acceleration time. Rather than entering an acceleration time directly (via the HIM), the link allows the value to change by varying the analog input signal. This can provide additional flexibility for advanced applications.

Each link has two components:

- Source parameter—sender of information
- Destination parameter—receiver of information

Most parameters can be a source of data for a link, except parameters that use an integer value representing an ENUM (text selection). These are not allowed, since the integer is not actual data (it represents a value). See the drive documentation for a list of parameters that can be destinations. All links must be established between equal data types (parameter value formatted in floating point can only source data to a destination parameter value that is also a floating point).

Establishing a Link

1. Access a valid destination parameter to be linked (for example, the Accel Time 1 parameter 140 for a PowerFlex 700 drive or parameter 32 for a PowerFlex 700S drive).
2. Press the LINK *soft key* to display the Link pop-up box for that parameter.

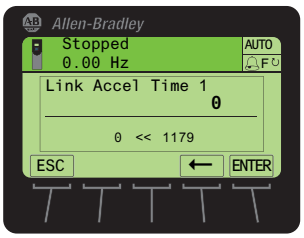

3. Enter the source parameter number (for example, the Analog In1 Value parameter 16 for a PowerFlex 700 drive or parameter 801 for a PowerFlex 700S drive) to which you want to link the destination parameter.
4. Press the ENTER *soft key*.

   The destination parameter screen reappears with the respective source parameter value now mapped over the destination parameter range, and is shown in destination parameter units. In this example, the value for Analog Input 1 is 10.000 volts for a PowerFlex 700 drive, and is shown as 10.0 seconds.

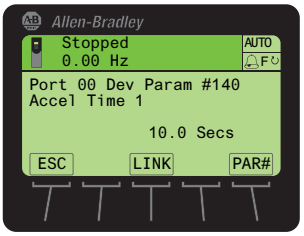

Deleting an Established Link

Follow these steps to delete an established link.

1. Access the screen for the destination parameter.
2. Press the LINK *soft key*.
3. In the Link pop-up box, enter a value of zero.
4. Press the ENTER *soft key* to delete the established link.

Using a Password

All parameter configuration settings for the drive and its connected peripherals can be protected from unauthorized access using a password.

Setting/Changing the Password

1. Access the Status screen (see Figure 6).
2. If Port 00 (host drive) is not shown above the ESC *soft key*, use the 4 or 6 key to scroll to Port 00.
3. Press the folder key to display its last-viewed folder.
4. Use the 4 or 6 key to scroll to the PROPERTIES folder.
5. Use the 2 or 8 key to select **Change Password**.
6. Press the 5 (Enter) key to display the Enter New Password pop-up box.

7. Use the numeric keys to enter a desired password value.

   Use the ← *soft key* to delete an erroneous entry.

   For your convenience, write down your assigned password and store it in a safe place.

   Password = ____ ____ ____ ____ ____

8. Press the ENTER *soft key* to enter the new password.
9. After the password verification screen appears, confirm the new password by re-entering its value.

   Thereafter, the HIM immediately logs in to the drive, which is indicated by the **Log Out** menu line in the PROPERTIES folder. All drive/peripheral parameters are accessible to view or edit.
10. To initiate password protection, do the following:
    a. Use the 2 or 8 key to select **Log Out** from the PROPERTIES folder menu.
    b. Press the 5 (Enter) key to display the log out verification pop-up box.
    c. Press the ENTER *soft key* to affirm and log out—or press the ESC *soft key* to cancel.

Changing Password-protected Drive/Peripheral Parameters

When the host drive is password protected, parameter settings for the drive and its connected peripherals can be viewed—but not changed until after the correct password value is entered.

When attempting to edit a parameter value while logged out, the HIM will prompt you for the password before allowing access.

Password protection also applies to:

- Drive start-up procedure
- Factory defaults
- User sets
- CopyCat function

Follow these steps to edit password-protected parameters.

1. Access the Status screen (see Figure 6).
2. If Port 00 (host drive) is not shown above the ESC *soft key*, use the 4 or 6 key to scroll to Port 00.
3. Press the folder key to display its last-viewed folder.
4. Use the 4 or 6 key to scroll to the PROPERTIES folder.
5. Use the 2 or 8 key to select **Log In**.
6. Press the 5 (Enter) key to display the Enter Password pop-up box.

7. Use the numeric keys to enter the existing password value.

   Use the ← *soft key* to delete an erroneous entry.
8. Press the ENTER *soft key* to enter the existing password.

   Thereafter, any parameter setting can be changed.

Disabling Password Protection

1. Access the Status screen (see Figure 6).
2. If Port 00 (host drive) is not shown above the ESC *soft key*, use the 4 or 6 key to scroll to Port 00.
3. Press the folder key to display its last-viewed folder.
4. Use the 4 or 6 key to scroll to the PROPERTIES folder.
5. Use the 2 or 8 key to select **Log In**.
6. Press the 5 (Enter) key to display the Enter Password pop-up box.

7. Use the numeric keys to enter the existing password value.

   Use the ← *soft key* to delete an erroneous entry.
8. Press the ENTER *soft key* to enter the existing password.
9. Use the 2 or 8 key to select **Change Password**.
10. Press the 5 (Enter) key to display the Enter New Password pop-up box.

11. Use the numeric keys and the ← *soft key* to enter '0', the default value to disable the password protection feature.
12. Press the ENTER *soft key* to enter the '0' (disable) default value.
13. After the password protection verification pop-up box appears, confirm the new password by re-entering '0'.
14. Press the ENTER soft key to disable password protection.

Initiating PowerFlex 750-Series Drive Port Verification

IMPORTANT The information in this section does not apply to PowerFlex 7-Class drives.

Upon powerup, the HIM verifies that the PowerFlex 750-Series drive has initiated Port Verification. The host drive then checks for port conflicts. If any conflicts are present, a Device Conflicts pop-up box appears listing all devices with conflicts.

Conflict Types

If the conflict can be resolved, a '!' symbol precedes the port number. If the conflict cannot be resolved without removing or replacing the device, an 'X' symbol precedes the port number. There are five possible conflict types.

Symbol	Conflict Type
!	Changed
!	Requires Configuration
X	Not Functioning
X	Not Supported
X	Invalid Duplicate

In the Device Conflicts pop-up box, scroll up or down to highlight/select an individual device row and press the INFO *soft key*. Another pop-up box appears for the selected device showing the type of conflict and related information.

If information is available for the device that previously occupied that port, it will also be shown.

Use the FIX *soft key*—displayed only if all conflict types are 'Changed' or 'Requires Configuration'—to resolve conflicts. After pressing the FIX *soft key*, a pop-up box will appear asking to confirm that the new device(s) should be accepted. Press the ENTER *soft key* to affirm and resolve the conflicts for all devices. Thereafter, the HIM will re-read the drive Port Verification information to ensure that no further conflicts exist.

IMPORTANT Please note the following important conflict resolution information:

- The Device Conflict pop-up window remains on the screen until all conflicts are resolved.
- All conflicts must be resolved to access a Folder screen or Control screen. Only the (Stop) key and the assigned *soft keys* (INFO and FIX) will be functional until no conflicts exist.
- The host drive will not be able to run while any conflicts are present.

Resolving 'Changed' or 'Requires Configuration' Conflicts

When a 'Changed' or 'Requires Configuration' conflict exists on powerup, a '!' symbol precedes the port number in the Device Conflicts pop-up box.

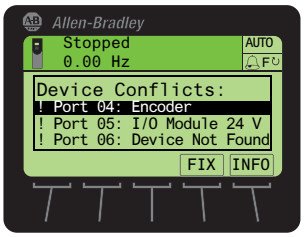

1. Select a port device (in this example, the Encoder card) and press either the INFO *soft key* to show additional information about the conflict, or press the FIX *soft key* to resolve all device conflicts.

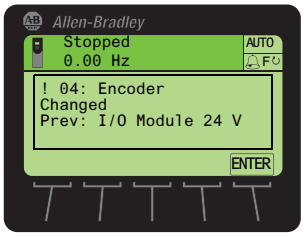

Example screen when the INFO *soft key* is pressed.

2. Press the ENTER *soft key* to affirm and re-display the Device Conflicts pop-up box.

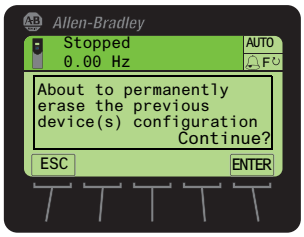

Example screen when the FIX *soft key* is pressed.

Press the ENTER *soft key* to affirm and resolve all device conflicts, or press the ESC *soft key* to cancel.

Resolving 'Not Functioning', 'Not Supported', or 'Invalid Duplicate' Conflicts

When a 'Not Functioning', 'Not Supported', or Invalid Duplicate' conflict exists on powerup, an 'X' symbol precedes the port number in the Device Conflicts pop-up box.

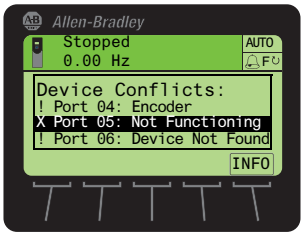

1. Select the port preceded with an 'X' (in this example, Port 05) and press the INFO *soft key* to show additional information about the conflict (see example below).

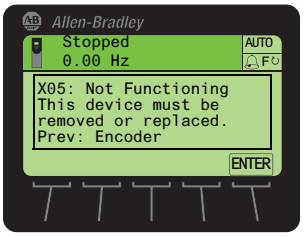

2. Follow the screen prompts to resolve the port conflict.

   Or press the ENTER *soft key* to affirm and re-display the Device Conflicts pop-up box.

Changing Language for the Display Text

All HIM screen text can be displayed in one of the supported languages. The default language is English.

TIP If the drive is set to a language not supported by the HIM, a pop-up box appears asking you to select another language.

Follow these steps to select another supported language.

1. Access the Status screen (see Figure 6).
2. Press the (Language) *soft key* to display the list of available languages.
3. Use the or key to select the desired language.
4. Press the (Enter) key to enter the selected language.

   All HIM screen text now appears in the selected language.

Updating the HIM Firmware or Language

The HIM firmware can be updated over the network or serially through a direct connection from the drive to the computer using a 1203-USB or 1203-SSS serial converter.

When updating firmware over the network, you can use the Allen-Bradley ControlFLASH software tool, the built-in update capability of DriveExplorer Lite or Full software, or the built-in update capability of DriveExecutive software.

When updating firmware through a direct serial connection from the drive to the computer, you can use the same Allen-Bradley software tools described above, or you can use HyperTerminal software set to the X-modem protocol.

To obtain a firmware or language update for the HIM, go to http://www.ab.com/support/abdrives/webupdate. This website contains all firmware update files, supported language files, and associated Release Notes that describe the following items:

- Firmware update enhancements and anomalies
- How to determine the existing firmware revision
- How to update the firmware using ControlFLASH, DriveExplorer, DriveExecutive, or HyperTerminal software

IMPORTANT When the HIM firmware is updated in the field to support another available language, the language selected for download will **replace** all other supported languages—except English, which always remains as the default language.

Notes:

Specifications

This appendix provides the specifications for the HIM.

Topic	Page
Communications	65
Electrical	65
Mechanical	65
Environmental	65
Regulatory Compliance	66

Communications

Protocol	Drive Peripheral Interface (DPI)
Data Rates	125 kbps or 500 kbps

Electrical

Consumption	140 mA at 12V DC supplied by the Host Drive

Mechanical

Dimensions	**20-HIM-A6**	**20-HIM-C6S**
Height	116.0 mm (4.57 in.)	180.0 mm (7.08 in.)
Width	70.0 mm (2.75 in.)	93.0 mm (3.66 in.)
Depth	16.0 mm (0.63 in.)	25.0 mm (0.98 in.)
Weight	91 g (3.2 oz.)	173 g (5.7 oz.)

Environmental

Temperature	
Operating	0…50 °C (32…122 °F)
Storage	-40…85 °C (-40…185 °F)
Relative Humidity	5…95% non-condensing
Atmosphere	**Important:** The HIM **must not** be installed in an area where the ambient atmosphere contains volatile or corrosive gas, vapors or dust. If the HIM is not going to be installed for a period of time, it must be stored in an area where it will not be exposed to a corrosive atmosphere.
Vibration	
Operating	2.5 g @ 5 Hz…2 kHz
Non-Operating	5 g @ 5 Hz…2 kHz
Shock	
Operating	30 g peak acceleration, 11 (±1) ms pulse width
Non-Operating	50 g peak acceleration, 11 (±1) ms pulse width

Regulatory Compliance

Certification	Specification
UL	UL508C
cUL	CAN / CSA C22.2 No. 14-M91
CE	EN50178 and EN61800-3
CTick	EN61800-3

NOTE: This is a product of category C2 according to IEC 61800-3. In a domestic environment this product may cause radio interference in which case supplementary mitigation measures may be required.

HIM Parameters

This appendix provides information about the HIM parameters.

Besides the HIM, the following configuration tools can also be used to monitor or change parameter values of the HIM, drive, and other connected peripherals:

- Connected Components Workbench software, version 1.02 or later
- DriveExplorer software, version 6.01 or later
- DriveExecutive software, version 5.01 or later

Parameter List

Parameter No.	Name and Description	Details	
01	**[Port Number]** Displays the port on the drive to which the HIM is connected.	Minimum: Maximum: Type:	1 7 Read Only
02	**[DPI Data Rate]** Displays the DPI data rate at which the HIM is communicating with the drive.	Values: Type:	0 = 125 kbps 1 = 500 kbps Read Only
03	**[Initial Screen]** Selects the initial HIM screen to be displayed on power up.	Default: Value: Type: Reset Required:	0 = Status Scrn 0 = Status Scrn 1 = Process Scrn Read/Write Yes
04	**[Fault Dspy Type]** Selects the type of display flash to be shown when a drive or peripheral fault is detected.	Default: Values: Type: Reset Required:	1 = Flash Status 0 = Flash Bklite 1 = Flash Status 2 = Flash None Read/Write No
05	**[Alarm Dspy Type]** Selects the type of display flash to be shown when a drive alarm is detected.	Default: Values: Type: Reset Required:	1 = Flash Status 0 = Flash Bklite 1 = Flash Status 2 = Flash None Read/Write No
06	**[User Dspy Enable]** Enables/disables the HIM's automatic user display time function, which is configured using **Parameter 07 - [User Dspy Time]**.	Default: Values: Type: Reset Required:	1 = Enable 0 = Disable 1 = Enable Read/Write Yes
07	**[User Dspy Time]** Sets the amount of time that a screen will remain displayed as long as the HIM keys are not used. After this time elapses, the screen is automatically replaced by the initial screen, which is selected using **Parameter 03 - [Initial Screen]**.	Default: Minimum: Maximum: Type: Reset Required:	60 sec 10 sec 300 sec Read/Write Yes

Notes:

History of Changes

Topic	Page
20HIM-UM001C-EN-P, January 2012	69
20HIM-UM001B-EN-P, October 2010	70
20HIM-UM001A-EN-P, January 2009	70

This appendix summarizes the revisions to this manual. Reference this appendix if you need information to determine what changes have been made across multiple revisions. This may be especially useful if you are deciding to upgrade your hardware or software based on information added with previous revisions of this manual.

20HIM-UM001C-EN-P, January 2012

This table contains the changes, which were the result of HIM firmware revision 2.001.

Topic
In Chapter 3: • Added the Status Bar element 'DLX' to indicate that the Host Drive DeviceLogix feature is enabled. • Added new *soft key* labels 'ACK', 'PGDN', and 'PGUP' on the Device Version information screen to enhance navigation.
In Chapter 4: • Changed the Fault Display screen flash mode default from 'Flash Bklite' to 'Flash Status'. • Added a TIP statement that holding the ▲ or ▼ soft key while using the Direct Parameter Access method to view/edit a parameter provides continuous scrolling until the key is released. • Revised Example Device Version Information Screen to show the added soft key labels 'Top', 'End', 'PGUP', and 'PGDN'.
In Appendix B, changed the default for Parameter 04 - [Fault Dspy Type] from '0' (Flash Bklite) to '1' (Flash Status).

20HIM-UM001B-EN-P, October 2010

Topic
In Chapter 2, added new subsection 'PowerFlex 750-Series IP54, NEMA/UL Type 12 Drives' with instructions to install the HIM.
In Chapter 3: • In the 'Single Function Keys' subsection, added footnote to the single function keys Folders and Controls explaining that these keys are temporarily inactive during drive Start Up. • In the 'Soft Key Labels' subsection, added new RESET soft key label to the table. • In the 'Folder Screens' subsection, added new Param Access Level menu item to the DEV PARAM folder screen.
In Chapter 4: • In the 'Setting the Date/Time for the Drive (only PowerFlex 750-Series Drives)' subsection, revised the Date/Time and Date/Time Set Edit Mode screens. • In the 'Changing Displayed Items, Adding a Scale Factor or Customizing Text' subsection, revised the Process Display 1 screen. • In the 'Direct Parameter Access' subsection, revised the Edit Parameter pop-up box, added a TIP to step 7. • In the 'Alternate Linear List' subsection, added a TIP to step 9. • In the 'Using the CopyCat Function' section, added an Important statement describing the limitations of the CopyCat feature with DeviceLogix functions in PowerFlex 750-Series drives. • In the 'Using Individual Screen Entry Method' subsection, revised Port Number Selection and Target Parameter Selection pop-up boxes.

20HIM-UM001A-EN-P, January 2009

Topic
This was the first release of this manual.

A

accessing parameters
- alternate linear list method 43
- direct parameter access method 42

adjusting display contrast 32
Alarm Dspy Type parameter 67
alarm/fault queues for the drive 44
attentions 12

C

changing PowerFlex 750-Series drive parameter associations 52
checking drive/peripheral firmware revisions 47
clearing
- drive faults/alarms 44
- peripheral events 46

compatible products 12
contrast adjustment for display 32
CopyCat function 48
creating user-defined drive/peripheral name 35
customizing the Process screen 36

D

date/time setting for PowerFlex 750-Series drives 33
diagnostic items for 20-HIM-A6/-C6S HIMs 45
dimensions 65
direct parameter access method 42
disabling password protection 59
display contrast adjustment 32
DPI Data Rate parameter 67
DPI data rates 65
drive fault/alarm queues 44
drive/peripheral firmware revisions - viewing 47

E

events for 20-HIM-A6/-C6S HIMs 47

F

factory defaults 38
Fault Dspy Type parameter 67
fault/alarm queues for the drive 44
features 11
firmware
- revision 9
- update guidelines 63

H

HIM (Human Interface Module)
- adjusting display contrast 32
- changing PowerFlex 750-Series drive parameter associations 52
- checking drive/peripheral firmware revisions 47
- compatible products 12
- CopyCat function 48
- creating user-defined drive/peripheral name 35
- customizing the Process screen 36
- diagnostic items 45
- events 47
- features 11
- firmware or language updating 63
- installing
  - 20-HIM-A6 HIM 14
  - 20-HIM-C6S HIM 18
- keypad key descriptions 21
- LCD display elements/descriptions 24
- linking parameters in PowerFlex 700/700S drives 55
- main screens/descriptions 26
- parameter list for HIM 67
- port verification (only PowerFlex 750-Series drives) 60
- removing 20
- resetting the drive/peripherals 38
- selecting language for display text 62
- setting date/time for PowerFlex 750-Series drives 33
- setting display flashing for
  - alarm indication 41
  - fault indication 40
- setting factory defaults 38
- specifications 65
- updating HIM firmware or language 63
- using a password 57
- viewing peripheral diagnostic items 45
- viewing/clearing
  - drive faults/alarms 44
  - peripheral events 46
- viewing/editing drive and peripheral parameters 42

I

Initial Screen parameter 67
installing
- 20-HIM-A6 HIM 14
- 20-HIM-C6S HIM 18

K

keypad key descriptions 21

L

language
- selecting for display text 62
- updating 63

LCD display elements/descriptions 24
linear list access method to parameters 43
linking parameters in PowerFlex 700/700S drives 55

M

main screens/descriptions 26
manual
conventions 9
related documentation 10
website 10

P

parameters
convention 9
list of 67
password protection
changing parameters 58
disabling 59
setting 57
peripheral diagnostic items - viewing 45
Port Number parameter 67
PowerFlex 750-Series drive port verification 60
products compatible with HIM 12

R

regulatory compliance 66
related documentation 10
removing the HIM 20
resetting the drive/peripherals 38
restoring the drive/peripherals to factory defaults 38

S

safety precautions 12
screens (main)/descriptions 26
selecting a language 62
setting
display flashing for alarm indication 41
display flashing for fault indication 40
factory defaults 38
password 57
specifications 65

T

technical support 9
time/date setting for PowerFlex 750-Series drives 33

U

updating HIM firmware or language 63
User Dspy Enable parameter 67
User Dspy Time parameter 67
using the CopyCat function 48

V

verification of ports for PowerFlex 750-Series drives 60
viewing peripheral diagnostic items 45
viewing/clearing
drive faults/alarms 44
peripheral events 46
viewing/editing drive and peripheral parameters 42

W

website for related documentation 10

Rockwell Automation Support

Rockwell Automation provides technical information on the Web to assist you in using its products. At http://www.rockwellautomation.com/support/, you can find technical manuals, a knowledge base of FAQs, technical and application notes, sample code and links to software service packs, and a MySupport feature that you can customize to make the best use of these tools.

For an additional level of technical phone support for installation, configuration, and troubleshooting, we offer TechConnect support programs. For more information, contact your local distributor or Rockwell Automation representative, or visit http://www.rockwellautomation.com/support/.

Installation Assistance

If you experience a problem within the first 24 hours of installation, review the information that is contained in this manual. You can contact Customer Support for initial help in getting your product up and running.

United States or Canada	1.440.646.3434
Outside United States or Canada	Use the Worldwide Locator at http://www.rockwellautomation.com/support/americas/phone_en.html, or contact your local Rockwell Automation representative.

New Product Satisfaction Return

Rockwell Automation tests all of its products to ensure that they are fully operational when shipped from the manufacturing facility. However, if your product is not functioning and needs to be returned, follow these procedures.

United States	Contact your distributor. You must provide a Customer Support case number (call the phone number above to obtain one) to your distributor to complete the return process.
Outside United States	Please contact your local Rockwell Automation representative for the return procedure.

Documentation Feedback

Your comments will help us serve your documentation needs better. If you have any suggestions on how to improve this document, complete this form, publication RA-DU002, available at http://www.rockwellautomation.com/literature/.

Rockwell Otomasyon Ticaret A.Ş., Kar Plaza İş Merkezi E Blok Kat:6 34752 İçerenköy, İstanbul, Tel: +90 (216) 5698400

www.rockwellautomation.com

Power, Control and Information Solutions Headquarters

Americas: Rockwell Automation, 1201 South Second Street, Milwaukee, WI 53204-2496 USA, Tel: (1) 414.382.2000, Fax: (1) 414.382.4444
Europe/Middle East/Africa: Rockwell Automation NV, Pegasus Park, De Kleetlaan 12a, 1831 Diegem, Belgium, Tel: (32) 2 663 0600, Fax: (32) 2 663 0640
Asia Pacific: Rockwell Automation, Level 14, Core F, Cyberport 3, 100 Cyberport Road, Hong Kong, Tel: (852) 2887 4788, Fax: (852) 2508 1846

Publication 20HIM-UM001D-EN-P - February 2013
Supersedes Publication 20HIM-UM001C-EN-P - January 2012

Copyright © 2013 Rockwell Automation, Inc. All rights reserved. Printed in the U.S.A.

Allen-Bradley

1321 Power Conditioning Products

Don't Ignore the Cost of Power Line Disturbance

Topic	Page
Product Overview	2
1321-3R and 3RA Series Line Reactors	3
1321 Reflective Wave Reduction (RWR) Devices	12
1321-3TH/3TW Series Three-Phase Isolation Transformers	16
1321-M Common Mode Chokes	21
1321-DC DC Link Chokes	24

Additional Resources

These documents contain additional information concerning related products from Rockwell Automation.

Resource	Description
Wiring and Grounding Guidelines for Pulse Width Modulated (PWM) AC Drives, publication DRIVES-IN001	Provides basic information needed to properly wire and ground PWM AC drives.
Safety Guidelines for the Application, Installation and Maintenance of Solid State Control, publication SGI-1.1	Provides general guidelines for the application, installation, and maintenance of solid-state control.

You can view or download publications at http://www.rockwellautomation.com/literature/. To order paper copies of technical documentation, contact your local Allen-Bradley distributor or Rockwell Automation sales representative.

For Allen-Bradley Drives Technical Support:

Title	Online at…
Allen-Bradley Drives Technical Support	www.ab.com/support/abdrives or call (1) 262.512.8176

Product Overview

Allen-Bradley reactors help keep equipment running longer by absorbing many of the power line disturbances which can shut down your drive. Allen-Bradley isolation transformers can provide both voltage change and isolation for your variable speed drive. These designs are harmonic compensated and IGBT protected to assure optimum performance in the presence of harmonics.

1321-3R and 3RA Series Line Reactors

Applying Allen-Bradley Line Reactors

At the Input of the Drive

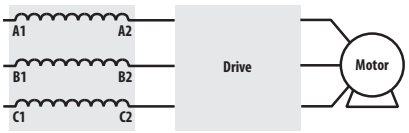

At the input of a drive, line reactors help protect against surges or spikes on the incoming power lines and help reduce harmonic distortion.

- Eliminate Nuisance Tripping
- Extend Semiconductor Life
- Reduce Harmonic Distortion
- Improve True Power Factor
- Reduce Voltage Notching
- Meet IEEE-519 or EN-61800

At the Output of the Drive

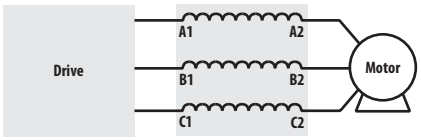

In long motor lead applications, Allen-Bradley load reactors located between the drive and motor help reduce dv/dt and motor terminal peak voltages. The use of a load reactor also helps protect the drive from surge currents caused by rapid changes in the load.

- Protect Motors from Long Lead Effects
- Reduce Output Voltage dv/dt
- Extend Semiconductor Life
- Reduce Surge Currents
- Reduce Motor Temperature
- Reduce Audible Motor Noise

With Multiple Drives

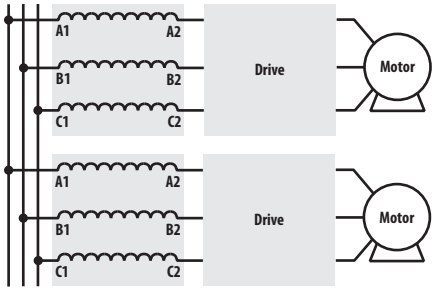

Multiple drives on a common power line should each have their own line reactor. Individual line reactors provide filtering between each drive to help reduce any crosstalk while providing optimum surge protection for each drive.

With Multiple Motors

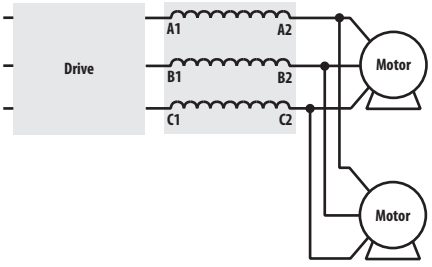

When more than one motor is controlled by a single drive, a single line reactor can typically be used between the drive and all the motors. Size the line reactor based on the total motor/load horsepower.

With Single-Phase Input

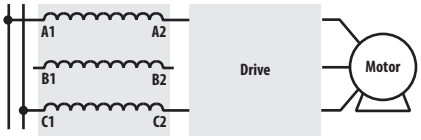

A three-phase reactor can be used for single-phase applications by routing each of the two input power conductors to the outside two coils, and leaving the center coil disconnected. The sum of the inductance of the two coils is the total inductance applied to the circuit. Contact Rockwell Automation Technical Support for assistance in specifying the proper reactor.

Selecting the Correct Impedance Rating

Why is the Right Impedance Rating Important?

Selecting the correct impedance rating is critical for your job. An impedance value too low may not limit peak current. Too high of an impedance may reduce input voltage. Allen-Bradley line reactors offer two impedance ratings.

3% Impedance Rated Reactors to Reduce Nuisance Trips

Allen-Bradley line reactors rated at 3% are typically sufficient to absorb line spikes and motor current surges and will help prevent nuisance tripping of drive and circuit breakers in most applications.

5% Impedance Rated Reactors to Reduce Harmonic Content

Allen-Bradley reactors rated at 5% are best for reducing harmonic current and frequencies. These line reactors help comply with IEEE-519 (not normally used as load reactors).

Voltage Spike Protection

Voltage spikes on AC power lines can cause elevation of the DC bus voltage which may cause the drive to trip on an overvoltage condition.

3% impedance reactors are very effective at protecting drives against voltage spikes and nuisance tripping. Allen-Bradley line reactors absorb these line spikes protecting the drive from nuisance tripping and damage.

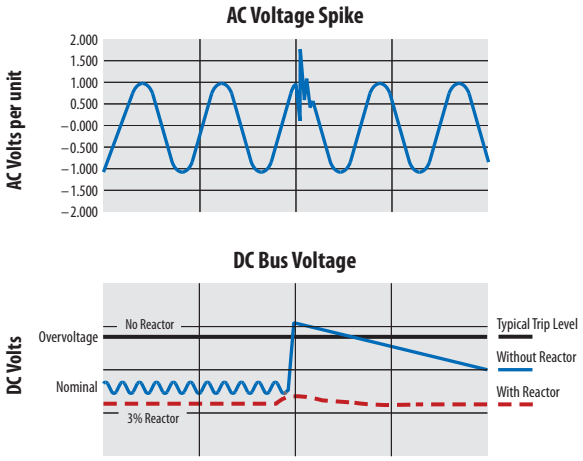

Motor Protection

Allen-Bradley load reactors can help protect motors from high peak voltages.

For IGBT drive applications with long drive-to-motor lead lengths, Allen-Bradley load reactors can help protect against fast dv/dt rise times.

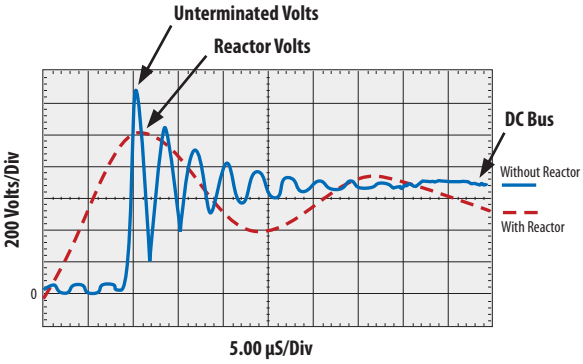

Catalog Number Explanation

Position Number

1-4		*6*	7	8		10
1321	–	3	R	4	–	B
a		*b*	*c*	*d*		*e*

a

Product	
Code	**Type**
1321	1321 Power Component

b

Phases	
Code	**Description**
3	Three-Phase

c

Device	
Code	**Description**
R	Reactor, Open
RA, RB	Reactor, NEMA 1
RAB	Reactor, NEMA 1, Cabinet Style 2 Only

d

Fundamental Amps	
Code	**Amps**
1	1
2	2
4	4
8	8
12	12
18	18
25	25
35	35
45	45
55	55
80	80
100	100
130	130
160	160
200	200
250	250
320	320
400	400
500	500
600	600
750	750
850	850
1000	1000

e

Inductance Rating	
Code	**Description**
A	Each reactor current rating has four inductance ratings also available. See the IP00 dimension table.
B	
C	
D	

Common Specifications

Specification		Rating
Material	Enclosures	IP11 (NEMA/UL Type 1) — Sheet steel in accordance with UL, NEMA requirements
		IP00 (Open) or IP20 (Open - with finger safe terminals)
	Terminations	1-45 Amp (fundamental) Ratings – Finger guard IP20 terminal block
		80-160 Amp (fundamental) Ratings – Solid copper box lugs
		200-400 Amp (fundamental) Ratings – Copper tab terminals
		401 Amps and Above – Copper tab terminals
Harmonic Compensation	All line reactors are compensated for the additional currents and high frequencies caused by the presence of harmonics	
General Protection	Impedance	3% or 5% based on the fundamental current ratings
	Overload Rating	200% of fundamental current for 30 minutes 300% of fundamental current for 1 minute
	dv/dt Protection	Meets NEMA MG-1, part 31
Electrical	Max. Rated Voltage	600V AC (units with terminal blocks) 690V AC (units with box lugs or tab terminals)
	Max. Switching Freq.	20 kHz
	Fundamental Frequency	Line/Load - 50/60 Hz
	Temperature Rise	135 degrees C average
	Dielectric Strength	3,000 Volts rms (4,243 volts peak)
	Inductance Curve (Typical)	100% at 100% current 100% at 150% current 50% at 350% current (minimum)
	Inductance Tolerance	±10%
	Insulation System	Class N (200 degrees C)
	Impregnation	High bond strength solventless epoxy, 200 degrees C, UL94HB recognized
Environmental	Ambient Temperature	45 degrees C (maximum)
	Altitude	1000 meters (3280 feet)
Agency Approvals	UL-508	File E180243 Component Listed (1-2400 amps) File E180243 UL Listed NEMA Type 1 units (1-2400 amps) Note: Short Circuit rating not required under Exception No.1 of UL508A SB4.2.1 effective 4/25/06
	CSA C22.2, Class N, 200 °C	File LR29753-13 CSA Certified (1 amp - 2400 amps) File E66214, Type 200-18, UL Recognized Insulation System
	CE	TUV certified to EN61558-2-20:2000

Termination

Allen-Bradley reactors rated 45 Amps (fundamental) and below are supplied with an integral mounted terminal block. Reactors rated from 55 to 160 Amps (fundamental) are supplied with box lugs. Reactors rated 200 to 400 Amps (fundamental) will be supplied with front facing copper tabs. Above 400 Amps (fundamental), side facing copper tabs are used. The "3R" and "3RA" designations for the 1321 line reactors indicate the following: 3R = Open Enclosure Line Reactor and 3RA = NEMA 1 Enclosure Line Reactor.

Typical Termination Types and Specifications

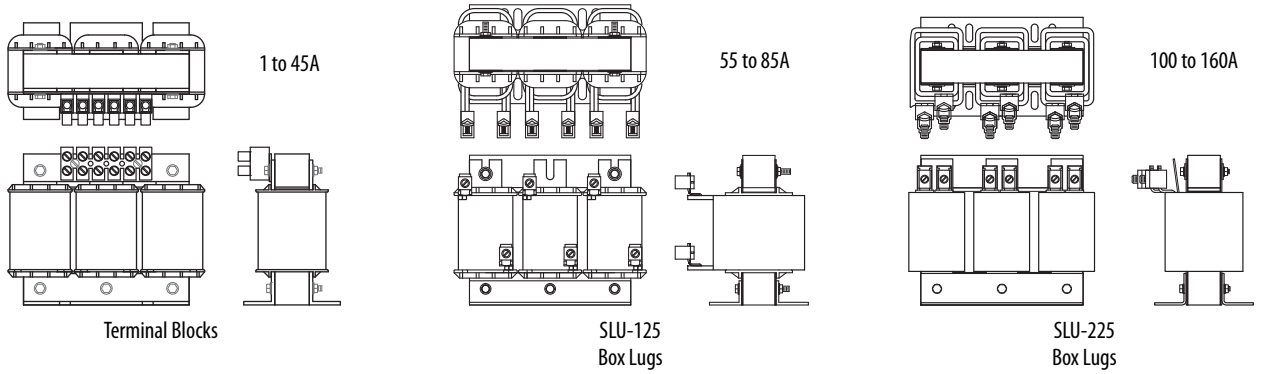

Reactor Catalog Number		Termination	Max./Min. Wire Size	Max. Torque
IP00 (Open) or IP20	IP11 (NEMA/UL Type 1)	Type	mm^2 (AWG)	Nm (lb.-in.)
1321-3R1-A to 1321-3R8-D	1321-3RA1-A to 1321-3RA8-D	20A Terminal Block	2.1/0.3 (14/22)	0.51 (4.5)
1321-3R12-A to 1321-3R35-B	1321-3RA12-A to 1321-3RA35-B	65A Terminal Block	16.0/0.3 (5/22)	1.81 (16)
1321-3R35-C to 1321-3R45-C	1321-3RA35-C to 1321-3RA45-C	85A Terminal Block	21.2/0.8 (4/18)	2.26 (20)
1321-3R55-A to 1321-3R80-C	1321-3RA55-A to 1321-3RA80-C	SLU-125 Box Lug	50.0/10.0 (0/6)	5.09 (45)
1321-3R100-A to 1321-3R160-C	1321-3RA100-A to 1321-3RA160-C	SLU-225 Box Lug	120.0-27.0 (0000/2)	16.95 (150)

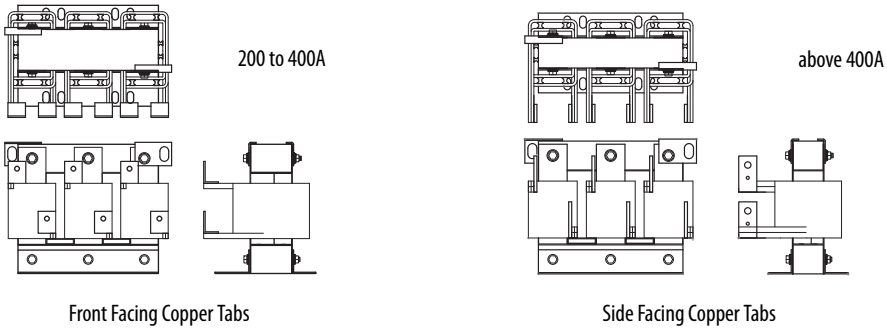

Reactor Catalog Number		Termination	Contact Surface (H x W)	Hole Diameter	Thickness
IP00 (Open) or IP20	IP11 (NEMA/UL Type 1)	Type	mm (in.)	mm (in.)	mm (in.)
1321-3R200-A to 1321-3R200-C	1321-3RA200-A to 1321-3RA200-C	Front Facing Copper Tab	41.3 x 25.4 (1.63 x 1.0)	10.36 (0.408)	3.18 (0.125)
1321-3R250-B to 1321-3RB250-C	1321-3RAB250-A to 1321-3RAB250-C	Front Facing Copper Tab	57.2 x 19.1 (2.25 x 0.75)	10.31 (0.406)	4.75 (0.187)
1321-3RB320-A to 1321-3R400-A	1321-3RAB320-A to 1321-3RA400-A	Front Facing Copper Tab	44.5 x 38.1 (1.75 x 1.5)	10.31 (0.406)	3.18 (0.125)
1321-3R500-A	1321-3RA500-A	Side Facing Copper Tab	44.5 x 38.1 (1.75 x 1.5)	10.31 (0.406)	3.18 (0.125)
1321-3R500-B to 1321-3R500-C	–	Front Facing Copper Tab	76.2 x 38.1 (3.00 x 1.5)	13.49 & 6.35 (0.531 & 0.25)	6.35 (0.25)
–	1321-3RA500-B	Side Facing Copper Tab	44.5 x 38.1 (1.75 x 1.5)	10.31 (0.406)	3.18 (0.125)

Mounting Dimensions and Weights

IMPORTANT The dimensions and weights provided on the following pages are for estimating purposes only. Conduit entry locations for floor mounted enclosures are the responsibility of the installer. Contact your Allen-Bradley Sales Office if certified drawings are required for planning and installation.

IP11 (NEMA/UL Type 1)

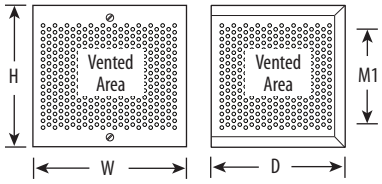

Cabinet 1 – Wall Mounted

Catalog Number 1321- …	Unit	Dimensions in mm (in.) and Weights in kg (lbs.)				
		H	W	D	M1	Weight (Cabinet Only)
3RA1-A to 3RA18-B	Cabinet 1	203 (8.0)	203 (8.0)	152 (6.0)	140 (5.5)	3.2 (7)

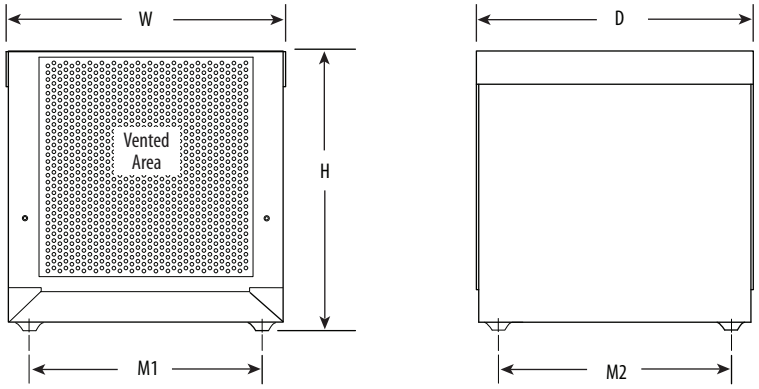

Cabinet 2 – Floor Mounted

Catalog Number 1321- …	Unit	Dimensions in mm (in.) and Weights in kg (lbs.)					
		H	W	D	Feet M1	Feet M2	Weight (Cabinet Only)
3RA18-C to 3RAB250-A	Cabinet 2	330 (13.0)	336 (13.2)	332 (13.1)	279 (11.0)	279 (11.0)	8.2 (18)

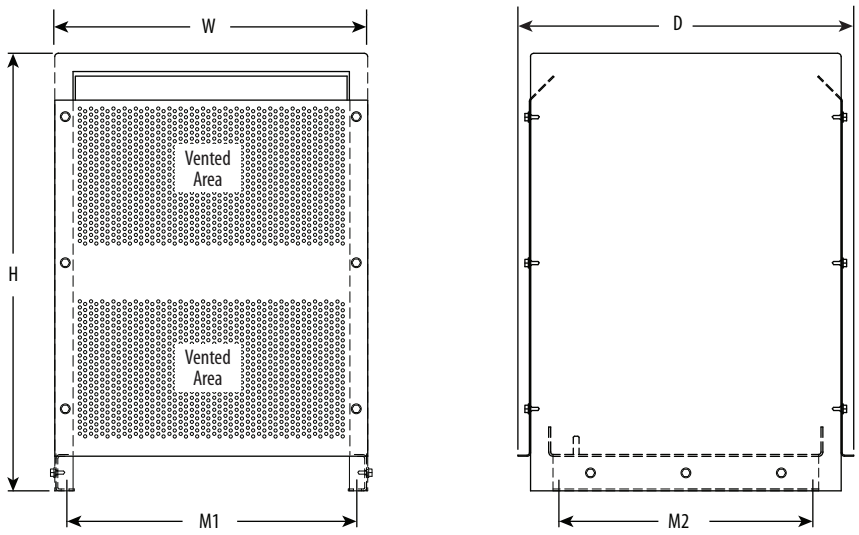

Cabinet 3 – Floor Mounted

Catalog Number 1321- …	Unit	Dimensions in mm (in.) and Weights in kg (lbs.)					
		H	W	D	Feet M1	Feet M2	Weight (Cabinet Only)
3RA250-B to 3RA500-A	Cabinet 3	610 (24.0)	429 (16.9)	467 (18.4)	406 (16.0)	343 (13.5)	12.2 (27)

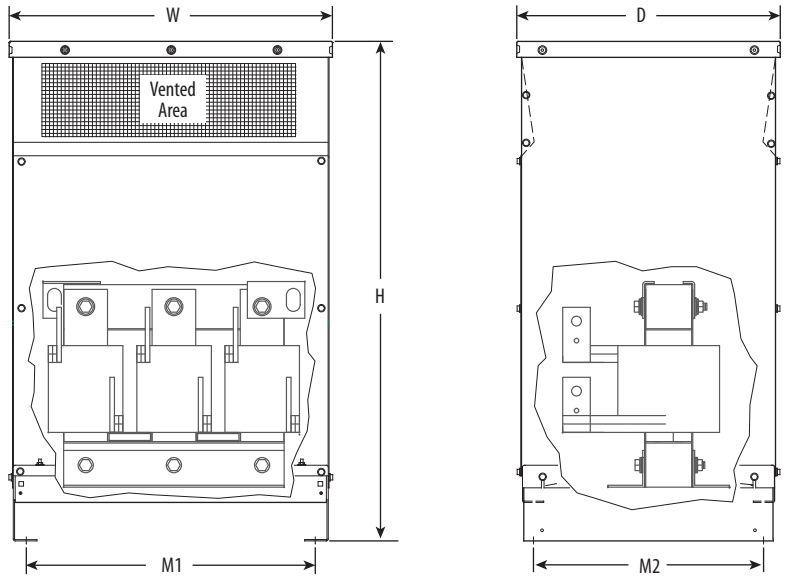

Cabinets 4 & 5 – Floor Mounted

Catalog Number 1321- …	Unit	Dimensions in mm (in.) and Weights in kg (lbs.)					
		H	W	D	Feet M1	Feet M2	Weight (1) (Cabinet Only)
3RA500-B to 3RA600-C	Cabinet 4	1194 (47.0)	674 (26.6)	633 (24.9)	592 (23.3)	552 (21.8)	72.1 (159)
3RA750-A to 3RA850-B 3RA850-C to 3RA1000-C	Cabinet 5	1194 (47.0)	776 (30.6)	633 (24.9)	694 (27.3)	552 (21.8)	72.1 (159)

(1) For total weight - add enclosure weight to specific reactor weight.

IP00/Open

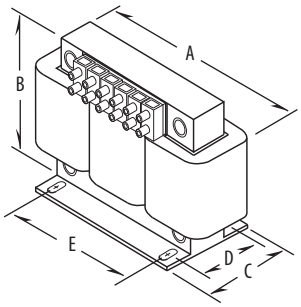

IP00 /Open, 45 Amps (fundamental) and Below

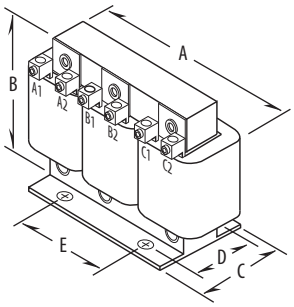

IP00/Open, 80 Amps (fundamental) and Above

Sizing Guidelines

Fundamental amps are used for sizing the reactor to be equal to or slightly higher than the total motor FLA. Sizing reactors to drive ampere ratings alone may result in mis-sizing the reactor.

Catalog Number	Fundamental Amps	Inductance - mH (Based on Fundamental Amps)	Watts Loss	Dimensions in mm (in.) and Weight in kg (lbs.)					
				A	B	C	D[1]	E	Weight
1321-3R1-A	1	100.0	14	112 (4.40)	104 (4.10)	79 (3.10)	60 (2.35)	37 (1.44)	1.8 (4)
1321-3R1-B		50.0	14.8	112 (4.40)	104 (4.10)	71 (2.80)	50 (1.98)	37 (1.44)	1.8 (4)
1321-3R1-C		36.0	12	112 (4.40)	104 (4.10)	71 (2.80)	50 (1.98)	37 (1.44)	1.4 (3)
1321-3R1-D		18.0	5	112 (4.40)	104 (4.10)	71 (2.80)	50 (1.98)	37 (1.44)	1.4 (3)
1321-3R2-A	2	12.0	7.5	112 (4.40)	104 (4.10)	71 (2.80)	50 (1.98)	37 (1.44)	1.8 (4)
1321-3R2-B		20.0	11.3	112 (4.40)	104 (4.10)	71 (2.80)	50 (1.98)	37 (1.44)	1.8 (4)
1321-3R2-C		32.0	16	112 (4.40)	104 (4.10)	71 (2.80)	50 (1.98)	37 (1.44)	1.8 (4)
1321-3R2-D		6.0	10.7	112 (4.40)	104 (4.10)	64 (2.50)	44 (1.73)	37 (1.44)	1.4 (3)
1321-3R4-A	4	3.0	14.5	112 (4.40)	104 (4.10)	71 (2.80)	50 (1.98)	37 (1.44)	1.8 (4)
1321-3R4-B		6.5	20	112 (4.40)	104 (4.10)	71 (2.80)	50 (1.98)	37 (1.44)	1.8 (4)
1321-3R4-C		9.0	20	112 (4.40)	104 (4.10)	86 (3.40)	60 (2.35)	37 (1.44)	2.3 (5)
1321-3R4-D		12.0	21	112 (4.40)	104 (4.10)	86 (3.40)	66 (2.60)	37 (1.44)	2.7 (6)
1321-3R8-A	8	1.5	19.5	152 (6.00)	121 (4.75)	76 (3.00)	53 (2.10)	51 (2.00)	3.2 (7)
1321-3R8-B		3.0	29	152 (6.00)	121 (4.75)	76 (3.00)	53 (2.10)	51 (2.00)	3.6 (8)
1321-3R8-C		5.0	25.3	152 (6.00)	121 (4.75)	86 (3.40)	67 (2.62)	51 (2.00)	5.0 (11)
1321-3R8-D		7.5	28	152 (6.00)	121 (4.75)	86 (3.40)	63 (2.48)	51 (2.00)	5.9 (13)
1321-3R12-A	12	1.25	26	152 (6.00)	127 (5.00)	84 (3.30)	53 (2.10)	51 (2.00)	4.1 (9)
1321-3R12-B		2.5	31	152 (6.00)	127 (5.00)	84 (3.30)	53 (2.10)	51 (2.00)	4.5 (10)
1321-3R12-C		4.2	41	152 (6.00)	127 (5.00)	99 (3.90)	70 (2.75)	51 (2.00)	8.2 (18)
1321-3R18-A	18	0.8	36	152 (6.00)	135 (5.30)	81 (3.20)	53 (2.10)	51 (2.00)	4.1 (9)
1321-3R18-B		1.5	43	152 (6.00)	135 (5.30)	89 (3.50)	63 (2.48)	51 (2.00)	5.5 (12)
1321-3R18-C		2.5	43	206 (8.10)	155 (6.10)	102 (4.00)	66 (2.60)	76 (3.00)	7.3 (16)
1321-3R25-A	25	0.5	48	183 (7.20)	147 (5.80)	89 (3.50)	60 (2.35)	76 (3.00)	5.0 (11)
1321-3R25-B		1.2	52	183 (7.20)	147 (5.80)	89 (3.50)	60 (2.35)	76 (3.00)	6.4 (14)
1321-3R25-C		2.0	61	183 (7.20)	147 (5.80)	109 (4.30)	79 (3.10)	76 (3.00)	9.1 (20)
1321-3R35-A	35	0.4	49	183 (7.20)	147 (5.80)	102 (4.00)	66 (2.60)	76 (3.00)	6.4 (14)
1321-3R35-B		0.8	54	183 (7.20)	147 (5.80)	102 (4.00)	70 (2.75)	76 (3.00)	7.3 (16)
1321-3R35-C		1.2	54	229 (9.00)	188 (7.40)	119 (4.70)	80 (3.16)	76 (3.00)	14.0 (30)

continued

Catalog Number	Fundamental Amps	Inductance - mH (Based on Fundamental Amps)	Watts Loss	Dimensions in mm (in.) and Weight in kg (lbs.)					
				A	B	C	D[1]	E	Weight
1321-3R45-A	45	0.3	54	229 (9.00)	188 (7.40)	119 (4.70)	80 (3.16)	76 (3.00)	10.0 (22)
1321-3R45-B		0.7	62	229 (9.00)	188 (7.40)	119 (4.70)	80 (3.16)	76 (3.00)	13.0 (28)
1321-3R45-C		1.2	65	229 (9.00)	185 (7.30)	135 (5.30)	93 (3.66)	76 (3.00)	18.0 (39)
1321-3R55-A	55	0.25	64	229 (9.00)	185 (7.30)	135 (5.30)	80 (3.16)	76 (3.00)	11.0 (24)
1321-3R55-B		0.5	67	229 (9.00)	178 (7.00)	135 (5.30)	80 (3.16)	76 (3.00)	12.0 (26)
1321-3R55-C		0.85	71	229 (9.00)	178 (7.00)	152 (6.00)	99 (3.91)	76 (3.00)	16.0 (35)
1321-3R80-A	80	0.2	82	229 (9.00)	183 (7.20)	160 (6.30)	88 (3.47)	92 (3.63)	11.3 (25)
1321-3R80-B		0.4	86	229 (9.00)	183 (7.20)	165 (6.50)	88 (3.47)	92 (3.63)	14.9 (33)
1321-3R80-C		0.7	96	274 (10.80)	216 (8.50)	173 (6.80)	106 (4.16)	92 (3.63)	28.0 (61)
1321-3R100-A	100	0.15	94	229 (9.00)	185 (7.30)	165 (6.50)	84 (3.30)	92 (3.63)	13.1 (29)
1321-3R100-B		0.3	84	229 (9.00)	185 (7.30)	173 (6.80)	93 (3.66)	92 (3.63)	16.8 (37)
1321-3R100-C		0.45	108	274 (10.80)	210 (8.30)	156 (6.20)	106 (4.16)	92 (3.63)	34.0 (74)
1321-3R130-A	130	0.1	108	229 (9.00)	178 (7.00)	118 (4.70)	80 (3.16)	76 (3.00)	13.1 (29)
1321-3R130-B		0.2	180	229 (9.00)	183 (7.20)	173 (6.80)	93 (3.66)	92 (3.63)	19.5 (43)
1321-3R130-C		0.3	128	279 (11.00)	216 (8.50)	156 (6.20)	106 (4.16)	92 (3.63)	29.0 (64)
1321-3R160-A	160	0.075	116	229 (9.00)	183 (7.20)	173 (6.80)	80 (3.16)	92 (3.63)	18.6 (41)
1321-3R160-B		0.15	149	274 (10.80)	211 (8.30)	152 (6.00)	88 (3.47)	92 (3.63)	23.0 (50)
1321-3R160-C		0.23	138	292 (11.50)	216 (8.50)	229 (9.00)	119 (4.69)	92 (3.63)	30.0 (67)
1321-3R200-A	200	0.055	124	229 (9.00)	191 (7.50)	185 (7.30)	106 (4.16)	76 (3.00)	17.2 (38)
1321-3R200-B[1]		0.110	168	229 (9.00)	191 (7.50)	211 (8.30)	112 (4.41)	76 (3.00)	24.5 (54)
1321-3R200-C[1]		0.185	146	274 (10.80)	211 (8.30)	254 (10.00)	150 (5.91)	92 (3.63)	45.4 (100)
1321-3RB250-A[1]	250	0.045	154	229 (9.00)	191 (7.50)	229 (9.00)	106 (4.19)	76 (3.00)	21.3 (47)
1321-3RB250-B[1]		0.090	231	274 (10.80)	216 (8.50)	229 (9.00)	131 (5.16)	117 (4.60)	36.3 (80)
1321-3RB250-C[1]		0.150	219	366 (14.40)	284 (11.20)	262 (10.30)	148 (5.82)	117 (4.60)	57.0 (125)
1321-3RB320-A[1]	320	0.040	224	274 (10.80)	229 (9.00)	211 (8.30)	131 (5.16)	117 (4.60)	36.3 (80)
1321-3RB320-B[1]		0.075	264	274 (10.80)	229 (9.00)	254 (10.00)	149 (5.88)	117 (4.60)	46.3 (102)
1321-3RB320-C[1]		0.125	351	366 (14.40)	286 (11.30)	267 (10.50)	181 (7.13)	117 (4.60)	72.6 (160)
1321-3RB400-A[1]	400	0.030	231	274 (10.80)	254 (10.00)	254 (10.00)	131 (5.16)	117 (4.60)	38.1 (84)
1321-3RB400-B[1]		0.060	333	381 (15.00)	286 (11.30)	292 (11.50)	172 (6.76)	117 (4.60)	53.5 (118)
1321-3RB400-C[1]		0.105	293	366 (14.40)	286 (11.30)	318 (12.50)	184 (7.26)	117 (4.60)	67.6 (149)
1321-3R500-A[1]	500	0.025	266	274 (10.80)	229 (9.00)	267 (10.50)	140 (5.50)	117 (4.60)	42.2 (93)
1321-3R500-B[1]		0.050	340	366 (14.40)	292 (11.50)	292 (11.50)	172 (6.76)	117 (4.60)	53.5 (118)
1321-3R500-C[1]		0.085	422	366 (14.40)	292 (11.50)	338 (13.30)	248 (9.76)	117 (4.60)	95.3 (210)
1321-3R600-A[1]	600	0.020	307	366 (14.40)	292 (11.50)	254 (10.00)	134 (5.26)	117 (4.60)	54.4 (120)
1321-3R600-B[1]		0.040	414	366 (14.40)	286 (11.30)	305 (12.00)	203 (8.00)	117 (4.60)	79.4 (175)
1321-3R600-C[1]		0.065	406	366 (14.40)	286 (11.30)	381 (15.00)	235 (9.26)	117 (4.60)	122.5 (270)
1321-3R750-A[1]	750	0.015	427	366 (14.40)	292 (11.50)	279 (11.00)	168 (6.63)	183 (7.20)	63.5 (140)
1321-3R750-B[1]		0.029	630	366 (14.40)	292 (11.50)	318 (12.50)	204 (8.01)	183 (7.20)	86.2 (190)
1321-3R750-C[1]		0.048	552	366 (14.40)	368 (14.50)	356 (14.00)	235 (9.26)	183 (7.20)	120.2 (265)
1321-3R750-E[1]		0.060	810	366 (14.40)	368 (14.50)	381 (15.00)	276 (10.88)	183 (7.20)	147.4 (325)
1321-3R850-A[1]	850	0.015	799	451 (17.80)	394 (15.50)	368 (14.50)	191 (7.50)	183 (7.20)	88.0 (195)
1321-3R850-B[1]		0.027	756	451 (17.80)	394 (15.50)	394 (15.50)	208 (8.20)	183 (7.20)	98.0 (215)
1321-3R850-C[1]		0.042	758	451 (17.80)	400 (15.80)	445 (17.50)	208 (8.20)	183 (7.20)	143.0 (315)
1321-3R1000-B[1]	1000	0.022	964	514 (20.25)	425 (16.80)	330 (13.00)	216 (8.50)	183 (7.20)	185.0 (408)
1321-3R1000-C[1]		0.038	960	514 (20.25)	425 (16.80)	381 (15.00)	273 (10.76)	183 (7.20)	267.2 (589)

(1) Removable lifting rings are supplied with the unit.

1321 Reflective Wave Reduction (RWR) Devices

Description of Reflected Wave Phenomenon

The inverter section of a drive does not produce sinusoidal voltage, but rather a series of voltage pulses created from the DC bus. These pulses travel down the motor cables to the motor and then reflected back to the drive. The reflection is dependant on the rise time of the drive output voltage, cable characteristics, cable length and motor impedance. If the voltage reflection is combined with another subsequent pulse, peak voltages can be at a destructive level. A single IGBT drive output may have reflected wave transient voltage stresses of up to twice (2 pu or per unit) the DC bus voltage between its own output wires. Multiple drive output wires in a single conduit or wire tray further increase output wire voltage stress between multi-drive output wires that are touching. Drive #1 may have a (+) 2 pu stress while drive #2 may simultaneously have a (–) 2 pu stress.

Refer to the Wiring & Grounding Guidelines for PWM Drives (publication DRIVES-IN001) for details.

Applying RWR Devices

At the Output of the Drive

In long motor lead applications, an Allen-Bradley 1321 RWR located between the drive and motor helps to reduce dv/dt and motor terminal peak voltages. The use of an RWR device also helps protect the drive from surge currents caused by rapid changes in the load.

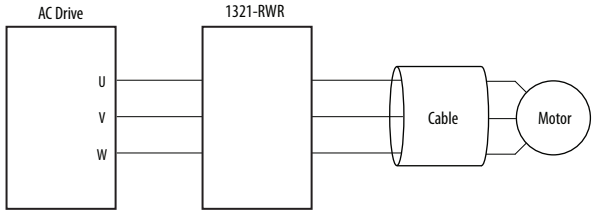

- Protect Motors from Long Lead Effects
- Reduce Output Voltage dv/dt
- Extend Semiconductor Life
- Reduce Surge Currents
- Reduce Motor Temperature
- Reduce Audible Motor Noise

Motor Protection

Allen-Bradley Reflective Wave Reduction devices can help protect motors from high peak voltages.

For IGBT drive applications with long drive-to-motor lead lengths, Allen-Bradley RWR devices can help protect against fast dv/dt rise times.

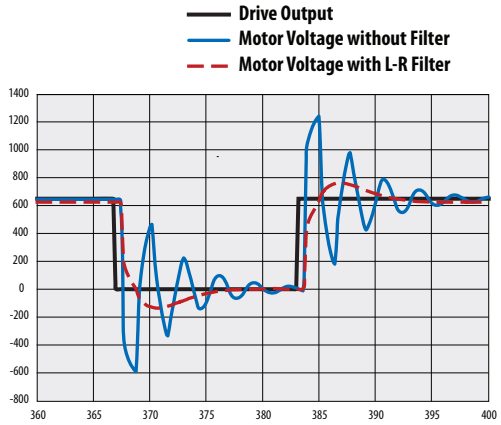

Catalog Number Explanation

IMPORTANT 1321-RWR products replace existing 1204-RWR products. However, 1204-RWRC modules (RWR and Common Mode Choke assembly) are still available.

Position	1-8	9	11	12
	1321 – RWR	8	– D	P
	a	b	c	d

a

Product	
Code	Type
1321-RWR	Reflective Wave Reduction Device

b1

Rating	
400-480V ac	
Code	Fundamental Amps
8	8
12	12
18	18
25	25
35	35
45	45
55	55
80	80
100	100
130	130
160	160
200	200
250	250
320	320

b2

Rating	
600V ac	
Code	Fundamental Amps
8	8
12	12
18	18
25	25
35	35
45	45
55	55
80	80
100	100
130	130
160	160
200	200
250	250

c

Voltage Rating	
Code	Voltage
D	400/480V ac
E	600V ac

d

Enclosure	
Code	Description
P	Panel Mount
A	NEMA/UL Type 1 ∗
W	NEMA/UL Type 3R ∗

∗ Not available

Specifications

Specification		Rating
Material	Enclosures	IP00 (Open)
	Terminations	1-45 Amp (fundamental) Ratings – Finger guard IP20 terminal block
		80-160 Amp (fundamental) Ratings – Solid copper box lugs
		200-400 Amp (fundamental) Ratings – Copper tab terminals
		401 Amps and Above – Copper tab terminals
Harmonic Compensation	All line reactors are compensated for the additional currents and high frequencies caused by the presence of harmonics	
General Protection	Impedance	3%
	Overload Rating	300% of fundamental current for (1) minute
IGBT Protection	First turn triple insulated offering protection up to 16kV	16,000 Volts per Microsecond dv/dt Protection 20 kHz Maximum Switching Frequency
Electrical	Max. Rated Voltage	600V AC, 50/60 Hz frequency
	Max. Switching Freq.	4 kHz
	Temperature Rise	115 degrees C.
	Dielectric Strength	4,000 Volts rms (5,600 volts peak)
	Inductance Curve	100% at 100% current, 100% at 150% current, 50% at 350% current
	Insulation System	Class H (180 degrees C or better)
	Impregnation	High bond strength epoxy impregnation, 4,000V high dielectric strength
Environmental	Ambient Temperature	45 degrees C.
	U.L. Listed	UL-508 - IP00, IP20, and IP11
	International	Conforms to VDE 0550
	CE	Not certified

Termination

Allen-Bradley 1321 RWR devices rated 45 Amps (fundamental) and below are supplied with an integral mounted terminal block. Devices rated from 55 to 160 Amps (fundamental) are supplied with box lugs. Devices rated 200 to 400 Amps (fundamental) can be supplied with box lugs or copper tabs. Above 400 Amps (fundamental), solid copper tabs are used.

Approximate Dimensions, Weights, Wire Size and Terminal Blocks

The dimensions and weights provided on the following page is for estimating purposes only. Contact your Allen-Bradley Sales Office if certified drawings are required for planning and installation.

RWR Catalog No. x = D (400V), E (600V)	Fund. Amps	Cont. Amps	Wire Size	Watts Loss		Figure (see page 15)	Dimensions *mm (in.)*					Weight
			mm^2 (AWG)	400V	600V		A	B	C	D	E	kg (lbs.)
1321-RWR8-xP	8	12	2.5-4.0 (14-12)	389	536	1	282.6 (11.13)	298.5 (11.75)	171.5 (6.75)	7.4 (0.29)	7.4 x 11.6 (0.29 x 0.46)	4.8 (10.5)
1321-RWR12-xP	12	18	2.5-4.0 (14-12)	391	406	1	282.6 (11.13)	298.5 (11.75)	174.6 (6.88)	7.4 (0.29)	7.4 x 11.6 (0.29 x 0.46)	5.7 (12.5)
1321-RWR18-xP	18	27	2.5-4.0 (14-12)	403	551	1	282.6 (11.13)	298.5 (11.75)	174.6 (6.88)	7.4 (0.29)	7.4 x 11.6 (0.29 x 0.46)	7.3 (16)
1321-RWR25-xP	25	37.5	6.0 (10)	412	562	1	282.6 (11.13)	298.5 (11.75)	193.7 (7.63)	7.4 (0.29)	7.4 x 11.6 (0.29 x 0.46)	7.7 (17)
1321-RWR35-xP	35	52.5	10.0-16.0 (8-6)	414	429	1	282.6 (11.13)	298.5 (11.75)	193.7 (7.63)	7.4 (0.29)	7.4 x 11.6 (0.29 x 0.46)	8.8 (19.5)
1321-RWR45-xP	45	67.5	16.0 (6)	422	572	2	319.1 (12.56)	392.1 (15.44)	158.8 (6.25)	10.5 (0.41)	10.3 x 17.9 (0.41 x 0.70)	17.5 (38.5)
1321-RWR55-xP	55	82.5	25.0 (4)	427	577	2	320.7 (12.63)	392.1 (15.44)	158.8 (6.25)	10.5 (0.41)	10.3 x 17.9 (0.41 x 0.70)	18.4 (40.5)
1321-RWR80-xP	80	120	35.0-50.0 (2-1/0)	446	341	2	322.3 (12.69)	395.3 (15.56)	177.8 (7.00)	10.5 (0.41)	10.3 x 17.9 (0.41 x 0.70)	20.4 (45)
1321-RWR100-xP	100	150	50.0-70.0 (1/0-2/0)	444	339	2	320.7 (12.63)	393.7 (15.50)	187.3 (7.38)	10.5 (0.41)	10.3 x 17.9 (0.41 x 0.70)	22.5 (49.5)
1321-RWR130-xP	130	195	70.0-120.0 (2/0-4/0)	630	495	2	317.5 (12.50)	390.5 (15.38)	187.3 (7.38)	10.5 (0.41)	10.3 x 17.9 (0.41 x 0.70)	24.5 (54)
1321-RWR160-xP	160	240	120.0 (4/0)	599	464	3	355.6 (14.00)	438.2 (17.25)	250.8 (9.88)	10.5 (0.41)	10.3 x 25.8 (0.41 x 1.02)	30.8 (68)
1321-RWR200-xP	200	300	120.0-185.0 (4/0-350 MCM)	618	612	2	317.5 (12.50)	393.7 (15.50)	214.3 (8.44)	10.5 (0.41)	10.3 x 17.9 (0.41 x 0.70)	29.9 (66)
1321-RWR250-xP	250	375	185.0 (350 MCM)	681	546	3	358.8 (14.13)	439.8 (17.31)	225.4 (8.88)	10.5 (0.41)	10.3 x 25.8 (0.41 x 1.02)	41.7 (92)
1321-RWR320-DP	320	480	240.0 (500 MCM)	489	NA	3	358.8 (14.13)	438.2 (17.25)	250.8 (9.88)	10.5 (0.41)	10.3 x 25.8 (0.41 x 1.02)	52.2 (115)

1321-RWR Assembly Components

400/480V

Reactor	Resistor Ohms	Resistor Watts	Wire Size (AWG)
1321-3R8-B	50	250	14-12
1321-3R12-B	50	250	14-12
1321-3R18-B	50	250	14-12
1321-3R25-B	50	250	10
1321-3R35-B	50	250	8-6
1321-3R45-B	50	250	6
1321-3R55-B	50	250	4
1321-3R80-B	50	250	2-1/0
1321-3R100-B	50	250	1/0-2/0
1321-3R130-B	50	300	2/0-4/0
1321-3R160-B	50	300	4/0
1321-3R200-B	50	300	4/0-350 MCM
1321-3RB250-B	50	300	350 MCM
1321-3R320-B	50	300	500 MCM

600V

Reactor	Resistor Ohms	Resistor Watts	Wire Size (AWG)
1321-3R8-B	50	375	14-12
1321-3R12-B	50	375	14-12
1321-3R18-B	50	375	14-12
1321-3R25-B	50	375	10
1321-3R35-B	50	375	8-6
1321-3R45-B	50	375	6
1321-3R55-B	50	375	4
1321-3R80-B	50	375	2-1/0
1321-3R100-B	50	375	1/0-2/0
1321-3R130-B	50	420	2/0-4/0
1321-3R160-B	50	420	4/0
1321-3R200-B	50	420	4/0-350 MCM
1321-3RB250-B	50	420	350 MCM

Dimension Reference

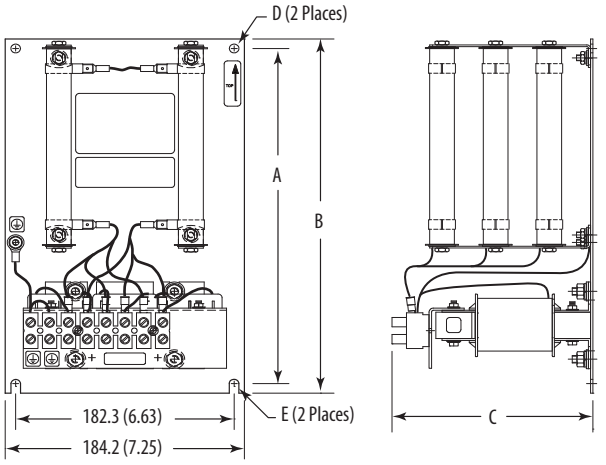

Figure 1

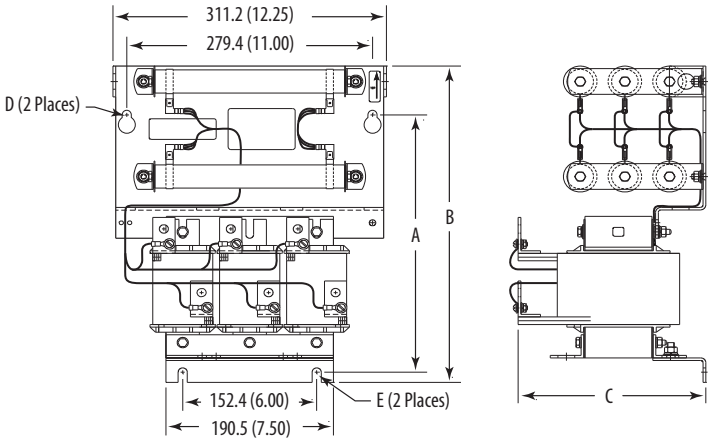

Figure 2

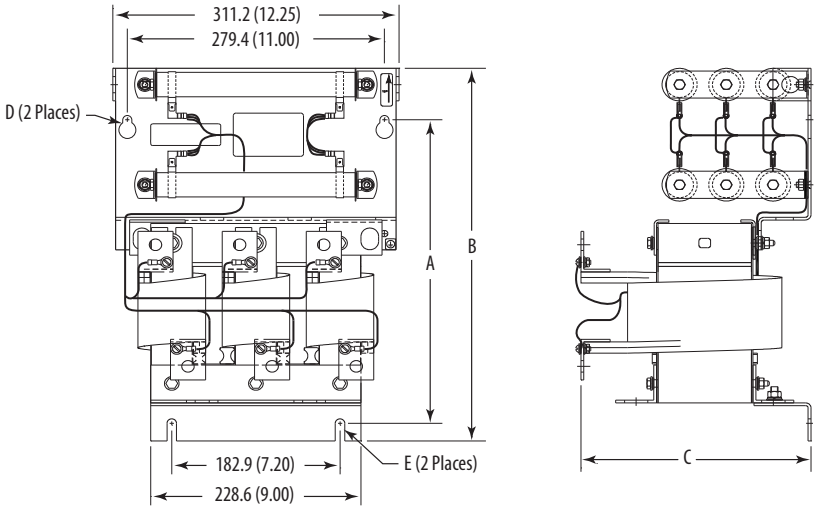

Figure 3

Terminal Block Details

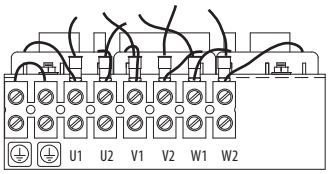

Figure 1

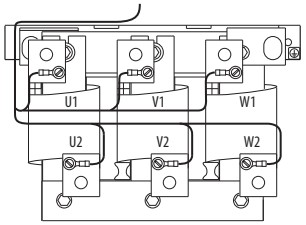

Figures 2 & 3

1321-3TH/3TW Series Three-Phase Isolation Transformers

Allen-Bradley 1321 Isolation Transformers are designed to meet the standard horsepower, voltage ratings and harmonics of the Allen-Bradley variable speed drives.

Catalog Number Explanation

Position	1-4	6	7	8	9	11	12
	1321	– 3	T	W	005	– A	A
	a	b	c	d	e	f	g

a

Product	
Code	Type
1321	Power Component

b

Phases	
Code	Description
3	Three-Phase

c

Device	
Code	Description
T	Transformer

d

Mounting	
Code	Description
W	Wall
H	Floor

e

Rating	
Code	kVA
005	5
007	7.5
011	11
014	14
020	20
027	27
034	34
040	40
051	51
063	63
075	75
093	93
118	118
145	145
175	175
220	220
275	275
330	330
440	440
550	550
660	660
770	770
880	880

f

Primary Voltage	
Code	Voltage
A	230V ac
B	460V ac
C	575V ac
X	208V ac

g

Secondary Voltage	
Code	Voltage
A	230V ac
B	460V ac
C	575V ac
X	208V ac

Specifications

Specification		Rating
Electrical	General	Delta primary, wye secondary, 60 Hz, Aluminum wound, Neutral terminal available for customer use
	Standard Voltage Taps	5.0-175 kVA 1-5.0% FCAN & FCBN
		220-880 kVA 1-2.5% FCAN & FCBN
	Insulation System	Class 220
		150 degrees C Rise Over 40 degrees C Ambient
		Peak 40 degrees C Ambient with 30 degrees C 24 Hour Avg.
	Efficiency	98% (2% losses)
Environmental	Elevation	Up to 1,000 Meters. Above 1,000 Meters, consult factory for derating
	U.L. Listed	File E112313
Construction	Enclosure	NEMA/UL Type 3R (IP32)
		Heavy duty ventilated enclosure with metal screens protecting all vents and finished in ANSI 61 grey
	Termination	Transformers up to 75kVA have integral high and low voltage lugs installed, suitable for copper or aluminum cable installation
	Conduit Entry	Standard knockouts on all enclosures
	Mounting	5-51 kVA units suitable for either floor or wall mounting. 63-75 kVA units suitable for floor, wall or ceiling mounting with mounting kit 1321-3TWM2 (Style NH3). Larger units are floor mount only
General	Impedance	4-6% impedance (nominal)
	Short Circuit Capability	Meets UL short circuit withstand capability
	Overload Rating	Windings designed to withstand overcurrent of 150% of rated load for 60 Seconds or 200% of rated load for 30 Seconds
	Duty Cycle	(1) start every (2) hours
	Thermostats	Thermostats with 1 N.C contact in each coil, wired in series and integral on all units
	K Factor	4
	Custom Options (consult factory for operating information)	50 Hz units
		Electrostatic shield (60dB attenuation typical)
		NEMA/UL Type 2 or IP20 (NEMA/UL Type 1)
		Core and coil construction (open)
		Additional HP or kVA sizes, voltages, extra primary taps, copper wound units, etc.

Approximate Mounting Dimensions

IP32, NEMA/UL Type 3R - Styles NH3 through NH4

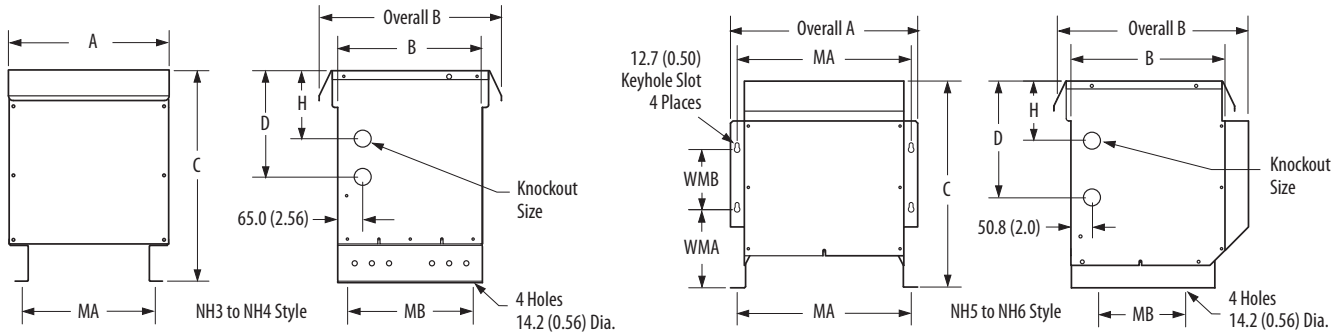

Dimensions in mm (in.)

Style	A	Overall A	B	Overall B	C	D	H	K	MA	MB	WMB	WMA
NH3	660.4 (26.00)	–	533.4 (21.00)	635.0 (25.00)	66.0 (38.00)	609.6 (24.00)	355.6 (14.00)	50.8 x 76.2 (2.00 x 3.00)	546.1 (21.50)	482.6 (19.00)	–	–
NH4	812.8 (32.00)	–	647.7 (25.50)	749.3 (29.50)	68.0 (41.00)	609.6 (24.00)	304.8 (12.00)	50.8 x 76.2 (2.00 x 3.00)	596.9 (23.50)	596.9 (23.50)	–	–
NH5 (1)	425.5 (16.75)	492.8 (19.40)	381.0 (15.00)	513.1 (20.20)	546.1 (21.50)	304.8 (12.00)	152.4 (6.00)	35.1 x 44.4 (1.38 x 1.75)	457.2 (18.00)	228.6 (9.00)	177.8 (7.00)	184.4 (7.26)
NH6 (1)	546.1 (21.50)	607.1 (23.90)	495.3 (19.50)	730.3 (28.75)	730.3 (28.75)	431.8 (17.00)	215.9 (8.50)	35.1 x 44.4 (1.38 x 1.75)	577.9 (22.75)	228.6 (9.00)	203.2 (8.00)	247.1 (9.73)

(1) Enclosure Styles NH1 and NH2 are replaced by NH5 and NH6 through 1321-3TH005 - 1321-3TH051 ratings.

IP32, NEMA/UL Type 3R -Styles NJ1 through NJ6

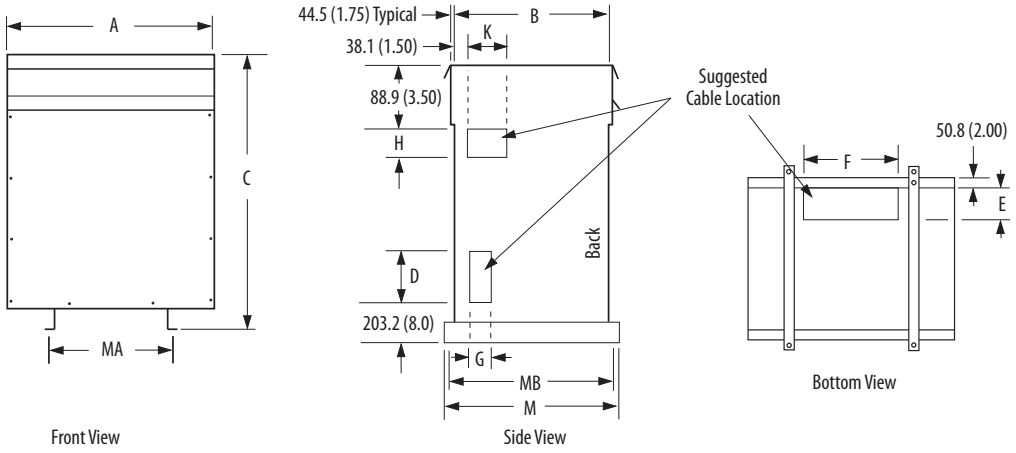

Dimensions in mm (in.)

Style	A	B	C	D	E	F	G	H	K	M	MA	MB
NJ1	1003.3 (39.50)	762.0 (30.00)	1308.1 (51.50)	254.0 (10.00)	190.5 (7.50)	546.1 (21.50)	203.2 (8.00)	165.1 (6.50)	342.9 (13.50)	863.6 (34.00)	609.6 (24.00)	812.8 (32.00)
NJ2	1239.1 (48.50)	836.6 (34.00)	1498.6 (59.00)	330.2 (13.00)	215.9 (8.50)	635.0 (25.00)	228.6 (9.00)	215.9 (8.50)	393.7 (15.50)	965.2 (38.00)	698.5 (27.50)	914.4 (36.00)
NJ3	1308.1 (51.50)	990.6 (39.00)	1676.4 (66.00)	406.4 (16.00)	241.3 (9.50)	800.1 (31.50)	254.0 (10.00)	292.1 (11.50)	457.2 (18.00)	1092.2 (43.00)	863.6 (34.00)	1041.4 (41.00)
NJ6	1625.6 (64.00)	1016.0 (40.00)	1727.2 (68.00)	406.4 (16.00)	266.7 (10.50)	952.5 (37.50)	279.4 (11.00)	292.1 (11.50)	457.2 (18.00)	1117.6 (44.00)	1016.0 (40.00)	1066.8 (42.00)

Wiring Diagrams, Ratings and Weights

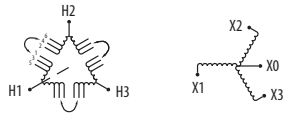

Wiring Diagram 1

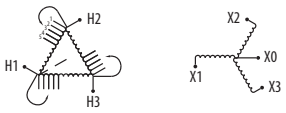

Wiring Diagram 2

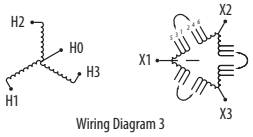

Wiring Diagram 3

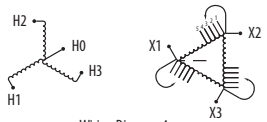

Wiring Diagram 4

kVA	Catalog Number	Style	Primary Voltage	Secondary Voltage	Wiring Diagram	Weight kg (lbs.)
5	1321-3TW005-AA	NH5	230	230	1	63.5 (140)
	1321-3TW005-AB	NH5	230	460	3	63.5 (140)
	1321-3TW005-AC	NH5	230	575	3	63.5 (140)
	1321-3TW005-BA	NH5	460	230	1	63.5 (140)
	1321-3TW005-BB	NH5	460	460	1	63.5 (140)
	1321-3TW005-BC	NH5	460	575	3	63.5 (140)
	1321-3TW005-CA	NH5	575	230	1	63.5 (140)
	1321-3TW005-CB	NH5	575	460	1	63.5 (140)
	1321-3TW005-CC	NH5	575	575	1	63.5 (140)
	1321-3TW005-XX	NH5	208	208	1	63.5 (140)
40	1321-3TW040-AA	NH6	230	230	2	145.2 (320)
	1321-3TW040-AB	NH6	230	460	4	145.2 (320)
	1321-3TW040-AC	NH6	230	575	4	145.2 (320)
	1321-3TW040-BA	NH6	460	230	2	145.2 (320)
	1321-3TW040-BB	NH6	460	460	2	145.2 (320)
	1321-3TW040-BC	NH6	460	575	4	145.2 (320)
	1321-3TW040-CA	NH6	575	230	2	145.2 (320)
	1321-3TW040-CB	NH6	575	460	2	145.2 (320)
	1321-3TW040-CC	NH6	575	575	2	145.2 (320)
51	1321-3TW051-AA	NH6	230	230	2	190.5 (420)
	1321-3TW051-AB	NH6	230	460	4	190.5 (420)
	1321-3TW051-AC	NH6	230	575	4	190.5 (420)
	1321-3TW051-BA	NH6	460	230	2	190.5 (420)
	1321-3TW051-BB	NH6	460	460	2	190.5 (420)
	1321-3TW051-BC	NH6	460	575	4	190.5 (420)
	1321-3TW051-CA	NH6	575	230	2	190.5 (420)
	1321-3TW051-CB	NH6	575	460	2	190.5 (420)
	1321-3TW051-CC	NH6	575	575	2	190.5 (420)
63	1321-3TH063-AA	NH3	230	230	2	244.9 (540)
	1321-3TH063-AB	NH3	230	460	4	244.9 (540)
	1321-3TH063-AC	NH3	230	575	4	244.9 (540)
	1321-3TH063-BA	NH3	460	230	2	244.9 (540)
	1321-3TH063-BB	NH3	460	460	2	244.9 (540)
	1321-3TH063-BC	NH3	460	575	4	244.9 (540)
	1321-3TH063-CA	NH3	575	230	2	244.9 (540)
	1321-3TH063-CB	NH3	575	460	2	244.9 (540)
	1321-3TH063-CC	NH3	575	575	2	244.9 (540)
75	1321-3TH075-AA	NH3	230	230	2	263.1 (580)
	1321-3TH075-AB	NH3	230	460	4	263.1 (580)
	1321-3TH075-AC	NH3	230	575	4	263.1 (580)
	1321-3TH075-BA	NH3	460	230	2	263.1 (580)
	1321-3TH075-BB	NH3	460	460	2	263.1 (580)
	1321-3TH075-BC	NH3	460	575	4	263.1 (580)
	1321-3TH075-CA	NH3	575	230	2	263.1 (580)
	1321-3TH075-CB	NH3	575	460	2	263.1 (580)
	1321-3TH075-CC	NH3	575	575	2	263.1 (580)
93	1321-3TH093-AA	NH3	230	230	2	285.8 (630)
	1321-3TH093-AB	NH3	230	460	4	285.8 (630)
	1321-3TH093-AC	NH3	230	575	4	285.8 (630)
	1321-3TH093-BA	NH3	460	230	2	285.8 (630)
	1321-3TH093-BB	NH3	460	460	2	285.8 (630)
	1321-3TH093-BC	NH3	460	575	4	285.8 (630)
	1321-3TH093-CA	NH3	575	230	2	285.8 (630)
	1321-3TH093-CB	NH3	575	460	2	285.8 (630)
	1321-3TH093-CC	NH3	575	575	2	285.8 (630)
118	1321-3TH118-AA	NH3	230	230	2	328.9 (725)
	1321-3TH118-AB	NH3	230	460	4	328.9 (725)
	1321-3TH118-AC	NH3	230	575	4	328.9 (725)
	1321-3TH118-BA	NH3	460	230	2	328.9 (725)
	1321-3TH118-BB	NH3	460	460	2	328.9 (725)
	1321-3TH118-BC	NH3	460	575	4	328.9 (725)
	1321-3TH118-CA	NH3	575	230	2	328.9 (725)
	1321-3TH118-CB	NH3	575	460	2	328.9 (725)
	1321-3TH118-CC	NH3	575	575	2	328.9 (725)
145	1321-3TH145-AA	NH4	230	230	2	408.2 (900)
	1321-3TH145-AB	NH4	230	460	4	408.2 (900)
	1321-3TH145-AC	NH4	230	575	4	408.2 (900)
	1321-3TH145-BA	NH4	460	230	2	408.2 (900)
	1321-3TH145-BB	NH4	460	460	2	408.2 (900)
	1321-3TH145-BC	NH4	460	575	4	408.2 (900)
	1321-3TH145-CA	NH4	575	230	2	408.2 (900)
	1321-3TH145-CB	NH4	575	460	2	408.2 (900)
	1321-3TH145-CC	NH4	575	575	2	408.2 (900)

continued

kVA	Catalog Number	Style	Primary Voltage	Secondary Voltage	Wiring Diagram	Weight kg (lbs.)
175	1321-3TH175-AA	NH4	230	230	2	453.6 (1000)
	1321-3TH175-AB	NH4	230	460	4	453.6 (1000)
	1321-3TH175-AC	NH4	230	575	4	453.6 (1000)
	1321-3TH175-BA	NH4	460	230	2	453.6 (1000)
	1321-3TH175-BB	NH4	460	460	2	453.6 (1000)
	1321-3TH175-BC	NH4	460	575	4	453.6 (1000)
	1321-3TH175-CA	NH4	575	230	2	453.6 (1000)
	1321-3TH175-CB	NH4	575	460	2	453.6 (1000)
	1321-3TH175-CC	NH4	575	575	2	453.6 (1000)
220	1321-3TH220-AA	NJ1	230	230	2	589.7 (1300)
	1321-3TH220-AB	NJ1	230	460	4	589.7 (1300)
	1321-3TH220-AC	NJ1	230	575	4	589.7 (1300)
	1321-3TH220-BA	NJ1	460	230	2	589.7 (1300)
	1321-3TH220-BB	NJ1	460	460	2	589.7 (1300)
	1321-3TH220-BC	NJ1	460	575	4	589.7 (1300)
	1321-3TH220-CA	NJ1	575	230	2	589.7 (1300)
	1321-3TH220-CB	NJ1	575	460	2	589.7 (1300)
	1321-3TH220-CC	NJ1	575	575	2	589.7 (1300)
275	1321-3TH275-AA	NJ1	230	230	2	680.4 (1500)
	1321-3TH275-AB	NJ1	230	460	4	680.4 (1500)
	1321-3TH275-AC	NJ1	230	575	4	680.4 (1500)
	1321-3TH275-BA	NJ1	460	230	2	680.4 (1500)
	1321-3TH275-BB	NJ1	460	460	2	680.4 (1500)
	1321-3TH275-BC	NJ1	460	575	4	680.4 (1500)
	1321-3TH275-CA	NJ1	575	230	2	680.4 (1500)
	1321-3TH275-CB	NJ1	575	460	2	680.4 (1500)
	1321-3TH275-CC	NJ1	575	575	2	680.4 (1500)
330	1321-3TH330-AA	NJ1	230	230	2	771.1 (1700)
	1321-3TH330-AB	NJ1	230	460	4	771.1 (1700)
	1321-3TH330-AC	NJ1	230	575	4	771.1 (1700)
	1321-3TH330-BA	NJ1	460	230	2	771.1 (1700)
	1321-3TH330-BB	NJ1	460	460	2	771.1 (1700)
	1321-3TH330-BC	NJ1	460	575	4	771.1 (1700)
	1321-3TH330-CA	NJ1	575	230	2	771.1 (1700)
	1321-3TH330-CB	NJ1	575	460	2	771.1 (1700)
	1321-3TH330-CC	NJ1	575	575	2	771.1 (1700)
440	1321-3TH440-AA	NJ2	230	230	1	907.2 (2000)
	1321-3TH440-AB	NJ2	230	460	3	907.2 (2000)
	1321-3TH440-AC	NJ2	230	575	3	907.2 (2000)
	1321-3TH440-BA	NJ2	460	230	1	907.2 (2000)
	1321-3TH440-BB	NJ2	460	460	1	907.2 (2000)
	1321-3TH440-BC	NJ2	460	575	3	907.2 (2000)
	1321-3TH440-CA	NJ2	575	230	1	907.2 (2000)
	1321-3TH440-CB	NJ2	575	460	1	907.2 (2000)
	1321-3TH440-CC	NJ2	575	575	1	907.2 (2000)
550	1321-3TH550-AA	NJ2	230	230	1	1134.0 (2500)
	1321-3TH550-AB	NJ2	230	460	3	1134.0 (2500)
	1321-3TH550-AC	NJ2	230	575	3	1134.0 (2500)
	1321-3TH550-BA	NJ2	460	230	1	1134.0 (2500)
	1321-3TH550-BB	NJ2	460	460	1	1134.0 (2500)
	1321-3TH550-BC	NJ2	460	575	3	1134.0 (2500)
	1321-3TH550-CA	NJ2	575	230	1	1134.0 (2500)
	1321-3TH550-CB	NJ2	575	460	1	1134.0 (2500)
	1321-3TH550-CC	NJ2	575	575	1	1134.0 (2500)
660	1321-3TH660-AA	NJ3	230	230	1	1360.8 (3000)
	1321-3TH660-AB	NJ3	230	460	3	1360.8 (3000)
	1321-3TH660-AC	NJ3	230	575	3	1360.8 (3000)
	1321-3TH660-BA	NJ3	460	230	1	1360.8 (3000)
	1321-3TH660-BB	NJ3	460	460	1	1360.8 (3000)
	1321-3TH660-BC	NJ3	460	575	3	1360.8 (3000)
	1321-3TH660-CA	NJ3	575	230	1	1360.8 (3000)
	1321-3TH660-CB	NJ3	575	460	1	1360.8 (3000)
	1321-3TH660-CC	NJ3	575	575	1	1360.8 (3000)
770	1321-3TH770-AA	NJ3	230	230	1	1587.6 (3500)
	1321-3TH770-AB	NJ3	230	460	3	1587.6 (3500)
	1321-3TH770-AC	NJ3	230	575	3	1587.6 (3500)
	1321-3TH770-BA	NJ3	460	230	1	1587.6 (3500)
	1321-3TH770-BB	NJ3	460	460	1	1587.6 (3500)
	1321-3TH770-BC	NJ3	460	575	3	1587.6 (3500)
	1321-3TH770-CA	NJ3	575	230	1	1587.6 (3500)
	1321-3TH770-CB	NJ3	575	460	1	1587.6 (3500)
	1321-3TH770-CC	NJ3	575	575	1	1587.6 (3500)
880	1321-3TH880-AA	NJ6	230	230	1	1678.3 (3700)
	1321-3TH880-AB	NJ6	230	460	3	1678.3 (3700)
	1321-3TH880-AC	NJ6	230	575	3	1678.3 (3700)
	1321-3TH880-BA	NJ6	460	230	1	1678.3 (3700)
	1321-3TH880-BB	NJ6	460	460	1	1678.3 (3700)
	1321-3TH880-BC	NJ6	460	575	3	1678.3 (3700)
	1321-3TH880-CA	NJ6	575	230	1	1678.3 (3700)
	1321-3TH880-CB	NJ6	575	460	1	1678.3 (3700)
	1321-3TH880-CC	NJ6	575	575	1	1678.3 (3700)

1321-M Common Mode Chokes

1321-M Common Mode Chokes can be installed with 1305, 1336 PLUS II, 1336 IMPACT™ and PowerFlex® 70/700 AC drives. When installed at the drive output the common mode choke helps to guard against interference with other electrical equipment (Programmable Controllers, sensors, analog circuits, etc.). In addition, reducing the PWM carrier frequency reduces the effects and lowers the risk of common mode noise interference.

Catalog Number Explanation

Position	1-4		6		7
	1321	–	M		009
	a		b		c

a

Product	
Code	Type
1321	Power Component

b

Device	
Code	Description
M	Common Mode Choke

c

Current Rating	
Code	Amps
001 ∗	1
009	9
048	48
180	180
670	670

∗ Same core as 1321-M009. Can be used in place of the M009, M048 or M180 if the terminal block and windings typical of those ratings are not desired.

Ratings

Choke Type	Used With	Ratings	Catalog Number
Open Style, 9A (with terminal strip)	All Drives	Communication Cables, Analog Signal Cables, etc.	1321-M001
	PowerFlex 70/700	0.37-1.5 kW (0.5-2 HP) 230V 0.37-4 kW (0.5-5 HP) 480V	1321-M009
	1305 and 1336 PLUS II	0.37-2.2 kW (0.5-2 HP) 230V 0.37-3.7 kW (0.5-5 HP) 480V	
	1336 IMPACT	0.37-3.7 kW (0.5-5 HP) 480V	
Open Style, 48A	PowerFlex 70/700	2.2-11 kW (3-15 HP) 230V 5.5-22 kW (7.5-30 HP) 480V 5.5-30 kW (7.5-40 HP) 600V	1321-M048
	1336 PLUS II	2.2-11 kW (3-15 HP) 230V 5.5-22 kW (7.5-30 HP) 480V 0.75-30 kW (1-40 HP) 600V	
	1336 IMPACT	5.5-22 kW (7.5-30 HP) 480V 5.5-30 kW (7.5-40 HP) 600V	
Open Style, 180A	PowerFlex 70/700	15-45 kW (20-60 HP) 230V 30-110 kW (40-150 HP) 480V 37-110 kW (50-150 HP) 600V	1321-M180
	1336 PLUS II	15-45 kW (20-60 HP) 230V 30-112 kW (40-150 HP) 480V 37-112 kW (50-150 HP) 600V	
	1336 IMPACT	30-112 kW (40-150 HP) 480V 37-93 kW (50-125 HP) 600V	
Open Style, 670A	PowerFlex 70/700	55-66 kW (75-100 HP) 230V 110-350 kW (150-500 HP) 480V 132-223 kW (200-300 HP) 600V	1321-M670
	1336 PLUS II	56-93 kW (75-125 HP) 230V 112-448 kW (150-600 HP) 480V 149-448 kW (200-600 HP) 600V	
	1336 IMPACT	112-448 kW (150-600 HP) 480V 149-448 kW (200-600 HP) 600V	

Approximate Mounting Dimensions

1321-M001

Dimensions are in mm (in.)

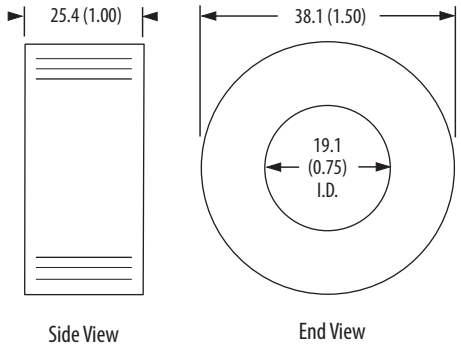

1321-M009

Dimensions are in mm (in.)

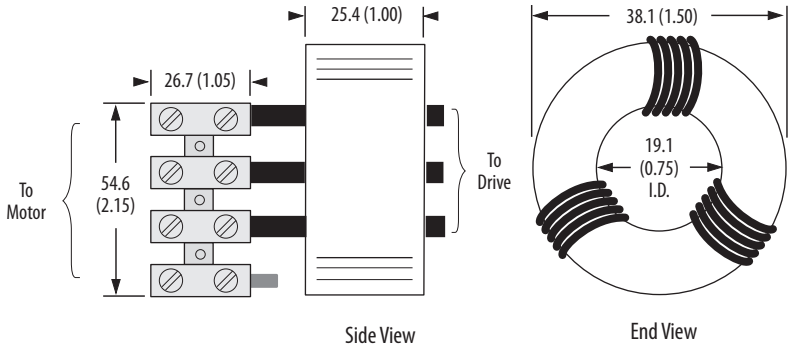

1321-M048

Dimensions are in mm (in.)

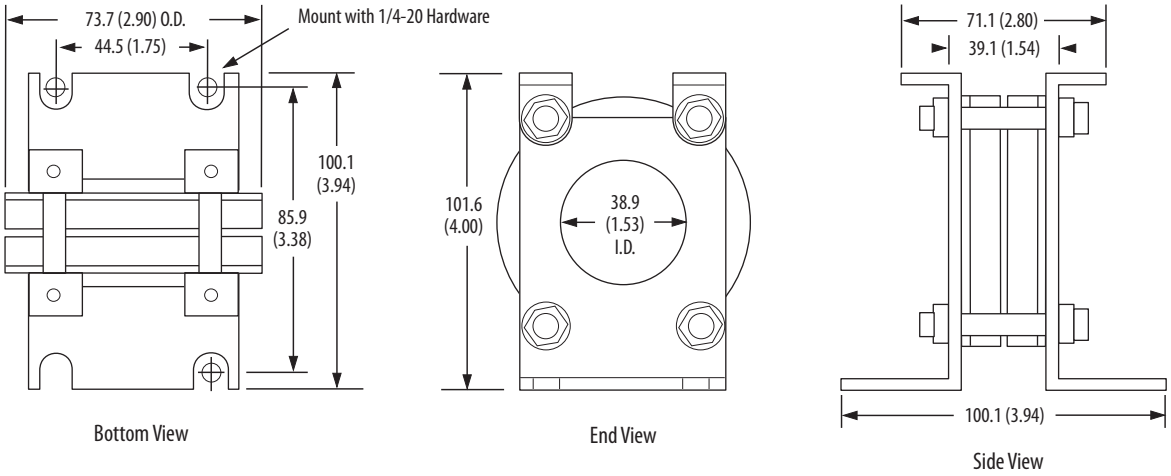

1321-M180

Dimensions are in mm (in.)

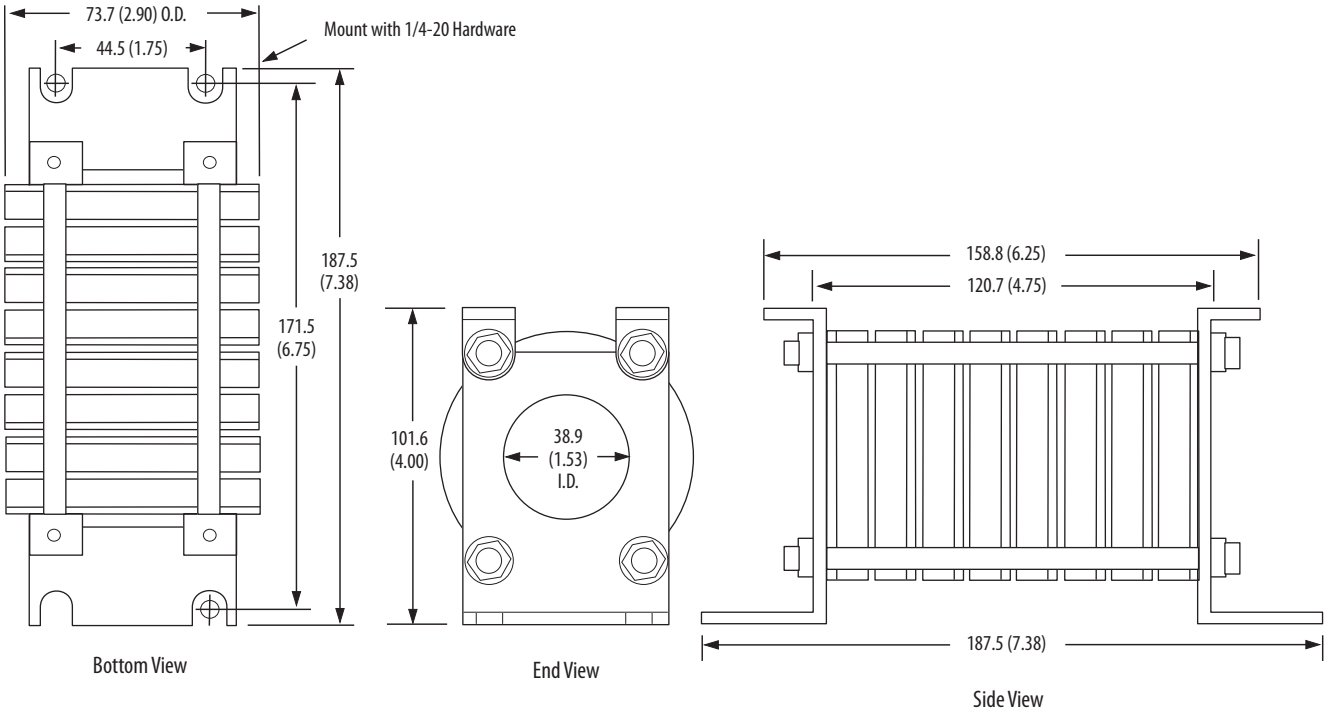

1321-M670

Dimensions are in mm (in.)

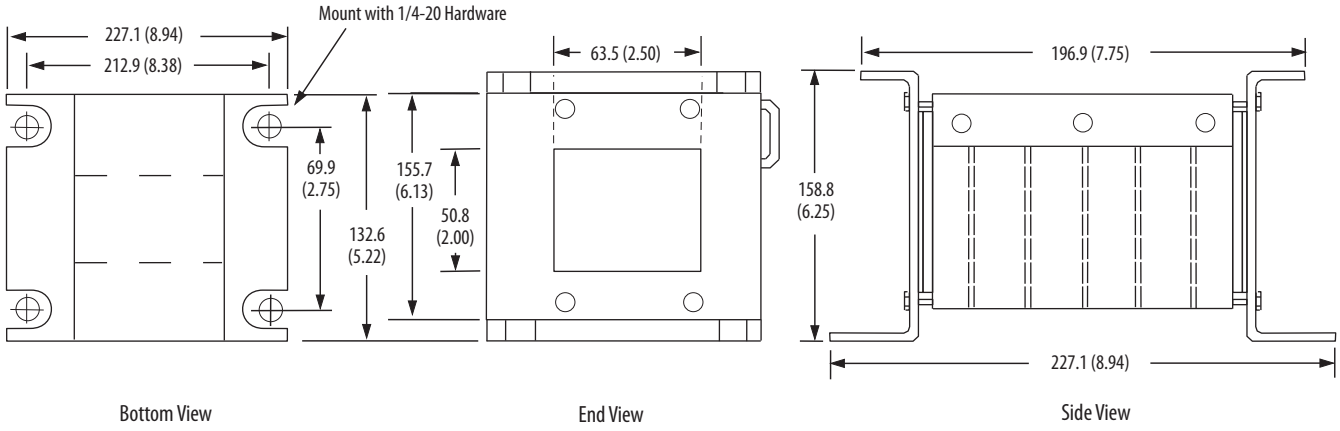

1321-DC DC Link Chokes

1321-DC DC Link Chokes can be installed with Frame C PowerFlex® 40 and all PowerFlex 400 drives. Add DC Link Chokes in series with the internal DC Bus to:

- Reduce AC Input Line Harmonics
- Help meet IEEE-519 limits
- Absorb Voltage/Current Spikes
- Reduce AC Ripple on DC Bus
- Reduce dV/dT and dI/dT rates
- Solve nuisance overvoltage tripping
- Reduce DC Bus Transient Overvoltage

Catalog Number Explanation

Position	1-4	6	7	8	9
	1321	– DC	12	–	1
	a	b	c		d

a

Product	
Code	Type
1321	Power Component

b

Device	
Code	Description
DC	DC Link Choke

c

Current Rating	
Code	Amps
9	9
12	12
18	18
25	25
32	32
40	40

d

Inductance Rating	
Code	Description
1	Each DC Link Choke current rating may have more than one inductance rating. Refer to *Ratings* on page 25 for specific values.
2	
3	
4	

Specifications

Specification	Rating
General	UL-508 component recognized (File E180243)
	1000 Volts DC maximum
	For ripple frequency of 300 Hz or 360 Hz
	50 degrees C temperature rise
	Suitable for 40 degrees C ambient temperature
	Class B insulation system (130 degrees C)
	Suitable for ripple current of 10% peak-to-peak
	Touchsafe terminals in many ratings

Special Features

- Solid copper box lug type terminals on most sizes
- Specially constructed and epoxy impregnated for low noise
- Customized ratings also available - contact the factory for custom mounting, inductance, current or ripple requirements

Ratings

Catalog Number	Type	DC Amps	mH	Watts	Lug Size	Torque
1321-DC9-2	Open Style	9	3.22	7	22-14	4.5
1321-DC12-1	Open Style	12	1	5	22-14	4.5
1321-DC12-2	Open Style	12	2.1	7	18-4	20
1321-DC18-1	Open Style	18	0.65	5	18-4	20
1321-DC18-4	Open Style	18	3.75	17	18-4	20
1321-DC25-4	Open Style	25	1.75	13	18-4	20
1321-DC32-1	Open Style	32	0.85	11	18-4	20
1321-DC32-2	Open Style	32	1.62	14	18-4	20
1321-DC32-3	Open Style	32	2.68	21	18-4	20
1321-DC40-2	Open Style	40	0.75	15	18-4	20
1321-DC40-4	Open Style	40	2	29	18-4	20

Approximate Mounting Dimensions

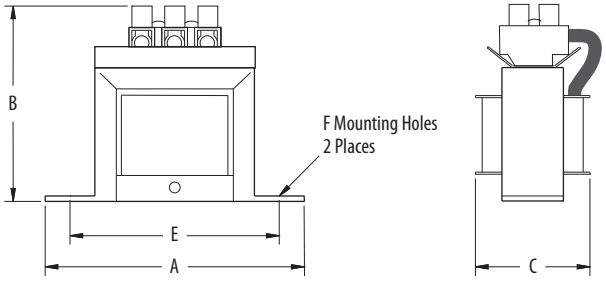

Figure 1

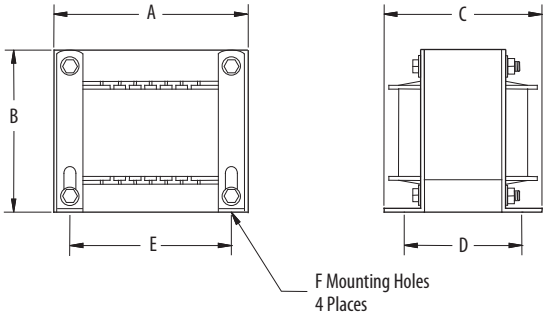

Figure 2

Catalog Number	Figure	Dimensions in mm (in.)					
		A	B	C	D	E	F
1321-DC9-2	1	95.3 (3.75)	82.6 (3.25)	50.8 (2)	(NA)	79.5 (3.13)	47.5 DIA. (0.187 DIA.)
1321-DC12-1	1	95.3 (3.75)	82.6 (3.25)	44.5 (1.75)	(NA)	79.5 (3.13)	47.5 DIA. (0.187 DIA.)
1321-DC12-2	2	96.8 (3.81)	114.3 (4.5)	71.6 (2.82)	50.8 (2)	79.5 (3.13)	5.2 x 8.3 (0.203 x 0.328)
1321-DC18-1	1	95.3 (3.75)	82.6 (3.25)	50.8 (2)	(NA)	79.5 (3.13)	47.5 DIA. (0.187 DIA.)
1321-DC18-4	2	117.6 (4.63)	133.4 (5.25)	101.6 (4)	63.5 (2.5)	95.3 (3.75)	5.2 x 8.3 (0.203 x 0.328)
1321-DC25-4	2	96.8 (3.81)	114.3 (4.5)	76.2 (3)	63.5 (2.5)	79.5 (3.13)	5.2 x 8.3 (0.203 x 0.328)
1321-DC32-1	2	96.8 (3.81)	114.3 (4.5)	84.3 (3.32)	63.5 (2.5)	79.5 (3.13)	5.2 x 8.3 (0.203 x 0.328)
1321-DC32-2	2	117.6 (4.63)	133.4 (5.25)	108.0 (4.25)	76.2 (3)	95.3 (3.75)	5.2 x 8.3 (0.203 x 0.328)
1321-DC32-3	2	117.6 (4.63)	133.4 (5.25)	133.4 (5.25)	101.6 (4)	95.3 (3.75)	5.2 x 8.3 (0.203 x 0.328)
1321-DC40-2	2	96.8 (3.81)	114.3 (4.5)	95.3 (3.75)	76.2 (3)	79.5 (3.13)	5.2 x 8.3 (0.203 x 0.328)
1321-DC40-4	2	165.1 (6.5)	166.4 (6.55)	152.4 (6)	85.9 (3.38)	134.9 (5.31)	7.1 x 13.2 (0.28 x 0.52)

Important User Information

Solid-state equipment has operational characteristics differing from those of electromechanical equipment. Safety Guidelines for the Application, Installation and Maintenance of Solid State Controls (publication SGI-1.1 available from your local Rockwell Automation sales office or online at http://www.rockwellautomation.com/literature/) describes some important differences between solid-state equipment and hard-wired electromechanical devices. Because of this difference, and also because of the wide variety of uses for solid-state equipment, all persons responsible for applying this equipment must satisfy themselves that each intended application of this equipment is acceptable.

In no event will Rockwell Automation, Inc. be responsible or liable for indirect or consequential damages resulting from the use or application of this equipment.

The examples and diagrams in this publication are included solely for illustrative purposes. Because of the many variables and requirements associated with any particular installation, Rockwell Automation, Inc. cannot assume responsibility or liability for actual use based on the examples and diagrams.

No patent liability is assumed by Rockwell Automation, Inc. with respect to use of information, circuits, equipment, or software described in this manual.

Reproduction of the contents of this manual, in whole or in part, without written permission of Rockwell Automation, Inc., is prohibited.

Documentation Feedback

Your comments will help us serve your documentation needs better. If you have any suggestions on how to improve this document, complete this form, publication RA-DU002, available at http://www.rockwellautomation.com/literature/.

Allen-Bradley, Rockwell Software, Rockwell Automation, and LISTEN. THINK. SOLVE are trademarks of Rockwell Automation, Inc.
Trademarks not belonging to Rockwell Automation are property of their respective companies.

Rockwell Otomasyon Ticaret A.Ş., Kar Plaza İş Merkezi E Blok Kat:6 34752 İçerenköy, İstanbul, Tel: +90 (216) 5698400

www.rockwellautomation.com

Power, Control and Information Solutions Headquarters
Americas: Rockwell Automation, 1201 South Second Street, Milwaukee, WI 53204-2496 USA, Tel: (1) 414.382.2000, Fax: (1) 414.382.4444
Europe/Middle East/Africa: Rockwell Automation NV, Pegasus Park, De Kleetlaan 12a, 1831 Diegem, Belgium, Tel: (32) 2 663 0600, Fax: (32) 2 663 0640
Asia Pacific: Rockwell Automation, Level 14, Core F, Cyberport 3, 100 Cyberport Road, Hong Kong, Tel: (852) 2887 4788, Fax: (852) 2508 1846

Publication 1321-TD001O-EN-P - September 2012
Supersedes Publication 1321-TD001N-EN-P - October 2008

Copyright © 2012 Rockwell Automation, Inc. All rights reserved. Printed in the U.S.A.

User Manual

Allen-Bradley

Dual-Port EtherNet/IP Communication Adapter

Catalog Number 20-COMM-ER

Important User Information

Solid state equipment has operational characteristics differing from those of electromechanical equipment. *Safety Guidelines for the Application, Installation and Maintenance of Solid State Controls* (Publication SGI-1.1 available from your local Rockwell Automation sales office or online at http://www.rockwellautomation.com/literature) describes some important differences between solid state equipment and hard-wired electromechanical devices. Because of this difference, and also because of the wide variety of uses for solid state equipment, all persons responsible for applying this equipment must satisfy themselves that each intended application of this equipment is acceptable.

In no event will Rockwell Automation, Inc. be responsible or liable for indirect or consequential damages resulting from the use or application of this equipment.

The examples and diagrams in this manual are included solely for illustrative purposes. Because of the many variables and requirements associated with any particular installation, Rockwell Automation, Inc. cannot assume responsibility or liability for actual use based on the examples and diagrams.

No patent liability is assumed by Rockwell Automation, Inc. with respect to use of information, circuits, equipment, or software described in this manual.

Reproduction of the contents of this manual, in whole or in part, without written permission of Rockwell Automation, Inc. is prohibited.

Throughout this manual, when necessary we use notes to make you aware of safety considerations.

WARNING: Identifies information about practices or circumstances that can cause an explosion in a hazardous environment, which may lead to personal injury or death, property damage, or economic loss.

Important: Identifies information that is critical for successful application and understanding of the product.

ATTENTION: Identifies information about practices or circumstances that can lead to personal injury or death, property damage, or economic loss. Attentions help you identify a hazard, avoid a hazard, and recognize the consequences.

Shock Hazard labels may be located on or inside the equipment (e.g., drive or motor) to alert people that dangerous voltage may be present.

Burn Hazard labels may be located on or inside the equipment (e.g., drive or motor) to alert people that surfaces may be at dangerous temperatures.

Allen-Bradley, Rockwell Software, and TechConnect are trademarks of Rockwell Automation, Inc.

Trademarks not belonging to Rockwell Automation are property of their respective companies.

Preface

About This Manual 7
Conventions Used in This Manual 7
Rockwell Automation Support 8
Additional Resources 8

Chapter 1

Getting Started

Components 11
Features 12
Compatible Products 13
Required Equipment 13
Equipment Shipped with the Adapter 13
User-Supplied Equipment 13
Safety Precautions 15
Quick Start 16

Chapter 2

Installing the Adapter

EMC Conformance 17
Preparing for an Installation 18
Setting the Web Pages Switch 19
Connecting the Adapter to the Drive or SMC 20
Connecting the Adapter to the Network 23
Applying Power 24
Start-Up Status Indications 24
Configuring and Verifying Key Drive Parameters 26
Commissioning the Adapter 26

Chapter 3

Configuring the Adapter

Configuration Tools 27
Using the PowerFlex 7-Class HIM 28
Using an LED HIM 28
Using an LCD HIM 28
Using BOOTP 29
Configure the Adapter Using a BOOTP Server 29
Setting the IP Address, Subnet Mask, and Gateway Address 32
Disable the BOOTP Feature 32
Set an IP Address Using Parameters 32
Set a Subnet Mask Using Parameters 33
Set a Gateway Address Using Parameters 33
Setting the Data Rate 34
Setting the I/O Configuration 35
Selecting Master-Slave or Peer-to-Peer 36
Setting a Master-Slave Hierarchy 36
Setting the Adapter to Transmit Peer-to-Peer Data 37
Setting the Adapter to Receive Peer-to-Peer Data 38
Setting the Reference Adjustment 41
Setting a Fault Action 41

Changing the Fault Action 42
Setting the Fault Configuration Parameters 42
Setting Web Access Control 42
Resetting the Adapter 43
Viewing the Adapter Status Using Parameters 44
Updating the Adapter Firmware 44

Chapter 4

Configuring the I/O

Using RSLinx Classic Software 47
ControlLogix Controller Example 48
Adding the Bridge to the I/O Configuration 49
Using RSLogix 5000 Device Add-on Profiles, Version 16.00 or Later 51
Using the RSLogix 5000 Classic Profile, Versions 13.00...15.00 . . . 60
Using the RSLogix 5000 Generic Profile, All Versions 62
Limitations Using a MicroLogix 1100/1400 Controller 68
MicroLogix 1100/1400 Controller Example 68
Configuring Parameters for Network I/O 69
Creating RSLogix 500 Project, Version 7.00 or Later 70

Chapter 5

Using the I/O

About I/O Messaging 79
Understanding the I/O Image 80
ControlLogix Controller Image 80
MicroLogix 1100/1400 Controller Image 82
Using Logic Command/Status 84
Using Reference/Feedback 84
PowerFlex 7-Class Drives 85
Using Datalinks 86
Rules for Using Datalinks 86
Using 16-Bit Datalinks to Read/Write 32-Bit Parameters 86
Example Ladder Logic Program Information 87
Functions of the Example Programs 87
Logic Command/Status Words 88
ControlLogix Controller Example 88
Creating Ladder Logic Using the RSLogix 5000 Device Add-on Profiles, Version 16.00 or Later 88
Creating Ladder Logic Using the RSLogix 5000 Classic Profile, Versions 1300...15.00 89
Creating Ladder Logic Using the RSLogix 5000 Generic Profile, All Versions 90
MicroLogix 1100/1400 Controller Example 96
Drive and Adapter Parameter Settings 96
Understanding Controller Data Table Addresses 97

Chapter 6

Using Explicit Messaging

About Explicit Messaging 106
Performing Explicit Messages 106
ControlLogix Controller Examples 108
Explicit Messaging Using RSLogix 5000 Software, Version 15.00 or Later 108
Explicit Messaging Using RSLogix 5000 Software, All Versions.. 121
MicroLogix 1100/1400 Controller Examples..... 124
MicroLogix 1100/1400 Controller Explicit Messaging Using the Read/Write Parameter Service..... 125
MicroLogix 1100/1400 Controller Explicit Messaging Using the Generic Get/Set Attribute Service 130

Chapter 7

Troubleshooting

Understanding the Status Indicators..... 143
Port Status Indicator 144
Network Status Indicator..... 145
Link (LS1, LS2) Status Indicator 145
NET A Status Indicator 145
Hardware Reset via Node Switches 146
Viewing Adapter Diagnostic Items..... 146
Viewing and Clearing Events..... 149

Chapter 8

Viewing the Adapter Web Pages

Accessing the Adapter Web Home Page..... 153
Viewing the Web Pages 153
Title Bar on Adapter Web Pages 154
Navigation Pane on Adapter Web Pages..... 155
Process Display Home Page 156
Browse DPI Device Folder 156
Diagnostics Web Page 157
Diagnostic Overview link 157
Network Setting Link..... 158
EtherNet/IP Statistics Link 159
Ring Statistics link..... 159
Crash Display Link 160
Heap Statistics Display link 160
Administrative Web Pages 160
Device Identity Link 161
Network Configuration Link 161
Email Configuration Link..... 162
Password Configuration 165

Chapter 9

Using the Adapter in a DPI External Comms Kit (20-XCOMM-DC-BASE)

Installing the Adapter 167

Appendix A

Specifications

Communications. 169
Electrical 169
Mechanical 170
Environmental. 170
Regulatory Compliance. 170

Appendix B

Adapter Parameters

About Parameter Numbers. 171
Parameter List 171

Appendix C

EtherNet/IP Objects

Supported Data Types 182
Identity Object. 182
Assembly Object 183
Register Object. 184
Parameter Object 185
Parameter Group Object. 188
Device Level Ring Object 189
Quality of Service Object 190
PCCC Object 190
DPI Device Object 196
DPI Parameter Object 198
DPI Fault Object. 204
DPI Alarm Object. 206
DPI Diagnostic Object 207
DPI Time Object 209
TCP/IP Interface Object 211
Ethernet Link Object. 213

Appendix D

Logic Command/Status Words

PowerFlex 70/70EC, PowerFlex 700/700VC, and PowerFlex 700H Drives 215
Logic Command Word 215
Logic Status Word. 216
PowerFlex 700S Drives 217
Logic Command Word (Phase II Control) 217
Logic Status Word (Phase II Control) 218
SMC Flex Controllers /SMC-50 Controllers 219
Logic Status Word. 219
Logic Command Word (Control) 220

Glossary. 221

Index 231

Preface

About This Manual

Topic	Page
Conventions Used in This Manual	7
Rockwell Automation Support	7
Additional Resources	8

This manual provides information about the adapter and using it with PowerFlex 7-Class (Architecture-Class) drives or Bulletin 150 SMC Soft Starters. The adapter can be used with other products that support a DPI™ adapter, such as the DPI External Comms Kit (20-XCOMM-DC-BASE). See the documentation for your product for specific information about how it works with the adapter.

Conventions Used in This Manual

The following conventions are used throughout this manual:

- Parameter names are shown in the format **Parameter xx - [*]**. The xx represents the parameter number. The * represents the parameter name—for example **Parameter 01 - [DPI Port]**.
- Menu commands are shown in bold type face and follow the format **Menu > Command**. For example, if you read 'Select **File > Open**', you should click the **File** menu and then click the **Open** command.
- The firmware revision number (FRN) is displayed as FRN *X.xxx*, where '*X*' is the major revision number and '*xxx*' is the minor revision number.
- The screen images in this manual resulted from using the following software:
  - RSLinx® Classic software, version 2.51
  - RSLogix 5000 software, version 16

  Different versions of the software may have screens that vary in appearance, and differences in procedures.

Rockwell Automation Support

Rockwell Automation offers support services worldwide, with over 75 sales and support offices, over 500 authorized distributors, and over 250 authorized systems integrators located through the United States alone. In addition, Rockwell Automation representatives are in every major country in the world.

Local Product Support

Contact your local Rockwell Automation representative for the following:

- Sales and order support
- Product technical training

- Warranty support
- Support service agreements

Technical Product Assistance

For technical assistance, please review the information in Chapter 7, Troubleshooting, first. If you still have problems, then access the Allen-Bradley Technical Support website at www.ab.com/support/abdrives or contact Rockwell Automation.

Additional Resources

These documents contain additional information concerning related products from Rockwell Automation.

Resource	Description
Industrial Automation wiring and grounding guidelines, publication 1770-4.1	Provides general guidelines for installing a Rockwell Automation industrial system.
Product certifications website, http://www.ab.com	Provides declarations of conformity, certificates, and other certification details.
Industrial Security Best Practices, publication SECUR-AT001	Provides further information and guidelines on product and system security.
PowerFlex 7-Class DPI (Drive Peripheral Interface) Network Communication Adapter Installation Instructions, publication 20COMM-IN004	Information on the installation of PowerFlex® 20-COMM-x Network Communication Adapters.
EtherNet/IP Media Planning and Installation Manual, ODVA publication 148 (1)	Information on the planning, installation, and techniques used to implement an EtherNet/IP network.
EtherNet/IP Network Infrastructure Guidelines, ODVA publication 35 (1)	
Ethernet Design Considerations Reference Manual, publication ENET-RM002	
Connected Components Workbench website http://www.ab.com/support/abdrives/webupdate/software.html, and online help	Information on the Connected Components Workbench™ software tool—and includes a link for **free** software download.
PowerFlex 20-HIM-A3/-A5/-C3S/-C5S HIM Quick Reference, publication 20HIM-QR001	Information on the use of the PowerFlex 20-HIM-A3, 20-HIM-A5, 20-HIM-C3S, and 20-HIM-C5S HIMs.
PowerFlex 20-HIM-A6/-C6S HIM (Human Interface Module) User Manual, publication 20HIM-UM001	Information on the installation and use of the PowerFlex 20-HIM-A6 and 20-HIM-C6S HIMs.
PowerFlex 70 User Manual, publication 20A-UM001 PowerFlex 70/700 Reference Manual, publication PFLEX-RM001 PowerFlex 70EC/700VC Reference Manual, publication PFLEX-RM004	Information on installing, programming, and technical data of PowerFlex 70 and PowerFlex 70EC drives.
PowerFlex 700 Series A User Manual, publication 20B-UM001 PowerFlex 700 Series B User Manual, publication 20B-UM002 PowerFlex 70/700 Reference Manual, publication PFLEX-RM001 PowerFlex 70EC/700VC Reference Manual, publication PFLEX-RM004	Information on installing, programming, and technical data of PowerFlex 700/700VC Series A and PowerFlex 700VC Series B drives.
PowerFlex 700H Installation Instructions, publication PFLEX-IN006 PowerFlex 700H Programming Manual, publication 20C-PM001	Information on installing, programming, and technical data of PowerFlex 700H drives.

Resource	Description
PowerFlex 700S w/Phase I Control Installation Manual (Frames 1…6), publication 20D-IN024 PowerFlex 700S w/Phase I Control Installation Manual (Frames 9 and 10), publication PFLEX-IN006 PowerFlex 700S w/Phase I Control User Manual (All Frame Sizes), publication 20D-UM001 PowerFlex 700S w/Phase I Control Reference Manual, publication PFLEX-RM002 PowerFlex 700S w/Phase II Control Installation Manual (Frames 1…6), publication 20D-IN024 PowerFlex 700S w/Phase II Control Installation Manual (Frames 9…14), publication PFLEX-IN006 PowerFlex 700S w/Phase II Control Programming Manual (All Frame Sizes), publication 20D-PM001 PowerFlex 700S w/Phase II Control Reference Manual, publication PFLEX-RM003	Information on installing, programming, and technical data of PowerFlex 700S drives.
PowerFlex 700L User Manual, publication 20L-UM001	Information on installing, programming, and technical data of PowerFlex 700L Liquid-Cooled AC drives.
SMC Flex Smart Motor Controller User Manual, publication 150-UM008	Information on installing, programming, and technical data of SMC Flex State Smart Motor Controller.
SMC-50 Solid-State Smart Motor Controller User Manual, publication 150-UM011	Information on installing, programming, and technical data of SMC-50 Solid-State Smart Motor Controller.
PowerFlex Digital DC Drive User Manual, publication 20P-UM001	Information on installing, programming, and technical data of PowerFlex Digital DC drives.
Getting Results with RSLinx Guide, publication LINX-GR001and online help (1)	Information on using RSLinx Classic software.
RSLogix Emulate 5/500 Getting Results Guide, publication EMULAT-GR002 and online help	Information on how to install and navigate the RSLogix Emulate software for ladder logic programming with Allen-Bradley® PLC-5® and SLC™ 500 processors.
RSLogix 500 Getting Results Guide, publication LG500-GR002 and online help (1)	Information on using RSLogix 500 software tool.
RSLogix 5000 PIDE Autotuner Getting Results Guide, publication PIDE-GR001 and online help (1)	Information on using RSLogix 5000 software tool.
EtherNet/IP Modules in Logix5000 Control Systems User Manual, publication ENET-UM001	Information on using the ControlLogix® 1756-ENBT or 1756-EN2T EtherNet/IP communication modules with your Logix5000 controller and communicating with various devices on the EtherNet/IP network.
Enhanced and Ethernet PLC-5 Programmable Controllers User Manual, publication 1785-UM012	Information to help design, operate and maintain an Enhanced and Ethernet PLC-5 programmable controller system.
MicroLogix 1100 Programmable Controllers User Manual, publication 1763-UM001 MicroLogix 1400 Programmable Controllers User Manual, publication 1766-UM001	Information to install, wire, and troubleshoot the MicroLogix™ 1100 and MicroLogix 1400 controllers respectively.
Web Updates http://www.ab.com/support/abdrives/webupdate/	Flash Update Files, Product Help Files, Control Bar Files, GSD Files, EDS File links, DriveTools SP / Drive AOP Database Files, and other downloads to keep your Allen-Bradley brand drive products up to date

(1) Use this link to the ODVA EtherNet/IP library: http://odva.org/Home/ODVATECHNOLOGIES/EtherNetIP/EtherNetIPLibrary/tabid/76/Default.aspx

Documentation can be obtained online at http://literature.rockwellautomation.com. To order paper copies of technical documentation, contact your local Rockwell Automation distributor or sales representative.

To find your local Rockwell Automation distributor or sales representative, visit http://www.rockwellautomation.com/locations.

For information such as firmware updates or answers to drive-related questions, go to the Drives Service & Support web site at http://www.ab.com/support/abdrives and click on the Downloads or Knowledgebase link.

Notes:

Getting Started

The adapter is intended for installation in a PowerFlex 7-Class drive or Bulletin 150 SMC soft starter and is used for network communication.

Topic	Page
Components	11
Features	12
Compatible Products	13
Required Equipment	13
Safety Precautions	15
Quick Start	16

Components

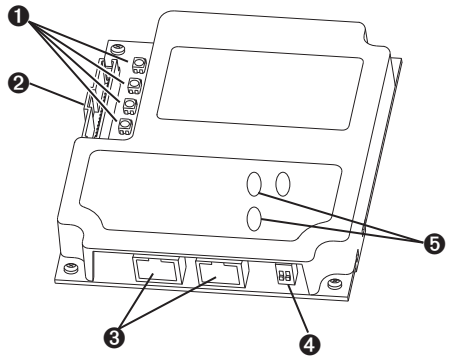

Item	Part	Description
1	Status Indicators	Four status indicators that indicate the status of the DPI, the adapter, and network connection. See Chapter 7, Troubleshooting.
2	DPI Connector	A 20-pin, single-row shrouded male header. An Internal Interface cable is connected to this connector and a connector on the drive.
3	Ethernet Connector	RJ-45 connector for the Ethernet network cable. The connector is CAT-5 compliant to ensure reliable data transfer on 100Base-TX Ethernet connections.
4	Web Pages Switch (SW4)	Enables or disables the adapter web pages. See Setting the Web Pages Switch on page 19.
5	Address/mode switches	Set IP address or DHCP/BootP mode.

Features

The features of the adapter include the following:

- Typical mounting in a PowerFlex 7-Class drive or SMC soft starter.
- Captive screws to secure and ground the adapter to the drive.
- Compatibility with various configuration tools to configure the adapter and connected host drive, including the following tools:
  - PowerFlex HIM (Human Interface Module) on the drive or SMC, if available
  - Connected Components Workbench software, version 1.02 or later
  - DriveExplorer software, version 2.01 or later
  - DriveExecutive software, version 3.01 or later
  - RSLogix5000 version16 and later with Drives Add-on Profile version 4.05 and later

  Additionally, you can use a BOOTP/DHCP server to configure the network address for the adapter.
- Status indicators that report the status of the drive communications, the adapter, and network. They are visible when the drive cover is open or closed.
- Parameter-configured I/O (Logic Command/Reference and up to four pairs of Datalinks) to accommodate application requirements.
- Explicit Messaging support.
- Master-Slave or Peer-to-Peer hierarchy that can be configured to transmit data to and from either a controller or another PowerFlex drive or SMC on the network.
- User-defined fault actions to determine how the adapter and connected PowerFlex drive respond to the following:
  - I/O messaging communication disruptions (Comm Flt Action)
  - Controllers in idle mode (Idle Flt Action)
- Web pages, viewed by using a web browser, that show information about the adapter, its connected host drive, and DPI devices connected to the drive.
- Configurable e-mail messaging to desired addresses when selected drive faults occur and/or are cleared, and/or when the adapter takes a communication or idle fault action.
- Access to any PowerFlex drive or SMC and its connected peripherals on the network to which the adapter is connected.
- Device Level Ring (DLR) or Star Topology support with Quality of Service (QoS) support.

Compatible Products

At the time of publication, the adapter is compatible with the following products:

- PowerFlex 70/70EC drives
- PowerFlex 700/700VC drives
- PowerFlex 700H drives
- PowerFlex 700S drives
- PowerFlex 7000/7000-2 drives
- PowerFlex 700L drives
- PowerFlex Digital DC drives
- DPI External Comms Kit
- SMC™-50
- SMC™ Flex

Note: The adapter is not compatible with PowerFlex 750 series drives.

Required Equipment

Some of the equipment that is required for use with the adapter is shipped with the adapter, but some you must supply yourself.

Equipment Shipped with the Adapter

When you unpack the adapter, verify that the package includes the following:

- ❑ One 20-COMM-ER EtherNet/IP adapter
- ❑ One 2.54 cm (1 in.) long and one 15.24 cm (6 in.) long Internal Interface cable (only one cable is needed to connect the adapter to the drive; for which cable to use, see Figure 3 - on page 2-21)
- ❑ One PowerFlex 7-Class DPI (Drive Peripheral Interface) Network Communication Adapter Installation Instructions, publication 20COMM-IN004
- ❑ One LED Identification Label for use with Bulletin 150 SMC Flex and Bulletin 700 PowerFlex drives

User-Supplied Equipment

To install and configure the adapter, you must supply the following:

- ❑ A small flathead screwdriver
- ❑ Ethernet cable (for details, see the EtherNet/IP Media Planning and Installation Manual, ODVA publication 148 available on the ODVA website at http://odva.org/Home/ODVATECHNOLOGIES/EtherNetIP/EtherNetIPLibrary/tabid/76/Default.aspx)
- ❑ Ethernet switch (for details, see the Ethernet Design Considerations Reference Manual, publication ENET-RM002)
- ❑ Configuration tool, such as the following:
  - PowerFlex 20-HIM-xx HIM

– Connected Components Workbench software, version 1.02 or later

Connected Components Workbench is the recommended stand-alone software tool for use with PowerFlex drives. You can obtain a **free copy** by:

- Internet download at http://www.ab.com/support/abdrives/webupdate/software.html
- Requesting a DVD at http://www.ab.com/onecontact/controllers/micro800/

Your local distributor may also have copies of the DVD available.

Connected Components Workbench software cannot be used to configure SCANport-based drives or Bulletin 160 drives.

– DriveExplorer software, version 2.01 or later

This software tool has been discontinued and is now available as **freeware** at http://www.ab.com/support/abdrives/webupdate/software.html. There are no plans to provide future updates to this tool and the download is being provided 'as-is' for users that lost their DriveExplorer CD, or need to configure legacy products not supported by Connected Components Workbench software.

– DriveExecutive software, version 3.01 or later

A Lite version of DriveExecutive software ships with RSLogix 5000, RSNetWorx MD, FactoryTalk AssetCentre, and ItelliCENTER software. All other versions are purchasable items:

- 9303-4DTE01ENE Drive Executive software
- 9303-4DTS01ENE DriveTools SP Suite (includes DriveExecutive and DriveObserver software)
- 9303-4DTE2S01ENE DriveExecutive software upgrade to DriveTools SP Suite (adds DriveObserver software)

DriveExecutive software updates (patches, and so forth) can be obtained at http://www.ab.com/support/abdrives/webupdate/software.html. It is highly recommended that you periodically check for and install the latest update.

– BOOTP server, version 2.1 or higher, for network setup only

❑ Controller configuration software, such as RSLogix 5/500/5000

❑ A computer connection to the EtherNet/IP network

Safety Precautions

Please read the following safety precautions carefully.

ATTENTION: Risk of injury or death exists. The PowerFlex drive may contain high voltages that can cause injury or death. Remove all power from the PowerFlex drive or SMC, and then verify power has been discharged before installing or removing an adapter.

ATTENTION: Risk of injury or equipment damage exists. Only personnel familiar with drive and power products and the associated machinery should plan or implement the installation, start up, configuration, and subsequent maintenance of the product using an adapter. Failure to comply may result in injury and/or equipment damage.

ATTENTION: Risk of equipment damage exists. The adapter contains electrostatic discharge (ESD) sensitive parts that can be damaged if you do not follow ESD control procedures. Static control precautions are required when handling the adapter. If you are unfamiliar with static control procedures, see Guarding Against Electrostatic Damage, publication 8000-4.5.2.

ATTENTION: Risk of injury or equipment damage exists. If the adapter is transmitting control I/O to the drive, the drive may fault when you reset the adapter. Determine how your drive will respond before resetting an adapter.

ATTENTION: Risk of injury or equipment damage exists. **Parameters 21 - [Comm Flt Action]**, **24 - [Idle Flt Action]**, and **43 - [Peer Flt Action]** let you determine the action of the adapter and connected drive if communication is disrupted or the controller is idle. By default, these parameters fault the drive. You may configure these parameters so that the drive continues to run, however, precautions should be taken to ensure that the settings of these parameters do not create a risk of injury or equipment damage. When commissioning the drive, verify that your system responds correctly to various situations (for example, a disconnected cable or a controller in idle state).

ATTENTION: Risk of injury or equipment damage exists. When a system is configured for the first time, there may be unintended or incorrect machine motion. Disconnect the motor from the machine or process during initial system testing.

ATTENTION: Risk of injury or equipment damage exists. The examples in this publication are intended solely for purposes of example. There are many variables and requirements with any application. Rockwell Automation, Inc. does not assume responsibility or liability (to include intellectual property liability) for actual use of the examples shown in this publication.

Quick Start

This section is provided to help experienced users quickly start using the adapter. If you are unsure how to complete a step, refer to the referenced chapter.

Step	Action	See
1	Review the safety precautions for the drive or SMC	Drive or SMC User Manual
2	Review the safety precautions for the adapter	Throughout this manual
3	Verify that the power control device is properly installed.	Drive or SMC User Manual
4	Install the adapter. a. Verify that the power control device is not powered. b. Connect the adapter to the device with the Internal Interface cable. c. Use the captive screws to secure and ground the adapter to the device. d. Connect the adapter to the network with an Ethernet cable. **NOTE:** When installing the adapter in the DPI External Comms Kit—see the 20-XCOMM-DC-BASE Installation Instructions, publication 20COMM-IN001, supplied with the kit.	PowerFlex 7-Class DPI Network Communication Adapter Installation Instructions, publication 20COMM-IN004, and Chapter 2, Installing the Adapter
5	Apply power to the adapter. a. Verify that the adapter is installed correctly. b. The adapter receives power from the drive or SMC. Apply power to the device. The status indicators should be green. If they flash red, there is a problem. See Chapter 7, Troubleshooting. c. Configure and verify key drive or SMC parameters.	Chapter 2, Installing the Adapter
6	Configure the adapter for your application. Set adapter parameters for the following functions as required by your application: • IP address, subnet mask, and gateway address • Data rate • I/O configuration • Master-Slave or Peer-to-Peer hierarchy • Fault actions	Chapter 3, Configuring the Adapter
7	Configure the controller to communicate with the adapter. Use a controller configuration tool, such as RSLogix software, to configure the master on the network to recognize the adapter and drive or SMC.	Chapter 4, Configuring the I/O
8	Create a ladder logic program. Use a controller configuration tool, such as RSLogix software, to create a ladder logic program that enables you to do the following: • Control the connected device, via the adapter, by using I/O. • Monitor or configure the device or SMC by using explicit messages.	Chapter 5, Using the I/O Chapter 6, Using Explicit Messaging

Installing the Adapter

This chapter provides instructions for installing the adapter in a PowerFlex 7-Class drive.

Topic	Page
Preparing for an Installation	18
Setting the Web Pages Switch	19
Connecting the Adapter to the Drive or SMC	20
Connecting the Adapter to the Network	23
Applying Power	24
Commissioning the Adapter	26

EMC Conformance

For all PowerFlex 70 and 700 drive installations that require CE conformance per EN61800-3, a ferrite core must be installed on each EtherNet/IP cable connected to the drive.

These ferrites are not required for installation on SMC products.

A ferrite core such as FAIR-RITE part number 2643803802 needs to be installed according to the following diagram.

Note: the cable is wrapped 4 times around each core.

Figure 1 - Ferrite Core Installation

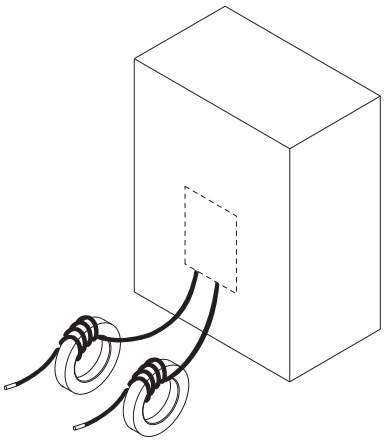

Preparing for an Installation

Before installing the adapter, do the following:

- Make sure the Ethernet switch is the correct type. A 'managed' switch that supports IGMP snooping is usually recommended. An 'unmanaged' switch can be used instead if RSLogix 5000 software, version 18.00 or later, is used and all devices on the network are configured for 'unicast' I/O. For more details, see the following documents:
  - EtherNet/IP Media Planning and Installation Manual, ODVA publication 148
  - EtherNet/IP Network Infrastructure Guidelines, ODVA publication 35
  - Ethernet Design Considerations Reference Manual, publication ENET-RM002

- Understand IGMP Snooping/Ethernet Switches

  The 20-COMM-ER adapter is a multicast device. In most situations, an IGMP snooping (managed) switch is required. If more than one or two 20-COMM-ER adapters are connected to the switch, a managed switch is required—otherwise the drive may fault on a DPI Port x network loss. The 20-COMM-ER, RSLogix 5000 software, version 18.00 or later, and a ControlLogix or CompactLogix controller will support unicast. Unicast setup is required when adding the drive to the I/O. When all adapters are set up as unicast devices, then an IGMP snooping (managed) switch is not needed.

  Much of EtherNet/IP implicit (I/O) messaging uses IP multicast to distribute I/O control data, which is consistent with the CIP producer/consumer model. Historically, most switches have treated multicast packets the same as broadcast packets. That is, all multicast packets are re-transmitted to all ports.

  IGMP snooping constrains the flooding of multicast traffic by dynamically configuring switch ports so that multicast traffic is forwarded only to ports associated with a particular IP multicast group.

  Switches that support IGMP snooping (managed switches) 'learn' which ports have devices that are part of a particular multicast group and only forward the multicast packets to the ports that are part of the multicast group.

  Be careful as to what level of support a switch has of IGMP snooping. Some layer 2 switches that support IGMP snooping require a router (which could be a layer 3 switch) to send out IGMP polls to learn what devices are part of the multicast group. Some layer 2 switches can use IGMP snooping without a router sending polls. If your control system is a standalone network or is required to continue performing if the router is out of service, make sure the switch you are using supports IGMP snooping without a router being present.

- See Appendix A for the number of CIP connections supported by the 20-COMM-ER adapter.
- Verify that you have all required equipment. See Required Equipment on page 13.

Setting the Web Pages Switch

To use the adapter web pages, the Web Pages Switch must be set to its 'Enable Web' position. For information to enable or disable web pages for an adapter, see Setting Web Access Control on page 42.

ATTENTION: Risk of equipment damage exists. The adapter contains electrostatic discharge (ESD) sensitive parts that can be damaged if you do not follow ESD control procedures. Static control precautions are required when handling the adapter. If you are unfamiliar with static control procedures, see Guarding Against Electrostatic Damage, publication 8000-4.5.2.

Important: A new switch setting is recognized only when power is applied to the adapter, or the adapter is reset. If you change a switch setting, cycle power or reset the adapter to apply the change.

Set the Web Pages Switch (SW4 in Figure 2) to enable or disable the adapter web pages. By default, the adapter web pages are disabled. For complete details on adapter web pages, see Viewing the Adapter Web Pages on page 153.

Figure 2 - Setting Web Pages Switch (only Series B Adapter)

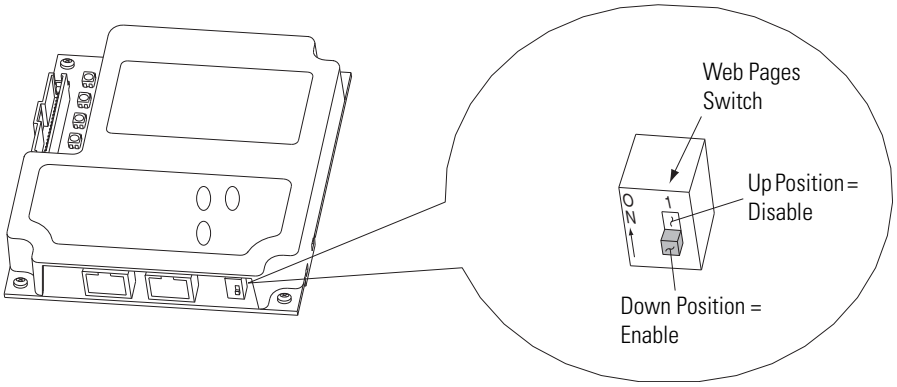

Setting	Description
Down (OFF) position	Web server enabled
Up (ON) position	Web server disabled (as shipped)

Connecting the Adapter to the Drive or SMC

ATTENTION: Risk of injury or death exists. The PowerFlex drive or SMC may contain high voltages that can cause injury or death. Remove **ALL** power from the drive or SMC, and then verify power has been discharged before installing or removing the adapter.

1. Remove **ALL** power from the drive or SMC.
2. Use static control precautions.
3. Remove the drive or SMC cover or open the drive door.
4. Connect the Internal Interface cable to the DPI port on the drive and then to the DPI connector on the adapter (see Figure 3).
5. Secure and ground the adapter to the drive or SMC (see Figure 4) by doing the following:
   - On a PowerFlex 70 drive, fold the Internal Interface cable behind the adapter and mount the adapter on the drive using the four captive screws.
   - On an SMC Flex, put the wire lug between the mounting screw and 20-COMM-ER board

Important: Tighten all screws to properly ground the adapter. Recommended torque is 0.9 N•m (8.0 lb•in).

Figure 3 - DPI Ports and Internal Interface Cables

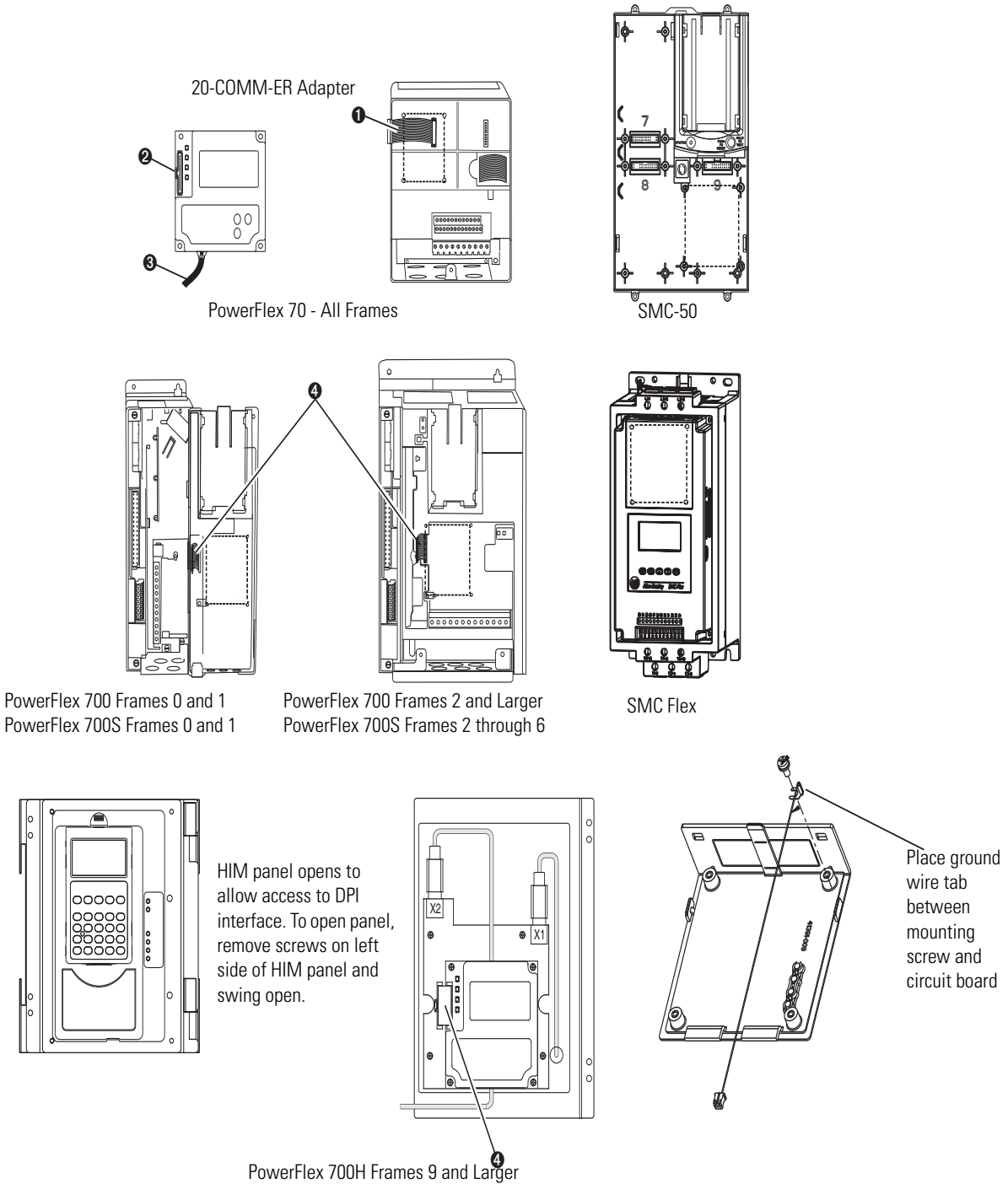

Item	Description
❶	15.24 cm (6 in.) Internal Interface cable
❷	DPI Connector
❸	Ethernet cable
❹	2.54 cm (1 in.) Internal Interface cable

Figure 4 - Mounting and Grounding the Adapter

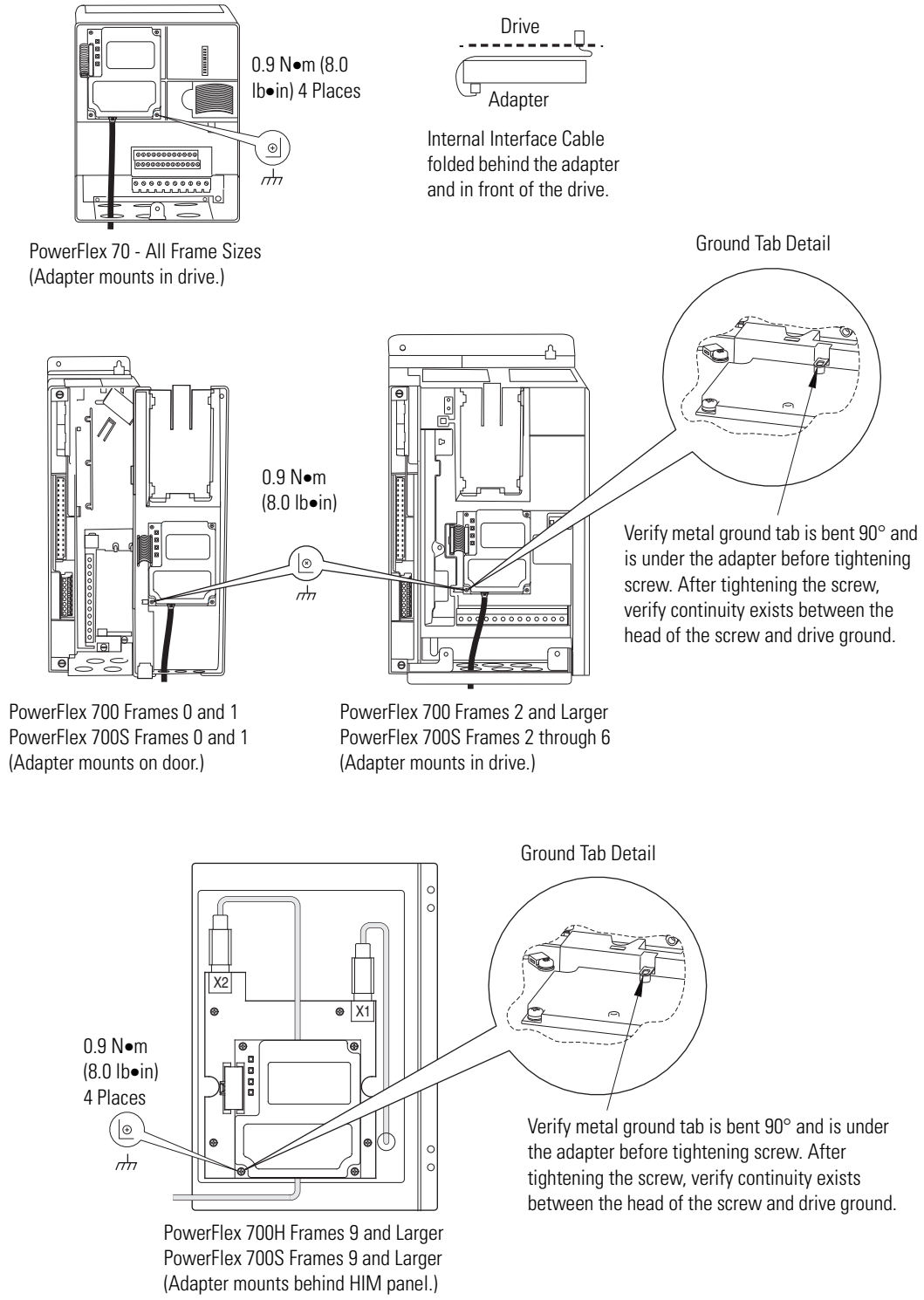

Connecting the Adapter to the Network

ATTENTION: Risk of injury or death exists. The PowerFlex drive may contain high voltages that can cause injury or death. Remove power from the drive, and then verify power has been discharged before installing or removing the adapter.

1. Remove power from the drive.
2. Use static control precautions.
3. Connect one end of an Ethernet cable to the network. See Figure 5 for an example of wiring to an EtherNet/IP network.

Figure 5 - Connecting the Ethernet Cable in a Linear Topology Network

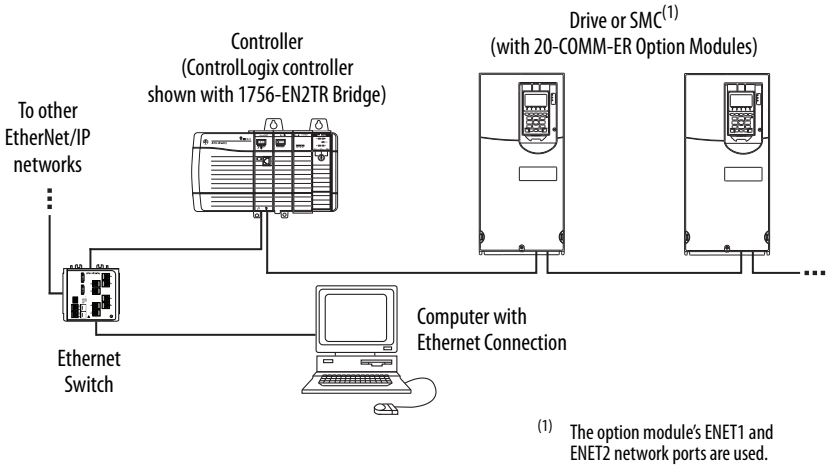

Figure 6 - Connecting the Ethernet Cable in a DLR Topology Network

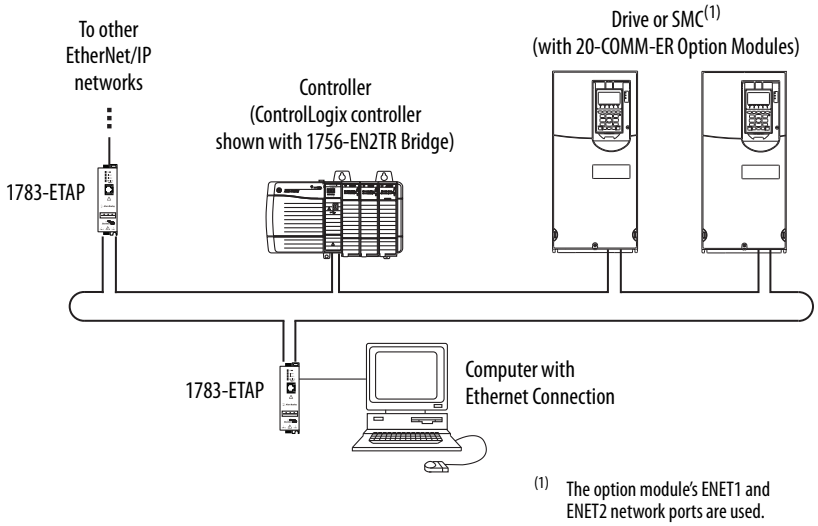

4. For Linear or DLR Network Topology, route the other end of the Ethernet cable from the network through the bottom of the first drive, and insert its cable plug into the option module ENET1 network port.

To connect to the second drive, attach another Ethernet cable between the first drive's option module ENET2 network port and the second drive's option module ENET1 network port.

To connect additional drives, repeat these daisy-chain connections in the same way.

5. Route the other end of the Ethernet cable through the bottom of the PowerFlex drive (Figure 4) and insert its Ethernet cable plug into the mating adapter receptacle.

Applying Power

ATTENTION: Risk of equipment damage, injury, or death exists. Unpredictable operation may occur if you fail to verify that parameter settings are compatible with your application. Verify that settings are compatible with your application before applying power to the drive.

Install the device cover or close the drive door, and apply power to the device. The adapter receives its power from the connected device. When you apply power to the adapter for the first time, its topmost PORT status indicator should be steady green or flashing green after an initialization. If it is red, there is a problem. See Chapter 7, Troubleshooting.

Start-Up Status Indications

After power has been applied, the status indicators for the device and communications adapter can be viewed on the front of the device (Figure 7). Possible start-up status indications are shown in Table 1.

Figure 7 - Drive and Adapter Status Indicators (location will vary by device)

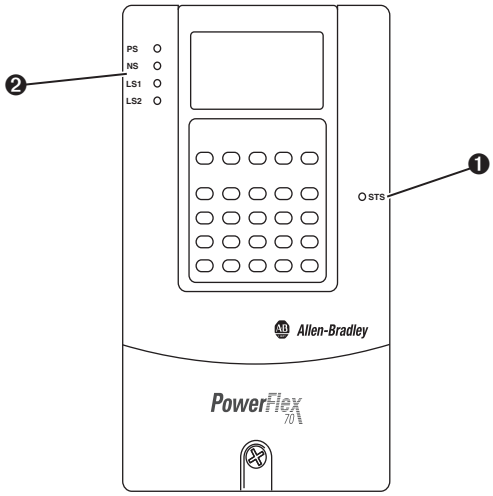

Table 1 - Drive and Adapter Start-Up Status Indications

Item	Name	Color	State	Description
			Drive STS Indicator	
❶	STS (Status) refer to drive or SMC manual for status indication information)	Green	Flashing	Device ready but not running, and no faults are present.
			Steady	Device running, no faults are present.
		Yellow	Flashing, device stopped	An inhibit condition exists – the drive cannot be started. Check device Parameter 214 - [Start Inhibits].
			Flashing, device running	An intermittent type 1 alarm condition is occurring. Check device Parameter 211 - [Drive Alarm 1].
			Steady, device running	A continuous type 1 alarm condition exists. Check device Parameter 211 - [Drive Alarm 1].
		Red	Flashing	A fault has occurred.
			Steady	A non-resettable fault has occurred.
			Adapter Status Indicators	
❷	PS	Off	Steady	No power
		Orange	Flashing	Requesting DPI I/O Connections
			Steady	Peripheral is Connected to an incompatible product or no DPI ping events are detected.
		Green	Flashing	Normal Operation (DPI connected) - No I/O, or PLC in Program
			Steady	Normal Operation (DPI connected) - I/O Operational
		Red	Flashing	DPI Problem, Bad CRC of Adapter Parameters or Flash Program
			Steady	DPI Failure or Failed power-on diagnostic test (hardware failure)
		Green/ Red	Flashing	Flash update in progress
	NS	Off	Steady	No power OR no IP Address
		Green	Flashing	An IP address is configured, but no CIP connections are established, and an Exclusive Owner connection has not timed out
			Steady	At least one CIP connection (any transport class) is established, and an Exclusive Owner connection has not timed out
		Red	Flashing	Connection has timed out see the “The EtherNet Adaptation of CIP” Specification sections 9-4.4 for detailed behavior description
			Steady	Duplicate IP Address detected
		Orange	Steady	Adapter Failure (used in conjunction with PS orange)
		Green/ Red	Flashing	Self-test on power up
	LS1	Off	Steady	No Network Activity
		Green	Flashing	Network activity at 100 Mbps
		Yellow	Flashing	Network activity at 10 Mbps
	LS2	Off	Steady	No Network Activity
		Green	Flashing	Network activity at 100 Mbps
		Yellow	Flashing	Network activity at 10 Mbps

After verifying correct operation, close or install the drive cover. For more details on status indicator operation, see page 144 and page 145.

Configuring and Verifying Key Drive Parameters

The PowerFlex 7-Class drive can be separately configured for the control and Reference functions in various combinations. For example, you could set the drive to have its control come from a peripheral or terminal block with the Reference coming from the network. Or you could set the drive to have both its control and Reference come from the network.

The following steps in this section assume that the drive will receive the Logic Command and Reference from the network.

1. Use drive Parameter 090 - [Speed Ref A Sel] to set the drive speed Reference to '22' (DPI Port 5).
2. If hard-wired discrete digital inputs are not used to control the drive, verify that unused digital input drive Parameters 361 - [Dig In1 Sel] and 362 - [Dig In2 Sel] are set to '0' (Not Used).
3. Verify that drive Parameter 213 - [Speed Ref Source] is reporting that the source of the Reference to the drive is '22' (DPI Port 5).

   This ensures that any Reference commanded from the network can be monitored by using drive Parameter 002 - [Commanded Speed]. If a problem occurs, this verification step provides the diagnostic capability to determine whether the drive/adapter or the network is the cause.

Commissioning the Adapter

To commission the adapter, you must set a unique IP address on the network. After installing the adapter and applying power, you can set the IP address by using a BOOTP/DHCP server or adapter parameters. See Setting the IP Address, Subnet Mask, and Gateway Address on page 32 for details.

By default, the adapter is configured so that you must set the IP address using a BOOTP/DHCP server or by setting the adapter to a valid address, 1-254, via the rotary switches on the adapter. An invalid address 0 or >254 will cause the module to defer to the addressing mode selected by parameter 3 [BOOTP/DHCP]. If disabled, the adapter will use the address information stored in the adapters database. If that address is invalid, the adapter will try to contact a DHCP server on the network. To use adapter parameters, you must disable the BOOTP feature. For details, see Disable the BOOTP Feature on page 32.

Important: New settings for some adapter parameters (for example, **Parameters 04 - [IP Addr Cfg 1]** through **07 - [IP Addr Cfg 4]**) are recognized only when power is applied to the adapter or it is reset. After you change parameter settings, cycle power or reset the adapter.

Configuring the Adapter

This chapter provides instructions and information for setting the parameters in the adapter.

Topic	Page
Configuration Tools	27
Using the PowerFlex 7-Class HIM	28
Using BOOTP	29
Setting the IP Address, Subnet Mask, and Gateway Address	32
Setting the Data Rate	34
Setting the I/O Configuration	35
Selecting Master-Slave or Peer-to-Peer	36
Setting the Reference Adjustment	41
Setting a Fault Action	41
Setting Web Access Control	42
Resetting the Adapter	43
Viewing the Adapter Status Using Parameters	44
Updating the Adapter Firmware	44

For a list of parameters, see Appendix B, Adapter Parameters. For definitions of terms in this chapter, see the .

Configuration Tools

The adapter stores parameters and other information in its own nonvolatile storage (NVS) memory. You must, therefore, access the adapter to view and edit its parameters. The following tools can be used to access the adapter parameters.

Tool	See
PowerFlex 7-Class HIM	page 28
BOOTP/DHCP server	page 29
Connected Components Workbench software, version 1.02 or later	http://www.ab.com/support/abdrives/webupdate/software.html, or online help (installed with the software)

Using the PowerFlex 7-Class HIM

If your drive has either an LED or LCD HIM (Human Interface Module), it can be used to access parameters in the adapter as shown below. It is recommended that you read through the steps for your HIM before performing the sequence. For additional information, see the drive documentation or the PowerFlex 7-Class HIM Quick Reference, publication 20HIM-QR001.

Using an LED HIM

Step	Example Screens
1. Press the ALT key and then the Device Sel (Sel) key to display the Device Screen. 2. Press the ▲ or ▼ key to scroll to the adapter. Letters represent files in the drive, and numbers represent ports. The adapter is usually connected to port 5. The adapter is usually connected to port 5. 3. Press the ↵ (Enter) key to enter your selection. A parameter database is constructed, and then the first parameter is displayed. 4. Edit the parameters using the same techniques that you use to edit drive parameters.	

Using an LCD HIM

Step	Example Screens
1. In the main menu, press the ▲ or ▼ key to scroll to **Device Select**. 2. Press the ↵ (Enter) key to enter your selection. 3. Press the ▲ or ▼ key to scroll to the adapter (20-COMM-ER). 4. Press the ↵ (Enter) key to select the adapter. A parameter database is constructed, and then the main menu for the adapter is displayed. 5. Edit the parameters using the same techniques that you use to edit drive parameters.	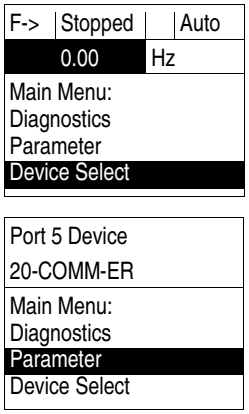

NOTE: All configuration procedures throughout this chapter use the PowerFlex 7-Class LCD HIM to access parameters in the adapter and show example LCD HIM screens.

TIP When using a PowerFlex 20-HIM-A6 or 20-HIM-C6S HIM, see its User Manual, publication 20-HIM-UM001.

SMC Flex controllers require an external HIM (A3 or A6) to program the adapter. The internal Human Interface of the SMC Flex does not allow programming of the Adapter.

Using BOOTP

The IP address, subnet mask and gateway address can be configured multiple ways depending on the setting of the three rotary switches on the adapter. The switches are read on power up or reset.

1. If the switches are set to an address from 1...254, that value will be used as the LSB of the IP address 192.168.1.xxx
2. If the switches are set to an invalid number (000 or a value greater than 254), the unit will check if DHCP is enabled. If DHCP is enabled, the unit requests an address from a DHCP server.
   If DHCP is not enabled and switches are set to an illegal value, the adapter will use the IP address (along with other TCP configurable parameters) stored in nonvolatile memory. If the unit finds that the stored IP configuration is not usable (set to 0), then the unit will revert to the out-of-box behavior of DHCP being enabled.
3. Any other switch setting will cause the adapter to use the IP address data set in the adapter's database parameters.

By default, the adapter is configured so that you can set its IP address, subnet mask, and gateway address by using a BOOTP or a DHCP server. There is a variety of BOOTP servers available. The following instructions use Rockwell Automation's BOOTP Server, version 2.3 or later, a **free** standalone program that incorporates the functionality of standard BOOTP utilities with a graphical interface. It is available from http://www.software.rockwell.com/support/download/detail.cfm?ID=3390. See the Readme file and online Help for directions and more information.

TIP If desired, you can disable BOOTP and configure the IP address, subnet mask, and gateway address with adapter parameters. For details, see Setting the IP Address, Subnet Mask, and Gateway Address on page 32.

Configure the Adapter Using a BOOTP Server

1. On the adapter label, note the adapter's hardware Ethernet Address (MAC), which will be used in step 6.
2. On a computer connected to the EtherNet/IP network, start the BOOTP software.

The BOOTP Server window appears.

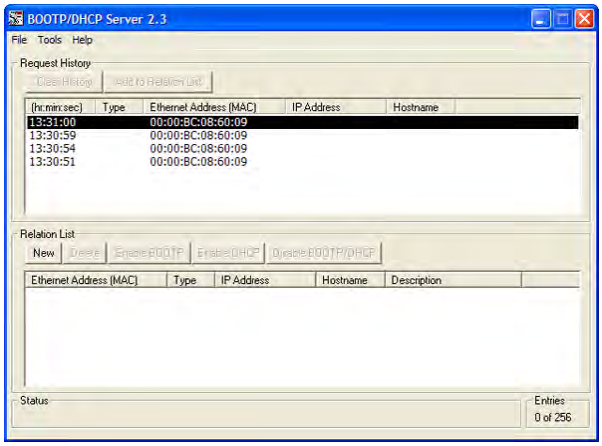

3. Select **Tools > Network Settings** to display the Network Settings window.

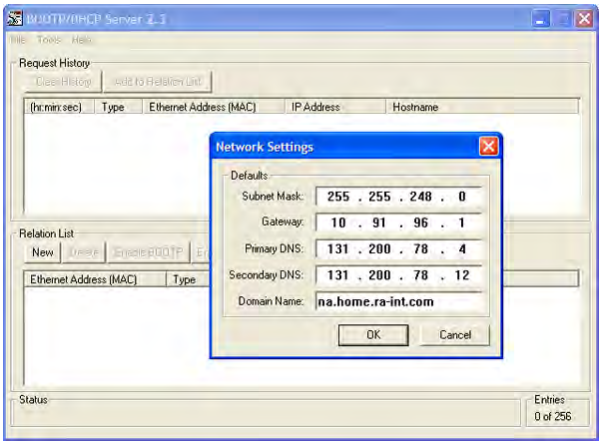

To properly configure devices on your EtherNet/IP network, you must configure settings in the BOOTP software to match the network.

4. Edit the following:

Box	Type
Subnet Mask (1)	The subnet mask for the adapter's network.
Gateway (1)	The IP address of the gateway device on the adapter's network.
Primary DNS	The address of the primary DNS server to be used on the local end of the link for negotiating with remote devices.
Secondary DNS	Optional — the address of the secondary DNS server to be used on the local end of the link for negotiating with remote devices when the primary DNS server is unavailable.
Domain Name	The text name corresponding to the numeric IP address that was assigned to the server that controls the network.

(1) For definitions of these terms, refer to the .

5. Click **OK** to apply the settings.

Devices on the network issuing BOOTP requests appear in the BOOTP Request History list.

6. In the BOOTP Request History list, either double-click the adapter's Ethernet Address (MAC) noted in Step 1, or click **New** in the Relation List.

   The New Entry dialog box appears.

   In the first case, the Ethernet Address (MAC) is automatically entered. In the latter case, you must manually enter it.

7. Edit the following:

Box	Type
IP Address	A unique IP address for the adapter
Host Name	Optional
Description	Optional

8. Click **OK** to apply the settings.

   The adapter appears in the Relation List with the new settings.

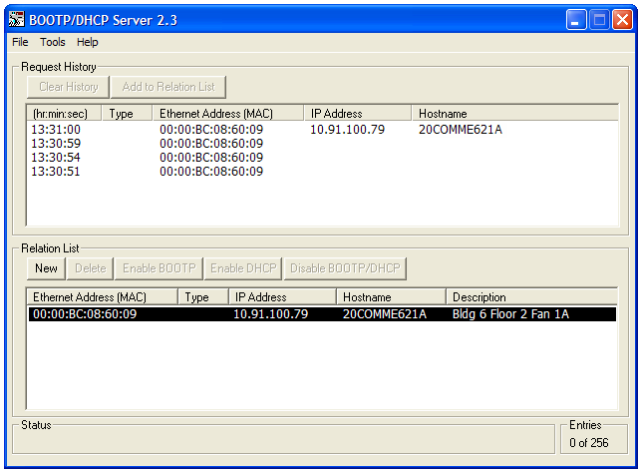

9. To assign this configuration to the adapter permanently, select the device in the Relation List and click **Disable BOOTP/DHCP**.

   When power is cycled on the adapter, it will use the configuration you assigned it and not issue new BOOTP requests.

TIP To enable BOOTP for an adapter that has had BOOTP disabled, first select the adapter in the Relation List, then click **Enable BOOTP**, and lastly reset the adapter or power cycle the drive.

10. Select **File > Save** to save the Relation List.

Setting the IP Address, Subnet Mask, and Gateway Address

By default, the adapter is configured so that you set its IP address, subnet mask, and gateway address using a BOOTP/DHCP server. To use adapter parameters instead, you must disable BOOTP/DHCP and then set the associated adapter parameters.

The IP address can be set using the rotary switches on the adapter to an address from 1...254 that will be used as the lower byte of the IP address 192.168.1.xxx. The Subnet mask will be set to 255.255.255.0.

If the rotary switches are set to any invalid address (0 or >254), the address programmed in the adapter's internal data base will be used.

Disable the BOOTP Feature

1. Set the value of **Parameter 03 - [BOOTP/DHCP]** to '0' (Disabled).

Port 5 Device
20-COMM-ER
Parameter #: 03 BOOTP 0 Disabled

Value	Setting
0	Disabled
1	Enabled (Default)

Note: The internal port used by the adapter is different for different products. The examples here show port 5, used by the SMC Flex and drive products. The SMC-50 uses port 4.

2. Reset the adapter; see Resetting the Adapter on page 43.

After disabling the BOOTP/DHCP feature, you can then configure the IP address, subnet mask, and gateway address using adapter parameters.

Set an IP Address Using Parameters

1. Verify that **Parameter 03 - [BOOTP/DHCP]** is set to '0' (Disabled).

2. Set the value of **Parameters 04 - [IP Addr Cfg 1]** through **07 - [IP Addr Cfg 4]** to a unique IP address.

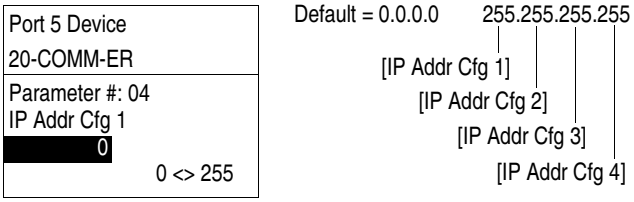

3. Reset the adapter; see Resetting the Adapter on page 43.

The Network status indicator will be steady green or flashing green if the IP address is correctly configured, and is connected to an operating ethernet network.

Set a Subnet Mask Using Parameters

1. Verify that **Parameter 03 - [BOOTP/DHCP]** is set to '0' (Disabled).
2. Set the value of **Parameters 08 - [Subnet Cfg 1]** through **11 - [Subnet Cfg 4]** to the desired value for the subnet mask.

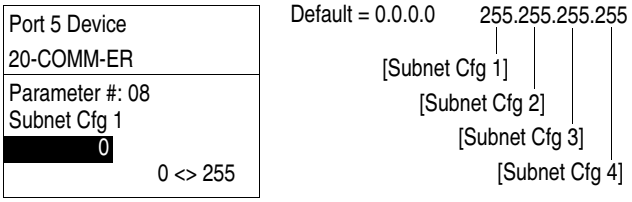

3. Reset the adapter; see Resetting the Adapter on page 43.

Set a Gateway Address Using Parameters

1. Verify that **Parameter 03 - [BOOTP]** is set to '0' (Disabled).
2. Set the value of **Parameters 12 - [Gateway Cfg 1]** through **15 - [Gateway Cfg 4]** to the IP address of the gateway device.

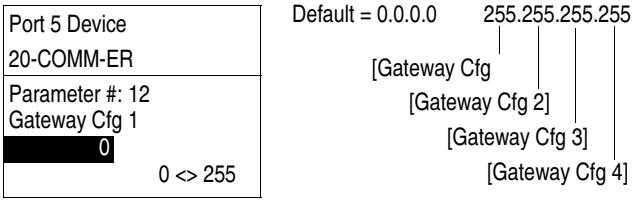

3. Reset the adapter; see Resetting the Adapter on page 43.

Setting the Data Rate

By default, the adapter is set to autodetect, so it automatically detects the data rate and duplex setting used on the network. If you need to set a specific data rate and duplex setting, the value of **Parameter 16 - [EN P1 Rate Config]** determines the Ethernet data rate and duplex setting that the adapter will use to communicate. For definitions of data rate and duplex, see Glossary on page 221.

1. Set the value of **Parameter 16 - [EN P1 Rate Config]** to the data rate at which your network is operating.

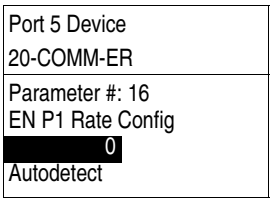

Value	Data Rate
0	Autodetect (default)
1	10 Mbps Full
2	10 Mbps Half
3	100 Mbps Full
4	100 Mbps Half

TIP Auto detection of baud rate and duplex works properly only if the device (usually a switch) on the other end of the cable is also set to automatically detect the baud rate/duplex. If one device has the baud rate/duplex hard-coded, the other device must be hard-coded to the same settings.

2. Reset the adapter; see Resetting the Adapter on page 43.

By default, the adapter is set to autodetect, so it automatically detects the data rate and duplex setting used on the network. If you need to set a specific data rate and duplex setting, the value of **Parameter 18 - [EN P2 Rate Config]** determines the Ethernet data rate and duplex setting that the adapter will use to communicate. For definitions of data rate and duplex, see Glossary on page 221.

1. Set the value of **Parameter 18 - [ENEN P2 Rate Config]** to the data rate at which your network is operating.

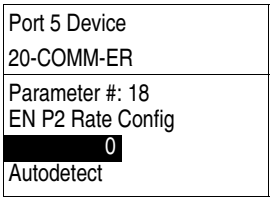

Value	Data Rate
0	Autodetect (default)
1	10 Mbps Full
2	10 Mbps Half
3	100 Mbps Full
4	100 Mbps Half

TIP Auto detection of baud rate and duplex works properly only if the device (usually a switch) on the other end of the cable is also set to automatically detect the baud rate/duplex. If one device has the baud rate/duplex hard-coded, the other device must be hard-coded to the same settings.

2. Reset the adapter; see Resetting the Adapter on page 43.

Setting the I/O Configuration

The I/O configuration determines the data that is sent to and from the drive. Logic Command/Status, Reference/Feedback, and Datalinks may be enabled or disabled. (Datalinks allow you to read/write directly to parameters in the drive using implicit I/O.) A '1' enables the I/O and a '0' disables the I/O.

1. Set the bits in **Parameter 25 - [DPI I/O Cfg]**.

Port 5 Device
20-COMM-ER
Parameter #: 25 DPI I/O Cfg x x x x x x x x x x x 0 0 0 0 **1** Cmd/Ref b00

Bit	Description
0	Logic Command/Reference (Default)
1	Datalink A
2	Datalink B
3	Datalink C
4	Datalink D
5...15	Not Used

   Bit 0 is the right-most bit. It is highlighted above and equals '1'.

2. If a controller is used to control the drive, set adapter **Parameters 37 - [M-S Input]** and **38 - [M-S Output]** for Master-Slave Hierarchy.

   For details, see Setting a Master-Slave Hierarchy (Scanner-to-Drive Communication) on page 36.

3. If Logic Command/Reference is enabled, configure the parameters in the drive to accept the Logic Command and Reference from the adapter.

   For example, set Parameter 90 - [Speed Ref A Sel] in a PowerFlex 70 or 700 drive to '22' (DPI Port 5) so that the drive uses the Reference from the adapter. Also, verify that the mask parameters (for example, Parameter 276 - [Logic Mask]) in the drive are configured to receive the desired logic from the adapter. See the documentation for your drive for details.

   The the SMC devices do not currently use the reference data sent in the IO frame. No reference configuration is required. Refer to the applicable SMC user manual for the latest reference configuration information.

4. If you enabled one or more Datalinks, configure parameters in the drive to determine the source and destination of data in the Datalink(s).

   When using Datalinks, up to 8 [Data In xx] parameters and/or up to 8 [Data Out xx] parameters must be assigned to point to the appropriate parameters for your application. See Chapter 4 for an example.

5. Reset the adapter; see Resetting the Adapter on page 43.

The adapter is ready to receive I/O. You must now configure the adapter to receive I/O from a master or peer device. See Selecting Master-Slave or Peer-to-Peer. If you select a Master-Slave hierarchy, you must also configure the master to communicate with the adapter. See Chapter 4, Configuring the I/O.

Selecting Master-Slave or Peer-to-Peer

A hierarchy determines the type of device with which the adapter exchanges data. In a Master-Slave hierarchy, the adapter exchanges data with a master, such as a scanner or bridge (1756-ENBT, 1756-EN2T, 1747-L5-xxx, and so forth). In a Peer-to-Peer hierarchy, the adapter exchanges data with one or more EtherNet/IP adapters in other devices. (The devices must have compatible Logic Command/Status words.)

For both Master-Slave and Peer-to-Peer hierarchies, the devices exchanging data must be on the same IP subnet. See 'IP Addresses' in the for information about IP subnets.

Setting a Master-Slave Hierarchy (Scanner-to-Drive Communication)

1. Enable the desired I/O in **Parameter 25 - [DPI I/O Cfg]**.

   See Setting the I/O Configuration on page 35.

2. Set the bits in **Parameter 37 - [M-S Input]**.

   This parameter determines the data received from the master by the device. A '1' enables the I/O and a '0' disables the I/O.

Port 5 Device 20-COMM-ER
Parameter #: 37 M-S Input x x x x x x x x x x x 0 0 0 0 **1** Cmd/Ref b00

Bit	Description
0	Logic Command/Reference (Default)
1	Datalink A Input
2	Datalink B Input
3	Datalink C Input
4	Datalink D Input
5...15	Not Used

   Bit 0 is the right-most bit. It is highlighted above and equals '1'.

3. Set the bits in **Parameter 38 - [M-S Output]**.

   This parameter determines the data transmitted from the device to the scanner. A '1' enables the I/O and a '0' disables the I/O.

Port 5 Device 20-COMM-ER
Parameter #: 38 M-S Output x x x x x x x x x x x 0 0 0 0 **1** Status/Fdbk b00

Bit	Description
0	Status/Feedback (Default)
1	Datalink A Output
2	Datalink B Output
3	Datalink C Output
4	Datalink D Output
5...15	Not Used

   Bit 0 is the right-most bit. It is highlighted above and equals '1'.

4. Reset the adapter; see Resetting the Adapter on page 43.

The adapter is ready to receive I/O from the master (that is, scanner). You must now configure the scanner to recognize and transmit I/O to the adapter. See Chapter 4, Configuring the I/O.

Setting the Adapter to Transmit Peer-to-Peer Data (Drive-to-Drive Communication)

1. Verify that **Parameter 53 - [Peer Out Enable]** is set to '0' (Off).

   This parameter must be Off while you configure peer output parameters.

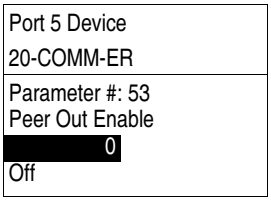

Value	Setting
0	Off (Default)
1	On

2. Set **Parameter 51 - [Peer A Output]** to select the source of the data to output to the network.

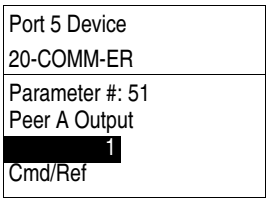

Value	Description
0	Off (Default)
1	Logic Command/Reference
2…5	Datalink A, B, C, or D Input
6…9	Datalink A, B, C, or D Output

3. If desired, set **Parameter 52 - [Peer B Output]** to select an additional source of the data to output to the network.

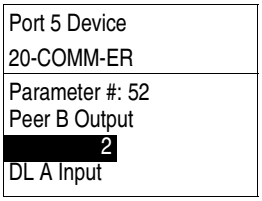

Value	Description
0	Off (Default)
1	Logic Command/Reference
2…5	Datalink A, B, C, or D Input
6…9	Datalink A, B, C, or D Output

4. Set **Parameters 54 - [Peer Out Time]** and **55 - [Peer Out Skip]** to establish the minimum and maximum intervals between peer messages.

Because the adapter transmits peer messages when a change-of-state condition occurs, minimum and maximum intervals are required.

– The minimum interval ensures that the adapter does not transmit messages on the network too often, thus minimizing network traffic. Set it with **Parameter 54 - [Peer Out Time]**.

– The maximum interval ensures that the adapter transmits messages often enough so that the receiving adapter(s) can receive recent data and verify that communications are working or, if communications are not working, can timeout. The maximum interval is the value of **Parameter 54 - [Peer Out Time]** multiplied by the value of **Parameter 55 - [Peer Out Skip]**.

In the example below, the minimum interval is set to 2.00 seconds (**Parameter 54 - [Peer Out Time]**), and the maximum interval is set to 4.00 seconds (2.00 x ‘2’ setting of **Parameter 55 - [Peer Out Skip]**).

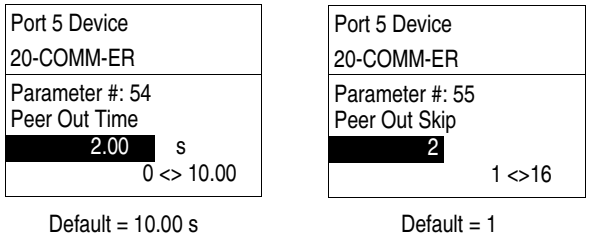

5. Set **Parameter 53 - [Peer Out Enable]** to ‘1’ (On).

The adapter will transmit the data selected in **Parameters 51 - [Peer A Output]** and **52 - [Peer B Output]** to the network. Another adapter must be configured to receive the peer I/O data.

Setting the Adapter to Receive Peer-to-Peer Data

1. Verify that **Parameter 49 - [Peer Inp Enable]** is set to ‘0’ (Off).

This parameter must be Off while you configure the peer input parameters.

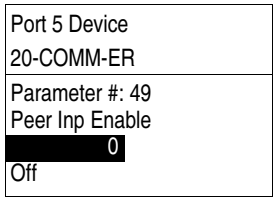

Value	Setting
0	Off (Default)
1	On

2. Set **Parameters 44 - [Peer Inp Addr 1]** through **47 - [Peer Inp Addr 4]** to the IP address of the node from which you want to receive data.

Valid nodes must have 20-COMM-ER adapters connected to drives with compatible Logic Command/Status words.

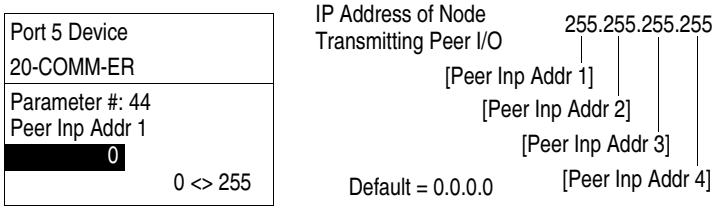

3. Set **Parameter 40 - [Peer A Input]** to select the destination of the data that is input to the drive as Peer A.

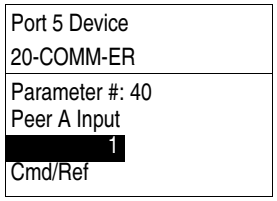

Value	Description
0	Off (Default)
1	Logic Command/Reference
2…5	Datalink A, B, C, or D Input

Data is used from the least significant word in the event of a mismatch in Reference or Datalink sizes.

4. If desired, set **Parameter 41 - [Peer B Input]** to select the destination of the data to input to the device as Peer B.

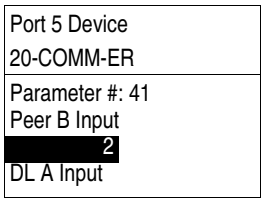

Value	Description
0	Off (Default)
1	Logic Command/Reference
2…5	Datalink A, B, C, or D Input

5. If the adapter receives a Logic Command, set the bits in **Parameter 42 - [Peer Cmd Mask]** that the device should use.

The bit definitions for the Logic Command word will depend on the drive to which the adapter is connected. See Appendix D or the device documentation.

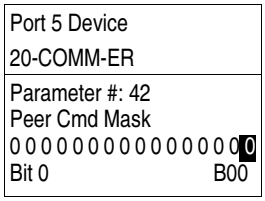

Value	Description
0	Ignore this command bit. (Default)
1	Use this command bit.

If the adapter receives a Logic Command from both a master device and a peer device, each command bit must have only one source. The source of command bits set to ‘0’ will be the master device. The source of command bits set to ‘1’ will be the peer device.

6. Reset the adapter (see Resetting the Adapter on page 43) so that changes to **Parameter 42 - [Peer Cmd Mask]** take effect.
7. Set **Parameter 48 - [Peer Inp Timeout]** to the maximum amount of time the adapter will wait for a message before timing out.

Important: This value must be greater than the product of **Parameter 54 - [Peer Out Time]** multiplied by **Parameter 55 - [Peer Out Skip]** in the adapter from which you are receiving I/O.

For example, if the value of **Parameter 54 - [Peer Out Time]** is 2.00 seconds and the value of **Parameter 55 - [Peer Out Skip]** is 2 (see example screen in step 4 on page 37), then **Parameter 48 - [Peer Inp Timeout]** needs to have a value greater than 4.00, such as 5.00 in the example screen below.

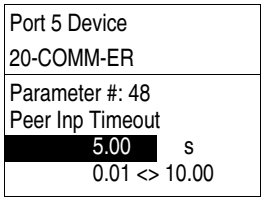

Default = 10.00 s

8. Set **Parameter 43 - [Peer Flt Action]** to the action that the adapter will take if it times out.

ATTENTION: Risk of injury or equipment damage exists. **Parameter 43 - [Peer Flt Action]** lets you determine the action of the adapter and connected device if peer communication is disrupted. By default, this parameter faults the device. You can set this parameter so that the device continues to run, however, precautions should be taken to ensure that the setting of this parameter does not create a hazard of injury or equipment damage. When commissioning the device, verify that your system responds correctly to various situations (for example, a disconnected cable).

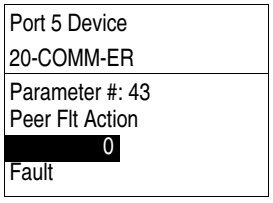

Value	Description
0	Fault (Default)
1	Stop
2	Zero Data
3	Hold Last
4	Send Flt Cfg

For more details, see Setting a Fault Action on page 41.

9. Set **Parameter 49 - [Peer Inp Enable]** to '1' (On).

The adapter is now configured to receive peer I/O from the specified node. Ensure that the specified node is configured to transmit peer I/O.

Setting the Reference Adjustment

A Reference Adjustment is a percent scaling factor for the Reference from the network. It can be set from 0.00...200.00% to allow the drive's Reference to either match the network Reference (= 100.00%), scale below the network Reference (< 100.00%), or scale above the network Reference (> 100.00%).

The SMC controllers do not currently use the reference data sent in the IO frame. No Reference configuration is required. Refer to the applicable SMC user manual for the latest reference configuration information.

ATTENTION: To guard against equipment damage and/or personal injury, note that changes to adapter **Parameter 39 - [Ref Adjust]** take effect immediately. A drive receiving its Reference from the adapter will receive the newly scaled Reference, resulting in a change of speed.

If the adapter is receiving a Reference, set **Parameter 39 - [Ref Adjust]** to the desired scaling factor.

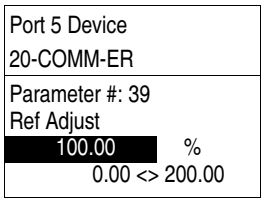

Default = 100.00%

The adjustment takes effect as soon as it is entered.

Setting a Fault Action

By default, when I/O communication is disrupted (for example, a cable is disconnected) or the controller is idle (in program mode or faulted), the drive responds by faulting if it is using I/O from the network. You can configure a different response to these events:

- Disrupted I/O communication by using **Parameter 23 - [Comm Flt Action]**
- An idle controller by using **Parameter 24 - [Idle Flt Action]**

ATTENTION: Risk of injury or equipment damage exists. **Parameters 23 - [Comm Flt Action]** and **24 - [Idle Flt Action]** let you determine the action of the adapter and connected device if I/O communication is disrupted or the controller is idle. By default, these parameters fault the device. You can set these parameters so that the device continues to run, however, precautions should be taken to ensure that the settings of these parameters do not create a risk of injury or equipment damage. When commissioning the device, verify that your system responds correctly to various situations (for example, a disconnected cable or faulted controller).

Changing the Fault Action

Set the values of **Parameters 23 - [Comm Flt Action]** and **24 - [Idle Flt Action]** to any of these desired responses.

Value	Action	Description
0	Fault	The device is faulted and stopped. (Default)
1	Stop	The device is stopped, but not faulted.
2	Zero Data	The device is sent 0 for output data. This does not command a stop.
3	Hold Last	The device continues in its present state.
4	Send Flt Cfg	The device is sent the data that you set in the fault configuration parameters (**Parameters 27 - [Flt Cfg Logic]** through **36 - [Flt Cfg D2 In]**).

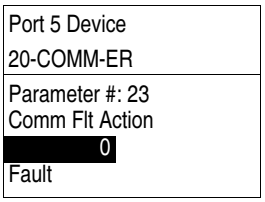

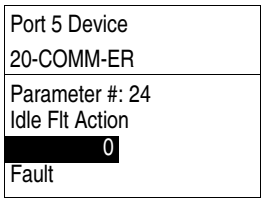

Changes to these parameters take effect immediately. A reset is not required.

If communication is disrupted and then is re-established, the drive will automatically take commands from the network again.

Setting the Fault Configuration Parameters

If you set **Parameter 23 - [Comm Flt Action]** or **24 - [Idle Flt Action]** to 'Send Flt Cfg', the values in the following parameters are sent to the drive after an I/O communications fault and/or idle fault occurs. You must set these parameters to values required by your application.

Parameter	Description
27 - [Flt Cfg Logic]	A 16-bit value sent to the device for Logic Command.
28 - [Flt Cfg Ref]	A 32-bit value (0…4294967295) sent to the device as a Reference or Datalink. **Important:** If the device uses a 16-bit Reference or 16-bit Datalinks, the most significant word of the value must be set to zero (0) or a fault will occur.
29 - [Flt Cfg x1 In] through **36 - [Flt Cfg x2 In]**	

Changes to these parameters take effect immediately. A reset is not required.

Setting Web Access Control

By using a web browser to access the IP address set for the adapter, you can view the adapter's web pages for information about the adapter, its connected device, and other DPI devices connected to the device, such as HIMs or converters. Additionally, the adapter can be configured to automatically send e-mail messages

to desired addresses when selected device faults occur and/or are cleared, and/or when the adapter takes a communication or idle fault action. For more details on the adapter's web pages, refer to Chapter 8, Viewing the Adapter Web Pages.

By default, the adapter web pages are disabled. See Figure 2 and set the Web Pages Switch (SW4) to the 'Enable Web' (up) position. **Parameter 56 [Web Enabled]** reflects the position of the web enable DIP switch on the adapter.

Important: For a change to the switch setting to take effect, the adapter must be reset (see Resetting the Adapter on page 43).

Bit 0 of **Parameter 57 - [Web Features]** is used to protect the configured settings for e-mail messaging. By default, settings are not protected and the user can make changes. To protect the configured settings, set the value of E-mail Cfg Bit 0 to '0' (Disabled). You can unprotect the configuration by changing Bit 0 back to '1' (Enabled). E-mail messaging will always remain active regardless of whether or not its settings are protected—unless e-mail messaging was **never** configured. For more information about configuring adapter e-mail messaging or to stop e-mail messages, see Email Configuration Link on page 162.

Port 5 Device 20-COMM-ER
Parameter #: 57 Web Features x x x x x x x x x x x x x x x **1** E-mail Cfg b00

Bit	Description
0	E-mail Cfg (Default = 0 = Disabled)
1…7	Not Used

Bit 0 is the right-most bit. It is highlighted above and equals '1'.

Changes to this parameter take effect immediately. A reset is not required.

Resetting the Adapter

Changes to switch settings and some adapter parameters require that you reset the adapter before the new settings take effect. You can reset the adapter by power cycling the drive or by using **Parameter 22- [Reset Module]**.

ATTENTION: Risk of injury or equipment damage exists. If the adapter is transmitting control I/O to the drive, the drive may fault when you reset the adapter. Determine how your drive will respond before resetting a connected adapter.

Set **Parameter 22 - [Reset Module]** to '1' (Reset Module).

Port 5 Device 20-COMM-ER
Parameter #: 22 Reset Module **1** Reset Module

Value	Description
0	Ready (Default)
1	Reset Module
2	Set Defaults

When you enter '1' (Reset Module), the adapter will be immediately reset. When you enter '2' (Set Defaults), the adapter will set all adapter parameters to their factory-default values. After performing a Set Defaults, enter '1' (Reset Module) so that the new values take effect. The value of this parameter will be restored to '0' (Ready) after the adapter is reset.

Viewing the Adapter Status Using Parameters

The following parameters provide information about the status of the adapter. You can view these parameters at any time.

Parameter	Description
17 - [EN P1 Rate Act]	The data rate used on port 1 of the adapter
19 - [EN P2 Rate Act]	The data rate used on port 2 of the adapter
20 - [Ref/Fdbk Size]	The size of the Reference/Feedback. It will either be 16 bits or 32 bits. It is set in the device and the adapter automatically uses the correct size.
21 - [Datalink Size]	The size of the Datalinks. It will either be 16 bits or 32 bits. It is set in the device and the adapter automatically uses the correct size.
26 - [DPI I/O Act]	The Reference/Feedback and Datalinks used by the adapter. This value is the same as **Parameter 25 - [DPI I/O Cfg]** unless the parameter was changed and the adapter was not reset. Bit Definition: Not Used | Not Used | Not Used | Datalink D | Datalink C | Datalink B | Datalink A | Cmd/Ref Default: x | x | x | 0 | 0 | 0 | 0 | 1 Bit: 7 | 6 | 5 | 4 | 3 | 2 | 1 | 0 0 = I/O disabled 1 = I/O enabled
50 - [Peer Inp Status]	The status of the consumed peer input connection. Values 0 = Off 1 = Waiting 2 = Running 3 = Faulted

Updating the Adapter Firmware

The adapter firmware can be updated over the network or serially through a direct connection from a computer to the drive using a 1203-USB or 1203-SSS serial converter.

When updating firmware over the network, you can use the Allen-Bradley ControlFLASH software tool, the built-in update capability of DriveExplorer Full software, or the built-in update capability of DriveExecutive software.

When updating firmware through a direct serial connection from a computer to a drive, you can use the same Allen-Bradley software tools described above, or you can use terminal emulation software set to the X-modem protocol.

If using a direct serial connection, you can use DriveExplorer Lite software.

To obtain a firmware update for this adapter, go to http://www.ab.com/support/abdrives/webupdate. This website contains all firmware update files and associated Release Notes that describe the following items:

- Firmware update enhancements and anomalies
- How to determine the existing firmware revision
- How to update firmware using DriveExplorer, DriveExecutive, ControlFLASH, or HyperTerminal software

Configuring the I/O

This chapter provides instructions on how to configure a Rockwell Automation ControlLogix or MicroLogix 1100/1400 controller to communicate with the adapter and connected PowerFlex drive.

Topic	Page
Using RSLinx Classic Software	47
ControlLogix Controller Example	48
MicroLogix 1100/1400 Controller Example	68

Using RSLinx Classic Software

RSLinx Classic software, in all its variations (Lite, Gateway, OEM, and so forth), is used to provide a communication link between the computer, network, and controller. RSLinx Classic software requires its network-specific driver to be configured before communication is established with network devices. To configure the RSLinx driver, follow this procedure.

1. Start RSLinx Classic software and select **Communications > Configure Drivers** to display the Configure Drivers screen.
2. From the Available Driver Types pull-down menu, choose EtherNet/IP Driver.
3. Click **Add New...** to display the Add New RSLinx Driver screen.
4. Use the default name or type a new name and click **OK**. The 'Configure driver:' screen appears.
5. Depending on your application, select either the browse local or remote subnet option.
6. Click **OK**.

The Configure Drivers screen reappears with the new driver in the Configured Drivers list.

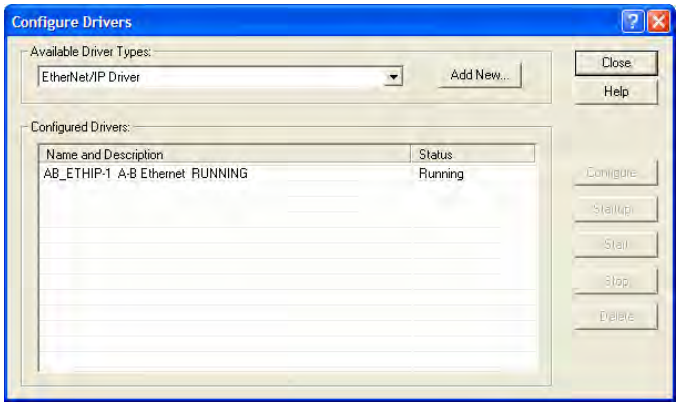

7. Click **Close** to close the Configure Drivers screen.
8. Keep RSLinx running and verify that the computer recognizes the drive.
   a. Select **Communications > RSWho**.
   b. In the menu tree, click '+' next to the Ethernet driver.

   If the 'EtherNet/IP driver' cannot see your drive, as an alternative, use either the 'Ethernet devices' or 'Remote Devices via Linx Gateway' RSLinx driver.

ControlLogix Controller Example

After the adapter is configured, the connected drive and adapter will be a single node on the network. This section provides the steps needed to configure a simple EtherNet/IP network (see Figure 8). In our example, we will configure a ControlLogix controller with 1756-ENBT (Series A) bridge to communicate with a drive using Logic Command/Status, Reference/Feedback, and 16 Datalinks (8 to read and 8 to write) over the network.

Figure 8 - Example ControlLogix EtherNet/IP Network

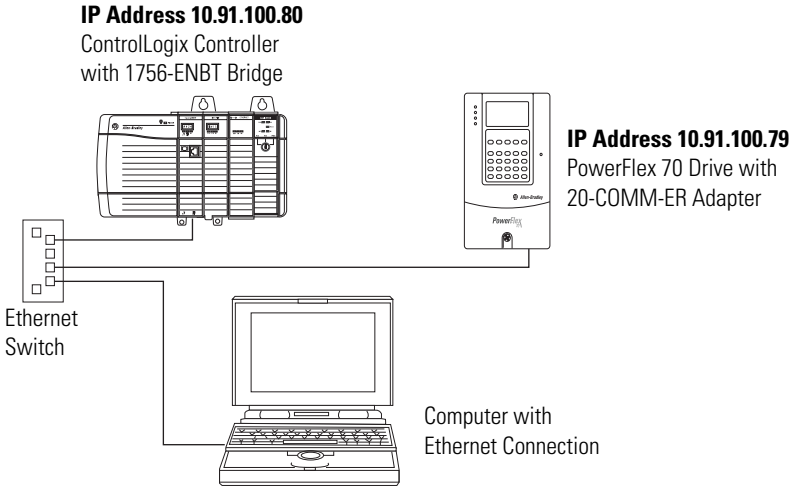

Adding the Bridge to the I/O Configuration

To establish communications between the controller and adapter over the network, you must first add the ControlLogix controller and its bridge to the I/O configuration. This procedure is similar for all RSLogix 5000 versions.

1. Start RSLogix 5000 software.
2. Select **File > New** to display the New Controller screen.

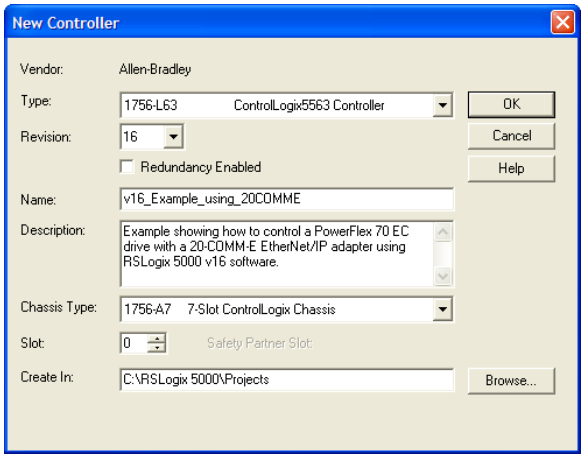

   a. Choose the appropriate choices for the fields in the screen to match your application.
   b. Click **OK**.

      The RSLogix 5000 window reappears with the treeview in the left pane.

3. In the treeview, right-click the I/O Configuration folder and choose **New Module...**

The Select Module screen appears.

4. Expand the Communications group to display all of the available communication modules.

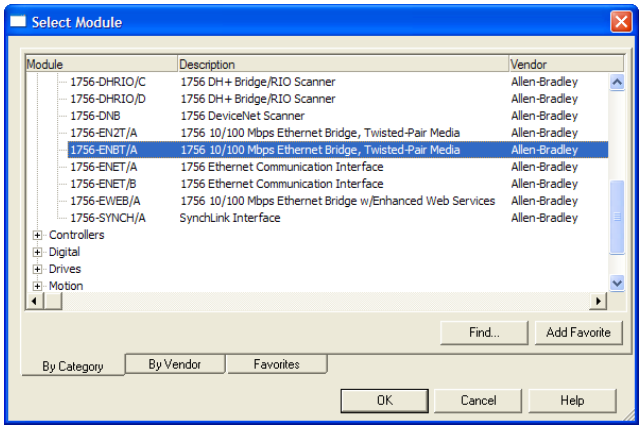

5. In the list, select the EtherNet/IP bridge used by your controller.

In this example, we use a 1756-ENBT EtherNet/IP Bridge (Series A), so the 1756-ENBT/A option is selected.

6. Click **OK**.
7. In the Select Major Revision pop-up dialog box, select the major revision of its firmware.
8. Click **OK**.

The bridge's New Module screen appears.

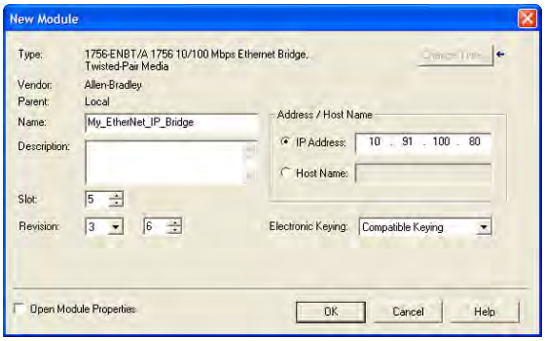

9. Edit the following:

Box	Setting
Name	A name to identify the EtherNet/IP bridge.
Description	Optional – description of the EtherNet/IP bridge.
IP Address	The IP address of the EtherNet/IP bridge.
Host Name	Not used.
Slot	The slot of the EtherNet/IP bridge in the rack.
Revision	The minor revision of the firmware in the bridge. (You already set the major revision by selecting the bridge series in step 5.)
Electronic Keying	**Compatible Keying**. The 'Compatible Keying' setting for Electronic Keying ensures the physical module is consistent with the software configuration before the controller and bridge make a connection. Therefore, be sure that you have set the correct revision in this screen. See the online Help for additional information on this and other Electronic Keying settings. If keying is not required, select 'Disable Keying'. Disable keying is recommended.
Open Module Properties	When this box is checked, clicking **OK** opens additional module properties screens to further configure the bridge. When unchecked, clicking **OK** closes the bridge's New Module screen. For this example, uncheck this box.

10. Click **OK**.

The bridge is now configured for the EtherNet/IP network, added to the RSLogix 5000 project, and appears in the I/O Configuration folder. In our example, a 1756-ENBT bridge appears under the I/O Configuration folder with its assigned name.

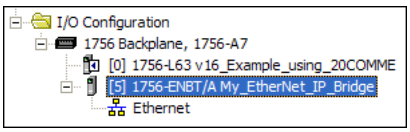

For convenience, keep the project open. Later in this chapter the project will need to be downloaded to the controller.

There are three ways to add the adapter into the I/O configuration:

- Device Add-on Profiles (RSLogix 5000 software, version 16.00 or later)
- Classic Profile (RSLogix 5000 software, versions 13.00...15.00)
- Generic Profile (RSLogix 5000 software, all versions)

These are described in separate sections below. If your version of RSLogix 5000 software supports device Add-on Profiles, we recommend that you use this method.

Using RSLogix 5000 Device Add-on Profiles, Version 16.00 or Later

When compared to using the RSLogix 5000 Classic Profile (versions 13.00...15.00) or Generic Profile (all versions), the RSLogix 5000 device Add-on Profiles provide the following advantages:

- Profiles for specific drives that provide descriptive controller tags for basic control I/O words (Logic Command/Status and Reference/Feedback) **and** Datalinks. Additionally, Datalinks automatically take the name of the drive parameter to which they are assigned. These profiles virtually eliminate I/O mismatch errors and substantially reduce drive configuration time.

- New Drive tab eliminates the need for a separate drive software configuration tool.

- Drive configuration settings are saved as part of the RSLogix 5000 software, version 16.00 or later, project file (.ACD) and also downloaded to the controller.

- Unicast connection (RSLogix 5000 software, version 18.00 or later)

- Device Add-on Profiles can be updated anytime. When a new drive is used or to benefit from new updates for Add-on Profiles, you will need the newest Add-on Profile update. Go to www.ab.com/support/abdrives/webupdate to download the latest RSLogix 5000 device Add-on Profile. To determine your device Add-on Profile version, see Allen-Bradley Knowledgebase document #65882.

Add the Drive/Adapter to the I/O Configuration

To transmit data between the bridge and the drive, you must add the drive as a child device to the parent bridge. In this example, RSLogix 5000 software, version 16.00 is used with device Add-on Profile version 4.05 or later.

1. In the treeview, right-click on the bridge and choose **New Module...** to display the Select Module screen.

   In our example, we right-click on the 1756-ENBT/A bridge. Expand the Drives group to display all of the available drives with their communication adapters.

TIP If the PowerFlex drive is not shown, go to www.ab.com/support/abdrives/webupdate and download the latest RSLogix 5000 device Add-on Profile.

2. From the list, select the drive and its connected adapter.

   For this example, we selected 'PowerFlex 70 EC-E'.

3. Click **OK**.

   The drive's New Module screen appears.

4. On the General tab, edit the following data about the drive/adapter.

Box	Setting
Name	A name to identify the drive.
Description	Optional – description of the drive/adapter.
IP Address	The IP address of the adapter.

5. On the New Module screen in the Module Definition section, click **Change...** to launch the Module Definition screen and begin the drive/adapter configuration process.

   In this example, Datalinks are used to do the following.

Read...	Write to...
Output Current (Parameter 3)	Accel Time 1 (Parameter 140)
DC Bus Voltage (Parameter 12)	Decel Time 1 (Parameter 142)
Fault 1 Code (Parameter 243)	High Resolution Reference (Parameter 308)

TIP To get the latest RSLogix 5000 device Add-on Profile, go to www.ab.com/support/abdrives/webupdate.

6. In the Module Definition screen, edit the following information.

Box	Setting
Revision	The major and minor revision of the firmware (database) in the drive. If the drive's major and minor revision is not available, the drive database is not installed on your computer. To get the correct database revision, use one of the following buttons at the bottom left of the Module Definition screen: • **Create Database:** Creates a database from an online network drive. Clicking this button displays an RSLinx software RSWho window. Browse to the online drive (for this example, PowerFlex 70 EC), select it, and click **OK**. The database will be uploaded and stored on the computer. Thereafter, close the Module Definition screen and then re-open it to display the new revision. • **Web Update:** When a drive is not available online, opens the Allen-Bradley Drives Web Updates website to download a specific database file. After downloading the file, close the Module Definition screen and then re-open it to display the new revision. • **Match Drive:** Use this button when the drive being added to the network matches the drive profile (revision, rating, configuration settings, and so forth) of an existing online network drive. Click this button to conveniently create a duplicate drive profile from the online drive, and automatically load this identical information into the Module Definition screen. This eliminates the need to manually enter the information each time a new drive with a matching profile is added to the network.
Electronic Keying	**Compatible Module**. The 'Compatible Module' setting for Electronic Keying ensures that the physical module is consistent with the software configuration before the controller and bridge make a connection. Therefore, be sure that you have set the correct revision in this screen. See the online Help for additional information on this and other Electronic Keying settings. If keying is not required, select 'Disable Keying'. Drives do not require keying, and so 'Disable Keying' is recommended.
Drive Rating	The voltage and current rating of the drive. If the drive rating is not listed, the drive database is not installed on your computer. To get the correct drive rating, use the **Create Database**, **Web Update**, or **Match Drive** button described above.
Connection	**Parameters via Datalinks.** When selecting 'Parameters via Datalinks' (default), the controller tags for the Datalinks use the drive parameter names to which they are assigned. When selecting 'Datalinks', the controller tags for the Datalinks have non-descriptive UserDefinedData[n] names like those used in RSLogix 5000 software, version 15.00.
Data Format	**Parameters.** When the Connection field is set to 'Parameters via Datalinks', 'Parameters' is automatically selected. When the Connection field is set to 'Datalinks', you must select the number of Datalinks required for your application in the 'Data Format' field.
Datalink A, B, C, D	In the Input Data column, assigns selected drive parameters to be READ by the controller. In the Output Data column, assigns selected drive parameters to be WRITTEN by the controller.
Sort Input/ Output selection…	When this box is checked, sorts the Input Data and Output Data assigned parameters by name and then by number, and enables parameter search by name. When unchecked, sorts the assigned parameters by parameter number and then by name, and enables parameter search by number.
Use Network Reference	Conveniently selects the speed reference for the drive to come from the network. This box is checked by default.

When a 32-bit parameter is selected for Input Data or Output Data for a drive with 16-bit Datalinks, two contiguous Datalinks (for example, x1 and x2, where x = A, B, C or D) are automatically assigned as a pair to

represent that parameter. See Datalink examples in the screen shown on the previous page. For more information on Datalinks, see Using Datalinks on page 86.

On the Module Definition screen, notice that the automatically-assigned controller tags DriveStatus, OutputFreq, DriveLogicRslt, and CommandedFreq are always used.

When a Datalink is enabled, the following 20-COMM-ER adapter I/O parameters are automatically set:

- **Parameter 25 - [DPI I/O Cfg]** turns on the enabled Datalink bit so the 20-COMM-ER adapter will communicate that Datalink's information with the drive.
- **Parameter 37 - [M-S Input]** turns on the enabled Datalink bit so the 20-COMM-ER adapter will input that Datalink's information from the controller.
- **Parameter 38 - [M-S Output]** turns on the enabled Datalink bit so the 20-COMM-ER adapter will output that Datalink's information to the controller.

7. Click **OK** on the Module Definition screen to save the drive and adapter configuration and close the screen.

The drive's New Module screen reappears.

8. On the New Module screen, click the Connection tab.

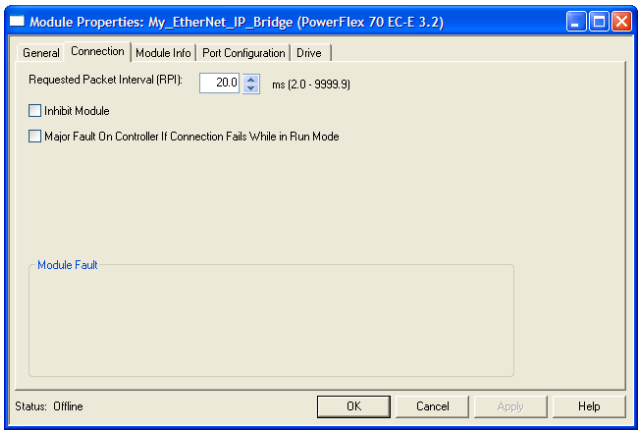

Screen for RSLogix 5000 software, version 16.00 or 17.00

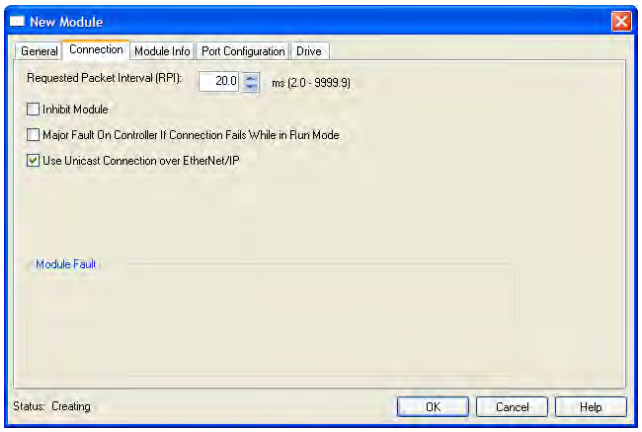

Screen for RSLogix 5000 software, version 18.00 or later

9. In the 'Requested Packet Interval (RPI)' box, set the value to 5.0 milliseconds or greater.

This value determines the maximum interval that a controller should use to move data to and from the adapter. To conserve bandwidth, use higher values for communicating with low priority devices.

The 'Inhibit Module' box, when checked, inhibits the module from communicating with the RSLogix 5000 project. When the 'Major Fault on ...' box is checked, a major controller fault will occur when the module's connection fails while the controller is in the Run Mode. For this example, leave the 'Inhibit Module' and 'Major Fault On ...' boxes unchecked.

Important: Unicast support has been added to RSLogix 5000 software, version 18.00 or later. However, to also support unicast, the controller firmware must be version 18.00 or later. Unicast is recommended whenever possible. For the benefits of unicast operation, see Preparing for an Installation on page 18.

10. On the New Module screen, click the Port Configuration tab.

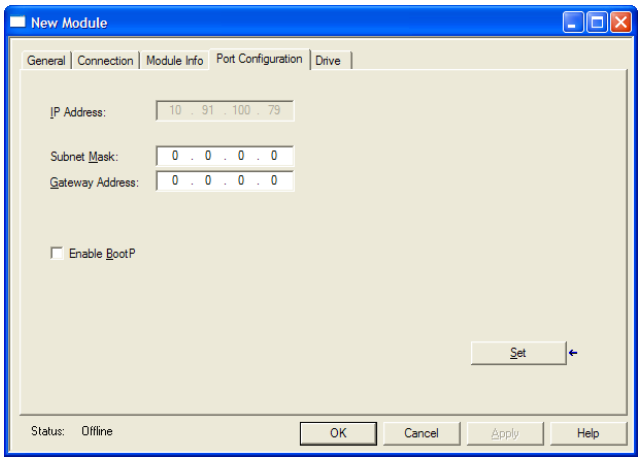

11. In the Port Configuration tab screen, edit the following information.

Box	Setting
IP Address	The IP address of the adapter that was already set in the General tab. This field is not configurable (grayed out).
Subnet Mask	The Subnet Mask configuration setting of the network. This setting must match the setting of other devices on the network (for example, 255.255.255.0).
Gateway Address	The Gateway Address configuration setting of the network. This setting must match the setting of other devices on the network (for example, 10.91.100.1).
Enable BootP	When this box is checked, BOOTP is enabled in the adapter and will ignore the IP address set in the General tab. When unchecked, the controller uses the set IP address. This is another method to enable/disable BOOTP in the adapter. For this example, leave this box unchecked.

12. Click **Set** to save the Port Configuration information which sets the corresponding offline Subnet Cfg x and Gateway Cfg x parameters in the adapter.

13. Click **OK** on the New Module screen.

The new node (‘My_PowerFlex_70_EC_Drive’ in this example) now appears under the bridge (‘My_EtherNet_IP_Bridge’ in this example) in the I/O Configuration folder. If you double-click the Controller Tags, you will see that module-defined data types and tags have been automatically created (Figure 9). Note that all tag names are defined and Datalinks include the assigned drive parameter name. After you save and download the configuration, these tags allow you to access the Input and Output data of the drive via the controller’s ladder logic.

Figure 9 - Controller Tags

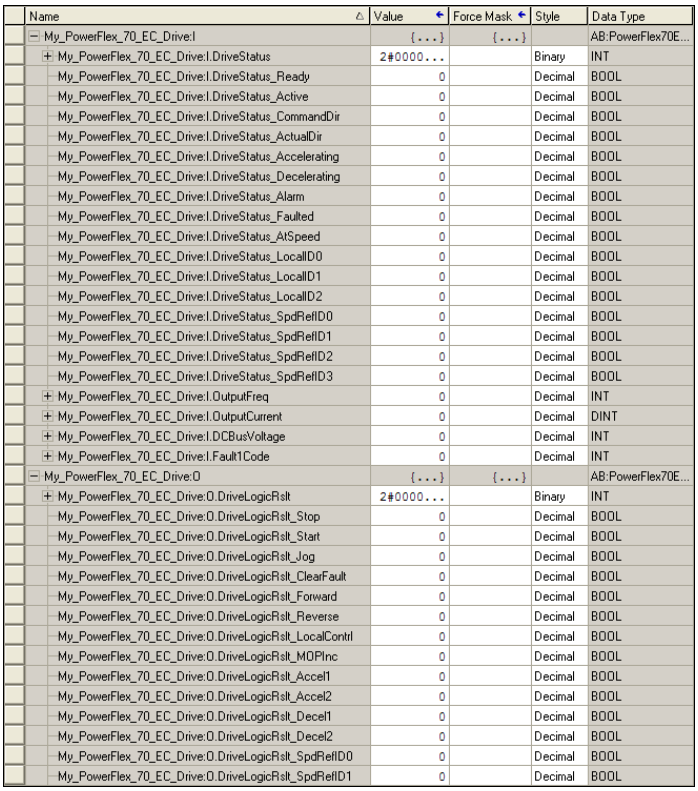

Name	Value	Force Mask	Style	Data Type
My_PowerFlex_70_EC_Drive:I	{...}	{...}		AB:PowerFlex70E...
My_PowerFlex_70_EC_Drive:I.DriveStatus	2#0000...		Binary	INT
My_PowerFlex_70_EC_Drive:I.DriveStatus_Ready	0		Decimal	BOOL
My_PowerFlex_70_EC_Drive:I.DriveStatus_Active	0		Decimal	BOOL
My_PowerFlex_70_EC_Drive:I.DriveStatus_CommandDir	0		Decimal	BOOL
My_PowerFlex_70_EC_Drive:I.DriveStatus_ActualDir	0		Decimal	BOOL
My_PowerFlex_70_EC_Drive:I.DriveStatus_Accelerating	0		Decimal	BOOL
My_PowerFlex_70_EC_Drive:I.DriveStatus_Decelerating	0		Decimal	BOOL
My_PowerFlex_70_EC_Drive:I.DriveStatus_Alarm	0		Decimal	BOOL
My_PowerFlex_70_EC_Drive:I.DriveStatus_Faulted	0		Decimal	BOOL
My_PowerFlex_70_EC_Drive:I.DriveStatus_AtSpeed	0		Decimal	BOOL
My_PowerFlex_70_EC_Drive:I.DriveStatus_LocalID0	0		Decimal	BOOL
My_PowerFlex_70_EC_Drive:I.DriveStatus_LocalID1	0		Decimal	BOOL
My_PowerFlex_70_EC_Drive:I.DriveStatus_LocalID2	0		Decimal	BOOL
My_PowerFlex_70_EC_Drive:I.DriveStatus_SpdRefID0	0		Decimal	BOOL
My_PowerFlex_70_EC_Drive:I.DriveStatus_SpdRefID1	0		Decimal	BOOL
My_PowerFlex_70_EC_Drive:I.DriveStatus_SpdRefID2	0		Decimal	BOOL
My_PowerFlex_70_EC_Drive:I.DriveStatus_SpdRefID3	0		Decimal	BOOL
My_PowerFlex_70_EC_Drive:I.OutputFreq	0		Decimal	INT
My_PowerFlex_70_EC_Drive:I.OutputCurrent	0		Decimal	DINT
My_PowerFlex_70_EC_Drive:I.DCBusVoltage	0		Decimal	INT
My_PowerFlex_70_EC_Drive:I.Fault1Code	0		Decimal	INT
My_PowerFlex_70_EC_Drive:O	{...}	{...}		AB:PowerFlex70E...
My_PowerFlex_70_EC_Drive:O.DriveLogicRslt	2#0000...		Binary	INT
My_PowerFlex_70_EC_Drive:O.DriveLogicRslt_Stop	0		Decimal	BOOL
My_PowerFlex_70_EC_Drive:O.DriveLogicRslt_Start	0		Decimal	BOOL
My_PowerFlex_70_EC_Drive:O.DriveLogicRslt_Jog	0		Decimal	BOOL
My_PowerFlex_70_EC_Drive:O.DriveLogicRslt_ClearFault	0		Decimal	BOOL
My_PowerFlex_70_EC_Drive:O.DriveLogicRslt_Forward	0		Decimal	BOOL
My_PowerFlex_70_EC_Drive:O.DriveLogicRslt_Reverse	0		Decimal	BOOL
My_PowerFlex_70_EC_Drive:O.DriveLogicRslt_LocalContrl	0		Decimal	BOOL
My_PowerFlex_70_EC_Drive:O.DriveLogicRslt_MOPInc	0		Decimal	BOOL
My_PowerFlex_70_EC_Drive:O.DriveLogicRslt_Accel1	0		Decimal	BOOL
My_PowerFlex_70_EC_Drive:O.DriveLogicRslt_Accel2	0		Decimal	BOOL
My_PowerFlex_70_EC_Drive:O.DriveLogicRslt_Decel1	0		Decimal	BOOL
My_PowerFlex_70_EC_Drive:O.DriveLogicRslt_Decel2	0		Decimal	BOOL
My_PowerFlex_70_EC_Drive:O.DriveLogicRslt_SpdRefID0	0		Decimal	BOOL
My_PowerFlex_70_EC_Drive:O.DriveLogicRslt_SpdRefID1	0		Decimal	BOOL

Save the I/O Configuration to the Controller

After adding the bridge and drive/adapter to the I/O configuration, you must download the configuration to the controller. You should also save the configuration to a file on your computer.

1. In the RSLogix 5000 window, select **Communications > Download**.

The Download dialog box appears.

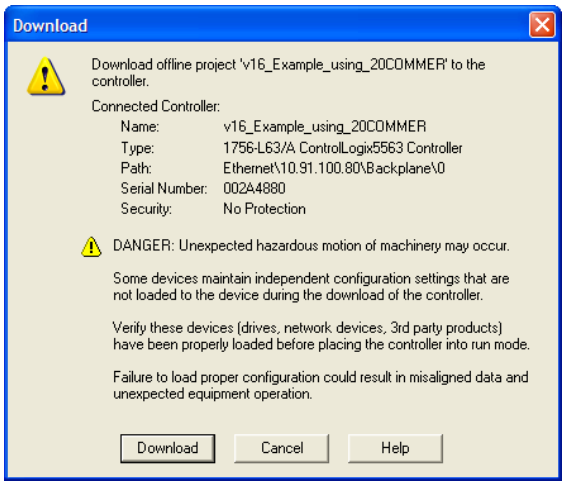

TIP If a message box reports that RSLogix 5000 software is unable to go online, select **Communications > Who Active** to find your controller in the Who Active screen. After finding and selecting the controller, click **Set Project Path** to establish the path. If your controller does not appear, you need to add or configure the EtherNet/IP driver with RSLinx software. See Using RSLinx Classic Software on page 47 and RSLinx online help for details.

2. Click **Download** to download the configuration to the controller.

   When the download is successfully completed, RSLogix 5000 software goes into the Online mode and the I/O Not Responding box in the upper-left of the window should be flashing green. Also, a yellow warning symbol ⚠ should be displayed on the I/O Configuration folder in the treeview and on the drive profile.

   If the controller was in Run Mode before clicking **Download**, RSLogix 5000 software prompts you to change the controller mode back to Remote Run. In this case, choose the appropriate mode for your application. If the controller was in Program Mode before clicking **Download**, this prompt will not appear.

3. Select **File > Save**.

   If this is the first time you saved the project, the Save As dialog box appears.

   a. Navigate to a folder.

   b. Type a file name.

   c. Click **Save** to save the configuration to a file on your computer.

   To be sure that the present project configuration values are saved, RSLogix 5000 software prompts you to upload them. Click **Yes** to upload and save the values.

Correlate the Drive with the Controller

You must now correlate the drive settings to the RSLogix 5000 project I/O settings so that they match. This requires loading the project I/O settings into the drive.

1. In the treeview under I/O Configuration, right-click on the drive profile (for this example, My_PowerFlex_70_EC_Drive) and choose **Properties**.

2. Click the Drive tab.

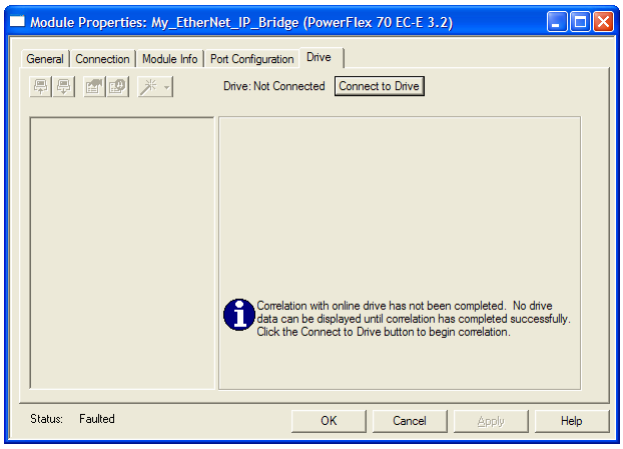

3. Click **Connect to Drive** to begin the correlation process.

   After the drive configuration data has been verified, a pop-up dialog box appears, which synchronizes ports from the online drive to the project to be sure that correct Datalinks are assigned.

4. Click OK.

   If the Differences Found screen appears—which is typical, click **Download**. This will download the project settings from the controller to the drive and its connected adapter. If **Upload** is clicked, the drive and adapter settings are uploaded to the controller.

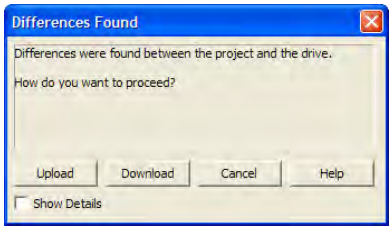

TIP On subsequent connections to the drive (after initial download), click **Upload**.

5. When the Reset Comm Module screen appears, click **Yes** to reset the communication adapter so that the new I/O settings take effect.

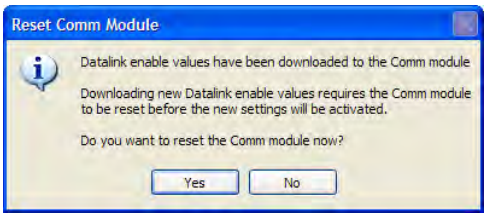

   After resetting the communication module, which may take up to a minute to complete, the I/O OK box in the upper-left of the RSLogix 5000 window should now be steady green and the yellow warning symbols ⚠ in

the treeview under the I/O Configuration folder and drive profile should be gone.

TIP If the yellow warning symbol ⚠ for your drive remains displayed, first try power cycling the drive. Otherwise, double-click the drive under the I/O tree and click the Connection tab to find the cause of the problem.

6. The Module Properties Drive Tab screen re-appears.

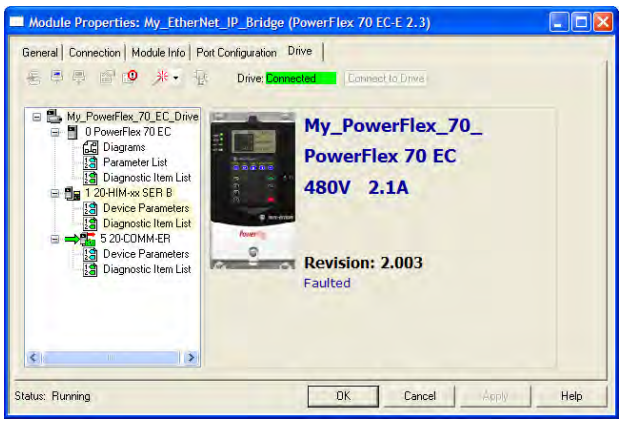

You can view the drive's Parameter List, Diagnostic Items List, and lists for any connected peripheral, including the 20-COMM-ER. While connected to the drive, you can dynamically change values of parameters. Diagnostic items and diagram views can be used for troubleshooting. Table 24 on page 147 provides diagnostic items for troubleshooting the adapter.

7. Click **OK** when finished to close the Module Properties screen for the drive.

Using the RSLogix 5000 Classic Profile, Versions 13.00…15.00

When compared to using the RSLogix 5000 Generic Profile (all versions), the RSLogix 5000 Classic Profile provides these advantages:

- Profiles for specific drives (Figure 10) that provide descriptive controller tags for basic control I/O words (Logic Command/Status and Reference/Feedback). The controller tags for Datalinks, however, have non-descriptive UserDefinedData[n] names.

- Improved I/O configuration—no I/O assembly configuration required. Basic control I/O is defined, but Datalinks still need to be configured/mapped.

- The Setup tab includes a DriveExecutive icon link to conveniently launch DriveExecutive software (when installed on computer) to match the adapter I/O configuration with the controller, and to assign the Datalink parameters in the drive. This reduces I/O mismatches.

TIP Since the RSLogix 5000 Classic Profile has been significantly improved upon by RSLogix 5000 Device Add-on Profiles, version 16.00 or later, we recommend using RSLogix 5000 Device Add-on Profiles to take advantage of its benefits (more intuitive, time saving, and less likely to make I/O configuration errors).

Figure 10 - Classic Profile Screens for Drives

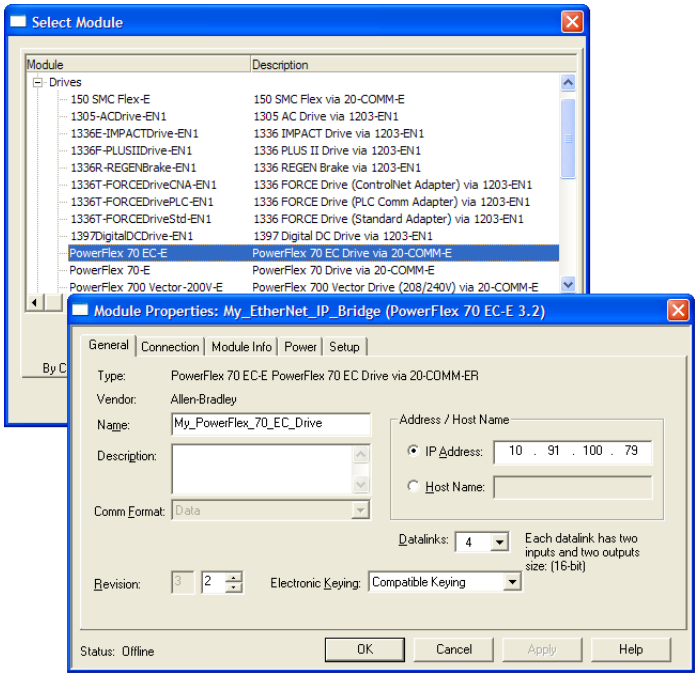

When Datalinks are used, you must enable the desired Datalinks and assign names to their non-descriptive controller tags. When a Datalink is enabled, you must set the following adapter I/O parameters:

- **Parameter 25 - [DPI I/O Cfg]** turns on the enabled Datalink bit so the 20-COMM-ER adapter will communicate that Datalink's information with the drive.

- **Parameter 37 - [M-S Input]** turns on the enabled Datalink bit so the 20-COMM-ER adapter will input that Datalink's information from the controller.

- **Parameter 38 - [M-S Output]** turns on the enabled Datalink bit so the 20-COMM-ER adapter will output that Datalink's information to the controller.

When using Datalinks, up to 8 [Data In xx] parameters and/or up to 8 [Data Out xx] parameters must be assigned to point to the appropriate drive parameters for your application.

Using the RSLogix 5000 Generic Profile, All Versions

We recommend that you use the basic RSLogix 5000 Generic Profile for only the following reasons:

- A specific drive profile in other versions of RSLogix 5000 software is unavailable.
- Users are already familiar with a drive Generic Profile and do not want to convert an existing project to a Classic Profile, versions 13.00...15.00, or to a device Add-on Profile (RSLogix 5000 software, version 16.00 or later).
- A project must maintain specific revision level control.
- The controller cannot be taken offline. RSlogix 5000 software, version 16.00 or later, enables the drive Generic Profile to be added while the controller is online and in the Run mode.

Add the Drive/Adapter to the I/O Configuration

To transmit data between the bridge and the drive, you must add the drive as a child device to the parent bridge.

1. In the treeview, right-click the bridge and select **New Module...** to display the Select Module screen.

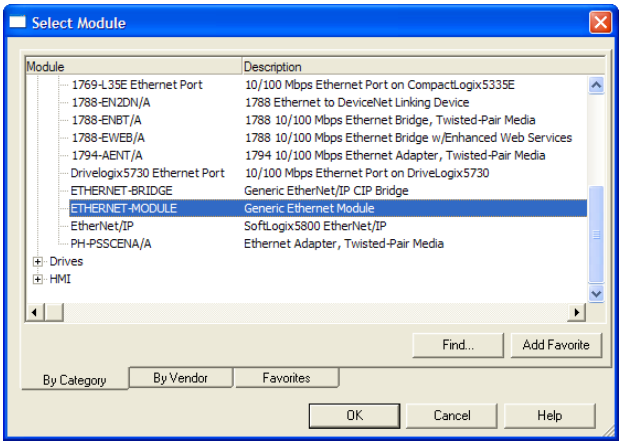

In our example, we right-click on the 1756-ENBT/A bridge.

2. Expand the Communications group to display all of the available communication modules.

3. Select "ETHERNET-MODULE" from the list to configure the drive and its connected 20-COMM-ER adapter.
4. Click **OK**.

The drive's New Module screen appears.

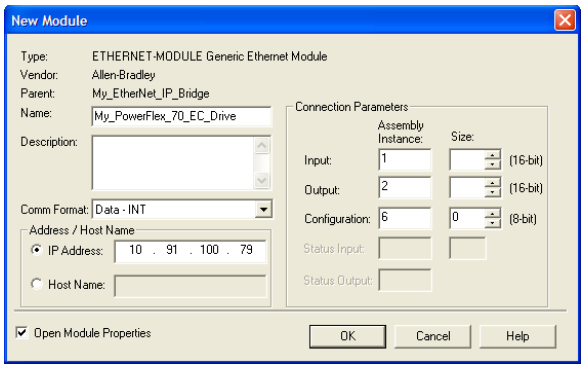

5. Edit the following information about the drive and adapter.

Box	Setting
Name	A name to identify the drive and adapter.
Description	Optional – description of the drive/adapter.
Comm Format	**Data - INT** (This setting formats the data in 16-bit words.)
IP Address	The IP address of the adapter.
Open Module Properties	When this box is checked, clicking **OK** opens additional module properties screens to further configure the drive/adapter. When unchecked, clicking **OK** closes the drive's New Module screen. For this example, check this box.

6. Under Connection Parameters, edit the following information.

Box	Assembly Instance	Size
Input	**1** (This value is required.)	The value will vary based on your application (setting of **Parameters 25 - [DPI I/O Cfg]** and **38 - [M-S Output]**) and the size (16-bit or 32-bit) of the Reference/Feedback and Datalinks in the drive. See Table 2, Table 3, or Table 4 on page 64.
Output	**2** (This value is required.)	The value will vary based on your application (setting of **Parameters 25 - [DPI I/O Cfg]** and **37 - [M-S Input]**) and the size (16-bit or 32-bit) of the Reference/Feedback and Datalinks in the drive. See Table 2, Table 3, or Table 4 on page 64.
Configuration	**6** (This value is required.)	**0** (This value is required.)

The following tables define the number of 16-bit words that you need to enter for the Input Size and Output Size boxes depending on your configuration.

Table 2 - Devices with 16-bit Reference/Feedback and 16-bit Datalinks

These products include the following:

- PowerFlex 70 drives with standard or enhanced control
- PowerFlex 700 drives with standard control
- PowerFlex 700H drives
- SMC Flex smart motor controllers
- SMC-50 smart motor controllers

Logic Command/ Status	Ref/Fdbk (16-bit)	Datalinks (16-bit)				User Configured Settings				
		A	B	C	D	Size in Words		Par. 23 - [DPI I/O Cfg]	Par. 35 - [M-S Input]	Par. 36 - [M-S Output]
						Input	Output			
✔	✔					4	2	...0 0001	...0 0001	...0 0001
✔	✔	✔				6	4	...0 0011	...0 0011	...0 0011
✔	✔	✔	✔			8	6	...0 0111	...0 0111	...0 0111
✔	✔	✔	✔	✔		10	8	...0 1111	...0 1111	...0 1111
✔	✔	✔	✔	✔	✔	12	10	...1 1111	...1 1111	...1 1111

Table 3 - Devices with 16-bit Reference/Feedback and 32-bit Datalinks

These products include the following:

- PowerFlex 700 drives with vector control
- PowerFlex 700L drives with 700 control
- PowerFlex Digital DC drives
- SMC Controllers

Logic Command/ Status	Ref/Fdbk (16-bit)	Datalinks (32-bit)				User Configured Settings				
		A	B	C	D	Size in Words		Par. 23 - [DPI I/O Cfg]	Par. 35 - [M-S Input]	Par. 36 - [M-S Output]
						Input	Output			
✔	✔					4	2	...0 0001	...0 0001	...0 0001
✔	✔	✔				8	6	...0 0011	...0 0011	...0 0011
✔	✔	✔	✔			12	10	...0 0111	...0 0111	...0 0111
✔	✔	✔	✔	✔		16	14	...0 1111	...0 1111	...0 1111
✔	✔	✔	✔	✔	✔	20	18	...1 1111	...1 1111	...1 1111

Table 4 - Drives with 32-bit Reference/Feedback and 32-bit Datalinks

These products include the following:

- PowerFlex 700S drives with Phase I or Phase II control
- PowerFlex 700L drives with 700S control
- PowerFlex 753 drives
- PowerFlex 755 drives

Logic Command/ Status	Ref/Fdbk (32-bit)	Datalinks (32-bit)				User Configured Settings				
		A	B	C	D	Size in Words		Par. 23 - [DPI I/O Cfg]	Par. 35 - [M-S Input]	Par. 36 - [M-S Output]
						Input	Output			
✔	✔					6	4	...0 0001	...0 0001	...0 0001
✔	✔	✔				10	8	...0 0011	...0 0011	...0 0011
✔	✔	✔	✔			14	12	...0 0111	...0 0111	...0 0111
✔	✔	✔	✔	✔		18	16	...0 1111	...0 1111	...0 1111
✔	✔	✔	✔	✔	✔	22	20	...1 1111	...1 1111	...1 1111

TIP For instructions on configuring the I/O for the adapter using **Parameter 25 - [DPI I/O Cfg]** and its Master-Slave Hierarchy using **Parameters 37 - [M-S Input]** and **38 - [M-S Output]**, see Setting the I/O Configuration on page 35.

When using Datalinks, up to 8 [Data In xx] parameters and/or up to 8 [Data Out xx] parameters must be assigned to point to the appropriate device parameters for your application.

7. After setting the information in the device's New Module screen, click **OK**.

The Module Properties screen appears.

8. Click the Connection tab.

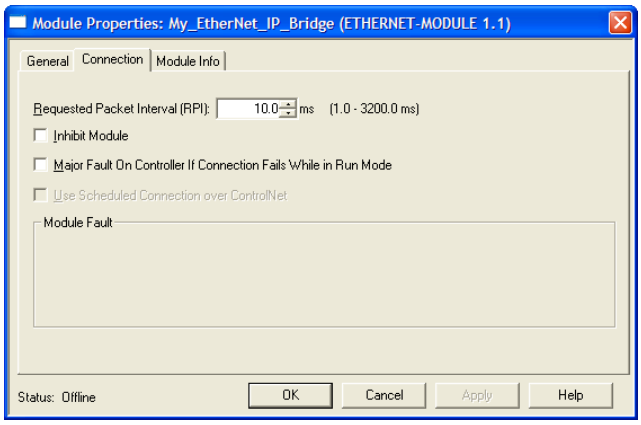

9. In the 'Requested Packet Interval (RPI)' box, set the value to 5.0 ms or greater.

This value determines the maximum interval that a controller should use to move data to and from the adapter. To conserve bandwidth, use higher values for communicating with low priority devices. For this example, leave the 'Inhibit Module' and 'Major Fault …' boxes unchecked.

10. Click **OK**.

The new node ('My_PowerFlex_70_EC_Drive' in this example) now appears under the bridge ('My_EtherNet_IP_Bridge' in this example) in the I/O Configuration folder. If you double-click the Controller Tags, you will see that module-defined data types and tags have been automatically created (Figure 11). After you save and download the configuration, these tags allow you to access the Input and Output data of the drive via the controller's ladder logic.

For this example, all Datalinks (A, B, C, and D) are enabled. The Input Size is set to 12 words and the Output Size is set to 10 words. Also, the following adapter I/O parameters are set to the following values.

Adapter Parameter No.	Setting
25 - [DPI I/O Cfg]	xxxx xxxx xxx1 1111
37 - [M-S Input]	xxxx xxxx xxx1 1111
38 - [M-S Output]	xxxx xxxx xxx1 1111

11. Reset the adapter (see Resetting the Adapter on page 43) or power cycle the device.

For the device speed reference and Datalink parameter values and the adapter setup parameter values, see Drive and Adapter Parameter Settings on page 90.

Figure 11 - Controller Tags

Name	Value	Force Mask	Style	Data Type
+ My_PowerFlex_70_EC_Drive:C	{...}	{...}		AB:ETHERNET_...
− My_PowerFlex_70_EC_Drive:I	{...}	{...}		AB:ETHERNET_...
− My_PowerFlex_70_EC_Drive:I.Data	{...}	{...}	Decimal	INT[12]
+ My_PowerFlex_70_EC_Drive:I.Data[0]	0		Decimal	INT
+ My_PowerFlex_70_EC_Drive:I.Data[1]	0		Decimal	INT
+ My_PowerFlex_70_EC_Drive:I.Data[2]	0		Decimal	INT
+ My_PowerFlex_70_EC_Drive:I.Data[3]	0		Decimal	INT
+ My_PowerFlex_70_EC_Drive:I.Data[4]	0		Decimal	INT
+ My_PowerFlex_70_EC_Drive:I.Data[5]	0		Decimal	INT
+ My_PowerFlex_70_EC_Drive:I.Data[6]	0		Decimal	INT
+ My_PowerFlex_70_EC_Drive:I.Data[7]	0		Decimal	INT
+ My_PowerFlex_70_EC_Drive:I.Data[8]	0		Decimal	INT
+ My_PowerFlex_70_EC_Drive:I.Data[9]	0		Decimal	INT
+ My_PowerFlex_70_EC_Drive:I.Data[10]	0		Decimal	INT
+ My_PowerFlex_70_EC_Drive:I.Data[11]	0		Decimal	INT
− My_PowerFlex_70_EC_Drive:O	{...}	{...}		AB:ETHERNET_...
− My_PowerFlex_70_EC_Drive:O.Data	{...}	{...}	Decimal	INT[10]
+ My_PowerFlex_70_EC_Drive:O.Data[0]	0		Decimal	INT
+ My_PowerFlex_70_EC_Drive:O.Data[1]	0		Decimal	INT
+ My_PowerFlex_70_EC_Drive:O.Data[2]	0		Decimal	INT
+ My_PowerFlex_70_EC_Drive:O.Data[3]	0		Decimal	INT
+ My_PowerFlex_70_EC_Drive:O.Data[4]	0		Decimal	INT
+ My_PowerFlex_70_EC_Drive:O.Data[5]	0		Decimal	INT
+ My_PowerFlex_70_EC_Drive:O.Data[6]	0		Decimal	INT
+ My_PowerFlex_70_EC_Drive:O.Data[7]	0		Decimal	INT
+ My_PowerFlex_70_EC_Drive:O.Data[8]	0		Decimal	INT
+ My_PowerFlex_70_EC_Drive:O.Data[9]	0		Decimal	INT

Save the I/O Configuration to the Controller

After adding the bridge and drive/adapter to the I/O configuration, you must download the configuration to the controller. You should also save the configuration to a file on your computer.

TIP When using RSLogix 5000 software, version 16.00 or later, you can add the I/O configuration of a Generic Profile while the controller is online and in the Run mode.

1. In the RSLogix 5000 window, select **Communications > Download**.

The Download dialog box appears.

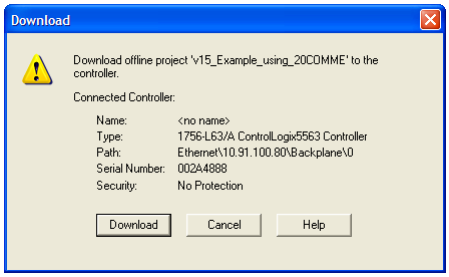

TIP If a message box reports that RSLogix 5000 software is unable to go online, select **Communications > Who Active** to find your controller in the Who Active screen. After finding and selecting the controller, click **Set Project Path** to establish the path. If your controller does not appear, you need to add or configure the EtherNet/IP driver with RSLinx software. See Using RSLinx Classic Software on page 47 and RSLinx online help for details.

2. Click **Download** to download the configuration to the controller.

   When the download is successfully completed, RSLogix 5000 software goes into the Online mode and the I/O OK box in the upper-left of the screen should be steady green.

3. Select **File > Save**.

   If this is the first time you saved the project, the Save As dialog box appears. Navigate to a folder, type a file name, and click **Save** to save the configuration to a file on your computer.

   To be sure that the present project configuration values are saved, RSLogix 5000 software prompts you to upload them. Click **Yes** to upload and save the values.

4. Configure any Datalinks in the drive (for example, Datalink parameters 300...317 in PowerFlex 70 drives) that were enabled in the controller and adapter during I/O configuration (Table 2, Table 3, or Table 4).

   Each Datalink being used must be assigned to a specific parameter in the drive or connected peripheral. If this is not done, the controller will receive or send placeholder data instead of actual drive or peripheral parameter values.

5. Place the controller in Remote Run or Run Mode.

Limitations Using a MicroLogix 1100/1400 Controller

Controlling I/O with explicit messages is relatively complex compared to normal implicit I/O control.

ControlLogix and CompactLogix controllers with EtherNet/IP provide the easiest and most integrated form of implicit I/O control for a device. RSLogix 5000 software, version 16.00 or later, for ControlLogix and CompactLogix controllers contains integrated profiles for PowerFlex drives that, with a few clicks of the mouse, automatically create all controller tags and an implicit connection at the specified Requested Packet Interval to control the drive. This connection is monitored at both ends to verify that the controller and drive are communicating. A watchdog will cause a drive fault if the drive does not respond within approximately 100 milliseconds. Therefore, using a ControlLogix or CompactLogix controller is by far the much preferred method of controlling drives on EtherNet/IP.

If you are not using either of these type of controllers, then devices on EtherNet/IP can be controlled with explicit messages using MicroLogix 1100/1400 controllers with the following limitations:

- An explicit message is a much slower form of control and is non-deterministic. This means that you cannot guarantee how long the device will take to start up or stop when the command is given. Therefore, all equipment used in this manner should be subject to a risk assessment, taking into account the mechanical and electrical implementation.
- A timeout value (in seconds) in the EtherNet/IP adapter will issue a device fault if a message is not received from the controller within the specified time. However, the controller has no way of detecting a loss of communication to the device until the next cycle of explicit messages. This is another factor in the risk assessment.
- Any additional devices to be controlled will require additional explicit messages for their control, and they need to be carefully sequenced. Most controllers have small communication queues (see the User Manual), which need to be carefully managed if messages are not to be lost.
- Each controller has a limited number of communication connections (see its User Manual for maximum connections), which will limit the number of drives that can be connected.

In summary, unlike a ControlLogix or CompactLogix controller, programming a MicroLogix 1100/1400 controller by using RSLogix 500 software with explicit messages is more difficult, and produces a more complex program.

MicroLogix 1100/1400 Controller Example

After the adapter is configured, the connected drive and adapter will be a single node on the network. This section provides the steps needed to configure a simple EtherNet/IP network (see Figure 12). In our example, we will configure a MicroLogix 1100 controller to communicate with a drive using Logic Command/Status, Reference/Feedback, and Datalinks over the network.

Figure 12 - Example MicroLogix 1100/1400 Controller EtherNet/IP Network

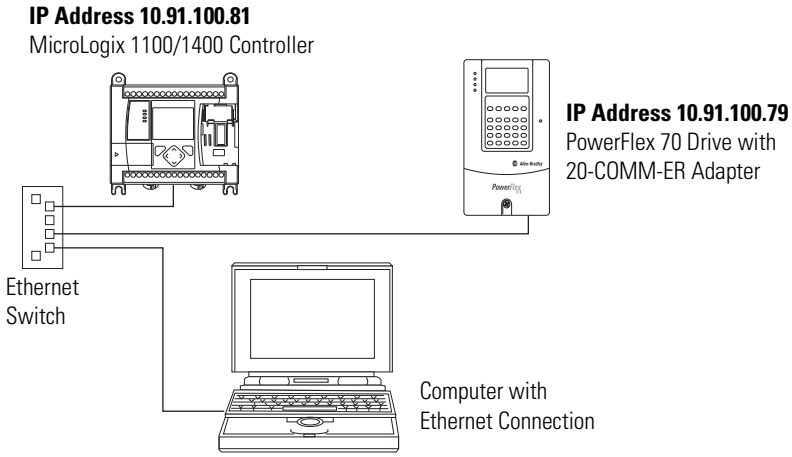

TIP Information for PowerFlex 750-Series drives has been added where applicable.

Configuring Parameters for Network I/O

Because the I/O for the drive is message-based, there is no need to configure any I/O inside the RSLogix 500 project, version 7.00 or later, until using the I/O as described in Chapter 5.

However, to get the adapter to operate with the I/O created in Chapter 5, we need to configure the adapter to accept the I/O and drive to point to the appropriate Datalinks.

1. For this example, the following adapter I/O parameters are set to the following values.

Adapter Parameter No.	Setting
25 - [DPI I/O Cfg]	xxxx xxxx xxx1 1111
37 - [M-S Input]	xxxx xxxx xxx1 1111
38 - [M-S Output]	xxxx xxxx xxx1 1111

2. Reset the adapter (see Resetting the Adapter on page 43) or power cycle the drive.

For the drive speed reference and Datalink parameter values and the adapter setup parameter values, refer to Drive and Adapter Parameter Settings on page 96.

Creating RSLogix 500 Project, Version 7.00 or Later

To transmit (read and write) data between the controller and drive, you must create message instructions that allocate data table addresses in the controller for Logic Command/Status, Reference/Feedback, and Datalinks.

Select the Controller

1. Start RSLogix 500 software.

   The RSLogix 500 window appears.

2. Select **File > New** to display the Select Processor Type screen.

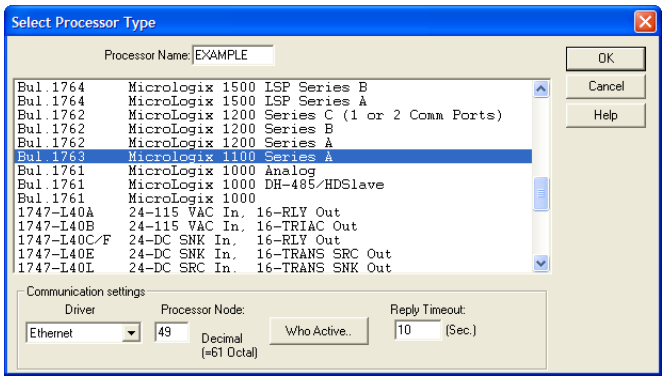

3. Assign a name for the processor.
4. In the list, select the MicroLogix 1100.
5. Choose the appropriate choices for the fields in the screen to match your application.
6. Click **OK**.

   The RSLogix 500 project window appears.

Create MicroLogix 1100/1400 Ladder Logic for the Control Timeout

1. In the RSLogix 500 project window treeview under Program Files double-click on LAD 2.
2. Insert a ladder rung.
3. Double-click on the rung to display the rung editor.
4. Enter **MSG MGxx:n**, where:

   xx is an unused data file number (for example, MG10:n), and
   n is an unused element of the data file chosen for xx (for example, MG10:0)
5. Press **Enter**.
6. Insert another separate rung.
7. Double-click on the rung to display the rung editor.
8. Enter **BST XIC MGxx:n/DN NXB XIC MGxx:n/ER BND OTU MGxx:n/EN**, where:

   xx and n must correspond to the assigned data file number and element (for example, MG10:0) for the message created in steps 2…5.

Important: The information must be entered with appropriate numbers for ‘xx’ and ‘n’ for your application, and with spaces and forward slashes exactly as shown.

9. Press **Enter**.
10. In the MSG instruction (Figure 13), double-click Setup Screen to launch the message configuration screen (Figure 14).

Figure 13 - MicroLogix 1100/1400 Ladder Logic for the Control Timeout

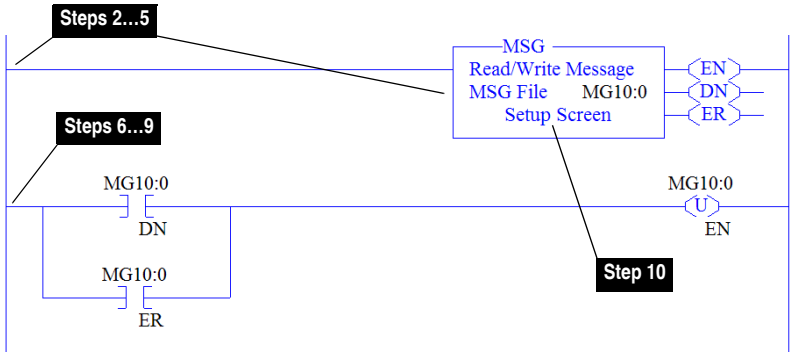

11. Configure the General tab fields by entering or verifying the information shown in the message configuration screen.

Figure 14 - MicroLogix 1100/1400 Message Configuration Screens for the Control Timeout

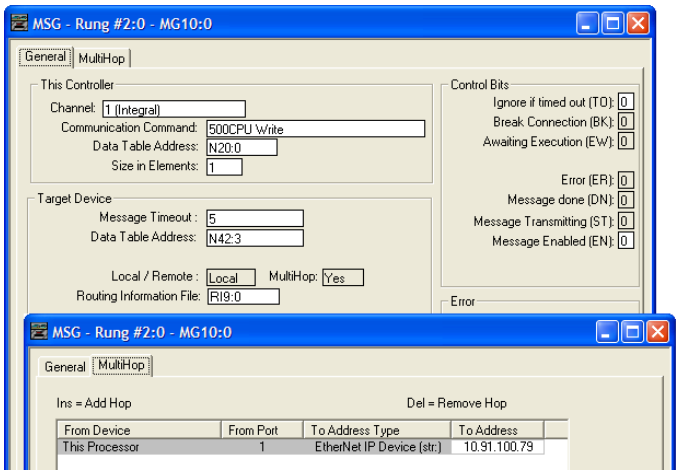

General Tab Box	Setting
This Controller (data for MicroLogix 1100)	
Channel	**1 (integral)**. Controller port to which the network is connected.
Communication Command	**500CPU Write**. The controller type and command type for the controller to read or write data. Because the MicroLogix 1100 is part of the SLC-500 controller family, the '500CPU' controller type was selected. The 'Write' command type was selected to write the control timeout value to the drive.
Data Table Address (1)	**N20:0**. An unused controller data table address containing the control timeout value to be written.
Size in Elements (2)	**1**. Number of elements (words) to be transferred. Each element size is a 16-bit integer.
Target Device (data for adapter/drive)	
Message Timeout	**5**. Message timeout duration in seconds.
Data Table Address (3)	**N42:3**. Specific starting address of the destination file in the drive.
Routing Information File	**RI9:0**. An unused routing information file for the controller.
MultiHop Tab Box	**Setting**
To Address	**10.91.100.79.** The IP address of the adapter connected to the drive.

(1) For details on data table addresses for this example project, see Table 11…Table 14 starting on page 98.

(2) For details to determine element size for a specific drive, see Understanding Controller Data Table Addresses on page 97.

(3) For details on setting the control timeout value and its function, see N-Files on page 192. The Control Timeout (N42:3) is stored in RAM. If the 20-COMM-ER adapter is power cycled, the Control Timeout Message must be re-sent. If the Control Timeout is not changed from a non-zero value, the control message (page 75) will error out.

TIP The Control Timeout (N42:3) must be changed to a non-zero value (5…20 seconds recommended). If the Control Timeout is not changed from a non-zero value, the control message (page 75) will error out. The Control Timeout is stored in RAM. If the adapter is power cycled, the Control Timeout Message must be re-sent.

Create MicroLogix 1100/1400 Ladder Logic for the Logic Status, Feedback, and Datalink Out

1. Insert another separate rung.
2. Double-click on the rung to display the rung editor.
3. Enter **MSG MGxx:n**, where:

   xx is an unused data file number (for example, MG11:n), and
   n is an unused element of the data file chosen for xx (for example, MG11:0)
4. Press **Enter**.
5. Insert another separate rung.
6. Double-click on the rung to display the rung editor.
7. Enter **BST XIC MGxx:n/DN NXB XIC MGxx:n/ER BND OTU MGxx:n/EN**, where:

   xx and n must correspond to the assigned data file number and element (for example, MG11:0) for the message created in steps 1…4.

Important: The information must be entered with appropriate numbers for ‘xx’ and ‘n’ for your application, and with spaces and forward slashes exactly as shown.

8. Press **Enter**.
9. In the MSG instruction (Figure 15), double-click Setup Screen to launch the message configuration screen (Figure 16).

Figure 15 - MicroLogix 1100/1400 Ladder Logic for the Logic Status, Feedback, and Datalink Out

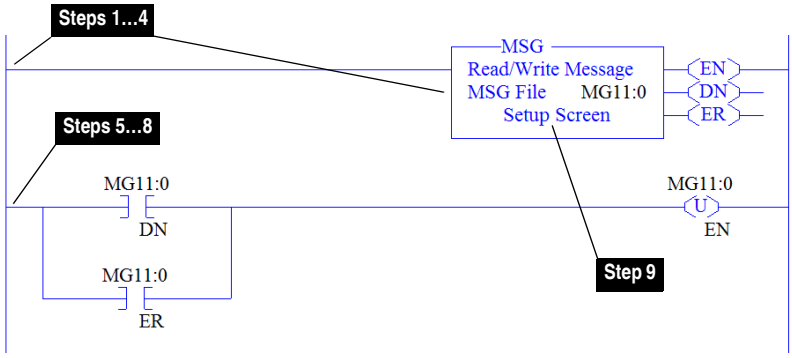

10. Configure the General tab fields by entering or verifying the information shown in the message configuration screen.

Figure 16 - MicroLogix 1100/1400 Message Configuration Screens for the Logic Status, Feedback, and Datalink Out

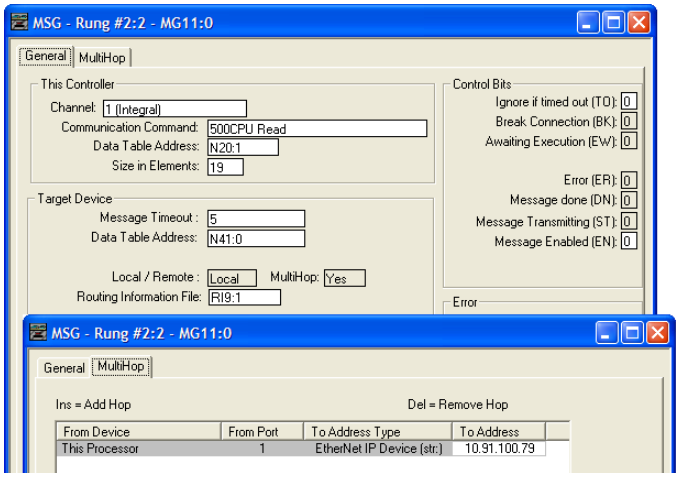

General Tab Box	Setting
This Controller (data for MicroLogix 1100)	
Channel	**1 (integral)**. Controller port to which the network is connected.
Communication Command	**500CPU Read**. The controller type and command type for the controller to read or write data. Because the MicroLogix 1100 is part of the SLC-500 controller family, the '500CPU' controller type was selected. The 'Read' command type was selected to read data from the drive.
Data Table Address (1)	**N20:1**. An unused controller data table address containing the data to be read from the drive.
Size in Elements (2)	**19**. Number of elements (words) to be transferred. Each element size is a 16-bit integer.
Target Device (data for adapter/drive)	
Message Timeout	**5**. Message timeout duration in seconds.
Data Table Address (3)	**N41:0**. Specific starting address of the source file in the drive.
Routing Information File	**RI9:1**. An unused routing information file for the controller.
MultiHop Tab Box	**Setting**
To Address	**10.91.100.79.** The IP address of the adapter connected to the drive.

(1) For details on data table addresses for this example project, see Table 11…Table 14 starting on page 98.

(2) For details to determine element size for a specific drive, see Understanding Controller Data Table Addresses on page 97.

(3) For N-File details, see N-Files on page 192.

Create MicroLogix 1100/1400 Ladder Logic for the Logic Command, Reference, and Datalink In

1. Insert another separate rung.
2. Double-click on the rung to display the rung editor.
3. Enter **MSG MGxx:n**, where:

   xx is an unused data file number (for example, MG12:n), and
   n is an unused element of the data file chosen for xx (for example, MG12:0)
4. Press **Enter**.
5. Insert another separate rung.
6. Double-click on the rung to display the rung editor.
7. Enter **BST XIC MGxx:n/DN NXB XIC MGxx:n/ER BND OTU MGxx:n/EN**, where:

   xx and n must correspond to the assigned data file number and element (for example, MG12:0) for the message created in steps 1…4.

Important: The information must be entered with appropriate numbers for ‘xx’ and ‘n’ for your application, and with spaces and forward slashes exactly as shown.

8. Press **Enter**.
9. In the MSG instruction (Figure 17), double-click Setup Screen to launch the message configuration screen (Figure 18).

Figure 17 - MicroLogix 1100/1400 Ladder Logic for the Logic Command, Reference, and Datalink In

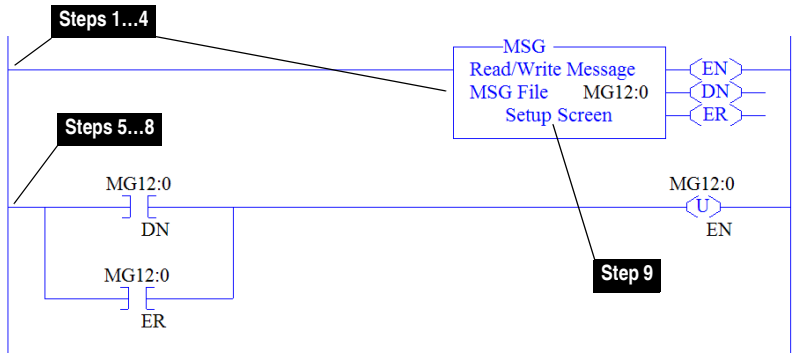

10. Configure the General tab fields by entering or verifying the information shown in the message configuration screen.

Figure 18 - MicroLogix 1100/1400 Message Configuration Screens for the Logic Command, Reference, and Datalink In

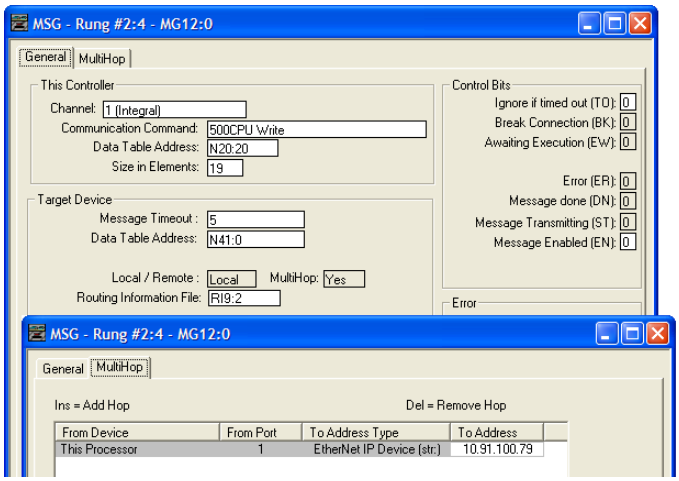

General Tab Box	Setting
This Controller (data for MicroLogix 1100)	
Channel	**1 (integral)**. Controller port to which the network is connected.
Communication Command	**500CPU Write**. The controller type and command type for the controller to read or write data. Because the MicroLogix 1100 is part of the SLC-500 controller family, the '500CPU' controller type was selected. The 'Write' command type was selected to write data to the drive.
Data Table Address (1)	**N20:20**. An unused controller data table address containing the data to be written to the drive.
Size in Elements (2)	**19**. Number of elements (words) to be transferred. Each element size is a 16-bit integer.
Target Device (data for adapter/drive)	
Message Timeout	**5**. Message timeout duration in seconds.
Data Table Address (3)	**N41:0**. Specific starting address of the destination file in the drive.
Routing Information File	**RI9:2**. An unused routing information file for the controller.
MultiHop Tab Box	**Setting**
To Address	**10.91.100.79.** The IP address of the adapter connected to the drive.

(1) For details on data table addresses for this example project, see Table 11…Table 14 starting on page 98.

(2) For details to determine element size for a specific drive, see Understanding Controller Data Table Addresses on page 97.

(3) For N-File details, see N-Files on page 192.

TIP This message will error out if the Control Timeout value is not changed from a non-zero value. Refer to page 71 for writing a value to the Control Timeout.

TIP If the controller is controlling more than one drive, it is recommended to intersperse the control I/O messaging for each drive to conserve network bandwidth and decrease response time. That is, sequence the message instructions for each drive so that its group of messages will occur at a different time than those for another drive.

Notes:

Using the I/O

This chapter provides information and examples that explain how to control, configure, and monitor a PowerFlex 7-Class drive or SMC using the configured I/O.

Topic	Page
About I/O Messaging	79
Understanding the I/O Image	80
Using Logic Command/Status	84
Using Reference/Feedback	84
Using Datalinks	86
Example Ladder Logic Program Information	87
ControlLogix Controller Example	88

ATTENTION: Risk of injury or equipment damage exists. The examples in this publication are intended solely for purposes of example. There are many variables and requirements with any application. Rockwell Automation, Inc. does not assume responsibility or liability (to include intellectual property liability) for actual use of the examples shown in this publication.

About I/O Messaging

On CIP-based networks, including EtherNet/IP, I/O connections are used to transfer the data which controls the PowerFlex drive or SMC and sets its Reference. I/O can also be used to transfer data to and from Datalinks.

The adapter provides many options for configuring and using I/O, including the following:

- Configuring the size of I/O by enabling or disabling the Logic Command/Reference and Datalinks.
- Setting a Master-Slave or Peer-to-Peer hierarchy.

Chapter 3, Configuring the Adapter, and Chapter 4, Configuring the I/O, discuss how to configure the adapter and controller on the network for these options. The defines the different options. This chapter discusses how to use I/O after you have configured the adapter and controller.

Understanding the I/O Image

The terms 'input' and 'output' are defined from the controller's point of view. Therefore, output I/O is data that is produced by the controller and consumed by the adapter. Input I/O is status data that is produced by the adapter and consumed as input by the controller. The I/O image will vary based on the following:

- Size (either 16-bit or 32-bit) of the Reference/Feedback words and Datalink words used by the device. To determine the size of the Reference/Feedback and Datalinks, view adapter **Parameters 20 - [Ref/Fdbk Size]** and **21- [Datalink Size]**. For information to access parameters, see Using the PowerFlex 7-Class HIM on page 28.

- Configuration of I/O (**Parameter 25 - [DPI I/O Cfg]**). If all I/O is not enabled, the image is truncated. The image always uses consecutive words starting at word 0.

- **ControlLogix/CompactLogix Controllers only**—The drive profile used in RSLogix 5000 software (device Add-on Profile in version 16.00 or later, Classic Profile in versions 13.00...15.00, or Generic Profile in all versions).

ControlLogix Controller Image

Since the device Add-on Profile in RSLogix 5000 software, version 16.00 or later, and the Classic Profile, versions 13.00...15.00, provide descriptive controller tags, the I/O image (tag size and location) is automatically configured based on the device being used. When using the Generic Profile (page 62) in RSLogix 5000 software, however, controller tags are not descriptive or defined.

The ControlLogix controller I/O image changes depending on the size of the device's Reference/Feedback and Datalinks. Table , Table , and Table show the I/O image when using various PowerFlex 7-Class drives, and all Datalinks enabled.

Table 5 - ControlLogix Controller I/O Image for Devices with 16-bit Reference/ Feedback and 16-bit Datalinks – Using Generic Profile

These products include the following:

- PowerFlex 70 drives with standard or enhanced control
- PowerFlex 700 drives with standard control
- PowerFlex 700H drives
- SMC Flex smart motor controllers
- SMC-50 smart motor controllers

Word	Output I/O
0	Logic Command
1	Reference
2	Datalink In A1
3	Datalink In A2
4	Datalink In B1
5	Datalink In B2
6	Datalink In C1
7	Datalink In C2
8	Datalink In D1
9	Datalink In D2

Word	Input I/O
0	Pad Word
1	Pad Word
2	Logic Status
3	Feedback
4	Datalink Out A1
5	Datalink Out A2
6	Datalink Out B1
7	Datalink Out B2
8	Datalink Out C1
9	Datalink Out C2
10	Datalink Out D1
11	Datalink Out D2

Table 6 - ControlLogix Controller I/O Image for Devices with 16-bit Reference/ Feedback and 32-bit Datalinks – Using Generic Profile

These products include the following:

- PowerFlex 700 drives with vector control
- PowerFlex 700L drives with 700 control
- PowerFlex Digital DC drives
- SMC-50 smart motor controllers

Word	Output I/O
0	Logic Command
1	Reference
2	Datalink In A1 (LSW)
3	Datalink In A1 (MSW)
4	Datalink In A2 (LSW)
5	Datalink In A2 (MSW)
6	Datalink In B1 (LSW)
7	Datalink In B1 (MSW)
8	Datalink In B2 (LSW)
9	Datalink In B2 (MSW)
10	Datalink In C1 (LSW)
11	Datalink In C1 (MSW)
12	Datalink In C2 (LSW)
13	Datalink In C2 (MSW)
14	Datalink In D1 (LSW)
15	Datalink In D1 (MSW)
16	Datalink In D2 (LSW)
17	Datalink In D2 (MSW)

Word	Input I/O
0	Pad Word
1	Pad Word
2	Logic Status
3	Feedback
4	Datalink Out A1 (LSW)
5	Datalink Out A1 (MSW)
6	Datalink Out A2 (LSW)
7	Datalink Out A2 (MSW)
8	Datalink Out B1 (LSW)
9	Datalink Out B1 (MSW)
10	Datalink Out B2 (LSW)
11	Datalink Out B2 (MSW)
12	Datalink Out C1 (LSW)
13	Datalink Out C1 (MSW)
14	Datalink Out C2 (LSW)
15	Datalink Out C2 (MSW)
16	Datalink Out D1 (LSW)
17	Datalink Out D1 (MSW)
18	Datalink Out D2 (LSW)
19	Datalink Out D2 (MSW)

Table 7 - ControlLogix Controller I/O Image for Drives with 32-bit Reference/ Feedback and 32-bit Datalinks – Using Generic Profile

These products include the following:

- PowerFlex 700S drives with Phase I or Phase II control
- PowerFlex 700L drives with 700S control
- PowerFlex 753 drives
- PowerFlex 755 drives

Word	Output I/O
0	Logic Command
1	Not Used
2	Reference (LSW)
3	Reference (MSW)
4	Datalink In A1 (LSW)
5	Datalink In A1 (MSW)
6	Datalink In A2 (LSW)
7	Datalink In A2 (MSW)
8	Datalink In B1 (LSW)
9	Datalink In B1 (MSW)
10	Datalink In B2 (LSW)
11	Datalink In B2 (MSW)
12	Datalink In C1 (LSW)
13	Datalink In C1 (MSW)
14	Datalink In C2 (LSW)
15	Datalink In C2 (MSW)
16	Datalink In D1 (LSW)
17	Datalink In D1 (MSW)
18	Datalink In D2 (LSW)
19	Datalink In D2 (MSW)

Word	Input I/O
0	Pad Word
1	Pad Word
2	Logic Status
3	Not Used
4	Feedback (LSW)
5	Feedback (MSW)
6	Datalink Out A1 (LSW)
7	Datalink Out A1 (MSW)
8	Datalink Out A2 (LSW)
9	Datalink Out A2 (MSW)
10	Datalink Out B1 (LSW)
11	Datalink Out B1 (MSW)
12	Datalink Out B2 (LSW)
13	Datalink Out B2 (MSW)
14	Datalink Out C1 (LSW)
15	Datalink Out C1 (MSW)
16	Datalink Out C2 (LSW)
17	Datalink Out C2 (MSW)
18	Datalink Out D1 (LSW)
19	Datalink Out D1 (MSW)
20	Datalink Out D2 (LSW)
21	Datalink Out D2 (MSW)

MicroLogix 1100/1400 Controller Image

The I/O image for these controllers always has 19 words of output and 19 words of input. However, depending on the size of the device's Reference/Feedback and Datalinks, specific words in the I/O image may not be used. Table 8, Table 9, and Table 10 show the I/O image when using various PowerFlex 7-Class drives, and all Datalinks enabled.

Table 8 - MicroLogix 1100/1400 I/O Image for PowerFlex 70/ 700/700H Drives and SMC Flex (16-bit Reference/Feedback and 16-bit Datalinks)

Word	Output I/O
0	Logic Command
1	Not used
2	Reference (MSW)
3	Not used
4	Datalink In A1 (MSW)
5	Not used
6	Datalink In A2 (MSW)
7	Not used
8	Datalink In B1 (MSW)
9	Not used
10	Datalink In B2 (MSW)
11	Not used
12	Datalink In C1 (MSW)
13	Not used
14	Datalink In C2 (MSW)
15	Not used
16	Datalink In D1 (MSW)
17	Not used
18	Datalink In D2 (MSW)

Word	Input I/O
0	Logic Status
1	Not used
2	Feedback (MSW)
3	Not used
4	Datalink Out A1 (MSW)
5	Not used
6	Datalink Out A2 (MSW)
7	Not used
8	Datalink Out B1 (MSW)
9	Not used
10	Datalink Out B2 (MSW)
11	Not used
12	Datalink Out C1 (MSW)
13	Not used
14	Datalink Out C2 (MSW)
15	Not used
16	Datalink Out D1 (MSW)
17	Not used
18	Datalink Out D2 (MSW)

Table 9 - MicroLogix 1100/1400 I/O Image for PowerFlex 700 VC Drives and SMC-50 Controllers (16-bit Reference/Feedback and 32-bit Datalinks)

Word	Output I/O
0	Logic Command
1	Not used
2	Reference (MSW)
3	Datalink In A1 (LSW)
4	Datalink In A1 (MSW)
5	Datalink In A2 (LSW)
6	Datalink In A2 (MSW)
7	Datalink In B1 (LSW)
8	Datalink In B1 (MSW)
9	Datalink In B2 (LSW)
10	Datalink In B2 (MSW)
11	Datalink In C1 (LSW)
12	Datalink In C1 (MSW)
13	Datalink In C2 (LSW)
14	Datalink In C2 (MSW)
15	Datalink In D1 (LSW)
16	Datalink In D1 (MSW)
17	Datalink In D2 (LSW)
18	Datalink In D2 (MSW)

Word	Input I/O
0	Logic Status
1	Not used
2	Feedback (MSW)
3	Datalink Out A1 (LSW)
4	Datalink Out A1 (MSW)
5	Datalink Out A2 (LSW)
6	Datalink Out A2 (MSW)
7	Datalink Out B1 (LSW)
8	Datalink Out B1 (MSW)
9	Datalink Out B2 (LSW)
10	Datalink Out B2 (MSW)
11	Datalink Out C1 (LSW)
12	Datalink Out C1 (MSW)
13	Datalink Out C2 (LSW)
14	Datalink Out C2 (MSW)
15	Datalink Out D1 (LSW)
16	Datalink Out D1 (MSW)
17	Datalink Out D2 (LSW)
18	Datalink Out D2 (MSW)

Table 10 - MicroLogix 1100/1400 I/O Image for PowerFlex 700S Series Drives (32-bit Reference/Feedback and 32-bit Datalinks)

Word	Output I/O
0	Logic Command
1	Reference (LSW)
2	Reference (MSW)
3	Datalink In A1 (LSW)
4	Datalink In A1 (MSW)
5	Datalink In A2 (LSW)
6	Datalink In A2 (MSW)
7	Datalink In B1 (LSW)
8	Datalink In B1 (MSW)
9	Datalink In B2 (LSW)
10	Datalink In B2 (MSW)
11	Datalink In C1 (LSW)
12	Datalink In C1 (MSW)
13	Datalink In C2 (LSW)
14	Datalink In C2 (MSW)
15	Datalink In D1 (LSW)
16	Datalink In D1 (MSW)
17	Datalink In D2 (LSW)
18	Datalink In D2 (MSW)

Word	Input I/O
0	Logic Status
1	Feedback (LSW)
2	Feedback (MSW)
3	Datalink Out A1 (LSW)
4	Datalink Out A1 (MSW)
5	Datalink Out A2 (LSW)
6	Datalink Out A2 (MSW)
7	Datalink Out B1 (LSW)
8	Datalink Out B1 (MSW)
9	Datalink Out B2 (LSW)
10	Datalink Out B2 (MSW)
11	Datalink Out C1 (LSW)
12	Datalink Out C1 (MSW)
13	Datalink Out C2 (LSW)
14	Datalink Out C2 (MSW)
15	Datalink Out D1 (LSW)
16	Datalink Out D1 (MSW)
17	Datalink Out D2 (LSW)
18	Datalink Out D2 (MSW)

Using Logic Command/ Status

The Logic Command is a 16-bit word of control data produced by the scanner and consumed by the adapter. The Logic Status is a 16-bit word of status data produced by the adapter and consumed by the scanner.

This manual contains the bit definitions for most compatible products available at the time of publication in Appendix D, Logic Command/Status Words. For other products, see their documentation.

Using Reference/Feedback

The Reference is produced by the controller and consumed by the adapter. The Feedback is produced by the adapter and consumed by the controller. The size of the Reference/Feedback is determined by the drive and displayed using adapter **Parameter 20 - [Ref/Fdbk Size]**.

Size	Valid Values
16-bit	-32768 to 32767
32-bit	-2147483648 to 2147483647

When the Reference and Feedback are enabled and a ControlLogix controller with a device Add-on Profile or Classic Profile is used, specific controller tags are automatically created, sized (16-bit or 32-bit), and placed in the I/O image.

PowerFlex 7-Class Drives

The Reference value is an unscaled value; it is NOT in Hertz or RPM. The Reference uses a '32767' scale. The '32767' endpoint of the scale is equal to the value of drive parameter 55 - [Maximum Freq], which has a default value of 130 Hz. For all PowerFlex 70/700 drives, default scaling is 0...15123 which is equal to 0...60.0 Hz. This is based on the formula shown below. Reference scaling is limited by drive parameter 82 - [Maximum Speed]. If the default value of 60 Hz. for parameter 82 - [Maximum Speed] is changed, the speed Reference scaling also changes. To determine Reference scaling, use the following formula:

(Parameter 82 ÷ Parameter 55) * 32767 = Scaling

Using drive parameter 82 and 55 default values, speed Reference scaling is:

(60 Hz ÷ 130 Hz) * 32767 = 15123

Therefore, 0...15123 = 0...60.0 Hz.

If parameter 82 - [Maximum Speed] is changed to 90 Hz, then:

(90 Hz ÷ 130 Hz) * 32767 = 22685

Therefore, 0...22685 = 0...90.0 Hz.

A graphic representation of this Reference scaling is shown below.

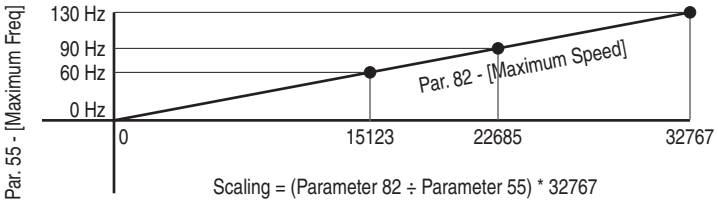

For PowerFlex 70 EC drives, firmware 2.xxx or later, or PowerFlex 700 VC drives, firmware 3.xxx or later, drive parameter 298 - [DPI Ref Select] was added to simplify scaling for the speed Reference. When drive parameter 298 - [DPI Ref Select] is set to its default '0' (Max Freq), the speed Reference scaling is as shown above. However, when parameter 298 - [DPI Ref Select] is set to '1' (Max Speed), the speed Reference scaling is equal to parameter 82 - [Max Speed]:

Parameter 82 = Scaling

Using the parameter 82 default value, speed Reference scaling is:

0...32767 = 0...60.0 Hz.

If parameter 82 - [Maximum Speed] is changed to 90 Hz, then:

90 Hz = 32767

Speed Feedback uses the same scaling as the speed Reference.

TIP For PowerFlex 700 VC drives, firmware 3.xxx or later, parameter 299 - [DPI Fdbk Select] enables you to select the feedback data coming from the drive over DPI. The default is 'Speed Fdbk' in Hz or RPM determined by parameter 079 - [Speed Units]. The data selection for parameter 299 is also displayed on the 1st line of the HIM and on DriveExplorer and DriveExecutive software screens in the drive status area of the screen.

The controller in the system sends a reference to the SMC, but it is not used for control purposes in the current release.

The SMC products use the feedback to send motor current information.

Using Datalinks

A Datalink is a mechanism used by PowerFlex drives and SMCs to transfer data to and from the controller. Datalinks allow a device parameter value to be read or written without using an Explicit Message. When enabled, each Datalink occupies two 16-bit or 32-bit words in both the input and output image. Use adapter **Parameter 21 - [Datalink Size]** to determine whether the drive uses 16-bit or 32-bit words for Datalinks.

Rules for Using Datalinks

- Each set of Datalink parameters in a device can be used by only one adapter. If more than one adapter is connected to a single device, multiple adapters cannot use the same Datalink.
- Parameter settings in the device determine the data passed through the Datalink mechanism. See the documentation for your device.
- When you use a Datalink to change a value, the value is NOT written to the Nonvolatile Storage (NVS). The value is stored in volatile memory and lost when the device loses power. Therefore, use Datalinks when you need to change a value of a parameter frequently.

Using 16-Bit Datalinks to Read/Write 32-Bit Parameters

This subsection only pertains to the SMC Flex and PowerFlex 70 (SC or EC), PowerFlex 700 (SC), and PowerFlex 700H drives which use 16-bit Datalinks. To read or write a 32-bit parameter using 16-bit Datalinks, typically both Datalinks of a pair (A, B, C, D) are set to the same 32-bit parameter. For example, to read parameter 10 - [Elapsed Run Time] in a PowerFlex 70 drive, both Datalink A1 Out (Parameter 310) and Datalink A2 Out (Parameter 311) are set to '10'. Datalink A1 Out will contain the least significant word (LSW) and Datalink A2 Out will contain the most significant word (MSW).

32-bit data is stored in binary as follows:

MSW	2^{31} through 2^{16}
LSW	2^{15} through 2^{0}

In this example, the parameter 10 - [Elapsed Run Time] value of 6553.9 Hrs is read as '6553.9' in Datalink A1 Out (Parameter 310) and Datalink A2 Out (Parameter 311).

Datalink	Word	Parameter	Data (Hex)
A1 Out	LSW	10	0003
A2 Out	MSW	10	0001

Conversion Example:

Parameter 010 - [Elapsed Run Time] = 6553.9 Hrs
MSW = $0001_{hex} = 0001_{binary} = 2^{16} = 65536$
LSW = 0003_{hex} =3
Engineering Value = 65536 + 3 = 65539
Parameter 10 Displayed Value = 6553.9 Hrs

Regardless of the Datalink combination, Datalink x1 Out will always contain the LSW and Datalink x2 Out will always contain the MSW. In the following example, the PowerFlex 70 drive parameter 242 - [Power Up Marker] contains a value of 88.4541 hours.

Datalink	Word	Parameter	Data (Hex)
A2 Out	MSW	242	000D
B1 Out	LSW	242	7F3D

Conversion Example:

Parameter 242 - [Power Up Marker] = 88.4541 hours
MSW = $000D_{hex} = 1101_{binary} = 2^{19} + 2^{18} + 2^{16} = 851968$
LSW = $7F3D_{hex} = 32573$
Engineering Value = 851968 + 32573 = 884541
Parameter 242 Displayed Value = 88.4541 Hrs

Example Ladder Logic Program Information

The example ladder logic programs in the sections of this chapter are intended for and operate PowerFlex 7-Class drives and SMC Flex controllers.

Functions of the Example Programs

The example programs enable you to do the following:

- Receive Logic Status information from the drive.
- Send a Logic Command to control the drive (for example, start, stop).
- Send a Reference to the drive and receive Feedback from the drive.
- Send/receive Datalink data to/from the drive.

Logic Command/Status Words

These examples use the Logic Command word and Logic Status word for PowerFlex 70/700 drives. See Appendix D to view details. The definition of the bits in these words may vary if you are using a different DPI device. See the documentation for your device.

ControlLogix Controller Example

Creating Ladder Logic Using the RSLogix 5000 Device Add-on Profiles, Version 16.00 or Later

Because the device Add-on Profile automatically created descriptive controller tags (Figure 9) for the entire I/O image in Chapter 4, you can use these tags to directly control and monitor the device without creating any ladder logic program. However, if you intend to use Human Machine Interface devices (PanelView, and so forth) to operate the device and view its status, you will need to create descriptive user-defined Program tags (Figure 19) and a ladder logic program that will pass the Controller tag data to the Program tags.

Figure 19 - ControlLogix Program Tags for Device Add-on Profile Ladder Logic Program Example

Name	Style	Data Type
Command_Clear_Faults	Decimal	BOOL
Command_Forward_Reverse	Decimal	BOOL
Command_Jog	Decimal	BOOL
Command_Start	Decimal	BOOL
Command_Stop	Decimal	BOOL
⊞ Speed_Feedback	Decimal	DINT
⊞ Speed_Reference	Decimal	DINT
Status_Active	Decimal	BOOL
Status_At_Speed	Decimal	BOOL
Status_Faulted	Decimal	BOOL
Status_Forward	Decimal	BOOL
Status_Ready	Decimal	BOOL
Status_Reverse	Decimal	BOOL

An example ladder logic program that uses the automatically created descriptive Controller tags and passes their data to the user-defined Program tags is shown in Figure 20 and Figure 21. Note that the prefix for the device Controller tags is determined by the name assigned when configuring the I/O (Chapter 4).

Figure 20 - ControlLogix Example Ladder Logic Program Using a Device Add-on Profile for Logic Status/Feedback

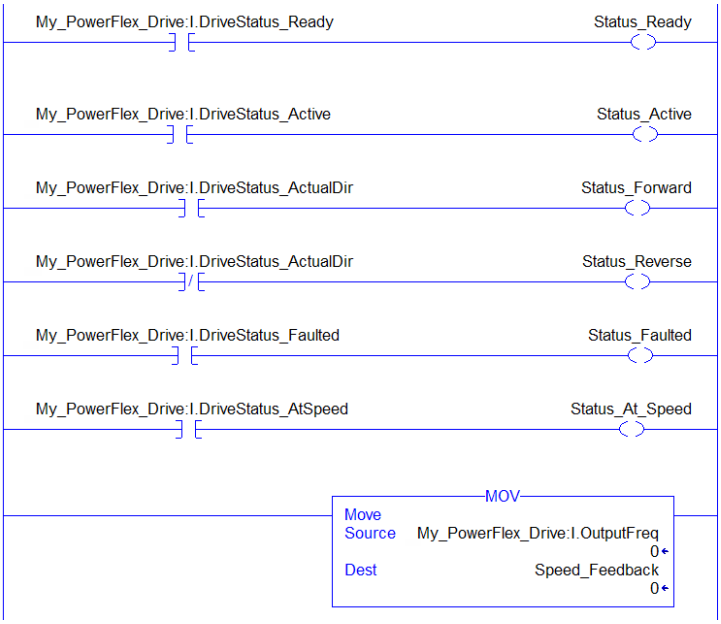

Figure 21 - ControlLogix Example Ladder Logic Program Using a Device Add-on Profile for Logic Command/Reference

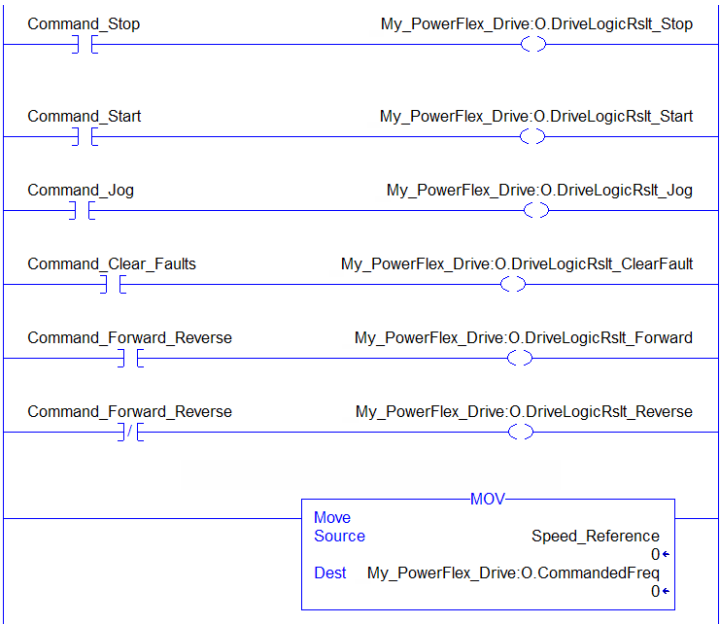

Creating Ladder Logic Using the RSLogix 5000 Classic Profile, Versions 1300…15.00

Since the RSLogix 5000 Classic Profile has been significantly improved upon by RSLogix 5000 device Add-on Profiles, version 16.00 or later, we highly

recommended using the RSLogix 5000 device Add-on Profiles to take advantage of their benefits (more intuitive, time saving, and less likely to make ladder logic program errors).

Creating Ladder Logic Using the RSLogix 5000 Generic Profile, All Versions

Drive and Adapter Parameter Settings

The following drive and adapter settings were used for the example ladder logic program in this section.

Device	Parameter	Value	Description
PowerFlex 70 EC Drive	90 - [Speed Ref A Sel]	22 (DPI Port 5)	Assigns 20-COMM-ER to be used for the Reference.
	300 - [Data In A1]	140	Points to Par. 140 - [Accel Time 1]
	301 - [Data In A2]	142	Points to Par. 142 - [Decel Time 1]
	302 - [Data In B1]	100	Points to Par. 100 - [Jog Speed]
	303 - [Data In B2]	155	Points to Par. 155 - [Stop Mode A]
	304 - [Data In C1]	101	Points to Par. 101 - [Preset Speed 1]
	305 - [Data In C2]	102	Points to Par. 102 - [Preset Speed 2]
	306 - [Data In D1]	103	Points to Par. 103 - [Preset Speed 3]
	307 - [Data In D2]	104	Points to Par. 104 - [Preset Speed 4]
	310 - [Data Out A1]	140	Points to Par. 140 - [Accel Time 1]
	311 - [Data Out A2]	142	Points to Par. 142 - [Decel Time 1]
	312 - [Data Out B1]	100	Points to Par. 100 - [Jog Speed]
	313 - [Data Out B2]	155	Points to Par. 155 - [Stop Mode A]
	314 - [Data Out C1]	101	Points to Par. 101 - [Preset Speed 1]
	315 - [Data Out C2]	102	Points to Par. 102 - [Preset Speed 2]
	316 - [Data Out D1]	103	Points to Par. 103 - [Preset Speed 3]
	317 - [Data Out D2]	104	Points to Par. 104 - [Preset Speed 4]
20-COMM-ER Adapter	04 - [IP Addr Cfg 1] ⋮ 07 - [IP Addr Cfg 4]	10.91.100.79	IP address for the adapter.
	08 - [Subnet Cfg 1] ⋮ 11 - [Subnet Cfg 4]	255.255.248.0	Subnet mask for the adapter.
	23 - [DPI I/O Cfg]	xxx1 1111	Enables Cmd/Ref and Datalinks A…D.
	35 - [M-S Input]	xxx1 1111	Configures the I/O Data to be transferred from the controller on the network to the drive.
	36 - [M-S Output]	xxx1 1111	Configures the I/O Data to be transferred from the drive to the controller on the network.

TIP Data In parameters are inputs into the device that come from controller outputs (for example, data to write to a device parameter). Data Out parameters are outputs from the device that go to controller inputs (for example, data to read a device parameter).

Controller Tags

When you add the adapter and drive to the I/O configuration (Chapter 4), RSLogix 5000 software automatically creates generic (non-descriptive) controller tags for them. In this example program, the following controller tags are used.

Figure 22 - ControlLogix Controller Tags for Drive Generic Profile Example Ladder Logic Program

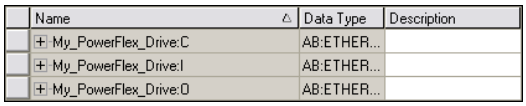

Name	Data Type	Description
⊞ My_PowerFlex_Drive:C	AB:ETHER...	
⊞ My_PowerFlex_Drive:I	AB:ETHER...	
⊞ My_PowerFlex_Drive:O	AB:ETHER...	

You can expand the Input and Output tags to reveal the input and output configuration.

Figure 23 - ControlLogix Input Image for Drive Generic Profile Example Ladder Logic Program

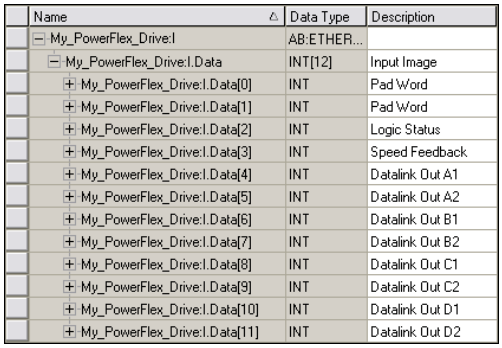

Name	Data Type	Description
⊟ My_PowerFlex_Drive:I	AB:ETHER...	
⊟ My_PowerFlex_Drive:I.Data	INT[12]	Input Image
⊞ My_PowerFlex_Drive:I.Data[0]	INT	Pad Word
⊞ My_PowerFlex_Drive:I.Data[1]	INT	Pad Word
⊞ My_PowerFlex_Drive:I.Data[2]	INT	Logic Status
⊞ My_PowerFlex_Drive:I.Data[3]	INT	Speed Feedback
⊞ My_PowerFlex_Drive:I.Data[4]	INT	Datalink Out A1
⊞ My_PowerFlex_Drive:I.Data[5]	INT	Datalink Out A2
⊞ My_PowerFlex_Drive:I.Data[6]	INT	Datalink Out B1
⊞ My_PowerFlex_Drive:I.Data[7]	INT	Datalink Out B2
⊞ My_PowerFlex_Drive:I.Data[8]	INT	Datalink Out C1
⊞ My_PowerFlex_Drive:I.Data[9]	INT	Datalink Out C2
⊞ My_PowerFlex_Drive:I.Data[10]	INT	Datalink Out D1
⊞ My_PowerFlex_Drive:I.Data[11]	INT	Datalink Out D2

PowerFlex 70 Drive
16-bit Speed Feedback and Datalinks

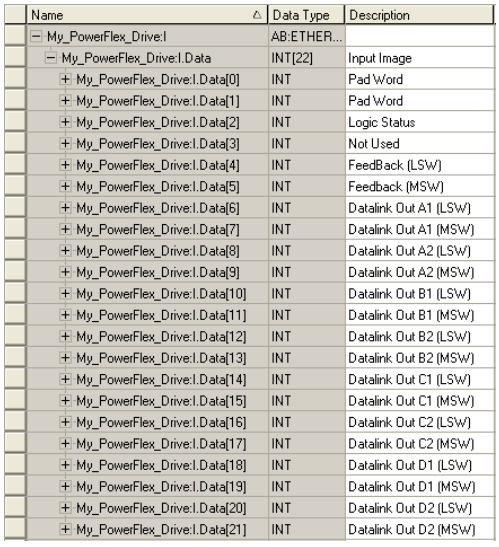

Name	Data Type	Description
⊟ My_PowerFlex_Drive:I	AB:ETHER...	
⊟ My_PowerFlex_Drive:I.Data	INT[22]	Input Image
⊞ My_PowerFlex_Drive:I.Data[0]	INT	Pad Word
⊞ My_PowerFlex_Drive:I.Data[1]	INT	Pad Word
⊞ My_PowerFlex_Drive:I.Data[2]	INT	Logic Status
⊞ My_PowerFlex_Drive:I.Data[3]	INT	Not Used
⊞ My_PowerFlex_Drive:I.Data[4]	INT	FeedBack (LSW)
⊞ My_PowerFlex_Drive:I.Data[5]	INT	Feedback (MSW)
⊞ My_PowerFlex_Drive:I.Data[6]	INT	Datalink Out A1 (LSW)
⊞ My_PowerFlex_Drive:I.Data[7]	INT	Datalink Out A1 (MSW)
⊞ My_PowerFlex_Drive:I.Data[8]	INT	Datalink Out A2 (LSW)
⊞ My_PowerFlex_Drive:I.Data[9]	INT	Datalink Out A2 (MSW)
⊞ My_PowerFlex_Drive:I.Data[10]	INT	Datalink Out B1 (LSW)
⊞ My_PowerFlex_Drive:I.Data[11]	INT	Datalink Out B1 (MSW)
⊞ My_PowerFlex_Drive:I.Data[12]	INT	Datalink Out B2 (LSW)
⊞ My_PowerFlex_Drive:I.Data[13]	INT	Datalink Out B2 (MSW)
⊞ My_PowerFlex_Drive:I.Data[14]	INT	Datalink Out C1 (LSW)
⊞ My_PowerFlex_Drive:I.Data[15]	INT	Datalink Out C1 (MSW)
⊞ My_PowerFlex_Drive:I.Data[16]	INT	Datalink Out C2 (LSW)
⊞ My_PowerFlex_Drive:I.Data[17]	INT	Datalink Out C2 (MSW)
⊞ My_PowerFlex_Drive:I.Data[18]	INT	Datalink Out D1 (LSW)
⊞ My_PowerFlex_Drive:I.Data[19]	INT	Datalink Out D1 (MSW)
⊞ My_PowerFlex_Drive:I.Data[20]	INT	Datalink Out D2 (LSW)
⊞ My_PowerFlex_Drive:I.Data[21]	INT	Datalink Out D2 (MSW)

PowerFlex 700S-Series Drive
32-bit Speed Feedback and Datalinks

Figure 24 - ControlLogix Output Image for Drive Generic Profile Example Ladder Logic Program

Name	Data Type	Description
My_PowerFlex_Drive:O	AB:ETHER...	
My_PowerFlex_Drive:O.Data	INT[10]	Output Image
My_PowerFlex_Drive:O.Data[0]	INT	Logic Command
My_PowerFlex_Drive:O.Data[1]	INT	Speed Reference
My_PowerFlex_Drive:O.Data[2]	INT	Datalink In A1
My_PowerFlex_Drive:O.Data[3]	INT	Datalink In A2
My_PowerFlex_Drive:O.Data[4]	INT	Datalink In B1
My_PowerFlex_Drive:O.Data[5]	INT	Datalink In B2
My_PowerFlex_Drive:O.Data[6]	INT	Datalink In C1
My_PowerFlex_Drive:O.Data[7]	INT	Datalink In C2
My_PowerFlex_Drive:O.Data[8]	INT	Datalink In D1
My_PowerFlex_Drive:O.Data[9]	INT	Datalink In D2

PowerFlex 70 Drive
16-bit Speed Reference and Datalinks

Name	Data Type	Description
My_PowerFlex_Drive:O	AB:ETHER...	
My_PowerFlex_Drive:O.Data	INT[20]	Output Image
My_PowerFlex_Drive:O.Data[0]	INT	Logic Command
My_PowerFlex_Drive:O.Data[1]	INT	Not Used
My_PowerFlex_Drive:O.Data[2]	INT	Reference (LSW)
My_PowerFlex_Drive:O.Data[3]	INT	Reference (MSW)
My_PowerFlex_Drive:O.Data[4]	INT	Datalink In A1 (LSW)
My_PowerFlex_Drive:O.Data[5]	INT	Datalink In A1 (MSW)
My_PowerFlex_Drive:O.Data[6]	INT	Datalink In A2 (LSW)
My_PowerFlex_Drive:O.Data[7]	INT	Datalink In A2 (MSW)
My_PowerFlex_Drive:O.Data[8]	INT	Datalink In B1 (LSW)
My_PowerFlex_Drive:O.Data[9]	INT	Datalink In B1 (MSW)
My_PowerFlex_Drive:O.Data[10]	INT	Datalink In B2 (LSW)
My_PowerFlex_Drive:O.Data[11]	INT	Datalink In B2 (MSW)
My_PowerFlex_Drive:O.Data[12]	INT	Datalink In C1 (LSW)
My_PowerFlex_Drive:O.Data[13]	INT	Datalink In C1 (MSW)
My_PowerFlex_Drive:O.Data[14]	INT	Datalink In C2 (LSW)
My_PowerFlex_Drive:O.Data[15]	INT	Datalink In C2 (MSW)
My_PowerFlex_Drive:O.Data[16]	INT	Datalink In D1 (LSW)
My_PowerFlex_Drive:O.Data[17]	INT	Datalink In D1 (MSW)
My_PowerFlex_Drive:O.Data[18]	INT	Datalink In D2 (LSW)
My_PowerFlex_Drive:O.Data[19]	INT	Datalink In D2 (MSW)

PowerFlex 700S-Series Drive
32-bit Speed Reference and Datalinks

Program Tags

To use the Controller tags that are automatically created, you need to create the following Program tags for this example program.

Figure 25 - ControlLogix Program Tags for Drive Generic Profile Example Ladder Logic Program

Name	Style	Data Type
Command_Clear_Faults	Decimal	BOOL
Command_Forward_Reverse	Decimal	BOOL
Command_Jog	Decimal	BOOL
Command_Start	Decimal	BOOL
Command_Stop	Decimal	BOOL
Speed_Feedback	Decimal	DINT
Speed_Reference	Decimal	DINT
Status_Active	Decimal	BOOL
Status_At_Speed	Decimal	BOOL
Status_Faulted	Decimal	BOOL
Status_Forward	Decimal	BOOL
Status_Ready	Decimal	BOOL
Status_Reverse	Decimal	BOOL

For information on speed Reference and Feedback scaling, see PowerFlex 7-Class Drives on page 85.

Figure 26 - ControlLogix Example Ladder Logic Program Using a Drive Generic Profile for Logic Status/Feedback

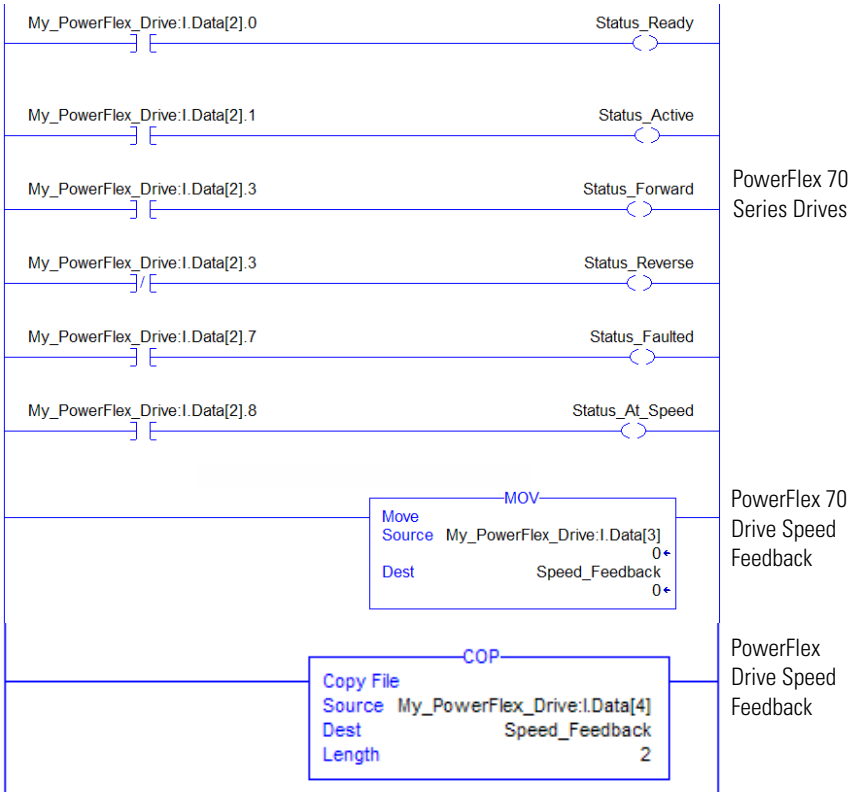

Figure 27 - ControlLogix Example Ladder Logic Program Using a Drive Generic Profile for Logic Command/Reference

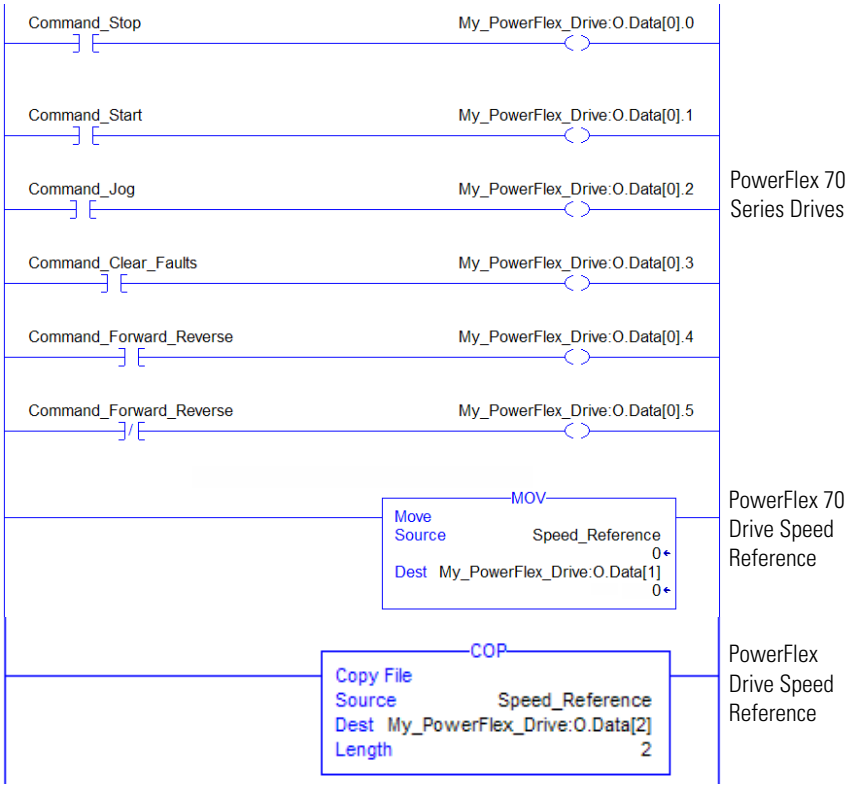

Example Datalink Data

The Datalink data used in the example program is shown in Figure 28. Note that to describe the parameters to which the Datalinks are assigned, you may want to add descriptions to the automatically-created generic controller tags or create a User Defined Data Types (UDDT).

Figure 28 - ControlLogix Example Datalinks for Ladder Logic Program Using a Drive Generic Profile

Name	Value	Data Type	Description
My_PowerFlex_Drive:I	{...}	AB:ETHER...	
My_PowerFlex_Drive:I.Data	{...}	INT[12]	Input Image
My_PowerFlex_Drive:I.Data[0]	0	INT	Pad Word
My_PowerFlex_Drive:I.Data[1]	0	INT	Pad Word
My_PowerFlex_Drive:I.Data[2]	0	INT	Logic Status
My_PowerFlex_Drive:I.Data[3]	0	INT	Speed Feedback
My_PowerFlex_Drive:I.Data[4]	50	INT	Datalink Out A1
My_PowerFlex_Drive:I.Data[5]	50	INT	Datalink Out A2
My_PowerFlex_Drive:I.Data[6]	100	INT	Datalink Out B1
My_PowerFlex_Drive:I.Data[7]	1	INT	Datalink Out B2
My_PowerFlex_Drive:I.Data[8]	200	INT	Datalink Out C1
My_PowerFlex_Drive:I.Data[9]	300	INT	Datalink Out C2
My_PowerFlex_Drive:I.Data[10]	400	INT	Datalink Out D1
My_PowerFlex_Drive:I.Data[11]	500	INT	Datalink Out D2
My_PowerFlex_Drive:O	{...}	AB:ETHER...	
My_PowerFlex_Drive:O.Data	{...}	INT[10]	Output Image
My_PowerFlex_Drive:O.Data[0]	0	INT	Logic Command
My_PowerFlex_Drive:O.Data[1]	0	INT	Speed Reference
My_PowerFlex_Drive:O.Data[2]	50	INT	Datalink In A1
My_PowerFlex_Drive:O.Data[3]	50	INT	Datalink In A2
My_PowerFlex_Drive:O.Data[4]	100	INT	Datalink In B1
My_PowerFlex_Drive:O.Data[5]	1	INT	Datalink In B2
My_PowerFlex_Drive:O.Data[6]	200	INT	Datalink In C1
My_PowerFlex_Drive:O.Data[7]	300	INT	Datalink In C2
My_PowerFlex_Drive:O.Data[8]	400	INT	Datalink In D1
My_PowerFlex_Drive:O.Data[9]	500	INT	Datalink In D2

PowerFlex 70 Drive

Name	Value	Data Type	Description
My_PowerFlex_Drive:I	{...}	AB:ETHER...	
My_PowerFlex_Drive:I.Data	{...}	INT[22]	Input Image
My_PowerFlex_Drive:I.Data[0]	0	INT	Pad Word
My_PowerFlex_Drive:I.Data[1]	0	INT	Pad Word
My_PowerFlex_Drive:I.Data[2]	1295	INT	Logic Status
My_PowerFlex_Drive:I.Data[3]	0	INT	Not Used
My_PowerFlex_Drive:I.Data[4]	25000	INT	Feedback (LSW)
My_PowerFlex_Drive:I.Data[5]	0	INT	Feedback (MSW)
My_PowerFlex_Drive:I.Data[6]	-26970	INT	Datalink Out A1 (LSW)
My_PowerFlex_Drive:I.Data[7]	17432	INT	Datalink Out A1 (MSW)
My_PowerFlex_Drive:I.Data[8]	15562	INT	Datalink Out A2 (LSW)
My_PowerFlex_Drive:I.Data[9]	5457	INT	Datalink Out A2 (MSW)
My_PowerFlex_Drive:I.Data[10]	0	INT	Datalink Out B1 (LSW)
My_PowerFlex_Drive:I.Data[11]	16840	INT	Datalink Out B1 (MSW)
My_PowerFlex_Drive:I.Data[12]	0	INT	Datalink Out B2 (LSW)
My_PowerFlex_Drive:I.Data[13]	0	INT	Datalink Out B2 (MSW)
My_PowerFlex_Drive:I.Data[14]	0	INT	Datalink Out C1 (LSW)
My_PowerFlex_Drive:I.Data[15]	0	INT	Datalink Out C1 (MSW)
My_PowerFlex_Drive:I.Data[16]	0	INT	Datalink Out C2 (LSW)
My_PowerFlex_Drive:I.Data[17]	0	INT	Datalink Out C2 (MSW)
My_PowerFlex_Drive:I.Data[18]	0	INT	Datalink Out D1 (LSW)
My_PowerFlex_Drive:I.Data[19]	0	INT	Datalink Out D1 (MSW)
My_PowerFlex_Drive:I.Data[20]	0	INT	Datalink Out D2 (LSW)
My_PowerFlex_Drive:I.Data[21]	0	INT	Datalink Out D2 (MSW)
My_PowerFlex_Drive:O	{...}	AB:ETHER...	
My_PowerFlex_Drive:O.Data	{...}	INT[20]	Output Image
My_PowerFlex_Drive:O.Data[0]	0	INT	Logic Command
My_PowerFlex_Drive:O.Data[1]	0	INT	Not Used
My_PowerFlex_Drive:O.Data[2]	25000	INT	Reference (LSW)
My_PowerFlex_Drive:O.Data[3]	0	INT	Reference (MSW)
My_PowerFlex_Drive:O.Data[4]	0	INT	Datalink In A1 (LSW)
My_PowerFlex_Drive:O.Data[5]	16680	INT	Datalink In A1 (MSW)
My_PowerFlex_Drive:O.Data[6]	4430	INT	Datalink In A2 (LSW)
My_PowerFlex_Drive:O.Data[7]	1909	INT	Datalink In A2 (MSW)
My_PowerFlex_Drive:O.Data[8]	-2621	INT	Datalink In B1 (LSW)
My_PowerFlex_Drive:O.Data[9]	16664	INT	Datalink In B1 (MSW)
My_PowerFlex_Drive:O.Data[10]	0	INT	Datalink In B2 (LSW)
My_PowerFlex_Drive:O.Data[11]	0	INT	Datalink In B2 (MSW)

PowerFlex 700S-Series Drive

For PowerFlex 7-Class drives, the scaling may need to be multiplied by 10 or 100, depending on the parameter. For more information, see Using Datalinks on page 86.

MicroLogix 1100/1400 Controller Example

Drive and Adapter Parameter Settings

The following drive and adapter settings were used for the example ladder logic program in this section.

Device	Parameter	Value	Description
PowerFlex 70 EC Drive	90 - [Speed Ref A Sel]	22 (DPI Port 5)	Assigns 20-COMM-ER to be used for the Reference.
	300 - [Data In A1]	140	Points to Par. 140 - [Accel Time 1]
	301 - [Data In A2]	142	Points to Par. 142 - [Decel Time 1]
	302 - [Data In B1]	100	Points to Par. 100 - [Jog Speed]
	303 - [Data In B2]	155	Points to Par. 155 - [Stop Mode A]
	304 - [Data In C1]	101	Points to Par. 101 - [Preset Speed 1]
	305 - [Data In C2]	102	Points to Par. 102 - [Preset Speed 2]
	306 - [Data In D1]	103	Points to Par. 103 - [Preset Speed 3]
	307 - [Data In D2]	104	Points to Par. 104 - [Preset Speed 4]
	310 - [Data Out A1]	140	Points to Par. 140 - [Accel Time 1]
	311 - [Data Out A2]	142	Points to Par. 142 - [Decel Time 1]
	312 - [Data Out B1]	100	Points to Par. 100 - [Jog Speed]
	313 - [Data Out B2]	155	Points to Par. 155 - [Stop Mode A]
	314 - [Data Out C1]	101	Points to Par. 101 - [Preset Speed 1]
	315 - [Data Out C2]	102	Points to Par. 102 - [Preset Speed 2]
	316 - [Data Out D1]	103	Points to Par. 103 - [Preset Speed 3]
	317 - [Data Out D2]	104	Points to Par. 104 - [Preset Speed 4]
20-COMM-ER Adapter	04 - [IP Addr Cfg 1] ⋮ 07 - [IP Addr Cfg 4]	10.91.100.79	IP address for the adapter.
	08 - [Subnet Cfg 1] ⋮ 11 - [Subnet Cfg 4]	255.255.248.0	Subnet mask for the adapter.
	23 - [DPI I/O Cfg]	xxx1 1111	Enables Cmd/Ref and Datalinks A…D.
	35 - [M-S Input]	xxx1 1111	Configures the I/O Data to be transferred from the controller on the network to the drive.
	36 - [M-S Output]	xxx1 1111	Configures the I/O Data to be transferred from the drive to the controller on the network.

TIP Data In parameters are inputs into the drive that come from controller outputs (for example, data to write to a drive parameter). Data Out parameters are outputs from the drive that go to controller inputs (for example, data to read a drive parameter).

TIP When using a drive that has 16-bit Datalinks (PowerFlex 70, PowerFlex 700, and PowerFlex 700H drives) to transfer a 32-bit parameter, two contiguous drive Datalink parameters (for example, Data Out A1/A2, B1/B2, etc.) are required. To determine if a parameter is a 32-bit parameter, see the Parameter section in the drive documentation and look for a symbol in the 'No.' column. (All parameters in PowerFlex 700 Series B drives are 32-bit parameters.) For example, parameter 3 - [Output Current] in a PowerFlex 70 EC drive is a 32-bit parameter. When using a drive that has 32-bit Datalinks (PowerFlex 700 VC and PowerFlex 700S), only one drive Datalink parameter is required to transfer any parameter.

Understanding Controller Data Table Addresses

Because MicroLogix 1100/1400 controllers are 16-bit platforms and are used with the 32-bit 20-COMM-ER adapter, the data will be transposed from the least-significant word (LSW) to the most-significant word (MSW) in the controller.

When the I/O was configured (Chapter 4), an available data table address (N20) was used. Figure 29 shows the entire data file address structure for this example.

Figure 29 - Data File Table for Example Ladder Logic Program

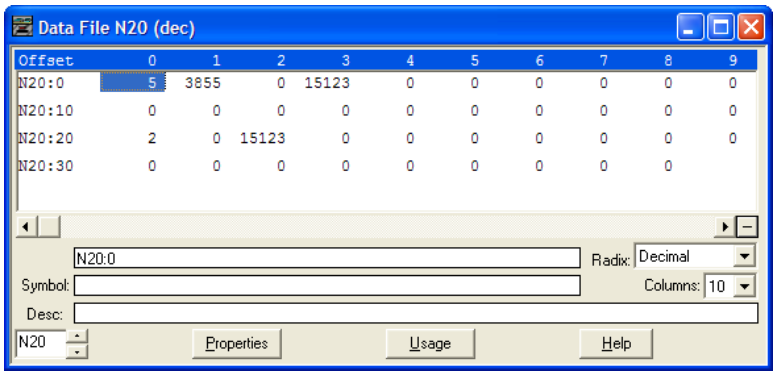

Important: The N20:0 data table address in this example is used to set a control timeout value (in seconds) which determines how long it will take the adapter to detect a communication loss. Enter a valid value (1…32767) for N20:0. A value of zero (0) is not valid, because it disables the timeout and all I/O connections (Logic Command/Status, Reference/Feedback, and Datalinks) intended for the drive will not execute. A timeout value of 5…20 seconds is recommended.

Depending on the drive you are using, Table 11, Table 12, Table 13, or Table 14 show the I/O definitions as they relate to the N20 data table (Figure 29) being used in this example.

When using PowerFlex 70 or 70 EC, PowerFlex 700, PowerFlex 700VC drives, or SMC Flex controllers—which all contain INT (16-bit format) data types, you will read from and write to the MSW data table address in the controller.

When using PowerFlex 700 VC drives or SMC-50 controllers, which contain DINT (32-bit format) data types, you will read from and write to the LSW data table address in the controller.

When using PowerFlex 700S drives, which contain both DINT (32-bit format) and REAL (floating point format) data types, you will always read from and write to the LSW data table address in the controller first. Then if the data value exceeds 16 bits, the remaining value will be in the MSW data table address.

Table 11 - Controller Data Table Addresses for PowerFlex 70/70 EC, PowerFlex 700 Drives, and SMC Flex Controllers

Data Table Address	Description
N20:1	Logic Status (see Appendix D)
N20:2	Reserved
N20:3	Speed Feedback
N20:4	Value of parameter assigned to Parameter 310 [Data Out A1] LSW
N20:5	Value of parameter assigned to Parameter 310 [Data Out A1] MSW
N20:6	Value of parameter assigned to Parameter 311 [Data Out A2] LSW
N20:7	Value of parameter assigned to Parameter 311 [Data Out A2] MSW
N20:8	Value of parameter assigned to Parameter 312 [Data Out B1] LSW
N20:9	Value of parameter assigned to Parameter 312 [Data Out B1] MSW
N20:10	Value of parameter assigned to Parameter 313 [Data Out B2] LSW
N20:11	Value of parameter assigned to Parameter 313 [Data Out B2] MSW
N20:12	Value of parameter assigned to Parameter 314 [Data Out C1] LSW
N20:13	Value of parameter assigned to Parameter 314 [Data Out C1] MSW
N20:14	Value of parameter assigned to Parameter 315 [Data Out C2] LSW
N20:15	Value of parameter assigned to Parameter 315 [Data Out C2] MSW
N20:16	Value of parameter assigned to Parameter 316 [Data Out D1] LSW
N20:17	Value of parameter assigned to Parameter 316 [Data Out D1] MSW
N20:18	Value of parameter assigned to Parameter 317 [Data Out D2] LSW
N20:19	Value of parameter assigned to Parameter 317 [Data Out D2] MSW
N20:20	Logic Command (see Appendix D)
N20:21	Reserved
N20:22	Speed Reference
N20:23	Value of parameter assigned to Parameter 300 [Data In A1] LSW
N20:24	Value of parameter assigned to Parameter 300 [Data In A1] MSW
N20:25	Value of parameter assigned to Parameter 301 [Data In A2] LSW
N20:26	Value of parameter assigned to Parameter 301 [Data In A2] MSW
N20:27	Value of parameter assigned to Parameter 302 [Data In B1] LSW
N20:28	Value of parameter assigned to Parameter 302 [Data In B1] MSW
N20:29	Value of parameter assigned to Parameter 303 [Data In B2] LSW
N20:30	Value of parameter assigned to Parameter 303 [Data In B2] MSW
N20:31	Value of parameter assigned to Parameter 304 [Data In C1] LSW
N20:32	Value of parameter assigned to Parameter 304 [Data In C1] MSW
N20:33	Value of parameter assigned to Parameter 305 [Data In C2] LSW
N20:34	Value of parameter assigned to Parameter 305 [Data In C2] MSW
N20:35	Value of parameter assigned to Parameter 306 [Data In D1] LSW
N20:36	Value of parameter assigned to Parameter 306 [Data In D1] MSW
N20:37	Value of parameter assigned to Parameter 307 [Data In D2] LSW
N20:38	Value of parameter assigned to Parameter 307 [Data In D2] MSW

Table 12 - Controller Data Table Addresses for PowerFlex 700 VC Drives and SMC-50 Controllers

Data Table Address	Description
N20:1	Logic Status (see Appendix D)
N20:2	Reserved
N20:3	Speed Feedback
N20:4	Value of parameter assigned to Parameter 310 [Data Out A1] LSW
N20:5	Value of parameter assigned to Parameter 310 [Data Out A1] MSW
N20:6	Value of parameter assigned to Parameter 311 [Data Out A2] LSW
N20:7	Value of parameter assigned to Parameter 311 [Data Out A2] MSW
N20:8	Value of parameter assigned to Parameter 312 [Data Out B1] LSW
N20:9	Value of parameter assigned to Parameter 312 [Data Out B1] MSW
N20:10	Value of parameter assigned to Parameter 313 [Data Out B2] LSW
N20:11	Value of parameter assigned to Parameter 313 [Data Out B2] MSW
N20:12	Value of parameter assigned to Parameter 314 [Data Out C1] LSW
N20:13	Value of parameter assigned to Parameter 314 [Data Out C1] MSW
N20:14	Value of parameter assigned to Parameter 315 [Data Out C2] LSW
N20:15	Value of parameter assigned to Parameter 315 [Data Out C2] MSW
N20:16	Value of parameter assigned to Parameter 316 [Data Out D1] LSW
N20:17	Value of parameter assigned to Parameter 316 [Data Out D1] MSW
N20:18	Value of parameter assigned to Parameter 317 [Data Out D2] LSW
N20:19	Value of parameter assigned to Parameter 317 [Data Out D2] MSW
N20:20	Logic Command (see Appendix D)
N20:21	Reserved
N20:22	Speed Reference
N20:23	Value of parameter assigned to Parameter 300 [Data In A1] LSW
N20:24	Value of parameter assigned to Parameter 300 [Data In A1] MSW
N20:25	Value of parameter assigned to Parameter 301 [Data In A2] LSW
N20:26	Value of parameter assigned to Parameter 301 [Data In A2] MSW
N20:27	Value of parameter assigned to Parameter 302 [Data In B1] LSW
N20:28	Value of parameter assigned to Parameter 302 [Data In B1] MSW
N20:29	Value of parameter assigned to Parameter 303 [Data In B2] LSW
N20:30	Value of parameter assigned to Parameter 303 [Data In B2] MSW
N20:31	Value of parameter assigned to Parameter 304 [Data In C1] LSW
N20:32	Value of parameter assigned to Parameter 304 [Data In C1] MSW
N20:33	Value of parameter assigned to Parameter 305 [Data In C2] LSW
N20:34	Value of parameter assigned to Parameter 305 [Data In C2] MSW
N20:35	Value of parameter assigned to Parameter 306 [Data In D1] LSW
N20:36	Value of parameter assigned to Parameter 306 [Data In D1] MSW
N20:37	Value of parameter assigned to Parameter 307 [Data In D2] LSW
N20:38	Value of parameter assigned to Parameter 307 [Data In D2] MSW

Table 13 - Controller Data Table Addresses for PowerFlex 700S Drives with Phase I Control

Data Table Address	Description
N20:1	Logic Status (see Appendix D)
N20:2	Speed Feedback LSW
N20:3	Speed Feedback MSW
N20:4	Value of parameter assigned to Parameter 724/725 [Data Out A1] LSW
N20:5	Value of parameter assigned to Parameter 724/725 [Data Out A1] MSW
N20:6	Value of parameter assigned to Parameter 726/727 [Data Out A2] LSW
N20:7	Value of parameter assigned to Parameter 726/727 [Data Out A2] MSW
N20:8	Value of parameter assigned to Parameter 728/729 [Data Out B1] LSW
N20:9	Value of parameter assigned to Parameter 728/729 [Data Out B1] MSW
N20:10	Value of parameter assigned to Parameter 730/731 [Data Out B2] LSW
N20:11	Value of parameter assigned to Parameter 730/731 [Data Out B2] MSW
N20:12	Value of parameter assigned to Parameter 732/733 [Data Out C1] LSW
N20:13	Value of parameter assigned to Parameter 732/733 [Data Out C1] MSW
N20:14	Value of parameter assigned to Parameter 734/735 [Data Out C2] LSW
N20:15	Value of parameter assigned to Parameter 734/735 [Data Out C2] MSW
N20:16	Value of parameter assigned to Parameter 736/737 [Data Out D1] LSW
N20:17	Value of parameter assigned to Parameter 736/737 [Data Out D1] MSW
N20:18	Value of parameter assigned to Parameter 738/739 [Data Out D2] LSW
N20:19	Value of parameter assigned to Parameter 738/739 [Data Out D2] MSW
N20:20	Logic Command (see Appendix D)
N20:21	Speed Reference LSW
N20:22	Speed Reference MSW
N20:23	Value of parameter assigned to Parameter 707/708 [Data In A1] LSW
N20:24	Value of parameter assigned to Parameter 707/708 [Data In A1] MSW
N20:25	Value of parameter assigned to Parameter 709/710 [Data In A2] LSW
N20:26	Value of parameter assigned to Parameter 709/710 [Data In A2] MSW
N20:27	Value of parameter assigned to Parameter 711/712 [Data In B1] LSW
N20:28	Value of parameter assigned to Parameter 711/712 [Data In B1] MSW
N20:29	Value of parameter assigned to Parameter 713/714 [Data In B2] LSW
N20:30	Value of parameter assigned to Parameter 713/714 [Data In B2] MSW
N20:31	Value of parameter assigned to Parameter 715/716 [Data In C1] LSW
N20:32	Value of parameter assigned to Parameter 715/716 [Data In C1] MSW
N20:33	Value of parameter assigned to Parameter 717/718 [Data In C2] LSW
N20:34	Value of parameter assigned to Parameter 717/718 [Data In C2] MSW
N20:35	Value of parameter assigned to Parameter 719/720 [Data In D1] LSW
N20:36	Value of parameter assigned to Parameter 719/720 [Data In D1] MSW
N20:37	Value of parameter assigned to Parameter 721/722 [Data In D2] LSW
N20:38	Value of parameter assigned to Parameter 721/722 [Data In D2] MSW

Table 14 - Controller Data Table Addresses for PowerFlex 700S Drives with Phase II Control

Data Table Address	Description
N20:1	Logic Status (see Appendix D)
N20:2	Speed Feedback LSW
N20:3	Speed Feedback MSW
N20:4	Value of parameter assigned to Parameter 660 [DPI Data Out A1] LSW
N20:5	Value of parameter assigned to Parameter 660 [DPI Data Out A1] MSW
N20:6	Value of parameter assigned to Parameter 661 [DPI Data Out A2] LSW
N20:7	Value of parameter assigned to Parameter 661 [DPI Data Out A2] MSW
N20:8	Value of parameter assigned to Parameter 662 [DPI Data Out B1] LSW
N20:9	Value of parameter assigned to Parameter 662 [DPI Data Out B1] MSW
N20:10	Value of parameter assigned to Parameter 663 [DPI Data Out B2] LSW
N20:11	Value of parameter assigned to Parameter 663 [DPI Data Out B2] MSW
N20:12	Value of parameter assigned to Parameter 664 [DPI Data Out C1] LSW
N20:13	Value of parameter assigned to Parameter 664 [DPI Data Out C1] MSW
N20:14	Value of parameter assigned to Parameter 665 [DPI Data Out C2] LSW
N20:15	Value of parameter assigned to Parameter 665 [DPI Data Out C2] MSW
N20:16	Value of parameter assigned to Parameter 666 [DPI Data Out D1] LSW
N20:17	Value of parameter assigned to Parameter 666 [DPI Data Out D1] MSW
N20:18	Value of parameter assigned to Parameter 667 [DPI Data Out D2] LSW
N20:19	Value of parameter assigned to Parameter 667 [DPI Data Out D2] MSW
N20:20	Logic Command (see Appendix D)
N20:21	Speed Reference LSW
N20:22	Speed Reference MSW
N20:23	Value of parameter assigned to Parameter 651 [DPI Data In A1] LSW
N20:24	Value of parameter assigned to Parameter 651 [DPI Data In A1] MSW
N20:25	Value of parameter assigned to Parameter 652 [DPI Data In A2] LSW
N20:26	Value of parameter assigned to Parameter 652 [DPI Data In A2] MSW
N20:27	Value of parameter assigned to Parameter 653 [DPI Data In B1] LSW
N20:28	Value of parameter assigned to Parameter 653 [DPI Data In B1] MSW
N20:29	Value of parameter assigned to Parameter 654 [DPI Data In B2] LSW
N20:30	Value of parameter assigned to Parameter 654 [DPI Data In B2] MSW
N20:31	Value of parameter assigned to Parameter 655 [DPI Data In C1] LSW
N20:32	Value of parameter assigned to Parameter 655 [DPI Data In C1] MSW
N20:33	Value of parameter assigned to Parameter 656 [DPI Data In C2] LSW
N20:34	Value of parameter assigned to Parameter 656 [DPI Data In C2] MSW
N20:35	Value of parameter assigned to Parameter 657 [DPI Data In D1] LSW
N20:36	Value of parameter assigned to Parameter 657 [DPI Data In D1] MSW
N20:37	Value of parameter assigned to Parameter 658 [DPI Data In D2] LSW
N20:38	Value of parameter assigned to Parameter 658 [DPI Data In D2] MSW

You can use the controller data table addresses to directly control and monitor the drive without creating any ladder logic program. However, if you intend to use Human Machine Interface devices (PanelView, and so forth) to operate the drive and view its status, you will need to create descriptive controller data table addresses (Table 15 and Table 16) and a ladder logic program that will pass that data to the data table addresses used for messaging.

Table 15 - Controller and Program Data Table Address Descriptions for Example Logic Status/Feedback Ladder Logic Program

Description	Controller Data Table Address
Drive Ready	N20:1/0
Drive Active	N20:1/1
Actual Direction (XIO)	N20:1/3
Actual Direction (XIC)	N20:1/3
Drive Faulted	N20:1/7
Drive At Speed	N20:1/8
Speed Feedback	N20:3

Description	Program Data Table Address
Status Ready	B3:1/0
Status Active	B3:1/1
Status Forward	B3:1/3
Status Reverse	B3:1/4
Status Faulted	B3:1/7
Status At Speed	B3:1/8
Speed Feedback	B30:3

Table 16 - Program and Controller Data Table Address Descriptions for Example Logic Command/Reference Ladder Logic Program

Description	Program Data Table Address
Command Stop	B3:20/0
Command Start	B3:20/1
Command Jog	B3:20/2
Command Clear Faults	B3:20/3
Command Forward Reverse (XIO)	B3:20/4
Command Forward Reverse (XIC)	B3:20/4
Speed Reference	N30:22

Description	Controller Data Table Address
Drive Stop	N20:20/0
Drive Start	N20:20/1
Drive Jog	N20:20/2
Drive Clear Faults	N20:20/3
Drive Forward	N20:20/4
Drive Reverse	N20:20/5
Speed Reference	N20:22

An example ladder logic program that uses these descriptive controller data table addresses and passes their data to the descriptive program data table addresses is shown in Figure 30, Figure 31, Figure 32, and Figure 33.

Figure 30 - MicroLogix 1100/1400 Example Ladder Logic Program for Logic Status

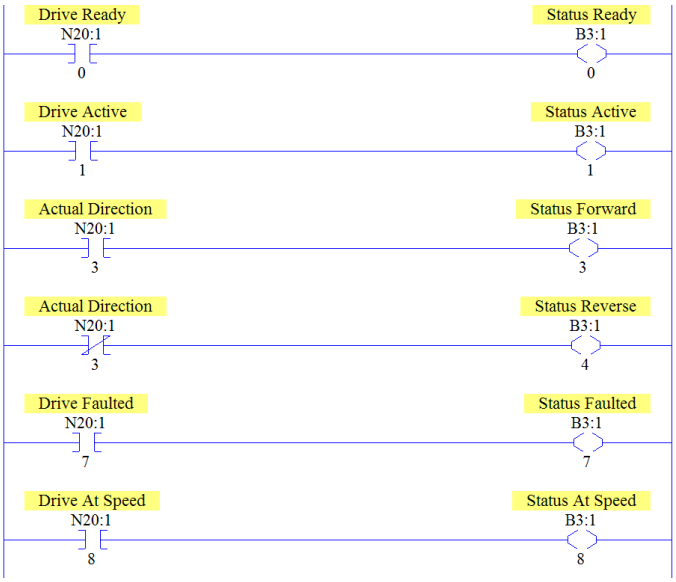

PowerFlex 70 Drives

Figure 31 - MicroLogix 1100/1400 Example Ladder Logic Program for Speed Feedback

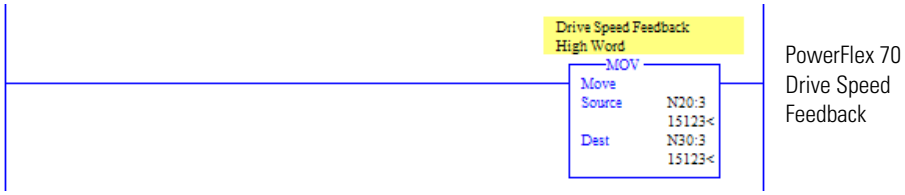

Figure 32 - MicroLogix 1100/1400 Example Ladder Logic Program for Logic Command

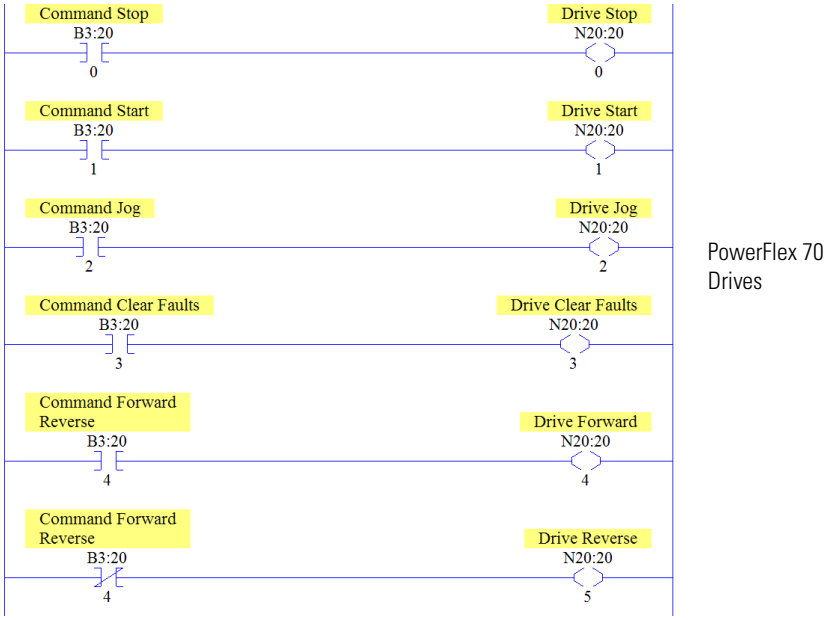

Figure 33 - MicroLogix 1100/1400 Example Ladder Logic Program for Speed Reference

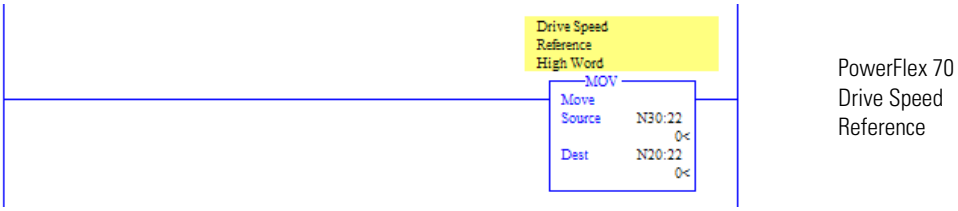

Using Explicit Messaging

This chapter provides information and examples that explain how to use Explicit Messaging to configure and monitor the adapter and connected PowerFlex 7-Class drive or SMC.

Topic	Page
About Explicit Messaging	106
Performing Explicit Messages	106
ControlLogix Controller Examples	108
MicroLogix 1100/1400 Controller Examples	124

ATTENTION: Risk of injury or equipment damage exists. The examples in this publication are intended solely for purposes of example. There are many variables and requirements with any application. Rockwell Automation, Inc. does not assume responsibility or liability (to include intellectual property liability) for actual use of the examples shown in this publication.

ATTENTION: Risk of equipment damage exists. If Explicit Messages are programmed to write parameter data to Nonvolatile Storage (NVS) frequently, the NVS will quickly exceed its life cycle and cause the drive to malfunction. Do not create a program that frequently uses Explicit Messages to write parameter data to NVS. Datalinks do not write to NVS and should be used for frequently changed parameters.

See Chapter 5 for information about the I/O Image, using Logic Command/Status, Reference/Feedback, and Datalinks.

About Explicit Messaging

Explicit Messaging is used to transfer data that does not require continuous updates. With Explicit Messaging, you can configure and monitor a slave device's parameters on the network.

Important: When an explicit message is performed, by default no connection is made since it is an 'unconnected' message. When timing of the message transaction is important, you can create a dedicated message connection between the controller and drive by checking the 'Connected' box on the Communications tab message configuration screen during message setup. These message connections are in addition to the I/O connection. However, the trade off for more message connections is decreased network performance. If your application cannot tolerate this, do not check the 'Connected' box, which is recommended.

Important: PowerFlex 7-Class drives have explicit messaging limitations. Table 17 shows the EtherNet/IP Object Class code compatibilities for these drives.

Table 17 - Explicit Messaging Class Code Compatibility with Drives

EtherNet/IP Object Class Code	PowerFlex 7-Class Drives	Explicit Messaging Function
Parameter Object 0x0F	Yes	Single parameter reads/writes
DPI Parameter Object 0x93	Yes	Single and scattered parameter reads/writes

Performing Explicit Messages

There are five basic events in the Explicit Messaging process. The details of each step will vary depending on the type of controller being used. See the documentation for your controller.

Important: There must be a request message and a response message for all Explicit Messages, whether you are reading or writing data.

Figure 34 - Explicit Message Process

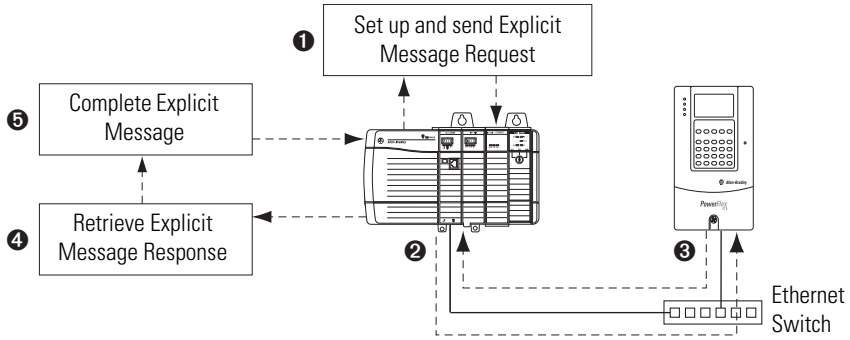

Event	Description
❶	You format the required data and set up the ladder logic program to send an Explicit Message request to the scanner or bridge module (download).
❷	The scanner or bridge module transmits the Explicit Message Request to the slave device over the network.
❸	The slave device transmits the Explicit Message Response back to the scanner. The data is stored in the scanner buffer.
❹	The controller retrieves the Explicit Message Response from the scanner's buffer (upload).
❺	The Explicit Message is complete.

For information on the maximum number of Explicit Messages that can be executed at a time, see the documentation for the scanner or bridge and/or controller that is being used.

ControlLogix Controller Examples

TIP To display the Message Configuration screen in RSLogix 5000 software, add a message instruction (MSG), create a new tag for the message (Properties: Base tag type, MESSAGE data type, controller scope), and click the ... button in the message instruction.

For supported classes, instances, and attributes, see Appendix C, EtherNet/IP Objects.

Explicit Messaging Using RSLogix 5000 Software, Version 15.00 or Later

ControlLogix Controller Example Ladder Logic Program to Read a Single Parameter

A Parameter Read message is used to read a single parameter. This read message example reads the value of parameter 003 - [Output Current] in a PowerFlex 7-Class drive.

Table 18 - Example Controller Tags to Read a Single Parameter

Operand	Controller Tags for Single Read Message	Data Type
XIC	Execute_Single_Read_Message	BOOL
MSG	Single_Read_Message	MESSAGE

Figure 35 - Example Ladder Logic to Read a Single Parameter

ControlLogix Controller – Formatting a Message to Read a Single Parameter, RSLogix 5000 Software, Version 15.00 or Later

Figure 36 - Parameter Read Single Message Configuration Screens

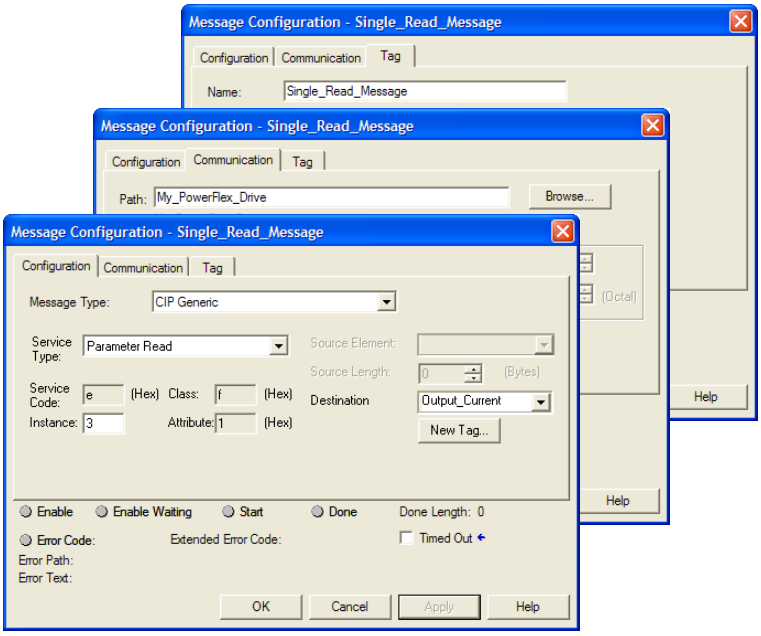

The following table identifies the data that is required in each box to configure a message to read a single parameter.

Configuration Tab	Example Value	Description
Message Type	CIP Generic	Used to access the Parameter Object in the adapter.
Service Type (1)	Parameter Read	This service is used to read a parameter value.
Service Code (1)	e (Hex.)	Code for the requested service.
Class	f (Hex.)	Class ID for the DPI Parameter Object.
Instance (2)	3 (Dec.)	Instance number is the same as parameter number.
Attribute	1 (Hex.)	Attribute number for the Parameter Value attribute.
Destination	Output_Current (4)	The tag where the data that is read is stored.
Communication Tab	**Example Value**	**Description**
Path (3)	My_PowerFlex_Drive	The path is the route that the message will follow.
Tag Tab	**Example Value**	**Description**
Name	Single_Read_Message	The name for the message.

(1) The default setting for Service Type is 'Custom', enabling entry of a Service Code not available from the Service Type pull-down menu. When choosing a Service Type other than 'Custom' from the pull-down menu, an appropriate Hex. value is automatically assigned to the Service Code box which is dimmed (unavailable).

(2) Only drive parameters (Port 0) can be read using Parameter Object Class code 0x0F. To read a parameter of a peripheral in another port, use DPI Parameter Object Class code 0x93 (see page 121).

(3) Click **Browse** to find the path, or type in the name of the device listed in the I/O Configuration folder.

(4) In this example, Output Current is a 32-bit parameter requiring the Data Type field to be set to 'DINT' when creating the controller tag. If the parameter being read is a 16-bit parameter, the tag Data Type field must be set to 'INT'. When using a PowerFlex 700S drive, Output Current is a floating point parameter requiring the Data Type field to be set to 'REAL' when creating the controller tag. See the drive documentation to determine the size of the parameter and its data type (16-bit or 32-bit integer or REAL).

ControlLogix Controller Example Ladder Logic Program to Write a Single Parameter, RSLogix 5000 Software, Version 15.00 or Later

A Parameter Write message is used to write to a single parameter. This write message example writes a value to parameter 140 - [Accel Time 1] in a PowerFlex 7-Class drive.

Table 19 - Example Controller Tags to Write a Single Parameter

Operand	Controller Tags for Single Write Message	Data Type
XIC	Execute_Single_Write_Message	BOOL
MSG	Single_Write_Message	MESSAGE

Figure 37 - Example Ladder Logic to Write a Single Parameter

Important: If the explicit message single write must be written continuously, use DPI Parameter Object Class code 0x93. This writes to RAM—not NVS (EEPROM) memory. This example single write message using Class code F writes to NVS. Over time, continuous writes will exceed the EEPROM life cycle and cause the drive to malfunction.

ControlLogix Controller – Formatting a Message to Write a Single Parameter, RSLogix 5000 Software, Version 15.00 or Later

Figure 38 - Parameter Write Single Message Configuration Screens

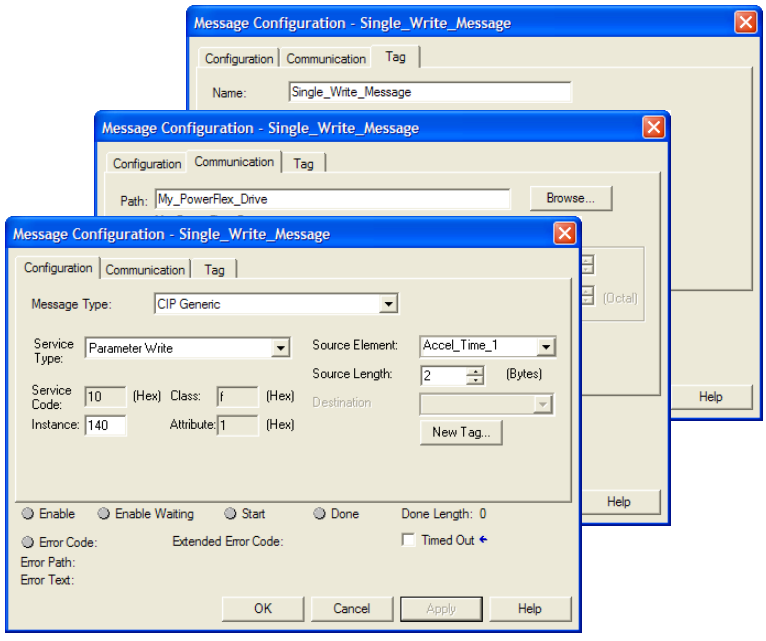

The following table identifies the data that is required in each box to configure a message to write a single parameter.

Configuration Tab	Example Value	Description
Message Type	CIP Generic	Used to access the Parameter Object in the adapter.
Service Type (1)	Parameter Write	This service is used to write a parameter value.
Service Code (1)	10 (Hex.)	Code for the requested service.
Class	f (Hex.)	Class ID for the DPI Parameter Object.
Instance (2)	140 (Dec.)	Instance number is the same as parameter number.
Attribute	1 (Hex.)	Attribute number for the Parameter Value attribute.
Source Element	Accel_Time_1 (4)	Name of the tag for any service data to be sent from the scanner or bridge to the adapter/drive.
Source Length	2 (4)	Number of bytes of service data to be sent in the message.
Communication Tab	**Example Value**	**Description**
Path (3)	My_PowerFlex_Drive	The path is the route that the message will follow.
Tag Tab	**Example Value**	**Description**
Name	Single_Write_Message	The name for the message.

(1) The default setting for Service Type is 'Custom', enabling entry of a Service Code not available from the Service Type pull-down menu. When choosing a Service Type other than 'Custom' from the pull-down menu, an appropriate Hex. value is automatically assigned to the Service Code box which is dimmed (unavailable).

(2) Only drive parameters (Port 0) can be written to using Parameter Object Class code 0x0F. To write to a parameter of a peripheral in another port, use DPI Parameter Object Class code 0x93 (see page 123).

(3) Click **Browse** to find the path, or type in the name of the device listed in the I/O Configuration folder.

(4) In this example, Accel Time 1 is a 16-bit parameter requiring the tag Data Type field to be set to 'INT' when creating the controller tag. If the parameter being written to is a 32-bit parameter, the tag Data Type field must be set to 'DINT'. Also, the Source Length field on the Message Configuration screen must correspond to the selected Data Type in bytes (for example, 4 bytes for a DINT or a REAL). When using a PowerFlex 700S drive, Accel Time 1 is a floating point number requiring the Data Type field to be set to 'REAL' when creating the controller tag. See the drive documentation to determine the size of the parameter and its data type (16-bit or 32-bit integer or REAL).

ControlLogix Controller Example Ladder Logic Program to Read Multiple Parameters, RSLogix 5000 Software, All Versions

A Scattered Read message is used to read the values of multiple parameters. Up to 22 parameters can be read. This read message example reads the values of these five parameters.

PowerFlex 7-Class Drive
• Parameter 001 - [Output Freq] • Parameter 003 - [Output Current] • Parameter 006 - [Output Voltage] • Parameter 012 - [DC Bus Voltage] • Parameter 017 - [Analog In1 Value]

See DPI Parameter Object on page 198 (Class code 0x93) for parameter numbering.

Important: See Table 17 on page 106 for limitations of PowerFlex 7-Class drives when using Class code 0x93.

Table 20 - Example Controller Tags to Read Multiple Parameters

Operand	Controller Tags for Read Multiple Message	Data Type
XIC	Execute_Scattered_Read_Message	BOOL
MSG	Scattered_Read_Message	MESSAGE

Figure 39 - Example Ladder Logic to Read Multiple Parameters

ControlLogix Controller – Formatting a Message to Read Multiple Parameters, RSLogix 5000 Software, All Versions

Figure 40 - Scattered Read Message Configuration Screens

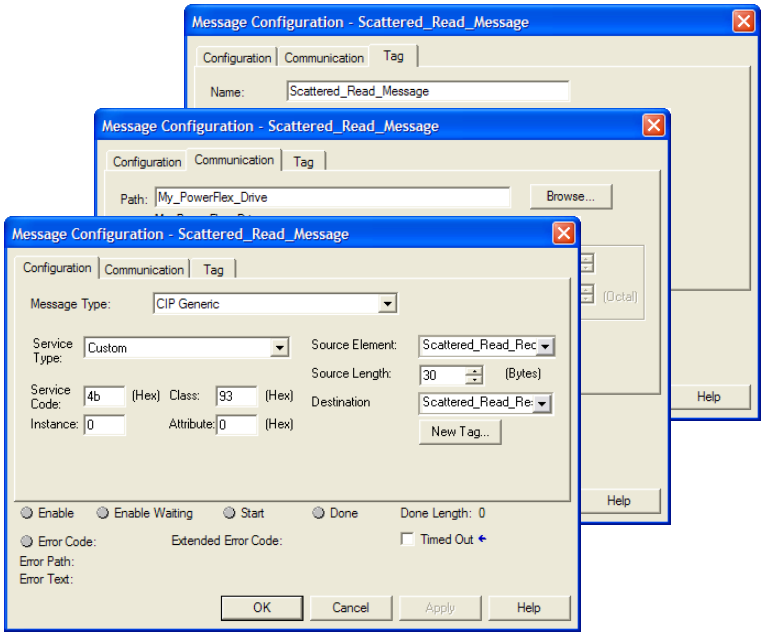

The following table identifies the data that is required in each box to configure a message to read multiple parameters.

Configuration Tab	Example Value	Description
Message Type	CIP Generic	Used to access Parameter Object in the adapter.
Service Type (1)	Custom	Required for scattered messages.
Service Code (1)	4b (Hex.)	Code for the requested service.
Class	93 or 9F (Hex.) (3)	Class ID for the DPI Parameter Object.
Instance	0 (Dec.)	Required for scattered messages.
Attribute	0 (Hex.)	Required for scattered messages.
Source Element	Scattered_Read_Request (4)	Name of the tag for any service data to be sent from scanner or bridge to the adapter/drive.
Source Length	30 (4)	Number of bytes of service data to be sent in the message.
Destination	Scattered_Read_Response	The tag where the data that is read is stored.
Communication Tab	**Example Value**	**Description**
Path (2)	My_PowerFlex_Drive	The path is the route that the message will follow.
Tag Tab	**Example Value**	**Description**
Name	Scattered_Read_Message	The name for the message.

(1) The default setting for Service Type is 'Custom', enabling entry of a Service Code not available from the Service Type pull-down menu. When choosing a Service Type other than 'Custom' from the pull-down menu, an appropriate Hex. value is automatically assigned to the Service Code box which is dimmed (unavailable).

(2) Click **Browse** to find the path, or type in the name of the device listed in the I/O Configuration folder.

(3) See Table 17 on page 106 for limitations of PowerFlex 7-Class drives when using DPI Parameter Object Class code 0x93 for explicit messaging.

(4) In this example, we are reading five parameters. Each parameter being read requires an array of three INT registers. Therefore, a controller tag was created with its Data Type field set to 'INT[15]'. Also, the Source Length field on the Message Configuration screen must correspond to the selected Data Type in bytes (for this example, 30 bytes for an INT[15] array). Scattered read messages always assume that every parameter being read is a 32-bit parameter, regardless of its actual size. Maximum length is 132 bytes or 66 words which equates to 22 parameters. For parameter numbering, see DPI Parameter Object on page 198 (Class code 0x93).

ControlLogix Controller Example Scattered Read Request Data

In this message example, we use the data structure in Figure 41 or Figure in the source tag named Scattered_Read_Request to read these five parameters.

PowerFlex 7-Class Drive
• Parameter 001 - [Output Freq] • Parameter 003 - [Output Current] • Parameter 006 - [Output Voltage] • Parameter 012 - [DC Bus Voltage] • Parameter 017 - [Analog In1 Value]

See DPI Parameter Object on page 198 (Class code 0x93) for parameter numbering.

Figure 41 - Example Scattered Read Request Data for PowerFlex 7-Class Drive

Name	Value	Data Type	Description
Scattered_Read_Request	{...}	INT[15]	
Scattered_Read_Request[0]	1	INT	Parameter Number (decimal)
Scattered_Read_Request[1]	0	INT	Pad Word
Scattered_Read_Request[2]	0	INT	Pad Word
Scattered_Read_Request[3]	3	INT	Parameter Number (decimal)
Scattered_Read_Request[4]	0	INT	Pad Word
Scattered_Read_Request[5]	0	INT	Pad Word
Scattered_Read_Request[6]	6	INT	Parameter Number (decimal)
Scattered_Read_Request[7]	0	INT	Pad Word
Scattered_Read_Request[8]	0	INT	Pad Word
Scattered_Read_Request[9]	12	INT	Parameter Number (decimal)
Scattered_Read_Request[10]	0	INT	Pad Word
Scattered_Read_Request[11]	0	INT	Pad Word
Scattered_Read_Request[12]	17	INT	Parameter Number (decimal)
Scattered_Read_Request[13]	0	INT	Pad Word
Scattered_Read_Request[14]	0	INT	Pad Word

ControlLogix Controller Example Scattered Read Response Data

The Scattered Read Request message reads the multiple parameters and returns their values to the destination tag (Scattered_Read_Response). Figure 42 or Figure shows the parameter values.

Figure 42 - Example Scattered Read Response Data for PowerFlex 7-Class Drive

Name	Value	Data Type	Description
Scattered_Read_Response	{...}	INT[15]	
Scattered_Read_Response[0]	1	INT	Parameter Number (decimal)
Scattered_Read_Response[1]	325	INT	Parameter Value LSW
Scattered_Read_Response[2]	0	INT	Parameter Value MSW
Scattered_Read_Response[3]	3	INT	Parameter Number (decimal)
Scattered_Read_Response[4]	1	INT	Parameter Value LSW
Scattered_Read_Response[5]	0	INT	Parameter Value MSW
Scattered_Read_Response[6]	6	INT	Parameter Number (decimal)
Scattered_Read_Response[7]	1187	INT	Parameter Value LSW
Scattered_Read_Response[8]	0	INT	Parameter Value MSW
Scattered_Read_Response[9]	12	INT	Parameter Number (decimal)
Scattered_Read_Response[10]	3292	INT	Parameter Value LSW
Scattered_Read_Response[11]	0	INT	Parameter Value MSW
Scattered_Read_Response[12]	17	INT	Parameter Number (decimal)
Scattered_Read_Response[13]	8318	INT	Parameter Value LSW
Scattered_Read_Response[14]	0	INT	Parameter Value MSW

In this message example, the parameters have the following values.

PowerFlex 7-Class Drive Parameter	Read Value
1 - [Output Freq]	32.5 Hz
3 - [Output Current]	0.01 Amp
6 - [Output Voltage]	118.7 VAC
12 - [DC Bus Voltage]	329.2 VDC
17 - [Analog In2 Value]	8.318 mA

ControlLogix Controller Example Ladder Logic Program to Write Multiple Parameters, RSLogix 5000 Software, All Versions

A Scattered Write message is used to write to multiple parameters. This write message example writes the following values to these five parameters.

PowerFlex 7-Class Drive Parameter	Write Value
141 - [Accel Time 2]	11.1 Sec.
143 - [Decel Time 2]	22.2 Sec.
105 - [Preset Speed 5]	33.3 Hz.
106 - [Preset Speed 6]	44.4 Hz.
107 - [Preset Speed 7]	55.5 Hz.

See DPI Parameter Object on page 198 (Class code 0x93) for parameter numbering.

Important: See Table 17 on page 106 for limitations of PowerFlex 7-Class drives when using Class code 0x93 for explicit messaging.

Table 21 - Example Controller Tags to Write Multiple Parameters

Operand	Controller Tags for Write Multiple Message	Data Type
XIC	Execute_Scattered_Write_Message	BOOL
MSG	Scattered_Write_Message	MESSAGE

Figure 43 - Example Ladder Logic to Write Multiple Parameters

Important: If the explicit message scattered write must be written continuously, then use a separate explicit message single write for each parameter using DPI Parameter Object Class code 0x93 and attribute A (10 decimal; see page 123). Attribute A writes to RAM—not NVS (EEPROM) memory. This example scattered write message using attribute 0 writes to NVS. Over time, continuous writes will exceed the EEPROM life cycle and cause the drive to malfunction.

ControlLogix Controller – Formatting a Message to Write Multiple Parameters, RSLogix 5000 Software, All Versions

Figure 44 - Scattered Write Multiple Message Configuration Screens

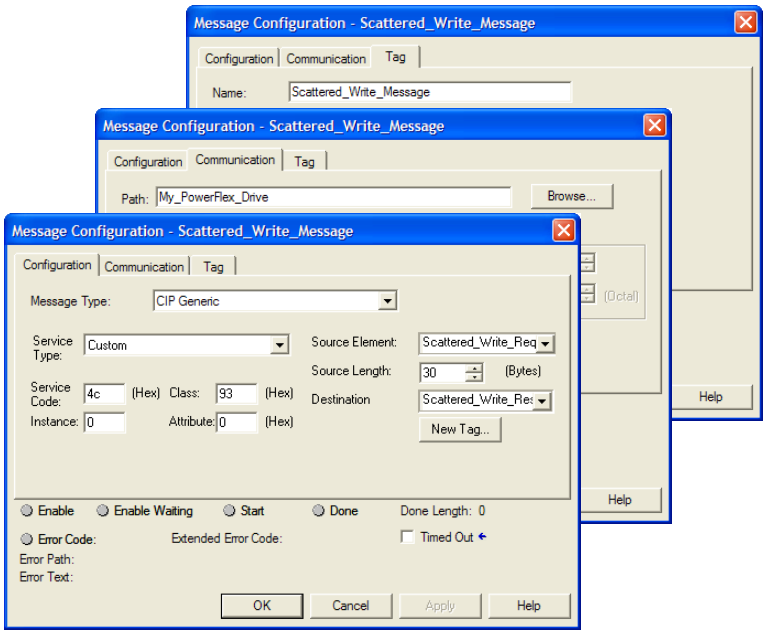

The following table identifies the data that is required in each box to configure a message to write multiple parameters.

Configuration Tab	Example Value	Description
Message Type	CIP Generic	Used to access Parameter Object in the adapter.
Service Type (1)	Custom	Required for scattered messages.
Service Code (1)	4c (Hex.)	Code for the requested service.
Class	93 or 9F (Hex.) (3)	Class ID for the DPI Parameter Object.
Instance	0 (Dec.)	Required for scattered messages.
Attribute	0 (Hex.)	Required for scattered messages.
Source Element	Scattered_Write_Request (4)	Name of the tag for any service data to be sent from scanner or bridge to the adapter/drive.
Source Length	30 (4)	Number of bytes of service data to be sent in the message.
Destination	Scattered_Write_Response	The tag where the data that is read is stored.
Communication Tab	**Example Value**	**Description**
Path (2)	My_PowerFlex_Drive	The path is the route that the message will follow.
Tag Tab	**Example Value**	**Description**
Name	Scattered_Write_Message	The name for the message.

(1) The default setting for Service Type is 'Custom', enabling entry of a Service Code not available from the Service Type pull-down menu. When choosing a Service Type other than 'Custom' from the pull-down menu, an appropriate Hex. value is automatically assigned to the Service Code box which is dimmed (unavailable).

(2) Click **Browse** to find the path, or type in the name of the device listed in the I/O Configuration folder.

(3) See Table 17 on page 106 for limitations of PowerFlex 7-Class drives when using DPI Parameter Object Class code 0x93 for explicit messaging.

(4) In this example, we are writing to five parameters. Each parameter being written to requires an array of three INT registers. Therefore, a controller tag was created with its Data Type field set to 'INT[15]'. Also, the Source Length field on the Message Configuration screen must correspond to the selected Data Type in bytes (for this example, 30 bytes for an INT[15] array). Scattered write messages always assume that every parameter being written to is a 32-bit parameter, regardless of its actual size. Maximum length is 132 bytes or 66 words which equates to 22 parameters. For parameter numbering, see DPI Parameter Object on page 198 (Class code 0x93).

ControlLogix Controller Example Scattered Write Request Data

In this message example, we use the data structure in Figure 45 or Figure in the source tag (Scattered_Write_Request) to write new values to these parameters.

PowerFlex 7-Class Drive Parameter	Write Value
141 - [Accel Time 2]	11.1 Sec.
143 - [Decel Time 2]	22.2 Sec.
105 - [Preset Speed 5]	33.3 Hz.
106 - [Preset Speed 6]	44.4 Hz.
107 - [Preset Speed 7]	55.5 Hz.

See DPI Parameter Object on page 198 (Class code 0x93) for parameter numbering.

Figure 45 shows the parameter values.

Figure 45 - Example Scattered Write Request Data for PowerFlex 7-Class Drive

Name	Value	Data Type	Description
Scattered_Write_Request	{...}	INT[15]	
Scattered_Write_Request[0]	141	INT	Parameter Number (decimal)
Scattered_Write_Request[1]	111	INT	Parameter Value LSW
Scattered_Write_Request[2]	0	INT	Parameter Value MSW
Scattered_Write_Request[3]	143	INT	Parameter Number (decimal)
Scattered_Write_Request[4]	222	INT	Parameter Value LSW
Scattered_Write_Request[5]	0	INT	Parameter Value MSW
Scattered_Write_Request[6]	105	INT	Parameter Number (decimal)
Scattered_Write_Request[7]	333	INT	Parameter Value LSW
Scattered_Write_Request[8]	0	INT	Parameter Value MSW
Scattered_Write_Request[9]	106	INT	Parameter Number (decimal)
Scattered_Write_Request[10]	444	INT	Parameter Value LSW
Scattered_Write_Request[11]	0	INT	Parameter Value MSW
Scattered_Write_Request[12]	107	INT	Parameter Number (decimal)
Scattered_Write_Request[13]	555	INT	Parameter Value LSW
Scattered_Write_Request[14]	0	INT	Parameter Value MSW

ControlLogix Controller Example Scattered Write Response Data

The results of the message appear in the destination tag named Scattered_Write_Response (Figure 46). Values of '0' indicate no errors occurred.

Figure 46 - Example Scattered Write Response Data for PowerFlex 7-Class Drive

Name	Value	Data Type	Description
Scattered_Write_Response	{...}	INT[15]	
Scattered_Write_Response[0]	141	INT	Parameter Number (decimal)
Scattered_Write_Response[1]	0	INT	Pad Word or Error Code
Scattered_Write_Response[2]	0	INT	Pad Word
Scattered_Write_Response[3]	143	INT	Parameter Number (decimal)
Scattered_Write_Response[4]	0	INT	Pad Word or Error Code
Scattered_Write_Response[5]	0	INT	Pad Word
Scattered_Write_Response[6]	105	INT	Parameter Number (decimal)
Scattered_Write_Response[7]	0	INT	Pad Word or Error Code
Scattered_Write_Response[8]	0	INT	Pad Word
Scattered_Write_Response[9]	106	INT	Parameter Number (decimal)
Scattered_Write_Response[10]	0	INT	Pad Word or Error Code
Scattered_Write_Response[11]	0	INT	Pad Word
Scattered_Write_Response[12]	107	INT	Parameter Number (decimal)
Scattered_Write_Response[13]	0	INT	Pad Word or Error Code
Scattered_Write_Response[14]	0	INT	Pad Word

ControlLogix Controller – Explanation of Request and Response Data for Read/Write Multiple Messaging, RSLogix 5000 Software, All Versions

The data structures in Figure 47 and Figure 48 use 16-bit words and can accommodate up to 22 parameters in a single message. In the Response Message, a parameter number with the high bit set indicates that the associated parameter value field contains an error code (parameter number in response data will be negative).

Important: See Table 17 on page 106 for limitations of PowerFlex 7-Class drives when using Class code 0x93 for explicit messaging.

Figure 47 - Data Structures for Scattered Read Messages

	Request (Source Data)		Response (Destination Data)
Word 0	Parameter Number	Word 0	Parameter Number
1	Pad Word	1	Parameter Value LSW
2	Pad Word	2	Parameter Value MSW
3	Parameter Number	3	Parameter Number
4	Pad Word	4	Parameter Value LSW
5	Pad Word	5	Parameter Value MSW
6	Parameter Number	6	Parameter Number
7	Pad Word	7	Parameter Value LSW
8	Pad Word	8	Parameter Value MSW
9	Parameter Number	9	Parameter Number
10	Pad Word	10	Parameter Value LSW
11	Pad Word	11	Parameter Value MSW
12	Parameter Number	12	Parameter Number
13	Pad Word	13	Parameter Value LSW
14	Pad Word	14	Parameter Value MSW
⋮		⋮	
63	Parameter Number	63	Parameter Number
64	Pad Word	64	Parameter Value LSW
65	Pad Word	65	Parameter Value MSW

Figure 48 - Data Structures for Scattered Write Messages

	Request (Source Data)		Response (Destination Data)
Word 0	Parameter Number	Word 0	Parameter Number
1	Parameter Value LSW	1	Pad Word
2	Parameter Value MSW	2	Pad Word
3	Parameter Number	3	Parameter Number
4	Parameter Value LSW	4	Pad Word
5	Parameter Value MSW	5	Pad Word
6	Parameter Number	6	Parameter Number
7	Parameter Value LSW	7	Pad Word
8	Parameter Value MSW	8	Pad Word
9	Parameter Number	9	Parameter Number
10	Parameter Value LSW	10	Pad Word
11	Parameter Value MSW	11	Pad Word
12	Parameter Number	12	Parameter Number
13	Parameter Value LSW	13	Pad Word
14	Parameter Value MSW	14	Pad Word
⋮		⋮	
63	Parameter Number	63	Parameter Number
64	Parameter Value LSW	64	Pad Word
65	Parameter Value MSW	65	Pad Word

Explicit Messaging Using RSLogix 5000 Software, All Versions

ControlLogix Controller Example Ladder Logic Program to Read a Single Parameter

A Get Attribute Single message is used to read a single parameter. This read message example reads the value of parameter 003 - [Output Current] in a PowerFlex 7-Class drive.

Important: See Table 17 on page 106 for limitations of PowerFlex 7-Class drives when using DPI Parameter Object Class code 0x93 for explicit messaging.

Table 22 - Example Controller Tags to Read a Single Parameter

Operand	Controller Tags for Single Read Message	Data Type
XIC	Execute_Single_Read_Message	BOOL
MSG	Single_Read_Message	MESSAGE

Figure 49 - Example Ladder Logic to Read a Single Parameter

ControlLogix Controller – Formatting a Message to Read a Single Parameter, RSLogix 5000 Software, All Versions

Figure 50 - Get Attribute Single Message Configuration Screens

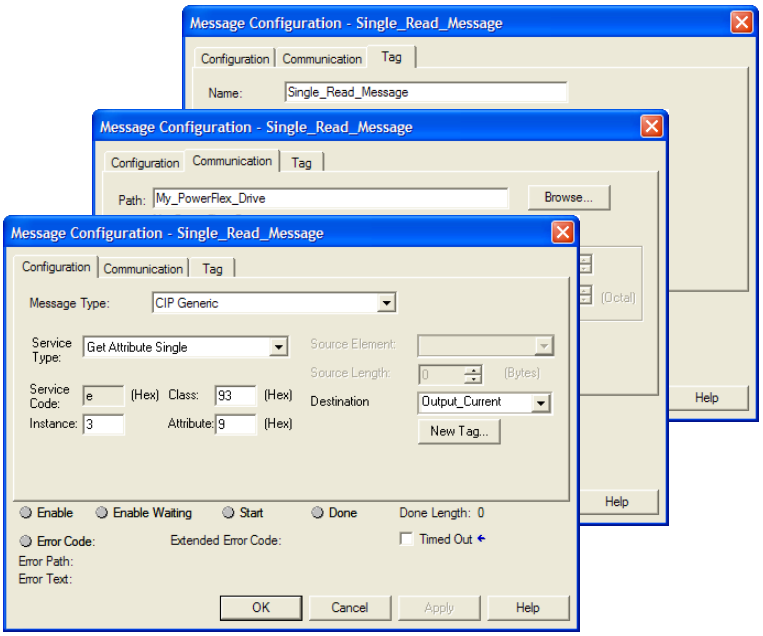

The following table identifies the data that is required in each box to configure a message to read a single parameter.

Configuration Tab	Example Value	Description
Message Type	CIP Generic	Used to access the Parameter Object in the adapter.
Service Type (1)	Get Attribute Single	This service is used to read a parameter value.
Service Code (1)	e (Hex.)	Code for the requested service.
Class	93 or 9F (Hex.) (4)	Class ID for the DPI Parameter Object.
Instance (2)	3 (Dec.)	Instance number is the same as parameter number.
Attribute	9 (Hex.)	Attribute number for the Parameter Value attribute.
Destination	Output_Current (5)	The tag where the data that is read is stored.
Communication Tab	**Example Value**	**Description**
Path (3)	My_PowerFlex_Drive	The path is the route that the message will follow.
Tag Tab	**Example Value**	**Description**
Name	Single_Read_Message	The name for the message.

(1) The default setting for Service Type is 'Custom', enabling entry of a Service Code not available from the Service Type pull-down menu. When choosing a Service Type other than 'Custom' from the pull-down menu, an appropriate Hex. value is automatically assigned to the Service Code box which is dimmed (unavailable).

(2) The instance is the parameter number in the drive (Port 0). For example, to read parameter 4 of a peripheral in Port 5 of an SMC-50 controller, the instance would be 21504 + 4 = 21508. See DPI Parameter Object on page 198 (Class code 0x93) to determine the instance number.

(3) Click **Browse** to find the path, or type in the name of the device listed in the I/O Configuration folder.

(4) See Table 17 on page 106 for limitations of PowerFlex 7-Class drives when using DPI Parameter Object Class code 0x93 for explicit messaging.

(5) In this example, Output Current is a 32-bit parameter requiring the Data Type field to be set to 'DINT' when creating the controller tag. If the parameter being read is a 16-bit parameter, the tag Data Type field must be set to 'INT'. When using a PowerFlex 700S drive, Output Current is a floating point number requiring the Data Type field to be set to 'REAL' when the creating controller tag. See the drive documentation to determine the size of the parameter and its data type (16-bit or 32-bit integer or REAL).

ControlLogix Controller Example Ladder Logic Program to Write a Single Parameter, RSLogix 5000 Software, All Versions

A Set Attribute Single message is used to write to a single parameter. This write message example writes a value to parameter 140 - [Accel Time 1] in a PowerFlex 7-Class drive.

Table 23 - Example Controller Tags to Write a Single Parameter

Operand	Controller Tags for Single Write Message	Data Type
XIC	Execute_Single_Write_Message	BOOL
MSG	Single_Write_Message	MESSAGE

Figure 51 - Example Ladder Logic to Write a Single Parameter

ControlLogix Controller – Formatting a Message to Write a Single Parameter, RSLogix 5000 Software, All Versions

Figure 52 - Set Attribute Single Message Configuration Screens

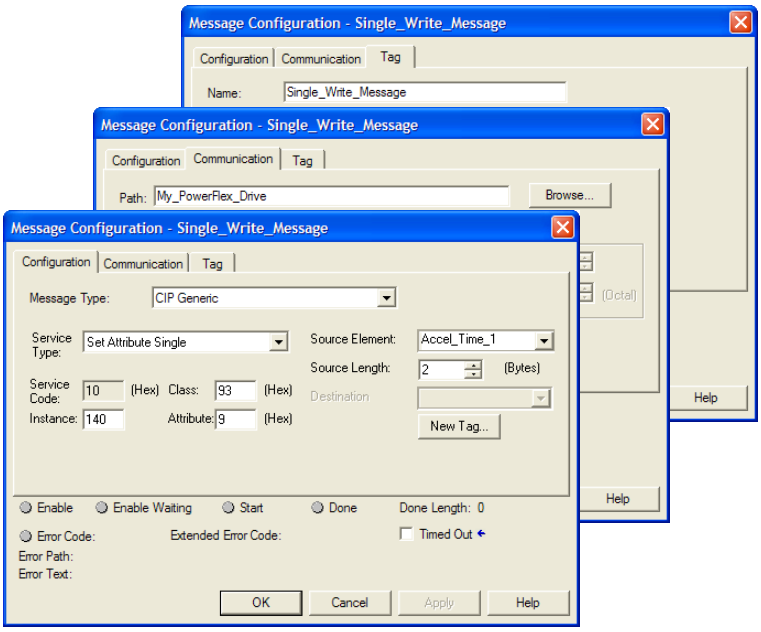

The following table identifies the data that is required in each box to configure a message to write a single parameter.

Configuration Tab	Example Value	Description
Message Type	CIP Generic	Used to access the Parameter Object in the adapter.
Service Type (1)	Set Attribute Single	This service is used to write a parameter value.
Service Code (1)	10 (Hex.)	Code for the requested service.
Class	93 or 9F (Hex.) (5)	Class ID for the DPI Parameter Object.
Instance (2)	140 (Dec.)	Instance number is the same as parameter number.
Attribute (3)	9 or A (Hex.)	Attribute number for the Parameter Value attribute.
Source Element	Accel_Time_1 (6)	Name of the tag for any service data to be sent from the scanner or bridge to the adapter/drive.
Source Length	2 (6)	Number of bytes of service data to be sent in the message.
Communication Tab	**Example Value**	**Description**
Path (4)	My_PowerFlex_Drive	The path is the route that the message will follow.
Tag Tab	**Example Value**	**Description**
Name	Single_Write_Message	The name for the message.

(1) The default setting for Service Type is 'Custom', enabling entry of a Service Code not available from the Service Type pull-down menu. When choosing a Service Type other than 'Custom' from the pull-down menu, an appropriate Hex. value is automatically assigned to the Service Code box which is dimmed (unavailable).

(2) The instance is the parameter number in the drive (Port 0). For example, to write to parameter 4 of a peripheral in Port 7 of an SMC-50 controller, the instance would be 21504 + 4 = 21508. See DPI Parameter Object on page 198 (Class code 0x93) to determine the instance number.

(3) Setting the Attribute value to '9' will write the parameter value to the drive's Nonvolatile Storage (EEPROM) memory, which retains the parameter value even after the drive is power cycled. **Important:** When set to '9', the EEPROM may quickly exceed its life cycle and cause the drive to malfunction. Setting the Attribute value to 'A' (10 decimal) will write the parameter value to temporary memory, which deletes the parameter value after the drive is power cycled. When frequent write messages are required, we recommend using the 'A' (10 decimal) setting.

(4) Click **Browse** to find the path, or type in the name of the device listed in the I/O Configuration folder.

(5) See Table 17 on page 106 for limitations of PowerFlex 7-Class drives when using DPI Parameter Object Class code 0x93 for explicit messaging.

(6) In this example, Accel Time 1 is a 16-bit parameter requiring the tag Data Type field to be set to 'INT' when creating the controller tag. If the parameter being written to is a 32-bit parameter, the tag Data Type field must be set to 'DINT'. Also, the Source Length field on the Message Configuration screen must correspond to the selected Data Type in bytes (for example, 4 bytes for a DINT or a REAL). When using a PowerFlex 700S drive, Accel Time 1 is a floating point number requiring the Data Type field to be set to 'REAL' when creating the controller tag. See the drive documentation to determine the size of the parameter and its data type (16-bit or 32-bit integer or REAL).

ControlLogix Controller Example Ladder Logic Program to Read or Write Multiple Parameters, RSLogix 5000 Software, All Versions

Because the example ladder logic rungs, configuration screens, and request/response data to read or write multiple parameters using RSLogix 5000 software, all versions, are identical to those for RSLogix 5000 software, version 15.00 or later, see the information contained on page 112 through page 119 for complete details.

MicroLogix 1100/1400 Controller Examples

When using RSLogix 500 software, version 7.10 and earlier, explicit messaging must be performed using the PCCC N-File method. For RSLogix 500 software, version 7.20 and later, the CIP messaging method has been added along with the PCCC N-File method. However, it is recommended to use the CIP method because it is easier to use and understand. For this reason, only instructions for the CIP method are provided.

The CIP messaging method provides two ways to perform explicit messaging:

- Read/Write Parameter Service simplifies setup by requiring less data to be entered in message configuration screens. However, the Read/Write Parameter Service can only be used to perform single parameter read or single parameter write explicit messages. (Multiple parameter reads or writes must be performed using the Generic Get/Set Attribute Service described below.)

Important: When performing a Write Parameter message, the data will always be written to the drive's Nonvolatile Storage (NVS). Continuous NVS writes may damage the drive's EEPROM. If continuous writes are necessary, use the Generic Set Attribute Single Service and attribute A (10 decimal; see page 133).

- Generic Get/Set Attribute Service requires more setup data to be entered in message configuration screens, but can be used to perform single parameter read or write and multiple parameter read or write explicit messages. Also, the Generic Set Attribute Service offers the choice of writing the data to the drive's Nonvolatile Storage (NVS) or the drive's Random Access Memory (RAM; for Generic Set Attribute Single service only, see page 133). Note that when selecting the data to be written to RAM, the data will be lost if the drive loses power.

For supported classes, instances, and attributes, see Appendix C, EtherNet/IP Objects.

MicroLogix 1100/1400 Controller Explicit Messaging Using the Read/Write Parameter Service

MicroLogix 1100/1400 Controller Example Ladder Logic Program to Read a Single Parameter

A Read Parameter message is used to read a single parameter. This read message example reads the value of parameter 003 - [Output Current] in a PowerFlex 7-Class drive.

Figure 53 - Example Ladder Logic to Read a Single Parameter

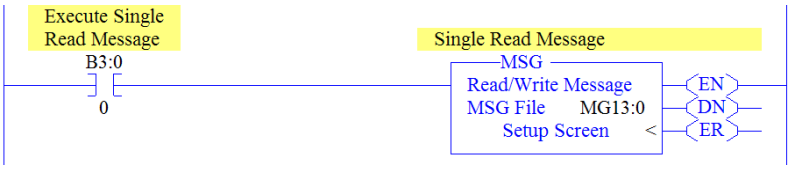

MicroLogix 1100/1400 Controller – Formatting a Message to Read a Single Parameter Using Read/Write Parameter Service

Figure 54 - Read Parameter Message Configuration Screens

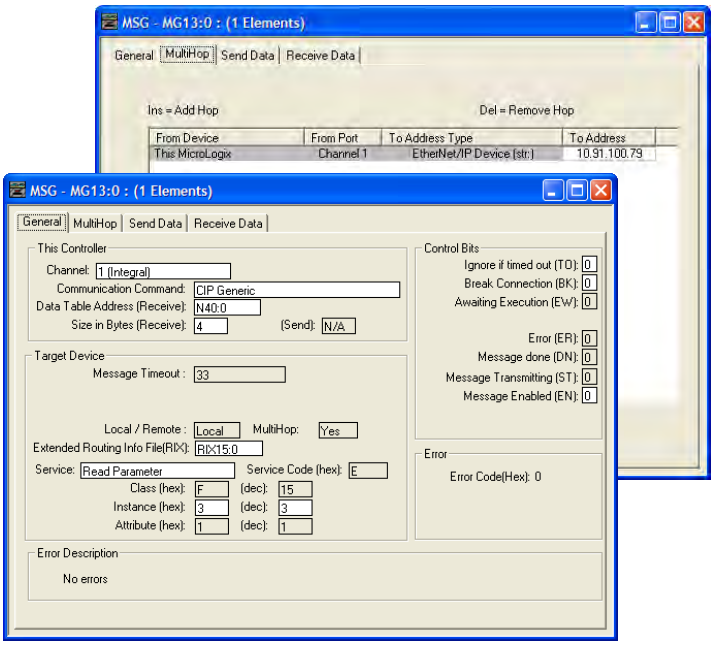

The following table identifies the data that is required in each box to configure a message to read a single parameter.

General Tab	Example Value	Description
Channel	1	Controller port to which the network is connected.
Comm… Command	CIP Generic	Used to access the Parameter Object in the adapter.
Data Table Address	N40:0	An unused controller data table address containing the message instruction. This address is the starting word of the destination file.
Size in Bytes	4 (3)	Number of bytes to be transferred. Each byte size is an 8-bit integer.
Extended Routing…	RIX15:0	An unused routing information file for the controller.
Service (1)	Read Parameter	Code for the requested service.
Instance (2)	3 (Dec.)	Instance number is the same as the parameter number.
MultiHop Tab	**Example Value**	**Description**
To Address	10.91.100.79	IP address of the adapter connected to the drive.

(1) The default setting for Service is 'Custom', enabling entry of a Service Code not available from the Service pull-down menu. When choosing a Service other than 'Custom' from the pull-down menu, an appropriate Hex. value is automatically assigned to the Service Code box which is dimmed (unavailable).

(2) Only drive parameters (Port 0) can be read using Parameter Object Class code 0x0F. To read a parameter of a peripheral in another port, use DPI Parameter Object Class code 0x93 (see page 130).

(3) In this example, Output Current is a 32-bit parameter. If the parameter being read is a 16-bit parameter, the Size in Bytes would be set to 2. When the parameter being read is a 32-bit REAL (floating point) data type, the size in bytes would be set to 4. See the drive documentation to determine the size of the parameter and its data type (16-bit or 32-bit integer or REAL).

MicroLogix 1100/1400 Controller Example Read Single Response Data

In this message example, we use the data table address in Figure 55 to store the response value (0.13 amps) that was read from drive parameter 003 - [Output Current]. To determine the data type for the parameter and its required scaling, see the specific drive documentation.

Figure 55 - Example Read Single Response Data File

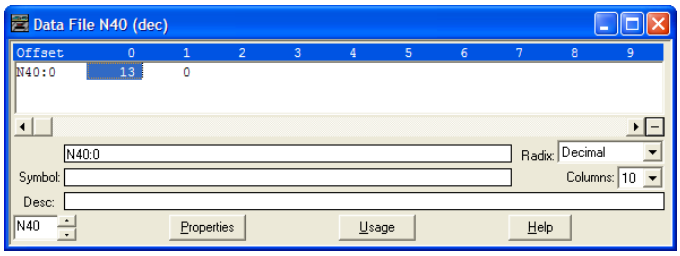

Figure 56 shows example ladder logic to correctly format the three possible data types for read messages in the MicroLogix 1100/1400 controller.

Figure 56 - Example Ladder Logic to Format Parameter Data Types for Reads

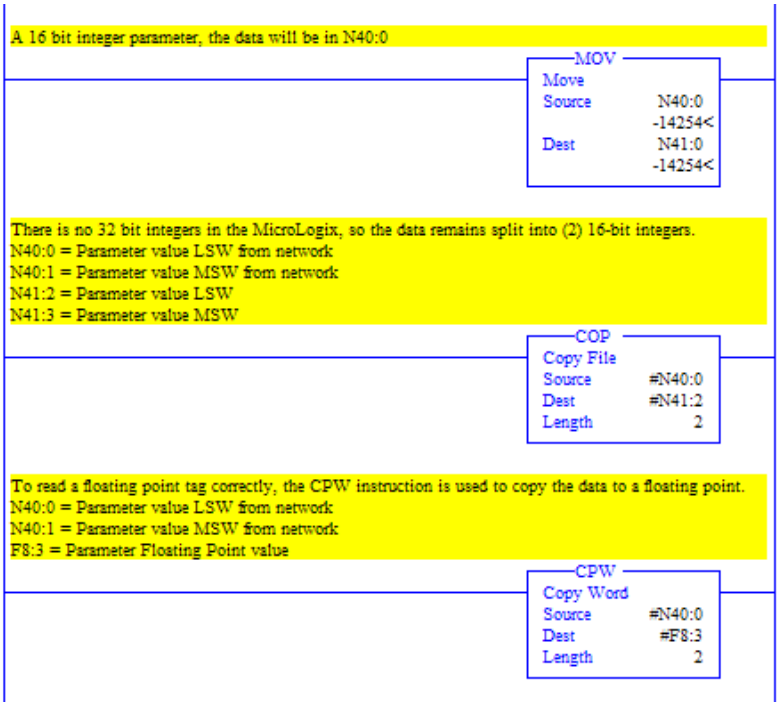

For 16-bit Integer Parameters – All PowerFlex 7-Class

For 32-bit Integer Parameters – All PowerFlex 7-Class

For 32-bit REAL (Floating Point) Parameters – PowerFlex 700S

MicroLogix 1100/1400 Controller Example Ladder Logic Program to Write a Single Parameter Using Read/Write Parameter Service

A Write Parameter message is used to write to a single parameter. This write message example writes a value to parameter 140 - [Accel Time 1] in a PowerFlex 7-Class drive.

Figure 57 - Example Ladder Logic to Write a Single Parameter

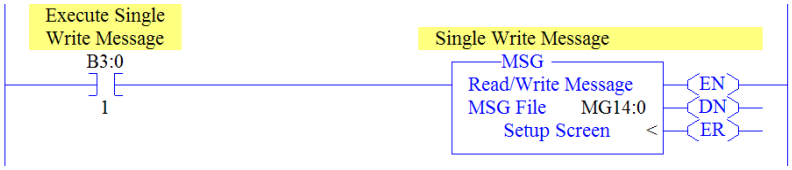

Important: If the explicit message single write must be written continuously, use DPI Parameter Object Class code 0x93 and attribute A (10 decimal; see page 133). This writes to RAM—not NVS (EEPROM) memory. This example single write message using Class code F writes to NVS. Over time, continuous writes will exceed the EEPROM life cycle and cause the drive to malfunction.

MicroLogix 1100/1400 Controller – Formatting a Message to Write a Single Parameter Using Read/Write Parameter Service

Figure 58 - Write Parameter Message Configuration Screens

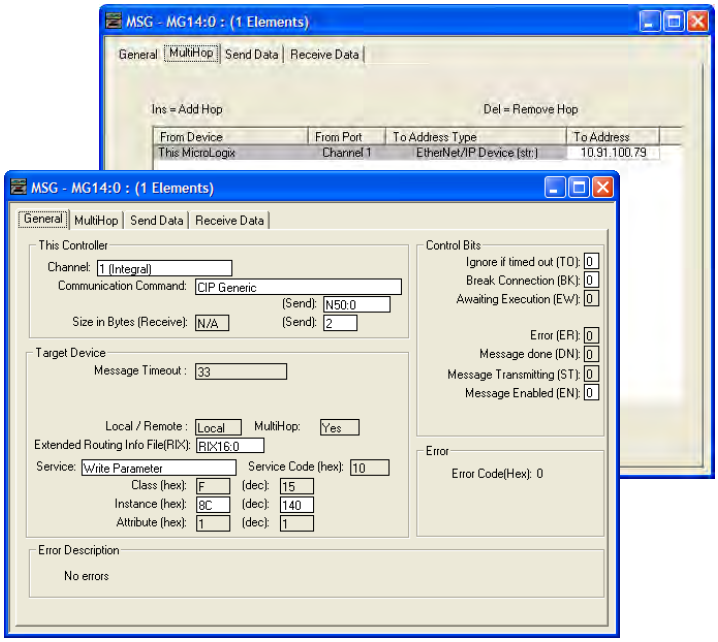

The following table identifies the data that is required in each box to configure a message to write a single parameter.

General Tab	Example Value	Description
Channel	1	Controller port to which the network is connected.
Comm... Command	CIP Generic	Used to access the Parameter Object in the adapter.
Data Table Address	N50:0	An unused controller data table address containing the message instruction. This address is the starting word of the destination file.
Size in Bytes	2 (3)	Number of bytes to be transferred. Each byte size is an 8-bit integer.
Extended Routing...	RIX16:0	An unused routing information file for the controller.
Service (1)	Write Parameter	Code for the requested service.
Instance (2)	140 (Dec.)	Instance number is the same as the parameter number.
MultiHop Tab	**Example Value**	**Description**
To Address	10.91.100.79	IP address of the adapter connected to the drive.

(1) The default setting for Service is 'Custom', enabling entry of a Service Code not available from the Service pull-down menu. When choosing a Service other than 'Custom' from the pull-down menu, an appropriate Hex. value is automatically assigned to the Service Code box which is dimmed (unavailable).

(2) Only drive parameters (Port 0) can be written to using Parameter Object Class code 0x0F. To write to a parameter of a peripheral in another port, use DPI Parameter Object Class code 0x93 (see page 133).

(3) In this example, Accel Time 1 is a 16-bit parameter. If the parameter being written to is a 32-bit parameter, the Size in Bytes would be set to 4. When the parameter being written to is a 32-bit REAL (floating point) data type, the size in bytes would be set to 4. See the drive documentation to determine the size of the parameter and its data type (16-bit or 32-bit integer or REAL).

MicroLogix 1100/1400 Controller Example Write Single Request Data

In this message example, we use the data table address in Figure 59 to store the request value (10.0 sec.) that was written to drive parameter 140 - [Accel Time 1]. To determine the data type for the parameter and its required scaling, see the specific drive documentation.

Figure 59 - Example Write Single Request Data File

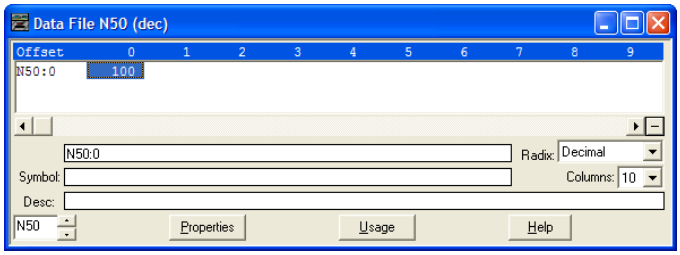

Figure 60 shows example ladder logic to correctly format the three possible data types for write messages in the MicroLogix 1100/1400 controller.

Figure 60 - Example Ladder Logic to Format Parameter Data Types for Writes

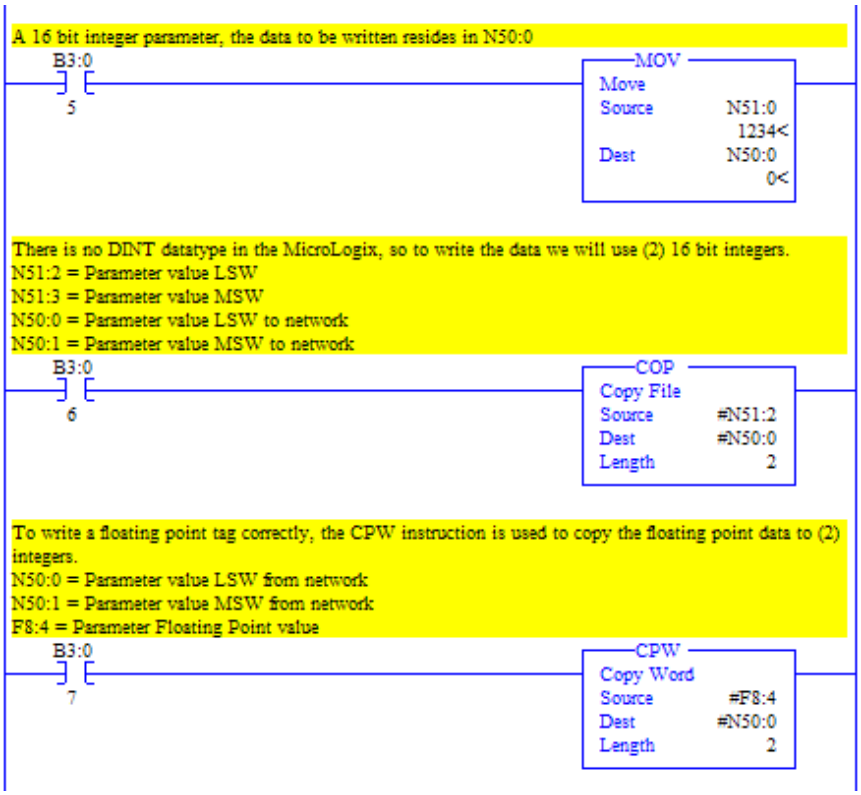

For 16-bit Integer Parameters – All PowerFlex 7-Class Drives

For 32-bit Integer Parameters – All PowerFlex 7-Class Drives

For 32-bit REAL (Floating Point) Parameters – PowerFlex 700S Drives

MicroLogix 1100/1400 Controller Explicit Messaging Using the Generic Get/Set Attribute Service

MicroLogix 1100/1400 Controller Example Ladder Logic Program to Read a Single Parameter

A Generic Get Attribute Single message is used to read a single parameter. This read message example reads the value of parameter 003 - [Output Current] in a PowerFlex 7-Class drive.

Important: See Table 17 on page 106 for limitations of PowerFlex 7-Class drives when using Class code 0x93 for explicit messaging.

Figure 61 - Example Ladder Logic to Read a Single Parameter

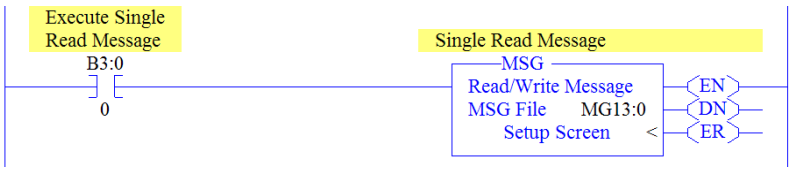

MicroLogix 1100/1400 Controller – Formatting a Message to Read a Single Parameter Using Generic Get/Set Attribute Service

Figure 62 - Generic Get Attribute Single Message Configuration Screens

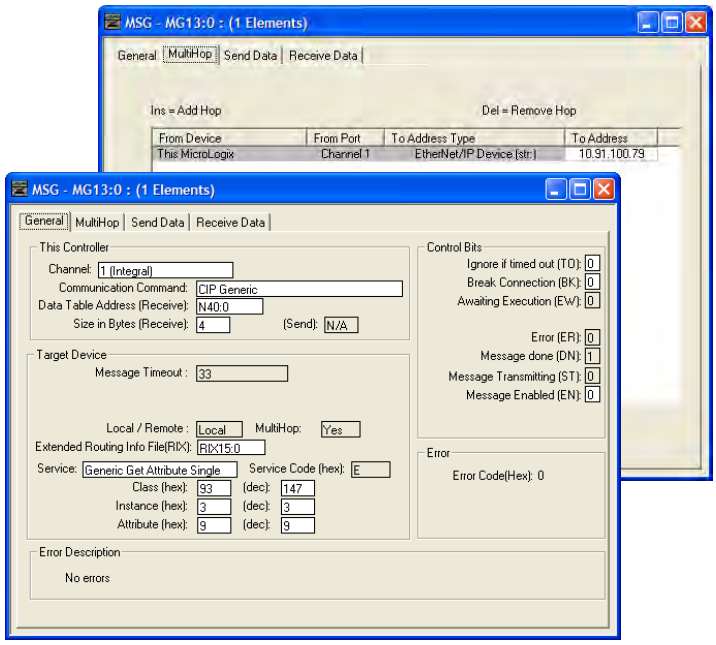

The following table identifies the data that is required in each box to configure a message to read a single parameter.

General Tab	Example Value	Description
Channel	1	Controller port to which the network is connected.
Comm… Command	CIP Generic	Used to access the Parameter Object in the adapter.
Data Table Address	N40:0	An unused controller data table address containing the message instruction. This address is the starting word of the destination file.
Size in Bytes	4 (3)	Number of bytes to be transferred. Each byte size is an 8-bit integer.
Extended Routing…	RIX15:0	An unused routing information file for the controller.
Service (1)	Generic Get Attribute Single	Code for the requested service.
Class	93 or 9F (Hex.) (4)	Class ID for the DPI Parameter Object.
Instance (2)	3 (Dec.)	Instance number is the same as the parameter number.
Attribute	9 (Dec.)	Attribute number for the Parameter Value attribute.
MultiHop Tab	**Example Value**	**Description**
To Address	10.91.100.79	IP address of the adapter connected to the drive.

(1) The default setting for Service is 'Custom', enabling entry of a Service Code not available from the Service pull-down menu. When choosing a Service other than 'Custom' from the pull-down menu, an appropriate Hex. value is automatically assigned to the Service Code box which is dimmed (unavailable).

(2) The instance is the parameter number in the drive (Port 0). For example, to read parameter 4 of a peripheral in Port 7 of an SMC-50 controller, the instance would be 21504 + 4 = 21508. See DPI Parameter Object on page 198 (Class code 0x93) to determine the instance number.

(3) In this example, Output Current is a 32-bit parameter. If the parameter being read is a 16-bit parameter, the Size in Bytes would be set to 2. When the parameter being read is a 32-bit REAL (floating point) data type, the size in bytes would be set to 4. See the drive documentation to determine the size of the parameter and its data type (16-bit or 32-bit integer or REAL).

(4) See Table 17 on page 106 for limitations of PowerFlex 7-Class drives when using DPI Parameter Object Class code 0x93 for explicit messaging.

MicroLogix 1100/1400 Controller Example Get Attribute Single Response Data

In this message example, we use the data table address in Figure 63 to store the response value (0.13 amps) that was read from drive parameter 003 - [Output Current]. To determine the data type for the parameter and its required scaling, see the specific drive documentation.

Figure 63 - Example Get Attribute Single Response Data File

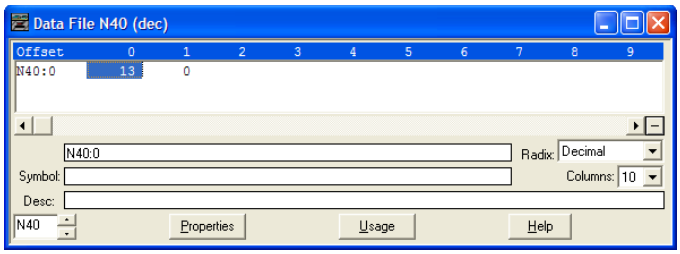

Figure 64 shows example ladder logic to correctly format the three possible data types for read messages in the MicroLogix 1100/1400 controller.

Figure 64 - Example Ladder Logic to Format Parameter Data Types for Gets

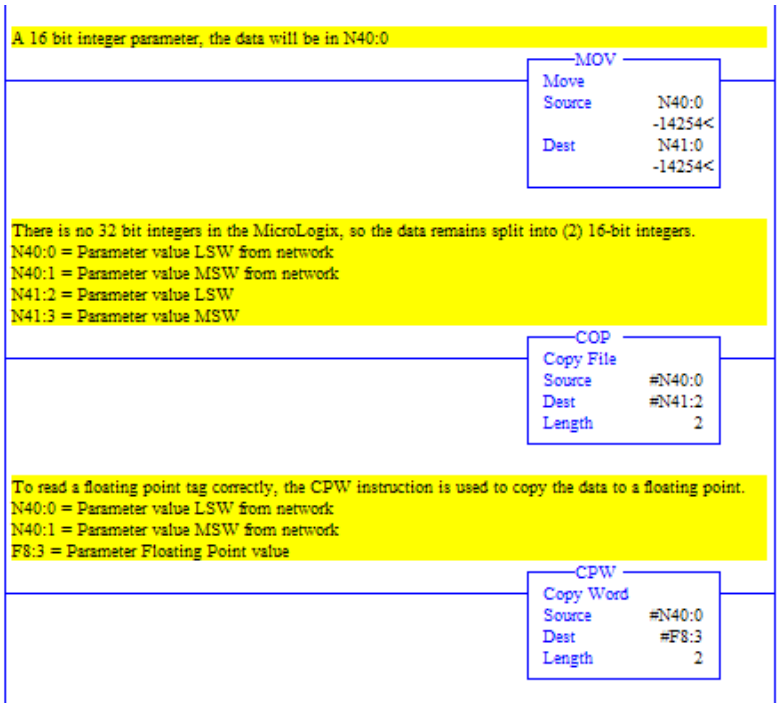

MicroLogix 1100/1400 Controller Example Ladder Logic Program to Write a Single Parameter Using Generic Get/Set Attribute Service

A Generic Set Attribute Single message is used to write to a single parameter. This write message example writes a value to parameter 140 - [Accel Time 1] in a PowerFlex 7-Class drive.

Important: See Table 17 on page 106 for limitations of PowerFlex 7-Class drives when using Class code 0x93 for explicit messaging.

Figure 65 - Example Ladder Logic to Write a Single Parameter

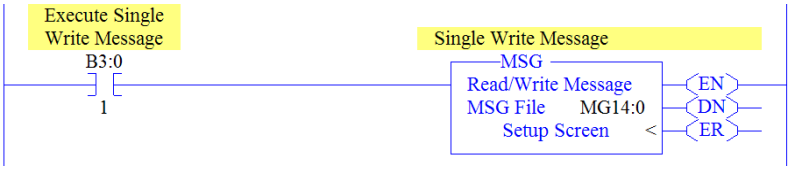

MicroLogix 1100/1400 Controller – Formatting a Message to Write a Single Parameter Using Generic Get/Set Attribute Service

Figure 66 - Generic Set Attribute Single Message Configuration Screens

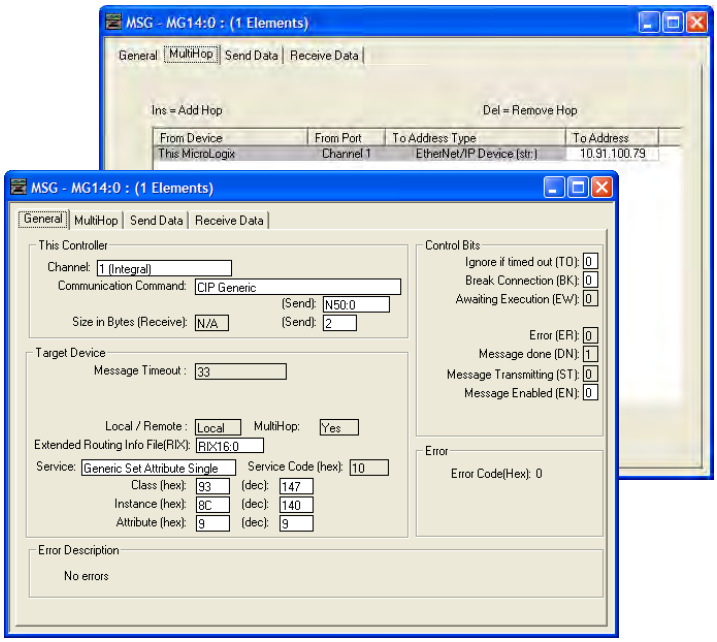

The following table identifies the data that is required in each box to configure a message to write a single parameter.

General Tab	Example Value	Description
Channel	1	Controller port to which the network is connected.
Comm… Command	CIP Generic	Used to access the Parameter Object in the adapter.
Data Table Address	N50:0	An unused controller data table address containing the message instruction. This address is the starting word of the destination file.
Size in Bytes	2 (4)	Number of bytes to be transferred. Each byte size is an 8-bit integer.
Extended Routing…	RIX16:0	An unused routing information file for the controller.
Service (1)	Generic Set Attribute Single	Code for the requested service.
Class	93 or 9F (Hex.) (5)	Class ID for the DPI Parameter Object.
Instance (2)	140 (Dec.)	Instance number is the same as the parameter number.
Attribute (3)	9 or 10 (Dec.)	Attribute number for the Parameter Value attribute.
MultiHop Tab	**Example Value**	**Description**
To Address	10.91.100.79	IP address of the adapter connected to the drive.

(1) The default setting for Service is 'Custom', enabling entry of a Service Code not available from the Service pull-down menu. When choosing a Service other than 'Custom' from the pull-down menu, an appropriate Hex. value is automatically assigned to the Service Code box which is dimmed (unavailable).

(2) The instance is the parameter number in the drive (Port 0). For example, to write to parameter 4 of a peripheral in Port 5 of an SMC-50 controller, the instance would be 21504 + 4 = 21508. See DPI Parameter Object on page 198 (Class code 0x93) to determine the instance number.

(3) Setting the Attribute value to '9' will write the parameter value to the drive's Nonvolatile Storage (EEPROM) memory, which retains the parameter value even after the drive is power cycled. **Important:** When set to '9', the EEPROM may quickly exceed its life cycle and cause the drive to malfunction. Setting the Attribute value to '10' will write the parameter value to temporary memory, which deletes the parameter value after the drive is power cycled. When frequent write messages are required, we recommend using the '10' setting.

(4) In this example, Accel Time 1 is a 16-bit parameter. If the parameter being written to is a 32-bit parameter, the Size in Bytes would be set to 4.

(5) See Table 17 on page 106 for limitations of PowerFlex 7-Class drives when using DPI Parameter Object Class code 0x93 for explicit messaging.

MicroLogix 1100/1400 Controller Example Set Attribute Single Request Data

In this message example, we use the data table address in Figure 67 to store the request value (10.0 sec.) that was written to drive parameter 140 - [Accel Time 1]. To determine the data type for the parameter and its required scaling, see the specific drive documentation.

Figure 67 - Example Set Attribute Single Request Data File

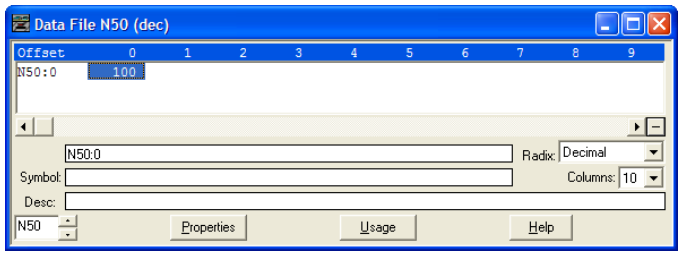

Figure 68 shows example ladder logic to correctly format the three possible data types for write messages in the MicroLogix 1100/1400 controller.

Figure 68 - Example Ladder Logic to Format Parameter Data Types for Sets

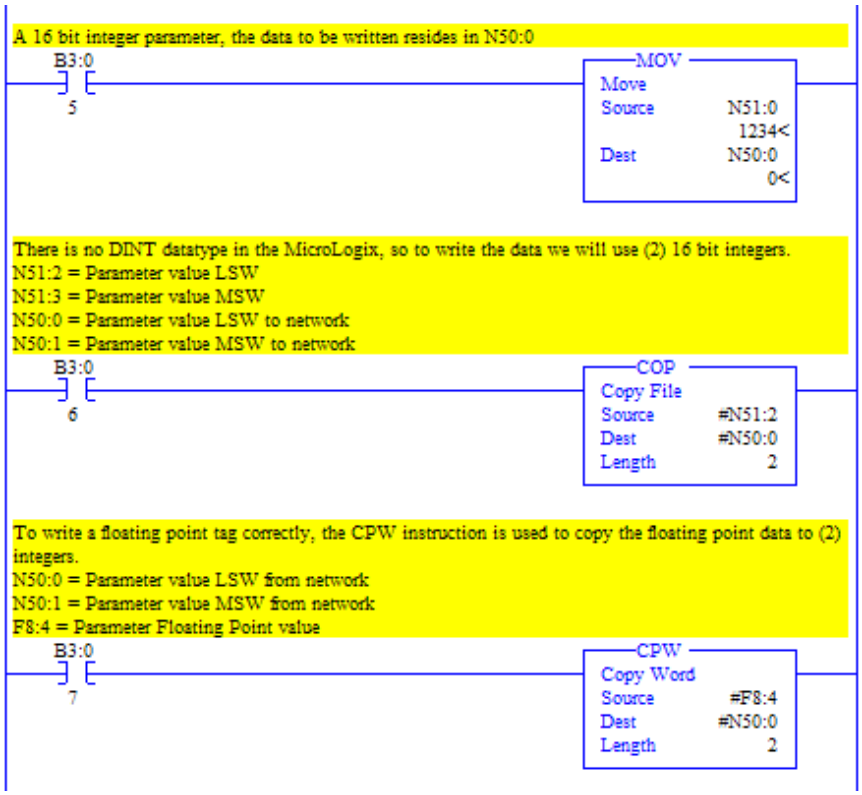

For 16-bit Integer Parameters – All PowerFlex 7-Class Drives

For 32-bit Integer Parameters – All PowerFlex 7-Class Drives

For 32-bit REAL (Floating Point) Parameters – PowerFlex 700S Drives

MicroLogix 1100/1400 Controller Example Ladder Logic Program to Read Multiple Parameters Using Generic Get/Set Attribute Service

A Custom scattered read message is used to read the values of multiple parameters. This read message example reads the values of these five parameters.

PowerFlex 7-Class Drive
• Parameter 001 - [Output Freq] • Parameter 003 - [Output Current] • Parameter 006 - [Output Voltage] • Parameter 012 - [DC Bus Voltage] • Parameter 017 - [Analog In1 Value]

See DPI Parameter Object on page 198 (Class code 0x93) for parameter numbering.

Important: See Table 17 on page 106 for limitations of PowerFlex 7-Class drives when using Class code 0x93 for explicit messaging.

Figure 69 - Example Ladder Logic to Read Multiple Parameters

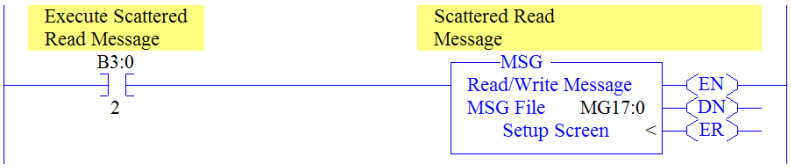

MicroLogix 1100/1400 Controller – Formatting a Message to Read Multiple Parameters Using Generic Get/Set Attribute Service

Figure 70 - Custom Scattered Read Message Configuration Screens

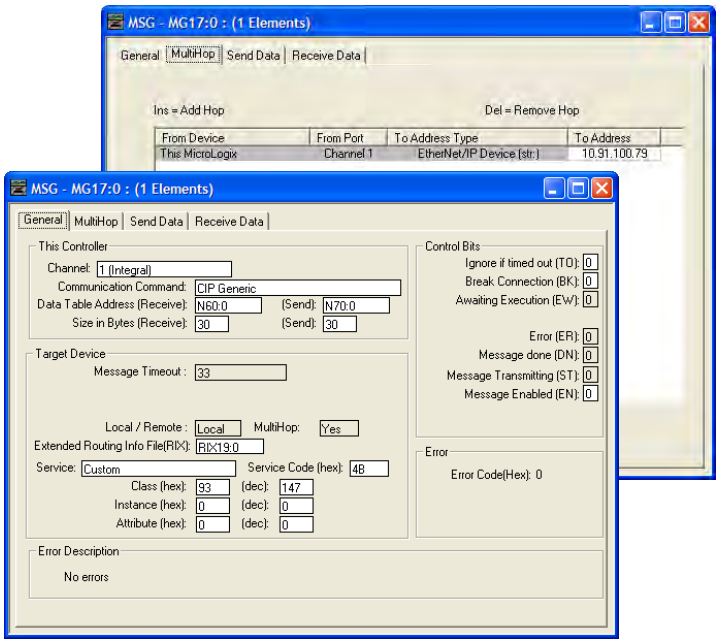

The following table identifies the data that is required in each box to configure a message to read multiple parameters.

General Tab	Example Value	Description
Channel	1	Controller port to which the network is connected.
Comm… Command	CIP Generic	Used to access the Parameter Object in the adapter.
Data Table Address	N60:0	An unused controller data table address containing the message instruction. This address is the starting word of the destination file.
Size in Bytes	30 (2)	Number of bytes to be transferred. Each byte size is an 8-bit integer.
Extended Routing…	RIX19:0	An unused routing information file for the controller.
Service (1)	Custom	Required for scattered messages.
Service Code	4B (Hex.)	Code for the requested service.
Class	93 or 9F (Hex.) (3)	Class ID for the DPI Parameter Object.
Instance	0 (Dec.)	Required for scattered messages.
Attribute	0 (Dec.)	Required for scattered messages.
MultiHop Tab	**Example Value**	**Description**
To Address	10.91.100.79	IP address of the adapter connected to the drive.

(1) The default setting for Service is 'Custom', enabling entry of a Service Code not available from the Service pull-down menu. When choosing a Service other than 'Custom' from the pull-down menu, an appropriate Hex. value is automatically assigned to the Service Code box which is dimmed (unavailable).

(2) In this example, we are reading five parameters. Each parameter being read requires three contiguous 16-bit words. Scattered read messages always assume that every parameter being read is a 32-bit parameter, regardless of its actual size. Therefore, the Size in Bytes must be set to 30. The data structure format is the same as shown on page 141. Maximum length is 66 words (132 bytes), which equates to 22 parameters. For parameter numbering, see DPI Parameter Object on page 198 (Class code 0x93).

(3) See Table 17 on page 106 for limitations of PowerFlex 7-Class drives when using DPI Parameter Object Class code 0x93 for explicit messaging.

MicroLogix 1100/1400 Controller Example Scattered Read Request Data

In this message example, we use the data table addresses in Figure 71 or Figure 71 to store the request values to be read from these drive parameters.

PowerFlex 7-Class Drive
• Parameter 001 - [Output Freq] • Parameter 003 - [Output Current] • Parameter 006 - [Output Voltage] • Parameter 012 - [DC Bus Voltage] • Parameter 017 - [Analog In1 Value]

See DPI Parameter Object on page 198 (Class code 0x93) for parameter numbering.

Figure 71 - Example Scattered Read Request Data File for PowerFlex 7-Class Drive

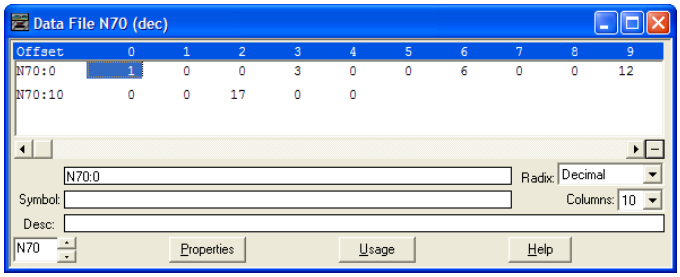

MicroLogix 1100/1400 Controller Example Scattered Read Response Data

In this message example, we use the data table addresses in Figure 72 to store the response values that were read from the requested drive parameters.

Figure 72 - Example Scattered Read Response Data File for PowerFlex 7-Class Drive

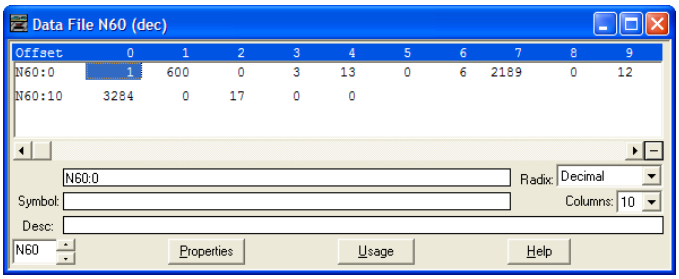

In this example, the parameters have the following values.

PowerFlex 7-Class Drive Parameter	Address	Read Value
1 - [Output Freq]	N60:1	32.5 Hz
3 - [Output Current]	N60:4	0.01 Amp
6 - [Output Voltage]	N60:7	118.7 VAC
12 - [DC Bus Voltage]	N60:10	329.2 VDC
17 - [Analog In2 Value]	N60:13	8.318 mA

MicroLogix 1100/1400 Controller Example Ladder Logic Program to Write Multiple Parameters Using Generic Get/Set Attribute Service

A Custom scattered write message is used to write to multiple parameters. This write message example writes the following values to these five parameters.

PowerFlex 7-Class Drive Parameter	Write Value
141 - [Accel Time 2]	11.1 Sec.
143 - [Decel Time 2]	22.2 Sec.
105 - [Preset Speed 5]	33.3 Hz.
106 - [Preset Speed 6]	44.4 Hz.
107 - [Preset Speed 7]	55.5 Hz.

See DPI Parameter Object on page 198 (Class code 0x93) for parameter numbering.

Important: See Table 17 on page 106 for limitations of PowerFlex 7-Class drives when using Class code 0x93 for explicit messaging.

Figure 73 - Example Ladder Logic to Write Multiple Parameters

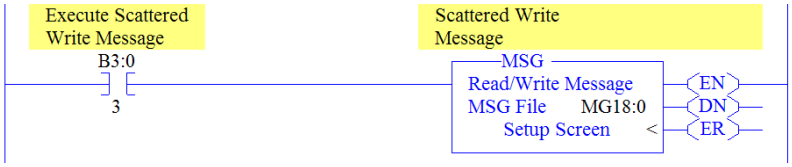

Important: If the explicit message scattered write must be written continuously, then use a separate Generic Set service explicit message single write for each parameter using DPI Parameter Object Class code 0x93 and attribute A (10 decimal; see page 133). Attribute A writes to RAM—not NVS (EEPROM) memory. This example scattered write message using attribute 0 writes to NVS. Over time, continuous writes will exceed the EEPROM life cycle and cause the drive to malfunction.

MicroLogix 1100/1400 Controller – Formatting a Message to Write Multiple Parameters Using Generic Get/Set Attribute Service

Figure 74 - Custom Scattered Write Multiple Message Configuration Screens

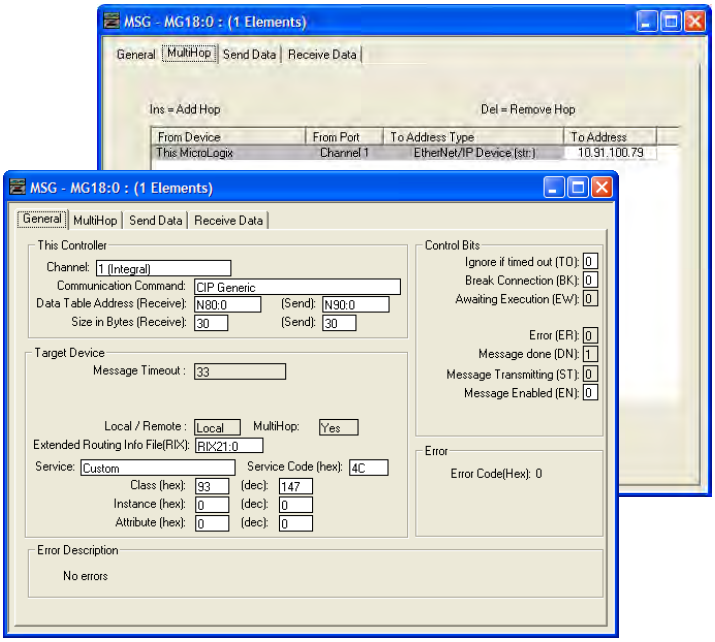

The following table identifies the data that is required in each box to configure a message to write multiple parameters.

General Tab	Example Value	Description
Channel	1	Controller port to which the network is connected.
Comm… Command	CIP Generic	Used to access the Parameter Object in the adapter.
Data Table Address	N80:0	An unused controller data table address containing the message instruction. This address is the starting word of the destination file.
Size in Bytes	30 (2)	Number of bytes to be transferred. Each byte size is an 8-bit integer.
Extended Routing…	RIX21:0	An unused routing information file for the controller.
Service (1)	Custom	Required for scattered messages.
Service Code	4C (Hex.)	Code for the requested service.
Class	93 or 9F (Hex.) (3)	Class ID for the DPI Parameter Object.
Instance	0 (Dec.)	Required for scattered messages.
Attribute	0 (Dec.)	Required for scattered messages.
MultiHop Tab	**Example Value**	**Description**
To Address	10.91.100.79	IP address of the adapter connected to the drive.

(1) The default setting for Service is 'Custom', enabling entry of a Service Code not available from the Service pull-down menu. When choosing a Service other than 'Custom' from the pull-down menu, an appropriate Hex. value is automatically assigned to the Service Code box which is dimmed (unavailable).

(2) In this example, we are writing to five parameters. Each parameter being written to requires three contiguous 16-bit words. Scattered write messages always assume that every parameter being written to is a 32-bit parameter, regardless of its actual size. Therefore, the Size in Bytes must be set to 30. The data structure format is the same as shown on page 120. Maximum length is 66 words (132 bytes), which equates to 22 parameters. For parameter numbering, see DPI Parameter Object on page 198 (Class code 0x93).

(3) See Table 17 on page 106 for limitations of PowerFlex 7-Class drives when using DPI Parameter Object Class code 0x93 for explicit messaging.

MicroLogix 1100/1400 Controller Example Scattered Write Request Data

In this message example, we use the data table addresses in Figure 75 to store the request values to be written to these drive parameters.

See DPI Parameter Object on page 198 (Class code 0x93) for parameter numbering.

Figure 75 or Figure 76 shows the parameter values.

Figure 75 - Example Scattered Write Request Data File for PowerFlex 7-Class Drive

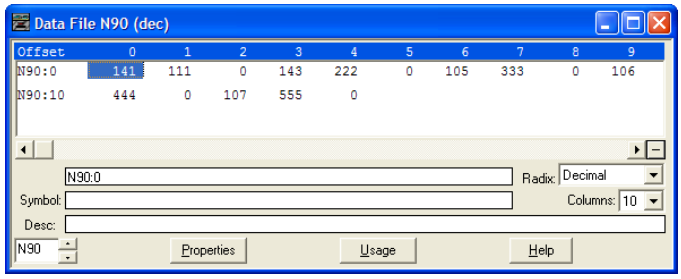

MicroLogix 1100/1400 Controller Example Scattered Write Response Data

In this message example, we use the data table addresses in Figure 76 to store the response values that were written to the requested drive parameters. Values of '0' indicate no errors occurred.

Figure 76 - Example Scattered Write Response Data File for PowerFlex 7-Class Drive

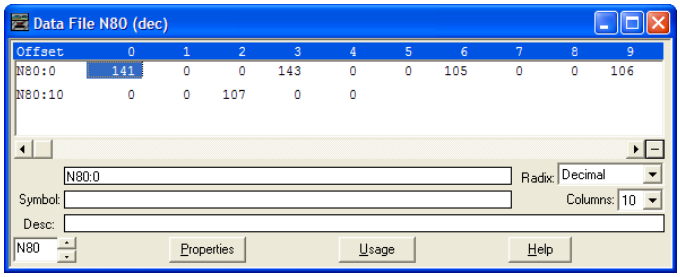

The results of the explicit message appear in the destination tag array N80 (Figure 76). Values of '0' indicate no errors occurred.

MicroLogix 1100/1400 Controller – Explanation of Request and Response Data for Read/Write Multiple Messaging

The data structures in Figure 77 and Figure 78 use 16-bit words and can accommodate up to 22 parameters in a single message. In the Response Message, a parameter number with the high bit set indicates that the associated parameter value field contains an error code (parameter number in response data will be negative).

Important: See Table 17 on page 106 for limitations of PowerFlex 7-Class drives when using Class code 0x93 for explicit messaging.

Figure 77 - Data Structures for Scattered Read Messages

	Request (Source Data)
Word 0	Parameter Number
1	Pad Word
2	Pad Word
3	Parameter Number
4	Pad Word
5	Pad Word
6	Parameter Number
7	Pad Word
8	Pad Word
9	Parameter Number
10	Pad Word
11	Pad Word
12	Parameter Number
13	Pad Word
14	Pad Word
⋮	

	Response (Destination Data)
Word 0	Parameter Number
1	Parameter Value LSW
2	Parameter Value MSW
3	Parameter Number
4	Parameter Value LSW
5	Parameter Value MSW
6	Parameter Number
7	Parameter Value LSW
8	Parameter Value MSW
9	Parameter Number
10	Parameter Value LSW
11	Parameter Value MSW
12	Parameter Number
13	Parameter Value LSW
14	Parameter Value MSW
⋮	

63	Parameter Number
64	Pad Word
65	Pad Word

63	Parameter Number
64	Parameter Value LSW
65	Parameter Value MSW

Figure 78 - Data Structures for Scattered Write Messages

	Request (Source Data)
Word 0	Parameter Number
1	Parameter Value LSW
2	Parameter Value MSW
3	Parameter Number
4	Parameter Value LSW
5	Parameter Value MSW
6	Parameter Number
7	Parameter Value LSW
8	Parameter Value MSW
9	Parameter Number
10	Parameter Value LSW
11	Parameter Value MSW
12	Parameter Number
13	Parameter Value LSW
14	Parameter Value MSW
⋮	
63	Parameter Number
64	Parameter Value LSW
65	Parameter Value MSW

	Response (Destination Data)
Word 0	Parameter Number
1	Pad Word
2	Pad Word
3	Parameter Number
4	Pad Word
5	Pad Word
6	Parameter Number
7	Pad Word
8	Pad Word
9	Parameter Number
10	Pad Word
11	Pad Word
12	Parameter Number
13	Pad Word
14	Pad Word
⋮	
63	Parameter Number
64	Pad Word
65	Pad Word

Troubleshooting

This chapter provides information for diagnosing and troubleshooting potential problems with the adapter and network.

Topic	Page
Understanding the Status Indicators	143
Port Status Indicator	144
Network Status Indicator	145
Link (LS1, LS2) Status Indicator	145
NET A Status Indicator	145
Hardware Reset via Node Switches	146
Viewing Adapter Diagnostic Items	146
Viewing and Clearing Events	149

Understanding the Status Indicators

The adapter has four status indicators. They can be viewed on the adapter or through the device cover.

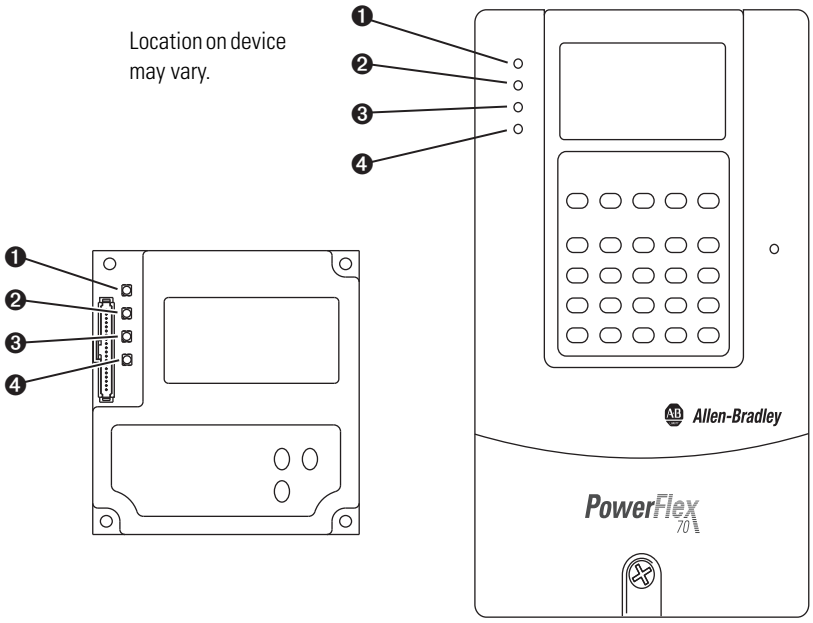

Item	Indicator Name	Description	See
❶	PS	DPI Connection Status	page 144
❷	NS	Network Status	page 145
❸	LS1	Link Status 1	page 145
❹	LS2	Link Status 2	page 145

Port Status Indicator

The LED indicates the status of the adapter's connection to the device as shown in the table below.

Status	Cause	Corrective Action
Off	No power	Securely connect the adapter to the drive using the internal interface (ribbon) cable.
Orange	Peripheral is Connected to an incompatible product, or no DPI ping events are detected.	Verify that cables are securely connected and not damaged. Replace cables if necessary. Cycle power to the device. Verify that Host is an Allen-Bradley compatible product.
Flashing Orange	Requesting DPI I/O Connections	No action required this is normal operation if No DPI IO is enabled
Flashing Green	Normal Operation (DPI connected) - No I/O, or PLC in Program	Place the scanner in RUN mode. Program the controller to recognize and transmit I/O to the adapter. Configure the adapter for the program in the controller. Normal behavior if no DPI I/O is enabled.
Green	Normal Operation (DPI connected) - I/O Operational	No action required.
Red	DPI Problem, Bad CRC of Adapter Parameters or Flash Program	Replace adapter
Flashing Red	DPI Failure or Failed power-on diagnostic test (hardware failure)	Clear faults in the adapter. Verify that all DPI cables on the drive are securely connected and not damaged. Replace cables if necessary. Verify that the DPI drive supports Datalinks. Configure the adapter to use a Datalink that is not already being used by another peripheral. Check mode switch settings. Cycle power to the device If cycling power does not correct the problem, the adapter parameter settings may have been corrupted. Reset defaults and reconfigure the adapter. If resetting defaults does not correct the problem, flash the adapter with the latest firmware release.
Flashing Green and Red	Flash update in progress	Normal during flash update process of application firmware

Network Status Indicator

The LED indicates the status of the adapter's connection to the device as shown in the table below.

Status	Cause	Corrective Action
Steady Off	No power OR No IP Address	Securely connect the adapter to the drive using the Internal Interface (ribbon) cable and to the network using an Ethernet cable. Correctly connect the Ethernet cable to the Ethernet connector. Set a unique IP address and disable BOOTP using a BOOTP server, or set a unique IP address by using adapter parameters. Apply power to the drive (or adapter if mounted in a DPI External Comms Kit).
Flashing Green	An IP address is configured, but no CIP connections are established, and an Exclusive Owner connection has not timed out	Place the controller in RUN mode, or apply power to the peer device that will send I/O. Program the controller or peer device to recognize and transmit I/O or make a messaging connection to the adapter. Configure the adapter for the program in the controller or the I/O from the peer device.
Steady Green	At least one CIP connection (any transport class) is established, and an Exclusive Owner connection has not timed out	No Action Required
Flashing Red	Connection has timed out see the "The EtherNet Adaptation of CIP" Specification sections 9-4.4 for detailed behavior description	Place the scanner in RUN mode, or apply power to the peer device that will send I/O. Check the IGMP Snooping/Ethernet Switches for correct operation. Check the amount of traffic on the network.
Steady Red	Duplicate IP Address detected	Configure the adapter to use a unique IP address and cycle power.
Orange	Adapter Failure (used in conjunction with PS orange)	Verify that cables are securely connected and not damaged. Replace cables if necessary. Cycle power to the drive. Verify that Host is a Scanport or Allen-Bradley compatible product. Replace Adapter
Flashing Green/Red	Self-test on power up	No action required

Link (LS1, LS2) Status Indicator

The LED indicates the status of the adapter's connection to the device as shown in the table below.

Status	Cause	Corrective Action
Blinking Yellow	Network at 10M Baud	Normal Operation
Blinking Green	Network at 100M Baudr	Normal Operation

NET A Status Indicator

This red/green bicolor LED indicates the status of the network connection as shown in the table below.

Status	Cause	Corrective Actions
Off	The adapter is not powered, the adapter is not properly connected to the network, the adapter needs an IP address, or BOOTP is enabled.	• Securely connect the adapter to the drive using the Internal Interface (ribbon) cable and to the network using an Ethernet cable. • Correctly connect the Ethernet cable to the Ethernet connector. • Set a unique IP address and disable BOOTP using a BOOTP server, or set a unique IP address by using adapter parameters. • Apply power to the drive (or adapter if mounted in a DPI External Comms Kit).
Steady Red	The adapter failed the duplicate IP address detection test.	• Configure the adapter to use a unique IP address and cycle power.
Flashing Red	An EtherNet/IP connection has timed out.	• Place the scanner in RUN mode, or apply power to the peer device that will send I/O. • Check the IGMP Snooping/Ethernet Switches for correct operation. • Check the amount of traffic on the network.

Status	Cause	Corrective Actions
Flashing Red/ Green	The adapter is performing a self-test.	No action required.
Flashing Green	The adapter is properly connected, has an IP address, and is connected to an EtherNet/IP network but does not have an I/O connection.	• Place the controller in RUN mode, or apply power to the peer device that will send I/O. • Program the controller or peer device to recognize and transmit I/O or make a messaging connection to the adapter. • Configure the adapter for the program in the controller or the I/O from the peer device.
Steady Green	The adapter is properly connected and communicating on the network to a controller.	No action required.

Hardware Reset via Node Switches

The special switch value of 888 allows the user to return the module to its factory default configuration. The setting of 888 shall reset all local configuration parameters on the adapter,

The setting of 888 is useful in situations where the user wishes to decommission an adapter (but may use it again later, e.g., as a spare module), or when the user wishes to commission a previously-used module that has unknown configuration parameters.

When the switches are set to 888, upon the next power up, a module shall behave as follows:

- Return to factory default settings local to the adapter.
- Cease communications on all communication ports.
- The Port Status LED shall transition to blinking red.
- The Network Status LED shall transition to off.

The purpose of the above behavior is to prevent the user from resetting the module and then never changing the switch setting from 888. Upon the next power up, the module would simply reset itself again.

Viewing Adapter Diagnostic Items

If you encounter unexpected communications problems, the adapter's diagnostic items may help you or Rockwell Automation personnel troubleshoot the problem. Adapter diagnostic items can be viewed with any of these drive configuration tools:

- LCD PowerFlex 7-Class HIM (Diagnostics/Device Items)
- Connected Components Workbench software, version 1.02 or later
- DriveExplorer software, version 2.01 or later
- DriveExecutive software, version 3.01 or later

Using the HIM to View Adapter Diagnostic Items

Step	Example Screen
1. Access parameters in the adapter. See Using the PowerFlex 7-Class HIM on page 28. 2. Press the ▲ or ▼ key to scroll to **Diagnostics**. 3. Press the ↵ (Enter) key to display the Diagnostics menu in the adapter. 4. Repeat steps 2 and 3 to enter the **Device Items** option. 5. Press the ▲ or ▼ key to scroll through the items.	Main Menu: Diagnostics Parameter Device Select Device Item # 3 Reference

Table 24 - Adapter Diagnostic Items

No.	Name	Description
1	Common Logic Cmd	The present value of the Common Logic Command being transmitted to the drive by this adapter.
2	Prod Logic Cmd	The present value of the Product Logic Command being transmitted to the drive by this adapter from the controller.
3	Reference	The present value of the Reference being transmitted to the drive by this adapter. Note that a 16-bit value will be sent as the Most Significant Word of the 32-bit field.
4	Common Logic Sts	The present value of the Common Logic Status being received from the drive by this adapter.
5	Prod Logic Sts	The present value of the Product Logic Status being received from the drive by this adapter to the controller.
6	Feedback	The present value of the Feedback being received from the drive by this adapter. Note that a 16-bit value will be sent as the Most Significant Word of the 32-bit field.
7	Datalink A1 In	The present value of respective Datalink In being transmitted to the drive by this adapter. (If not using a Datalink, this parameter should have a value of zero.)
8	Datalink A2 In	
9	Datalink B1 In	
10	Datalink B2 In	
11	Datalink C1 In	
12	Datalink C2 In	
13	Datalink D1 In	
14	Datalink D2 In	
15	Datalink A1 Out	The present value of respective Datalink Out being received from the drive by this adapter. (If the drive indicates a 16-bit datalink size, the value appears in the least significant 16 bits of this diagnostic item, and the most significant 16 bits of this diagnostic item are zero.)
16	Datalink A2 Out	
17	Datalink B1 Out	
18	Datalink B2 Out	
19	Datalink C1 Out	
20	Datalink C2 Out	
21	Datalink D1 Out	
22	Datalink D2 Out	
23	DPI Rx Errors	The present value of the DPI Receive error counter.
24	DPI Rx Error Max	The maximum value (since reset) of the DPI Receive error counter.
25	DPI Tx Errors	The present value of the DPI Transmit error counter.
26	DPI Tx Error Max	The maximum value (since reset) of the DPI Transmit error counter.
27	Boot Flash Count	Number of times the boot firmware in the adapter has been flash updated.
28	App Flash Count	Number of times the application firmware in the adapter has been flash updated.
29	M-S Input Size	Size of data transferred from the network to the drive.
30	M-S Output Size	Size of data transferred from the drive to the network.

No.	Name	Description
31 32 33 34 35 36	HW Addr 1 HW Addr 2 HW Addr 3 HW Addr 4 HW Addr 5 HW Addr 6	Decimal value of each byte in the adapter's Ethernet hardware address. 255:255:255:255:255:255 [HW Addr 1] [HW Addr 2] [HW Addr 3] [HW Addr 4] HW Addr 5] [HW Addr 6]
37 38 39 40	IP Addr Act 1 IP Addr Act 2 IP Addr Act 3 IP Addr Act 4	Value of each byte in the adapter's present IP address. A value of '0' appears if the adapter does not currently have an IP address. 255.255.255.255 [IP Addr Act 1] [IP Addr Act 2] [IP Addr Act 3] [IP Addr Act 4]
41 42 43 44	Subnet Act 1 Subnet Act 2 Subnet Act 3 Subnet Act 4	Value of each byte in the adapter's present subnet mask. A value of '0' appears if the adapter does not currently have a subnet mask. 255.255.255.255 [Subnet Act 1] [Subnet Act 2] [Subnet Act 3] [Subnet Act 4]
45 46 47 48	Gateway Act 1 Gateway Act 2 Gateway Act 3 Gateway Act 4	Value of each byte in the adapter's present gateway address. A value of '0' appears if the adapter does not currently have a gateway address. 255.255.255.255 [Gateway Act 1] [Gateway Act 2] [Gateway Act 3] [Gateway Act 4]
49	EN Rx Overruns	Number of receive buffer overruns reported by the Ethernet hardware.
50	EN Rx Packets	Number of Ethernet packets that the adapter has received.
51	EN Rx Errors	Number of receive errors reported by the Ethernet hardware.
52	EN Tx Packets	Number of Ethernet packets that the adapter has sent.
53	EN Tx Errors	Number of transmit errors reported by the Ethernet hardware.
54	Last TCP Reset	Last reason that the adapter reset or rejected a TCP/IP connection.
55	Missed IO Pkts	Number of incoming I/O connection packets that the adapter did not receive.
56	OPT Status	Operating status of optional I/O board in DPI External Comms Kit. For the meanings of the individual bits, see Viewing Adapter Diagnostic Items on page 146.
57	OPT RX Errors	Number of optional I/O board receive errors.
58	OPT FW Version	Firmware version of optional I/O board (in DPI External Comms Kit).

Viewing and Clearing Events

The adapter has an event queue to record significant events that occur in the operation of the adapter. When such an event occurs, an entry is put into the event queue. You can view the event queue with any of these drive configuration tools:

- LCD PowerFlex 7-Class HIM
- Connected Components Workbench software, version 1.02 or later
- DriveExplorer software, version 2.01 or later
- DriveExecutive software, version 1.01 or later
- Other clients using the DPI Fault object

The event queue can contain up to 32 entries. Eventually the event queue will become full, since its contents are retained through adapter resets. At that point, a new entry replaces the oldest entry. Only an event queue clear operation or adapter power cycle will clear the event queue contents.

Resetting the adapter to defaults has no effect on the event queue.

Using the HIM to View and Clear Events

Step	Example Screen
Viewing Events 1. Access parameters in the adapter. See Using the PowerFlex 7-Class HIM on page 28. 2. Press the ▲ or ▼ key to scroll to **Diagnostics**. 3. Press the ↵ (Enter) key to display the Diagnostics menu in the adapter. 4. Repeat steps 2 and 3 to enter the **Events** option and then **View Event Queue** option. 5. Press the ▲ or ▼ key to scroll through events. The most recent event is Event 1.	Main Menu: Diagnostics Parameter Device Select
Clearing Events 1. Access parameters in the adapter. See Using the PowerFlex 7-Class HIM on page 28. 2. Press the ▲ or ▼ key to scroll to **Diagnostics**. 3. Press the ↵ (Enter) key to display the Diagnostics menu in the adapter. 4. Repeat steps 2 and 3 to enter the **Events** option and then the **Clear Event** option or **Clr Event Queue** option. A message will pop up to confirm that you want to clear the message or queue. 5. Press the ↵ (Enter) key to confirm your request. If **Clr Event Queue** was selected, all event queue entries will then display 'No Event'.	Event Q: 1 E3 Ping Time Flt Dgn: Events View Event Queue Clear Event Clr Event Queue

Events

Many events in the event queue occur under normal operation. If you encounter unexpected communications problems, the events may help you or Allen-Bradley personnel troubleshoot the problem. The following events may appear in the event queue.

Table 25 - Adapter Events

Code	Event	Description
1	No Event	Empty event queue entry.
2	Device Power Up	Cold/hard boot.
3	Device Reset	Warm/soft boot.
4	Config CRC Error	Startup sequence detected corrupt NV storage.
5	App Updated	Startup sequence detected new application firmware in candidate area.
6	Boot Updated	Startup sequence detected new boot firmware in candidate area.
7	FATAL Error	A FATAL error was reported by the operating system.
8	DPI Bus Off	A bus-off condition is detected on DPI.
9	DPI Ping Timeout	No Ping message was received on DPI for longer than the maximum time allowed
10	DPI Port Invalid	The debounced DPI Pin ID is read as zero or seven after the peripheral has completed startup.
11	DPI Port Changed	The debounced DPI Pin ID has changed after the peripheral has completed startup.
12	DPI Host Reset	The drive issued a reset event.
13	DPI Baud 125K	The peripheral detects that the host is at 125 kbps.
14	DPI Baud 500K	The peripheral detects that the host is at 500 kbps.
15	DPI Host Invalid	Connected to a SCANport product and peripheral does not support a SCANport mode.
16	DPI Dup Port	Another peripheral with the same port number is already present.
17	DPI Type 0 Logon	The peripheral successfully logs in for Type 0 control.
18	DPI Type 0 Time	The peripheral has not received a Type 0 status message for longer than the maximum Type 0 time.
19	DPI DL Logon	The peripheral successfully logs into a data link.
20	DPI DL Error	The host rejects a login to a data link (e.g., data link not supported or already in use)
21	DPI DL Time	No Datalink status message is received on DPI for longer than the maximum time allowed
22	DPI Ctrl Disable	The peripheral has sent a “Soft Control Disable” command to the host.
23	DPI Ctrl Enable	The peripheral has sent a “Soft Control Enable” command to the host.
24	DPI Msg Timeout	A Client-Server message sent by the peripheral has not completed within one second.
25	DPI Manual Reset	Manual reset via DPI triggered.
31	Net Dup Address	IP address conflict.
32	Net Comm Fault	The peripheral detected a communications fault on the network.
33	Net Sent Reset	The peripheral received a reset from the network.
34	Net IO Close	An I/O connection from the network to the peripheral was closed.
35	Net Idle Fault	The peripheral is receiving "Idle" packets from the network.
36	Net IO Open	An I/O connection to the peripheral from the network has been opened.
37	Net IO Timeout	An I/O connection from the network to the Peripheral has timed out.
38	Net IO Size Err	EtherNet I/P I/O connection size mismatch error.
39	PCCC IO Close	The device sending PCCC Control messages to the Peripheral has set the PCCC Control Timeout to a value of zero.

Table 25 - Adapter Events (Continued)

Code	Event	Description
40	PCCC IO Open	The Peripheral has begun receiving PCCC Control messages (the PCCC Control Timeout was previously set to a non-zero value).
41	PCCC IO Timeout	The Peripheral has not received a PCCC control message for longer than the PCCC Control Timeout.
42	Msg Ctrl Open	The peripheral has sent a “Soft Control Enable“ command to the host.
43	Msg Ctrl Close	The peripheral has sent a “Soft Control Disable“ command to the host.
44	Msg Ctrl Timeout	A Client-Server message sent by the peripheral has not completed within one second.
45	Peer IO Open	The peripheral has received the first peer I/O message.
46	Peer IO Timeout	The Peripheral has not received a Peer I/O message for longer than the Peer I/O Timeout.
56	Email Failed	E-mail send failure.
58	Adapter Defaulted	Adapter parameters has been reset to default.
61	Net Link 1 Up	Link has been established on Eth Port 1
62	Net Link 1 Down	Link was lost on Eth Port 1.
63	Net Link 2 Up	Link has been established on Eth Port 2
64	Net Link 2 Down	Link was lost on Eth Port 2.
67	Net Ring Up	The Device Level Ring (DLR) status is Normal.
68	Net Ring Down	The Device Level Ring (DLR) status is Faulted.
69	Invalid Net Cfg	The adapter’s network address configuration parameters are invalid, or the network address provided by the BOOTP or DHCP server is invalid.
70	DHCP Response	The adapter received a response to its DHCP request.

Notes:

Viewing the Adapter Web Pages

This chapter provides instructions on how to monitor the adapter and connected PowerFlex drive by using the adapter's web interface.

Topic	Page
Accessing the Adapter Web Home Page	153
Viewing the Web Pages	153
Process Display Home Page	156
Browse DPI Device Folder	156
Diagnostics Web Page	157
Administrative Web Pages	160

Future enhancements may result in adapter web pages that look different than the examples shown in this chapter.

Accessing the Adapter Web Home Page

After configuring the adapter, you can view its web pages. These pages present information about the adapter, the device to which it is connected, and other DPI devices connected to or installed in the device such as a HIM or I/O card.

The adapter can be configured to automatically send email messages to desired addresses when selected device faults occur and/or are cleared when the adapter rakes a communication or idle fault action. Bit 0 of **Parameter 57-[Web Features]** can be used to protect the configured settings. For more details, see page 162.

Viewing the Web Pages

The adapter can be configured to automatically send e-mail messages to desired addresses when selected drive faults occur and/or are cleared, and/or when the adapter takes a communication or idle fault action.

Bit 0 of **Parameter 57 - [Web Features]** can be used to protect the configured settings. For more details, see page 162.

1. On a computer with access to the EtherNet/IP network on which the adapter/device is installed, launch a web browser such as Microsoft™ Internet Explorer, version 5.0 or later.

The computer can access the adapter web pages if it is connected to:

- The same network as the adapter.
- A network with access to the adapter's network via a gateway device (for example, a router).

2. In the Address box, type the IP address of the adapter.
3. Press ENTER.

The adapter web Home Page (Figure 79) appears.

Important: Using the browser's View >Refresh function will always re-display the adapter home page while viewing any of the adapter's web pages.

Figure 79 - Adapter Web Home Page Example

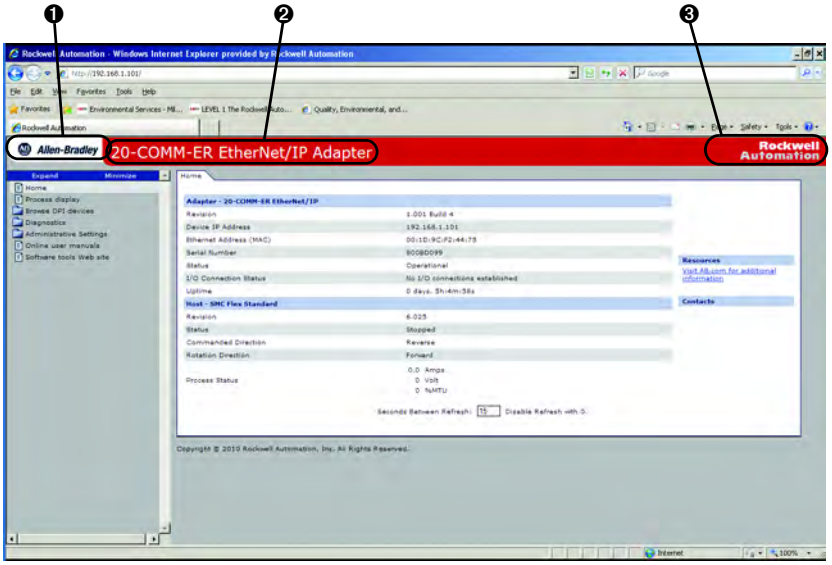

Title Bar on Adapter Web Pages

The title bar appears on the adapter Home Page and all of the adapter's other web pages. The title bar consists of three elements as shown in Figure 79.

Title Bar Element	Description
❶ Allen-Bradley logo	This logo is a hyperlink. Click it to view the ab.com web Home Page.
❷ Adapter Title	Shows the adapter type or user-configurable title.
❸ Rockwell Automation logo	This logo is a hyperlink. Click it to view the Rockwell Automation web Home Page.

Navigation Pane on Adapter Web Pages

The navigation pane appears on the left side of the adapter Home Page and all of the adapter's other web pages. The navigation pane consists of links and link folders which can be expanded or minimized. The following table shows all navigation pane links and link folders.

Navigation Pane Link/ Folder	Description
Home link	Click this link to view the adapter's Home Page (Figure 79).
Process display link	Click this link to view the host drive's Process Display pop-up window (Figure 81).
Browse DPI devices folder	Click this folder to expand and view the Port folders for all present DPI devices, including the drive, adapter, and other devices connected to the drive such as a HIM.
Diagnostics	Displays Ethernet/IP diagnostic information to aid in monitoring and troubleshooting the Ethernet/IP network.
Administrative Settings	Manage adapter settings such as password, IP address, and network configuration. Password Authorization is required to access subfolders.
Online user manuals link	Click this link to view Rockwell Automation's web page with documentation for drives, SMCs, and other devices.
Software tools Web site link	Click this link to view Allen-Bradley's web page with information about software tools such as DriveExplorer and DriveExecutive.

Figure 80 - Adapter Web Home Page Example

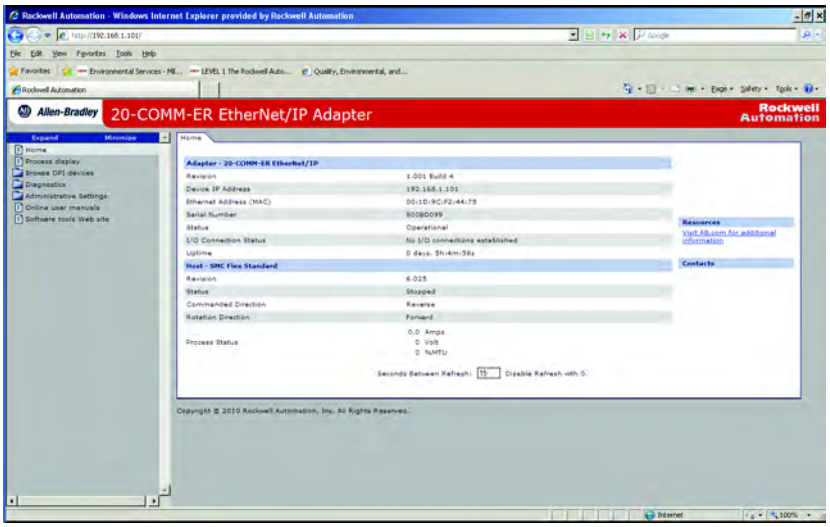

Process Display Home Page

The Process Display pop-up window dynamically shows the host drive's information. To view this window, click the 'Process display' link in the navigation pane.

Figure 81 - Example of Process Display Pop-up Window

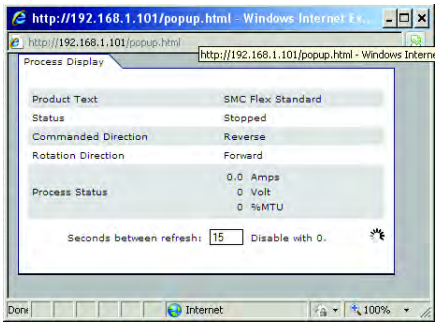

Browse DPI Device Folder

This folder gives access to the databases, fault and alarm queues and diagnostic data (if applicable) to all the devices connected to the DPI network.

Each Device on the DPI network has its own folder that has links to module information, parameters, diagnostic information, fault queues and alarm queue. The Parameters are further organized into the DPI groups defined for the specific device.

Figure 82 shows an example of an SMC-50 device acting as the DPI host on port 0 of the DPI network.

Figure 82 - Example of an SMC-50 Controller Acting as DPI Host

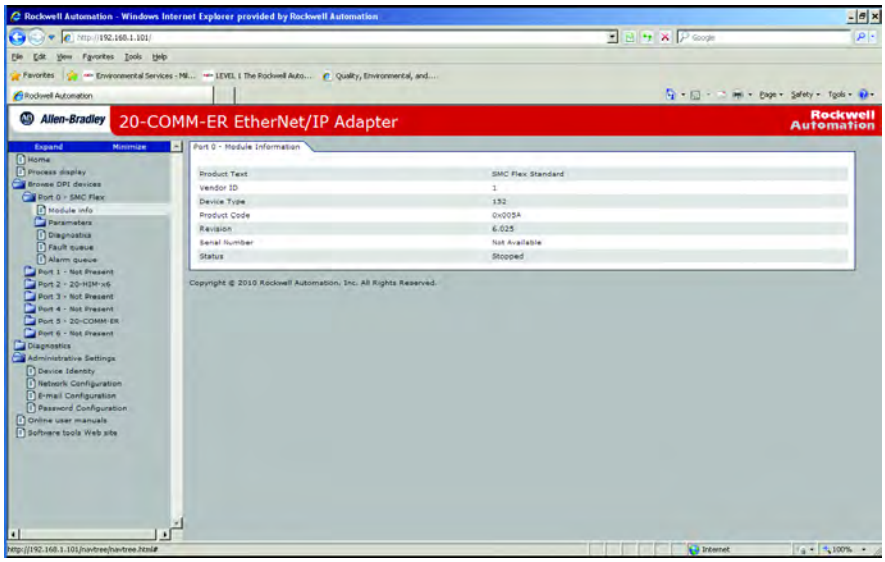

Parameters for the SMC-50 can be changed via the parameters web page by clicking on the Edit button near the bottom of the web page and entering the correct username and password when the authorization pop up window appears.

Note: PowerFlex drives on the network will not allow parameters to be changed via the Parameter Web page.

Figure 83 - Example of Parameter Web Page

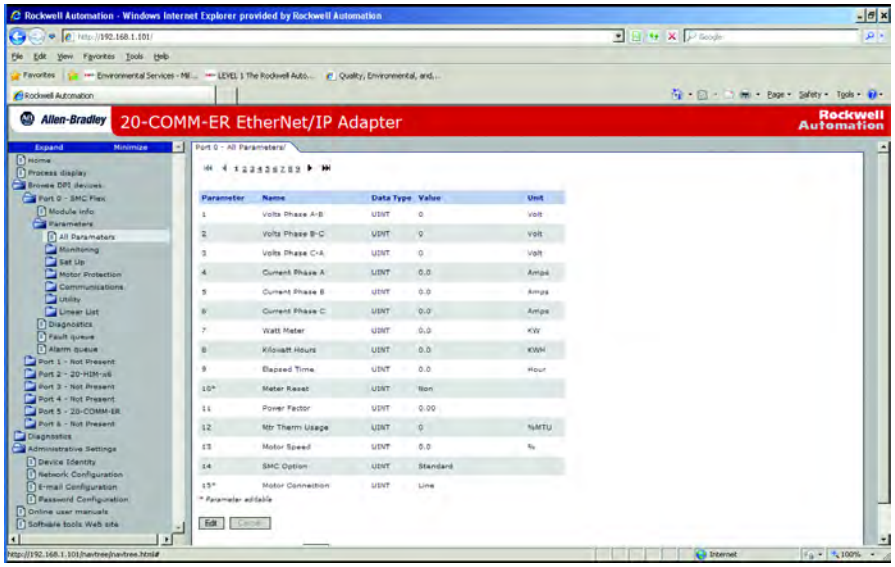

Diagnostics Web Page

The diagnostics web page provides the user with Adapter performance on the network detailing the configuration, status and traffic information about the EtherNet/IP network communications.

Diagnostic Overview link

This link provides a general overview of the Adapter's activity on the EtherNet/IP network.

Figure 84 - Diagnostic Overview Page

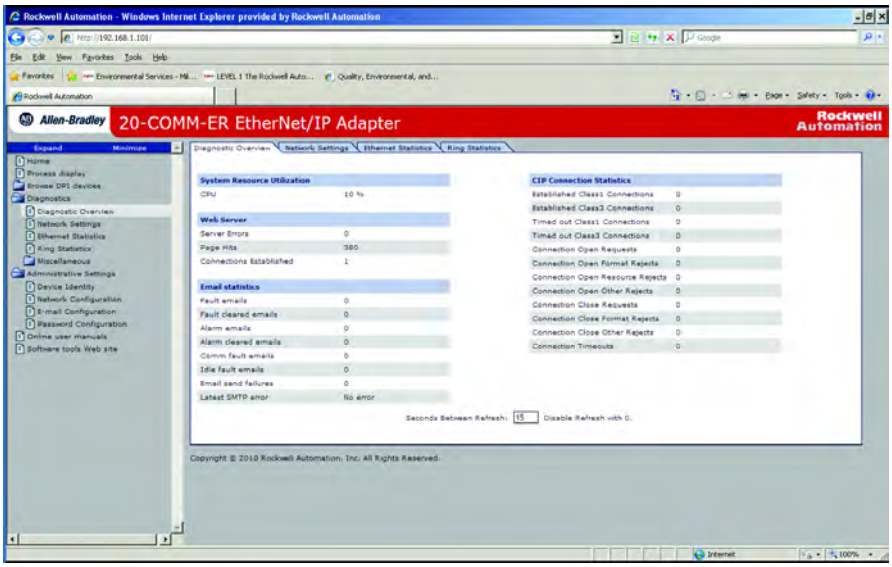

Network Setting Link

This link provides information about the adapter's Ethernet settings and network activities.

Figure 85 - Network Setting Page

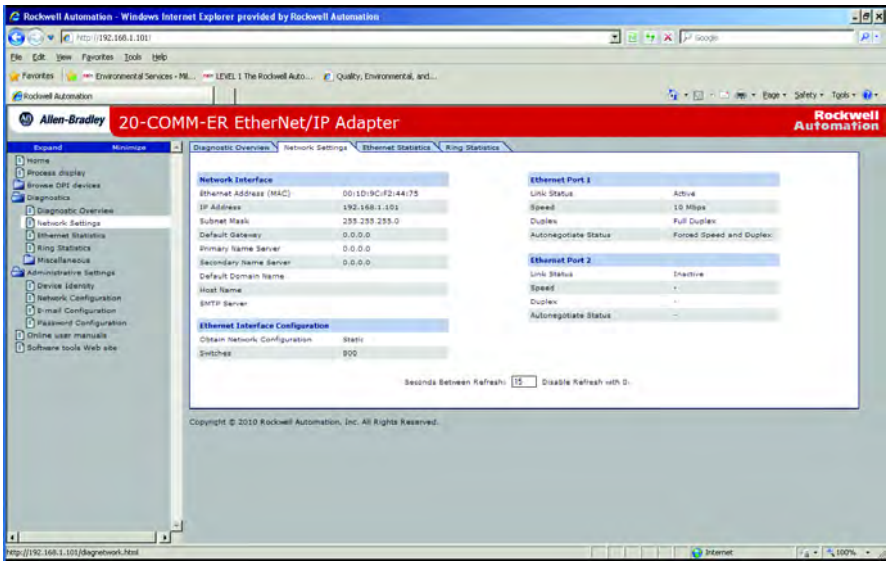

EtherNet/IP Statistics Link

This links displays information about the traffic activity on the EtherNet/IP network.

Figure 86 - EtherNet/IP Statistics Page

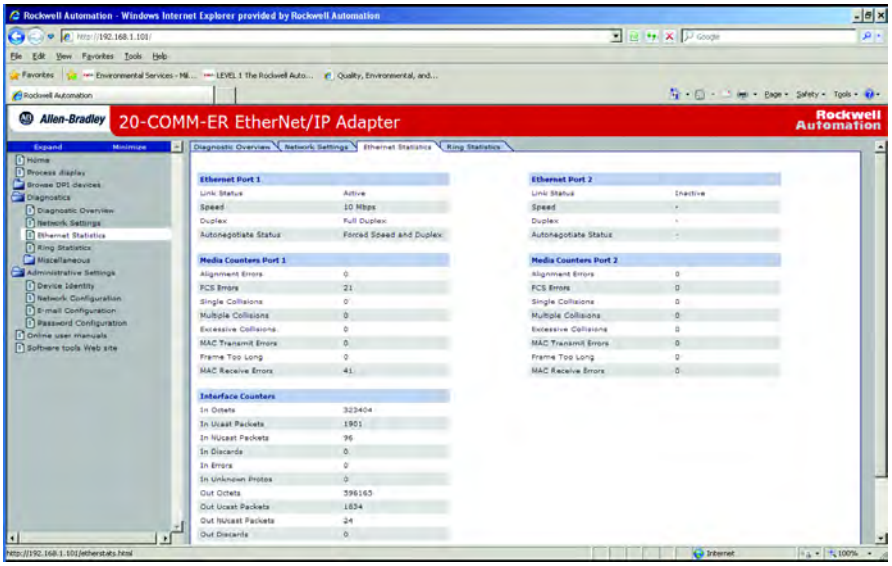

Ring Statistics link

This page displays configuration and status of the network and identifies the ring supervisor if the Ethernet network is configured as a ring.

Figure 87 - Ring Statistics Page

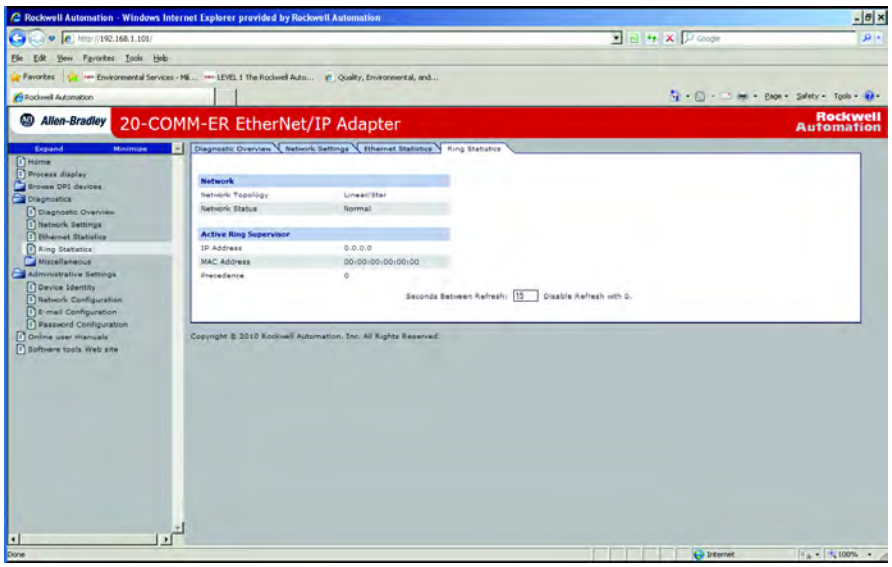

Crash Display Link

Figure 88 - Crash Display Page

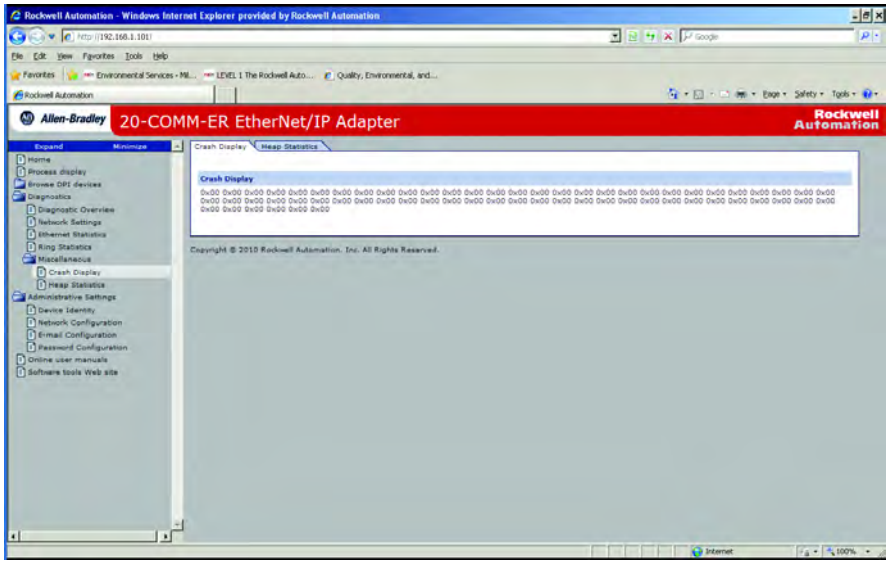

Heap Statistics Display link

Figure 89 - Heap Statistics Page

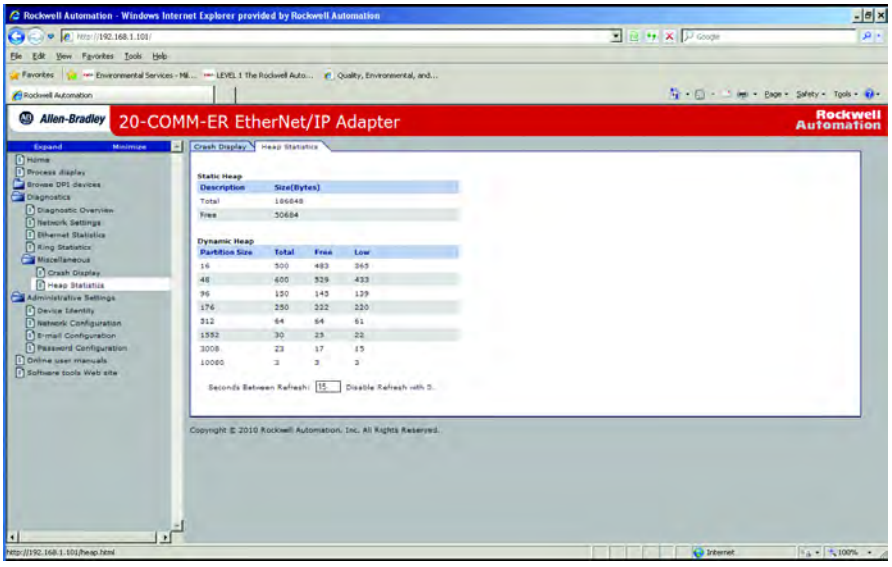

Administrative Web Pages

Administrative Web pages give the user access to the 20-COMM-ER module for the purpose of configuring the device for network operation and messaging.

Device Identity Link

The Device Identity link is used to give the Adapter an identity on the EtherNet/IP network that will be recognized by the user, software tools, and other devices on the network.

Figure 90 - Device Identity Page

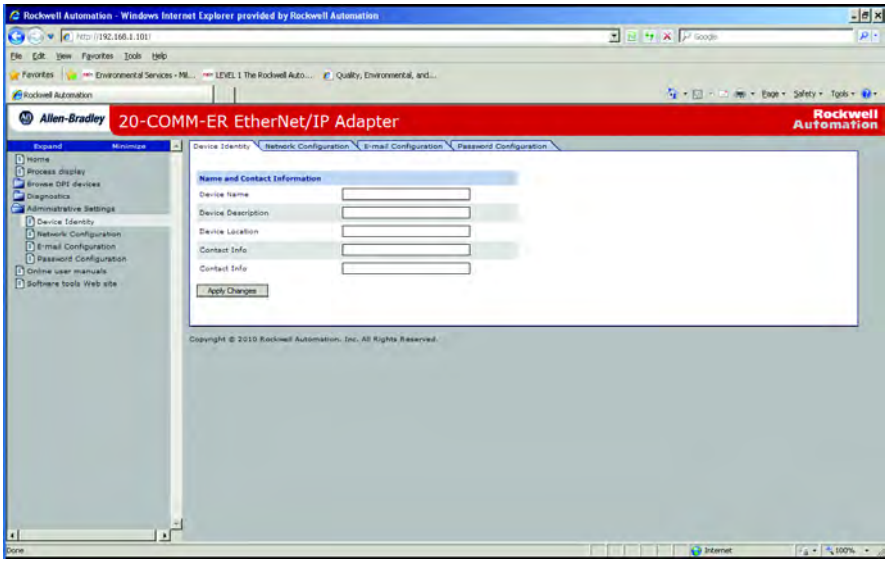

Network Configuration Link

The network configuration link allows setting of the TCP/IP layer of the Adapter, including IP address, Subnet mask, and gateway address.

Figure 91 - Network Configuration Page

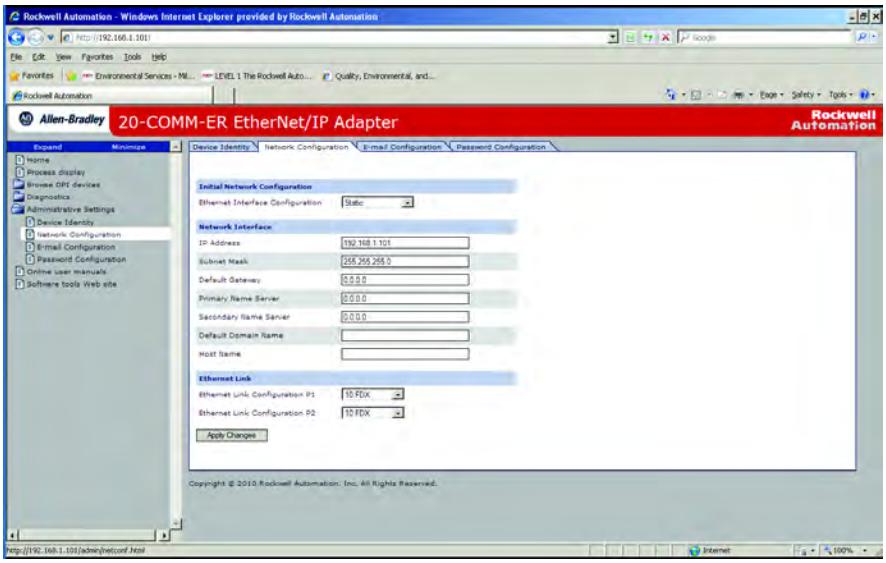

Email Configuration Link

The Configure E-mail Notification web page contains selections and data fields for configuring the adapter to automatically send email messages to desired addresses when selected types of events occur. To view this web page, click the 'Configure e-mail...' link (highlighted in Figure 92) in the navigation pane.

Figure 92 - E-mail Configuration Page

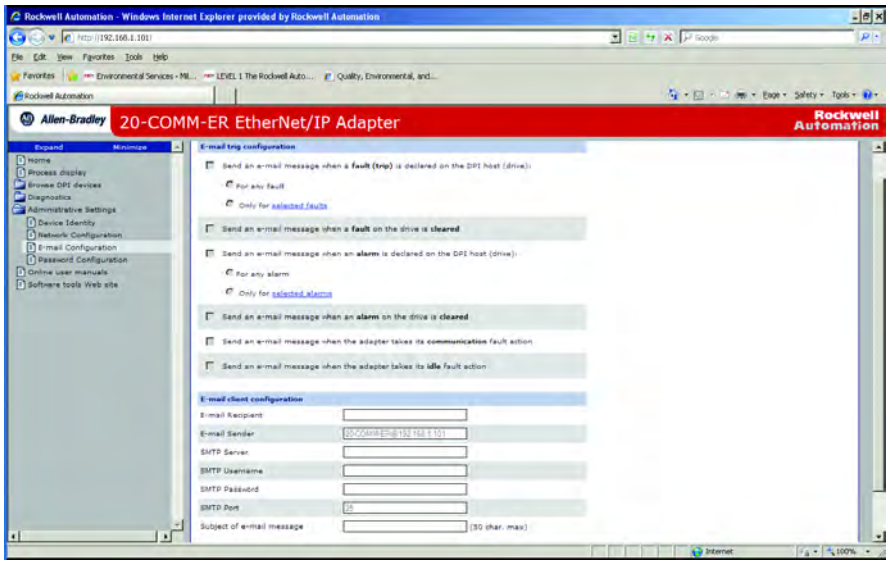

To configure email notification, perform the following steps.

1. Click the desired 'Send an e-mail message when...' check boxes you want to occur that will send email notification. If you only want email notification when selected faults/alarms occur:
   a. Click the respective fault and/or alarm radio buttons.
   b. Click the 'selected faults' link and/or 'selected alarms' link. Figure 93 shows an example faults configuration page.

Figure 93 - Example of Selected Faults Configuration Page

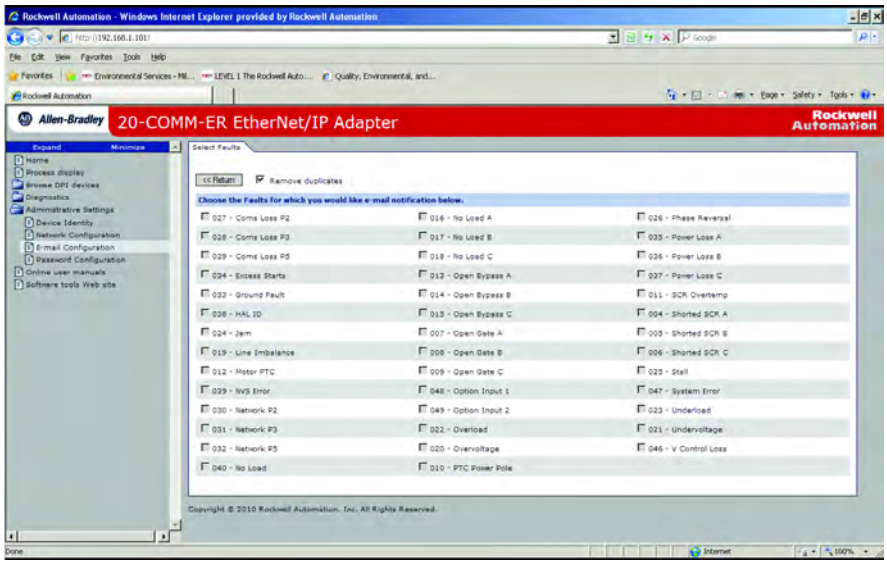

c. Click the desired fault/alarm check boxes.

d. Click **Apply Changes**.

e. Click the 'Back to E-mail Configuration Page' link.

2. Type the following information in their respective boxes.

Information	Description
'SMTP Server'	Type in the address of the mail server that will be used to deliver the email messages. (When the IP address is unknown, read the TIP shown below this table to determine the mail server address.)
'TO email recipient'	Type in addresses to where you want email messages to be sent. Multiple addresses can be used, but they must be separated by commas (comma delimited).
'Subject of e-mail message…'	Type in the desired subject text for the email message.

Figure 94 shows an example email message automatically sent by the adapter in response to selected events.

Figure 94 - Example of E-mail Message Sent by the Adapter

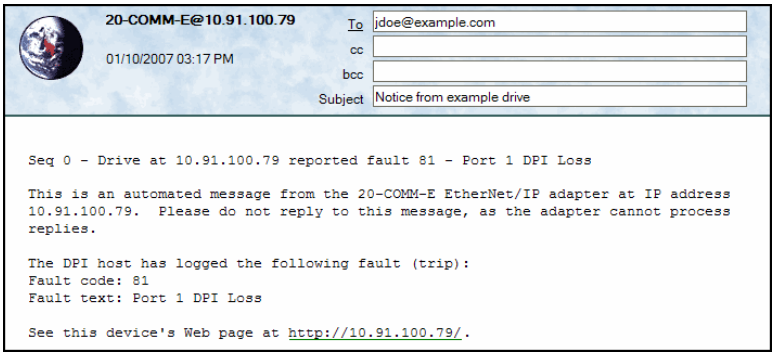

TIP To stop email messages, uncheck all of the 'Send an e-mail message when…' boxes.

Disabling the adapter web pages by setting the Web Pages Switch (SW2 in Figure 2) to the 'Disable Web' position will **not stop** the adapter from sending email messages.

Password Configuration

The Password Configuration Link allows the user to set or change a password. The factory default configuration is:

Username: Administrator

Password: <none> no password is set

Figure 95 - Password Configuration Page

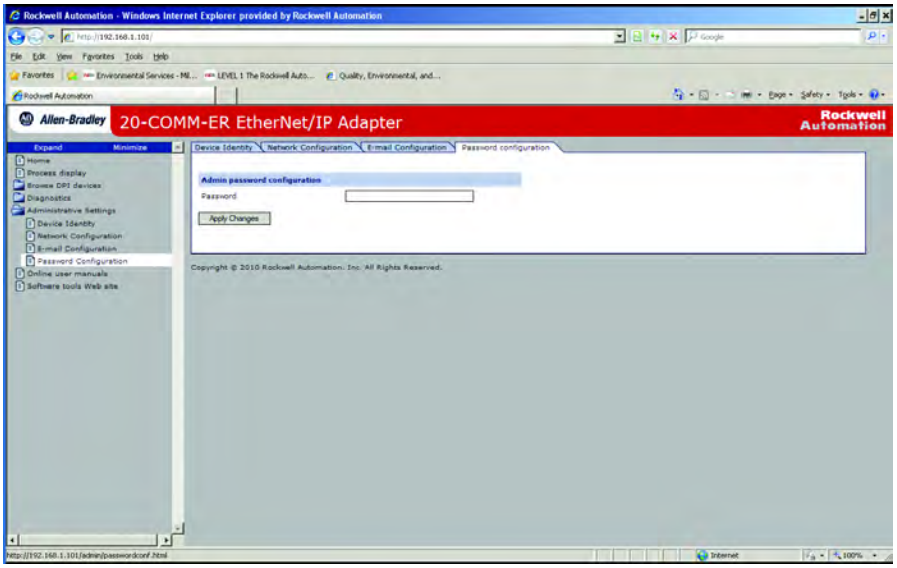

Notes:

Using the Adapter in a DPI External Comms Kit (20-XCOMM-DC-BASE)

This chapter provides information and examples that explain how to use the adapter in a DPI External Comms Kit (20-XCOMM-DC-BASE).

The adapter is typically installed in the internal communication slot on the PowerFlex 7-Class drive. However, an externally-mounted adapter may be desired when:

- The PowerFlex drive is already connected to an existing network, such as Remote I/O, and a second network is desired for a DriveExplorer or DriveExecutive software tool, data collection, and so forth.
- The PowerFlex drive is remotely located next to some I/O devices that also need to be networked. The DPI External Comms Kit has an option slot for general-purpose network I/O that a controller can use. Both the drive and I/O devices are handled as one node on the network to reduce the network node count.

Topic	Page
Installing the Adapter	167

Installing the Adapter

The adapter can be installed in a DPI External Comms Kit.

Figure 96 - Mounting and Connecting the Adapter

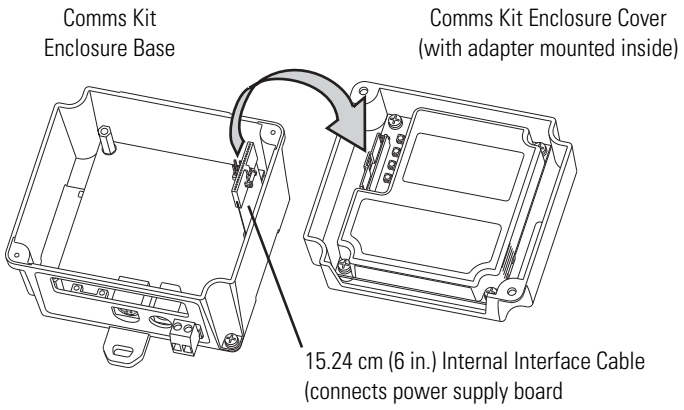

For more information, see the DPI External Communications Kit Installation Instructions, publication 20COMM-IN001.

Specifications

This appendix presents the specifications for the adapter.

Topic	Page
Communications	169
Electrical	169
Mechanical	170
Environmental	170
Regulatory Compliance	170

Communications

Network Protocol Data Rates	 EtherNet/IP 10 Mbps Full Duplex 10 Mbps Half Duplex 100 Mbps Full Duplex 100 Mbps Half Duplex
Connection Limits	30 TCP connections Two 'class 1' connections and 14 'class 3' connections are supported. The following activities use a CIP connection: • Explicit messaging where 'connected' is chosen (for example, in a checkbox in RSLogix 5000) The following activities **do not** use a CIP connection: • Explicit messaging-based control using PCCC or the Register or Assembly objects, including the PLC-5, SLC 500, and MicroLogix 1100 examples in Chapter 4 • Explicit messaging where 'connected' is **not** chosen, which is typically the default
Requested Packet Interval (RPI)	2 ms minimum
Drive Protocol Data Rates	 DPI 125 kbps or 500 kbps

Electrical

Consumption Drive Network	 482 mA at 5V DC supplied by the host (drive or DPI External Comms Kit) N/A

Mechanical

Dimensions	
Height	19 mm (0.75 inches)
Length	86 mm (3.39 inches)
Width	78.5 mm (3.09 inches)
Shipping Weight	150 g (5.2 oz.)

Environmental

Temperature	
Operating	-10…50 °C (14…122 °F)
Storage	-40…85 °C (-40…185 °F)
Relative Humidity	5…95% non-condensing
Atmosphere	**Important:** The adapter **must not** be installed in an area where the ambient atmosphere contains volatile or corrosive gas, vapors or dust. If the adapter is not going to be installed for a period of time, it must be stored in an area where it will not be exposed to a corrosive atmosphere.

Regulatory Compliance

Certification	Drive Specification	SMC Specification
UL	UL508C	UL508
cUL	CSA C22.2 No. 14-2010	CSA C22.2 No. 14-10
CE	EN61800-3	EN60947-4-2
CTick	EN61800-3	EN60947-4-2

NOTE: This is a product of category C2 according to IEC 61800-3. In a domestic environment this product may cause radio interference in which case supplementary mitigation measures may be required.

Adapter Parameters

This appendix provides information about the adapter parameters.

Topic	Page
About Parameter Numbers	171
Parameter List	171

About Parameter Numbers

The parameters in the adapter are numbered consecutively. However, depending on which configuration tool you use, they may have different numbers.

Configuration Tool	Numbering Scheme
• HIM • Connected Components Workbench software • DriveExplorer • DriveExecutive	The adapter parameters begin with parameter 01. For example, **Parameter 01 - [DPI Port]** is parameter 01 as indicated by this manual.
• Explicit Messaging	See Chapter 6, Using Explicit Messaging and Appendix C, EtherNet/IP Objects for details.

Parameter List

Parameter No.	Name and Description	Details
01	**[DPI Port]** Displays the port to which the adapter is connected. This will usually be port 5.	Default: 5 Minimum: 0 Maximum: 7 Type: Read Only
02	**[DPI Data Rate]** Displays the data rate used by the drive. This data rate is set in the drive and the adapter detects it.	Default: 0 = 125 kbps Values: 0 = 125 kbps 1 = 500 kbps Type: Read Only
03	**[BOOTP/DHCP]** Configures the adapter to use BOOTP so that you can set its IP address, subnet mask, and gateway address with a BOOTP server.	Default: 1 = Enabled Values: 0 = Disabled 1 = Enabled Type: Read/Write Reset Required: Yes

Parameter No.	Name and Description	Details
04 05 06 07	**[IP Addr Cfg 1]** **[IP Addr Cfg 2]** **[IP Addr Cfg 3]** **[IP Addr Cfg 4]** Sets the IP address bytes for the adapter's network address when **Parameter 03 - [BOOTP]** is set to '0' (Disabled). 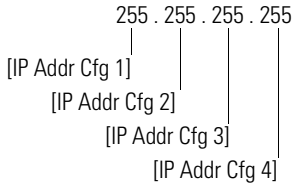	Default: 0 Default: 0 Default: 0 Default: 0 Minimum: 0 Maximum: 255 Type: Read/Write Reset Required: Yes
08 09 10 11	**[Subnet Cfg 1]** **[Subnet Cfg 2]** **[Subnet Cfg 3]** **[Subnet Cfg 4]** Sets the subnet mask bytes for the adapter's network address when **Parameter 03 - [BOOTP]** is set to '0' (Disabled). 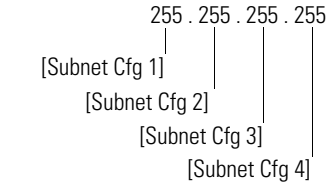	Default: 0 Default: 0 Default: 0 Default: 0 Minimum: 0 Maximum: 255 Type: Read/Write Reset Required: Yes
12 13 14 15	**[Gateway Cfg 1]** **[Gateway Cfg 2]** **[Gateway Cfg 3]** **[Gateway Cfg 4]** Sets the gateway address bytes for the adapter's network address when **Parameter 03 - [BOOTP]** is set to '0' (Disabled). 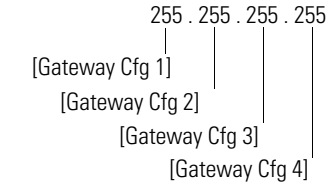	Default: 0 Default: 0 Default: 0 Default: 0 Minimum: 0 Maximum: 255 Type: Read/Write Reset Required: Yes
16	**[EN P1 Rate Cfg]** Sets the speed and duplex network data rate at which the adapter communicates. (Updates **Parameter 17 - [EN P1 Rate Act]** after a reset.)	Default: 0 = Autodetect Values: 0 = Autodetect 1 = 10 Mbps Full 2 = 10 Mbps Half 3 = 100 Mbps Full 4 = 100 Mbps Half Type: Read/Write Reset Required: Yes

Parameter No.	Name and Description	Details
17	**[EN P1 Rate Act]** Displays the actual speed and duplex network data rate used by the adapter.	Default: 0 = No Link Values: 0 = No Link 1 = 10 Mbps Full 2 = 10 Mbps Half 3 = 100 Mbps Full 4 = 100 Mbps Half Type: Read Only
18	**[EN P2 Rate Cfg]** Sets the speed and duplex network data rate at which the adapter communicates. (Updates **Parameter 19 - [EN PI Rate Act]** after a reset.)	Default: 0 = Autodetect Values: 0 = Autodetect 1 = 10 Mbps Full 2 = 10 Mbps Half 3 = 100 Mbps Full 4 = 100 Mbps Half Type: Read/Write Reset Required: Yes
19	**[EN P2 Rate Act]** Displays the actual speed and duplex network data rate used by the adapter.	Default: 0 = No Link Values: 0 = No Link 1 = 10 Mbps Full 2 = 10 Mbps Half 3 = 100 Mbps Full 4 = 100 Mbps Half Type: Read Only
20	**[Ref/Fdbk Size]** Displays the size of the Reference/Feedback. The drive determines the size of the Reference/ Feedback.	Default: 0 = 16-bit Values: 0 = 16-bit 1 = 32-bit Type: Read Only
21	**[Datalink Size]** Displays the size of each Datalink word. The drive determines the size of Datalinks.	Default: 0 = 16-bit Values: 0 = 16-bit 1 = 32-bit Type: Read Only
22	**[Reset Module]** No action if set to '0' (Ready). Resets the adapter if set to '1' (Reset Module). Restores the adapter to its factory default settings if set to '2' (Set Defaults). This parameter is a command. It will be reset to '0' (Ready) after the command has been performed.	Default: 0 = Ready Values: 0 = Ready 1 = Reset Module 2 = Set Defaults Type: Read/Write Reset Required: No

ATTENTION: Risk of injury or equipment damage exists. If the adapter is transmitting I/O that controls the drive, the drive may fault when you reset the adapter. Determine how your drive will respond before resetting a connected adapter.

Parameter No.	Name and Description	Details
23	**[Comm Flt Action]** Sets the action that the adapter and drive will take if the adapter detects that I/O communication has been disrupted. This setting is effective only if I/O that controls the drive is transmitted through the adapter. When communication is re-established, the drive will automatically receive commands over the network again.	Default: 0 = Fault Values: 0 = Fault 1 = Stop 2 = Zero Data 3 = Hold Last 4 = Send Flt Cfg Type: Read/Write Reset Required: No

ATTENTION: Risk of injury or equipment damage exists. **Parameter 23 - [Comm Flt Action]** lets you determine the action of the adapter and connected drive if I/O communication is disrupted. By default, this parameter faults the drive. You can set this parameter so that the drive continues to run, however, precautions should be taken to verify that the setting of this parameter does not create a risk of injury or equipment damage. When commissioning the drive, verify that your system responds correctly to various situations (for example, a disconnected cable).

Parameter No.	Name and Description	Details
24	**[Idle Flt Action]** Sets the action that the adapter and drive will take if the adapter detects that the controller is in program mode or faulted. This setting is effective only if I/O that controls the drive is transmitted through the adapter. When the controller is put back in Run mode, the drive will automatically receive commands over the network again.	Default: 0 = Fault Values: 0 = Fault 1 = Stop 2 = Zero Data 3 = Hold Last 4 = Send Flt Cfg Type: Read/Write Reset Required: No

ATTENTION: Risk of injury or equipment damage exists. **Parameter 24 - [Idle Flt Action]** lets you determine the action of the adapter and connected drive when the controller is idle. By default, this parameter faults the drive. You can set this parameter so that the drive continues to run, however, precautions should be taken to verify that the setting of this parameter does not create a risk of injury or equipment damage. When commissioning the drive, verify that your system responds correctly to various situations (for example, a faulted controller).

Parameter No.	Name and Description	Details
25	**[DPI I/O Cfg]** Sets the I/O that is transferred through the adapter.	Default: xxx0 0001 Bit Values: 0 = I/O Disabled 1 = I/O Enabled Type: Read/Write Reset Required: Yes

Bit Definition	Not Used	Not Used	Not Used	Datalink D	Datalink C	Datalink B	Datalink A	Cmd/Ref
Default	x	x	x	0	0	0	0	1
Bit	7	6	5	4	3	2	1	0

Parameter No.	Name and Description	Details
26	**[DPI I/O Act]** Displays the I/O that the adapter is actively transmitting. The value of this parameter will usually be equal to the value of **Parameter 25 - [DPI I/O Cfg]**.	Default: xxx0 0001 Bit Values: 0 = I/O Disabled 1 = I/O Enabled Type: Read Only Bit Definition: Not Used, Not Used, Not Used, Datalink D, Datalink C, Datalink B, Datalink A, Cmd/Ref Default: x, x, x, 0, 0, 0, 0, 1 Bit: 7, 6, 5, 4, 3, 2, 1, 0
27	**[Flt Cfg Logic]** Sets the Logic Command data that is sent to the drive if any of the following is true: • **Parameter 23 - [Comm Flt Action]** is set to '4' (Send Flt Cfg) and I/O communication is disrupted. • **Parameter 24 - [Idle Flt Action]** is set to '4' (Send Flt Cfg) and the controller is idle. • **Parameter 43 - [Peer Flt Action]** is set to '4' (Send Flt Cfg) and peer I/O communication is disrupted. The bit definitions will depend on the product to which the adapter is connected. See Appendix D or the documentation for the drive being used.	Default: 0000 0000 0000 0000 Minimum: 0000 0000 0000 0000 Maximum: 1111 1111 1111 1111 Type: Read/Write Reset Required: No
28	**[Flt Cfg Ref]** Sets the Reference data that is sent to the drive if any of the following is true: • **Parameter 23 - [Comm Flt Action]** is set to '4' (Send Flt Cfg) and I/O communication is disrupted. • **Parameter 24 - [Idle Flt Action]** is set to '4' (Send Flt Cfg) and the controller is idle. • **Parameter 43- [Peer Flt Action]** is set to '4' (Send Flt Cfg) and peer I/O communication is disrupted.	Default: 0 Minimum: 0 Maximum: 4294967295 Type: Read/Write Reset Required: No **Important:** If the drive uses a 16-bit Reference, the most significant word of this value must be set to zero (0) or a fault will occur.

Parameter No.	Name and Description	Details
29 30 31 32 33 34 35 36	**[Flt Cfg A1 In]** **[Flt Cfg A2 In]** **[Flt Cfg B1 In]** **[Flt Cfg B2 In]** **[Flt Cfg C1 In]** **[Flt Cfg C2 In]** **[Flt Cfg D1 In]** **[Flt Cfg D2 In]** Sets the data that is sent to the Datalink in the drive if any of the following is true: • **Parameter 23 - [Comm Flt Action]** is set to '4' (Send Flt Cfg) and I/O communication is disrupted. • **Parameter 24 - [Idle Flt Action]** is set to '4' (Send Flt Cfg) and the controller is idle. • **Parameter 43 - [Peer Flt Action]** is set to '4' (Send Flt Cfg) and peer I/O communication is disrupted.	Default: 0 Default: 0 Default: 0 Default: 0 Default: 0 Default: 0 Default: 0 Default: 0 Minimum: 0 Maximum: 4294967295 Type: Read/Write Reset Required: No **Important:** If the drive uses 16-bit Datalinks, the most significant word of this value must be set to zero (0) or a fault will occur.
37	**[M-S Input]** Sets the Master-Slave input data. This data is produced by the scanner and consumed by the adapter.	Default: xxx0 0001 Bit Values: 0 = I/O disabled 1 = I/O enabled Type: Read/Write Reset Required: Yes

Bit Definition	Not Used	Not Used	Not Used	Datalink D Input	Datalink C Input	Datalink B Input	Datalink A Input	Cmd/Ref
Default	x	x	x	0	0	0	0	1
Bit	7	6	5	4	3	2	1	0

38	**[M-S Output]** Sets the Master-Slave output data. This data is produced by the adapter and consumed by the Master device (for example, scanner).	Default: xxx0 0001 Bit Values: 0 = I/O disabled 1 = I/O enabled Type: Read/Write Reset Required: Yes

Bit Definition	Not Used	Not Used	Not Used	Datalink D Output	Datalink C Output	Datalink B Output	Datalink A Output	Cmd/Ref
Default	x	x	x	0	0	0	0	1
Bit	7	6	5	4	3	2	1	0

39	**[Ref Adjust]** Sets the percent scale factor for the Reference received from the network.	Default: 100.00% Minimum: 0.00% Maximum: 200.00% Type: Read/Write Reset Required: No

ATTENTION: To guard against equipment damage and/or personal injury, note that changes to **Parameter 39 - [Ref Adjust]** take effect immediately. A drive receiving its Reference from the adapter will receive the newly scaled Reference, resulting in a change of speed.

Parameter No.	Name and Description	Details
40 41	**[Peer A Input]** **[Peer B Input]** Sets the destination of the peer I/O input. The adapter receives this data from the network and sends it to the drive. **Important:** Changes to these parameters are ignored when **Parameter 49 - [Peer Inp Enable]** is set to '1' (On). **Important:** If the parameter is set to input a Logic Command, configure the mask in **Parameter 42 - [Peer Cmd Mask]** so that the desired bits from the peer device are used.	Default: 0 = Off Default: 0 = Off Values: 0 = Off 1 = Cmd/Ref 2 = Datalink A Input 3 = Datalink B Input 4 = Datalink C Input 5 = Datalink D Input Type: Read/Write Reset Required: No
42	**[Peer Cmd Mask]** Sets the mask for the Logic Command word when it is received through peer input. If the mask bit is '0' (Off), the command bit is ignored and not used. If the mask bit is '1' (On), the command bit is checked and used. **Important:** If the adapter receives a Logic Command from both a Master device and a peer device, each command bit must have only one source. The source of command bits set to '0' will be the Master device. The source of command bits set to '1' will be the peer device.	Default: 0000 0000 0000 0000 Minimum: 0000 0000 0000 0000 Maximum: 1111 1111 1111 1111 Values: 0 = Ignore bit 1 = Check bit Type: Read/Write Reset Required: Yes
43	**[Peer Flt Action]** Sets the action that the adapter and drive will take if the adapter detects that peer I/O communication has been disrupted. This setting is effective only if I/O is transmitted through the adapter.	Default: 0 = Fault Values: 0 = Fault 1 = Stop 2 = Zero Data 3 = Hold Last 4 = Send Flt Cfg Type: Read/Write Reset Required: No

ATTENTION: Risk of injury or equipment damage exists. **Parameter 43 - [Peer Flt Action]** lets you determine the action of the adapter and connected drive if the adapter is unable to communicate with the designated peer. By default, this parameter faults the drive. You can set this parameter so that the drive continues to run, however, precautions should be taken to verify that the setting of this parameter does not create a risk of injury or equipment damage. When commissioning the drive, verify that your system responds correctly to various situations (for example, a disconnected cable).

Parameter No.	Name and Description	Details
44 45 46 47	**[Peer Inp Addr 1]** **[Peer Inp Addr 2]** **[Peer Inp Addr 3]** **[Peer Inp Addr 4]** Sets the IP address bytes that specifies the device from which the adapter receives (consumes) peer I/O data. 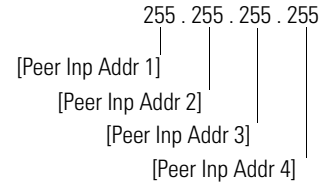 **Important:** The Peer Inp Addr must be on the same subnet as the 20-COMM-ER. See page 226 for more information. Changes to these parameters are ignored when **Parameter 49 - [Peer Inp Enable]** is set to '1' (On).	Default: 0 Default: 0 Default: 0 Default: 0 Minimum: 0 Maximum: 255 Type: Read/Write Reset Required: No
48	**[Peer Inp Timeout]** Sets the timeout for a peer I/O connection. If the time is reached without the adapter receiving (consuming) a message, the adapter will respond with the action specified in **Parameter 43 - [Peer Flt Action]**. In an adapter receiving (consuming) peer I/O, the value of this parameter must be greater than the product of the value of **Parameter 54 - [Peer Out Time]** in the adapter transmitting (producing) peer I/O multiplied by the value of **Parameter 55 - [Peer Out Skip]** in the adapter transmitting (producing) peer I/O.	Default: 10.00 Seconds Minimum: 0.01 Seconds Maximum: 10.00 Seconds Type: Read/Write Reset Required: No
49	**[Peer Inp Enable]** Determines if peer I/O input is on or off.	Default: 0 = Off Values: 0 = Off 1 = On Type: Read/Write Reset Required: No
50	**[Peer Inp Status]** Displays the status of the consumed peer I/O input connection.	Default: 0 = Off Values: 0 = Off 1 = Waiting 2 = Running 3 = Faulted Type: Read Only

Parameter No.	Name and Description	Details
51 52	**[Peer A Output]** **[Peer B Output]** Selects the source of the peer I/O output data. The adapter transmits this data to the network. **Important:** Changes to these parameters are ignored when **Parameter 53 - [Peer Out Enable]** is set to '1' (On).	Default: 0 = Off Default: 0 = Off Values: 0 = Off 1 = Cmd/Ref 2 = Datalink A Input 3 = Datalink B Input 4 = Datalink C Input 5 = Datalink D Input 6 = Datalink A Output 7 = Datalink B Output 8 = Datalink C Output 9 = Datalink D Output Type: Read/Write Reset Required: No
53	**[Peer Out Enable]** Determines if peer I/O output is on or off.	Default: 0 = Off Values: 0 = Off 1 = On Type: Read/Write Reset Required: No
54	**[Peer Out Time]** Sets the minimum time that an adapter will wait when transmitting data to a peer. **Important:** Changes to these parameters are ignored when **Parameter 53 - [Peer Out Enable]** is set to '1' (On).	Default: 10.00 Seconds Minimum: 0.01 Seconds Maximum: 10.00 Seconds Type: Read/Write Reset Required: No
55	**[Peer Out Skip]** Sets the maximum time that an adapter will wait when transmitting data to a peer. The value of **Parameter 54 - [Peer Out Time]** is multiplied by the value of this parameter to set the time. **Important:** Changes to these parameters are ignored when **Parameter 53 - [Peer Out Enable]** is set to '1' (On).	Default: 1 Minimum: 1 Maximum: 16 Type: Read/Write Reset Required: No
56	**[Web Enable]** Displays the setting of the adapter Web Pages Switch (SW2) when the adapter was last reset.	Default: 0 = Disabled Values: 0 = Disabled 1 = Enabled Type: Read Only
57	**[Web Features]** Sets the access to the Web interface and Web configurable email notification feature.	Default: xxxx xxx0 Bit Values: 0 = Disabled 1 = Enabled Type: Read/Write Reset Required: No

Bit Definition	Not Used	Not Used	Not Used	Not Used	Not Used	Not Used	Not Used	E-mail Cfg
Default	x	x	x	x	x	x	x	1
Bit	7	6	5	4	3	2	1	0

Notes:

EtherNet/IP Objects

This appendix presents information about the EtherNet/IP objects that can be accessed using Explicit Messages. For information on the format of Explicit Messages and example ladder logic programs, refer to Chapter 6, Using Explicit Messaging.

Object	Class Code		Page
	Hex.	Dec.	
Identity Object	0x01	1	182
Assembly Object	0x04	4	183
Register Object	0x07	7	184
Parameter Object	0x0F	15	185
Parameter Group Object	0x10	16	188
Device Level Ring Object	0x47	71	189
Quality of Service Object	0x48	72	190
PCCC Object	0x67	103	190

Object	Class Code		Page
	Hex.	Dec.	
DPI Device Object	0x92	146	196
DPI Parameter Object	0x93	147	198
DPI Fault Object	0x97	151	204
DPI Alarm Object	0x98	152	206
DPI Diagnostic Object	0x99	153	207
DPI Time Object	0x9B	155	209
TCP/IP Interface Object	0xF5	245	211
Ethernet Link Object	0xF6	246	213

TIP See the EtherNet/IP specification for more information about EtherNet/IP objects. Information about the EtherNet/IP specification is available on the ODVA web site (http://www.odva.org).

Supported Data Types

Data Type	Description
BOOL	8-bit value -- low bit is true or false
BOOL[n]	Array of n bits
BYTE	8-bit unsigned integer
CONTAINER	32-bit parameter value - sign extended if necessary
DINT	32-bit signed integer
DWORD	32-bit unsigned integer
INT	16-bit signed integer
LWORD	64-bit unsigned integer
REAL	32-bit floating point
SHORT_STRING	1-byte length indicator + that many characters
SINT	8-bit signed integer
STRING[n]	Array of n characters
STRUCT	Structure name only - no size in addition to elements
TCHAR	8 or 16-bit character
UDINT	32-bit unsigned integer
UINT	16-bit unsigned integer
USINT	8-bit unsigned integer
WORD	16-bit unsigned integer

Identity Object

Class Code

Hexadecimal	Decimal
0x01	1

Services

	Implemented for:		
Service Code	Class	Instance	Service Name
0x05	No	Yes	Reset
0x0E	Yes	Yes	Get_Attribute_Single
0x01	Yes	Yes	Get_Attributes_All

Instances

The number of instances depends on the number of components in the device connected to the adapter. This number of components can be read in Instance 0, Attribute 2.

Instance	Description
0	Class
1	Host
2…15	Peripherals on Ports 1…14

Class Attributes

Attribute ID	Access Rule	Name	Data Type	Description
2	Get	Max Instance	WORD	Total number of instances

Instance Attributes

Attribute ID	Access Rule	Name	Data Type	Description
1	Get	Vendor ID	WORD	1 = Allen-Bradley
2	Get	Device Type	WORD	123
3	Get	Product Code	WORD	Number identifying product name and rating
4	Get	Revision: Major Minor	STRUCT of: BYTE BYTE	 Value varies Value varies
5	Get	Status	WORD	Bit 0 = Owned Bit 8 = Minor recoverable fault Bit 10 = Major recoverable fault
6	Get	Serial Number	DWORD	Unique 32-bit number
7	Get	Product Name	SHORT_STRING	Product name and rating
8	Get	State	USINT	Always returns 3 (Operational)
9	Get	Configuration Consistency Value	UINT	For the Host (Instance #1) the CCV is determined from the Host's NVS Checksum along with 20-COMM-ER's NVS Checksum. For DPI Peripherals (Instances 2-15) the CCV is from the peripheral's NVS Checksum only.

Assembly Object

Class Code

Hexadecimal	Decimal
0x04	4

Services

	Implemented for:		
Service Code	Class	Instance	Service Name
0x0E	Yes	Yes	Get_Attribute_Single
0x10	Yes	Yes	Set_Attribute_Single

Instances

Instance	Description
1	All I/O data being read from the DPI device (read-only)
2	All I/O data written to the DPI device (read/write)
191	Input only
192	Listen only

Class Attributes

Attribute ID	Access Rule	Name	Data Type	Description
1	Get	Revision	WORD	2
2	Get	Max Instance	WORD	2
100	Set	Control Timeout	WORD	Control timeout in seconds

Instance Attributes

Attribute ID	Access Rule	Name	Data Type	Description
1	Get	Number of Members	WORD	1
2	Get	Member List	ARRAY of STRUCT: WORD WORD Packed EPATH	 Size of member data Size of member path Member path
3	Conditional [1]	Data	Array of Bits	Data to be transferred
4	Get	Size	WORD	Size of assembly data in bits

(1) For instance 1, access rule for the data attribute is Get. For instance 2, it is Get/Set.

Important: Setting an assembly object attribute can be done only when the Control Timeout (class attribute 100) has been set to a non-zero value.

Register Object

Class Code

Hexadecimal	Decimal
0x07	7

Services

Service Code	Implemented for:		Service Name
	Class	Instance	
0x0E	Yes	Yes	Get_Attribute_Single
0x10	Yes	Yes	Set_Attribute_Single

Instances

Instance	Description
1	All I/O data being read from the DPI device (read-only)
2	All I/O data written to the DPI device (read/write)
3	Logic Status and Feedback data (read-only)
4	Logic Command and Reference data (read/write)
5	Datalink A (input data from device to scanner) (read only)
6	Datalink A (output data from scanner to device) (read/write)
7	Datalink B (input data from device to scanner) (read only)
8	Datalink B (output data from scanner to device) (read/write)
9	Datalink C (input data from device to scanner) (read only)
10	Datalink C (output data from scanner to device) (read/write)
11	Datalink D (input data from device to scanner) (read only)
12	Datalink D (output data from scanner to device) (read/write)
13	Logic Status and Feedback Data (read-only)
14	Mask [1] (read/write)
15	Logic Status (read-only)
16	Logic Command (read/write)
17	Feedback (read-only)
18	Reference (read/write)

(1) The mask command word is set to the value of the first word of the data where there are ones in the second word of the data. Command = (word 1 and not word 2) or (word 1 and word 2). This only controls specified bits in the Logic Command data to the DPI product and does not change the Reference value.

Class Attributes

Attribute ID	Access Rule	Name	Data Type	Description
100	Set	Control Timeout	WORD	Control timeout in seconds

Instance Attributes

Attribute ID	Access Rule	Name	Data Type	Description
1	Get	Bad Flag	BOOL	If set to 1, then attribute 4 may contain invalid data. 0 = good 1 = bad
2	Get	Direction	BOOL	Direction of data transfer 0 = Producer Register (drive to network) 1 = Consumer Register (network to drive)
3	Get	Size	WORD	Size of register data in bits
4	Conditional (1)	Data	ARRAY of BITS	Data to be transferred

(1) For this attribute, the Access Rule is Get if Direction = 0. The Access Rule is Set if Direction = 1.

Important: Setting a Register object attribute can be done only when the Control Timeout (class attribute 100) has been set to a non-zero value.

Parameter Object

Class Code

Hexadecimal	Decimal
0x0F	15

Services

Service Code	Implemented for:		Service Name
	Class	Instance	
0x01	Yes	Yes	Get_Attributes_All
0x05	Yes	No	Reset
0x0E	Yes	Yes	Get_Attribute_Single
0x10	Yes	Yes	Set_Attribute_Single
0x4B	No	Yes	Get_Enum_String

Instances

The number of instances depends on the number of parameters in the DPI drive. The adapter parameters are appended to the list of drive parameters. The total number of parameters can be read in Instance 0, Attribute 2.

Instance	Description
0	Class Attributes
1	Drive Parameter 1 Attributes
⋮	⋮
n	Last Drive Parameter n Attributes (1)
n + 1	Adapter Parameter 1 Attributes
⋮	⋮
n + m	Last Adapter Parameter m Attributes (2)

(1) n represents the number of parameters in the drive.

(2) m represents the number of parameters in the adapter.

Class Attributes

Attribute ID	Access Rule	Name	Data Type	Description
1	Get	Revision	WORD	1
2	Get	Max Instance	WORD	Number of parameters
8	Get	Parameter Class Descriptor	WORD	0 = False, 1 = True Bit 0 = Supports parameter instances Bit 1 = Supports full attributes Bit 2 = Must do NVS save command Bit 3 = Parameters are stored in NVS
9	Get	Configuration Assembly Instance	WORD	0
10	Set	Native Language	BYTE	0 = English 1 = French 2 = Spanish 3 = Italian 4 = German 5 = Japanese 6 = Portuguese 7 = Mandarin Chinese 8 = Russian 9 = Dutch

Instance Attributes

Attribute ID	Access Rule	Name	Data Type	Description
1	(1)	Parameter Value	(2)	(3)
2	Get	Link Path Size	BYTE	0 = No link specified n = The size of Attribute 3 in bytes
3	Get	Link Path		(4)
4	Get	Descriptor	WORD	0 = False, 1 = True Bit 1 = Supports ENUMs Bit 2 = Supports scaling Bit 3 = Supports scaling links Bit 4 = Read only Bit 5 = Monitor Bit 6 = Extended precision scaling
5	Get	Data Type	BYTE	1 = WORD (16-bit) 2 = UINT (16-bit) 3 = INT (16-bit) 5 = SINT 6 = DINT 8 = USINT 9 = UDINT 11 = REAL 22 = SHORT_STRING 24 = BYTE 25 = DWORD
6	Get	Data Size	BYTE	(3)
7	Get	Parameter Name String	SHORT_STRING	(3)
8	Get	Units String	SHORT_STRING	(3)
9	Get	Help String	SHORT_STRING	Null string
10	Get	Minimum Value	(2)	(3)
11	Get	Maximum Value	(2)	(3)
12	Get	Default Value	(2)	(3)
13	Get	Scaling Multiplier	WORD	(3)
14	Get	Scaling Divisor	WORD	(3)
15	Get	Scaling Base	WORD	(3)
16	Get	Scaling Offset	WORD	(3)
17	Get	Multiplier Link	WORD	(3)
18	Get	Divisor Link	WORD	(3)
19	Get	Base Link	WORD	(3)
20	Get	Offset Link	WORD	(3)
21	Get	Decimal Precision	BYTE	(3)

(1) Access rule is defined in Bit 4 of instance attribute 4 (0 = Get/Set, 1 = Get).

(2) Specified in descriptor, data type, and data size.

(3) Value varies based on parameter instance.

(4) See the EtherNet/IP specification for a description of the link path.

Parameter Group Object

Class Code

Hexadecimal	Decimal
0x10	16

Services

Service Code	Implemented for:		Service Name
	Class	Instance	
0x0E	Yes	Yes	Get_Attribute_Single
0x10	Yes	No	Set_Attribute_Single

Instances

The number of instances depends on the number of groups in the device. A group of adapter parameters is appended to the list of groups in the device. The total number of groups can be read in Instance 0, Attribute 2.

Number	Description
0	Class Attributes
1	Drive Group 1 Attributes
⋮	⋮
n	Last Drive Group Attributes
n + 1	Adapter Group Attributes

Class Attributes

Attribute ID	Access Rule	Name	Data Type	Description
1	Get	Parameter group version	WORD	1
2	Get	Max Instance	WORD	Total number of groups
8	Set	Native Language	BYTE	0 = English 1 = French 2 = Spanish 3 = Italian 4 = German 5 = Japanese 6 = Portuguese 7 = Mandarin Chinese 8 = Russian 9 = Dutch

Instance Attributes

Attribute ID	Access Rule	Name	Data Type	Description
1	Get	Group Name String	SHORT_STRING	Group name
2	Get	Number of Members in Group	WORD	Number of parameters in group
3	Get	1st Parameter Number in Group	WORD	(1)
4	Get	2nd Parameter Number in Group	WORD	(1)
n	Get	⋮	WORD	(1)

(1) Value varies based on group instance.

Device Level Ring Object

Class Code

Hexadecimal	Decimal
0x0047	71

Services

The following common services will be implemented for the DLR Object.

Service Code	Implemented for:		Service Name
	Class	Instance	
0x01	No	Yes	Get_Attributes_All
0x0E	Yes	Yes	Get_Attribute_Single

Instances

Get_Attribute_ALL is implemented for instances and Get_Attribute_Single for both class and instance.

The adapter supports one instance of the TCP/IP Interface object.

Number	Description
0	Class Attributes
1	Object Attributes

Class Attributes

The following class attributes will be supported for the DLR Object:

Attribute ID	Access Rule	Name	Data Type	Description
1	Get	Revision	UNIT	2

Instance Attributes

A single instance (instance 1) will be supported.

Attribute ID	Access Rule	Name	Data Type	Description
1	Get	Network Topology	USINT	0 = Linear 1 = Ring
2	Get	Network Status	USINT	0 = Normal 1 = Ring Fault 2 = Unexpected Loop Detect 3 = Partial Network Fault 4 = Rapid Fault/Restore Cycle
10	Get	Active Supervisor Address	STRUCT of: UDINT Array of 6 USINT	Ring supervisor
12	Get	Capability Flags	DWORD	0x00000002

Quality of Service Object

Class Code

Hexadecimal	Decimal
0x0048	72

Services

Service Code	Implemented for:		Service Name
	Class	Instance	
0x0E	Yes	Yes	Get_Attribute_Single
0x10	No	Yes	Set_Attribute_Single

Instances

Get_Attribute_Single is implemented on both class and instance. Set_Attribute_Single is implemented on instances. Get_Attribute_All is not implemented

The adapter supports one instance of the TCP/IP Interface object.

Number	Description
0	Class Attributes
1	Object Attributes

Class Attributes

Attribute ID	Access Rule	Name	Data Type	Value
1	Get	Revision	UINT	1

Instance Attributes

Attribute ID	Access Rule	Name	Data Type	Description
1	Set	802.1Q Tag Enable	USINT	0 = Disable (default) 1 = Enable
4	Set	DSCP Urgent	USINT	Default = 55
5	Set	DSCP Scheduled	USINT	Default = 47
6	Set	DSCP High	USINT	Default = 43
7	Set	DSCP Low	USINT	Default = 31
8	Set	DSCP Explici	USINT	Default = 27

PCCC Object

Class Code

Hexadecimal	Decimal
0x67	103

Services

Service Code	Implemented for:		Service Name
	Class	Instance	
0x4B	No	Yes	Execute_PCCC
0x4C	No	Yes	Execute_DH+

Instances

Supports Instance 1.

Class Attributes

Not supported.

Instance Attributes

Not supported.

Message Structure for Execute_PCCC

Request		
Name	**Data Type**	**Description**
Length	USINT	Length of requestor ID
Vendor	UINT	Vendor number of requestor
Serial Number	UDINT	ASA serial number of requestor
Other	Product Specific	Identifier of user, task, etc. on the requestor
CMD	USINT	Command byte
STS	USINT	0
TNSW	UINT	Transport word
FNC	USINT	Function code; not used for all CMDs.
PCCC_ params	ARRAY of USINT	CMD/FNC specific parameters

Response		
Name	**Data Type**	**Description**
Length	USINT	Length of requestor ID
Vendor	UINT	Vendor number of requestor
Serial Number	UDINT	ASA serial number of requestor
Other	Product Specific	Identifier of user, task, etc. on the requestor
CMD	USINT	Command byte
STS	USINT	Status byte
TNSW	UINT	Transport word. Same value as the request.
EXT_STS	USINT	Extended status; not used for all CMDs.
PCCC_ results	ARRAY of USINT	CMD/FNC specific result data

Message Structure for Execute_DH+

Request		
Name	**Data Type**	**Description**
DLink	UINT	Destination Link ID
DSta	USINT	Destination Station number
DUser	USINT	Destination “User” number
SLink	UINT	Source Link ID
SSta	USINT	Source Station number
SUser	USINT	Source User number
CMD	USINT	Command byte
STS	USINT	0
TNSW	UINT	Transport word
FNC	USINT	Function code; not used for all CMDs
PCCC_ params	ARRAY of USINT	CMD/FNC specific parameters

Response		
Name	**Data Type**	**Description**
DLink	UINT	Destination Link ID
DSta	USINT	Destination Station number
DUser	USINT	Destination “User” number
SLink	UINT	Source Link ID
SSta	USINT	Source Station number
SUser	USINT	Source User number
CMD	USINT	Command byte
STS	USINT	Status byte
TNSW	UINT	Transport word. Same value as the request.
EXT_STS	USINT	Extended status; not used for all CMDs
PCCC_ results	ARRAY of USINT	CMD/FNC specific result data

The adapter supports the following PCCC command types:

CMD	FNC	Description
0x06	0x03	Identify host and some status
0x0F	0x67	PLC-5 typed write
0x0F	0x68	PLC-5 typed read
0x0F	0x95	Encapsulate other protocol
0x0F	0xA2	SLC 500 protected typed read with 3 address fields
0x0F	0xAA	SLC 500 protected typed write with 3 address fields
0x0F	0xA1	SLC 500 protected typed read with 2 address fields
0x0F	0xA9	SLC 500 protected typed write with 2 address fields
0x0F	0x00	Word range read
0x0F	0x01	Word range write

For more information regarding PCCC commands, see DF1 Protocol and Command Set Manual, publication 1770-6.5.16.

N-Files

<table>
<tr><th>N-File</th><th colspan="4">Description</th></tr>
<tr><td>N40</td><td colspan="4">This N-file lets you use Emulated Block Transfer messages to read and write many types of DPI messages. To use Emulated Block Transfer messages, you send a Write message to N40:0…N40:63, wait until the adapter responds with a reply message, and then read the response data in N40:0…N40:63 with a Read message.

For details about Block Transfer messages and the data required for each byte in the N-File, see the Remote I/O Adapter User Manual, publication 20COMM-UM004.

Bits 15…8 are the Most Significant Byte. Bits 7…0 are the Least Significant Byte.</td></tr>
<tr><td></td><td colspan="2">Write</td><td colspan="2">Read</td></tr>
<tr><td>Bits</td><td>15</td><td>0</td><td>15</td><td>0</td></tr>
<tr><td>N40:0</td><td>0x00</td><td>Length (in Bytes)</td><td>0x00</td><td>Length (in Bytes)</td></tr>
<tr><td>N40:1</td><td>DPI Port</td><td>0x81</td><td>Status Size</td><td>Status Type</td></tr>
<tr><td>N40:2</td><td>0x00</td><td>CIP Service</td><td colspan="2" rowspan="5">Data
(length varies based on message)</td></tr>
<tr><td>N40:3</td><td colspan="2">CIP Class</td></tr>
<tr><td>N40:4</td><td colspan="2">CIP Instance</td></tr>
<tr><td>N40:5</td><td colspan="2">CIP Attribute</td></tr>
<tr><td>N40:6
⋮
N40:63</td><td colspan="2">Data
(length varies based on message)</td></tr>
<tr><td>N41</td><td colspan="4">This N-file lets you read and write control I/O messages. You can write control I/O messages only when all of the following conditions are true:
The adapter is not receiving I/O from a scanner. For example, there is no scanner on the network, the scanner is in idle (program) mode, the scanner is faulted, or the adapter is not mapped to the scanner.
The adapter is not receiving peer I/O from another adapter.
The value of N42:3 is set to a non-zero value.</td></tr>
<tr><td></td><td colspan="2">Write</td><td colspan="2">Read</td></tr>
</table>

N-File	Description	
N41:0	Logic Command Word	Logic Status Word
N41:1	Reference (least significant word)	Feedback (least significant word)
N41:2	Reference (most significant word)	Feedback (most significant word)
N41:3	Datalink A1 (least significant word)	Datalink A1 (least significant word)
N41:4	Datalink A1 (most significant word)	Datalink A1 (most significant word)
N41:5	Datalink A2 (least significant word)	Datalink A2 (least significant word)
N41:6	Datalink A2 (most significant word)	Datalink A2 (most significant word)
N41:7	Datalink B1 (least significant word)	Datalink B1 (least significant word)
N41:8	Datalink B1 (most significant word)	Datalink B1 (most significant word)
N41:9	Datalink B2 (least significant word)	Datalink B2 (least significant word)
N41:10	Datalink B2 (most significant word)	Datalink B2 (most significant word)
N41:11	Datalink C1 (least significant word)	Datalink C1 (least significant word)
N41:12	Datalink C1 (most significant word)	Datalink C1 (most significant word)
N41:13	Datalink C2 (least significant word)	Datalink C2 (least significant word)
N41:14	Datalink C2 (most significant word)	Datalink C2 (most significant word)
N41:15	Datalink D1 (least significant word)	Datalink D1 (least significant word)
N41:16	Datalink D1 (most significant word)	Datalink D1 (most significant word)
N41:17	Datalink D2 (least significant word)	Datalink D2 (least significant word)
N41:18	Datalink D2 (most significant word)	Datalink D2 (most significant word)
N42	This N-file lets you read and write some values configuring the port.	
N42:3	Time-out (read/write): Time (in seconds) allowed between messages to the N41 file. If the adapter does not receive a message in the specified time, it performs the fault action configured in its [Comm Flt Action] parameter. A valid setting is between 1 and 32767 seconds (5. . . 20 seconds is recommended).	
N42:7	Adapter Port Number (read only): DPI port on the drive to which the adapter is connected.	
N42:8	Peer Adapters (read only): Bit field of devices having DPI Peer capabilities.	

N45	This N-file lets you read and write control I/O messages. You can write control I/O messages only when all of the following conditions are true: The adapter is not receiving I/O from a scanner. For example, there is no scanner on the network, the scanner is in idle (program) mode, the scanner is faulted, or the adapter is not mapped to the scanner. The adapter is not receiving peer I/O from another adapter. The value of N42:3 is set to a non-zero value.	
	Write	*Read*
N45:0	Logic Command (least significant)	Logic Status (least significant)
N45:1	Logic Command (most significant)	Logic Status (most significant)
N45:2	Reference (least significant)	Feedback (least significant)
N45:3	Reference (most significant)	Feedback (most significant)
N45:4	DL From Net 01 (least significant)	DL To Net 01 (least significant)
N45:5	DL From Net 01 (most significant)	DL To Net 01 (most significant)
N45:6	DL From Net 02 (least significant)	DL To Net 02 (least significant)
N45:7	DL From Net 02 (most significant)	DL To Net 02 (most significant)
N45:8	DL From Net 03 (least significant)	DL To Net 03 (least significant)
N45:9	DL From Net 03 (most significant)	DL To Net 03 (most significant)
N45:10	DL From Net 04 (least significant)	DL To Net 04 (least significant)
N45:11	DL From Net 04 (most significant)	DL To Net 04 (most significant)
N45:12	DL From Net 05 (least significant)	DL To Net 05 (least significant)
N45:13	DL From Net 05 (most significant)	DL To Net 05 (most significant)
N45:14	DL From Net 06 (least significant)	DL To Net 06 (least significant)
N45:15	DL From Net 06 (most significant)	DL To Net 06 (most significant)
N45:16	DL From Net 07 (least significant)	DL To Net 07 (least significant)
N45:17	DL From Net 07 (most significant)	DL To Net 07 (most significant)
N45:18	DL From Net 08 (least significant)	DL To Net 08 (least significant)
N45:19	DL From Net 08 (most significant)	DL To Net 08 (most significant)
N45:20	DL From Net 09 (least significant)	DL To Net 09 (least significant)
N45:21	DL From Net 09 (most significant)	DL To Net 09 (most significant)
N45:22	DL From Net 10 (least significant)	DL To Net 10 (least significant)
N45:23	DL From Net 10 (most significant)	DL To Net 10 (most significant)
N45:24	DL From Net 11 (least significant)	DL To Net 11 (least significant)
N45:25	DL From Net 11 (most significant)	DL To Net 11 (most significant)
N45:26	DL From Net 12 (least significant)	DL To Net 12 (least significant)
N45:27	DL From Net 12 (most significant)	DL To Net 12 (most significant)
N45:28	DL From Net 13 (least significant)	DL To Net 13 (least significant)
N45:29	DL From Net 13 (most significant)	DL To Net 13 (most significant)
N45:30	DL From Net 14 (least significant)	DL To Net 14 (least significant)
N45:31	DL From Net 14 (most significant)	DL To Net 14 (most significant)
N45:32	DL From Net 15 (least significant)	DL To Net 15 (least significant)
N45:33	DL From Net 15 (most significant)	DL To Net 15 (most significant)
N45:34	DL From Net 16 (least significant)	DL To Net 16 (least significant)
N45:35	DL From Net 16 (most significant)	DL To Net 16 (most significant)

Important: If your controller or HMI platform supports CIP messaging, use the CIP Parameter object to get and set parameters.

N-File	Description
N150…N199	These N-files let you read and write parameter values in DPI Port 0 (the host PowerFlex drive) as 32-bit double words. You can interpret the data in various ways (for example, 32-bit real, 32-bit integer) To read a parameter, you need to send a message with two elements. For example, to read parameter 1, read two elements beginning at N150:2. As another example, to read parameters 2…6, read ten elements beginning at N150:4.
N150:0…1	Number of parameters in the drive
N150:2…249	Drive parameters 1…124
N151:0…249	Drive parameters 125…249
N152:0…249	Drive parameters 250…374
N153:0…249	Drive parameters 375…499
⋮	⋮
N199:0…249	Drive parameters 6125…6249

N-File	Description
N201…N212	These N-files let you read and write values to DPI and Host parameters in Ports 1…14 (for example, a HIM or adapter) as 32-bit double words. You can interpret the data in various ways (for example, 32-bit real, 32-bit integer) To read a parameter, you need to send a message with two elements. For example, to read parameter 1 in the peripheral connected to DPI port 1, read two elements beginning at N201:2. As another example, to read parameters 2…6 in the peripheral connected to DPI port 5 (the adapter), read ten elements beginning at N209:4.
N201:0…1	Number of parameters in the DPI peripheral at DPI port 1
N201:2…249	Parameters 1…124 in the DPI peripheral at DPI port 1
N202:0…249	Parameters 125…249 in the DPI peripheral at DPI port 1
N203:0…1	Number of parameters in the DPI peripheral at DPI port 2
N203:2…249	Parameters 1…124 in the DPI peripheral at DPI port 2
N204:0…249	Parameters 125…249 in the DPI peripheral at DPI port 2
N205:0…1	Number of parameters in the DPI peripheral at DPI port 3
N205:2…249	Parameters 1…124 in the DPI peripheral at DPI port 3
N206:0…249	Parameters 125…249 in the DPI peripheral at DPI port 3
N207:0…1	Number of parameters in the DPI peripheral at DPI port 4
N207:2…249	Parameters 1…124 in the DPI peripheral at DPI port 4
N208:0…249	Parameters 125…249 in the DPI peripheral at DPI port 4
N209:0…1	Number of parameters in the DPI peripheral at DPI port 5
N209:2…249	Parameters 1…124 in the DPI peripheral at DPI port 5
N210:0…249	Parameters 125…249 in the DPI peripheral at DPI port 5
N211:0…1	Number of parameters in the DPI peripheral at DPI port 6
N211:2…249	Parameters 1…124 in the DPI peripheral at DPI port 6
N212:0…249	Parameters 125…249 in the DPI peripheral at DPI port 6
The following N-Files are supported only when the adapter is used with a PowerFlex 750-Series drive.	
N213:0…1	Number of parameters in the DPI peripheral at DPI port 7
N213:2…249	Parameters 1…124 in the DPI peripheral at DPI port 7
N214:0…249	Parameters 125…249 in the DPI peripheral at DPI port 7
N215:0…1	Number of parameters in the DPI peripheral at DPI port 8
N215:2…249	Parameters 1…124 in the DPI peripheral at DPI port 8
N216:0…249	Parameters 125…249 in the DPI peripheral at DPI port 8
N217:0…1	Number of parameters in the DPI peripheral at DPI port 9
N217:2…249	Parameters 1…124 in the DPI peripheral at DPI port 9
N218:0…249	Parameters 125…249 in the DPI peripheral at DPI port 9
N219:0…1	Number of parameters in the DPI peripheral at DPI port 10
N219:2…249	Parameters 1…124 in the DPI peripheral at DPI port 10
N220:0…249	Parameters 125…249 in the DPI peripheral at DPI port 10
N221:0…1	Number of parameters in the DPI peripheral at DPI port 11
N221:2…249	Parameters 1…124 in the DPI peripheral at DPI port 11
N222:0…249	Parameters 125…249 in the DPI peripheral at DPI port 11
N223:0…1	Number of parameters in the DPI peripheral at DPI port 12
N223:2…249	Parameters 1…124 in the DPI peripheral at DPI port 12
N224:0…249	Parameters 125…249 in the DPI peripheral at DPI port 12
N225:0…1	Number of parameters in the DPI peripheral at DPI port 13
N225:2…249	Parameters 1…124 in the DPI peripheral at DPI port 13
N226:0…249	Parameters 125…249 in the DPI peripheral at DPI port 13
N227:0…1	Number of parameters in the DPI peripheral at DPI port 14
N227:2…249	Parameters 1…124 in the DPI peripheral at DPI port 14
N228:0…249	Parameters 125…249 in the DPI peripheral at DPI port 14

DPI Device Object

Class Code

Hexadecimal	Decimal
0x92	146

Services

Service Code	Implemented for:		Service Name
	Class	Instance	
0x0E	Yes	Yes	Get_Attribute_Single
0x10	Yes	Yes	Set_Attribute_Single

Instances

The number of instances depends on the number of components in the device. The total number of components can be read in Instance 0, Class Attribute 4.

Instances (Hex.)	(Dec.)	Device
0x0000…0x3FFF	0…16383	Host
0x4000…0x43FF	16384…17407	Adapter
0x4400…0x47FF	17408…18431	DPI Port 1
0x4800…0x4BFF	18432…19455	DPI Port 2
0x4C00…0x4FFF	19456…20479	DPI Port 3
0x5000…0x53FF	20480…21503	DPI Port 4
0x5400…0x57FF	21504…22527	DPI Port 5
0x5800…0x5BFF	22528…23551	DPI Port 6
0x5C00…0x5FFF (1)	22552…24575	DPI Port 7
0x6000…0x63FF (1)	24576…25599	DPI Port 8
0x6400…0x67FF (1)	25600…26623	DPI Port 9
0x6800…0x6BFF (1)	26624…27647	DPI Port 10
0x6C00…0x6FFF (1)	27648…28671	DPI Port 11
0x7000…0x73FF (1)	28672…29695	DPI Port 12
0x7400…0x77FF (1)	29696…30719	DPI Port 13
0x7800…0x7BFF (1)	30720…31743	DPI Port 14

Example	Description
0	Class Attributes (Drive)
1	Drive Component 1
2	Drive Component 2
⋮	⋮
16384	Class Attributes (Adapter)
16385	Adapter Component 1
⋮	⋮

(1) These instances are supported only when the adapter is used with a PowerFlex 750-Series drive.

Class Attributes

Attribute ID	Access Rule	Name	Data Type	Description
0	Get	Family Code	BYTE	0x00 = DPI Peripheral 0x30 = PowerFlex 70 0x34 = PowerFlex 700H 0x38, 0x39, or 0x3A= PowerFlex 700 0x40 = PowerFlex 7000 0x48, 0x49, or 0x4A = PowerFlex 700S 0x5A = SMC Flex 0x68, 0x69, or 0x6A = PowerFlex 700VC 0x90 = PowerFlex 753/755 0xA0 = 20-750-xxx Option Module 0xFF = HIM
1	Get	Family Text	STRING[16]	Text identifying the device.

Attribute ID	Access Rule	Name	Data Type	Description
2	Set	Language Code	BYTE	0 = English 1 = French 2 = Spanish 3 = Italian 4 = German 5 = Japanese 6 = Portuguese 7 = Mandarin Chinese 8 = Russian 9 = Dutch
3	Get	Product Series	BYTE	1 = A 2 = B …
4	Get	Number of Components	BYTE	Number of components (for example, main control board, I/O boards, and so forth) in the device.
5	Set	User Definable Text	STRING[16]	Text identifying the device with a user-supplied name.
6	Get	Status Text	STRING[12]	Text describing the status of the device.
7	Get	Configuration Code	BYTE	Identification of variations.
8	Get	Configuration Text	STRING[16]	Text identifying a variation of a family device.
9	Get	Brand Code	WORD	0x0001 = Allen-Bradley
11	Get	NVS Checksum	WORD	Checksum of the Non-Volatile Storage in a device.
12	Get	Class Revision	WORD	2 = DPI
13	Get	Character Set Code	BYTE	0 = SCANport HIM 1 = ISO 8859-1 (Latin 1) 2 = ISO 8859-2 (Latin 2) 3 = ISO 8859-3 (Latin 3) 4 = ISO 8859-4 (Latin 4) 5 = ISO 8859-5 (Cyrillic) 6 = ISO 8859-6 (Arabic) 7 = ISO 8859-7 (Greek) 8 = ISO 8859-8 (Hebrew) 9 = ISO 8859-9 (Turkish) 10 = ISO 8859-10 (Nordic) 255 = ISO 10646 (Unicode)
14	Get	Product Option Support	BOOL[64]	
15	Get	Languages Supported	STRUCT of: BYTE BYTE[n]	 Number of Languages Language Codes (see Class Attribute 2)
16	Get	Date of Manufacture	STRUCT of: WORD BYTE BYTE	 Year Month Day
17	Get	Product Revision	STRUCT of: BYTE BYTE	 Major Firmware Release Minor Firmware Release
18	Get	Serial Number	DWORD	Value between 0x00000000 and 0xFFFFFFFF
19	Set	Language Selected	BYTE	0 = Default (HIM will prompt at start up) 1 = Language was selected (no prompt)
20	Set	Customer-Generated Firmware	STRING[36]	GUID (Globally Unique Identifier) identifying customer firmware flashed into the device.
30	Get	International Status Text	STRINGN	Text describing the status of device with support for Unicode.
31	Get/Set	International User Definable Text	STRINGN	Text identifying the device with a user-supplied name with support for Unicode.

Attribute ID	Access Rule	Name	Data Type	Description
34	Get	Key Information	STRUCT of: DWORD DWORD WORD WORD WORD BYTE BYTE BYTE BYTE BYTE BYTE[16]	 Rating Code Device Serial Number Customization Code Customization Revision Brand Code Family Code Config Code Language Code Major Revision Minor Revision Customer-Generated Firmware UUID
35	Get	NVS CRC	DWORD	A 32-bit CRC of the Non-Volatile Storage in a device.
39	Get	SI Driver Code	WORD	Code identifying the protocol between the device and host.
128	Get	Customization Code	WORD	Code identifying the customized device.
129	Get	Customization Revision Number	WORD	Revision of the customized device.
130	Get	Customization Device Text	STRING[32]	Text identifying the customized device.

Instance Attributes

Attribute ID	Access Rule	Name	Data Type	Description
3	Get	Component Name	STRING[32]	Name of the component
4	Get	Component Firmware Revision	STRUCT of: BYTE BYTE	 Major Revision Minor Revision
8	Get	Component Serial Number	DWORD	Value between 0x00000000 and 0xFFFFFFFF
9	Get	International Component Name	STRINGN	Name of the component with support for Unicode.

DPI Parameter Object

Class Code

Hexadecimal	Decimal
0x93	147

To access 'Host Config' parameters, use the HOST DPI Parameter Object (Class code 0x9F).

Instances

The number of instances depends on the number of parameters in the device. The total number of parameters can be read in Instance 0, Attribute 0.

Instances (Hex.)	(Dec.)	Device
0x0000…0x3FFF	0…16383	Host
0x4000…0x43FF	16384…17407	Adapter
0x4400…0x47FF	17408…18431	DPI Port 1
0x4800…0x4BFF	18432…19455	DPI Port 2
0x4C00…0x4FFF	19456…20479	DPI Port 3
0x5000…0x53FF	20480…21503	DPI Port 4
0x5400…0x57FF	21504…22527	DPI Port 5
0x5800…0x5BFF	22528…23551	DPI Port 6
0x5C00…0x5FFF (1)	23552…24575	DPI Port 7
0x6000…0x63FF (1)	24576…25599	DPI Port 8
0x6400…0x67FF (1)	25600…26623	DPI Port 9

Example	Description
0	Class Attributes (Drive)
1	Drive Parameter 1 Attributes
2	Drive Parameter 2 Attributes
⋮	⋮
16384	Class Attributes (Adapter)
16385	Adapter Parameter 1 Attributes
⋮	⋮

Instances (Hex.)	(Dec.)	Device
0x6800…0x6BFF (1)	26624…27647	DPI Port 10
0x6C00…0x6FFF (1)	27648…28671	DPI Port 11
0x7000…0x73FF (1)	28672…29695	DPI Port 12
0x7400…0x77FF (1)	29696…30719	DPI Port 13
0x7800…0x7BFF (1)	30720…31743	DPI Port 14

Example	Description

(1) These instances are supported only when the adapter is used with a PowerFlex 750-Series drive.

Class Attributes

Attribute ID	Access Rule	Name	Data Type	Description
0	Get	Number of Instances	WORD	Number of parameters in the device
1	Set	Write Protect Password	WORD	0 = Password disabled n = Password
2	Set	NVS Command Write	BYTE	0 = No Operation 1 = Store values in active memory to NVS 2 = Load values in NVS to active memory 3 = Load default values to active memory
3	Get	NVS Parameter Value Checksum	WORD	Checksum of all parameter values in a user set in NVS
4	Get	NVS Link Value Checksum	WORD	Checksum of parameter links in a user set in NVS
5	Get	First Accessible Parameter	WORD	First parameter available if parameters are protected by passwords. A '0' indicates all parameters are protected.
7	Get	Class Revision	WORD	2 = DPI
8	Get	First Parameter Processing Error	WORD	The first parameter that has been written with a value outside of its range. A '0' indicates no errors.
9	Set	Link Command	BYTE	0 = No Operation 1 = Clear All Parameter Links (This does not clear links to function blocks.)

Instance Attributes

Attribute ID	Access Rule	Name	Data Type	Description
6	Get	DPI Offline Read Full	STRUCT of: BOOL[32] CONTAINER CONTAINER CONTAINER STRING[16] STRING[4] WORD WORD WORD WORD WORD WORD BYTE BYTE WORD WORD CONTAINER WORD WORD WORD INT	 Descriptor Offline minimum value Offline maximum value Offline default value Parameter name Offline parameter units Online minimum parameter instance Online maximum parameter instance Online default parameter instance Multiple parameter instance Divisor parameter instance Base parameter instance Offset parameter instance Formula number Pad byte (always zero) Help instance Pad word (always a value of zero) Parameter value Multiplier Divisor Base Offset
7	Get	DPI Online Read Full	STRUCT of: BOOL[32] CONTAINER(1) CONTAINER CONTAINER CONTAINER WORD WORD STRING[4] WORD WORD WORD INT BYTE[3] BYTE STRING[16]	 Descriptor (see page 202) Parameter value Minimum value Maximum value Default value Next parameter Previous parameter Units (for example, Amp, Hz) Multiplier (2) Divisor (2) Base (2) Offset (2) Link (source of the value) (0 = no link) Always zero (0) Parameter name
8	Get	DPI Descriptor	BOOL[32]	Descriptor (see page 202)
9	Get/Set	DPI Parameter Value	Various	Parameter value in NVS. (3)
10	Get/Set	DPI RAM Parameter Value	Various	Parameter value in temporary memory. Valid only for DPI drives.
11	Get/Set	DPI Link	BYTE[3]	Link (parameter or function block that is the source of the value) (0 = no link)
12	Get	Help Object Instance	WORD	ID for help text for this parameter
13	Get	DPI Read Basic	STRUCT of: BOOL[32] CONTAINER CONTAINER CONTAINER CONTAINER STRING[16] STRING[4]	 Descriptor (see page 202) Parameter value Minimum value Maximum value Default value Parameter name Units (for example, Amp, Hz)
14	Get	DPI Parameter Name	STRING[16]	Parameter name
15	Get	DPI Parameter Alias	STRING[16]	Customer supplied parameter name.
16	Get	Parameter Processing Error	BYTE	0 = No error 1 = Value is less than the minimum 2 = Value is greater than the maximum

Attribute ID	Access Rule	Name	Data Type	Description
18	Get	International DPI Offline Parameter Text	STRUCT of: STRINGN STRINGN	 International parameter name International offline units
19	Get	International DPI Online Parameter Text	STRUCT of: STRINGN STRINGN	 International parameter name International offline units
20	Get	International DPI Online Read Full	STRUCT of: BOOL[32] CONTAINER CONTAINER CONTAINER CONTAINER WORD WORD WORD WORD WORD INT BYTE[3] BYTE BOOL[32] STRINGN STRINGN	 Descriptor Parameter value Online minimum value Online maximum value Online default value Next Previous Multiplier Divisor Base Offset Link Pad word (always zero) Extended descriptor International parameter name International online parameter units
21	Get	DPI Extended Descriptor	DWORD	Extended descriptor (see page 203)
22	Get	International DPI Offline Read Full	STRUCT of: BOOL CONTAINER CONTAINER CONTAINER WORD WORD WORD WORD WORD WORD WORD BYTE BYTE WORD WORD CONTAINER WORD WORD WORD INT BOOL[32] STRINGN STRINGN	 Descriptor Offline minimum value Offline maximum value Offline default value Online minimum parameter instance Online maximum parameter instance Online default parameter instance Multiple parameter instance Divisor parameter instance Base parameter instance Offset parameter instance Formula number Pad byte (always zero) Help instance Pad word (always a value of zero) Parameter value Multiplier Divisor Base Offset Extended DPI descriptor International DPI parameter name International DPI offline parameter units

(1) A CONTAINER is a 32-bit block of data that contains the data type used by a parameter value. If signed, the value is sign extended. Padding is used in the CONTAINER to ensure that it is always 32-bits.

(2) This value is used in the formulas used to convert the parameter value between display units and internal units. See Formulas for Converting on page 204.

(3) Do **not** continually write parameter data to NVS. See the attention on page 105.

Descriptor Attributes

Bit	Name	Description
0	Data Type (Bit 1)	Right bit is least significant bit (0). 000 = BYTE used as an array of Boolean 001 = WORD used as an array of Boolean 010 = BYTE (8-bit integer) 011 = WORD (16-bit integer) 100 = DWORD (32-bit integer) 101 = TCHAR (8-bit (not unicode) or 16-bits (unicode) 110 = REAL (32-bit floating point value) 111 = Use bits 16, 17, 18
1	Data Type (Bit 2)	
2	Data Type (Bit 3)	
3	Sign Type	0 = Unsigned 1 = Signed
4	Hidden	0 = Visible 1 = Hidden
5	Not a Link Sink	0 = Parameter can sink a link 1 = Parameter cannot sink a link
6	Not Recallable	0 = Recallable from NVS 1 = Not Recallable from NVS
7	ENUM	0 = No ENUM text 1 = ENUM text
8	Writable	0 = Read only 1 = Read/write
9	Not Writable When Enabled	0 = Writable when enabled (for example, drive running) 1 = Not writable when enabled
10	Instance	0 = Parameter value is not a Reference to another parameter 1 = Parameter value refers to another parameter
11	Uses Bit ENUM Mask	This parameter instance supports the Bit ENUM Mask attribute. For more information, see the definition of the attribute.
12	Decimal Place (Bit 0)	Number of digits to the right of the decimal point. 0000 = 0 1111 = 15
13	Decimal Place (Bit 1)	
14	Decimal Place (Bit 2)	
15	Decimal Place (Bit 3)	
16	Extended Data Type (Bit 4)	Right bit is least significant bit (16). 000 = Reserved 001 = DWORD used as an array of Boolean 010 = Reserved 011 = Reserved 100 = Reserved 101 = Reserved 110 = Reserved 111 = Reserved
17	Extended Data Type (Bit 5)	
18	Extended Data Type (Bit 6)	
19	Parameter Exists	Used to mark parameters that are not available to network tools.
20	Not Used	Reserved
21	Formula Links	Indicates the Formula Data is derived from other parameters.
22	Access Level (Bit 1)	A 3-bit field used to control access to parameter data.
23	Access Level (Bit 2)	
24	Access Level (Bit 3)	
25	Writable ENUM	ENUM text: 0 = Read Only, 1 = Read/Write
26	Not a Link Source	0 = May be the source end of a link 1 = May not be the source end of a link
27	Enhanced Bit ENUM	Parameter supports enhanced bit ENUMs.
28	Enhanced ENUM	Parameter supports enhanced ENUMs.
29	Uses DPI Limits Object	Parameter uses the DPI LImits Object.
30	Extended Descriptor	Parameter uses Extended Descriptor bits, which can be obtained by reading the DPI Extended Descriptor attribute for this parameter.
31	Always Upload/Download	Parameter shall always be included in uploads and downloads.

Extended Descriptor Attributes

Bit	Name	Description
0	Indirect Mode	0 = Analog (selects entire parameters) 1 = Digital (selects individual bits within parameters)
1	Indirect Type 0	Analog input list (Instance 0xFFFF)
2	Indirect Type 1	Digital input list (Instance 0xFFFE)
3	Indirect Type 2	Feedback list (Instance 0xFFFD)
4	Indirect Type 3	Analog output list (Instance 0xFFFC)
5	Indirect Type 4	Digital output list (Instance 0xFFFB)
6	Indirect Type 5	Undefined (Instance 0xFFFA)
7	Indirect Type 6	Undefined (Instance 0xFFF9)
8	Indirect Type 7	Undefined (Instance 0xFFF8)
9	Indirect Type 8	Undefined (Instance 0xFFF7)
10	Indirect Type 9	Undefined (Instance 0xFFF6)
11	Indirect Type 10	Undefined (Instance 0xFFF5)
12	Indirect Type 11	Undefined (Instance 0xFFF4)
13	Indirect Type 12	Undefined (Instance 0xFFF3)
14	Indirect Type 13	Undefined (Instance 0xFFF2)
15	Indirect Type 14	Parameter-specific list
16	FP Max Decimals Bit 0	These four bits are used on REAL parameters only. They indicate the maximum number of decimal places to be displayed for small values. A value of 0 indicates to not limit the number of decimal places used.
17	FP Max Decimals Bit 1	
18	FP Max Decimals Bit 2	
19	FP Max Decimals Bit 1	
20	Extended Parameter Reference	0 = Not an Extended Parameter Reference 1 = Extended Parameter Reference An Extended Parameter Reference contains a reference to another parameter. The value is formatted the same as an analog mode Indirect Selector parameter (SSpppp, where SS = slot number of device to which this Extended Parameter Reference is pointing, and pppp = number of the parameter or diagnostic item to which this Extended Parameter Reference is pointing). Note that an Extended Parameter Reference can only select parameters unlike an Indirect Selector. An Extended Parameter Reference could be used to configure a Datalink or show the source of a Reference (among other uses).
21	Uses Rating Table Object	This parameter has rating-dependent defaults and limits that can be obtained from the Rating Table Object. The Offline Read Full will include the default value for the smallest rating and limits that will accommodate the full range of values allowed in the family of devices using this particular combination of Family Code and Config Code. The Online Read Full will include the rating-dependent default and limit values for this particular combination of Family Code, Config Code, and Rating Code.
22	Writable Referenced Parameter	This bit must be zero unless the parameter is an Extended Parameter Reference. If the parameter is an Extended Parameter Reference, then: 0 = The referenced parameter may be read-only or writable. 1 = The referenced parameter must always be writable (including while running).
23	Disallow Zero	This bit must be zero unless the parameter is an Indirect Selector or Extended Parameter Reference. If the parameter is an Indirect Selector or Extended Parameter Reference, then: 0 = Allow zero 1 = Disallow zero If this bit is cleared (indicating that a value of zero is allowed), the device must support the 'Zero Text' parameter attribute so that a software tool or HIM can obtain text from the Zero Text parameter attribute. If this bit is set (indicating that a value of zero is disallowed), a software tool or HIM will not allow the user to enter a value of zero.
24	Datalink Out	This bit is used by offline tools and indicates that this is a Datalink Out parameter. Bit 20 must also be set.
25	Datalink In	This bit is used by offline tools and indicates that this is a Datalink In parameter. Bits 20 and 22 must also be set.
26	Not Writable While IO Active	This parameter cannot be written if the I/O data being exchanged between the Host and the peripheral is valid.
27	Command Parameter	This parameter commands the drive to take an action, such as 'Reset Defaults' or 'Autotune', and then returns to a value of zero. Offline software tools will not allow setting this parameter to anything other than a value of zero. If an offline file contains a Command Parameter with a non-zero value, the offline software tool will change the value to zero. Note that command parameters cannot have values that do not return to zero.

Bit	Name	Description
28	Current Value Is Default	This bit identifies a parameter that will not change if a 'Reset Defaults' is commanded. For example, if a drive contains a Language parameter that is set to German, setting defaults will leave the parameter set to German. Likewise, if the parameter is set to French, setting defaults will leave the parameter set to French.
29	Use Zero Text	If the 'Disallow Zero' bit is set, this bit must be cleared. If the 'Disallow Zero' bit is cleared, then: 0 = Use Disabled Text parameter class attribute. 1 = Use Zero Text parameter instance attribute.
30-31	Reserved	Reserved

Formulas for Converting

Display Value = ((Internal Value + Offset) x Multiplier x Base) / (Divisor x $10^{\text{Decimal Places}}$)

Internal Value = ((Display Value x Divisor x $10^{\text{Decimal Places}}$) / (Multiplier x Base)) - Offset

Common Services

Service Code	Implemented for:		Service Name
	Class	Instance	
0x0E	Yes	Yes	Get_Attribute_Single
0x10	Yes	Yes	Set_Attribute_Single

Object Specific Services

Service Code	Implemented for:		Service Name	Allocation Size (in bytes)	
	Class	Instance		Par. Number	Par. Value
0x4B	Yes	No	Get_Attributes_Scattered	2	2
0x4C	Yes	No	Set_Attributes_Scattered	2	2

The table below lists the parameters for the Get_Attributes_Scattered and Set_Attributes_Scattered object-specific service:

Name	Data Type	Description
Parameter Number	DWORD	Parameter to read or write
Parameter Value	DWORD	Parameter value to read or write (zero when reading)

DPI Fault Object

Class Code

Hexadecimal	Decimal
0x97	151

Products such as PowerFlex drives use this object for faults. Adapters use this object for events.

Services

Service Code	Implemented for:		Service Name
	Class	Instance	
0x0E	Yes	Yes	Get_Attribute_Single
0x10	Yes	Yes	Set_Attribute_Single

Instances

The number of instances depends on the maximum number of faults or events supported in the queue. The maximum number of faults/events can be read in Instance 0, Attribute 2.

Instances (Hex.)	(Dec.)	Device
0x0000…0x3FFF	0…16383	Host
0x4000…0x43FF	16384…17407	Adapter
0x4400…0x47FF	17408…18431	DPI Port 1
0x4800…0x4BFF	18432…19455	DPI Port 2
0x4C00…0x4FFF	19456…20479	DPI Port 3
0x5000…0x53FF	20480…21503	DPI Port 4
0x5400…0x57FF	21504…22527	DPI Port 5
0x5800…0x5BFF	22528…23551	DPI Port 6

Example	Description
0	Class Attributes (Drive)
1	Most Recent Drive Fault
2	Second Most Recent Drive Fault
⋮	⋮
16384	Class Attributes (Adapter)
16385	Most Recent Adapter Event
⋮	⋮

Class Attributes

Attribute ID	Access Rule	Name	Data Type	Description
1	Get	Class Revision	WORD	Revision of object
2	Get	Number of Instances	WORD	Maximum number of faults/events that the device can record in its queue
3	Set	Fault Command Write	BYTE	0 = No Operation 1 = Clear Fault/Event 2 = Clear Fault/Event Queue 3 = Reset Device
4	Get	Fault Trip Instance Read	WORD	Fault that tripped the device. For adapters, this value is always 1 when faulted.
5	Get	Fault Data List	STRUCT of: BYTE BYTE WORD[n]	Number of faults/events in the queue. A '0' indicates the fault queue is empty.
6	Get	Number of Recorded Faults	WORD	Number of faults/events in the queue. A '0' indicates the fault queue is empty.
7	Get	Fault Parameter Reference	WORD	Number of faults/events in the queue. A '0' indicates the fault queue is empty.

Instance Attributes

Attribute ID	Access Rule	Name	Data Type	Description
0	Get	Full/All Information	STRUCT of WORD STRUCT of: BYTE BYTE STRING[16] STRUCT of: LWORD BOOL[16] WORD CONTAINER[n]	Fault code Fault source DPI port DPI Device Object Fault text Fault time stamp Timer value (0 = timer not supported) BOOL[0]: (0 = invalid data, 1 = valid data) BOOL[1]: (0 = elapsed time, 1 = real time) BOOL[2…15]: Not used Reserved Reserved
1	Get	Basic Information	STRUCT of WORD STRUCT of: BYTE BYTE STRUCT of: LWORD BOOL[16]	Fault code Fault source DPI port DPI Device Object Fault time stamp Timer value (0 = timer not supported) BOOL[0]: (0 = invalid data, 1 = valid data) BOOL[1]: (0 = elapsed time, 1 = real time) BOOL[2…15]: Not used
2	Get	International Fault Text	STRINGN	Text describing the fault with support for Unicode.

DPI Alarm Object

Class Code

Hexadecimal	Decimal
0x98	152

Products such as PowerFlex drives use this object for alarms or warnings. Adapters do not support this object.

Services

Service Code	Implemented for:		Service Name
	Class	Instance	
0x0E	Yes	Yes	Get_Attribute_Single
0x10	Yes	Yes	Set_Attribute_Single

Instances

The number of instances depends on the maximum number of alarms supported by the queue. The maximum number of alarms can be read in Instance 0, Attribute 2.

Instances (Hex.)	(Dec.)	Device
0x0000…0x3FFF	0…16383	Host

Only host devices can have alarms.

Example	Description
0	Class Attributes (Drive)
1	Most Recent Alarm
2	Second Most Recent Alarm
⋮	⋮

Class Attributes

Attribute ID	Access Rule	Name	Data Type	Description
1	Get	Class Revision	WORD	Revision of object
2	Get	Number of Instances	WORD	Maximum number of alarms that the device can record in its queue
3	Set	Alarm Command Write	BYTE	0 = No Operation 1 = Clear Alarm 2 = Clear Alarm Queue 3 = Reset Device
4	Get	Fault Data List	STRUCT of: BYTE BYTE WORD[n]	Reserved
5	Get	Number of Recorded Alarms	WORD	Number of alarms in the queue. A '0' indicates the alarm queue is empty.

Instance Attributes

Attribute ID	Access Rule	Name	Data Type	Description
0	Get	Full/All Information	STRUCT of WORD STRUCT of: BYTE BYTE STRING[16] STRUCT of: LWORD BOOL[16] WORD CONTAINER[n]	Alarm code Alarm source DPI port DPI Device Object Alarm text Alarm time stamp Timer value (0 = timer not supported) BOOL[0]: (0 = invalid data, 1 = valid data) BOOL[1]: (0 = elapsed time, 1 = real time) BOOL[2…15] Reserved Reserved Reserved
1	Get	Basic Information	STRUCT of WORD STRUCT of: BYTE BYTE STRUCT of: LWORD BOOL[16]	Alarm code Alarm source DPI port DPI Device Object Alarm time stamp Timer value (0 = timer not supported) BOOL[0]: (0 = invalid data, 1 = valid data) BOOL[1]: (0 = elapsed time, 1 = real time) BOOL[2…15] Reserved
2	Get	International Alarm Text	STRINGN	Text describing the alarm with support for Unicode.

DPI Diagnostic Object

Class Code

Hexadecimal	Decimal
0x99	153

Services

Service Code	Implemented for:		Service Name
	Class	Instance	
0x0E	Yes	Yes	Get_Attribute_Single
0x10	Yes	Yes	Set_Attribute_Single

Instances

The number of instances depends on the maximum number of diagnostic items in the device. The total number of diagnostic items can be read in Instance 0, Attribute 2.

Instances (Hex.)	(Dec.)	Device
0x0000…0x3FFF	0…16383	Host
0x4000…0x43FF	16384…17407	Adapter
0x4400…0x47FF	17408…18431	DPI Port 1
0x4800…0x4BFF	18432…19455	DPI Port 2
0x4C00…0x4FFF	19456…20479	DPI Port 3
0x5000…0x53FF	20480…21503	DPI Port 4
0x5400…0x57FF	21504…22527	DPI Port 5
0x5800…0x5BFF	22528…23551	DPI Port 6

Example	Description
0	Class Attributes (Drive)
1	Drive Diagnostic Item 1
2	Drive Diagnostic Item 2
⋮	⋮
16384	Class Attributes (Adapter)
16385	Adapter Diagnostic Item1
⋮	⋮

Class Attributes

Attribute ID	Access Rule	Name	Data Type	Description
1	Get	Class Revision	WORD	1
2	Get	Number of Instances	WORD	Number of diagnostic items in the device.
3	Get	ENUM Offset	WORD	DPI ENUM object instance offset

Instance Attributes

Attribute ID	Access Rule	Name	Data Type	Description
0	Get	Full/All Information	STRUCT of:	
			BOOL[32]	Descriptor (see page 202)
			CONTAINER (1)	Value
			CONTAINER	Minimum value
			CONTAINER	Maximum value
			CONTAINER	Default value
			WORD	Pad Word
			WORD	Pad Word
			STRING[4]	Units (for example, Amp, Hz)
			WORD	Multiplier (2)
			WORD	Divisor (2)
			WORD	Base (2)
			INT	Offset (2)
			DWORD	Link (source of the value) (0 = no link)
			STRING[16]	Diagnostic name text

Attribute ID	Access Rule	Name	Data Type	Description
1	Get/Set	Value	Various	Diagnostic item value
2	Get	International Diagnostic Item Text	STRUCT of:	
			STRINGN	Diagnostic name text
			STRINGN	Diagnostic units text
3	Get	International Full Read All	STRUCT of:	
			BOOL[32]	Descriptor
			CONTAINER	Value
			CONTAINER	Minimum
			CONTAINER	Maximum
			CONTAINER	Default
			WORD	Pad Word
			WORD	Pad Word
			WORD	Multiplier
			WORD	Divisor
			WORD	Base
			INT	Offset
			DWORD	Pad
			BOOL[32]	Extended descriptor
			STRINGN	Diagnostic name text
			STRINGN	Diagnostic units text

(1) A CONTAINER is a 32-bit block of data that contains the data type used by a value. If signed, the value is sign extended. Padding is used in the CONTAINER to ensure that it is always 32-bits.

(2) This value is used in the formulas used to convert the value between display units and internal units. See Formulas for Converting on page 204.

DPI Time Object

Class Code

Hexadecimal	Decimal
0x9B	155

Services

Service Code	Implemented for:		Service Name
	Class	Instance	
0x0E	Yes	Yes	Get_Attribute_Single
0x10	Yes	Yes	Set_Attribute_Single

Instances

The number of instances depends on the number of timers in the device. Instance 1 is always reserved for a real-time clock although a device may not support it. The total number of timers can be read in Instance 0, Attribute 2.

Instances (Hex.)	(Dec.)	Device
0x0000…0x3FFF	0…16383	Host
0x4000…0x43FF	16384…17407	Adapter
0x4400…0x47FF	17408…18431	DPI Port 1
0x4800…0x4BFF	18432…19455	DPI Port 2
0x4C00…0x4FFF	19456…20479	DPI Port 3
0x5000…0x53FF	20480…21503	DPI Port 4
0x5400…0x57FF	21504…22527	DPI Port 5
0x5800…0x5BFF	22528…23551	DPI Port 6

Example	Description
0	Class Attributes (Drive)
1	Real Time Clock (Predefined) (not always supported)
2	Timer 1
3	Timer 2
⋮	⋮

Class Attributes

Attribute ID	Access Rule	Name	Data Type	Description
1	Get	Class Revision	WORD	Revision of object
2	Get	Number of Instances	WORD	Number of timers in the object, excluding the real-time clock that is predefined.
3	Get	First Device Specific Timer	WORD	Instance of the first timer that is not predefined.
4	Set	Time Command Write	BYTE	0 = No Operation 1 = Clear all timers (Does not clear the real-time clock or read only timers)
5	Get	Number of Supported Time Zones	WORD	Number of time zones described in the Time Zone List attribute.
6	Get	Time Zone List	STRUCT	Identifies a time zone.
7	Get/Set	Active Time Zone ID	WORD	The ID field of the Time Zone List structure for the desired time zone.
8	Get	Active Time Zone Data	STRUCT of: INT BYTE BYTE BYTE BYTE BYTE BYTE INT BYTE BYTE BYTE BYTE BYTE BYTE	 Standard bias Standard month Standard day of week Standard week Standard hour Standard minute Standard second Daylight offset Daylight month Daylight day of week Daylight week Daylight hour Daylight minute Daylight second
9	Get/Set	Custom Time Zone Data	STRUCT of: INT BYTE BYTE BYTE BYTE BYTE BYTE INT BYTE BYTE BYTE BYTE BYTE BYTE	 Standard bias Standard month Standard day of week Standard week Standard hour Standard minute Standard second Daylight offset Daylight month Daylight day of week Daylight week Daylight hour Daylight minute Daylight second

Instance Attributes

Attribute ID	Access Rule	Name	Data Type	Description
0	Get	Read Full	STRUCT of: STRING[16] LWORD or STRUCT BOOL[16]	 Name of the timer Elapsed time in milliseconds unless timer is a real-time clock (see attribute 2) See attribute 3
1	Get	Timer Text	STRING[16]	Name of the timer
2	Get/Set	Timer Value	LWORD -or- STRUCT of: WORD BYTE BYTE BYTE BYTE BYTE BYTE	Elapsed time in milliseconds unless the timer is a real-time clock. Real-Time Clock Data: Milliseconds (0…999) Seconds (0…59) Minutes (0…59) Hours (0…23) Days (1…31) Months (1 = January, 12 = December) Years (since 1972)
3	Get	Timer Descriptor	BOOL[16]	BOOL[0]: (0 = invalid data, 1 = valid data) BOOL[1]: (0 = elapsed time, 1 = real time) BOOL[2…15]: Not used
4	Get	International Read Full	STRUCT of: STRINGN STRUCT BOOL[16]	 International timer text Timer value Timer descriptor
5	Get	International Timer Text	STRINGN	Name of this timer
6	Get	Clock Status	BOOL[32]	Identifies clock status
8	Get/Set	Number of Leap Seconds	INT	Identifies the current number of Leap Seconds.
9	Get	Clock Options	BOOL[32]	Identifies the optional functionality available in the device's System Clock.
10	Get/Set	Clock Options Enable	BOOL[32]	Identifies which of the clock's options are enabled.

TCP/IP Interface Object

Class Code

Hexadecimal	Decimal
0xF5	245

Services

Service Code	Implemented for:		Service Name
	Class	Instance	
0x0E	Yes	Yes	Get_Attribute_Single
0x10	No	Yes	Set_Attribute_Single

Instances

Get_Attribute_All is supported for instances. The adapter supports one instance of the TCP/IP Interface object.

Number	Description
0	Class Attributes
1	Object Attributes

Class Attributes

Attribute ID	Access Rule	Name	Data Type	Description
1	Get	Revision	WORD	The revision of this object

Instance Attributes

Attribute ID	Access Rule	Name	Data Type	Description
1	Get	Status of TCP/IP Network Interface	DWORD	
2	Get	Configuration Capability	DWORD	0x000000F4
3	Get/Set	Configuration Control	DWORD	0 = Configuration from NVS 2 = Configuration from DHCP
4	Get	Physical Link Object	STRUCT of: UINT Padded EPATH	 2 words 20 F6 24 01 (Enet Link Object instance 1)
5	Get/Set	Interface Configuration	STRUCT of: UDINT UDINT UDINT UDINT UDINT STRING	 IP Address Network Mask Gateway Address Primary DNS Secondary DNS Default Domain Name for not fully qualified host names
6	Get/Set	Host Name	STRING	Host name when using DHCP
8	Get/Set	TTL Value	USINT	Time to Live value for EtherNet/IP multicast packets
9	Get/Set	Multicast Config	Struct of: USINT USINT UINT UDINT	 Allocation Control Reserved Number of multicast addresses to allocate (1-4) Multicast starting address.
10	Get/Set	SelectAcd	BOOL	Activates the use of ACD
11		LastConflictDetected	Struct of: USINT USINT[6] USINT[28]	 AcdActivity RemoteMAC ArpPdu

Ethernet Link Object

Class Code

Hexadecimal	Decimal
0xF6	246

Services

The following common services will be implemented for the Ethernet Link Object.

Service Code	Implemented for:		Service Name
	Class	Instance	
0x0E	Yes	Yes	Get_Attribute_Single
0x10	No	Yes	Set_Attribute_Single
0x4C	No	Yes	Get_and_Clear

Instances

The adapter supports one instance of the TCP/IP Interface object.

Number	Description
0	Class Attributes
1	Object Attributes Ethernet Port 1
2	Object Attributes Ethernet Port 2

Class Attributes

The following class attributes will be supported.

Attribute ID	Access Rule	Name	Data Type	Value
1	Get	Revision	UINT	3
2	Get	Max. Instance	UINT	2
3	Get	Number of Instances	UINT	2

Instance Attributes

Two instances of the Ethernet Link Object will be supported.

Attribute ID	Access Rule	Name	Data Type	Description
1	Get	Interface Speed	UDINT	10 or 100 megabits per second (Mbs)
2	Get	Interface Flags	DWORD	See EtherNet/IP specifications
3	Get	Physical Address	Array of 6 USINTs	MAC address
4	Get	Interface Counters	STRUCT of: UDINT UDINT UDINT UDINT UDINT UDINT UDINT UDINT UDINT UDINT UDINT	 In Octets In Ucast packets In NUcast packets In Discards In Errors In Unknown Protos Out Octets Out Ucast packets Out NUcast packets Out Discards Out Errors

Attribute ID	Access Rule	Name	Data Type	Description
5	Get	Media Counters	STRUCT of: DWORD DWORD DWORD DWORD DWORD DWORD DWORD DWORD DWORD DWORD DWORD DWORD	RX = Received, TX = Transmitted RX frames not having integral number of octets long RX frames not passing FCS check TX frames having one collision TX frames having multiple collisions Number of times of SQE test error message TX Frames delayed first attempt by busy medium Collisions detected later than 512 bit-times in trans. TX frames failing due to excessive collisions TX frames failing due to intern MAC sublayer TX error Times of carrier sense condition loss during trans. RX frames exceeding the maximum frame size RX frames failing due to intern MAC sublayer RX error
6	Get/Set	Interface Control	Struct of: WORD UINT	Struct of: Control Bits Forced Interface Speed
7	Get	Interface Type	USINT	2 = Twisted-pair (e.g., 10Base-T, 100Base-TX, 1000Base-T, etc.)
8	Get	Interface State	USINT	0 = Unknown interface state 1 = The interface is enabled and is ready to send and receive data 2 = The interface is disabled 3 = The interface is testing
9	Get/Set	Admin State	USINT	1 = Enable the interface (default) 2 = Disable the interface.
10	Get	Interface Label	SHORT_STRING	Instance 1: LS 1 Instance 2: LS 2

Logic Command/Status Words

This appendix presents the definitions of the Logic Command and Logic Status words that are used for some products that can be connected to the adapter. If the Logic Command/Logic Status for the product that you are using is not listed, refer to your product's documentation.

PowerFlex 70/70EC, PowerFlex 700/700VC, and PowerFlex 700H Drives

Logic Command Word

Logic Bits																	
15	14	13	12	11	10	9	8	7	6	5	4	3	2	1	0	Command	Description
															x	Stop (1)	0 = Not Stop 1 = Stop
														x		Start (1)(2)	0 = Not Start 1 = Start
													x			Jog	0 = Not Jog (Par. 100) 1 = Jog
												x				Clear Faults	0 = Not Clear Faults 1 = Clear Faults
										x	x					Direction	00 = No Command 01 = Forward Command 10 = Reverse Command 11 = Hold Direction Control
									x							Local Control	0 = No Local Control 1 = Local Control
								x								MOP Increment	0 = Not Increment 1 = Increment
						x	x									Accel Rate	00 = No Command 01 = Accel Rate 1 Command (Par. 140) 10 = Accel Rate 2 Command (Par. 141) 11 = Hold Accel Rate
				x	x											Decel Rate	00 = No Command 01 = Decel Rate 1 Command (Par. 142) 10 = Decel Rate 2 Command (Par. 143) 11 = Hold Decel Rate
	x	x	x													Reference Select (3)	000 = No Command 001 = Ref A Select (Par. 90) 010 = Ref B Select (Par. 93) 011 = Preset 3 (Par. 103) 100 = Preset 4 (Par. 104) 101 = Preset 5 (Par. 105) 110 = Preset 6 (Par. 106) 111 = Preset 7 (Par. 107)
x																MOP Decrement	0 = Not Decrement 1 = Decrement

(1) A '0 = Not Stop' condition (logic 0) must first be present before a '1 = Start' condition will start the drive. The Start command acts as a momentary Start command. A '1' will start the drive, but returning to '0' **will not** stop the drive.

(2) This Start will not function if a digital input (parameters 361…366) is programmed for 2-Wire Control (option 7, 8 or 9).

(3) This Reference Select will not function if a digital input (parameters 361…366) is programmed for 'Speed Sel 1, 2 or 3' (option 15, 16 or 17). Note that Reference Select is 'Exclusive Ownership' – see drive User Manual for more information.

Logic Status Word

Logic Bits																	
15	14	13	12	11	10	9	8	7	6	5	4	3	2	1	0	Status	Description
															x	Ready	0 = Not Ready (Par. 214) 1 = Ready
														x		Active	0 = Not Active (Running) 1 = Active
													x			Command Direction	0 = Reverse 1 = Forward
												x				Actual Direction	0 = Reverse 1 = Forward
											x					Accel	0 = Not Accelerating 1 = Accelerating
										x						Decel	0 = Not Decelerating 1 = Decelerating
									x							Alarm	0 = No Alarm (Par. 211 & 212) 1 = Alarm
								x								Fault	0 = No Fault (Par. 243) 1 = Fault
							x									At Speed	0 = Not At Reference 1 = At Reference
				x	x	x										Local Control (1)	000 = Port 0 (TB) 001 = Port 1 010 = Port 2 011 = Port 3 100 = Port 4 101 = Port 5 110 = Port 6 111 = No Local
x	x	x	x													Reference	0000 = Ref A Auto (Par. 90) 0001 = Ref B Auto (Par. 93) 0010 = Preset 2 Auto 0011 = Preset 3 Auto 0100 = Preset 4 Auto 0101 = Preset 5 Auto 0110 = Preset 6 Auto 0111 = Preset 7 Auto 1000 = Term Blk Manual 1001 = DPI 1 Manual 1010 = DPI 2 Manual 1011 = DPI 3 Manual 1100 = DPI 4 Manual 1101 = DPI 5 Manual 1110 = DPI 6 Manual 1111 = Jog Ref

(1) See 'Owners' in drive User Manual for further information.

PowerFlex 700S Drives

Logic Command Word (Phase II Control)

Logic Bits																Command	Description
15	14	13	12	11	10	9	8	7	6	5	4	3	2	1	0		
															x	Normal Stop	0 = Not Normal Stop 1 = Normal Stop
														x		Start (1)	0 = Not Start 1 = Start
													x			Jog 1	0 = Not Jog using [Jog Speed 1] (Par. 29) 1 = Jog using [Jog Speed 1] (Par. 29)
												x				Clear Fault (2)	0 = Not Clear Fault 1 = Clear Fault
										x	x					Unipolar Direction	00 = No Command 01 = Forward Command 10 = Reverse Command 11 = Hold Direction Control
									x							Reserved	
								x								Jog 2	0 = Not Jog using [Jog Speed 2] (Par. 39) 1 = Jog using [Jog Speed 2] (Par. 39)
							x									Current Limit Stop	0 = Not Current Limit Stop 1 = Current Limit Stop
						x										Coast Stop	0 = Not Coast to Stop 1 = Coast to Stop
					x											Reserved	
				x												Reserved	
			x													Spd Ref Sel0	
		x														Spd Ref Sel1	
	x															Spd Ref Sel2	
x																Reserved	

Bits			
14	13	12	
0	0	0	= Spd Ref A (Par. 27)
0	0	1	= Spd Ref B (Par. 28)
0	1	0	= Preset 2 (Par. 15)
0	1	1	= Preset 3 (Par. 16)
1	0	0	= Preset 4 (Par. 17)
1	0	1	= Preset 5 (Par. 18)
1	1	0	= Preset 6 (Par. 19)
1	1	1	= Preset 7 (Par. 20)

(1) A Not Stop condition (logic bit 0 = 0, logic bit 8 = 0, and logic bit 9 = 0) must first be present before a 1 = Start condition will start the drive.

(2) To perform this command, the value must switch from '0' to '1'.

Logic Status Word (Phase II Control)

Logic Bits																	
15	14	13	12	11	10	9	8	7	6	5	4	3	2	1	0	**Status**	**Description**
															x	Active	0 = Not Active 1 = Active
														x		Running	0 = Not Running 1 = Running
													x			Command Direction	0 = Reverse 1 = Forward
												x				Actual Direction	0 = Reverse 1 = Forward
											x					Accel	0 = Not Accelerating 1 = Accelerating
										x						Decel	0 = Not Decelerating 1 = Decelerating
									x							Jogging	0 = Not Jogging 1 = Jogging
								x								Fault	0 = No Fault (Par. 323, 324, 325) 1 = Fault
							x									Alarm	0 = No Alarm (Par. 326, 327, 328) 1 = Alarm
						x										Flash Mode	0 = Not in Flash Mode 1 = In Flash Mode
					x											Run Ready	0 = Not Ready to Run (Par. 156) 1 = Ready to Run
				x												At Limit (1)	0 = Not At Limit (Par. 304) 1 = At Limit
			x													Tach Loss Sw	0 = Not Tach Loss Sw 1 = Tach Loss Sw
		x														At Zero Spd	0 = Not At Zero Speed 1 = At Zero Speed
	x															At Setpt Spd	0 = Not At Setpoint Speed 1= At Setpoint Speed
x																Enable	0 = Not Enabled 1 = Enabled

(1) See Parameter 304 - [Limit Status] in the PowerFlex 700S drive User Manual for a description of the limit status conditions.

SMC Flex Controllers SMC-50 Controllers

Logic Status Word

Bit #																Status	Description
15	14	13	12	11	10	9	8	7	6	5	4	3	2	1	0		
															X	Enabled	1 — Control Power Applied 0 — No Control Power
														X		Running	1 — Power Applied to Motor 0 — Power **not** Applied to Motor
													X			Phasing	1 — ABC Phasing 0 — CBA Phasing
												X				Phasing Active	1 — 3-phase is valid 0 — No valid 3-phase detected
											X					Starting (Accel)	1 — Performing a Start Maneuver 0 — Not Performing a Start Maneuver
										X						Stopping (Decel)	1 — Performing a Stop Maneuver 0 — Not Performing a Stop Maneuver
									X							Alarm	1 — Alarm Present 0 — No Alarm Present
								X								Fault	1 — Fault Condition Exists 0 — No Fault Condition
							X									At Speed	1 — Full Voltage Applied 0 — Not Full Voltage Applied
						X										Start/ Isolation	1 — Start/Isolation Contactor Enabled 0 — Start/Isolation Contactor Disabled
					X											Bypass	1 — External Bypass Contactor Enabled 0 — External Bypass Contactor Disabled
				X												Ready	1 — Ready 0 — Not Ready
			X													Option 1 Input	1 — Input Active 0 — Input Inactive
		X														Option 2 Input	1 — Input Active 0 — Input Inactive
—																—	Bits 14 and 15 — Not Used

Logic Command Word (Control)

Bit #																Status	Description
15	14	13	12	11	10	9	8	7	6	5	4	3	2	1	0		
															X	Stop	1 — Stop/Inhibit 0 — No Action
														X		Start	1 — Start 0 — No Action
													X			Option #1 Input	1 — Stop Maneuver/Inhibit 0 — No Action
												X				Clear Faults	1 — Clear Faults 0 — No Action
											X					Option #2 Input	1 — Perform Option 2 function 0 — No Action
—																—	Bits 5…10 — Not Used
				X												Aux Enable	1 — Use Aux 1…Aux 4 0 — Ignore Aux 1…Aux 4
			X													Aux 1	1 — Aux 1 Active 0 — Aux 1 Inactive
		X														Aux 2	1 — Aux 2 Active 0 — Aux 2 Inactive
	X															Aux 3	1 — Aux 3 Active 0 — Aux 3 Inactive
X																Aux 4	1 — Aux 4 Active 0 — Aux 4 Inactive

A

Adapter

Devices such as drives, controllers, and computers usually require a network communication adapter to provide a communication interface between them and a network such as EtherNet/IP. An adapter reads data on the network and transmits it to the connected device. It also reads data in the device and transmits it to the network.

The 20-COMM-ER EtherNet/IP adapter connects PowerFlex 7-Class drives and SMC controllers to an EtherNet/IP network. Adapters are sometimes also called ‘cards’, ‘embedded communication options’, ‘gateways’, ‘modules’, or ‘peripherals’.

B

BOOTP (Bootstrap Protocol)

BOOTP lets the adapter configure itself dynamically at restart if the network has a BOOTP server. The BOOTP server assigns the adapter a preconfigured IP address, a subnet mask, and a gateway address; therefore, you do not have to configure these with the parameters in the adapter. BOOTP can make it easier to administer an Ethernet network. A **free version** of the Rockwell Software® BOOTP Server can be obtained at http://www.software.rockwell.com/support/download/detail.cfm?ID=3390.

Bridge

A network device that can route messages from one network to another. A bridge also refers to a communications module in a ControlLogix controller that connects the controller to a network. See also Scanner.

C

CIP (Common Industrial Protocol)

CIP is the transport and application layer protocol used for messaging over EtherNet/IP, ControlNet, and DeviceNet networks. The protocol is used for implicit messaging (real-time I/O) and explicit messaging (configuration, data collection, and diagnostics).

Connected Components Workbench Software

The recommended tool for monitoring and configuring Allen-Bradley products and network communication adapters. It can be used on computers running various Microsoft Windows operating systems. You can obtain a **free copy** of Connect Components Workbench software at http://www.ab.com/support/abdrives/webupdate/software.html.

ControlFLASH

A **free** software tool used to electronically update firmware of Allen-Bradley products and network communication adapters. ControlFLASH software is downloaded automatically when the firmware revision file for the product being

updated is downloaded from the Allen-Bradley updates website to your computer.

Controller

A controller, also called programmable logic controller, is a solid-state control system that has a user-programmable memory for storage of instructions to implement specific functions such as I/O control, logic, timing, counting, report generation, communication, arithmetic, and data file manipulation. A controller consists of a central processor, input/output interface, and memory. See also Scanner.

D

Data Rate

The speed at which data is transferred on the EtherNet/IP network. You can set the adapter to a data rate of 10 Mbps Full-Duplex, 10 Mbps Half-Duplex, 100 Mbps Full-Duplex, or 100 Mbps Half-Duplex. If another device on the network sets or auto-negotiates the data rate, you can set the adapter to automatically detect the data rate.

Datalinks

A Datalink is a type of pointer used by PowerFlex 7-Class drives and SMC controllers to transfer data to and from the controller. Datalinks allow specified parameters to be read or written to without using explicit messages. When enabled, each Datalink consumes either four bytes or eight bytes in both the input and output image table of the controller. The drive determines the size of Datalinks.

Device Level Ring (DLR)

A protocol that allows multiported EtherNet device to be connected in a ring topology, enabling broken ring connection detection and network reconfirmation to linear topology.

DLR Announce Frame

Data frame sent by the ring supervisor in a ring network to announce transition from linear to ring or ring to linear configuration.

DLR Beacon Frame

Data frame sent by the ring supervisor in a ring network used to lost connections that break the ring.

DLR Ring Supervisor

A node that sends beacon and announce frames on a ring network to monitor and maintain connectivity by re-configuring the ring while nodes are disconnected or reconnected.

DPI (Drive Peripheral Interface)

A second generation peripheral communication interface used by various Allen-Bradley drives and power products, such as PowerFlex 7-Class drives and SMC controllers. It is a functional enhancement to SCANport.

DPI Peripheral

A device that provides an interface between DPI and a network or user. Peripheral devices are also referred to as 'adapters' or 'modules'. The 20-COMM-ER adapter, 1203-USB or 1203-SSS converter, and PowerFlex 7-Class HIMs (20-HIM-xxx) are examples of DPI peripherals.

DPI Product

A device that uses the DPI communications interface to communicate with one or more peripheral devices. For example, a motor drive such as a PowerFlex 7-Class drive is a DPI product. In this manual, a DPI product is also referred to as 'drive' or 'host'.

DriveExplorer Software

A tool for monitoring and configuring Allen-Bradley products and network communication adapters. It can be used on computers running various Microsoft Windows operating systems. DriveExplorer software, version 3.xx or later, can be used to configure this adapter and PowerFlex drives. This software tool has been discontinued and is now available as **freeware** at http://www.ab.com/support/abdrives/webupdate/software.html. There are no plans to provide future updates to this tool and the download is being provided 'as-is' for users that lost their DriveExplorer CD, or need to configure legacy products not supported by Connected Components Workbench software.

DriveTools SP Software

A software suite designed for running on various Microsoft Windows operating systems. This software suite provides a family of tools, including DriveExecutive software (version 3.01 or later), that you can use to program, monitor, control, troubleshoot, and maintain Allen-Bradley products. DriveTools SP software can be used with PowerFlex 7-Class and PowerFlex 4-Class drives, and legacy drives that implement the SCANport communication interface. Information about DriveTools SP software can be accessed at http://www.ab.com/drives/drivetools.

Duplex

Duplex describes the mode of communication. 'Full-duplex' communication lets a device exchange data in both directions at the same time. 'Half-duplex' communication lets a device exchange data only in one direction at a time. The duplex used by the adapter depends on the type of duplex that other network devices, such as switches, support.

E

EDS (Electronic Data Sheet) Files

Simple text files that are used by network configuration tools to describe products so that you can easily commission them on a network. EDS files describe a product device type and revision. EDS files for many Allen-Bradley products can be found at http://www.ab.com/networks/eds.

EtherNet/IP Network

EtherNet/IP (Industrial Protocol) is an open producer-consumer communication network based on the Ethernet standard (IEEE 802.3), TCP/IP, UDP/IP, and CIP. Designed for industrial communication, both I/O and explicit messages can be transmitted over the network. Each device is assigned a unique IP address and transmits data on the network. The number of devices that an EtherNet/IP network can support depends on the class of IP address. For example, a network with a Class C IP address can have 254 nodes.

General information about EtherNet/IP and the EtherNet/IP specification are maintained by the Open DeviceNet Vendor's Association (ODVA). ODVA is online at http://www.odva.org.

Explicit Messaging

Explicit Messages are used to transfer data that does not require continuous updates. They are typically used to configure, monitor, and diagnose devices over the network.

F

Fault Action

A fault action determines how the adapter and connected drive act when a communication fault (for example, a disconnected cable) occurs or when the controller is switched out of run mode. The former uses a communication fault action, and the latter uses an idle fault action.

Fault Configuration

When communication is disrupted (for example, a cable is disconnected), the adapter and PowerFlex drive can respond with a user-defined fault configuration. The user sets the data that is sent to the drive using specific fault configuration parameters in the adapter. When a fault action parameter is set to use the fault

configuration data and a fault occurs, the data from these parameters is sent as the Logic Command, Reference, and/or Datalinks.

G

Gateway

A device on a network that connects an individual network to a system of networks. When a node needs to communicate with a node on another network, a gateway transfers the data between the two networks. You need to configure the address for the gateway device in the adapter if you want the adapter to communicate with devices that are not on its network.

H

Hardware Address

Each Ethernet device has a unique hardware address (sometimes called a MAC address) that is 48 bits. The address appears as six digits separated by colons (for example, xx:xx:xx:xx:xx:xx). Each digit has a value between 0 and 255 (0x00 and 0xFF). This address is assigned in the hardware and cannot be changed. It is required to identify the device if you are using a BOOTP server.

HIM (Human Interface Module)

A device that can be used to configure and control a drive. PowerFlex 7-Class HIMs (catalog number 20-HIM-xx) can be used to configure PowerFlex 7-Class drives and their connected peripherals.

Hold Last

When communication is disrupted (for example, a cable is disconnected), the adapter and PowerFlex drive can respond by holding last. Hold last results in the drive receiving the last data received via the network connection before the disruption. If the drive was running and using the Reference from the adapter, it will continue to run at the same Reference.

I

Idle Action

An idle action determines how the adapter and connected drive act when the controller is switched out of run mode.

I/O Data

I/O data, sometimes called ‘implicit messages’ or ‘input/output’, is time-critical data such as a Logic Command and Reference. The terms ‘input’ and ‘output’ are defined from the controller’s point of view. Output is produced by the controller and consumed by the adapter. Input is produced by the adapter and consumed by the controller.

IP Addresses

A unique IP address identifies each node on an EtherNet/IP network. An IP address consists of 32 bits that are divided into four segments of one byte each. It appears as four decimal integers separated by periods (xxx.xxx.xxx.xxx). Each 'xxx' can have a decimal value from 0 to 255. For example, an IP address could be 192.168.0.1.

An IP address has two parts: a network ID and a host ID. The class of network determines the format of the address.

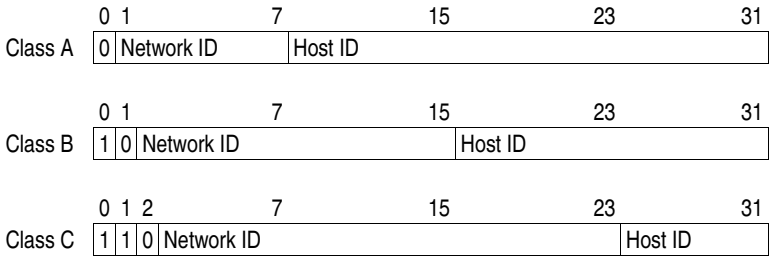

The number of devices on your EtherNet/IP network will vary depending on the number of bytes that are used for the network address. In many cases you are given a network with a Class C address, in which the first three bytes contain the network address (subnet mask = 255.255.255.0). This leaves 8 bits or 256 addresses on your network. Because two addresses are reserved for special uses (0 is an address for the network usually used by the router, and 255 is an address for broadcast messages to all network devices), you have 254 addresses to use on a Class C address block.

To ensure that each device on the Internet has a unique address, contact your network administrator or Internet Service Provider for unique fixed IP addresses. You can then set the unique IP address for the adapter by using a BOOTP server or by manually configuring parameters in the adapter. The adapter reads the values of these parameters only at powerup.

L

Logic Command/Logic Status

The Logic Command is used to control the PowerFlex 7-Class drive (for example, start, stop, and direction). It consists of one 16-bit word of output to the adapter from the network. The definitions of the bits in this word depend on the drive, and are shown in Appendix D.

The Logic Status is used to monitor the PowerFlex 7-Class drive (for example, operating state and motor direction). It consists of one 16-bit word of input from the adapter to the network. The definitions of the bits in this word depend on the drive, and are shown in Appendix D.

M

Master-Slave Hierarchy

An adapter configured for a master-slave hierarchy exchanges data with the master device. Usually, a network has one scanner which is the master device, and all other devices (for example, drives connected to EtherNet/IP adapters) are slave devices.

On a network with multiple scanners (called a multimaster hierarchy), each slave device must have a scanner specified as a master.

N

NVS (Nonvolatile Storage)

NVS is the permanent memory of a device. Devices such as the adapter and drive store parameters and other information in NVS so that they are not lost when the device loses power. NVS is sometimes called 'EEPROM'.

P

PCCC (Programmable Controller Communications Command)

PCCC is the protocol used by some controllers to communicate with devices on a network. Some software products (for example, DriveExplorer and DriveExecutive software) also use PCCC to communicate.

Peer-to-Peer Hierarchy

An adapter that is configured for a peer-to-peer hierarchy can exchange data with a device on the network that is not a scanner. This type of hierarchy can be set up so that a scanner configures or transmits data to one PowerFlex 7-Class drive which then sends the same configuration or data to other PowerFlex 7-Class drives on the network. To use a peer-to-peer hierarchy, you configure one adapter to transmit data (2 or 4 words) and one or more adapters to receive the data.

Ping

A message that is sent by a DPI product to its peripheral devices. They use the ping to gather data about the product, including whether it can receive messages and whether they can log in for control. On EtherNet/IP, a ping can be used to determine if a node exists.

PowerFlex 7-Class (Architecture Class) Drives

The Allen-Bradley PowerFlex 7-Class family of drives supports DPI and, at the time of publication, includes the PowerFlex 70, PowerFlex 700, PowerFlex 700H, PowerFlex 700S, PowerFlex 700L, and PowerFlex 7000 drives.

R

Reference/Feedback

The Reference is used to send a setpoint (for example, speed, frequency, and torque) to the drive. It consists of one word of output to the adapter from the

network. The size of the word (either a 16-bit word or 32-bit word) is determined by the drive.

Feedback is used to monitor the speed of the drive. It consists of one word of input from the adapter to the network. The size of the word (either a 16-bit word or 32-bit word) is determined by the drive.

RSLogix 5/500/5000 Software

RSLogix software is a tool for configuring and monitoring controllers to communicate with connected devices. It is a 32-bit application that runs on various Windows operating systems. Information about RSLogix software can be found at http://www.software.rockwell.com/rslogix.

S

Scanner

A scanner is a separate module (of a multi-module controller) or a built-in component (of a single-module controller) that provides communication with adapters connected to a network. See also Controller.

Status Indicators

LEDs that are used to report the status of the adapter, network, and drive. They are on the adapter and can be viewed on the front cover of the drive when the drive is powered.

Subnet Mask

An extension to the IP addressing scheme that lets you use a single network ID for multiple physical networks. A bit mask identifies the part of the address that specifies the network and the part of the address that specifies the unique node on the network. A ‘1’ in the subnet mask indicates the bit is used to specify the network. A ‘0’ in the subnet mask indicates that the bit is used to specify the node.

For example, a subnet mask on a network may appear as follows: 11111111 11111111 11111111 11000000 (255.255.255.192). This mask indicates that 26 bits are used to identify the network and 6 bits are used to identify devices on each network. Instead of a single physical Class C network with 254 devices, this subnet mask divides it into four networks with up to 62 devices each.

Switches

Network devices that provide virtual connections that help to control collisions and reduce traffic on the network. They are able to reduce network congestion by transmitting packets to an individual port only if they are destined for the connected device. In a control application, in which real time data access is critical, network switches may be required in place of hubs.

T

TCP (Transmission Control Protocol)

EtherNet/IP uses this protocol to transfer Explicit Messaging packets using IP. TCP guarantees delivery of data through the use of retries.

U

UDP (User Datagram Protocol)

EtherNet/IP uses this protocol to transfer I/O packets using IP. UDP provides a simple, but fast capability to send I/O messaging packets between devices. This protocol verifies that adapters transmit the most recent data because it does not use acknowledgements or retries.

UDDT (User-Defined Data Type)

A structure data type that you define during the development of an application (for example, to convert 32-bit REAL parameter data for written and read values to correctly display them in human readable format).

Update

The process of updating firmware in a device. The adapter and its connected PowerFlex 7-Class host drive and its peripherals can be updated using various Allen-Bradley software tools. See Updating the Adapter Firmware on page 44 for more information.

Z

Zero Data

When communication is disrupted (for example, a cable is disconnected), the adapter and drive can respond with zero data. Zero data results in the drive receiving zero as values for Logic Command, Reference, and Datalink data. If the drive was running and using the Reference from the adapter, it will stay running but at zero Reference.

A

adapter
- applying power **24**
- commissioning **26**
- compatible products **13**
- components **11**
- configuration tools **27**
- connecting to the drive **20**
- connecting to the network **23**
- definition **221**
- features **12**
- firmware updating **44**
- grounding **22**
- hardware address label **29**
- installation **17–26**
- IP address **29**, **32**
- mounting on the drive **22**
- parameters **171–179**
- resetting **43**
- specifications **169**
- using in a DPI External Comms Kit **167**
- viewing its status **44**
- web pages **153–??**

applying power to the adapter **24**
Assembly object **183**
attentions **15**

B

baud rate, *see data rate*
bit definitions of Logic Command/Status word for
- PowerFlex 70/700/700H drives **215**
- PowerFlex 700S drives **217**

BOOTP (Bootstrap Protocol)
- definition **221**
- disabling **32**
- free server application **221**
- using **29**

BOOTP parameter **171**
bridge **221**

C

cable, Ethernet **23**
cables
- DPI Internal Interface **20**, **21**

CIP (Common Industrial Protocol) **221**
classes of IP addresses **226**
Comm Flt Action parameter **174**
commissioning the adapter **26**
communications module, *see adapter*
compatible products **13**
components of the adapter **11**
configuration tools **27**
Connected Components Workbench software
- adapter configuration tool **14**, **27**
- definition/website **221**

connecting adapter to the
- drive **20**
- network **23**

ControlFLASH **221**
controller **222**
ControlLogix controller
- configuring the I/O **48**
- explicit messaging **108**
- using the I/O **88**

D

data rate
- definition **222**
- setting **34**

Datalink Size parameter **173**
Datalinks
- definition **222**
- in I/O image **80**
- using **86**

device-level ring (DLR)
- network example **23**

diagnostic items **146**
dimensions **170**
DPI
- connector on adapter **11**
- data rates **169**
- definition **223**
- Internal Interface cable **20**, **21**
- peripheral **223**
- products **13**, **223**

DPI Alarm object **206**
DPI Data Rate parameter **171**
DPI Device object **196**
DPI Diagnostic object **207**
DPI External Comms Kit - using adapter in **167**
DPI Fault object **204**

DPI I/O Act parameter **175**
DPI I/O Cfg parameter **174**
DPI Parameter object **198**
DPI Port parameter **171**
DPI Time object **209**
DriveExecutive software
  adapter configuration tool **14**, **27**
  definition/website **223**
DriveExplorer software
  adapter configuration tool **14**, **27**
  definition/website **223**
  free lite version **223**
drives, *see PowerFlex drives*
DriveTools SP software **223**
duplex communication mode
  definition **224**
  selecting **34**

E

EDS (Electronic Data Sheet) files **224**
EEPROM, *see Nonvolatile Storage (NVS)*
EMC Conformance **17**
EN Rate Act parameter **173**
EN Rate Cfg parameter **172**, **173**
environmental specifications **170**
equipment required **13**
Ethernet
  cable **23**
  connector on adapter **11**
Ethernet Link object **189**, **190**, **213**
EtherNet/IP
  data rates **169**
  example network for
    ControlLogix controller **48**
    MicroLogix 1100 controller **68**
  network definition **224**
  objects - list of **181**–??
  specification **224**
events
  clearing/viewing **149**
  list of **150**
explicit messaging
  about **106**
  configuring for
    ControlLogix controller **108**
    MicroLogix 1100/1400 controller **124**
  definition **224**
  performing **106**

F

fault action
  configuring the adapter for **41**
  definition **224**
fault configuration
  configuring the adapter for **42**
  definition **224**
faults, *see events*
features **12**
firmware revision **7**
firmware update
  definition **229**
  guidelines **44**
Flt Cfg A1-D2 In parameters **176**
Flt Cfg Logic parameter **175**
Flt Cfg Ref parameter **175**
full duplex, *see duplex*

G

gateway **225**
gateway address
  setting with BOOTP **29**
  setting with parameters **32**
Gateway Cfg 1-4 parameters **172**
grounding the adapter **22**

H

half duplex, *see duplex*
hardware address
  definition **225**
  in diagnostic item **148**
  on label **29**
HIM (Human Interface Module)
  accessing parameters with **28**
  definition **225**
  LCD model **28**
  LED model **28**

hold last
configuring the adapter for **41**
definition **225**
host IDs **226**

I

I/O
about **79**
configuring for
ControlLogix controller **48**
MicroLogix 1100/1400 controller **68**
configuring the adapter for **35**
definition **225**
understanding the I/O image **80**
using with
ControlLogix controller **88**
MicroLogix 1100/1400 controller **96**
PLC-5 controller **96**
SLC 500 controller **96**
Identity object **182**
idle action **225**
Idle Flt Action parameter **174**
installation
applying power to the adapter **24**
commissioning the adapter **26**
connecting to the drive **20**
connecting to the network **23**
preparing for **18**
Internal Interface cables
connecting to the adapter **21**
connecting to the drive **21**
illustration **21**
IP Addr Cfg 1-4 parameters **172**
IP address
definition/classes **226**
setting with BOOTP **29**
setting with parameters **32**

L

LCD HIM **28**
LED HIM **28**
LEDs, *see status indicators*
Link status indicator
troubleshooting with **145**
Logic Command/Status
bit definitions for
PowerFlex 70/700/700H drives **215**
PowerFlex 700S drives **217**
definition **226**
in I/O image for
ControlLogix controller **80**
PLC-5, SLC 500 or MicroLogix 1100 controllers **82**
using **84**

M

MAC address, *see hardware address*
manual
conventions **7**
related documentation **8**
website **8**
Master-Slave hierarchy
configuring adapter for **36**
definition **227**
mechanical dimensions **170**
messages, *see explicit messaging or I/O*
MicroLogix 1100/1400 controller
configuring the I/O **68**
explicit messaging **124**
limitations when using the I/O **68**
using the I/O **96**
mounting the adapter **22**
M-S Input parameter **176**
M-S Input parameter configurations **36**
M-S Output parameter **176**
M-S Output parameter configurations **36**

N

NET A status indicator
troubleshooting with **145**
NET B status indicator
locating **144**
network cable **23**
network IDs **226**
Network status indicator
troubleshooting with **145**
Non-Volatile Storage (NVS)
in adapter **27**
in drive **86**

Nonvolatile Storage (NVS)
definition **227**

O

objects - list of **181**–??
ODVA EtherNet/IP specification **224**

P

Parameter Group object **188**
Parameter object **185**
parameters
accessing **27**
convention **7**
list of **171**–**179**
numbering scheme **171**
restoring to factory-default settings **43**
PCCC (Programmable Controller Communications Command) **227**
PCCC object **190**
Peer A Input parameter **177**
Peer A Output parameter **179**
Peer B Input parameter **177**
Peer B Output parameter **179**
Peer Cmd Mask parameter **177**
Peer Flt Action parameter **177**
Peer Inp Addr 1-4 parameters **178**
Peer Inp Enable parameter **178**
Peer Inp Status parameter **178**
Peer Inp Timeout parameter **178**
Peer Out Enable parameter **179**
Peer Out Skip parameter **179**
Peer Out Time parameter **179**
Peer-to-Peer hierarchy
configuring adapter
to receive data **38**
to transmit data **37**
definition **227**
ping **227**
PLC-5 controller
limitations when using the I/O **68**
using the I/O **96**
PORT status indicator
locating **144**
troubleshooting with **144**
power consumption **169**
PowerFlex drives
compatible with adapter **13**
definition **227**
HIM **28**
installing adapter on **20**
preparing for an installation **18**
processor, *see controller*
programmable logic controller, *see controller*

Q

quick start **16**

R

Ref Adjust parameter **176**
Ref/Fdbk Size parameter **173**
Reference/Feedback
definition **227**
in I/O image for
ControlLogix controller **80**
PLC-5, SLC 500 or MicroLogix 1100 controllers **82**
setting an adjustment **41**
using **84**
Register object **184**
regulatory compliance **170**
related documentation **8**
requested packet interval **55**, **65**
Reset Module parameter **173**
ribbon cable, *see Internal Interface cable*
RSLinx Classic software
documentation **9**
using **47**
RSLogix 5/500/5000 software **228**

S

safety precautions **15**
scanner **228**
SLC 500 controller
limitations when using the I/O **68**
using the I/O **96**
specifications
adapter **169**
EtherNet/IP address **224**
EtherNet/IP subnet mask **228**

status indicators
definition **228**
Link **145**
NET A **145**
NET B **144**
Network **145**
normal operation **24**
PORT **144**
troubleshooting with **144**–??, **145**–??, **145**–??
understanding **143**
Subnet Cfg 1-4 parameters **172**
subnet mask
definition **228**
setting with BOOTP **29**
setting with parameters **32**
switches **228**

T

TCP (Transmission Control Protocol) **229**
TCP/IP Interface object **211**
technical support **8**
tools required **13**
troubleshooting **143**–**151**

U

UDDT (User-Defined Data Type) **229**
UDP (User Datagram Protocol) **229**

W

Web Enable parameter **179**
Web Features parameter **179**
web pages
enabling with parameter **42**
for the adapter **153**–??
website
BOOTP utility **221**
DriveExecutive software **223**
DriveExplorer software **223**
DriveTools SP software **223**
EDS files **224**
EtherNet/IP **224**
manuals **8**
ODVA (Open DeviceNet Vendor's Association) **224**
RSLogix 5/500/5000 software **228**
wiring, *see cable, Ethernet*

Z

zero data
configuring the adapter for **41**
definition **229**

U.S. Allen-Bradley Drives Technical Support - Tel: (1) 262.512.8176, Fax: (1) 262.512.2222, Email: support@drives.ra.rockwell.com, Online: www.ab.com/support/abdrives

www.rockwellautomation.com

Power, Control and Information Solutions Headquarters

Americas: Rockwell Automation, 1201 South Second Street, Milwaukee, WI 53204-2496 USA, Tel: (1) 414.382.2000, Fax: (1) 414.382.4444
Europe/Middle East/Africa: Rockwell Automation, Pegasus Park, De Kleetlaan 12a, 1831 Diegem, Belgium, Tel: (32) 2 663 0600, Fax: (32) 2 663 0640
Asia Pacific: Rockwell Automation, Level 14, Core F, Cyberport 3, 100 Cyberport Road, Hong Kong, Tel: (852) 2887 4788, Fax: (852) 2508 1846

Publication 20COMM-UM015B-EN-P - July 2013
Supercedes publication 20COMM-UM015A-EN-P — June 2013

Copyright © 2013 Rockwell Automation, Inc. All rights reserved. Printed in USA.

Series
A1F

Low Cost OEM Pressure Switch

Field Installable Weatherproof Enclosure

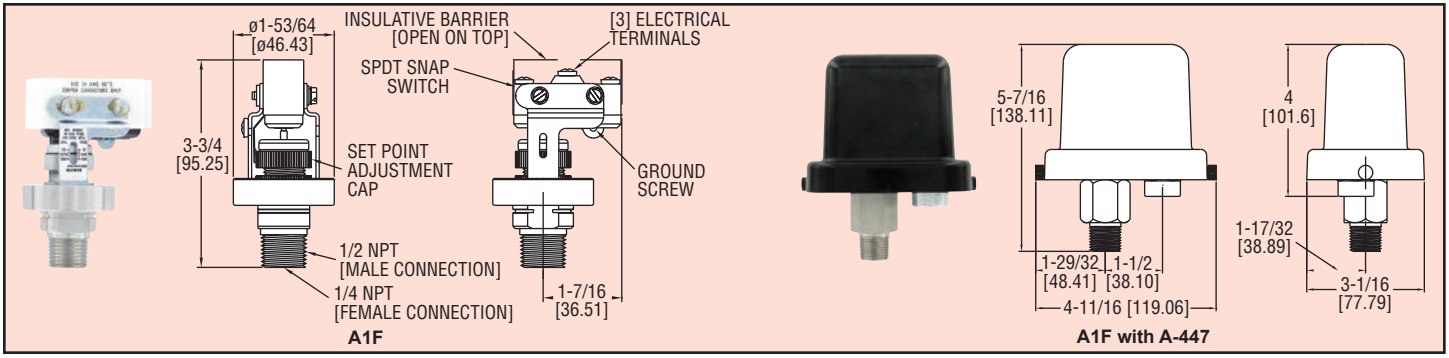

Low cost and precision made, the A1F Pressure Switch is ideal for OEM industrial applications. Wetted materials of 316 SS and fluorocarbon ensure great chemical compatibility with a wide range of process media. The open case style is perfect for panel mounting applications like pump skids. Field-installable weatherproof enclosure is available in polycarbonate offering a low cost weatherproof switch. Superior 15 A contact allows direct control of motors or pumps without the use of external relays, a true cost savings. Features include a convenient indicating scale for quick and easy field adjustment.

Model	Range	Deadband at Min Range	Deadband at Max Range
A1F-O-SS-1-1	2 to 15 (0.14 to 1.03)	2 (0.14)	3 (0.21)
A1F-O-SS-1-2	4 to 75 (0.28 to 5.17)	4 (0.27)	15 (1.0)
A1F-O-SS-1-3	8 to 225 (0.55 to 15.5)	8 (0.55)	25 (1.7)
A1F-O-SS-1-4	16 to 450 (1.1 to 31.0)	15 (1.0)	50 (3.5)

psig (bar)

ACCESSORY

A-447, Weatherproof enclosure; Easy field installation; Meets NEMA 4X, polycarbonate cover with 1/2″ NPT female conduit entry.

SPECIFICATIONS

Service: Compatible liquids and gases.
Wetted Materials: Pressure Chamber: 316 SS; Diaphragm: Fluorocarbon.
Temperature Limit: -40 to 175°F (-40 to 80°C).
Pressure Limits: 750 psig (51 bar).
Enclosure Rating: No rating for open construction. Installed properly within an optional A-447 enclosure meets NEMA 4X (IP66) standards.
Switch Type: SPDT snap switch.
Electrical Rating: 15 A @ 120/240/480 VAC; 1/8 HP @ 125 VAC; 1/4 HP @ 250 VAC.
Electrical Connection: Screw terminals.
Process Connection: 1/4″ female NPT and 1/2″ male NPT.
Mounting Orientation: Within 20° of vertical.
Set Point Adjustment: Knurled screw cap with indicating scale.
Deadband: Fixed. See deadband chart.
Weight: 10.5 oz (297 g).
Agency Approvals: CE, cUL, UL.

OPTION

Weatherproof enclosure. Optional A-447 enclosure factory installed. To order change "O" to "PC".
Example: A1F-PC-SS-1-1

Fliteway Technologies, Inc.

Treated Water Pump Skid

2129 East Birchwood Ave. Cudahy, WI 53110

(414) 483-5600 1-800-236-3580 FAX (414) 483-1957

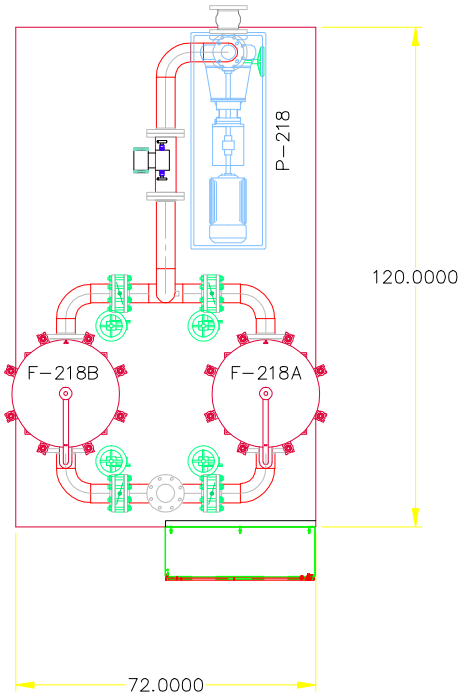

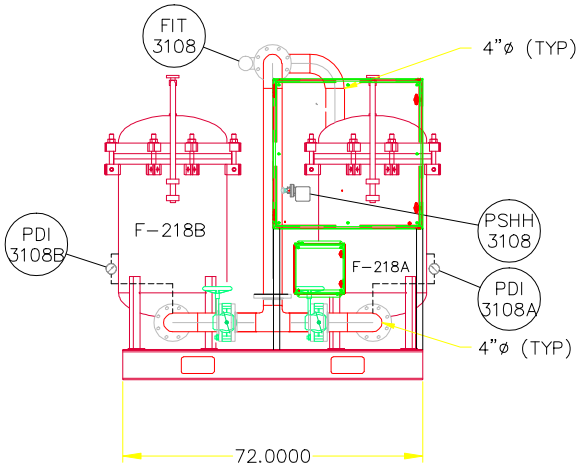

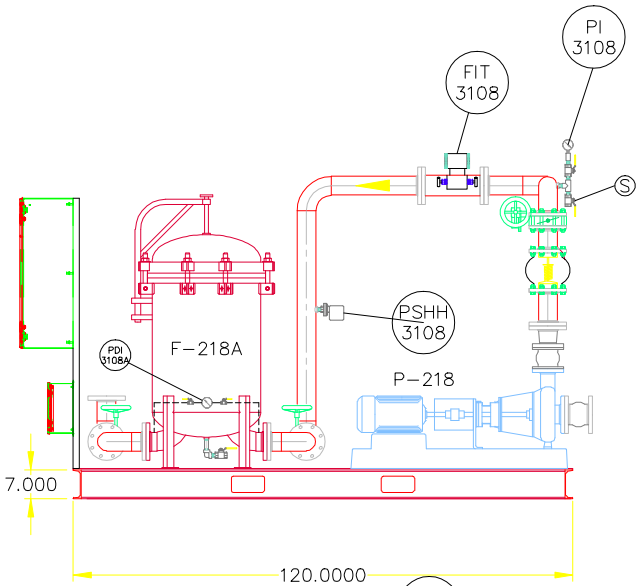

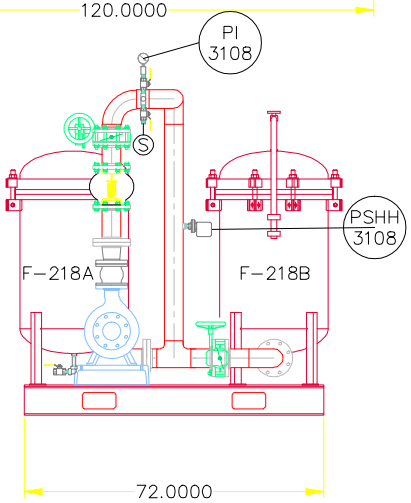

THIS DRAWING IS THE PROPERTY OF
Fliteway Technologies, Inc
2129 EAST BIRCHWOOD AVE
CUDAHY WI, 53110
414.483.5600 414.483.1957
AND IS NOT TO BE REPRODUCED
WITHOUT WRITTEN PERMISSION

6'X10' TREATED WATER PUMP SKID

TECHSAS INC.
KIRTLAND AFB

3/25/16	SIZE	FSCM NO.	DWG NO. Q14617
	SCALE NONE		SHEET 1 OF 1

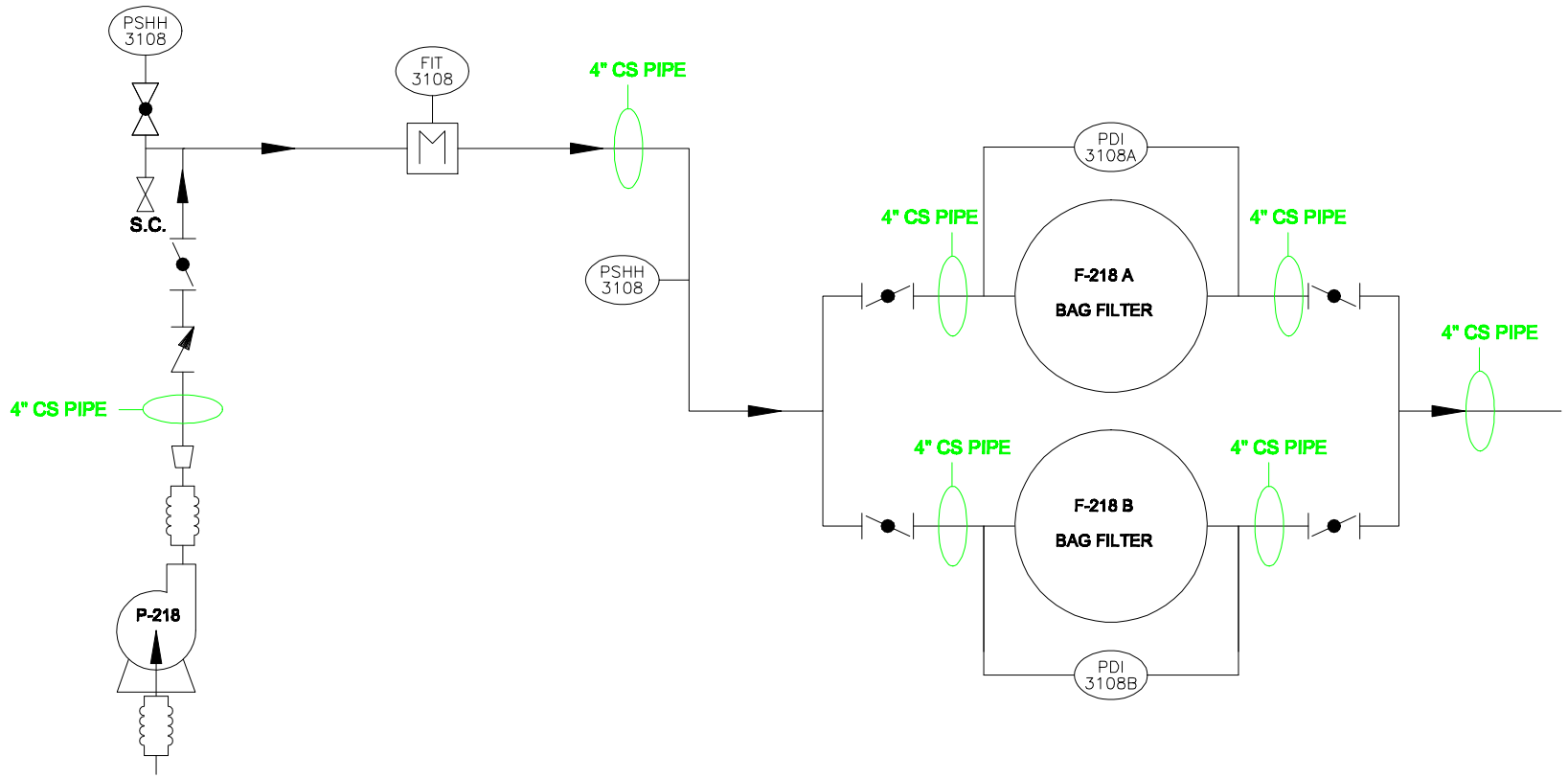

CONCENTRIC REDUCER

S.C. SAMPLE CONNECTION/PORT

CHECK VALVE

BALL VALVE

EXPANSION JOINT

BUTTERFLY VALVE

THIS DRAWING IS THE PROPERTY OF
Fliteway Technologies, Inc
2129 EAST BIRCHWOOD AVE
CUDAHY WI, 53110
414.483.5600 414.483.1957
AND IS NOT TO BE REPRODUCED WITHOUT WRITTEN PERMISSION

3/25/16

6'X10' TREATED WATER P&ID

TECHSAS INC.
KIRTLAND AFB

SIZE	FSCM NO.	DWG NO.
		Q14617

SCALE NONE

SHEET 1 OF 1

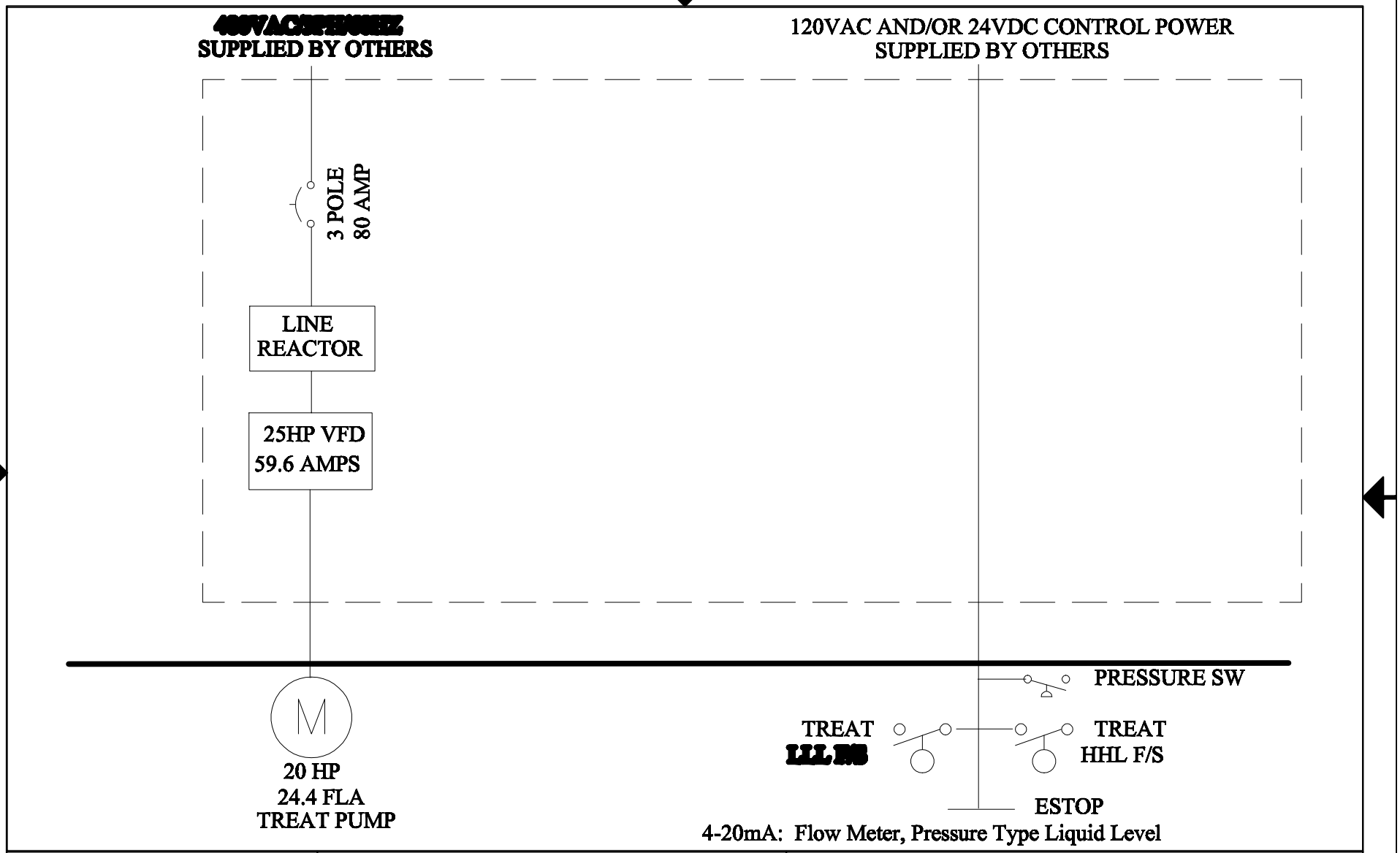

THIS DRAWING IS THE PROPERTY OF
Fliteway Technologies, Inc
2129 East Birchwood Avenue
Cudahy, WI 53110
414.483.5600 414.483.1957
AND IS NOT BE REPRODUCED
WITHOUT WRITTEN PERMISSION

ONE LINE ELECTRICAL DIAGRAM

TREAT PUMP SKID

4/6/16

TECHSAS, Inc

SIZE	FSCM NO.	DWG NO.	REV
		Q14617	2

SCALE NONE | SHEET

FEED PUMP SKID #1

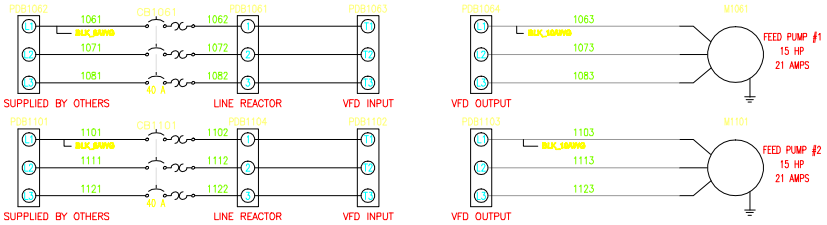

HIGH VOLTAGE PANEL

VFD FEED PUMP #1 WIRING

VFD_TB_12	VFD FAULT - PROVIDED OVER ETHERNET
VFD_TB_13	
VFD_TB_15	VFD RUNNING - PROVIDED OVER ETHERNET
VFD_TB_16	
VFD_TB_25	N
VFD_TB_28	120VAC VFD RUN SIGNAL (FROM MCP)

VFD FEED PUMP #2 WIRING

VFD_TB_12	VFD FAULT - PROVIDED OVER ETHERNET
VFD_TB_13	
VFD_TB_15	VFD RUNNING - PROVIDED OVER ETHERNET
VFD_TB_16	
VFD_TB_25	N
VFD_TB_28	120VAC VFD RUN SIGNAL (FROM MCP)

LOW VOLTAGE JUNCTION BOX

LOW VOLTAGE JBOX

HHL_F/S	120VAC OR 24VDC CONTROL POWER
HHL_F/S	TANK HHL ALARM (DRY CONTACT)
LL_F/S	
LL_F/S	TANK LLL (DRY CONTACT)
PRS._SW	
PRS._SW	HIGH PRESSURE SWITCH ALARM (N.O. DRY CONTACT)
FLOW_METER	24VDC CONTROL POWER
FLOW_METER	FLOW METER 4-20mA SIGNAL
FLOW_METER	FLOW METER SHIELD WIRE
P1_THRM_OL	120VAC CONTROL POWER
P1_THRM_OL	FEED PUMP #1 MOTOR THERMAL OVERLOAD WIRED TO VFD, VIEWED OVER ETHERNET
P2_THRM_OL	
P2_THRM_OL	FEED PUMP #2 MOTOR THERMAL OVERLOAD WIRED TO VFD, VIEWED OVER ETHERNET
LVL_TRANS	24VDC CONTROL POWER
LVL_TRANS	LEVEL TRANSMITTER 4-20mA SIGNAL
LVL_TRANS	LEVEL TRANSMITTER SHIELD WIRE

TREAT WATER PUMP SKID #2

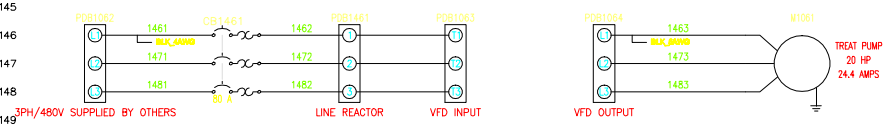

HIGH VOLTAGE PANEL

VFD TREAT PUMP WIRING

VFD_TB_12	VFD FAULT - PROVIDED OVER ETHERNET
VFD_TB_13	
VFD_TB_15	VFD RUNNING - PROVIDED OVER ETHERNET
VFD_TB_16	
VFD_TB_25	N
VFD_TB_28	120VAC VFD RUN SIGNAL (FROM MCP)

LOW VOLTAGE JUNCTION BOX

LOW VOLTAGE JBOX

HHL_F/S	120VAC OR 24VDC CONTROL POWER
HHL_F/S	TANK HHL ALARM (DRY CONTACT)
LL_F/S	
LL_F/S	TANK LLL (DRY CONTACT)
PRS._SW	
PRS._SW	HIGH PRESSURE SWITCH ALARM (N.O. DRY CONTACT)
FM_24V	24VDC CONTROL POWER
FM_TR	FLOW METER 4-20mA SIGNAL
FM_S	FLOW METER SHIELD WIRE
TP_THRM_OL	120VAC CONTROL POWER
TP_THRM_OL	TREATMENT PUMP MOTOR THERMAL OVERLOAD WIRED TO VFD, VIEWED OVER ETHERNET
LVL_TRANS	24VDC CONTROL POWER
LVL_TRANS	LEVEL TRANSMITTER 4-20mA SIGNAL
LVL_TRANS	LEVEL TRANSMITTER SHIELD WIRE

THIS PRINT AND ITS CONTENTS ARE THE PROPERTY OF FLITEWAY AND MUST NOT BE USED FOR ANY PURPOSE NOT AUTHORIZED BY FLITEWAY. DO NOT DISCLOSE, REPRODUCE OR OTHERWISE USE THIS PRINT OR ITS CONTENTS IN ANY MANNER DETRIMENTAL TO THE INTEREST OF FLITEWAY WITHOUT FLITEWAY'S PRIOR WRITTEN CONSENT. FLITEWAY RESERVES ALL RIGHTS OF DESIGN AND INVENTION TO THE EXTENT PERMITTED BY LAW.

CAD SYSTEM	ACADE
SCALE	1:1
UNITS	IN
FORMAT	D

Fliteway Technologies, Inc.
2129 East Birchwood Ave.
Cudahy, WI 53110

DRAWN BY	Josh
Q #	Q14617 R2
DESIGNED FOR	TECHSAS, Inc.
DESCRIPTION	
Drawing Number	

PLOTTED : 12-16-2014

CRANE ENGINEERING SALES

April 1, 2016

Proposal No: J_B1598 - Fliteway
Item No: ITEM 001

MODEL:3196 MTi SIZE:3x4-10H QTY: 1

i-FRAME™

Operating Conditions

SERVICE

LIQUID	Water , Temp. 70.0 deg F, SP.GR 1.000, Viscosity 1.000 cp, rated / max. suction pressure 0.0 / 0.0 psi g
CAPACITY Rated	588.9 gpm
HEAD	89.6 (ft)

Performance at 1750 RPM per HI 14.6 1B basis power

PUBLISHED EFFY	0.0% (CDS)
RATED EFFY	77.0%
RATED POWER	17.2 hp (Run out 19.0 hp)
NPSHR	4.0 ft
DISCH PRESSURE (R)	38.8 psi g (44.2 psi g @ Shut off) based on 0.0 psi g rated suction pressure
PERF. CURVE	2929-7 (Rotation CW viewed from coupling end)
SHUT OFF HEAD	102.0 ft
MIN. FLOW	Continuous Stable: 150.0 gpm Hydraulic: 150.0 gpm Thermal: N/A

Materials

CONSTRUCTION	Ductile iron with 316SS impeller
CASING	Ductile iron (max.casing pressure @ rated temperature 250.0 psi g)
ST.BOX COVER	Ductile iron
IMPELLER	316SS - Open (10.0000 in rated, max=10.0000 in, min=6.0000 in)
CASING GASKETS	Aramid Fiber with EPDM and Silicate Filler
IMPELLER O-RING	Teflon
SHAFT MATERIAL	SAE 4140
SHAFT SLEEVE	316SS
LUBRICATION	Flood oil
SEAL CHAMBER	Taper bore plus with axial ribs
GLAND	316SS Flush high performance
BEARINGS	6309 (Inboard) 3309 (Outboard)
COUPLING	Rexnord - Omega Rex Elastomer- ES-5 (standard orange element)-S.F. 1.00
COUPLING GUARD	Carbon steel
BASEPLATE	Cast iron camber top D00057A

Sealing Method

MECHANICAL SEAL	John Crane 4610 C/SC/Viton - (Cartridge - Single)

Flanges

150# flat face

Frame Connections

Bearing frame drain
Frame cooler access
Oil fill connection

Frame features

Ductile iron frame adapter
Inpro VBXX-D Hybrid Bearing Isolators
Premium Severe Duty Thrust Bearings
i-ALERT®2 Bluetooth Smart Equipment Health Monitor

Assembly and Testing

Casing & Cover - Standard hydro test
Impeller balanced to ISO G6.3

Painting

Goulds Blue standard painting

Warranty

5 Year Extended Warranty (All the components, manufactured by ITT Goulds pumps, in the liquid end and power end are covered).

Driver : Electric motor Manufacturer : Pump mfg's Choice

FURNISHED BY	Pump mfg	MOUNTED BY	Pump mfg
RATING	20.0 hp (14.9 KW)	ENCLOSURE	TEFC - Premium Efficiency
PHASE/FREQ/VOLTS	3/60 Hz/460	SPEED	1800 RPM
INSULATION/SF	F/1.15	FRAME	256T

Freight Terms

Freight invoices received from ITT partner carriers are proprietary information and cannot be divulged for any reason. ITT will provide an ITT generated freight invoice upon request.

Weights and Measurements

TOTAL NET UNIT WEIGHT / VOLUME	**728.2 lb / 13.1 ft³**
TOTAL GROSS UNIT WEIGHT / GROSS VOLUME	**904.2 lb / 35.1 ft³**

Program Version 1.56.0.1

Drawing Revision Limit

Drawings returned with status approved as noted or revise and re-submit will be corrected and resubmitted only once. Thereafter, additional comments or revisions to these drawings will incur a charge of $250 per drawing.

Our offer does not include specific review and incorporation of any Statutory or Regulatory Requirements and the offer is limited to the requirements of the design specifications. Should any Statutory or Regulatory requirements need to be reviewed and incorporated then the Customer is responsible to identify those and provide copies for review and revision of our offer.

Our quotation is offered in accordance with our comments and exceptions identified in our proposal.

Click here to download the pump Bulletin

Click here to learn more about the new i-FRAME™

GOULDS PUMPS

OUTLINE DRAWING

Model 3196 MTi
Size 3x4-10H

ITT

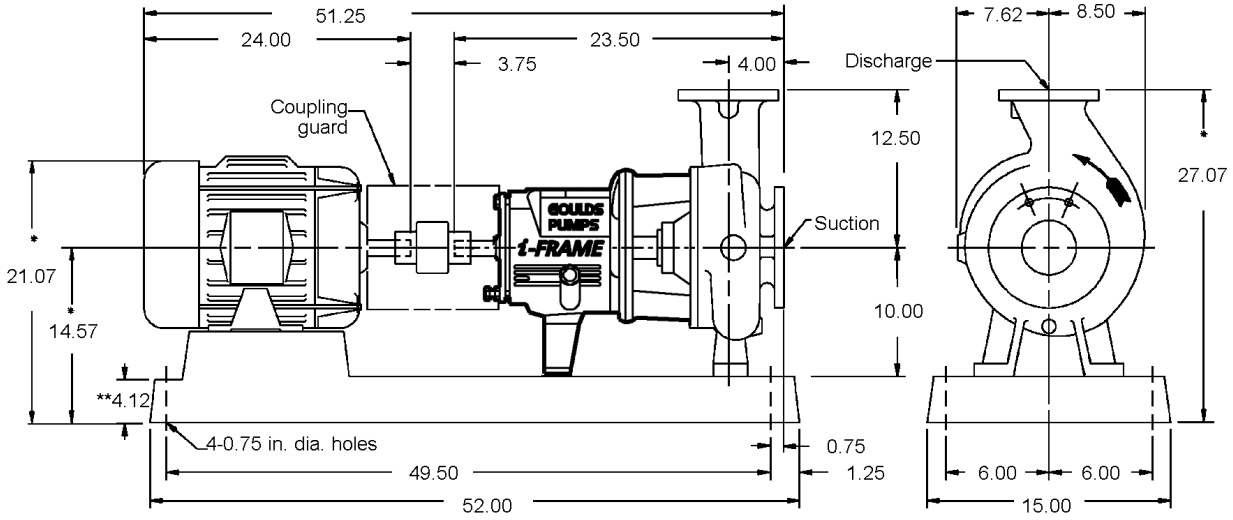

Pump Specification

SUCT.FLANGE SIZE	*4"*	DRILLING	*ANSI 150#*	FACING	*FF*	FINISH	*SERRATED*
DISCH.FLANGE SIZE	*3"*	DRILLING	*ANSI 150#*	FACING	*FF*	FINISH	*SERRATED*
PUMP ROTATION (LOOKING AT PUMP FROM MOTOR)			*CW*				
TYPE OF LUBRICATION	*FLOOD OIL*					COOLED	*NO*
TYPE OF STUFFING BOX	*TAPER BORE PLUS WITH AXIAL RIBS*					COOLED	*NO*
TYPE OF SEALING	*MECHANICAL SEAL*						

Weights and Measurements

PUMP	*295.0 lb*
MOTOR/CPLG	*270.0/8.2 lb*
BASEPLATE	*155.0 lb*
TOTAL	*728.2 lb*
GR.VOLUME w/BOX	*35.1 ft³*
GR.WEIGHT w/BOX	*904.2 lb*

Motor Specification

MOTOR BY	*PUMP MFG*	MOUNT BY	*PUMP MFG*	MFG.	*PUMP MFG'S CHOICE*
FRAME	*256T*	POWER	*20.0 hp*	RPM	*1800*
PHASE	*3*	FREQUENCY	*60 HZ*	VOLTS	*460*
INSULATION	*F*	S.F.	*1.15*		
ENCLOSURE	*TEFC - PREMIUM EFFICIENCY*				

Notes and References

- MTR DIMENSIONS ARE APPROXIMATE
- INSTALL FOUNDATION BOLTS IN PIPE SLEEVES
- ALLOW FROM 0.75 to 1.50in. FOR GROUTING. SEE INSTRUCTION BOOK FOR DETAILS.

* Tolerance is -0.38 +0.38

** Foundation bolt grip thickness

Auxiliary Specification

COUPLING BY	*PUMP MFG*	CPLG TYPE	*REXNORD OMEGA REX ELASTOMER- ES-5 (STANDARD ORANGE*
CPL GUARD BY	*PUMP MFG*	CPLG GUARD MATL	*CARBON STEEL*
BASEPLATE	*CAST IRON CAMBER TOP D00057A*		
MECH.SEAL	*JOHN CRANE 4610 C/SC/VITON*		

FOR PUMP TAPPED OPENINGS REFER TO DWG.:
TJ_B1598 - Fliteway / ITEM 001

DRAWING IS FOR REFERENCE ONLY.
NOT CERTIFIED FOR CONSTRUCTION UNLESS SIGNED.

Customer: CRANE ENGINEERING SALES
Serial No:
Customer P.O. No:
Item No: ITEM 001
End User: Fliteway
Service:

Copyright 2016
ITT Corp

All dimensions are in inches.
Drawing is not to scale
Weights (lbs) are approximate

DRAWING NO J_B1598 - Fliteway/ITEM 001

GOULDS PUMPS TAPPED OPENINGS Model 3196 MTi Size 3x4-10H

ITT

TAPPED OPENINGS MODEL 3196 MTi 3x4-10H ANSI NO. A40

NO.	SIZE	QTY.	PURPOSE	FURNISHED YES/NO	NO.	SIZE	QTY.	PURPOSE	FURNISHED YES/NO
TB	1/2	1	CASING DRAIN	NO	TL1	---	2	FRAME COOLER ACCESS	YES
TC	1/2	1	BY-PASS CONNECTION	NO	TN	1/4	4	GREASE FITTING	NO
TD	3/8	1	DISCH. GAUGE CONNECTION	NO	TN2	1/4	2	OIL MIST INJECTION PORT	NO
TE	3/8	1	SUCTION GAUGE CONNECTION	NO	TY	3/4	1	OIL FILL	YES
TF	1/2	1	BEARING FRAME DRAIN	YES	TS	1	2	SIGHT GLASS/OILER CONN.	YES
TL	1/2	2	FRAME COOLING CONNECTION	NO	TBL	1/4	2	VIB./TEMP. CONNECTION	NO

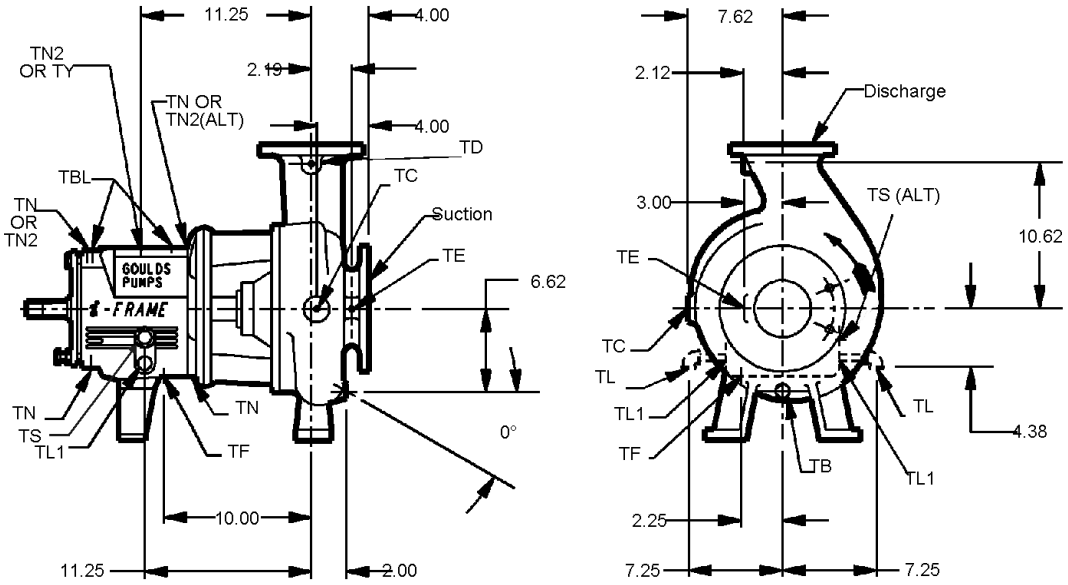

DRAWING IS FOR REFERENCE ONLY.

NOT CERTIFIED FOR CONSTRUCTION UNLESS SIGNED.

Customer: CRANE ENGINEERING SALES
Serial No:
Customer P.O. No:
Item No: ITEM 001
End User: Fliteway
Service:

Copyright 2016
ITT Corp

All dimensions are in inches.

Drawing is not to scale

DRAWING NO J_B1598 - Fliteway/ITEM 001

Model: 3196	Size: 3x4-10H	Group: MTi	60Hz	RPM: 1750	Stages: 1

Job/Inq.No. :
Purchaser : CRANE ENGINEERING SALES
End User: Fliteway
Item/Equip.No. : ITEM 001
Service :
Order No. :

Issued by : Jorie Ballun
Quotation No. : J_B1598 - Fliteway
Certified By :

Date : 04/01/2016
Rev. : 0

Operating Conditions

Liquid:	Water
Temp.:	70.0 deg F
S.G./Visc.:	1.000/1.000 cp
Flow:	588.9 gpm
TDH:	89.6 ft
NPSHa:	0.0 ft
Solid size:	
% Susp. Solids (by wtg):	

Pump Performance

Published Efficiency:		Suction Specific Speed:	9,877 gpm(US) ft
Rated Pump Efficiency:	77.0 %	Min. Hydraulic Flow:	150.0 gpm
Rated Total Power:	17.2 hp	Min. Thermal Flow:	N/A
Non-Overloading Power:	19.0 hp		
Imp. Dia. First 1 Stg(s):	10.0000 in		
NPSHr:	4.0 ft		
Shut off Head:	102.0 ft		
Vapor Press:		Max. Solids Size:	0.6250 in

Notes: 1. Power and efficiency losses are not reflected on the curve below.
2. Elevated temperature effects on performance are not included.

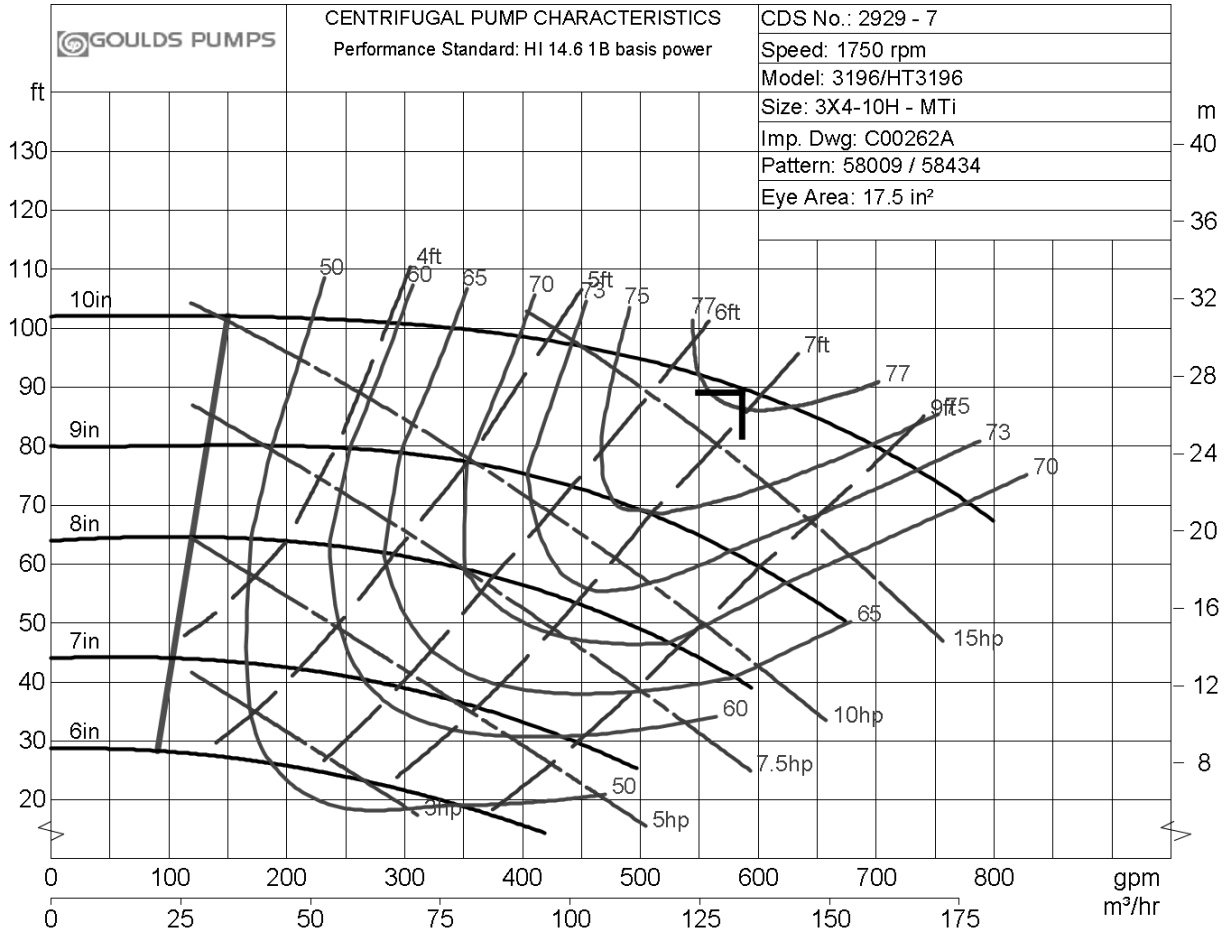

Model: 3196	Size: 3X4-10H	Group: MTi	60Hz	RPM Variable	Stages: 1

Job/Inq.No. :
Purchaser : CRANE ENGINEERING SALES
End User : Fliteway
Item/Equip.No. : ITEM 001
Service :
Order No. :

Issued by : Jorie Ballun
Quotation No. : J_B1598 - Fliteway
Certified By :

Date : 04/01/2016
Rev. : 0

Operating Conditions

Liquid:	Water
Temp.:	70.0 deg F
S.G./Visc.:	1.000/1.000 cp
Flow:	588.9 gpm
TDH:	89.6 ft
NPSHa:	0.0 ft
Solid size:	
% Susp. Solids (by wtg):	
Max. Solids Size:	0.6250 in

Pump Performance @ 1750 RPM

Published Efficiency:	77.0 %	Suction Specific Speed:	9,877 gpm(US) ft
Rated Pump Efficiency:	77.0 %	Min. Hydraulic Flow:	150.0 gpm
Rated Total Power:	17.2 hp	Min. Thermal Flow:	N/A
Non-Overloading Power:	20.0 hp		
Imp. Dia. First 1 Stg(s):	10.0000 in		
NPSHr:	6.8 ft		
Shut off Head:	102.0 ft		
Vapor Press:			

Notes: 1 . Elevated temperature effects on performance are not included.

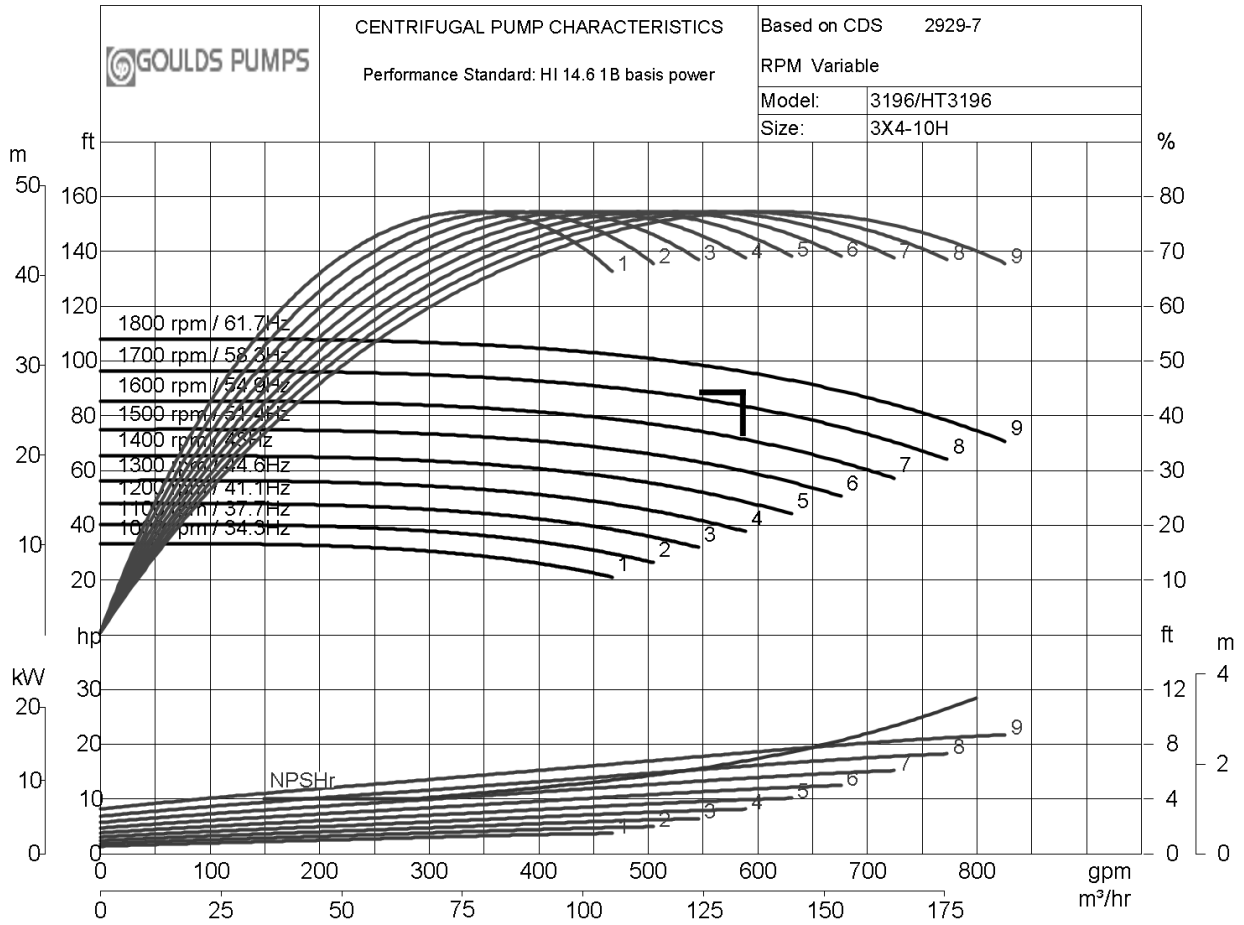

See Feed Pump Skid Section

Fliteway Technologies, Inc.

Treated Water Pump VFD - Control Panel

2129 East Birchwood Ave. Cudahy, WI 53110

(414) 483-5600 1-800-236-3580 FAX (414) 483-1957

FEED PUMP SKID #2

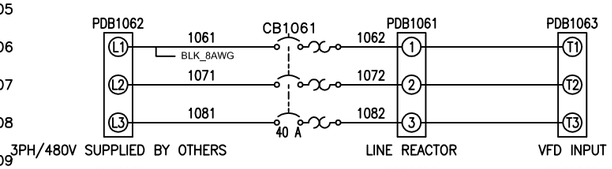

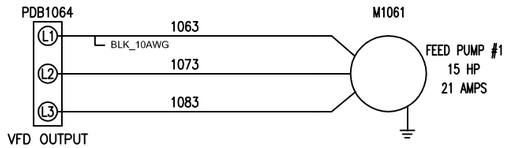

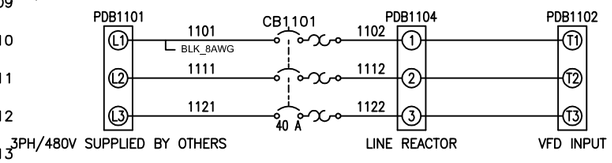

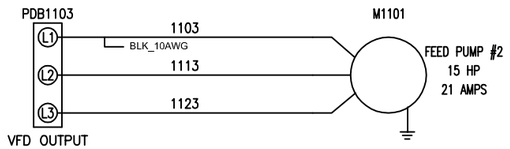

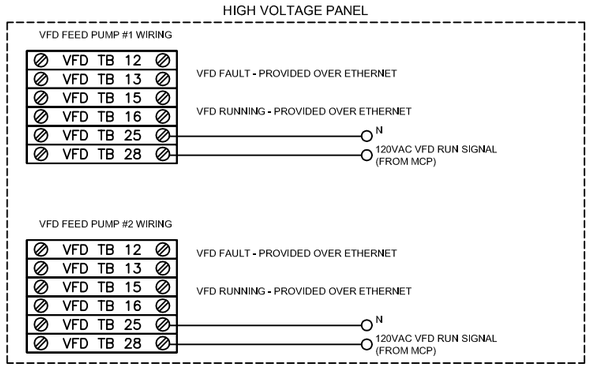

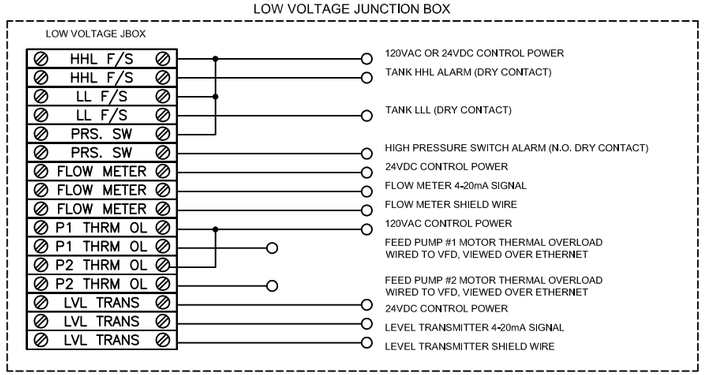

TREAT WATER PUMP SKID #2

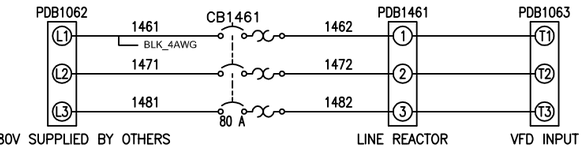

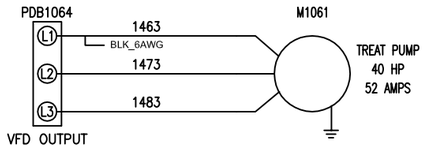

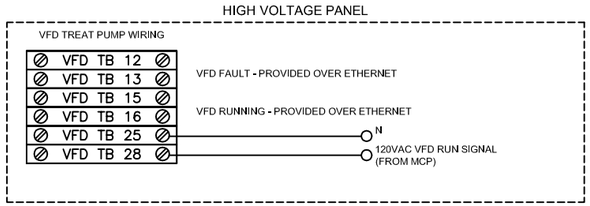

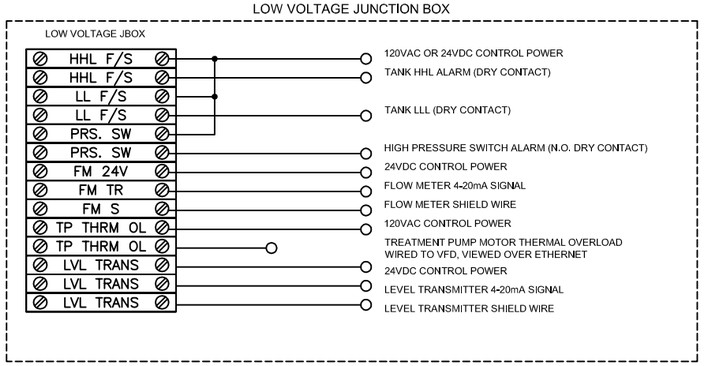

THIS PRINT AND ITS CONTENTS ARE THE PROPERTY OF FLITEWAY AND MUST NOT BE USED FOR ANY PURPOSE NOT AUTHORIZED BY FLITEWAY. DO NOT DISCLOSE, REPRODUCE OR OTHERWISE USE THIS PRINT OR ITS CONTENTS IN ANY MANNER DETRIMENTAL TO THE INTEREST OF FLITEWAY WITHOUT FLITEWAY'S PRIOR WRITTEN CONSENT. FLITEWAY RESERVES ALL RIGHTS OF DESIGN AND INVENTION TO THE EXTENT PERMITTED BY LAW.

CAD SYSTEM	UNITS
ACADE	IN
SCALE	FORMAT
1:1	D

Fliteway Technologies, Inc.
2129 East Birchwood Ave.
Cudahy, WI 53110

DRAWN BY	Q #	DESCRIPTION
Josh	Q14617	
DESIGNED FOR	Drawing Number	
TECHSAS, Inc.	PAGE 1 OF 1	

PLOTTED: 12-15-2015

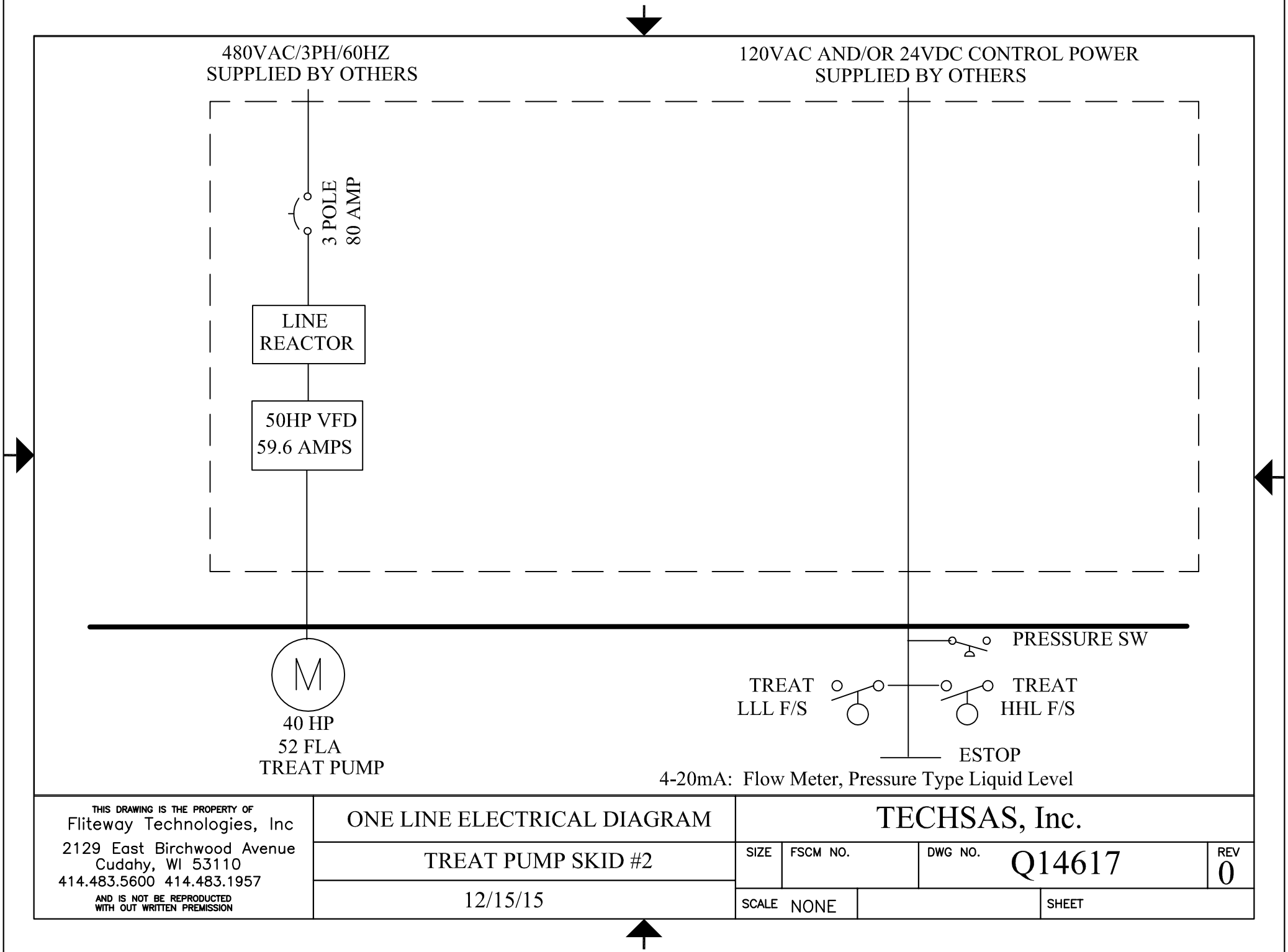

THIS DRAWING IS THE PROPERTY OF
Fliteway Technologies, Inc
2129 East Birchwood Avenue
Cudahy, WI 53110
414.483.5600 414.483.1957
AND IS NOT BE REPRODUCTED
WITH OUT WRITTEN PREMISSION

ONE LINE ELECTRICAL DIAGRAM

TREAT PUMP SKID #2

12/15/15

TECHSAS, Inc.

SIZE	FSCM NO.	DWG NO.	REV
		Q14617	0

SCALE NONE | SHEET

See Feed Pump VFD – Control Panel Section

TRANSMITTAL DOCUMENT

Date:	**9-9-16**	**From:**	**Ed Butler**
To:	**EA Engineering, Science, and Technology, Inc., 320 Gold Ave. SW, Suite 1300 Albuquerque, NM 87102 Devon Jercinovic**	**Job Name:**	**Kirtland AFB, NM Bulk Fuels Facility**
		Reference:	
		Transmittal Method:	**E-mail**
		Sent By:	**Ed Butler**

Submittal	Specification Section	Item Description
4	40 05 13 1.4.3	Welding Procedures

Ed Butler
TECHSAS, Inc.
4819 West Bayshore Drive
Bacliff, TX 77518

"I hereby certify that the (equipment) (material) (article) shown and marked in this submittal is that proposed to be incorporated with the Contract, is in compliance with the contract drawings and specification, can be installed in the allocated spaces, and is submitted for Contractor approval.

Certified by _____.
(Signature when applicable) Date: _____.

Kirtland Air Force Base
Albuquerque, New Mexico

Project: Bulk Fuels Facility

Welding Procedures (Submittal 4)

Owner:	**Kirtland Air Force Base** **US Army Corps of Engineers**
Owner's Agent:	**EA Engineering, Science, and Technology, Inc.,** **320 Gold Ave. SW, Suite 1300** **Albuquerque, NM 87102**
Engineer:	**EA Engineering, Science, and Technology, Inc.,** **320 Gold Ave. SW, Suite 1300** **Albuquerque, NM 87102**
General Contractor:	**TECHSAS, Inc.** **4819 West Bayshore Drive** **Bacliff, TX 77518**
Construction Management:	**Tasman Geosciences** **6899 Pecos Street** **Unit C** **Denver, CO 80221**

TABLE OF CONTENTS

Description:

- **Welding Procedures – Rupert Plumbing and Heating**

RUPERT

PLUMBING AND HEATING

PIPE FABRICATION

Section 40 05 13 1.4.3

WELD PROCEDURES

RUPERT

PLUMBING AND HEATING

PIPE FABRICATION

RPF—60 GMAW FOR CARBON MATERIAL

QW-483 SUGGESTED FORMAT FOR PROCEDURE QUALIFICATION RECORDS (PQR)
(See QW-200.2, Section IX, ASME Boiler and Pressure Vessel Code)
Record Actual Conditions Used to Weld Test Coupons

Company Name: Rupert Pipe Fabrication
Procedure Qualification Record No.: RPF-60 Date: July 16, 2007
WPS No.: RPF-61 & RPF-62
Welding Process(es): (GMAW) Gas Metal Arc Welding
Types (Automatic, Manual, Machine, or Semi-Auto.): Semi-Automatic

Joints (QW-402)

Single-V-Groove Weld

GMAW Semi-Auto Butt Weld
Bevel Angle = 37-1/2 Degrees
Root Opening = 1/8"
Bevel Land = None

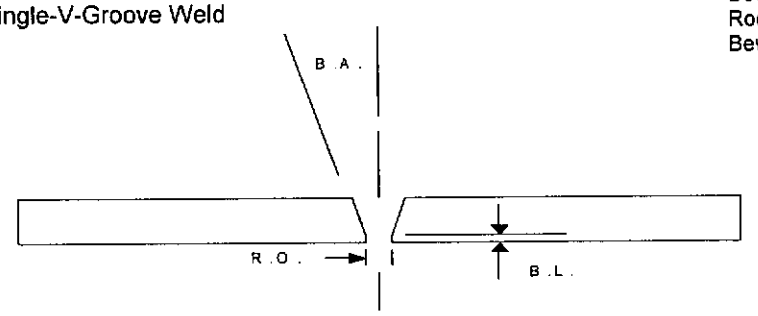

Groove Design of Test Coupon

(For combination qualifications, the deposited weld metal thickness shall be recorded for each filler metal or process used.)

BASE METALS (QW-403)

Material Spec.: SA-106 Carbon Steel
Type or Grade: Grade B
P-No.: 1 to P-No.: 1
Thickness of Test Coupon: 0.237", 0.432" & 0.531"
Diameter of Test Coupon: 4" Dia., 6" Dia & 4" Dia
Other:

FILLER METALS (QW-404)

SFA Specification: SFA 5.18
AWS Classification: ER70S-6
Filler Metal F-No.: 6
Weld Metal Analysis A-No.: 1
Size of Filler Metals: .045" in Dia.
Supplemental Filler Metal: None
Other:
Weld Metal Thickness: 0.237", 0.432" & 0.531"
Other: No single pass shall exceed ½" thickness

POSITION (QW-405)

Position of Groove: 6G (Fixed 45° Position)
Weld Progression (Uphill, Downhill): Downhill
Other:

PREHEAT (QW-406)

Preheat Temp.: 70° F.
Interpass Temp.: 350° F. Max
Other:

POSTWELD HEAT TREATMENT (QW-407)

Temperature: None
Time: N/A
Other: N/A

Gas (QW-408)

	Gas(es)	Percent Composition (Mixture)	Flow Rate
Shielding	CO_2	100% CO_2	25-35 CFH
Trailing	N/A		
Backing	N/A		

ELECTRICAL CHARACTERISTICS (QW-409)

Current: Direct Current
Polarity: Reverse Polarity (DCEP)
Amps.: 130-180 Volts: 14-22
Tungsten Electrode Size: N/A
Other: GMAW Mode of Transfer: STT Short Circuit Transfer

TECHNIQUE (QW-410)

Travel Speed: 4-18 IPM
String or Weave Bead: String
Oscillation: None
Multipass or Single Pass (per side): Multipass
Single or Multiple Electrodes: Single
Other:

QW-483 (Back)

PQR No. RPF-60

Tensile Test (QW-150)

Specimen No.	Width	Thickness	Area	Ultimate Total Load lb	Ultimate Unit Stress psi	Type of Failure & Location
4" X .237"-T1	.864"	0.239"	0.2065 $in.^2$	13,750	66,600	Base Yield
4" X .237"-T2	.847"	0.230"	0.1948 $in.^2$	13,300	68,300	Base Yield
6" X .432"-T1	.374"	0.414"	0.1548 $in.^2$	12,100	78,200	Base Yield
6" X .432"-T2	.334"	0.408"	0.1363 $in.^2$	11,000	80,700	Base Yield
4" X .531"-T1	.375"	0.502"	0.1883 $in.^2$	14,300	75,900	Base Yield
4" X .531"-T2	.357"	0.504"	0.1792 $in.^2$	14,700	82,300	Base Yield

Guided Bend Tests (QW-160)

Type and Figure No.	Result
4" X .237"-Root Bends No. 1 & 2 as per QW-462.3(a)	Acceptable
4" X .237"-Face Bends No. 1 & 2 as per QW-462.3(a)	Acceptable
6" X .432"-Side Bends No. 1, 2, 3 & 4 as per QW-462.2	Acceptable
4" X 531"- Side Bends No. 1, 2, 3 & 4 as per QW-462.2	Acceptable

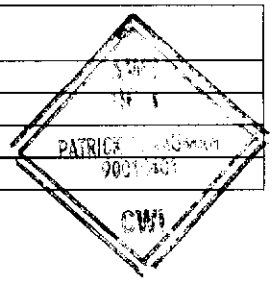

Toughness Tests (QW-170)

Specimen No.	Notch Location	*Specimen Size	Test Temp.	Impact Values			
				Ft. Lbs.	Ratio-Ft. Lbs	Joules	Ratio-Joules

Fillet-Weld Test (QW-180)

Result – Satisfactory: Yes _____ No _____ Penetration into Parent Metal: Yes _____ No _____

Micro – Results _____

Other Tests

Type of Test _____

Deposit Analysis _____

Other Visual Examination-Acceptable per (QW-194)

Welder's Name M. Rupert/R. Rupert Clock No. 2908/6915 Stamp No. MR/RR

Tests conducted by: P. Bauman-Atomic Inspection Labs Laboratory Test No. AIL-PQR-429

We certify that the statements in this record are correct and that the test welds were prepared, welded, and tested in accordance with the requirements of Section IX of the ASME Code.

Manufacturer **Rupert Pipe Fabrication**

Date July 16, 2007 By _____

(Detail of record of tests are illustrative only and may be modified to conform to the type and number of tests required by the Code.)

QW-482 SUGGESTED FORMAT FOR WELDING PROCEDURE SPECIFICATION (WPS)
(See QW-200.1, Section IX, ASME Boiler and Pressure Vessel Code)

Company Name Rupert Pipe Fabrication By: R. Rupert-Rupert Pipe Fabrication
Welding Procedure Specification No. RPF-61 Date 07/16/07 Supporting PQR No.(s) RPF-60
Revision No. -0- Date
Welding Process(es) (GMAW) Gas Metal Arc Welding Type(s) Semi-Automatic
(Automatic, Manual, Machine, or Semi-Auto.)

Joints (QW-402) Details →

Joint Design Single-V-Groove Weld
Backing (Yes) (No) XX
Backing Material (Type) None Used
(Refer to both backing and retainers)

☐ Metal ☐ Nonfusing Metal

☐ Nonmetallic ☐ Other

Sketches, Production Drawings, Weld Symbols or Written Description should show the general arrangement of the parts to be welded. Where applicable, the root spacing and the details of weld groove may be specified.

(At the option of the Mfgr., sketches may be attached to illustrate joint design, weld layers and bead sequence, e.g. for notch toughness procedures, for multiple process procedures, etc.)

GMAW Sem i-Auto Butt Weld
Bevel Angle = 37-1/2 Degrees
Root opening = 1/8",+/- 1/16"
Bevel Land = 0", +/- 1/32

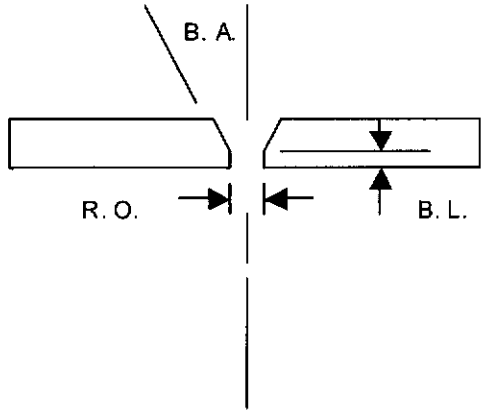

*** BASE METALS (QW-403)**

P-No. 1 Group No. 1 to P-No. 1 Group No. 1
Or
Specification type and grade
To Specification type and grade
Or
Chem. Analysis and Mech. Prop.
to Chem. Analysis and Mech. Prop.
Thickness Range:
Base Metal: Groove 0.119" up to 1" Fillet All Thicknesses
Pipe Dia. Range: Groove All Diameters Fillet All Diameters
Other

*** Filler Metals (QW-404)**			
Spec. No. (SFA)	SFA 5.18		
AWS No. (Class)	ER70S-6		
F-No.	6		
A-No.	1		
Size of Filler Metals	0.045" in Dia.		
Weld Metal Thickness Range: Groove:	1" Max		
Fillet:	All Thicknesses		
Electrode-Flux (Class)	N/A		
Flux Trade Name	N/A		
Consumable Insert	None		
Supplemental Filler Metal	None		
Other	** See Below		
Remarks:	** No Single Pass Shall Exceed ½" Deposited Weld Metal		

* Each base metal-filler metal combination should be recorded individually.

WPS No. RPF-61 Rev. -0-

POSITIONS (QW-405)

Position(s) of Groove: All Position
Welding Progression: Up N/A Down XX
Position(s) of Fillet: All

POSTWELD HEAT TREATMENT (QW-407)

Temperature Range: None
Time Range: N/A

PREHEAT (QW-406)

Preheat Temp. Min.: 70° F.
Interpass Temp. Max.: 350° F. Max.
Preheat Maintenance: N/A
(Continuous or special heating where applicable should be recorded)

Gas (QW-408)

	Gas(es)	Percent Composition (Mixture)	Flow Rate
Shielding	CO_2	100% CO_2	25-35 CFH
Trailing	N/A		
Backing	N.A		

ELECTRICAL CHARACTERISTICS (QW-409)

Current AC or DC: Direct Current Polarity: Reverse (DCEP)
Amps (Range): 130-180 Volts (Range): 14-22

(Amps and volts range should be recorded for each electrode size, Position, and thickness, etc. This information may be listed in a tabular form similar to that shown below.)

Tungsten Electrode Size and Type: N/A
(Pure Tungsten, 2% Thoriated, etc.)
Mode of Metal Transfer for GMAW: STT Short Circuit Transfer
(Spray arc, short circuiting arc, etc.)
Electrode Wire feed speed range: 110-220 IPM

TECHNIQUE (QW-410)

String or Weave Bead: String or Weave
Orifice or Gas Cup Size: ½" to ¾" Diameter Nozzle
Initial and Interpass Cleaning (Brushing, Grinding, etc.): Abrasive Grinding, Hand or Power Brush Between Passes
Method of Back Gouging: N/A
Oscillation: N/A
Contact Tube to Work Distance: 1/2" to 3/4"
Multiple or Single Pass (per side): Multiple Pass or *Single Pass (See Below)
Multiple or Single Electrodes: Single
Travel Speed (Range): 4-18 IPM
Peening: Not Allowed
Other: *No Single Pass Shall Exceed ½" Deposited Weld Metal

Weld Layer(s)	Process	Filler Metal Class	Filler Metal Dia.	Current Type Polar.	Current Amp. Range	Volt Range	Travel Speed Range	Other (e.g., Remarks, Comments, Hot Wire Addition, Technique, Torch Angle, Etc.)
1	GMAW	ER70S-6	.045"	DCEP	130-180	14-22	4-18 IPM	
2	GMAW	ER70S-6	.045"	DCEP	130-180	14-22	4-18 IPM	
As Required To Complete	GMAW	ER70S-6	.045"	DCEP	130-180	14-22	4-18 IPM	

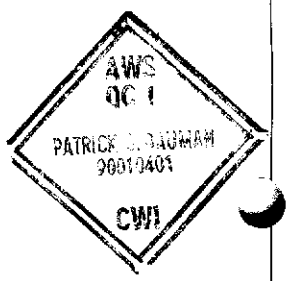

QW-482 SUGGESTED FORMAT FOR WELDING PROCEDURE SPECIFICATION (WPS)
(See QW-200.1, Section IX, ASME Boiler and Pressure Vessel Code)

Company Name **Rupert Pipe Fabrication** By: R. Rupert-Rupert Pipe Fabrication
Welding Procedure Specification No. **RPF-62** Date 07/16/2007 Supporting PQR No.(s) RPF-60
Revision No. -0- Date N/A
Welding Process(es) (GMAW) Gas Metal Arc Welding Type(s) Semi-Automatic
(Automatic, Manual, Machine, or Semi-Auto.)

Joints (QW-402) Details →

Joint Design Lap & Tee Fillet Weld
Backing (Yes) XX (No)
Backing Material (Type) As Fit Base Metal
(Refer to both backing and retainers)

XX Metal ☐ Nonfusing Metal

☐ Nonmetalic ☐ Other

Sketches, Production Drawings, Weld Symbols or Written Description should show the general arrangement of the parts to be welded. Where applicable, the root spacing and the details of weld groove may be specified.

(At the option of the Mfgr., sketches may be attached to illustrate joint design, weld layers and bead sequence, e.g. for notch toughness procedures, for multiple process procedures, etc.)

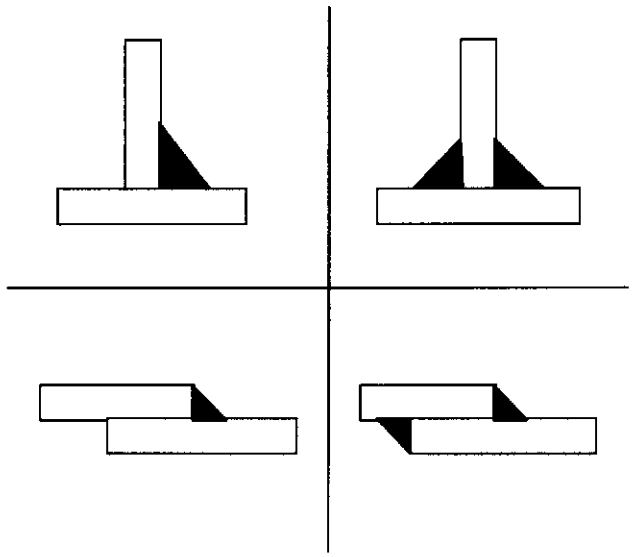

*** BASE METALS (QW-403)**

P-No. 1 Group No. 1 to P-No. 1 Group No. 1
Or
Specification type and grade
To Specification type and grade
Or
Chem. Analysis and Mech. Prop.
to Chem. Analysis and Mech. Prop.
Thickness Range:
Base Metal: Groove N/A Fillet All Thicknesses
Pipe Dia. Range: Groove N/A Fillet All Diameters
Other

*** Filler Metals (QW-404)**			
Spec. No. (SFA)	SFA 5.18		
AWS No. (Class)	ER70S-6		
F-No.	6		
A-No.	1		
Size of Filler Metals	0.045" Diameter		
Weld Metal Thickness Range:			
Groove:	N/A		
Fillet:	All Thicknesses		
Electrode-Flux (Class)	N/A		
Flux Trade Name	N/A		
Consumable Insert	None		
Supplemental Filler Metal	None		
Other	* See below		
Remarks: * No Single Pass Greater Than ½" Deposited Weld Metal			

* Each base metal-filler metal combination should be recorded individually.

WPS No. RPF-62 Rev. -0-

POSITIONS (QW-405)

Position(s) of Groove: N/A
Welding Progression: Up N/A Down XX
Position(s) of Fillet: All Position

POSTWELD HEAT TREATMENT (QW-407)

Temperature Range: None
Time Range: N/A

PREHEAT (QW-406)

Preheat Temp. Min.: 70° F.
Interpass Temp. Max.: 350° F. Max.
Preheat Maintenance: N/A
(Continuous or special heating where applicable should be recorded)

Gas (QW-408)

	Gas(es)	Percent Composition (Mixture)	Flow Rate
Shielding	CO_2	100% CO_2	25-35 CFH
Trailing	N/A		
Backing	N/A		

ELECTRICAL CHARACTERISTICS (QW-409)

Current AC or DC: **Direct Current** Polarity: Reverse (DCEP)
Amps (Range): 130-180 Volts (Range): 14-22

(Amps and volts range should be recorded for each electrode size, Position, and thickness, etc. This information may be listed in a tabular form similar to that shown below.)

Tungsten Electrode Size and Type: N/A
(Pure Tungsten, 2% Thoriated, etc.)
Mode of Metal Transfer for GMAW: **STT** Short Circuit Transfer
(Spray arc, short circuiting arc, etc.)
Electrode Wire feed speed range: 110-220 IPM

TECHNIQUE (QW-410)

String or Weave Bead: String or Weave
Orifice or Gas Cup Size: ½" to ¾" Diameter Nozzle
Initial and Interpass Cleaning (Brushing, Grinding, etc.): Abrasive Grinding, Hand or Power Brush Between Passes
Method of Back Gouging: N/A
Oscillation: None
Contact Tube to Work Distance: ½" to 3/4"
Multiple or Single Pass (per side): Multiple Pass or *Single Pass (See Below)
Multiple or Single Electrodes: Single
Travel Speed (Range): 4-18 IPM
Peening: None
Other: *No Single Pass Greater than ½" Deposited Weld Metal

Weld Layer(s)	Process	Filler Metal Class	Filler Metal Dia.	Current Type Polar.	Current Amp. Range	Volt Range	Travel Speed Range	Other (e.g., Remarks, Comments, Hot Wire Addition, Technique, Torch Angle, Etc.)
1	GMAW	ER70S-6	0.045"	DCEP	130-180	14-22	4-18 IPM	
As Required To Complete	GMAW	ER70S-6	0.045"	DCEP	130-180	14-22	4-18 IPM	

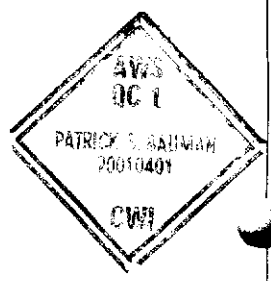

QW-484 SUGGESTED FORMAT FOR WELDER/WELDING OPERATOR PERFORMANCE QUALIFICATIONS (WPQ)

(See QW-301, Section IX, ASME Boiler and Pressure Vessel Code)

Welder's Name: Ron Rupert | Clock number: 6915 | Stamp no.: RR

Welding process(es) used: (GMAW) Gas Metal Arc Welding | Type: Semi-Automatic

Identification of WPS followed by welder during welding of test coupon: RPF-61

Base Material(s) welded: SA-106, Grade B | Thickness: 0.237", 0.432" & 0.531"

Manual or Semiautomatic Variables for Each Process (QW-350)	Actual Values	Range Qualified
Backing (metal, weld metal, welded from both sides, flux, etc.) (QW-402)	None	With or Without
ASME P-No. P1 to P1 To ASME P-No. (QW-403)	P1 to P1	P1 thru P11
<> Plate <x> Pipe (enter diameter, if pipe)	4" & 6" Dia.	Pipe 2-7/8" and Over
Filler metal specification (SFA): 5.18 Classification (QW-404)	ER70S-6	
Filler metal F-No.	F6	All F6 Series Wire
Consumable insert for GTAW or PAW	N/A	N/A
Weld deposit thickness for each welding process	0.237", 0.432" & 0.531"	Up to 1"
Welding position (1G, 5G, etc.) (QW-405)	6G	All Position
Progression (uphill/downhill)	N/A	N/A
Backing gas for GTAW, PAW, or GMAW; fuel gas for OFW (QW-408)	None	With or Without
GMAW transfer mode (QW-409)	**STT** Short Circuit Transfer	**STT** Short Circuit Transfer
GTAW welding current type/polarity	N/A	N/A

Machine Welding Variables for the Process Used (QW-360)	Actual Values	Range Qualified
Direct/remote visual control		
Automatic voltage control (GTAW)		
Automatic joint tracking		
Welding position (1G, 5G, etc.)		
Consumable insert		
Backing (metal, weld metal, welded from both sides, flux, etc.)		

Guided Bend Test Results

Guided Bend Tests Type	<X > QW-462 (Side) Results	< X > QW-462.3(a) Trans. R & F Type	< > QW-462.3(b) (Long. R & F) Results
4" X .237" Root Bends 1 & 2		Acceptable	
4" X .237" Face Bends 1 & 2		Acceptable	
6" X .432" Side Bends 1, 2 ,3 & 4	Acceptable		
4" X .531" Side Bends 1, 2 ,3 & 4	Acceptable		

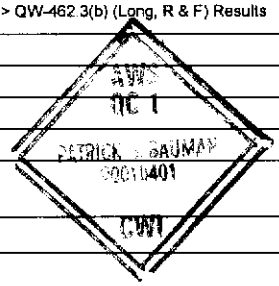

Visual Examination results (QW-302.4): Visual Examination – Acceptable – per (QW-194)

Radiographic test results (QW-304 and QW-305): Radiographic Examination- Acceptable- per (QW-191)

(For alternative qualification of groove welds by radiography)

Fillet Weld – Fracture test: Length and percent of defects: in.

Macro test fusion: Fillet leg size: in. x in. Concavity/convexity: in.

Welding test conducted by: R. Rupert-Rupert Pipe Fabrication

Mechanical tests conducted by: P. Bauman-Atomic Inspection Labs Laboratory test no.: AIL-WQ-4356

We certify that the statements in this record are correct and that the test coupons were prepared, welded, and tested in accordance with the Requirements of Section IX of the ASME Code.

Organization: **Rupert Pipe Fabrication**

Date: July 16, 2007 By:

QW-484 SUGGESTED FORMAT FOR WELDER/WELDING OPERATOR PERFORMANCE QUALIFICATIONS (WPQ)

(See QW-301, Section IX, ASME Boiler and Pressure Vessel Code)

Welder's Name: Mike Rupert | Clock number: 2908 | Stamp no.: MR

Welding process(es) used: (GMAW) Gas Metal Arc Welding | Type: Semi-Automatic

Identification of WPS followed by welder during welding of test coupon: RPF-61

Base Material(s) welded: SA-106, Grade B | Thickness: 0.237", 0.432" & 0.531"

Manual or Semiautomatic Variables for Each Process (QW-350)	Actual Values	Range Qualified
Backing (metal, weld metal, welded from both sides, flux, etc.) (QW-402)	None	With or Without
ASME P-No. P1 to P1 To ASME P-No. (QW-403)	P1 to P1	P1 thru P11
<> Plate <x> Pipe (enter diameter, if pipe)	4" & 6" Dia.	Pipe 2-7/8" and Over
Filler metal specification (SFA): 5.18 Classification (QW-404)	ER70S-6	
Filler metal F-No.	F6	All F6 Series Wire
Consumable insert for GTAW or PAW	N/A	N/A
Weld deposit thickness for each welding process	0.237", 0.432" & 0.531"	Up to 1"
Welding position (1G, 5G, etc.) (QW-405)	6G	All Position
Progression (uphill/downhill)	N/A	N/A
Backing gas for GTAW, PAW, or GMAW; fuel gas for OFW (QW-408)	None	With or Without
GMAW transfer mode (QW-409)	**STT** Short Circuit Transfer	**STT** Short Circuit Transfer
GTAW welding current type/polarity	N/A	N/A

Machine Welding Variables for the Process Used (QW-360)	Actual Values	Range Qualified
Direct/remote visual control		
Automatic voltage control (GTAW)		
Automatic joint tracking		
Welding position (1G, 5G, etc.)		
Consumable insert		
Backing (metal, weld metal, welded from both sides, flux, etc.)		

Guided Bend Test Results

Guided Bend Tests Type	<X > QW-462 (Side) Results	< X > QW-462.3(a) Trans. R & F Type	< > QW-462.3(b) (Long. R & F) Results
4" X .237" Root Bends 1 & 2		Acceptable	
4" X .237" Face Bends 1 & 2		Acceptable	
6" X .432" Side Bends 1, 2 ,3 & 4	Acceptable		
4" X .531" Side Bends 1, 2 ,3 & 4	Acceptable		

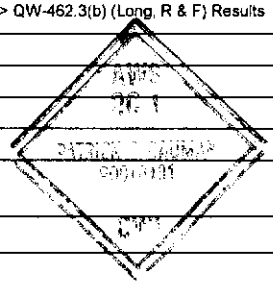

Visual Examination results (QW-302.4): Visual Examination – Acceptable – per (QW-194)

Radiographic test results (QW-304 and QW-305): Radiographic Examination- Acceptable- per (QW-191)

(For alternative qualification of groove welds by radiography)

Fillet Weld – Fracture test: ____ Length and percent of defects: ____ in.

Macro test fusion: ____ Fillet leg size: ____ in. x ____ in. Concavity/convexity: ____ in.

Welding test conducted by: R. Rupert-Rupert Pipe Fabrication

Mechanical tests conducted by: P. Bauman-Atomic Inspection Labs Laboratory test no.: AIL-WQ-4357

We certify that the statements in this record are correct and that the test coupons were prepared, welded, and tested in accordance with the Requirements of Section IX of the ASME Code.

Organization: **Rupert Pipe Fabrication**

Date: July 16, 2007 By: ____

QW-484 SUGGESTED FORMAT FOR WELDER/WELDING OPERATOR PERFORMANCE QUALIFICATIONS (WPQ)
(See QW-301, Section IX, ASME Boiler and Pressure Vessel Code)

Welder's Name: Elias Gallegos | Clock number: 7226 | Stamp no.: EG

Welding process(es) used: (GMAW) Gas Metal Arc Welding | Type: Semi-Automatic

Identification of WPS followed by welder during welding of test coupon: RPF-61

Base Material(s) welded: SA-106, Grade B | Thickness: .250"

Manual or Semiautomatic Variables for Each Process (QW-350)	Actual Values	Range Qualified
Backing (metal, weld metal, welded from both sides, flux, etc.) (QW-402)	None	With or Without
ASME P-No. P1 to P1 To ASME P-No. (QW-403)	P1 to P1	P1 thru P11
<> Plate <x> Pipe (enter diameter, if pipe)	6" Dia.	Pipe 2-7/8" and Over
Filler metal specification (SFA): 5.18 Classification (QW-404)	ER70S-6	
Filler metal F-No.	F6	All F6 Series Wire
Consumable insert for GTAW or PAW	N/A	N/A
Weld deposit thickness for each welding process	.250"	Up to .500"
Welding position (1G, 5G, etc.) (QW-405)	1G	Flat
Progression (uphill/downhill)	N/A	N/A
Backing gas for GTAW, PAW, or GMAW; fuel gas for OFW (QW-408)	None	With or Without
GMAW transfer mode (QW-409)	**STT** Short Circuit Transfer	**STT** Short Circuit Transfer
GTAW welding current type/polarity	N/A	N/A

Machine Welding Variables for the Process Used (QW-360)	Actual Values	Range Qualified
Direct/remote visual control		
Automatic voltage control (GTAW)		
Automatic joint tracking		
Welding position (1G, 5G, etc.)		
Consumable insert		
Backing (metal, weld metal, welded from both sides, flux, etc.)		

Guided Bend Test Results

Guided Bend Tests Type	<X > QW-462 (Side) Results	< X > QW-462.3(a) Trans. R & F Type	< > QW-462.3(b) (Long. R & F) Results
6" X .250" Root Bends 1 & 2		Acceptable	
6" X .250" Face Bends 1 & 2		Acceptable	

Visual Examination results (QW-302.4): Visual Examination – Acceptable – per (QW-194)

Radiographic test results (QW-304 and QW-305): Radiographic Examination- Acceptable- per (QW-191)

(For alternative qualification of groove welds by radiography)

Fillet Weld – Fracture test: ____ Length and percent of defects: ____ in.

Macro test fusion: ____ Fillet leg size: ____ in. x ____ in. Concavity/convexity: ____ In.

Welding test conducted by: M. Rupert-Rupert Pipe Fabrication

Mechanical tests conducted by: Klay L. Roberts-Atomic Inspection Labs Laboratory test no.: AIL-WQ-5632

We certify that the statements in this record are correct and that the test coupons were prepared, welded, and tested in accordance with the Requirements of Section IX of the ASME Code.

Organization: **Rupert Pipe Fabrication**

Date: July 3, 2012 By: ____

(12/94) This form (E00008) may be obtained from the order Dept., ASME, 22 Law Drive, Box 2300, Fairfield, NJ 07007-2300. Reprint 3/96

RUPERT

PLUMBING AND HEATING

PIPE FABRICATION

RPF—505 SMAW FOR CARBON MATERIAL

QW-483 SUGGESTED FORMAT FOR PROCEDURE QUALIFICATION RECORDS (PQR)
(See QW-200.2, Section IX, ASME Boiler and Pressure Vessel Code)
Record Actual Conditions Used to Weld Test Coupons

Company Name: **Rupert Pipe Fabrication.**
Procedure Qualification Record No.: **RPF-505** Date: December 5, 2011
WPS No.: RPF-5051
Welding Process(es): (SMAW) Shielded Metal Arc Welding
Types (Automatic, Manual, Machine, or Semi-Auto.): Manual

Joints (QW-402)

SMAW Manual Butt Weld
Bevel Angle = 37-1/2 Degrees
Root Opening = 3/32"
Groove Land = 3/32"

Single-V-Groove Weld

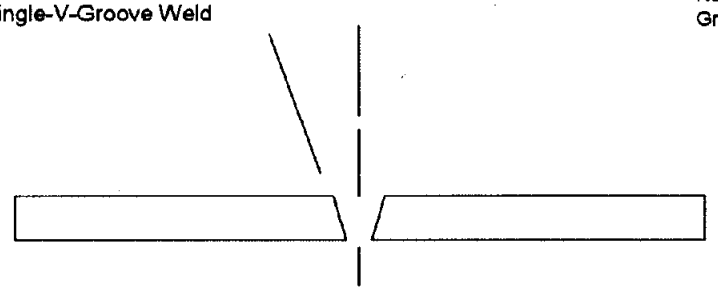

Groove Design of Test Coupon

(For combination qualifications, the deposited weld metal thickness shall be recorded for each filler metal or process used.)

BASE METALS (QW-403)

Material Spec.	SA-106	Carbon Steel
Type or Grade	Grade B	
P-No.	1	to P-No. 1
Thickness of Test Coupon	0.344"	
Diameter of Test Coupon	2" in Diameter	
Other		

FILLER METALS (QW-404)

SFA Specification	SFA 5.1	SFA 5.5
AWS Classification	E6010	E7018
Filler Metal F-No.	3	4
Weld Metal Analysis A-No.	1	1
Size of Filler Metals	1/8"	3/32" & 1/8"
Other		
Weld Metal Thickness	0.119"	.225"

POSITION (QW-405)

Position of Groove: 6G
Weld Progression (Uphill, Downhill): F3-Downhill, F4-Uphill
Other:

PREHEAT (QW-406)

Preheat Temp.: 50° F Min.
Interpass Temp.: 450° F. Max
Other:

POSTWELD HEAT TREATMENT (QW-407)

Temperature: None
Time:
Other:

Gas (QW-408)

	Gas(es)	Percent Composition (Mixture)	Flow Rate
Shielding			
Trailing			
Backing			

ELECTRICAL CHARACTERISTICS (QW-409)

Current: Direct Current
Polarity: Reverse Polarity (DCEP)
Amps.: 80-140 Volts: 23-28
Tungsten Electrode Size: N/A
Other:

TECHNIQUE (QW-410)

Travel Speed: 6-16 IPM
String or Weave Bead: String
Oscillation: N/A
Multipass or Single Pass (per side): Multipass
Single or Multiple Electrodes: Single
Other:

QW-483 (Back)

PQR No. RPF-505

Tensile Test (QW-150)

Specimen No.	Width	Thickness	Area	Ultimate Total Load lb	Ultimate Unit Stress psi	Type of Failure & Location
T1	.755"	0.333"	0.2514 $in.^2$	17,620	70,000	Base Yield
T2	.748"	0.331"	0.2476 $in.^2$	18,100	73,100	Base Yield

Guided Bend Tests (QW-160)

Type and Figure No.	Result
Root Bend No. 1 as per QW-462.3(a)	Acceptable
Face Bend No. 1 as per QW-462.3(a)	Acceptable
Root Bend No. 2 as per QW-462.3(a)	Acceptable
Face Bend No. 2 as per QW-462.3(a)	Acceptable

Toughness Tests (QW-170)

Specimen No.	Notch Location	*Specimen Size	Test Temp.	Impact Values		
				Ft. Lbs.	Joules	Lateral Expansion

Fillet-Weld Test (QW-180)

Result – Satisfactory: Yes _____ No _____ Penetration into Parent Metal: Yes _____ No _____

Micro – Results _____

Other Tests

Type of Test Radiographic Examination-Acceptable per (QW-191)

Deposit Analysis _____

Other Visual Examination-Acceptable per (QW-194)

Welder's Name Michael Rupert Clock No. 2908 Stamp No. MR

Tests conducted by: Atomic Inspection Labs Laboratory Test No. AIL-PQR-505

We certify that the statements in this record are correct and that the test welds were prepared, welded, and tested in accordance with the requirements of Section IX of the ASME Code.

Manufacturer Rupert Pipe Fabrication

Date December 5, 2011 By _____

(Detail of record of tests are illustrative only and may be modified to conform to the type and number of tests required by the Code.)

QW-482 SUGGESTED FORMAT FOR WELDING PROCEDURE SPECIFICATION (WPS)
(See QW-200.1, Section IX, ASME Boiler and Pressure Vessel Code)

Company Name **Rupert Pipe Fabrication.** By: Ron Rupert- Rupert Pipe Fabrication
Welding Procedure Specification No. **RPF-5051** Date 12/06/2011 Supporting PQR No.(s) RPF-505
Revision No. -0- Date N/A
Welding Process(es) (SMAW) Shielded Metal Arc Welding .Type(s) Manual
(Automatic, Manual, Machine, or Semi-Auto.)

Joints (QW-402) Details →

Joint Design Single-V-Groove Weld
Backing (Yes) _____ (No) XX
Backing Material (Type) None Used
(Refer to both backing and retainers)

☐ Metal ☐ Nonfusing Metal

☐ Nonmetalic ☐ Other

Sketches, Production Drawings, Weld Symbols or Written Description should show the general arrangement of the parts to be welded. Where applicable, the root spacing and the details of weld groove may be specified.

(At the option of the Mfgr., sketches may be attached to illustrate joint design, weld layers and bead sequence, e.g. for notch toughness procedures, for multiple process procedures, etc.)

SMAW Manual Butt Weld
Bevel Angle = 37-1/2 Degrees
Root opening = 3/32" +/- 1/16"
Groove Land = 3/32" +/- 1/16"

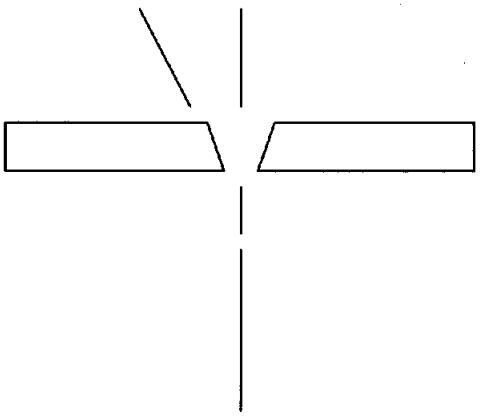

*** BASE METALS (QW-403)**

P-No. 1 Group No. 1-4 to P-No. 1 Group No. 1-4
Or
Specification type and grade
To Specification type and grade
Or
Chem. Analysis and Mech. Prop.
to Chem. Analysis and Mech. Prop.
Thickness Range:
Base Metal: Groove 0.065" up to 0.688" Fillet All Thicknesses
Pipe Dia. Range: Groove 1" and Over Fillet All Diameters
Other

*** Filler Metals (QW-404)**			
Spec. No. (SFA)	SFA 5.1	SFA 5.1 & 5.5	SFA 5.1 & 5.5
AWS No. (Class)	E6010	E7018	E7018
F-No.	3	4	4
A-No.	1	1	1
Size of Filler Metals	1/8"	3/32" or 1/8"	3/32", 1/8" or 5/32"
Weld Metal Thickness Range:			
Groove:	.065" up to .238"	.065" up to .450"	.065" up to .450"
Fillet:	All Thicknesses	All Thicknesses	All Thicknesses
Electrode-Flux (Class)	Covered Electrode	Covered Electrode	Covered Electrode
Flux Trade Name	High Cellulose Sodium	Potassium Iron Powder	Potassium Iron Powder
Consumable Insert	None Used	None Used	None Used
Other			

* Each base metal-filler metal combination should be recorded individually.

WPS No. RPF-5051 Rev. -0-

POSITIONS (QW-405)

Position(s) of Groove: 6G All Position
Welding Progression: Up XX F4 Down XX F3
Position(s) of Fillet: All

POSTWELD HEAT TREATMENT (QW-407)

Temperature Range: None
Time Range:

PREHEAT (QW-406)

Preheat Temp. Min.: 50° F. Min.
Interpass Temp. Max.: 450° F. Max.
Preheat Maintenance:
(Continuous or special heating where applicable should be recorded)

Gas (QW-408)

	Gas(es)	Percent Composition (Mixture)	Flow Rate
Shielding			
Trailing			
Backing			

ELECTRICAL CHARACTERISTICS (QW-409)

Current AC or DC: Direct Current Polarity: Reverse (DCEP)
Amps (Range): 80-150 Volts (Range): 24-32

(Amps and volts range should be recorded for each electrode size, Position, and thickness, etc. This information may be listed in a tabular form similar to that shown below.)

Tungsten Electrode Size and Type: N/A
(Pure Tungsten, 2% Thoriated, etc.)
Mode of Metal Transfer for GMAW: N/A
(Spray arc, short circuiting arc, etc.)
Electrode Wire feed speed range: N/A

TECHNIQUE (QW-410)

String or Weave Bead: String
Orifice or Gas Cup Size: N/A
Initial and Interpass Cleaning (Brushing, Grinding, etc.): Hand or Power Brush, Abrasive Grinding, Hand Chip
Method of Back Gouging: N/A
Oscillation: N/A
Contact Tube to Work Distance: N/A
Multiple or Single Pass (per side): Single
Multiple or Single Electrodes: Single
Travel Speed (Range): 6-16 IPM
Peening: Not Allowed
Other:

Weld Layer(s)	Process	Filler Metal Class	Filler Metal Dia.	Current Type Polar.	Current Amp. Range	Volt Range	Travel Speed Range	Other (e.g., Remarks, Comments, Hot Wire Addition, Technique, Torch Angle, Etc.)
1	SMAW	E6010	1/8"	DCEP	80-100	24-30	6-16 IPM	
2	SMAW	E6010	1/8"	DCEP	80-100	24-30		
3	SMAW	E7018	3/32" Or	DCEP	80-100	24-30	6-16 IPM	
	SMAW	E7018	1/8"	DCEP	90-120	26-32	6-16 IPM	
4-As Required To Complete	SMAW	E7018	1/8 Or	DCEP	90-120	26-32	6-16 IPM	
	SMAW	E7018	5/32	DCEP	110-150	26-32	6-16 IPM	

QW-484 SUGGESTED FORMAT FOR WELDER/WELDING OPERATOR PERFORMANCE QUALIFICATIONS (WPQ)
(See QW-301, Section IX, ASME Boiler and Pressure Vessel Code)

Welder's Name **Michael Rupert** Clock number 2908 Stamp no. MR

Welding process(es) used (SMAW) Shielded Metal Arc Welding Type Manual

Identification of WPS followed by welder during welding of test coupon **RPF-505**

Base Material(s) welded SA-106, Grade B Thickness 0.344"

Manual or Semiautomatic Variables for Each Process (QW-350)	Actual Values	Range Qualified
Backing (metal, weld metal, welded from both sides, flux, etc.) (QW-402)	None Used	With or Without
ASME P-No. P 1 to P 1 To ASME P-No. (QW-403)	P 1 to P 1	P 1 to P 11
< > Plate <X> Pipe (enter diameter, if pipe)	2" Diameter	Pipe 1" and Over
Filler metal specification (SFA): SFA 5.1 & 5.5 Classification (QW-404)	E6010/E7018	
Filler metal F-No.	F3 & F4	F4, F3, F2 & F1
Consumable insert for GTAW or PAW	N/A	N/A
Weld deposit thickness for each welding process	0.344"	Up to .688"
Welding position (1G, 5G, etc.) (QW-405)	6G	All Position
Progression (uphill/downhill)	F-3 Down, F-4 Uphill	F-3 Down, F-4 Uphill
Backing gas for GTAW, PAW, or GMAW; fuel gas for OFW (QW-408)	N/A	N/A
GMAW transfer mode (QW-409)	N/A	N/A
GTAW welding current type/polarity	DCEP	DCEP

Machine Welding Variables for the Process Used (QW-360)	Actual Values	Range Qualified
Direct/remote visual control	N/A	N/A
Automatic voltage control (GTAW)	N/A	N/A
Automatic joint tracking	N/A	N/A
Welding position (1G, 5G, etc.)	N/A	N/A
Consumable insert	N/A	N/A
Backing (metal, weld metal, welded from both sides, flux, etc.)	N/A	N/A

Guided Bend Test Results

Guided Bend Tests Type	< > QW-462 (Side) Results	< X > QW-462.3(a) Trans. R & F Type	< > QW-462.3(b) (Long. R & F) Results
2" Dia.-Root Bend-1		Acceptable	
2" Dia.-Face Bend-1		Acceptable	
2" Dia.-Root Bend-2		Acceptable	
2" Dia.-Face Bend-2		Acceptable	

Visual Examination results (QW-302.4) Visual Examination - Acceptable - per (QW-194)

Radiographic test results (QW-304 and QW-305) Radiographic Examination – Acceptable - per (QW-191)

(For alternative qualification of groove welds by radiography)

Fillet Weld – Fracture test Length and percent of defects In.

Macro test fusion Fillet leg size in. x in. Concavity/convexity In.

Welding test conducted by Ron Rupert- Rupert Pipe Fabrication

Mechanical tests conducted by Klay L. Roberts – Atomic Inspection Labs, Inc Laboratory test no. **AIL-WQ-5533**

We certify that the statements in this record are correct and that the test coupons were prepared, welded, and tested in accordance with the Requirements of Section IX of the ASME Code.

Organization **Rupert Pipe Fabrication**

Date Decenber 6, 2011 By

ATOMIC INSPECTION LABS

24 HOUR SERVICE
CALL 1-505-828-2315

5620 MODESTO N.E. SUITE A
ALBUQUERQUE
NEW MEXICO 87113

WELDING PROCEDURE SPECIFICATION (WPS) YES (X)
PREQUALIFIED Yes QUALIFIED BY TESTING No .
or PROCEDURE QUALIFICATION RECORD (PQR) YES ( )

COMPANY NAME: Rupert Pipe Fabrication
WELDING PROCESS(es): SMAW
SUPPORTING PQR No(s): PREQUALIFIED

IDENTIFICATION RPF-5041
REVISION: -0- DATE: 12/06/11 BY: KLR
TYPE - MANUAL (X) SEMI-AUTOMATIC ( )
MACHINE ( ) AUTOMATIC ( )

JOINT DESIGN USED

TYPE: Groove Welds per AWS D1.1-2010
Para.: 3.11, 3.12 and Figures 3.3 & 3.4
SINGLE (X) DOUBLE WELD ( )
BACKING YES (X) NO ( )
BACKING MATERIAL Metal or Weld Metal
ROOT OPENING: per figs. 3.3 & 3.4 ROOT FACE: per figs. 3.3 & 3.4
GROOVE ANGLE: per figs. 3.3 & 3.4 RADIUS: per figs. 3.3 & 3.4
BACK GOUGING: YES (X) NO ( ) METHOD Air Carbon Arc

BASE METALS

MATERIAL SPEC. AWS Groups I and II, Table 3.1
TYPE OR GRADE: All Grades per Groups I and II
THICKNESS: GROOVE Unlimited
FILLET: N/A PIPE DIA: N/A

FILLER METALS

AWS SPECIFICATION: AWS A5.1 or A5.5
AWS CLASSIFICATION: E7018

SHIELDING

FLUX Covered Electrode GAS: N/A
COMPOSITION: N/A
FLOW RATE: N/A
GAS CUP SIZE: N/A

PREHEAT

PREHEAT TEMPERATURE., MIN: 70 Degrees F.
INTERPASS TEMPERATURE., MIN: 70 Deg. F. MAX 450 Deg. F.

All Position Groove

POSITION: per the limitations of Figures 3.3 & 3.4
POSITION OF GROOVE: All FILLET: N/A
VERTICAL PROGRESSION: UP (X) DOWN ( )

ELECTRICAL CHARACTERISTICS

TRANSFER MODE
GMAW SHORT CIRCUITING ( )
GLOBULAR ( ) SPRAY ( )
CURRENT AC ( ) DCEP (X) DCEN ( )
PULSED ( ) OTHER SMAW - DC Reverse Polarity

TECHNIQUE

STRINGER OR WEAVE BEAD: String or Weave
SINGLE OR MULTI-PASS: Single or Multipass
NUMBER OF ELECTRODES: Single
CONTACT TUBE TO WORK DISTANCE: N/A
PEENING: Not Allowed
INTERPASS CLEANING: Hand Chip, Brush or Grind

POSTWELD HEAT TREATMENT

TEMPERATURE: Not Required
TIME: N/A

WELDING PROCEDURE

		FILLER METALS		CURRENT				JOINT DETAILS
PASS OR WELD LAYER	PROCESS	CLASS	DIAM.	TYPE & POLARITY	AMPS	VOLTS	TRAVEL SPEED	Groove Welds
1	SMAW	E7018	1/8"	DCEP	90-130	20-24	6-16 IPM	See AWS D1.1 Chapter 3 Also See Figures 3.3 & 3.4
2	SMAW	E7018	1/8"	DCEP	90-130	20-24	6-16 IPM	
AS REQUIRED TO COMPLETE	SMAW	E7018	1/8" or 5/32"	DCEP	130-160	20-28	6-16 IPM	

ATOMIC INSPECTION LABS

24 HOUR SERVICE
CALL 1-505-828-2316

5620 MODESTO N.E. SUITE A
ALBUQUERQUE
NEW MEXICO 87113

WELDING PROCEDURE SPECIFICATION (WPS) YES (X)
PREQUALIFIED Yes QUALIFIED BY TESTING No .
or PROCEDURE QUALIFICATION RECORD (PQR) YES ( )

COMPANY NAME: Rupert Pipe Fabrication
WELDING PROCESS(es): SMAW
SUPPORTING PQR No(s): PREQUALIFIED

IDENTIFICATION RPF-5042
REVISION: -0- DATE: 12/05/11 BY: KLR
TYPE - MANUAL (X) SEMI-AUTOMATIC ( )
MACHINE ( ) AUTOMATIC ( )

JOINT DESIGN USED

TYPE: Fillet Welds per AWS D1.1-2010
Para.: 3.9 & 3.9.1 and Figures 2.1 & 2.5
SINGLE (X) DOUBLE WELD ( )
BACKING YES (X) NO ( )
BACKING MATERIAL Metal or Weld Metal
ROOT OPENING: N/A ROOT FACE: N/A
GROOVE ANGLE: N/A RADIUS: N/A
BACK GOUGING: YES () NO (N/A) METHOD: N/A

POSITION: All Position Fillet

POSITION OF GROOVE: N/A FILLET: All Position
VERTICAL PROGRESSION: UP (X) DOWN ( )

ELECTRICAL CHARACTERISTICS

TRANSFER MODE
GMAW SHORT CIRCUITING ( )
GLOBULAR ( ) SPRAY ( )
CURRENT AC ( ) DCEP (X) DCEN ( )
PULSED ( ) OTHER SMAW - DC Reverse Polarity

BASE METALS

MATERIAL SPEC AWS Groups I and II, Table 3.1
TYPE OR GRADE: All Grades per Groups I and II
THICKNESS: GROOVE: N/A
FILLET: Unlimited Thickness PIPE DIA: All Dia. Fillet

TECHNIQUE

STRINGER OR WEAVE BEAD: String or Weave
SINGLE OR MULTI-PASS: Single or Multipass
NUMBER OF ELECTRODES: Single
CONTACT TUBE TO WORK DISTANCE: N/A
PEENING: Not Allowed
INTERPASS CLEANING: Hand Chip, Brush or Grind

FILLER METALS

AWS SPECIFICATION: AWS A5.1 or A5.5
AWS CLASSIFICATION: E7018

SHIELDING

FLUX Covered Electrode GAS: N/A
COMPOSITION: N/A
FLOW RATE: N/A
GAS CUP SIZE: N/A

POSTWELD HEAT TREATMENT

TEMPERATURE: Not Required
TIME: N/A

PREHEAT

PREHEAT TEMPERATURE., MIN: 70 Degrees F.
INTERPASS TEMPERATURE., MIN: 70 Deg. F. MAX 450 Deg. F

WELDING PROCEDURE

		FILLER METALS		CURRENT				JOINT DETAILS
PASS OR WELD LAYER	PROCESS	CLASS	DIAM.	TYPE & POLARITY	AMPS	VOLTS	TRAVEL SPEED	Fillet Welds
1	SMAW	E7018	1/8"	DCEP	90-130	20-24	6-16 IPM	See AWS D1.1 Chapter 3 Also See Figures 2.1 & 2.5
2	SMAW	E7018	1/8"	DCEP	90-130	20-24	6-16 IPM	
AS REQUIRED TO COMPLETE	SMAW	E7018	1/8" or 5/32"	DCEP	130-160	20-28	6-16 IPM	

WELDER, WELDING OPERATOR, OR TACK WELDER QUALIFICATION TEST RECORD

Type of Welder: Manual SMAW Arc Welding ("welder")

Welder's Name: Michael Rupert | Identification number: 2908 | Stamp no.: MR

Welding Procedure Specification Number: RPF-5041 | Revision: -0- | Date:

	Record Actual Values Used In Qualification	Qualification Range
Variables		
Process/Type[Table 4.10, Item (1)]	SMAW	
Electrode (single or Multiple) [Table 4.10, Item (8)]	Single	Single
Current/Polarity	DCEP	
Position [Table 4.10, Item (4)]	3G &4G	All Position
Weld Progression [Table 4.10, Item (6)]	Vertical-up	Vertical-up
Backing (YES or NO) [Table 4.10, Item (7)]	Yes	Yes
Material/Spec.		
Base Metal	ASTM A36	AWS Groups I, II & III
Thickness: (Plate)		
Groove	3/8"	1/8" up to ¾"
Fillet	N/A	All Thicknesses
Thickness: (Pipe/tube)		
Groove	N/A	1/8" up to ¾"
Fillet	N/A	All Thicknesses
Diameter: (Pipe)	N/A	
Groove	N/A	24" and over
Fillet	N/A	All Diameters
Filler Metal [Table 4.10, Item (3)]		
Spec. No.	A5.1 & A5.5	A5.1 & A5.5
Class	E7018	E70XX
F. No. [Table 4.10, Item (2)]	F4	F1, F2, F3 & F4
Gas/Flux Type [Table 4.10, Item (3)]	Covered Electrode	Covered Electrode
Other		

Visual Inspection (4.8.1)

Acceptable YES or NO Yes .

Guided Bend Test Results (4.30.5)

Type	Result	Type	Result
3G	Acceptable	4G	Acceptable

Fillet Test Results (4.30.2.3 and 4.30.4.1)

Appearance: Fillet Size:

Fracture Test Root Penetration: Macroetch:

(Describe the location, nature, and size of any crack or tearing of the specimen)

Inspected by: Klay L. Roberts Level ANST-III | Test Number: AIL-WQ # 5535

Organization: Atomic Inspection Labs, Inc. | Date: December 06, 2011

RADIOGRAPHIC TEST RESULTS (4.30.3.1)

Film Identification Number	Results	Remarks	Film Identification Number	Results	Remarks
3G	Acceptable		4G	Acceptable	

Interpreted by: Klay L. Roberts, ASNT Level III | Test Number: WQ # 5535

Organization: Atomic Inspection Labs, Inc. | Date: December 05, 2011

We, the undersigned, certify that the statements in this record are correct and that the test coupons were prepared, welded, and tested in accordance with the Requirements of section 4 of AWS D1.1 (2010) Structural Welding Code—Steel.

Manufacturer or Contractor: **Rupert Pipe Fabrication** Authorized by:

Date: December 6, 2011

Form E-4

QW-484 SUGGESTED FORMAT FOR WELDER/WELDING OPERATOR PERFORMANCE QUALIFICATIONS (WPQ)
(See QW-301, Section IX, ASME Boiler and Pressure Vessel Code)

Welder's Name **Ellias Gallegos** Clock number 1752 Stamp no. EG

Welding process(es) used (SMAW) Shielded Metal Arc Welding Type Manual

Identification of WPS followed by welder during welding of test coupon **RPF-5051**

Base Material(s) welded SA-106, Grade B Thickness 0.237"

Manual or Semiautomatic Variables for Each Process (QW-350)	Actual Values	Range Qualified
Backing (metal, weld metal, welded from both sides, flux, etc.) (QW-402)	None Used	With or Without
ASME P-No. P 1 to P 1 To ASME P-No. (QW-403)	P 1 to P 1	P 1 to P 11
< > Plate <X> Pipe (enter diameter, if pipe)	2" Diameter	Pipe 1" and Over
Filler metal specification (SFA): SFA 5.1 & 5.5 Classification (QW-404)	E6010/E7018	
Filler metal F-No.	F3 & F4	F4, F3, F2 & F1
Consumable insert for GTAW or PAW	N/A	N/A
Weld deposit thickness for each welding process	0.237"	Up to .474"
Welding position (1G, 5G, etc.) (QW-405)	6G	All Position
Progression (uphill/downhill)	F-3 Down, F-4 Uphill	F-3 Down, F-4 Uphill
Backing gas for GTAW, PAW, or GMAW; fuel gas for OFW (QW-408)	N/A	N/A
GMAW transfer mode (QW-409)	N/A	N/A
GTAW welding current type/polarity	DCEP	DCEP

Machine Welding Variables for the Process Used (QW-360)	Actual Values	Range Qualified
Direct/remote visual control	N/A	N/A
Automatic voltage control (GTAW)	N/A	N/A
Automatic joint tracking	N/A	N/A
Welding position (1G, 5G, etc.)	N/A	N/A
Consumable insert	N/A	N/A
Backing (metal, weld metal, welded from both sides, flux, etc.)	N/A	N/A

Guided Bend Test Results

Guided Bend Tests Type	< > QW-462 (Side) Results	< X > QW-462.3(a) Trans. R & F Type	< > QW-462.3(b) (Long, R & F) Results

Visual Examination results (QW-302.4) Visual Examination - Acceptable - per (QW-194)

Radiographic test results (QW-304 and QW-305) Radiographic Examination – Acceptable - per (QW-191)

(For alternative qualification of groove welds by radiography)

Fillet Weld – Fracture test Length and percent of defects In.

Macro test fusion Fillet leg size in. x in. Concavity/convexity In.

Welding test conducted by Ron Rupert- Rupert Pipe Fabrication

Mechanical tests conducted by Klay L. Roberts – Atomic Inspection Labs, Inc Laboratory test no. **AIL-WQ-5914**

We certify that the statements in this record are correct and that the test coupons were prepared, welded, and tested in accordance with the Requirements of Section IX of the ASME Code.

Organization **Rupert Pipe Fabrication**

Date July 31, 2013 By

WELDER, WELDING OPERATOR, OR TACK WELDER QUALIFICATION TEST RECORD

Type of Welder: Manual SMAW Arc Welding ("welder")

Welder's Name: Ellias Gallegos | Identification number: 1752 | Stamp no.: EG

Welding Procedure Specification Number: **RPF-5051** | Revision: -0- | Date:

	Record Actual Values Used In Qualification	Qualification Range
Variables		
Process/Type[Table 4.10, Item (1)]	SMAW	
Electrode (single or Multiple) [Table 4.10, Item (8)]	Single	Single
Current/Polarity	DCEP	
Position [Table 4.10, Item (4)]	6G	All Position
Weld Progression [Table 4.10, Item (6)]	Vertical-up	Vertical-up
Backing (YES or NO) [Table 4.10, Item (7)]	Yes	Yes
Material/Spec.		
Base Metal	ASTM A36	AWS Groups I, II & III
Thickness: (Plate)		
Groove	.237"	Up to .474"
Fillet	N/A	All Thicknesses
Thickness: (Pipe/tube)		
Groove	N/A	1/8" up to ¾"
Fillet	N/A	All Thicknesses
Diameter: (Pipe)	N/A	
Groove	N/A	24" and over
Fillet	N/A	All Diameters
Filler Metal [Table 4.10, Item (3)]		
Spec. No.	A5.1 & A5.5	A5.1 & A5.5
Class	E6010 / E7018	E60XX / E70XX
F. No. [Table 4.10, Item (2)]	F4	F1, F2, F3 & F4
Gas/Flux Type [Table 4.10, Item (3)]	Covered Electrode	Covered Electrode
Other		

Visual Inspection (4.8.1)

Acceptable YES or NO Yes .

Guided Bend Test Results (4.30.5)

Type	Result	Type	Result
6G	Acceptable	4G	Acceptable

Fillet Test Results (4.30.2.3 and 4.30.4.1)

Appearance: | Fillet Size:

Fracture Test Root Penetration: | Macroetch:

(Describe the location, nature, and size of any crack or tearing of the specimen)

Inspected by: Klay L. Roberts Level ANST-III | Test Number: AIL-WQ # 5535

Organization: Atomic Inspection Labs, Inc. | Date: December 06, 2011

RADIOGRAPHIC TEST RESULTS (4.30.3.1)

Film Identification Number	Results	Remarks	Film Identification Number	Results	Remarks
6G	Acceptable		4G		Acceptable

Interpreted by: Klay L. Roberts, ASNT Level III | Test Number: WQ # 5914

Organization: Atomic Inspection Labs, Inc. | Date: July 31, 2013

We, the undersigned, certify that the statements in this record are correct and that the test coupons were prepared, welded, and tested in accordance with the Requirements of section 4 of AWS D1.1 (2010) Structural Welding Code—Steel.

Manufacturer or Contractor: **Rupert Pipe Fabrication** Authorized by:

Date:

RUPERT

PLUMBING AND HEATING

PIPE FABRICATION

QUALITY ASSURANCE AND NDE SUPPLIER

- Inspection to be per ASME B31.3 341.4.1 Normal Fluid Service

American Welding Society®

Certifies that Welding Inspector

Michael Rupert

has complied with the requirements of AWS QC1,
Standard for AWS Certification of Welding Inspectors

14060841
CERTIFICATE NUMBER

June 1 2017
EXPIRATION DATE

AMERICAN WELDING SOCIETY INCORPORATED 1919 NEW YORK

Dean R Wilson
AWS PRESIDENT

Bill Behnke
AWS QUALIFICATION COMMITTEE CHAIR

George Hilfiker
AWS CERTIFICATION COMMITTEE CHAIR

2.0 SCOPE

The purpose of this section is to describe the inspection capabilities, operating facilities, and equipment owned by **ATOMIC INSPECTION LABS.**

2.1 INSPECTION CAPABILITIES

Atomic Inspection Labs is capable of conducting the following basic forms of inspection and research:

- visual inspection
  AWS-CWI structural steel inspections
  pipeline construction monitoring
  third party inspections and review
  remote visual inspection (RVI)
  digital Video Cam and CDR documentation-“Rail-Cam”

- magnetic particle inspections
  all types

- liquid penetrant inspection
  all types

- radiographic inspections
  lab or portable
  IR-192, CO-60(on arrangement), or x-ray to 300 Kv

- ultrasonic inspection
  on site or lab
  digital thickness gauging with computer download
  computerized “RollaPath” Ultrasonic Dragline Rail Inspection
  digital flaw detectors and A-scan Print Out

- eddy current inspection
  tubing inspection
  aircraft inspections

- ultrasonic research
  piezoelectric or non-contact "EMAT" ultrasonic systems
  remote access ultrasonic detection systems

INSPECTION CAPABILITIES cont.

- welding consultation and training
- welder and weld procedure qualification
- destructive testing
  tensile and compression testing to 100,000 lb capacity
- coatings thickness, bonding, and application tests
- fireproofing thickness tests
- radiation surveys/dosimeter and survey meter calibrations
- hardness, metallurgical, chemical, and mechanical tests
- personnel training
- consultation and report preparation
- strain gage application and monitoring systems
- failure analysis and analytical research
- depositions or court appearances
- micro-focus x-ray inspections/research/systems

2.2 FACILITIES

ATOMIC INSPECTION LABS currently operates a laboratory in Albuquerque, New Mexico, with over 6000 square feet of lab and office space. In addition to laboratory services, we conduct field inspections in all of the major inspection methods at field sites throughout the state of New Mexico and at other sites in the states of Texas, Colorado, Arizona, Utah, and Wyoming. Approximately 70% of our work is conducted at field locations with lab work accounting for the remaining 30%.

2.3 EQUIPMENT

The following is a current list of equipment owned and used by our company. This list will be updated from time to time so that customers can be aware of new capabilities as they are added to our services.

RADIOGRAPHY EQUIPMENT

Isotope Radiography Equipment

2 QSA/AEA/Tech Ops Model 660B 100 Curie IR-192 exposure devices
1 QSA/AEA/Tech Ops Model 880 150 Curie IR-192 exposure device
1 Tech-Ops Model 773 calibration device (cesium)

X-Ray Equipment

Seifert 160 KV 5 MA x-ray machine (portable)
LORAD 160 KV 5MA-CP DIGITAL X-RAY SYSTEM (portable)
Balteau 270 KV 5MA tube (semi-portable)
Balteau 300 KV 5 MA laboratory x-ray machine in shielded lead cabinet
Lead shielded 300 KV Productograph x-ray cabinet

Mobile Equipment

Complete mobile x-ray darkrooms equipped with:
QSA/AEA Technologies 100 Curie IR-192 exposure devices
Self-contained 110 power sources
Film processing tanks
Forced air dryers
High intensity viewers
Densitometers
Safety barricades and warning signs
Radiation survey meters
Assorted film cassettes and hangers

Complete laboratory darkroom equipment for x-ray and photographic processing

Fuji CR Digital Radiography System and Exposure Plates
300 KV Productograph x-ray cabinet
High intensity viewers and light tables
Sakura PDA-85 digital Densitometers
X-Rite Model 301 digital densitometers
Macbeth TD 100 analog densitometers
Density comparison strips calibrated to NBS standard
3x - 10x comparators
Film dryers
Personnel monitoring devices (TLDs, audible dosimeters, and QFEs)
Radiation survey meters and dosimeter chargers
X-ray penetrameter sets (mild steel, stainless, and aluminum)
Agfa and Kodak film inventory
Hewlett Packard 32-S2 exposure calculators

Ultrasonic Equipment

1 ***RollApath*** **Automated Dragline Rail Inspection System**
1 Karl Deutch Model 1025 portable UT machine
1 Magnaflux M-90 Laboratory UT machine
1 Sonic Mark IV portable UT machine
1 Sonic Mark I portable UT machine
1 Krautkramer USK-7D portable UT machine
1 Krautkramer USL-48 portable UT machine
2 Sperry Model UM-715 laboratory ultrasonic machines
2 Balteau UFD-7 portable ultrasonic flaw detectors
1 Balteau Model UFD-2AM portable ultrasonic machines
3 Nortec Model 123 portable thickness testers
1 Stresstel T-Mike portable thickness tester
Balteau Comparagage Model CG1 thickness tester
Hewlett Packard 1746-A 100 MHz oscilloscope
Hewlett Packard Model 1201 storage oscilloscope
Tektronix Model 602 display oscilloscope
Tektronix Model 475 150MHz oscilloscope
Approximately 150 piezoelectric transducers of various models and frequencies
Hewlett Packard Model 650 10 MHz test oscillator
Various power supplies, VOMs, and misc test equip
Various EMAT electromagnets and permanent magnets
Function generator and breadboarding equipment
Burst generators
EMAT transmitter and receiver circuits
Various connection cables, test leads, and couplants

Calibration standards including:
IIW blocks (steel)
Thickness calibration step wedges
ASME calibration blocks
AWS resolution block
D.S.C. angle beam calibration block (steel)
D.A.C "Hitt" blocks (4340 series steel)
Aluminum compressional and shear wave calibration block
Other assorted test blocks (aluminum, stainless steel, Mild steel, copper, and brass)

Penetrant Equipment

Complete laboratory liquid penetrant test line with stainless steel chemical tanks, wash station, parts dryer, developer tanks, and pre- and post-cleaning solvent tanks

Portable visible and fluorescent dye kits
High intensity ultraviolet lights
Penetrant sensitivity test plates
Complete line of visible and fluorescent dye penetrants and cleaning solvents
Miscellaneous liquid penetrant test equipment

Magnetic Particle Equipment

2000 Amp TSI-Portamag AC/DC magnetizing unit and accessories

4 portable 1000 amp Magnaflux mag particle machines and accessories

6 portable Parker Probe electromagnetic yokes

4,500 amp bench Magnaflux unit with 54" head opening, recirculating fluorescent bath, 5-turn coil, and head shot magnetization

Uresco calibrated ampere "shunt" test meters
High intensity ultraviolet lights
Ultraviolet light intensity meters
Field indicators
Magnetic penetrameter
Calibration test ring - Ketos
Complete line of visible and fluorescent mag-particle chemicals and cleaning solvents
Other miscellaneous equipment

Optical and Photographic Equipment

Bausch and Lomb ballphot metallography machine and accessories to 250x
American Optical stereo-zoom microscope 35x expandable to 70x
Minolta XG-9 35mm camera
- microscope adapter
- 45mm lens
- 70 - 200mm zoom lens
- 2x teleconverter
- close up magnifier lenses

Omega 403-705 print enlarger
Portable VCR Video Camera and Tape Recorder
Negative and print processing equipment
Complete photographic darkroom

Eddy Current Equipment

Zetec MIZ-17 Multifrequency Eddy current machine
ED-600 Magnaflux portable eddy current machine and surface probes
Complete line of interchangeable tubing probes and wands
Complete line of tubing inspection calibration standards

Miscellaneous Equipment

Equotip portable hardness tester
Portable Brinell shear pin hardness tester
Telebrineller portable hardness tester and calibrated test bars
Rockwell hardness tester
Coating thickness gages
Metallurgical test equipment
Lincoln Ideal Arc 250 amp welder w/stick, tig, and mig options
Oxy/acetylene cutting/welding equipment
Silver reclaiming equipment
Omega Model 727-F thermocouple thermometer and surface probe (-50oF to 999oF)
Portable generators
Inspection stamps
Large collection of codes from categories listed below
- AISC
- ANSI
- API
- ASME
- ASNT
- ASTM including E-155 reference radiographs for inspection of aluminum and magnesium castings
- AWS
- AWWA
- FAA
- In-house specs (Sandia, TRW, GE, Sperry, etc.)
- MIL specs
- USAC and others

2.4 MATERIALS AND EQUIPMENT CERTIFICATIONS

Original certifications for materials compliance to and equipment calibration documents are contained in our main laboratory Q-C Manual. Holders of controlled copies of our Q-C Manual may request copies of these document and also request updates of these documents as they wish. These documents are not included as part of distributed manuals due to their length and their availability at our lab facility.

TRANSMITTAL DOCUMENT

Date:	**10-5-16**	**From:**	**Ed Butler**
To:	**EA Engineering, Science, and Technology, Inc., 320 Gold Ave. SW, Suite 1300 Albuquerque, NM 87102 Devon Jercinovic**	**Job Name:**	**Kirtland AFB, NM Bulk Fuels Facility**
		Reference:	
		Transmittal Method:	**E-mail**
		Sent By:	**Ed Butler**

Submittal	Specification Section	Item Description
5 Rev 1	05 50 13	Miscellaneous Metal Fabrications (Pipe Supports)

Ed Butler
TECHSAS, Inc.
4819 West Bayshore Drive
Bacliff, TX 77518

"I hereby certify that the (equipment) (material) (article) shown and marked in this submittal is that proposed to be incorporated with the Contract, is in compliance with the contract drawings and specification, can be installed in the allocated spaces, and is submitted for Contractor approval.

Certified by _____.
(Signature when applicable) Date: _____.

Kirtland Air Force Base
Albuquerque, New Mexico

Project: Bulk Fuels Facility

Pipe Supports (Submittal 5 Rev. 1)

Owner:	**Kirtland Air Force Base** **US Army Corps of Engineers**
Owner's Agent:	**EA Engineering, Science, and Technology, Inc.,** **320 Gold Ave. SW, Suite 1300** **Albuquerque, NM 87102**
Engineer:	**EA Engineering, Science, and Technology, Inc.,** **320 Gold Ave. SW, Suite 1300** **Albuquerque, NM 87102**
General Contractor:	**TECHSAS, Inc.** **4819 West Bayshore Drive** **Bacliff, TX 77518**
Construction Management:	**Tasman Geosciences** **6899 Pecos Street** **Unit C** **Denver, CO 80221**

TABLE OF CONTENTS

Description:

- **Pipe Supports Figure 001-B**
- **Pipe Supports Figure 002-B**

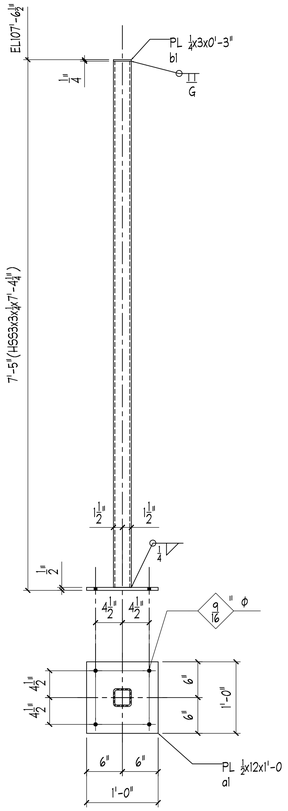

ONE - COLUMN- A1
(REF. SHT. CS-03-400010)
ONE @ PIPE SUPPORT DETAIL PS-5B

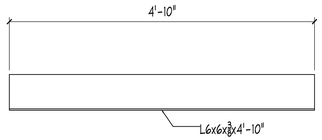

ONE - ANGLES - B1
(REF. SHT. CS-03-400010)
ONE @ PIPE SUPPORT DETAIL PS-5B

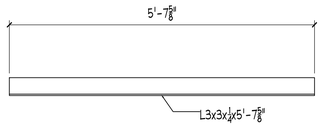

4 - ANGLES - C1
(REF. SHT. CS-03-400010)
4 @ PIPE SUPPORT DETAIL PS-4C

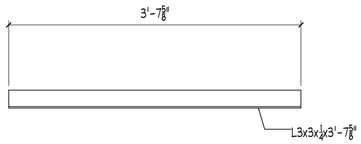

4 - ANGLES - D1
(REF. SHT. CS-03-400010)
4 @ PIPE SUPPORT DETAIL PS-4D

BILL OF MATERIAL

PIECE MARK	TEMPLATE MARK	QUANTITY	ITEM	LENGTH FEET	LENGTH INCHES	REMARKS	WEIGHT
A1		ONE	HSS3x3x1/4	7	4 1/4		
	a1	ONE	PL 1/2x12	1	0		
	b1	ONE	PL 1/4x3	0	3		
B1		ONE	L6x6x3/8	4	10		
C1		4	L3x3x1/4	5	7 5/8		
D1		2	L3x3x1/4	3	7 5/8		
FIELD BOLTS							
		4	1/2"ϕ HILTI "TZ"	0	7	3 1/2" EMBED	
			EXPANSION ANCHORS			DBL. NUT & WASHER	

GENERAL NOTES:
1. ALL WF SHAPES ASTM A992 GR. 50
2. ALL PLATES AND ANGLES ASTM A36 – CURR.
3. ALL TUBE ASTM A500 GR. B U.N.O.
4. ALL PIPE ASTM A53 BR. B U.N.O.
5. SURFACE PREP PRIOR TO PAINTING SSPC – SP2
6. ONE SHOP COAT RED OXIDE PRIMER
7. MILL TEST REPORTS REQUIRED
8. WELDERS CERTIFICATION REQUIRED
9. WELDS LH–7018 (LH–73) ELECTRODE AWS A5.1 OR E71T–1 045 WIRE AWS A5.20
10. TACKS LH–7018 (LH–73) ELECTRODE AWS A5.1
11. ALL SHOP BOLTS PER P.I.W. BOLTING PROCEDURE
12. NO BACK CHARGES WILL BE ACCEPTED UNLESS AUTHORIZED BY PACE IRON WORKS, INC.
13. ⇝ THUS DENOTES DIRRECTION OF SLOTTED HOLES

HOLES: - U.N.O. | SLOTS: - U.N.O. | REF: -

				C
				B
				A
DET.:	DATE:	CHK.:	DATE:	

REVISIONS

PRINT RECORD

NO:	USE:	DATE:	NO:	USE:	DATE:
	APPROVAL			FIELD USE	
				PURCHASING	
	SHOP			FINAL	
	QUALITY CONTROL			CHK	
	CUT LIST			TEMP	

PACE METALS NORTH LLC

DESCRIPTION: PIPE SUPPORT
PROJECT: KIRTLAND AFB, BULK FUELS FACILITY
LOCATION: ALBUQUERQUE, NM
CUSTOMER: MSR INC.
ARCHITECT: -
PROJECT MANAGER: -
DETAILED BY: DL DATE: 9/28/2016
CHECKED BY: - DATE: -
JOB NUMBER: 16-073
SHEET NUMBER: ONE

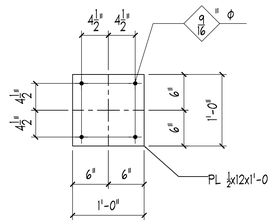

15 - PLATES - A2
(REF. SHT. CS-03-400009)
2 @ PIPE SUPPORT DETAIL PS-1B
6 @ PIPE SUPPORT DETAIL PS-2B
6 @ PIPE SUPPORT DETAIL PS-6B
ONE @ PIPE SUPPORT DETAIL PS-8B

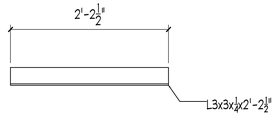

ONE - ANGLES - B2
(REF. SHT. CS-03-400009)
ONE @ PIPE SUPPORT DETAIL PS-1B

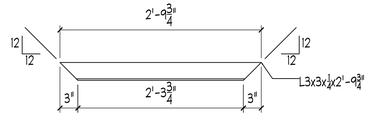

ONE - ANGLES - C2
(REF. SHT. CS-03-400009)
ONE @ PIPE SUPPORT DETAIL PS-1B

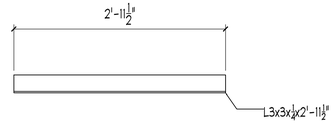

3 - ANGLES - D2
(REF. SHT. CS-03-400009)
3 @ PIPE SUPPORT DETAIL PS-2B

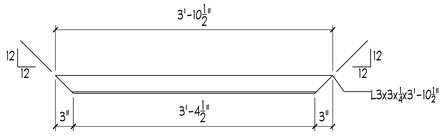

3 - ANGLES - E2
(REF. SHT. CS-03-400009)
3 @ PIPE SUPPORT DETAIL PS-2B

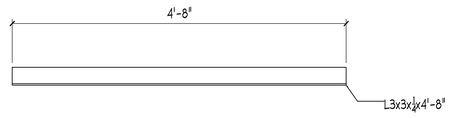

6 - ANGLES - F2
(REF. SHT. CS-03-400009)
2 @ PIPE SUPPORT DETAIL PS-3C
2 @ PIPE SUPPORT DETAIL PS-4C
2 @ PIPE SUPPORT DETAIL PS-4D

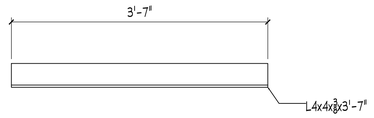

2 - ANGLES - G2
(REF. SHT. CS-03-400009)
2 @ PIPE SUPPORT DETAIL PS-3C

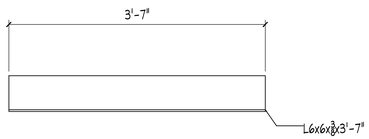

4 - ANGLES - H2
(REF. SHT. CS-03-400010)
2 @ PIPE SUPPORT DETAIL PS-4C
2 @ PIPE SUPPORT DETAIL PS-4D

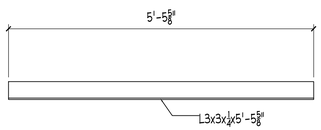

4 - ANGLES - J2
(REF. SHT. CS-03-400009)
4 @ PIPE SUPPORT DETAIL PS-3C

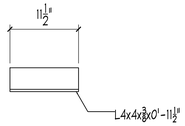

6 - ANGLES - P2
(REF. SHT. CS-03-400010)
6 @ PIPE SUPPORT DETAIL PS-6B

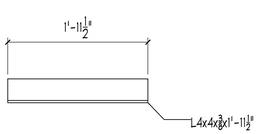

ONE - ANGLES - T2
(REF. SHT. CS-03-400011)
ONE @ PIPE SUPPORT DETAIL PS-8B

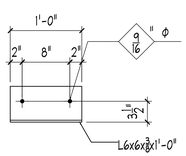

ONE - ANGLES - V2
(REF. SHT. CS-03-400011)
ONE @ PIPE SUPPORT DETAIL PS-7B

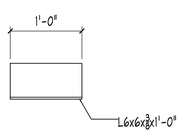

ONE - ANGLES - W2
(REF. SHT. CS-03-400011)
ONE @ PIPE SUPPORT DETAIL PS-7B

BILL OF MATERIAL

PIECE MARK	TEMPLATE MARK	QUANTITY	ITEM	LENGTH FEET	LENGTH INCHES	REMARKS	WEIGHT
A2		15	PL1/2x12	1	0		
B2		ONE	L3x3x1/4	2	2 1/2		
C2		ONE	L3x3x1/4	2	9 3/4		
D2		3	L3x3x1/4	2	11 1/2		
E2		ONE	L3x3x1/4	2	9 3/4		
F2		6	L3x3x1/4	4	8		
G2		2	L4x4x3/8	3	7		
H2		2	L6x6x3/8	3	7		
J2		4	L3x3x1/4	5	5 5/8		
P2		6	L4x4x3/8	0	11 1/2		
T2		ONE	L4x4x3/8	1	11 1/2		
V2		ONE	L6x6x3/8	1	0		
W2		ONE	L6x6x3/8	1	0		

FIELD BOLTS

		60	1/2"ϕ HILTI HLC SLEEVE ANCHOR	0	3	1 1/2" EMBED	
		2	1/2"ϕ HILTI "TZ"	0	4 1/2	2" EMBED	
			EXPANSION ANCHORS				

GENERAL NOTES:
1. ALL WF SHAPES ASTM A992 GR. 50
2. ALL PLATES AND ANGLES ASTM A36 – CURR.
3. ALL TUBE ASTM A500 GR. B U.N.O.
4. ALL PIPE ASTM A53 BR. B U.N.O.
5. SURFACE PREP PRIOR TO PAINTING SSPC – SP2
6. ONE SHOP COAT RED OXIDE PRIMER
7. MILL TEST REPORTS REQUIRED
8. WELDERS CERTIFICATION REQUIRED
9. WELDS LH-7018 (LH-73) ELECTRODE AWS A5.1 OR E71T-1 045 WIRE AWS A5.20
10. TACKS LH-7018 (LH-73) ELECTRODE AWS A5.1
11. ALL SHOP BOLTS PER P.I.W. BOLTING PROCEDURE
12. NO BACK CHARGES WILL BE ACCEPTED UNLESS AUTHORIZED BY PACE IRON WORKS, INC.
13. ⇝ THUS DENOTES DIRRECTION OF SLOTTED HOLES

HOLES: - U.N.O. | SLOTS: - U.N.O. | REF: -

DET.:	DATE:	CHK.:	DATE:

REVISIONS
C
B
A

PRINT RECORD

NO:	USE:	DATE:	NO:	USE:	DATE:
	APPROVAL			FIELD USE	
				PURCHASING	
	SHOP			FINAL	
	QUALITY CONTROL			CHK	
	CUT LIST			TEMP	

PACE METALS NORTH LLC

DESCRIPTION: PIPE SUPPORT
PROJECT: KIRTLAND AFB, BULK FUELS FACILITY
LOCATION: ALBUQUERQUE, NM
CUSTOMER: MSR INC.
ARCHITECT: -
PROJECT MANAGER: -
DETAILED BY: DL DATE: 9/28/2016
CHECKED BY: - DATE: -
JOB NUMBER: 16-073
SHEET NUMBER: 2

TRANSMITTAL DOCUMENT

Date:	**9-9-16**	**From:**	**Ed Butler**
To:	**EA Engineering, Science, and Technology, Inc., 320 Gold Ave. SW, Suite 1300 Albuquerque, NM 87102 Devon Jercinovic**	**Job Name:**	**Kirtland AFB, NM Bulk Fuels Facility**
		Reference:	
		Transmittal Method:	**E-mail**
		Sent By:	**Ed Butler**

Submittal	Specification Section	Item Description
6	50 05 13 2.1	Pipe Fabrication

Ed Butler
TECHSAS, Inc.
4819 West Bayshore Drive
Bacliff, TX 77518

"I hereby certify that the (equipment) (material) (article) shown and marked in this submittal is that proposed to be incorporated with the Contract, is in compliance with the contract drawings and specification, can be installed in the allocated spaces, and is submitted for Contractor approval.

Certified by _____.
(Signature when applicable) Date: _____.

Kirtland Air Force Base
Albuquerque, New Mexico

Project: Bulk Fuels Facility

Pipe Fabrication (Submittal 6)

Owner:	**Kirtland Air Force Base** **US Army Corps of Engineers**
Owner's Agent:	**EA Engineering, Science, and Technology, Inc.,** **320 Gold Ave. SW, Suite 1300** **Albuquerque, NM 87102**
Engineer:	**EA Engineering, Science, and Technology, Inc.,** **320 Gold Ave. SW, Suite 1300** **Albuquerque, NM 87102**
General Contractor:	**TECHSAS, Inc.** **4819 West Bayshore Drive** **Bacliff, TX 77518**
Construction Management:	**Tasman Geosciences** **6899 Pecos Street** **Unit C** **Denver, CO 80221**

TABLE OF CONTENTS

Description:

- **Pipe Fabrication – Rupert Plumbing and Heating**

RUPERT

PLUMBING AND HEATING

PIPE FABRICATION

Section 40 05 13 2.1

MATERIALS SUBMITTAL

- WELD FITTINGS
- WELD FLANGES
- A106 SEAMLESS PIPE
- COMBINATION AIR VENT VALVES
- BUTTERFLY VALVES
- BALL VALVES
- TANK VENTS
- WYE STRAINERS

RUPERT

PLUMBING AND HEATING

PIPE FABRICATION

WELD FITTINGS, FLANGES, AND PIPE

WELDBEND®

Even with all the advances in technology today, the wholly welded piping system has for decades remained the best choice for use in high pressure and high temperature application. Many piping jobs in schools, industrial plants, refineries and factories have benefited from the inherent advantages of a completely welded system. It becomes a closed container joining pipes, valves, fittings, and flanges. A welded joint actually becomes part of the pipe, minimizing leak potential. This provides greater margins of safety, especially under conditions of high internal pressures. Additionally, welding fittings form a continuous metal structure with the pipe, adding forged-in strength to any piping system. Furthermore, smooth forged fittings simplify insulation and take up less space.

ASTM A 234

Scope

This standard covers wrought carbon steel fittings of seamless and welded construction which are manufactured to the dimensional specifications of ASME B16.9 and B16.28. These fittings are primarily for use in pressure piping and in pressure vessel fabrication for service at moderate and elevated temperatures.

Materials

The starting material for fittings shall consist of killed steel, forgings, bars, plates, seamless or fusion-welded tubular products with filler metal added and shall conform to the the chemical requirements of ASTM A 234. Unless otherwise specified, carbon steel plates may be either coarse grain or fine grain practice.

Manufacture

Forging or shaping operations are performed by hammering, pressing, piercing, extruding, upsetting, rolling, bending, machining, or by a combination of two or more of these operations. The forming process shall be applied so that it will not produce injurious imperfections in the fittings.

Heat Treatment

Hot-formed WPB fittings, upon which the final forming operation is completed at a temperature above 1150°F and below 1800°F, need not be heat treated. Cold-Formed WPB fittings, upon which the final forming operation is completed at a temperature below 1150°F, shall be normalized, or shall be stress relieved at 1100°F to 1275°F.

Fitting Summary Data Sheet

Chemical requirements (in %):

Carbon	Manganese	Phosphorus (max)	Sulfur (max)
.30 max	.29-1.06	.050	.058

Silicon	Chromium	Molybdenum	Nickel	Copper
.10 min	.40 max	.15 max	.40 max	.40 max

Vanadium	Columbium
.08 max	.02 max

Mechanical requirements:

Tensile Strength		60,000-85,000 psi
Yield Strength (min)		35,000 psi
Elongation	- Longitudinal:	22%
	- Transverse:	14%

Dimensions

Butt-welding fittings and butt-welding short radius elbows and returns purchased in accordance with this specification shall conform to the dimensions and tolerances given in the latest revision of ANSI B16.9 and B16.28, respectively.

Certification

When requested by the purchaser, the manufacturer shall provide a certificate of compliance to this specification. If requested to provide test reports, the manufacturer shall also provide the following where applicable:

* Chemical analysis results. When the amount of an element is less than .02%, the analysis for that element is reported as "<0.02%."
* Tensile property results, report the yield strength and ultimate strength in ksi [or MPa] and elongation in percent,
* Hardness acceptable in accordance with Section 10 of ASTM A-234,
* Seamless or Welded,
* Type of Heat Treatment, if any,
* Starting material, specifically pipe, plate, etc.,
* Statement regarding radiographic or ultrasonic examination.
* Any supplemental testing required by the purchase order.

Product Marking

All fittings shall have the prescribed information stamped or otherwise suitable marked on each fitting in accordance with ASTM A 234/MSS SP-25. A Weldbend fitting is marked as follows: Weldbend's Name, Nominal Pipe Size, Pipe Wall Thickness Designation, Material Grade (WPB/WPC) and Heat Identification Number.

Note: All information contained in this document, and for a complete description of all requirements, refer to ASTM A 105. Sheets are subject to change without notice.

WELDBEND

Even with all the advances in technology today, the wholly welded piping system has for decades remained the best choice for use in high pressure and high temperature application. Many piping jobs in schools, industrial plants, refineries, and factories have benefited from the inherent advantages of a completely welded system. It becomes a closed container joining pipes, valves, fittings, and flanges. A welded joint actually becomes part of the pipe, minimizing leak potential. This provides greater margins of safety, especially under conditions of high internal pressures. Additionally, welding fittings form a continuous metal structure with the pipe, adding forged-in strength to any piping system. Furthermore, smooth forged flanges simplify insulation and take up less space.

ASTM A 105

Scope

This standard covers forged carbon steel piping components for ambient- and higher-temperature service in pressure systems. Flanges are ordered either to dimensions specified by the purchaser or to dimensional specifications such as ASME 16.5 and API 6A. Forgings made to ASTM A 105 are normally limited to a maximum weight of 10,000 lb.

Materials

Weldbend flanges are made by hammering, pressing, rolling and/or machining cast or forged bars, billets or slabs. These adhere to the extent described in the following sections.

Manufacture

ASTM A 105 covers the requirements for forged steel components as finished products only.
The requirements for raw materials are covered by the standards specified in Section 2: Referenced Documents of ASTM A 105.

Heat Treatment

Heat treatment is not a mandatory requirement of this specification except for the following piping components:
* Flanges above Class 300,
* Flanges of special design where the design pressure at the design temperature exceeds the pressure-temperature ratings of Class 300, Group 1.1,
* Flanges of special design where the design pressure or design temperature is not known.

Heat treatment, when required by the above, shall be annealing, normalizing, normalizing and tempering, or quenching and tempering in accordance with ASTM A 961.

Flange Summary Data Sheet

Chemical requirements (in %):

Carbon	Manganese	Phosphorus (max)	Sulfur (max)
.35 max	.60-1.05	.035	.040

Silicon	Copper	Nickel	Chromium
.10-.35	.40 max	.40 max	.30 max

Molybdenum	Vanadium	Columbium
.12 max	.08 max	.02 max

Mechanical requirements:

Tensile Strength (min)	70,000 psi
Yield Strength (min)	36,000 psi
Basic minimum elongation for walls 5/16 in. and over in thickness, strip tests.	30%
Reduction of area (min)	30%
Hardness, HB (max)	187

Dimensions

Weldbend flanges are manufactured in accordance with ASME B 16.5 (24" NPS and smaller) and ASME B 16.47 (26" - 60" NPS).

Certification

For forgings made to specified dimensions agreed upon by the purchaser, and for forgings made to dimensional standards, the application of identification marks, as required by ASTM A 961, shall be the certification that the forgings have been furnished in accordance with the requirements of this standard. The specification designation included on test reports shall include the year of issue and revision letter, if any.
Test Reports: When test reports are required, Weldbend will also provide the following, if applicable:
*Type of heat treatment,
*Tensile property results, i.e., yield strength and ultimate strength in ksi, elongation and reduction in area, in percent,
*Chemical analysis results,
*Hardness results, and,
*Any supplementary testing required by the purchase order.

Product Marking

All flanges shall have the prescribed information stamped or otherwise suitable marked on each flange in accordance with the Standard/MSS SP-25. A Weldbend flange is marked as follows:
Weldbend's Name, Nominal Pipe Size, A105/SA105, Bore Designation, Heat Identification Number and manufacture date.

Note: All information contained in this document, and for a complete description of all requirements, refer to ASTM A 105. Sheets are subject to change without notice.

Designation: A 106/A 106M – 04b

Used in USDOE-NE standards

Standard Specification for Seamless Carbon Steel Pipe for High-Temperature Service[1]

This standard is issued under the fixed designation A 106/A 106M; the number immediately following the designation indicates the year of original adoption or, in the case of revision, the year of last revision. A number in parentheses indicates the year of last reapproval. A superscript epsilon (ε) indicates an editorial change since the last revision or reapproval.

This standard has been approved for use by agencies of the Department of Defense.

1. Scope*

1.1 This specification[2] covers seamless carbon steel pipe for high-temperature service (Note 1) in NPS ⅛ to NPS 48 [DN 6 to DN 1200] (Note 2) inclusive, with nominal (average) wall thickness as given in ASME B 36.10M. It shall be permissible to furnish pipe having other dimensions provided such pipe complies with all other requirements of this specification. Pipe ordered under this specification shall be suitable for bending, flanging, and similar forming operations, and for welding. When the steel is to be welded, it is presupposed that a welding procedure suitable to the grade of steel and intended use or service will be utilized.

NOTE 1—It is suggested, consideration be given to possible graphitization.

NOTE 2—The dimensionless designator NPS (nominal pipe size) [DN (diameter nominal)] has been substituted in this standard for such traditional terms as "nominal diameter," "size," and "nominal size."

1.2 Supplementary requirements of an optional nature are provided for seamless pipe intended for use in applications where a superior grade of pipe is required. These supplementary requirements call for additional tests to be made and when desired shall be so stated in the order.

1.3 The values stated in either SI units or inch-pound units are to be regarded separately as standard. The values stated in each system may not be exact equivalents. Therefore, each system is to be used independently of the other.

1.4 The following precautionary caveat pertains only to the test method portion, Sections 11, 12, 13, 14, and 15, of this specification: *This standard does not purport to address all of the safety concerns, if any, associated with its use. It is the responsibility of the user of this standard to establish appropriate safety and health practices and determine the applicability of regulatory limitations prior to use.*

2. Referenced Documents

2.1 *ASTM Standards:* [3]

A 530/A 530M Specification for General Requirements for Specialized Carbon and Alloy Steel Pipe

E 213 Practice for Ultrasonic Examination of Metal Pipe and Tubing

E 309 Practice for Eddy-Current Examination of Steel Tubular Products Using Magnetic Saturation

E 381 Method of Macroetch Testing Steel Bars, Billets, Blooms, and Forgings

E 570 Practice for Flux Leakage Examination of Ferromagnetic Steel Tubular Products

2.2 *ASME Standard:*

ASME B 36.10M Welded and Seamless Wrought Steel Pipe[4]

2.3 *Military Standards:*

MIL-STD-129 Marking for Shipment and Storage[5]

MIL-STD-163 Steel Mill Products, Preparation for Shipment and Storage[5]

2.4 *Federal Standard:*

Fed. Std. No. 123 Marking for Shipments (Civil Agencies)[5]

Fed. Std. No. 183 Continuous Identification Marking of Iron and Steel Products[5]

2.5 *Other Standards:*

SSPC-SP 6 Surface Preparation Specification No. 6[6]

3. Ordering Information

3.1 The inclusion of the following, as required will describe the desired material adequately, when ordered under this specification:

3.1.1 Quantity (feet, metres, or number of lengths),

[1] This specification is under the jurisdiction of Committee A01 on Steel, Stainless Steel and Related Alloys and is the direct responsibility of Subcommittee A01.09 on Carbon Steel Tubular Products.

Current edition approved Oct. 1, 2004. Published October 2004. Originally approved in 1926. Last previous edition in 2004 as A 106/A 106M – 04a.

[2] For ASME Boiler and Pressure Vessel Code applications see related Specifications SA-106 in Section II of that Code.

[3] For referenced ASTM standards, visit the ASTM website, www.astm.org, or contact ASTM Customer Service at service@astm.org. For *Annual Book of ASTM Standards* volume information, refer to the standard's Document Summary page on the ASTM website.

[4] Available from American Society of Mechanical Engineers (ASME), ASME International Headquarters, Three Park Ave., New York, NY 10016-5990.

[5] Available from Standardization Documents Order Desk, DODSSP, Bldg. 4, Section D, 700 Robbins Ave., Philadelphia, PA 19111-5098.

[6] Available from Steel Structures Painting Council (SSPC), 40 24th St., 6th Floor, Pittsburgh, PA 15222-4656.

***A Summary of Changes section appears at the end of this standard.**

Copyright © ASTM International, 100 Barr Harbor Drive, PO Box C700, West Conshohocken, PA 19428-2959, United States.

3.1.2 Name of material (seamless carbon steel pipe),
3.1.3 Grade (Table 1),
3.1.4 Manufacture (hot-finished or cold-drawn),
3.1.5 Size (NPS [DN] and weight class or schedule number, or both; outside diameter and nominal wall thickness; or inside diameter and nominal wall thickness),
3.1.6 Special outside diameter tolerance pipe (16.2.2),
3.1.7 Inside diameter tolerance pipe, over 10 in. [250 mm] ID (16.2.3),
3.1.8 Length (specific or random, Section 20),
3.1.9 Optional requirements (Section 9 and S1 to S8),
3.1.10 Test report required (Section on Certification of Specification A 530/A 530M),
3.1.11 Specification designation (A 106 or A 106M, including year-date),
3.1.12 End use of material,
3.1.13 Hydrostatic test in accordance with Specification A 530/A 530M or 13.3 of this specification, or NDE in accordance with Section 14 of this specification.
3.1.14 Special requirements.

4. Process

4.1 The steel shall be killed steel, with the primary melting process being open-hearth, basic-oxygen, or electric-furnace, possibly combined with separate degassing or refining. If secondary melting, using electroslag remelting or vacuum-arc remelting is subsequently employed, the heat shall be defined as all of the ingots remelted from a single primary heat.

4.2 Steel cast in ingots or strand cast is permissible. When steels of different grades are sequentially strand cast, identification of the resultant transition material is required. The producer shall remove the transition material by any established procedure that positively separates the grades.

4.3 For pipe NPS 1½ [DN 40] and under, it shall be permissible to furnish hot finished or cold drawn.

4.4 Unless otherwise specified, pipe NPS 2 [DN 50] and over shall be furnished hot finished. When agreed upon between the manufacturer and the purchaser, it is permissible to furnish cold-drawn pipe.

5. Heat Treatment

5.1 Hot-finished pipe need not be heat treated. Cold-drawn pipe shall be heat treated after the final cold draw pass at a temperature of 1200 °F (650 °C) or higher.

TABLE 1 Chemical Requirements

	Composition, %		
	Grade A	Grade B	Grade C
Carbon, max[A]	0.25	0.30	0.35
Manganese	0.27–0.93	0.29–1.06	0.29–1.06
Phosphorus, max	0.035	0.035	0.035
Sulfur, max	0.035	0.035	0.035
Silicon, min	0.10	0.10	0.10
Chrome, max[B]	0.40	0.40	0.40
Copper, max[B]	0.40	0.40	0.40
Molybdenum, max[B]	0.15	0.15	0.15
Nickel, max[B]	0.40	0.40	0.40
Vanadium, max[B]	0.08	0.08	0.08

[A] For each reduction of 0.01 % below the specified carbon maximum, an increase of 0.06 % manganese above the specified maximum will be permitted up to a maximum of 1.35 %.
[B] These five elements combined shall not exceed 1 %.

6. General Requirements

6.1 Material furnished to this specification shall conform to the applicable requirements of the current edition of Specification A 530/A 530M unless otherwise provided herein.

7. Chemical Composition

7.1 The steel shall conform to the requirements as to chemical composition prescribed in Table 1.

8. Heat Analysis

8.1 An analysis of each heat of steel shall be made by the steel manufacturer to determine the percentages of the elements specified in Section 7. If the secondary melting processes of 5.1 are employed, the heat analysis shall be obtained from one remelted ingot or the product of one remelted ingot of each primary melt. The chemical composition thus determined, or that determined from a product analysis made by the manufacturer, if the latter has not manufactured the steel, shall be reported to the purchaser or the purchaser's representative, and shall conform to the requirements specified in Section 7.

9. Product Analysis

9.1 At the request of the purchaser, analyses of two pipes from each lot (Note 3) of 400 lengths or fraction thereof, of each size up to, but not including, NPS 6 [DN 150], and from each lot of 200 lengths or fraction thereof of each size NPS 6 [DN 150] and over, shall be made by the manufacturer from the finished pipe. The results of these analyses shall be reported to the purchaser or the purchaser's representative and shall conform to the requirements specified in Section 7.

9.2 If the analysis of one of the tests specified in 9.1 does not conform to the requirements specified in Section 7, analyses shall be made on additional pipes of double the original number from the same lot, each of which shall conform to requirements specified.

NOTE 3—A lot shall consist of the number of lengths specified in Sections 9 and 21 of the same size and wall thickness from any one heat of steel.

10. Tensile Requirements

10.1 The material shall conform to the requirements as to tensile properties given in Table 2.

11. Bending Requirements

11.1 For pipe NPS 2 [DN 50] and under, a sufficient length of pipe shall stand being bent cold through 90° around a cylindrical mandrel, the diameter of which is twelve times the outside diameter (as shown in ASME B 36.10M) of the pipe, without developing cracks. When ordered for close coiling, the pipe shall stand being bent cold through 180° around a cylindrical mandrel, the diameter of which is eight times the outside diameter (as shown in ASME B 36.10M) of the pipe, without failure.

11.2 Subject to the approval of the purchaser, for pipe whose diameter exceeds 10 in. [250 mm], it shall be permissible for the bend test to be substituted for the flattening test described in Section 12. The bend test specimens shall be bent at room temperature through 180° with the inside diameter of

TABLE 2 Tensile Requirements

	Grade A		Grade B		Grade C	
Tensile strength, min, psi [MPa]	48 000 [330]		60 000 [415]		70 000 [485]	
Yield strength, min, psi [MPa]	30 000 [205]		35 000 [240]		40 000 [275]	
	Longitudinal	Transverse	Longitudinal	Transverse	Longitudinal	Transverse
Elongation in 2 in. [50 mm], min, %:						
Basic minimum elongation transverse strip tests, and for all small sizes tested in full section	35	25	30	16.5	30	16.5
When standard round 2-in. [50-mm] gage length test specimen is used	28	20	22	12	20	12
For longitudinal strip tests	[A]		[A]		[A]	
For transverse strip tests, a deduction for each 1/32-in. [0.8-mm] decrease in wall thickness below 5/16 in. [7.9 mm] from the basic minimum elongation of the following percentage shall be made		1.25		1.00		1.00

[A] The minimum elongation in 2 in. [50 mm] shall be determined by the following equation:

$$e = 625\ 000A^{0.2} / U^{0.9}$$

for SI units, and

$$e = 1\ 940A^{0.2} / U^{0.9}$$

for inch-pound units,

where:

e = minimum elongation in 2 in. [50 mm], %, rounded to the nearest 0.5 %,

A = cross-sectional area of the tension test specimen, in.^{2} [mm^2], based upon specified outside diameter or nominal specimen width and specified wall thickness, rounded to the nearest 0.01 in.^{2} [1 mm^2]. (If the area thus calculated is equal to or greater than 0.75 in.^{2} [500 mm^2], then the value 0.75 in.^{2} [500 mm^2] shall be used.), and

U = specified tensile strength, psi [MPa].

the bend being 1 in. [25 mm], without cracking on the outside portion of the bent portion.

11.3 For pipe whose diameter exceeds 25 in. [635 mm] and whose diameter to wall thickness ratio is 7.0 or less, the bend test described in 11.2 shall be conducted instead of the flattening test.

NOTE 4—Diameter to wall thickness ratio = specified outside diameter/nominal wall thickness.

Example: For 28 in. [711 mm] diameter 5.000 in. [127 mm] thick pipe the diameter to wall thickness ratio = 28/5 = 5.6 [711/127 = 5.6].

12. Flattening Tests

12.1 Except as allowed by 11.2, for pipe over NPS 2 [DN 50], a section of pipe not less than 2½ in. [63.5 mm] in length shall be flattened cold between parallel plates until the opposite walls of the pipe meet. Flattening tests shall be in accordance with Specification A 530/A 530M, except that in the formula used to calculate the "H" value, the following "e" constants shall be used:

0.08 for Grade A
0.07 for Grades B and C

12.2 When low D-to-t ratio tubulars are tested, because the strain imposed due to geometry is unreasonably high on the inside surface at the six and twelve o'clock locations, cracks at these locations shall not be cause for rejection if the D-to-t ratio is less than ten.

13. Hydrostatic Test

13.1 Except as allowed by 13.2, 13.3, and 13.4, each length of pipe shall be subjected to the hydrostatic test without leakage through the pipe wall.

13.2 As an alternative to the hydrostatic test at the option of the manufacturer or where specified in the purchase order, it shall be permissible for the full body of each pipe to be tested with a nondestructive electric test described in Section 14.

13.3 Where specified in the purchase order, it shall be permissible for pipe to be furnished without the hydrostatic test and without the nondestructive electric test in Section 14; in this case, each length so furnished shall include the mandatory marking of the letters "NH." It shall be permissible for pipe meeting the requirements of 13.1 or 13.2 to be furnished where pipe without either the hydrostatic or nondestructive electric test has been specified in the purchase order; in this case, such pipe need not be marked with the letters "NH." Pipe that has failed either the hydrostatic test of 13.1 or the nondestructive electric test of 13.2 shall not be furnished as "NH" pipe.

13.4 Where the hydrostatic test and the nondestructive electric test are omitted and the lengths marked with the letters "NH," the certification, where required, shall clearly state "Not Hydrostatically Tested," and the letters "NH" shall be appended to the product specification number and material grade shown on the certification.

14. Nondestructive Electric Test

14.1 As an alternative to the hydrostatic test at the option of the manufacturer or where specified in the purchase order as an alternative or addition to the hydrostatic test, the full body of each pipe shall be tested with a nondestructive electric test in accordance with Practice E 213, E 309, or E 570. In such cases, the marking of each length of pipe so furnished shall include the letters "NDE." It is the intent of this nondestructive electric test to reject pipe with imperfections that produce test signals equal to or greater than that produced by the applicable calibration standard.

14.2 Where the nondestructive electric test is performed, the lengths shall be marked with the letters "NDE." The certification, where required, shall state "Nondestructive Electric Tested" and shall indicate which of the tests was applied. Also, the letters "NDE" shall be appended to the product specification number and material grade shown on the certification.

14.3 The following information is for the benefit of the user of this specification:

14.3.1 The reference standards defined in 14.4 through 14.6 are convenient standards for calibration of nondestructive testing equipment. The dimensions of such standards are not to be construed as the minimum sizes of imperfections detectable by such equipment.

14.3.2 The ultrasonic testing referred to in this specification is capable of detecting the presence and location of significant longitudinally or circumferentially oriented imperfections: however, different techniques need to be employed for the detection of such differently oriented imperfections. Ultrasonic testing is not necessarily capable of detecting short, deep imperfections.

14.3.3 The eddy current examination referenced in this specification has the capability of detecting significant imperfections, especially of the short abrupt type.

14.3.4 The flux leakage examination referred to in this specification is capable of detecting the presence and location of significant longitudinally or transversely oriented imperfections: however, different techniques need to be employed for the detection of such differently oriented imperfections.

14.3.5 The hydrostatic test referred to in Section 13 has the capability of finding defects of a size permitting the test fluid to leak through the tube wall and may be either visually seen or detected by a loss of pressure. Hydrostatic testing is not necessarily capable of detecting very tight, through-the-wall imperfections or imperfections that extend an appreciable distance into the wall without complete penetration.

14.3.6 A purchaser interested in ascertaining the nature (type, size, location, and orientation) of discontinuities that can be detected in the specific applications of these examinations is directed to discuss this with the manufacturer of the tubular product.

14.4 For ultrasonic testing, the calibration reference notches shall be, at the option of the producer, any one of the three common notch shapes shown in Practice E 213. The depth of notch shall not exceed 12½ % of the specified wall thickness of the pipe or 0.004 in. [0.1 mm], whichever is greater.

14.5 For eddy current testing, the calibration pipe shall contain, at the option of the producer, any one of the following discontinuities to establish a minimum sensitivity level for rejection:

14.5.1 *Drilled Hole*—The calibration pipe shall contain depending upon the pipe diameter three holes spaced 120° apart or four holes spaced 90° apart and sufficiently separated longitudinally to ensure separately distinguishable responses. The holes shall be drilled radially and completely through the pipe wall, care being taken to avoid distortion of the pipe while drilling. Depending upon the pipe diameter the calibration pipe shall contain the following hole:

NPS	DN	Diameter of Drilled Hole
≤ ½	≤ 15	0.039 in. [1 mm]
> ½ ≤ 1¼	> 15 ≤ 32	0.055 in. [1.4 mm]
> 1¼ ≤ 2	> 32 ≤ 50	0.071 in. [1.8 mm]
> 2 ≤ 5	> 50 ≤ 125	0.087 in. [2.2 mm]
>5	> 125	0.106 in. [2.7 mm]

14.5.2 *Transverse Tangential Notch*—Using a round tool or file with a ¼-in. [6-mm] diameter, a notch shall be filed or milled tangential to the surface and transverse to the longitudinal axis of the pipe. The notch shall have a depth not exceeding 12 ½ % of the specified wall thickness of the pipe or 0.004 in. [0.1 mm], whichever is greater.

14.5.3 *Longitudinal Notch*—A notch 0.031 in. [0.8 mm] or less in width shall be machined in a radial plane parallel to the tube axis on the outside surface of the pipe, to have a depth not exceeding 12 ½ % of the specified wall thickness of the tube or 0.004 in. [0.1 mm], whichever is greater. The length of the notch shall be compatible with the testing method.

14.5.4 *Compatibility*—The discontinuity in the calibration pipe shall be compatible with the testing equipment and the method being used.

14.6 For flux leakage testing, the longitudinal calibration reference notches shall be straight-sided notches machined in a radial plane parallel to the pipe axis. For wall thicknesses under ½ in. [12.7 mm], outside and inside notches shall be used; for wall thicknesses equal to and above ½ in. [12.7 mm], only an outside notch shall be used. Notch depth shall not exceed 12½ % of the specified wall thickness, or 0.004 in. [0.1 mm], whichever is greater. Notch length shall not exceed 1 in. [25 mm], and the width shall not exceed the depth. Outside diameter and inside diameter notches shall be located sufficiently apart to allow separation and identification of the signals.

14.7 Pipe containing one or more imperfections that produce a signal equal to or greater than the signal produced by the calibration standard shall be rejected or the area producing the signal shall be reexamined.

14.7.1 Test signals produced by imperfections which cannot be identified, or produced by cracks or crack-like imperfections shall result in rejection of the pipe, unless it is repaired and retested. To be accepted, the pipe must pass the same specification test to which it was originally subjected, provided that the remaining wall thickness is not decreased below that permitted by this specification. The OD at the point of grinding may be reduced by the amount so reduced.

14.7.2 Test signals produced by visual imperfections such as those listed below may be evaluated in accordance with the provisions of Section 18:

14.7.2.1 Dinges,

14.7.2.2 Straightener marks,

14.7.2.3 Cutting chips,

14.7.2.4 Scratches,

14.7.2.5 Steel die stamps,

14.7.2.6 Stop marks, or

14.7.2.7 Pipe reducer ripple.

14.8 The test methods described in this section are not necessarily capable of inspecting the end portion of pipes, a condition referred to as "end effect." The length of such end effect shall be determined by the manufacturer and, when specified in the purchase order, reported to the purchaser.

15. Nipples

15.1 Nipples shall be cut from pipe of the same dimensions and quality described in this specification.

16. Dimensions, Mass, and Permissible Variations

16.1 *Mass*—The mass of any length of pipe shall not vary more than 10 % over and 3.5 % under that specified. Unless otherwise agreed upon between the manufacturer and the purchaser, pipe in NPS 4 [DN 100] and smaller may be weighed in convenient lots; pipe larger than NPS 4 [DN 100] shall be weighed separately.

16.2 *Diameter*—The tolerances for diameter shall be in accordance with the following:

16.2.1 Except for pipe ordered as special outside diameter tolerance pipe or as inside diameter tolerance pipe, variations in outside diameter shall not exceed those given in Table 3.

16.2.2 For pipe over 10 in. [250 mm] OD ordered as special outside diameter tolerance pipe, the outside diameter shall not vary more than 1 % over or 1 % under the specified outside diameter.

16.2.3 For pipe over 10 in. [250 mm] ID ordered as inside diameter tolerance pipe, the inside diameter shall not vary more than 1 % over or 1 % under the specified inside diameter.

16.3 *Thickness*—The minimum wall thickness at any point shall not be more than 12.5 % under the specified wall thickness.

17. Lengths

17.1 Pipe lengths shall be in accordance with the following regular practice:

17.1.1 The lengths required shall be specified in the order, and

17.1.2 No jointers are permitted unless otherwise specified.

TABLE 3 Variations in Outside Diameter

NPS [DN Designator]	Permissible Variations in Outside Diameter			
	Over		Under	
	in.	mm	in.	mm
⅛ to 1½ [6 to 40], incl	1/64 (0.015)	0.4	1/64 (0.015)	0.4
Over 1½ to 4 [40 to 100], incl	1/32 (0.031)	0.8	1/32 (0.031)	0.8
Over 4 to 8 [100 to 200], incl	1/16 (0.062)	1.6	1/32 (0.031)	0.8
Over 8 to 18 [200 to 450], incl	3/32 (0.093)	2.4	1/32 (0.031)	0.8
Over 18 to 26 [450 to 650], incl	⅛ (0.125)	3.2	1/32 (0.031)	0.8
Over 26 to 34 [650 to 850], incl	5/32 (0.156)	4.0	1/32 (0.031)	0.8
Over 34 to 48 [850 to 1200], incl	3/16 (0.187)	4.8	1/32 (0.031)	0.8

17.1.3 If definite lengths are not required, pipe may be ordered in single random lengths of 16 to 22 ft [4.8 to 6.7 m] with 5 % 12 to 16 ft [3.7 to 4.8 m], or in double random lengths with a minimum average of 35 ft [10.7 m] and a minimum length of 22 ft [6.7 m] with 5 % 16 to 22 ft [4.8 to 6.7 m].

18. Workmanship, Finish and Appearance

18.1 The pipe manufacturer shall explore a sufficient number of visual surface imperfections to provide reasonable assurance that they have been properly evaluated with respect to depth. Exploration of all surface imperfections is not required but consideration should be given to the necessity of exploring all surface imperfections to assure compliance with 18.2.

18.2 Surface imperfections that penetrate more than 12½ % of the nominal wall thickness or encroach on the minimum wall thickness shall be considered defects. Pipe with such defects shall be given one of the following dispositions:

18.2.1 The defect shall be removed by grinding, provided that the remaining wall thickness is within the limits specified in 16.3.

18.2.2 Repaired in accordance with the repair welding provisions of 18.6.

18.2.3 The section of pipe containing the defect may be cut off within the limits of requirements on length.

18.2.4 Rejected.

18.3 To provide a workmanlike finish and basis for evaluating conformance with 18.2 the pipe manufacturer shall remove by grinding the following noninjurious imperfections:

18.3.1 Mechanical marks, abrasions (Note 5) and pits, any of which imperfections are deeper than 1/16 in. [1.6 mm].

18.3.2 Visual imperfections commonly referred to as scabs, seams, laps, tears, or slivers found by exploration in accordance with 18.1 to be deeper than 5 % of the nominal wall thickness.

18.4 At the purchaser's discretion, pipe shall be subjected to rejection if surface imperfections acceptable under 18.2 are not scattered, but appear over a large area in excess of what is considered a workmanlike finish. Disposition of such pipe shall be a matter of agreement between the manufacturer and the purchaser.

18.5 When imperfections or defects are removed by grinding, a smooth curved surface shall be maintained, and the wall thickness shall not be decreased below that permitted by this specification. The outside diameter at the point of grinding is permitted to be reduced by the amount so removed.

18.5.1 Wall thickness measurements shall be made with a mechanical caliper or with a properly calibrated nondestructive testing device of appropriate accuracy. In case of dispute, the measurement determined by use of the mechanical caliper shall govern.

18.6 Weld repair shall be permitted only subject to the approval of the purchaser and in accordance with Specification A 530/A 530M.

18.7 The finished pipe shall be reasonably straight.

NOTE 5—Marks and abrasions are defined as cable marks, dinges, guide marks, roll marks, ball scratches, scores, die marks, etc.

19. End Finish

19.1 The Pipe shall be furnished to the following practice, unless otherwise specified.

19.1.1 *NPS 1½ [DN 40] and Smaller*—All walls shall be either plain-end square cut, or plain-end beveled at the option of the manufacturer.

19.1.2 *NPS 2 [DN 50] and Larger*—Walls through extra strong weights, shall be plain-end-beveled.

19.1.3 *NPS 2 [DN 50] and Larger*—Walls over extra strong weights, shall be plain-end square cut.

NOTE 6—Plain-end beveled is defined as plain-end pipe having a bevel angle of 30°, +5° or -0°, as measured from a line drawn perpendicular to the axis of the pipe with a root face of 1/16 ± 1/32 in. [1.6 ± 0.8 mm]. Other bevel angles may be specified by agreement between the purchaser and the manufacturer.

20. Number of Tests

20.1 The tensile requirements specified in Section 7 shall be determined on one length of pipe from each lot (Note 3) of 400 lengths or fraction thereof of each size under NPS 6 [DN 150], and from each lot of 200 lengths or fraction thereof of each size NPS 6 [DN 150] and over.

20.2 For pipe NPS 2 [DN 50] and under, the bend test specified in 11.1 shall be made on one pipe from each lot of 400 lengths or fraction thereof of each size. The bend test, where used as permitted by 11.2 or required by 11.3, shall be made on one end of 5 % of the pipe from each lot. For small lots, at least one pipe shall be tested.

20.3 The flattening test specified in Section 12 shall be made on one length of pipe from each lot of 400 lengths or fraction thereof of each size over NPS 2 [DN 50], up to but not including NPS 6 [DN 150], and from each lot of 200 lengths or fraction thereof, of each size NPS 6 [DN 150] and over.

20.4 If any test specimen shows flaws or defective machining, it shall be permissible to discard it and substitute another test specimen.

21. Retests

21.1 If the percentage of elongation of any tension test specimen is less than that given in Table 1 and any part of the fracture is more than ¾ in. [19 mm] from the center of the gage length of a 2-in. [50-mm] specimen as indicated by scribe scratches marked on the specimen before testing, a retest shall be allowed. If a specimen breaks in an inside or outside surface flaw, a retest shall be allowed.

21.2 Should a crop end of a finished pipe fail in the flattening test, one retest is permitted to be made from the failed end. Pipe shall be normalized either before or after the first test, but pipe shall be subjected to only two normalizing treatments.

22. Test Specimens and Test Methods

22.1 On NPS 8 [DN 200] and larger, specimens cut either longitudinally or transversely shall be acceptable for the tension test. On sizes smaller than NPS 8 [DN 200], the longitudinal test only shall be used.

22.2 When round tension test specimens are used for pipe wall thicknesses over 1.0 in. [25.4 mm], the mid–length of the longitudinal axis of such test specimens shall be from a location midway between the inside and outside surfaces of the pipe.

22.3 Test specimens for the bend test specified in Section 11 and for the flattening tests shall consist of sections cut from a pipe. Specimens for flattening tests shall be smooth on the ends and free from burrs, except when made on crop ends.

22.4 Test specimens for the bend test specified in 11.2 and 11.3 shall be cut from one end of the pipe and, unless otherwise specified, shall be taken in a transverse direction. One test specimen shall be taken as close to the outer surface as possible and another from as close to the inner surface as possible. The specimens shall be either ½ by ½ in. [12.5 by 12.5 mm] in section or 1 by ½ in. [25 by 12.5 mm] in section with the corners rounded to a radius not over 1/16 in. [1.6 mm] and need not exceed 6 in. [150 mm] in length. The side of the samples placed in tension during the bend shall be the side closest to the inner and outer surface of the pipe respectively.

22.5 All routine check tests shall be made at room temperature.

23. Certification

23.1 When test reports are requested, in addition to the requirements of Specification A 530/A 530M, the producer or supplier shall furnish to the purchaser a chemical analysis report for the elements specified in Table 1.

24. Product Marking

24.1 In addition to the marking prescribed in Specification A 530/A 530M, the marking shall include heat number, the information as per Table 4, an additional symbol "S" if one or more of the supplementary requirements apply; the length, OD 1 %, if ordered as special outside diameter tolerance pipe; ID 1 %, if ordered as special inside diameter tolerance pipe; the schedule number, weight class, or nominal wall thickness; and, for sizes larger than NPS 4 [DN 100], the weight. Length shall be marked in feet and tenths of a foot [metres to two decimal places], depending on the units to which the material was ordered, or other marking subject to agreement. For sizes NPS 1½ , 1¼ , 1, and ¾ [DN 40, 32, 25, and 20], each length shall be marked as prescribed in Specification A 530/A 530M. These sizes shall be bundled in accordance with standard mill practice and the total bundle footage marked on the bundle tag; individual lengths of pipe need not be marked with footage. For sizes less than NPS ¾ [DN 20], all the required markings shall be on the bundle tag or on each length of pipe and shall include the total footage; individual lengths of pipe need not be marked with footage. If not marked on the bundle tag, all required marking shall be on each length.

24.2 When pipe sections are cut into shorter lengths by a subsequent processor for resale as material, the processor shall

TABLE 4 Marking

Hydro	NDE	Marking
Yes	No	Test Pressure
No	Yes	NDE
No	No	NH
Yes	Yes	Test Pressure/NDE

transfer complete identifying information, including the name or brand of the manufacturer to each unmarked cut length, or to metal tags securely attached to bundles of unmarked small diameter pipe. The same material designation shall be included with the information transferred, and the processor's name, trademark, or brand shall be added.

24.3 *Bar Coding*—In addition to the requirements in 24.1 and 24.2, bar coding is acceptable as a supplementary identification method. The purchaser may specify in the order a specific bar coding system to be used.

25. Government Procurement

25.1 When specified in the contract, material shall be preserved, packaged, and packed in accordance with the requirements of MIL-STD-163. The applicable levels shall be as specified in the contract. Marking for the shipment of such material shall be in accordance with Fed. Std. No. 123 for civil agencies and MIL-STD-129 or Fed. Std. No. 183 if continuous marking is required for military agencies.

25.2 *Inspection*—Unless otherwise specified in the contract, the producer is responsible for the performance of all inspection and test requirements specified herein. Except as otherwise specified in the contract, the producer shall use his own, or any other suitable facilities for the performance of the inspection and test requirements specified herein, unless disapproved by the purchaser. The purchaser shall have the right to perform any of the inspections and tests set forth in this specification where such inspections are deemed necessary to ensure that the material conforms to the prescribed requirements.

26. Keywords

26.1 carbon steel pipe; seamless steel pipe; steel pipe

SUPPLEMENTARY REQUIREMENTS

One or more of the following supplementary requirements shall apply only when specified in the purchase order. The purchaser may specify a different frequency of test or analysis than is provided in the supplementary requirement. Subject to agreement between the purchaser and manufacturer, retest and retreatment provisions of these supplementary requirements may also be modified.

S1. Product Analysis

S1.1 Product analysis shall be made on each length of pipe. Individual lengths failing to conform to the chemical composition requirements shall be rejected.

S2. Transverse Tension Test

S2.1 A transverse tension test shall be made on a specimen from one end or both ends of each pipe NPS 8 [DN 200] and over. If this supplementary requirement is specified, the number of tests per pipe shall also be specified. If a specimen from any length fails to meet the required tensile properties (tensile, yield, and elongation), that length shall be rejected subject to retreatment in accordance with Specification A 530/A 530M and satisfactory retest.

S3. Flattening Test

S3.1 The flattening test of Specification A 530/A 530M shall be made on a specimen from one end or both ends of each pipe. Crop ends may be used. If this supplementary requirement is specified, the number of tests per pipe shall also be specified. If a specimen from any length fails because of lack of ductility prior to satisfactory completion of the first step of the flattening test requirement, that pipe shall be rejected subject to retreatment in accordance with Specification A 530/A 530M and satisfactory retest. If a specimen from any length of pipe fails because of a lack of soundness, that length shall be rejected, unless subsequent retesting indicates that the remaining length is sound.

S4. Metal Structure and Etching Test

S4.1 The steel shall be homogeneous as shown by etching tests conducted in accordance with the appropriate sections of Method E 381. Etching tests shall be made on a cross section from one end or both ends of each pipe and shall show sound and reasonably uniform material free from injurious laminations, cracks, and similar objectionable defects. If this supplementary requirement is specified, the number of tests per pipe required shall also be specified. If a specimen from any length shows objectionable defects, the length shall be rejected, subject to removal of the defective end and subsequent retests indicating the remainder of the length to be sound and reasonably uniform material.

S5. Carbon Equivalent

S5.1 The steel shall conform to a carbon equivalent (CE) of 0.50 maximum as determined by the following formula:

$$CE = \%C + \frac{\%Mn}{6} + \frac{\%Cr + \%Mo + \%V}{5} + \frac{\%Ni + \%Cu}{15}$$

S5.2 A lower CE maximum may be agreed upon between the purchaser and the producer.

S5.3 The CE shall be reported on the test report.

S6. Heat Treated Test Specimens

S6.1 At the request of the purchaser, one tensile test shall be performed by the manufacturer on a test specimen from each heat of steel furnished which has been either stress relieved at 1250 °F or normalized at 1650 °F, as specified by the purchaser. Other stress relief or annealing temperatures, as appropriate to the analysis, may be specified by agreement between the purchaser and the manufacturer. The results of this test shall meet the requirements of Table 1.

S7. Internal Cleanliness–Government Orders

S7.1 The internal surface of hot finished ferritic steel pipe and tube shall be manufactured to a free of scale condition

equivalent to the visual standard listed in SSPC-SP6. Cleaning shall be performed in accordance with a written procedure that has been shown to be effective. This procedure shall be available for audit.

S8. Requirements for Carbon Steel Pipe for Hydrofluoric Acid Alkylation Service

S8.1 Pipe shall be provided in the normalized heat-treated condition.

S8.2 The carbon equivalent (CE), based upon heat analysis, shall not exceed 0.43 % if the specified wall thickness is equal to or less than 1 in. [25.4 mm] or 0.45 % if the specified wall thickness is greater than 1 in. [25.4 mm].

S8.3 The carbon equivalent (CE) shall be determined using the following formula:

$$CE = C + Mn/6 + (Cr + Mo + V)/5 + (Ni + Cu)/15$$

S8.4 Based upon heat analysis in mass percent, the vanadium content shall not exceed 0.02 %, the niobium content shall not exceed 0.02 %, and the sum of the vanadium and niobium contents shall not exceed 0.03 %.

S8.5 Based upon heat analysis in mass percent, the sum of the nickel and copper contents shall not exceed 0.15 %.

S8.6 Based upon heat analysis in mass percent, the carbon content shall not be less than 0.18 %.

S8.7 Welding consumables of repair welds shall be of low hydrogen type. E60XX electrodes shall not be used and the resultant weld chemical composition shall meet the chemical composition requirements specified for the pipe.

S8.8 The designation "HF-N" shall be stamped or marked on each pipe to signify that the pipe complies with this supplementary requirement.

SUMMARY OF CHANGES

Committee A01 has identified the location of selected changes to this specification since the last issue, A 106 – 04a, that may impact the use of this specification. (Approved October 1, 2004)

(*1*) Revised 1.2 to delete the number of Supplementary Requirements.

(*2*) Revised 13.3 to permit the supply of hydrostatically tested or nondestructively tested pipe, and to prohibit the supply of pipe that has failed either test, both when NH pipe has been ordered.

Committee A01 has identified the location of selected changes to this specification since the last issue, A 106 – 04, that may impact the use of this specification. (Approved July 1, 2004)

(*1*) Editorially revised Supplementary Requirements S8.

Committee A01 has identified the location of selected changes to this specification since the last issue, A 106 – 02a, that may impact the use of this specification. (Approved March 1, 2004)

(*1*) Deleted Note 2 in 1.1.
(*2*) Deleted Tables 3 and 4 and renumbered subsequent tables.
(*3*) Deleted Appendixes X1 and X2.
(*4*) Included rationalized SI units throughout, creating a combined standard.
(*5*) Added Supplementary Requirements S8 for HF acid alkylation service.

ASTM International takes no position respecting the validity of any patent rights asserted in connection with any item mentioned in this standard. Users of this standard are expressly advised that determination of the validity of any such patent rights, and the risk of infringement of such rights, are entirely their own responsibility.

This standard is subject to revision at any time by the responsible technical committee and must be reviewed every five years and if not revised, either reapproved or withdrawn. Your comments are invited either for revision of this standard or for additional standards and should be addressed to ASTM International Headquarters. Your comments will receive careful consideration at a meeting of the responsible technical committee, which you may attend. If you feel that your comments have not received a fair hearing you should make your views known to the ASTM Committee on Standards, at the address shown below.

This standard is copyrighted by ASTM International, 100 Barr Harbor Drive, PO Box C700, West Conshohocken, PA 19428-2959, United States. Individual reprints (single or multiple copies) of this standard may be obtained by contacting ASTM at the above address or at 610-832-9585 (phone), 610-832-9555 (fax), or service@astm.org (e-mail); or through the ASTM website (www.astm.org).

RUPERT PLUMBING AND HEATING

PIPE FABRICATION

Combination Air Vent – Shown on drawing 140705-001-PI-03-400002

James, Cooke & Hobson, Inc.

Sales Engineers / Process Equipment

Submittal Data

Kirtland AFB Phase 4 Treatment Plant
Albuquerque, NM

Cla-Val Model 36 Combination Air Valve

Albuquerque • El Paso • Phoenix

Submittals

June 9, 2015

Albuquerque, New Mexico

Cla-Val Model 36 combination air valve
1" NPT inlet and outlet
Model 361-CAV564.3

Prepared for: Albuquerque Pump and Pipe
4300 Ellison Street NE
Albuquerque, NM 87109

Prepared by: JCH/ James, Cooke & Hobson
Kendra Brown
3810 Academy Parkway S. NE
Albuquerque, NM 87109

Table of Contents

1. Project references
    a. Equipment Supplier/ Local Representative/ Parts & Service Contact
    b. Manufacturer

2. Submittal Data

Project References

1. Equipment Supplier & Source for Parts and Repairs:
   JCH/ James, Cooke & Hobson, Inc.
   3810 Academy Parkway S, NE
   Albuquerque, NM 87109
   Website: www.jchinc.com
   Email: sales@jchinc.com
   (505) 344-7100

   Order number: N/A

2. Manufacturer:
   Cla-Val
   1701 Placentia Ave.
   Costa Mesa, CA 92627-4475
   Website: www.cla-val.com
   800-942-6326

Submittal Data

CLA-VAL™

Series 36
Combination Air Release and Vacuum Valve

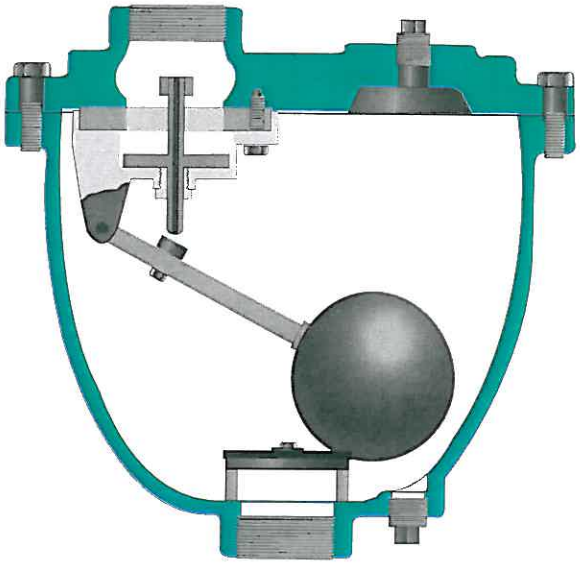

- **Stainless Steel T316 Standard**
- **Stainless Steel T316 Floats Guaranteed**
- **Fully Ported Valves - No Restrictions**
- **Easily Serviced Without Removal From Pipeline**
- **Engineered For Drip Tight Seal At Low Pressures**

The Cla-Val Series 36 Air and Vacuum Valve is a multipurpose valve that combines the operation of both the Model 34 Air Release Valve and Model 35 Air and Vacuum Valve. It functions to exhaust large quantities of air in the pipeline during the filling cycle and to admit air, as necessary, to prevent potentially dangerous vacuum from forming when being emptied either intentionally or as a result of pipeline breakage.

Note: See Sizing Guide Pages 14 & 15

Installation

The Series 36 Combination Air Valve should be installed at high points at grade changes within the pipeline.

Mount the unit in the vertical position on top of the pipeline with an isolation valve installed below each valve in the event servicing is required. A vault with adequate venting and drainage should also be provided.

Design / Purchase Specifications

The combination air valve shall combine the operating features of both an air and vacuum valve and an air release valve in one housing. The air and vacuum valve portion shall automatically exhaust large quantities of air during the filling of the pipeline and automatically allow air to reenter the pipeline when the internal pressure of the pipeline approaches a negative value due to column separation, draining of the pipeline, or other emergency. The air release valve portion shall automatically release small amounts of air from the pipeline while it is under pressure.

The inlet and outlet of the valve shall have the same cross-section area. The float shall be guided by a stainless steel guide shaft and seat drip tight against a synthetic rubber seal. 4" and larger valves shall have dual guided shafts of hexagonal cross section and a protective discharge hood.

The float shall be of all stainless steel construction and capable of withstanding maximum system surge pressure without failure. The body and cover shall be concentrically located and of cast iron and the valve internal parts shall be of T316 stainless steel or Buna-N® rubber.

The Combination Air Release and Vacuum Valve shall be manufactured per ANSI/AWWA C512-04 Series 36 from Cla-Val., Newport Beach, CA, U.S.A.

Design Specifications

Size Inlet/Outlet
1" 2", 3", 4" NPT or Flanged
3" through 8"
125 lb. flange & ANSI
300 lb. flange & ANSI

Pressure Ratings (see note)
150 psi
300 psi

Temperature Range
Water to 180°F

Note: Specify when operating pressure is below 10 PSI

Materials
Body and Cover:
Cast Iron ASTM A 126, Class B

Float:
Stainless Steel T316

Plug:
Stainless Steel T316

Internal Parts:
Stainless Steel T316

Seal: Buna-N® Rubber

Note: Manufactured to meet ANSI/AWWA C512-04

When Ordering, Please Specify

1. Model Number
2. Inlet/Outlet Size
3. Inlet Pressure Rating
4. Orifice Size

Optional:
For Anti-Shock Air Valve shut-off, order with arrestor check device (suffix "AC").
See Data Sheet Page 34 & 35

CLA-VAL

Series 36

Combination Air Valve – Single Body Style

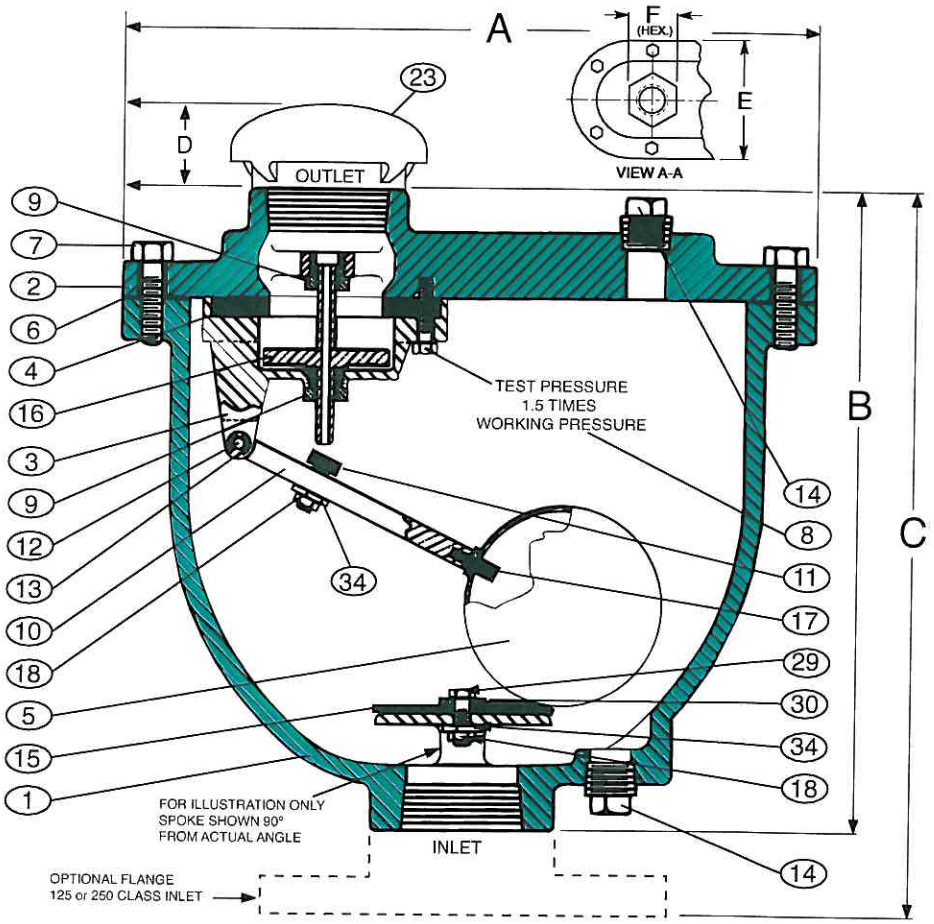

Detail No.	Part Name	Material
1	Body	Cast Iron ASTM A126, Class B
2	Cover	Cast Iron ASTM A126, Class B
3	Baffle	Cast Iron ASTM A126, Class B
4	Seat	Buna-N®
5	Float	Stainless Steel T316, ASTM A276
6	Gasket	Lexide NK - 511 (Non-Asbestos)
7	Cover Bolt	Alloy Steel ASTM A449, Grade 5
8	Retaining Screw	Stainless Steel T316, ASTM A276
9	Guide Bushing	Stainless Steel T316, ASTM A276
10	Float Arm	Stainless Steel T316, ASTM A276

Detail No.	Part Name	Material
11	Orifice Button	Stainless Steel T316 & Buna-N®
12	Pivot Pin	Stainless Steel T316, ASTM A276
13	Retaining Ring	Stainless Steel PH 15-7 MO
14	Pipe Plug	Malleable Iron
15	Cushion	Buna-N®
16	Plug	Stainless Steel T316, ASTM A276
17	Float Retainer	Stainless Steel T316, ASTM A276
18	Lock Nut	Stainless Steel T316, ASTM A276
23	Screened Hood	Optional-Screened Outlet Hood
29	Cushion Retainer	Stainless Steel T316, ASTM A276
30	Washer (internal)	Stainless Steel T316, ASTM A276
34	Washer (external)	Stainless Steel T316, ASTM A276

Note 1: All Stainless Steel Parts Austenitic
Note 2: Manufactured to meet ANSI/AWWA C512-04

Valve Size	Model No.	A	B	C	D Approx.	E	F	Inlet Size	Outlet Size	Orifice Size	CWP PSI	Inlet** Flange	Screened Hood	Wt. Lbs.
1"	361-CAV564.3	11 3/8"	10 1/2"	12"	2"	7"	2"	1" N.P.T	1" N.P.T	3/32"	300	SPK-001F	SPK-1H	40
2"	362-CAV332.3	14"	13"	15"	3"	8"	3"	2" N.P.T	2" N.P.T	3/32"	300	SPK-002F	SPK-2H	71
3"	363-CAV332.3	16"	15"	17"	4"	9 5/8"	4 3/8"	3" N.P.T.	3" N.P.T	3/32"	300	SPK-003F	SPK-3H	112
4"	364-CAV332.3	18 1/2	17"	19"	5"	11"	5 3/8"	4" N.P.T	4" N.P.T	3/32"	300	SPK-004F	SPK-4H	170

© Copyright Cla-Val 2007 Printed in USA Specifications subject to change without notice.

RUPERT

PLUMBING AND HEATING

PIPE FABRICATION

Butterfly Valves

Resilient Seated Butterfly Valves

ABZ VALVE | A GFT COMPANY

Figures 101/108/102

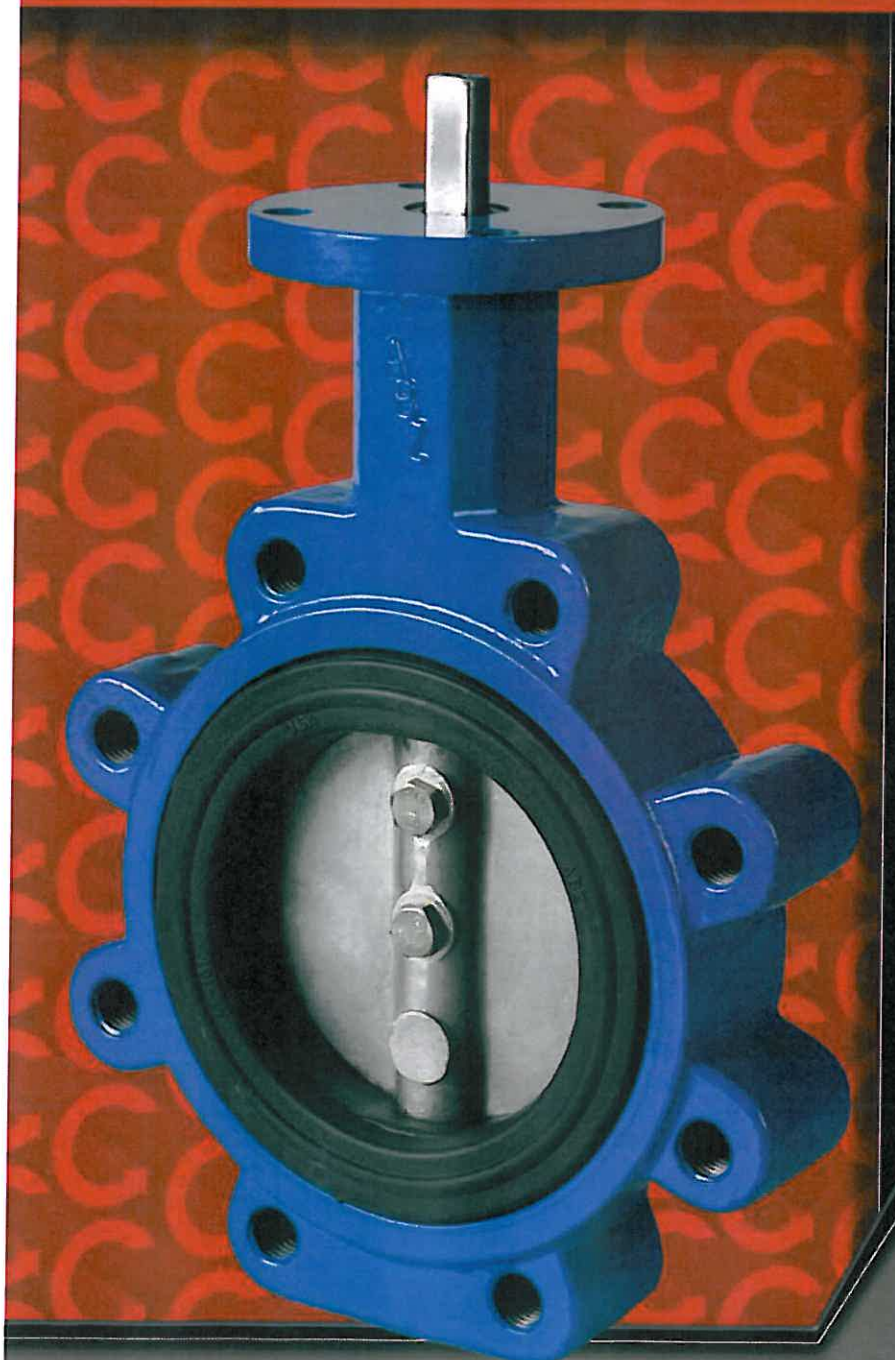

Sizes
2" - 12"
Rated Up To 175 PSI

ABZ VALVES & CONTROLS
PO Box 157 • 113 W. Main • Madison, KS 66860
620-437-2440 • FAX 620-437-2435
www.abzvalve.com • info@abzvalve.com

ABZ Precision Built Butterfly Valves

Resil-O-Seat™ Seated Valves for Chemical and Abrasion Resistance Applications.

The figures 101/102/108 provide excellent flexibility with a variety of trim materials. These are available for a wide selection of applications.

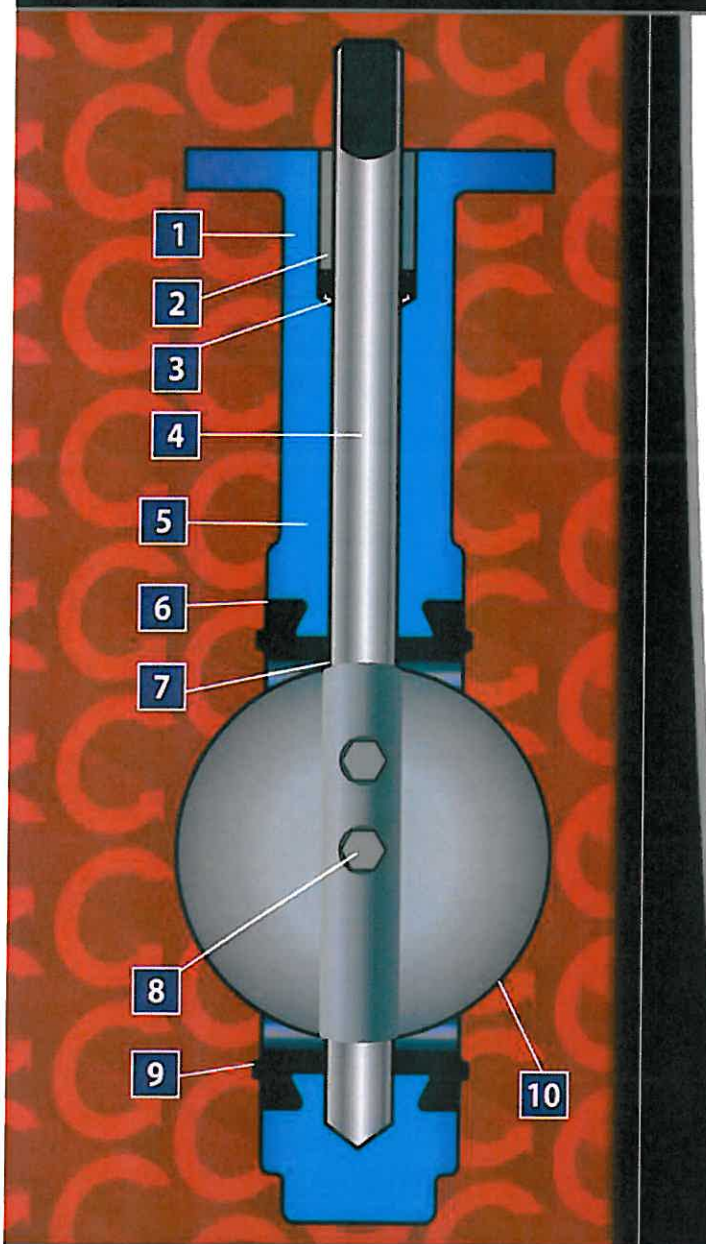

1 Body machined to high tolerances. Guaranteed standard dimensions for interchangeability of parts and actuators.

2 Top bushings protect the stem from side thrust of operators. They are made of impact and corrosion resistant materials.

3 Special double-V-shape of stem seal self-adjusts to protect the stem area for either vacuum or pressure use.

4 Stem extends through disc and aligns with socket in body. Stem end has standard dimensions for operator interchangeability.

5 Long neck allows for insulation requirements.

6 The special snap-in Resil-O-Seat™ design fixes seat in place without bonding. The Resil-O-Seat™ is 100% field replaceable - no special tools required.

7 Stem and body are isolated from the line media by the interference fit of the primary seal created between the disc and seat.

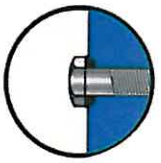

8 Stainless steel cap screws securely hold disc to stem. O-ring seal prevents leakage into the stem area and creates a positive connection.

9 Resil-O-SeatTM forms a seal against all standard ANSI 125/150 flanges. Gasketing requirements are eliminated.

10 Disc edge is individually processed through machining and hand buffing for a smooth edge, providing a bubble tight shutoff and maximum seat life.

101 is a wafer style body
108 is semi-lug style body
102 is a full lug style body

FIGURES 101/108/102

Valve Dimensions

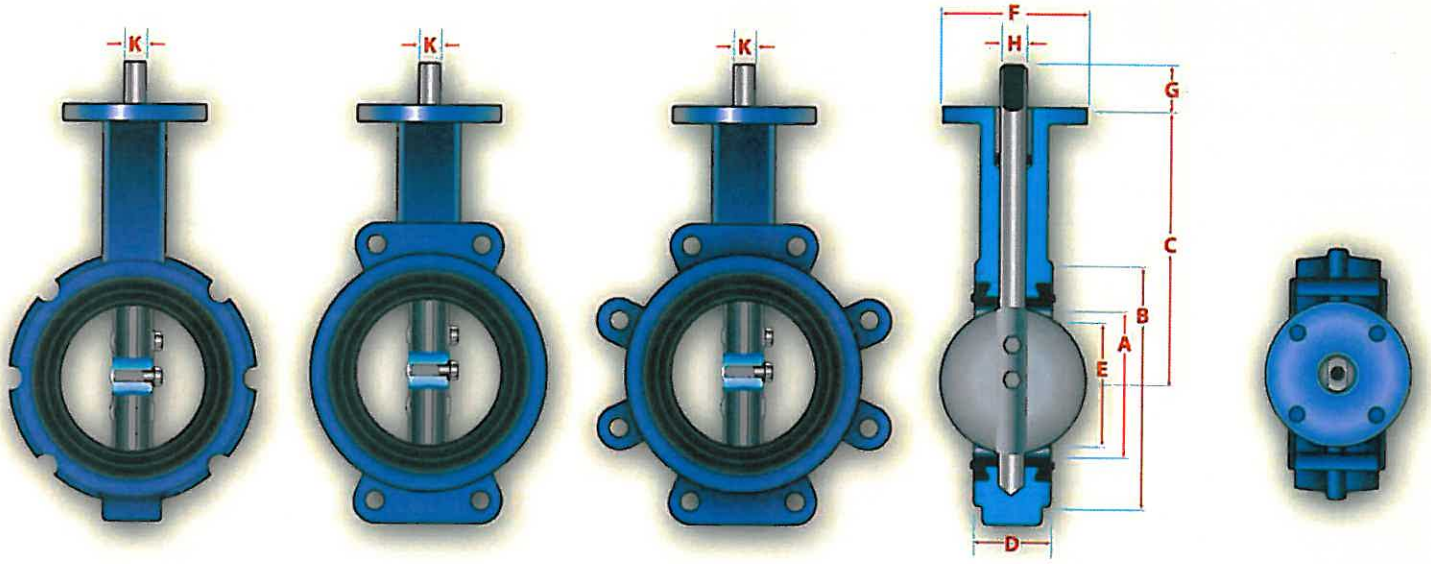

All standard seats are Food Grade with the exception of Viton

Valve Size	DIMENSIONS									TOP PLATE DRILLING			TAPPED LUG DATA				WEIGHT (POUNDS)		
	A	B	C	D	E	F	G	H	K	Bolt Circle	No. Holes	Hole Dia.	Bolt Circle	No. Holes 102	No. Holes 108	Tap	101	108	102
2	2 1/8	4 1/8	5 1/2	1 5/8	1 11/16	4	1 1/4	9/16	3/8	3 1/4	4	7/16	4 3/4	4	4	5/8-11 UNC	7	8	8
2 1/2	2 9/16	4 7/8	6	1 3/4	2 3/16	4	1 1/4	9/16	3/8	3 1/4	4	7/16	5 1/2	4	4	5/8-11 UNC	8	9	9
3	3 1/8	5 3/8	6 1/4	1 3/4	2 7/8	4	1 1/4	9/16	3/8	3 1/4	4	7/16	6	4	4	5/8-11 UNC	9	10	10
4	4 1/8	6 7/8	7	2	3 7/8	4	1 1/4	5/8	7/16	3 1/4	4	7/16	7 1/2	8	4	5/8-11 UNC	13	17	20
5	5 3/16	7 5/8	7 1/2	2 1/8	5	4	1 1/4	5/8	7/16	3 1/4	4	7/16	8 1/2	8	4	3/4-10 UNC	19	20	23
6	6 1/8	8 3/4	8	2 1/8	6	4	1 1/4	5/8	7/16	3 1/4	4	7/16	9 1/2	8	4	3/4-10 UNC	20	24	27
8	8 1/8	11	9 1/2	2 1/2	8	6	1 1/4	3/4	1/2	5	4	9/16	11 3/4	8	4	3/4-10 UNC	36	38	43
10	10 1/8	13 3/8	10 3/4	2 1/2	10 1/16	6	1 1/4	7/8	5/8	5	4	9/16	14 1/4	12	4	7/8-9 UNC	49	55	63
12	12 1/8	16 1/8	12 1/4	3	11 15/16	6	2	1 1/8	1/4	5	4	9/16	17	12	4	7/8-9 UNC	70	82	90

STANDARD CONSTRUCTION SPECIFICATIONS:

Body: Cast Iron, Ductile Iron (Lug) and Aluminum (Wafer)

Disc: 316 Stainless Steel, Aluminum Bronze, Ductile Iron, Epoxy Coated Ductile Iron

Stem: 316 Stainless Steel, 416 Stainless Steel, Carbon Steel

Resilient Seat: EPDM, Buna-N, Viton, Natural Rubber, White Buna, White Neoprene.

Stem Bushing: Teflon® – Graphite Impregnated

Stem Packing: Buna-N and Viton

Additional materials are available for a wide selection of applications.

NOTES:

1. Dimension "K" not applicable to 12" size. The 12" stem is round with ¼" Key.
2. The figures 101, 102 and 108 cannot be used on pipe or flange with an inside diameter less than the "E" dimension.
3. Valves are rated up to 175 PSI bi-directional service and 85 PSI end of line rating. Undercut disc is rated up to 50 PSI bi-directional service and 25 PSI end of line rating. Preferred direction is with disc bolts on downstream side of disc.
4. Designed in accordance with sections of API 609 Catagory A, ASME 16.1/16.5, ASME 16.34 and MSS SP67. Design tested in accordance with API 598.
5. Compatible with ANSI Class 125/150 flange standards.

Rated Flow Coefficient (Cv) - Figure 101/108/102

Valve Size	ANGLE OF DISC OPENING								
	10°	20°	30°	40°	50°	60°	70°	80°	90°
2	1.67	7.7	17	29	48	74	115	145	195
2 1/2	2.50	11.0	25	44	69	109	174	237	307
3	3.33	15.7	37	64	105	165	276	377	487
4	5.00	27.7	63	110	177	278	472	671	827
5	8.33	43.7	99	177	276	443	752	1,083	1,325
6	13.33	58.7	136	242	385	616	1,075	1,521	1,883
8	20.00	107.3	247	434	687	1,094	1,821	2,671	3,239
10	31.67	174.0	394	696	1,092	1,770	2,983	4,288	5,210
12	47.0	251.7	578	1,002	1,665	2,654	4,398	6,466	8,026

Cv is defined as the volume of water in U.S.G.P.M. that will flow through a given restriction or valve opening with a pressure drop of one (1) p.s.i. at room temperature. Recommended control angles are between 25°-70° open.

Torque Chart - Figure 101/108/102

Valve Size	NORMAL CONDITIONS					SEVERE CONDITIONS				
	Δ P=0	Δ P=50	Δ P=100	Δ P=150	Δ P=175	Δ P=0	Δ P=50	Δ P=100	Δ P=150	Δ P=175
2	221	230	240	250	254	373	384	400	406	410
2 1/2	269	283	288	302	311	454	464	475	486	497
3	322	341	365	379	392	540	568	589	611	634
4	480	514	542	576	590	816	848	886	918	936
5	653	706	754	806	854	1,102	1,162	1,220	1,274	1,301
6	907	1,008	1,109	1,210	1,260	1,529	1,642	1,756	1,868	1,926
8	1,512	1,714	1,915	2,112	2,215	2,549	2,776	3,002	3,229	3,343
10	2,318	2,621	2,900	3,224	3,372	3,910	4,250	4,590	4,931	5,101
12	3,125	3,629	4,138	4,637	6,112	5,270	5,838	6,404	6,971	7,258

Undercut disc available.

All torques shown in inch lbs. 20% Safety factor already included.

ABZ VALVES & CONTROLS, INC.
A Global Flow Technologies Company
P.O. Box 157 • 113 West Main • Madison, KS 66860
PHONE: 620-437-2440 • FAX: 620-437-2435
www.abzvalve.com • www.globalflowtech.com
info@abzvalve.com

The data presented in this bulletin is for general information only. Manufacture is not responsible for compatibility or acceptability of these products in relation to system requirements. Patents and Patents Pending in U.S. and foreign countries. All rights reserved. Printed in U.S.A. ABZ reserves the right to change product designs and specifications without notice. Copyright 2008.

Certified System ISO 9001-2008

RUPERT

PLUMBING AND HEATING

PIPE FABRICATION

BALL VALVES

"Apollo" Valves

SUBMITTAL SHEET

LEAD FREE

77CLF Series

Bronze Full Port **Ball Valve**

Job Name:	
Job Location:	
Engineer:	
Contractor:	
Tag:	
PO Number:	
Representative:	
Wholesale Distributor:	

DESCRIPTION

The Apollo® 77CLF "Contractor Series" 2 piece ball valve features a de-zincification resistant, Lead Free* bronze body, premium "multi-fill" MPTFE seats and stem packing, and a Lead Free* "Solid Ball" design that delivers true full-port flow performance. Cast and machined in Apollo's South Carolina manufacturing plants using proven Lead Free* materials.

FEATURES

- Easily Identifiable White Handle and Blue "Lead Free" Hang Tag
- EZ-Solder™ Lead Free Bronze
- Lead Free* Brass & Bronze Materials
- NSF/ANSI 61 Section 8, Annex F & G
- Multi-Fill PTFE Seats & Seals.
- Manufactured and 100% Factory Tested in the USA

PERFORMANCE RATING

- Maximum Pressure: 600 psi CWP, 150 SWP
- Maximum Temperature: 500°F
- Vacuum service to 29 in. Hg

APPROVALS

- MSS SP-110; Ball Valves
- NSF/ANSI 61 Section 8, Annex F & G
- NSF/ANSI 372 Lead Free
- ANSI 3rd Party Approval to 0.25% Lead Max.
- CSA B51 CRN: OC10908.5C
- IAPMO R&T / UPC - IGC 157
- City of Los Angeles DBS

OPTIONS (For 1/4" to 2")

- (-01) Standard
- (-04) 2-1/4" Stem Extension
- (-07) Tee Handle
- (-10) S.S. Handle and Nut
- (-11) Therma-Seal™ Insulating Tee Handle
- (-27) Locking Handle
- (-92) Standard lever with Balancing Stop
- (-94) 2-1/4" Stem Extension with Balancing Stop

MODELS

- 77CLF100/200 Series - Standard Trim
- 77CLF140/240 Series - 316 SS Ball & Stem

STANDARD MATERIALS LIST

Part Name	Material
Gland	B16 Brass
Nut	Zinc Plated Steel
Packing	MPTFE
Seat	MPTFE
Stem	C27451 Lead Free* Brass
Ball	C27451 Lead Free* Brass Cr. Plated or B283, C37700
Retainer	C27451 Lead Free* Brass or B283, C37700 (1/4"-1/2")
	B584-C89836 Lead Free* Bronze (3/4"-2 1/2")
Body	B584-C89836 Lead Free* Bronze
Handle	Zinc Plated Steel w/ Vinyl Grip

– Continued on the next page.

** LEAD FREE: The wetted surfaces of this product shall contain no more than 0.25% lead by weighted average. Complies with Federal Public Law 111-380. ANSI 3rd party approved and listed.*

Apollo Valves, Manufactured by **Conbraco Industries, Inc.**
701 Matthews Mint-Hill Road, Matthews, NC 28105 USA
www.**apollovalves**.com | (704) 841-6000

This specification is provided for reference only. Conbraco Industries Inc. reserves the right to change any portion of this specification without notice and without incurring obligation to make such changes to Conbraco products previously or subsequently sold. Please visit our website @ www.apollovalves.com for the most current information.

AALBERTS INDUSTRIES

"Apollo" Valves

SUBMITTAL SHEET

LEAD FREE

77CLF Series

Bronze Full Port **Ball Valve**

NPT

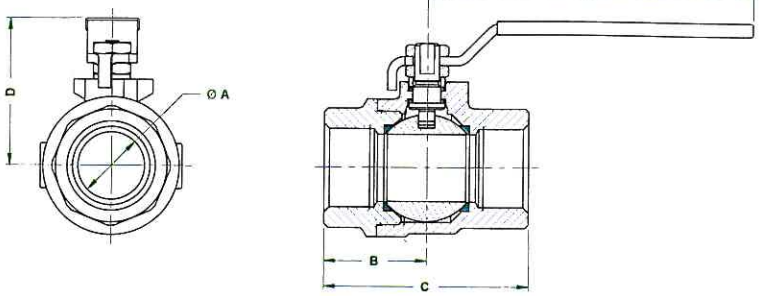

Solder

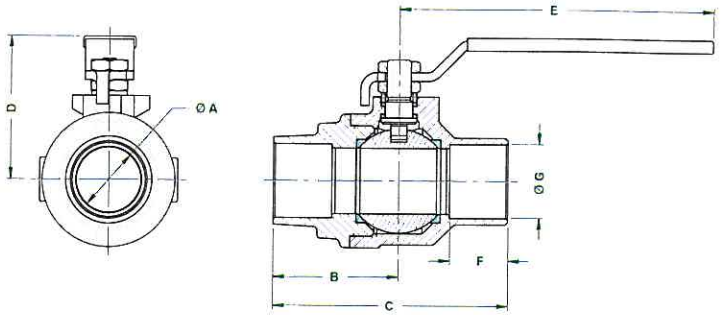

DIMENSIONS

LF Part Number	Size (in.)	Dimensions (in.)								Wt. *** (lbs.)
		A	B	C	D	E	F	G	Cv	
NPT										
77CLF-101-01	1/4"	0.37	0.95	1.97	1.76	3.74	-	-	4.5	0.6
77CLF-102-01	3/8"	0.37	1.07	2.09	1.76	3.74	-	-	7.2	0.6
77CLF-103-01	1/2"	0.50	1.15	2.25	1.79	3.74	-	-	15.5	0.6
77CLF-104-01	3/4"	0.75	1.32	2.65	2.00	4.88	-	-	35.6	1.1
77CLF-105-01	1"	1.00	1.53	3.07	2.19	4.88	-	-	68.1	1.8
77CLF-106-01	1-1/4"	1.25	2.04	4.08	3.13	7.06	-	-	125.0	4.4
77CLF-107-01	1-1/2"	1.50	2.12	4.23	3.29	7.06	-	-	177.0	4.6
77CLF-108-01	2"	2.00	2.43	4.85	3.83	7.06	-	-	389.0	7.9
77CLF-109-01	2-1/2"	2.50	3.12	6.37	4.51	8.06			503.0	16.2
SOLDER										
77CLF-202-01	3/8"	0.37	1.30	2.21	1.76	3.74	0.41	0.50	7.2	0.6
77CLF-203-01	1/2"	0.50	1.41	2.56	1.76	3.74	0.50	0.63	15.5	0.6
77CLF-204-01	3/4"	0.75	1.64	3.03	2.00	4.88	0.75	0.88	35.6	1.0
77CLF-205-01	1"	1.00	1.92	3.61	2.19	4.88	0.90	1.13	68.1	1.6
77CLF-206-01	1-1/4"	1.25	2.36	4.44	3.13	7.06	0.97	1.38	125.0	3.9
77CLF-207-01	1-1/2"	1.50	2.63	4.89	3.29	7.06	1.09	1.63	177.0	4.3
77CLF-208-01	2"	2.00	3.17	6.06	3.83	7.06	1.34	2.13	389.0	7.6
77CLF-209-01	2-1/2"	2.50	3.77	7.14	4.51	8.06	1.43	2.63	503.0	15.9

*** *Weights based on Standard Configuration*

Apollo Valves, Manufactured by **Conbraco Industries, Inc.**
701 Matthews Mint-Hill Road, Matthews, NC 28105 USA
www.**apollovalves**.com | (704) 841-6000

This specification is provided for reference only. Conbraco Industries Inc. reserves the right to change any portion of this specification without notice and without incurring obligation to make such changes to Conbraco products previously or subsequently sold. Please visit our website @ www.apollovalves.com for the most current information.

AALBERTS INDUSTRIES

RUPERT

PLUMBING AND HEATING

PIPE FABRICATION

TANK VENT

REFERENCE DRAWING 140705-001-PI-03-400002.

MODEL # 4006-CR-6"

Free Vents
Model 4000 & 4100

The Enardo Models 4000 and 4100 are designed to be used on tanks containing non-volatile liquids. Enardo Free Vents offer efficient flow capacity to protect the tank from positive or negative overpressure. They allow vapors to flow freely in and out of the storage tank.

The 4000 and 4100 are designed to protect against rain, dirt, insects and other foreign matter from entering the vent.

Available in aluminum, carbon steel and stainless steel.

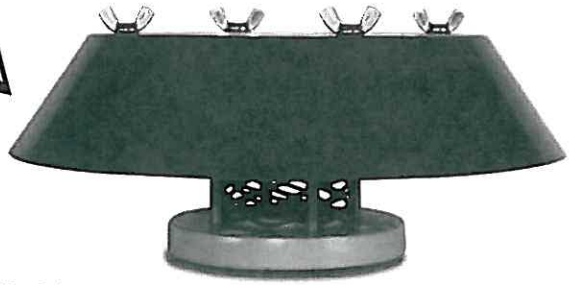

Model 4000

Model 4100

Features and Benefits

- Enardo Free Vents are built of corrrosion resistant materials. A wire mesh screen prevents foreign matter from entering the tank or pipe opening.
- Convient 150 lb. flange connections for quick and easy installation
- As with all Enardo products, every Enardo Free Vent is factory inspected to meet all critical requirements and special needs.
- Rugged forged design provides years of trouble free service life.
- Available in API, ANSI, DIN and JIS flanges.

Vent Flange Sizes

Model Numbers	Sizes Available mm (In.)
Series 4000 & Series 4100	50 (2), 80 (3), 100 (4), 150 (6), 200 (8), 250 (10), and 300 (12)

Materials of Construction

Materials Available
Aluminum, Carbon Steel, 304 Stainless Steel, 316 Stainless Steel, Special

ENARDO Vents

Free Vents
Model 4000 & 4100

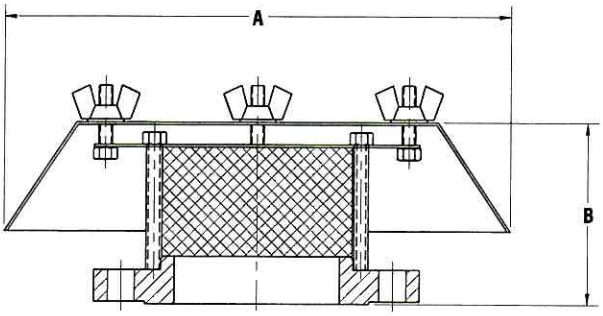

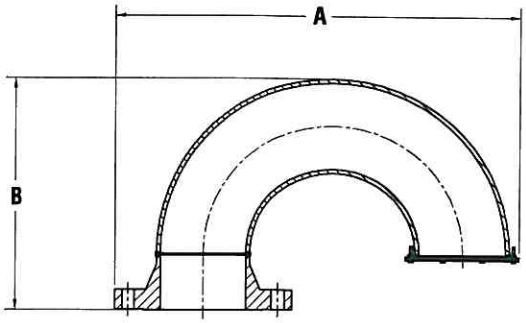

Model 4000 Dimensions and Weights

Model	150 Lb. Flange Size in. (mm)	A Width in. (mm)	B Height in. (mm)	Approx. Ship. Wt. lb. (kg)
4000	2 (50)	9 (228.6)	3-1/4 (82.5)	11 (5)
4000	3 (80)	9 (228.6)	3-1/4 (82.5)	14 (6.4)
4000	4 (100)	16-1/2 (419.1)	5 (127)	18 (8.2)
4000	6 (150)	16-1/2 (419.1)	5 (127)	28 (12.7)
4000	8 (200)	24-1/2 (662.3)	6-9/16 (166.7)	42 (19)
4000	10 (250)	24-1/2 (662.3)	6-9/16 (166.7)	60 (27.3)
4000	12 (300)	24-1/2 (662.3)	6-9/16 (166.7)	95 (43.2)

Larger sizes are available on special order.

Model 4100 Dimensions and Weights

Model	150 Lb. Flange Size in. (mm)	A Width in. (mm)	B Height in. (mm)	Approx. Ship. Wt. lb. (kg)
4100	2 (50)	11 (279.4)	6 (169.9)	8 (3.6)
4100	3 (80)	15-1/4 (387.4)	9 (228.6)	20 (9.1)
4100	4 (100)	19-1/2 (495.3)	11-1/4 (285.8)	35 (15.9)
4100	6 (150)	27-1/2 (698.5)	15-13/16 (401.6)	70 (31.8)
4100	8 (200)	35-3/4 (908.1)	20-5/16 (515.9)	135 (61.4)
4100	10 (250)	44 (1117.6)	24-3/8 (619.1)	235 (106.8)
4100	12 (300)	52-1/2 (1333.5)	27-7/8 (708)	350 (159)

Key to Enardo Series 4100 Free Vent Model Number

□□ □□ — □ □ — □

Series
40 = 4000
41 = 4100

Connection Size
2", 3", 4", 6", 8", 10" and 12" (50, 80, 100, 150, 200, 250, 300 mm)

Material
A. Aluminum
C. Carbon Steel
4. 304 Stainless Steel
6. 316 Stainless Steel
X. Special

Flange Type
F. Flat Face
R. Raised Face

Options
1. Protective Coating
2. Special Features

Example:

4 1 0 4 — C R — 1

Indicates a Free Vent with a 4" ANSI 150 lb. raised face flange connection made with carbon steel materials.

ENARDO • 4470 S. 70th East Ave. • Tulsa, OK 74145-4607 • 1-800-336-2736 U.S. and Canada • **www.enardo.com**

RUPERT

PLUMBING AND HEATING

PIPE FABRICATION

WYE STRAINER

"Y" Strainers

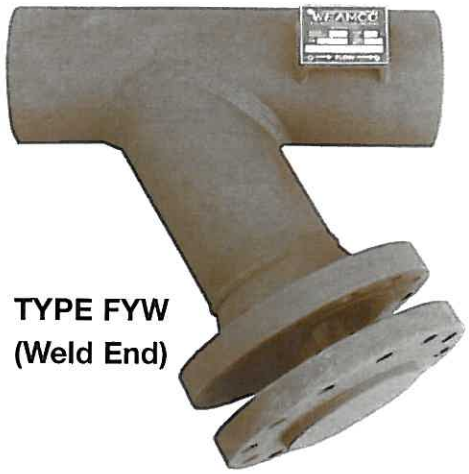

TYPE FYW
(Weld End)

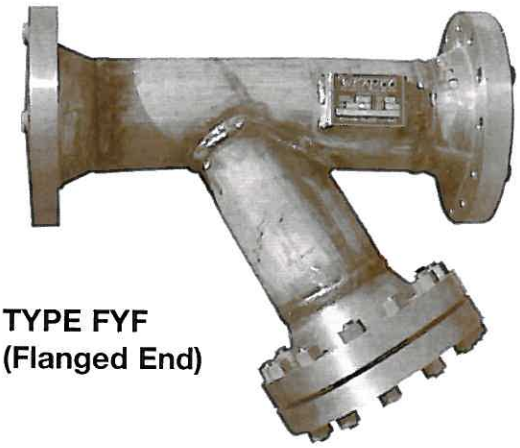

TYPE FYF
(Flanged End)

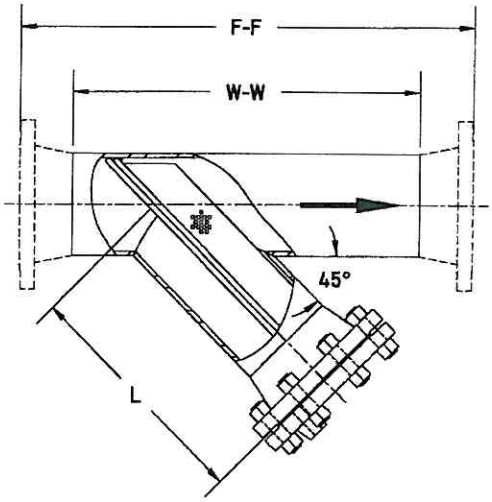

SIZE	O.D.	TYPE FYW W-W	TYPE FYF F-F	L	BLOWDOWN (NPT)
4	4 1/2	18 1/2	26	12	3/4
6	6 5/8	20 1/4	30	16	3/4
8	8 5/8	26	37	20	1
10	10 3/4	33 1/2	46	23	1
12	12 3/4	38 1/4	51	26	1 1/2
14	14	42 1/2	56	29	1 1/2
16	16	47 1/2	62	32	1 1/2
18	18	53	68	36	1 1/2
20	20	57 1/2	73	39	2
24	24	63 1/2	80	43	2

Larger sizes on application

Dimensions are in inches.

WEAMCO "Y" Strainers can be fabricated from any commercially available pipe including carbon steel, low and intermediate alloy steels and stainless steel. The F-F dimensions shown for the Type FYF Strainer is applicable for any flange rating or facing 150# ANSI thru 300# ANSI. Higher pressures on application. Special Dimensions available to match your piping requirements.
Std. Design ASME/ANSI B31.4

INFORMATION REQUIRED

1. Quantity
2. Line Size
3. Weamco type
4. Flange Rating and Face
5. Housing material *
6. Housing Pipe Schedule
7. Basket material *
8. Mesh liner if required
9. Additional Features

*Carbon Steel is standard. Other materials are available.

EXAMPLE: 2 – 6" 300# RF WEAMCO type FYW, C.S. housing,
Std. Wt. 304 SS basket, 1" NPT blowdown, 300# R.F.

Standard Basket – Perforated 1/8" Diameter holes on 3/16" Centers
(Other Patterns, wire mesh and liners available,
see WEAMCO Bulletin AC 112 or Consult Factory)

WEAMCO METRIC
(918) 445-1141
(800) 331-3790
Fax: (918) 445-4617
sales@weamco.com
www.weamco.com

SUBMITTAL REGISTER

CONTRACT NO. 140705

TITLE AND LOCATION: Kirtland Air Force Base Phase IV (Treatment Plant)

CONTRACTOR:

ACTIVITY NO	TRANSMITTAL NO	SPEC SECT	DESCRIPTION ITEM SUBMITTED	PARAGRAPH #	CLASSIFICATION	GOVT OR A/E REVWR	CONTRACTOR: SCHEDULE DATES			CONTRACTOR ACTION			APPROVING AUTHORITY					MAILED TO CONTR/ DATE RCD FRM APPR AUTH	REMARKS
							SUBMIT	APPROVAL NEEDED BY	MATERIAL NEEDED BY	ACTION CODE	DATE OF ACTION	DATE FWD TO APPR AUTH/ DATE RCD FROM CONTR	DATE FWD TO OTHER REVIEWER	DATE RCD FROM OTH REVIEWER	ACTION CODE	DATE OF ACTION		
(a)	(b)	(c)	(d)	(e)	(f)		(g)	(h)	(i)	(j)	(k)	(l)	(m)	(n)	(o)	(p)		(q)	(r)
		33 71 02	Cable Installer Qualifications	1.4.3															
			Certificate of Conformance	1.4.4															
		40 05 13.96	SD-02 Shop Drawings																
			Pressure Piping	1.6															
			SD-03 Product Data																
			Welding Operations	3.1															
			SD-07 Certificates																
			Qualifications	1.5															
		40 05 13	SD-02 Shop Drawings																
			Materials and Equipment	2.1	D														
			BOLT SUBMITTAL																
			Waste Water Disposal	3.18															
			Manufacturer's Field Services	3.19															
			Delivery, Storage and Handling	1.5															
			Materials and Equipment	2.1	D														
			Installation	1.8.2															
			Valve Schedule	2.7.2															
			SD-06 Test Reports																
			Double Containment Piping System	2.5															
			Pipe Leakage Tests	3.16.3															
			Hydrostatic Tests	3.16.1															
			Pneumatic Tests	3.16.2															

RUPERT PLUMBING AND HEATING

PIPE FABRICATION

40 05 13-2.1: Product Data—Additional items

This section contains the following:

- Bolt Submittal—Section 40 05 13 2.2.3.3 specifies Grade B5 bolts for flange to flange connections. We are checking on the acceptability of grade B7 which are more readily available. Please see attached relevant pages from ASTM A193 highlighting the properties of this grade.

TABLE 1 Chemical Requirements (Composition, percent)[A]

Type	Ferritic Steels			
Grade	B5		B6 and B6X	
Description	5% Chromium		12 % Chromium	
UNS Designation			S41000 (410)	
	Range	Product Variation, Over or Under[B]	Range	Product Variation Over or Under[B]
Carbon	0.10 min	0.01 under	0.08–0.15	0.01 over
Manganese, max	1.00	0.03 over	1.00	0.03 over
Phosphorus, max	0.040	0.005 over	0.040	0.005 over
Sulfur, max	0.030	0.005 over	0.030	0.005 over
Silicon	1.00 max	0.05 over	1.00 max	0.05 over
Chromium	4.0–6.0	0.10	11.5–13.5	0.15
Molybdenum	0.40–0.65	0.05	...	...

Type	Ferritic Steels			
Grade	B7, B7M		B16	
Description	Chromium-Molybdenum[C]		Chromium-Molybdenum-Vanadium	
	Range	Product Variation, Over or Under[B]	Range	Product Variation, Over or Under[B]
Carbon	0.37–0.49[D]	0.02	0.36–0.47	0.02
Manganese	0.65–1.10	0.04	0.45–0.70	0.03
Phosphorus, max	0.035	0.005 over	0.035	0.005 over
Sulfur, max	0.040	0.005 over	0.040	0.005 over
Silicon	0.15–0.35	0.02	0.15–0.35	0.02
Chromium	0.75–1.20	0.05	0.80–1.15	0.05
Molybdenum	0.15–0.25	0.02	0.50–0.65	0.03
Vanadium	...	...	0.25–0.35	0.03
Aluminum, max %[E]	...	...	0.015	...

Type	Austenitic Steels,[F] Classes 1, 1A, 1D, and 2†							
Grade	B8, B8A		B8C, B8CA		B8M, B8MA, B8M2, B8M3		B8P, B8PA	
UNS Designation	S30400 (304)		S34700 (347)		S31600 (316)		S30500	
	Range	Product Variation, Over or Under[B]	Range	Product Variation, Over or Under[B]	Range	Product Variation, Over or Under[B]	Range	Product Variation, Over or Under[B]
Carbon, max	0.08	0.01 over	0.08	0.01 over	0.08	0.01 over	0.12	0.01 over
Manganese, max	2.00	0.04 over	2.00	0.04 over	2.00	0.04 over	2.00	0.04 over
Phosphorus, max	0.045	0.010 over	0.045	0.010 over	0.045	0.010 over	0.045	0.010 over
Sulfur, max	0.030	0.005 over	0.030	0.005 over	0.030	0.005 over	0.030	0.005 over
Silicon, max	1.00	0.05 over	1.00	0.05 over	1.00	0.05 over	1.00	0.05 over
Chromium	18.0–20.0	0.20	17.0–19.0	0.20	16.0–18.0	0.20	17.0–19.0	0.20
Nickel	8.0–11.0	0.15	9.0–12.0	0.15	10.0–14.0	0.15	11.0–13.0	0.15
Molybdenum	...	...	...	...	2.00–3.00	0.10	...	...
Columbium + tantalum	...	...	10 x carbon content, min; 1.10 max	0.05 under	...	...	...	...

Type	Austenitic Steels,[F] Classes 1A, 1B, 1D, and 2					
Grade	B8N, B8NA		B8MN, B8MNA		B8MLCuN, B8MLCuNA	
UNS Designation	S30451 (304N)		S31651 (316N)		S31254	
	Range	Product Variation, Over or Under[B]	Range	Product Variation, Over or Under[B]	Range	Product Variation, Over or Under[B]
Carbon, max	0.08	0.01 over	0.08	0.01 over	0.020	0.005 over
Manganese, max	2.00	0.04 over	2.00	0.04 over	1.00	0.03 over
Phosphorus, max	0.045	0.010 over	0.045	0.010 over	0.030	0.005 over
Sulfur, max	0.030	0.005 over	0.030	0.005 over	0.010	0.002 over
Silicon, max	1.00	0.05 over	1.00	0.05 over	0.80	0.05 over
Chromium	18.0–20.0	0.20	16.0–18.0	0.20	19.5–20.5	0.20
Nickel	8.0–11.0	0.15	10.0–13.0	0.15	17.5–18.5	0.15
Molybdenum	...	...	2.00–3.00	0.10	6.0–6.5	0.10
Nitrogen	0.10–0.16	0.01	0.10–0.16	0.01	0.18–0.22	0.02
Copper	...	...	...	...	0.50–1.00	...

Type	Austenitic Steels[F], Classes 1, 1A, and 2	
Grade	B8T, B8TA	
UNS Designation	S32100 (321)	
	Range	Product Variation, Over or Under[B]
Carbon, max	0.08	0.01 over
Manganese, max	2.00	0.04 over
Phosphorus, max	0.045	0.010 over
Sulfur, max	0.030	0.005 over
Silicon, max	1.00	0.05 over

Copyright by ASTM Int'l (all rights reserved). Tue Sep 18 16:50:43 EDT 2012

Downloaded/printed by
Lori Ashley (Copperstate+Bolt++Nut) pursuant to License Agreement. No further reproductions authorized.

TABLE 2 Mechanical Requirements — Inch Products

Grade	Diameter, in.	Minimum Tempering Temperature, °F	Tensile Strength, min, ksi	Yield Strength, min, 0.2 % offset, ksi	Elongation in 4D, min, %	Reduction of Area, min, %	Hardness, max
		Ferritic Steels					
B5 4 to 6 % chromium	up to 4, incl	1100	100	80	16	50	. . .
B6 13 % chromium	up to 4, incl	1100	110	85	15	50	. . .
B6X 13 % chromium	up to 4, incl	1100	90	70	16	50	26 HRC
B7 Chromium-molybdenum	2½ and under	1100	125	105	16	50	321 HBW or 35 HRC
	over 2½ to 4	1100	115	95	16	50	321 HBW or 35 HRC
	over 4 to 7	1100	100	75	18	50	321 HBW or 35 HRC
B7M[A] Chromium-molybdenum	4 and under	1150	100	80	18	50	235 HBW or 99 HRB
	over 4 to 7	1150	100	75	18	50	235 HBW or 99 HRB
B16 Chromium-molybdenum-vanadium	2½ and under	1200	125	105	18	50	321 HBW or 35 HRC
	over 2½ to 4	1200	110	95	17	45	321 HBW or 35 HRC
	over 4 to 8	1200	100	85	16	45	321 HBW or 35 HRC

Grade, Diameter, in.	Heat Treatment[B]	Tensile Strength, min, ksi	Yield Strength, min, 0.2 % offset, ksi	Elongation in 4 D, min %	Reduction of Area, min %	Hardness, max
	Austenitic Steels					
Classes 1 and 1D; B8, B8M, B8P, B8LN, B8MLN, B8CLN, all diameters	carbide solution treated	75	30	30	50	223 HBW or 96 HRB[C]
Class 1: B8C, B8T, all diameters	carbide solution treated	75	30	30	50	223 HBW or 96HRB[C]
Class 1A: B8A, B8CA, B8CLNA, B8MA, B8PA, B8TA, B8LNA, B8MLNA, B8NA, B8MNA, B8MLCuNA, all diameters	carbide solution treated in the finished condition	75	30	30	50	192 HBW or 90 HRB
Classes 1B and 1D: B8N, B8MN, B8MLCuN, all diameters	carbide solution treated	80	35	30	40	223 HBW or 96 HRB[C]
Classes 1C and 1D: B8R, all diameters	carbide solution treated	100	55	35	55	271 HBW or 28 HRC
Class 1C: B8RA, all diameters	carbide solution treated in the finished condition	100	55	35	55	271 HBW or 28 HRC
Classes 1C and 1D: B8S, all diameters	carbide solution treated	95	50	35	55	271 HBW or 28 HRC
Classes 1C: B8SA, all diameters	carbide solution treated in the finished condition	95	50	35	55	271 HBW or 28 HRC
Class 2: B8, B8C, B8P, B8T, B8N,[D] ¾ and under	carbide solution treated and strain hardened	125	100	12	35	321 HBW or 35 HRC
over ¾ to 1, incl		115	80	15	35	321 HBW or 35 HRC
over 1 to 1¼, incl		105	65	20	35	321 HBW or 35 HRC
over 1¼ to 1½, incl		100	50	28	45	321 HBW or 35 HRC
Class 2: B8M, B8MN, B8MLCuN[D] ¾ and under	carbide solution treated and strain hardened	110	95	15	45	321 HBW or 35 HRC
over ¾ to 1 incl		100	80	20	45	321 HBW or 35 HRC
Over 1 to 1¼, incl		95	65	25	45	321 HBW or 35 HRC

Copyright by ASTM Int'l (all rights reserved). Tue Sep 18 16:50:43 EDT 2012
Downloaded/printed by
Lori Ashley (Copperstate+Bolt+Nut) pursuant to License Agreement. No further reproductions authorized.

TRANSMITTAL DOCUMENT

Date:	**9-9-16**	**From:**	**Ed Butler**
To:	**EA Engineering, Science, and Technology, Inc., 320 Gold Ave. SW, Suite 1300 Albuquerque, NM 87102 Devon Jercinovic**	**Job Name:**	**Kirtland AFB, NM Bulk Fuels Facility**
		Reference:	
		Transmittal Method:	**E-mail**
		Sent By:	**Ed Butler**

Submittal	Specification Section	Item Description
7	40 05 13	Pipe Drawings

Ed Butler
TECHSAS, Inc.
4819 West Bayshore Drive
Bacliff, TX 77518

"I hereby certify that the (equipment) (material) (article) shown and marked in this submittal is that proposed to be incorporated with the Contract, is in compliance with the contract drawings and specification, can be installed in the allocated spaces, and is submitted for Contractor approval.

Certified by _____.
(Signature when applicable) Date: _____.

Kirtland Air Force Base
Albuquerque, New Mexico

Project: Bulk Fuels Facility

Pipe Shop Drawings (Submittal 7)

Owner:	**Kirtland Air Force Base** **US Army Corps of Engineers**
Owner's Agent:	**EA Engineering, Science, and Technology, Inc.,** **320 Gold Ave. SW, Suite 1300** **Albuquerque, NM 87102**
Engineer:	**EA Engineering, Science, and Technology, Inc.,** **320 Gold Ave. SW, Suite 1300** **Albuquerque, NM 87102**
General Contractor:	**TECHSAS, Inc.** **4819 West Bayshore Drive** **Bacliff, TX 77518**
Construction Management:	**Tasman Geosciences** **6899 Pecos Street** **Unit C** **Denver, CO 80221**

TABLE OF CONTENTS

Description:

- **Shop Drawings – Rupert Plumbing and Heating**

RUPERT

PLUMBING AND HEATING

PIPE FABRICATION

Section 40 05 13

PRELIMINARY SHOP DRAWINGS

- TO BE REVISED AFTER EQUIPMENT IS SET

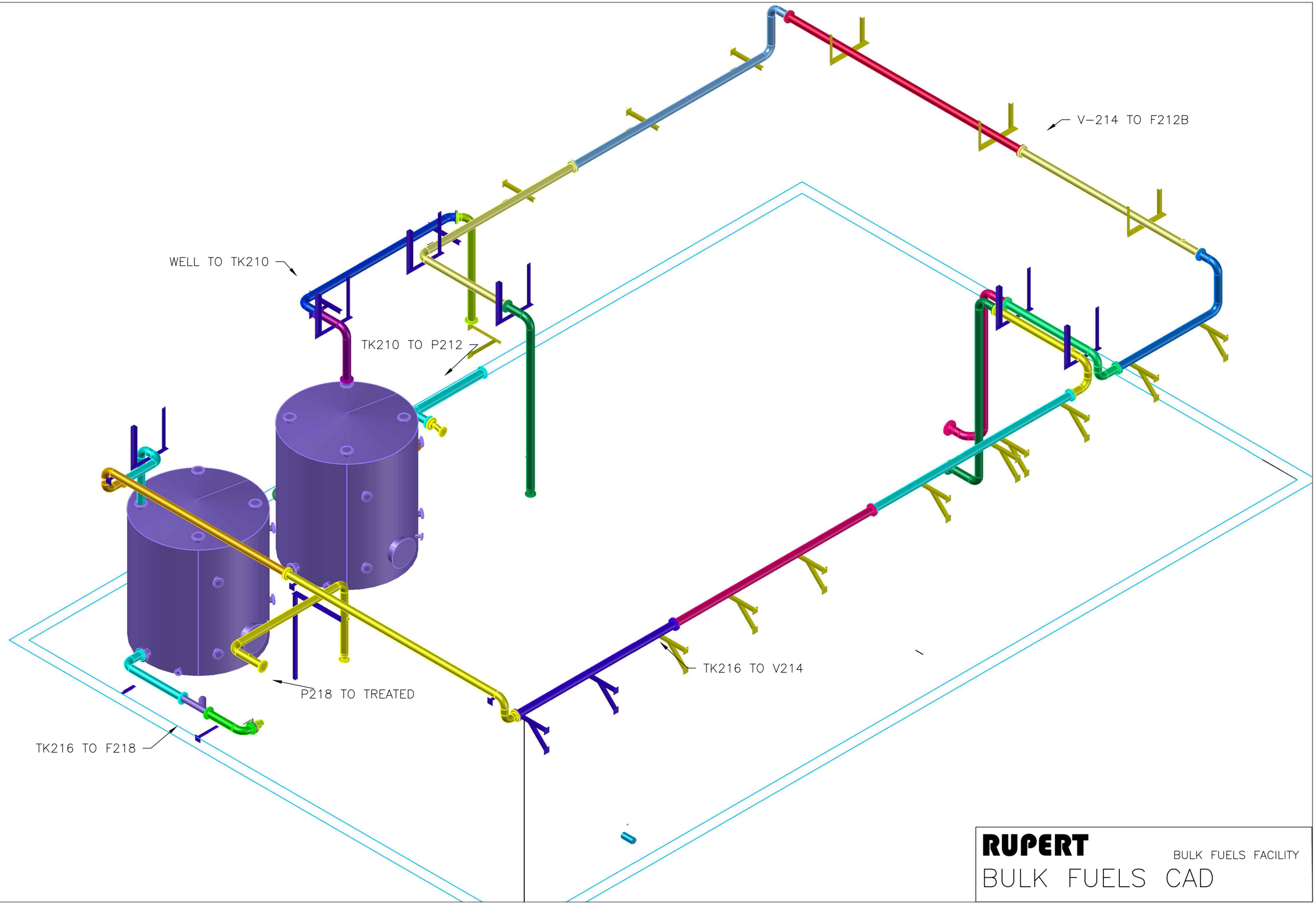

RUPERT BULK FUELS FACILITY

BULK FUELS CAD

N

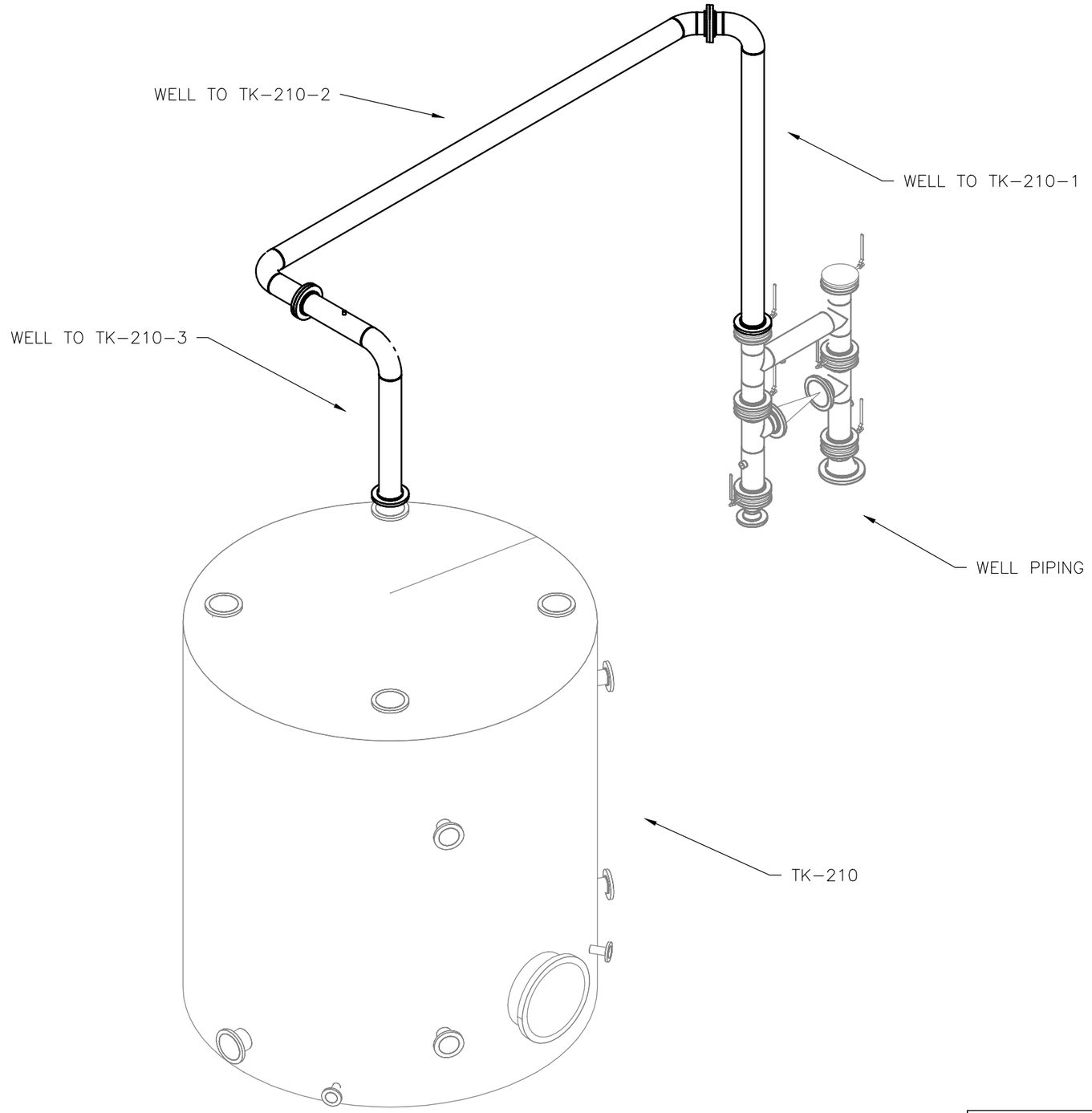

RUPERT	BULK FUELS FACILITY
	DATE:5/19/2016
WELL TO TK-210-COMBINED	

FACING NORTH

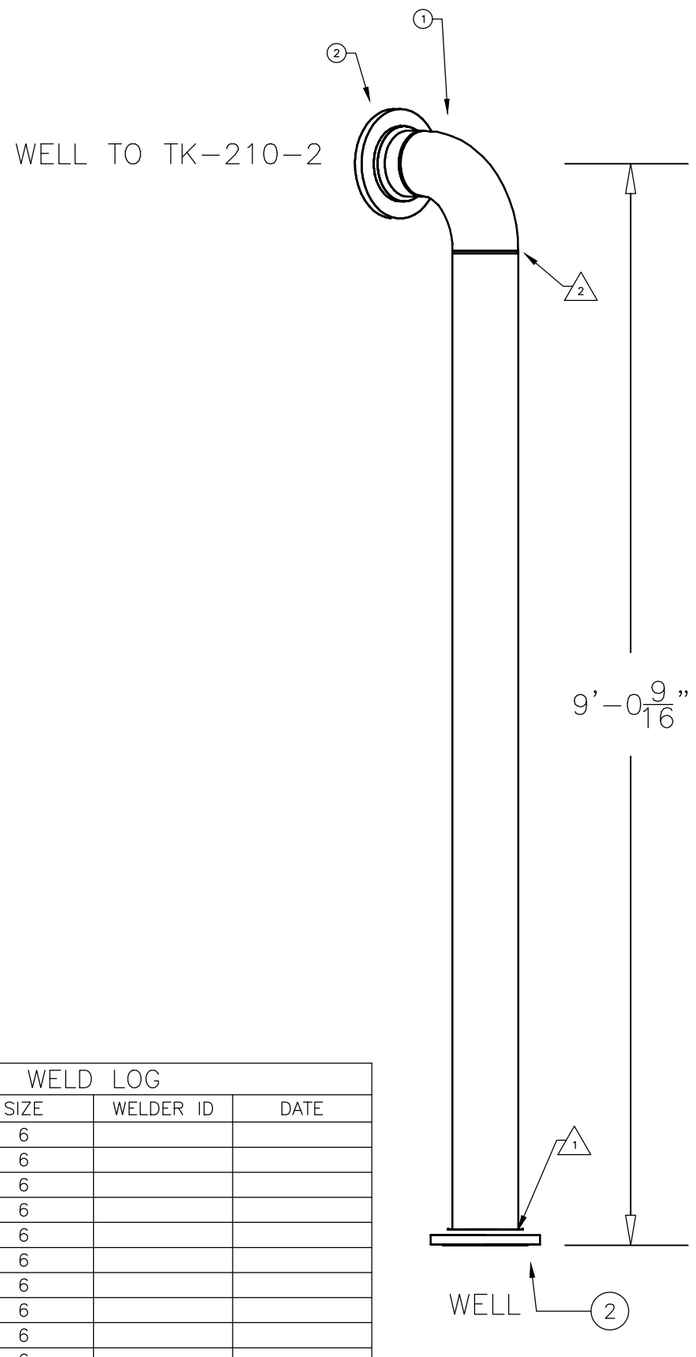

TOP VIEW

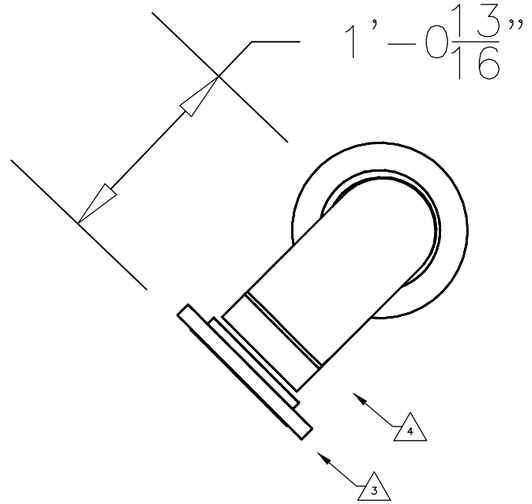

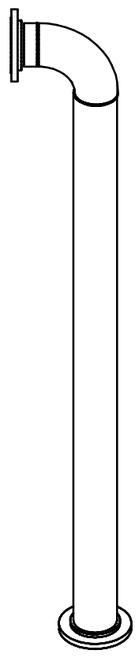

WELD LOG			
WELD #	SIZE	WELDER ID	DATE
1	6		
2	6		
3	6		
4	6		
5	6		
6	6		
7	6		
8	6		
9	6		
10	6		

BILL OF MATERIAL		
ITEM	QUANTITY	DESCRIPTION
1	1	6" 90 ELL
2	2	6" FLANGE
3		
4		
5		

RUPERT

BULK FUELS FACILITY

DATE:5/19/2016

WELL TO TK-210-1

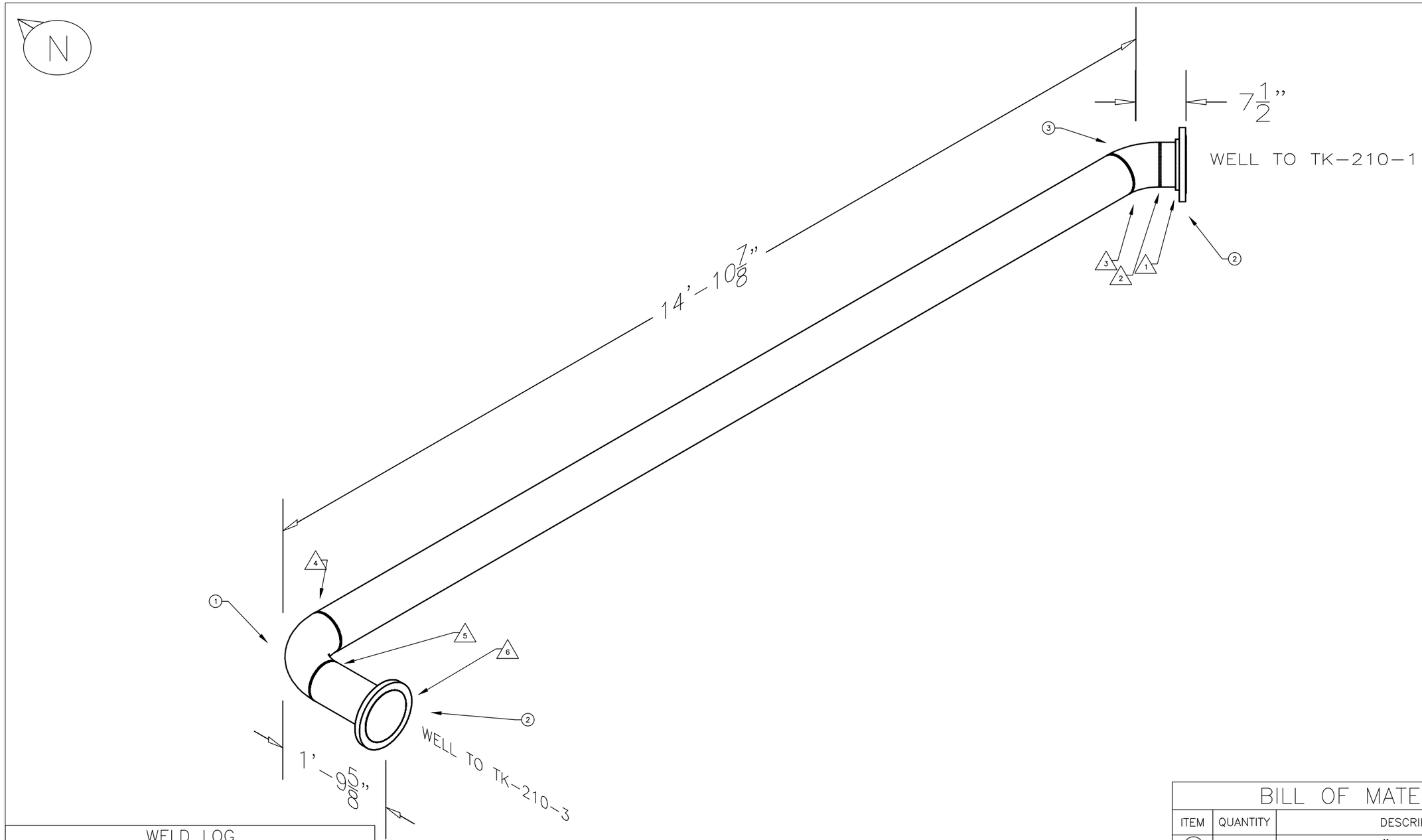

WELD LOG			
WELD #	SIZE	WELDER ID	DATE
1	6		
2	6		
3	6		
4	6		
5	6		
6	6		
7	6		
8	6		
9	6		
10	6		

BILL OF MATERIAL		
ITEM	QUANTITY	DESCRIPTION
1	1	6" 90 ELL
2	2	6" FLANGE
3	1	6" 45 ELL
4		
5		

RUPERT

BULK FUELS FACILITY

DATE:5/19/2016

WELL TO TK-210-2

N

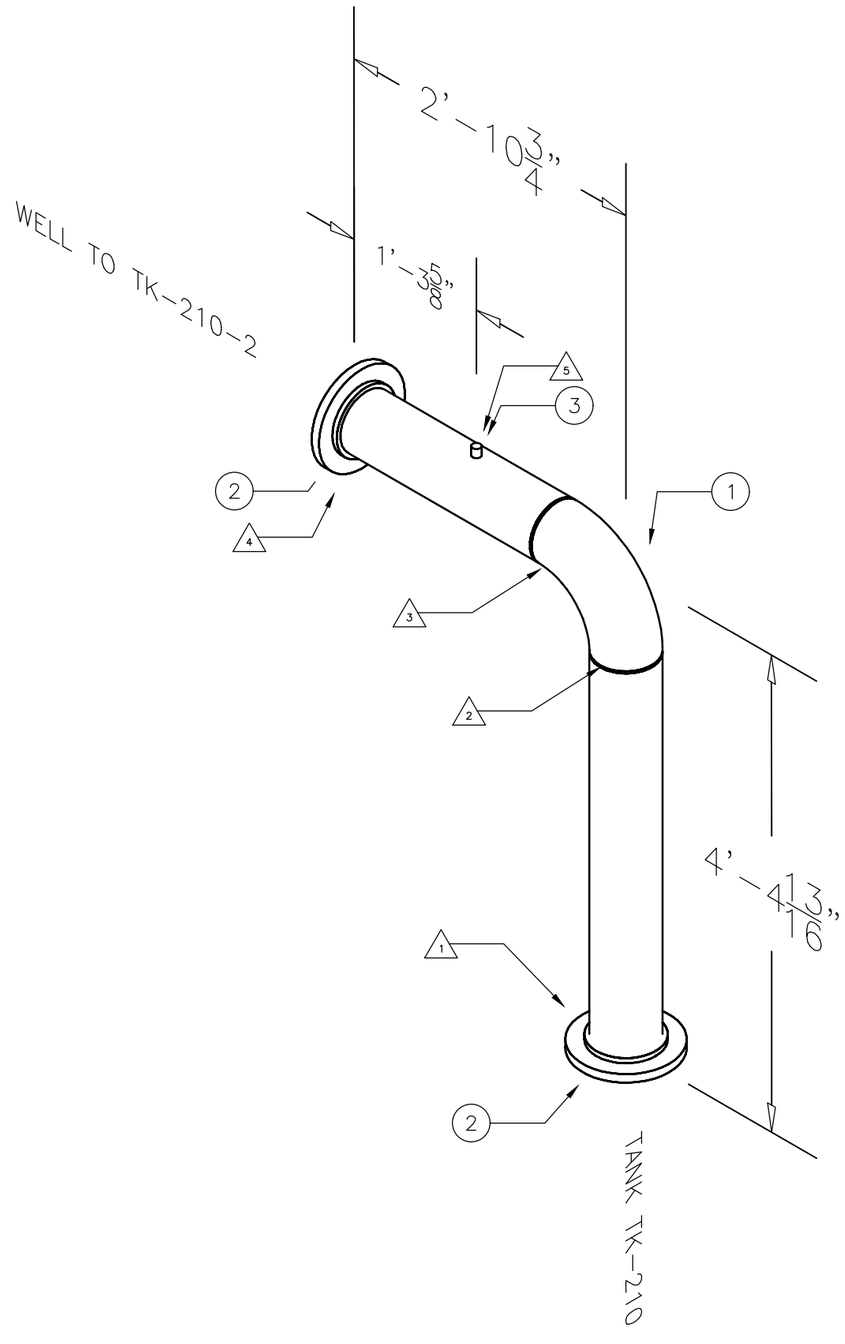

WELD LOG			
WELD #	SIZE	WELDER ID	DATE
1	6		
2	6		
3	6		
4	6		
5	6		
6	6		
7	6		
8	6		
9	6		
10	6		

BILL OF MATERIAL		
ITEM	QUANTITY	DESCRIPTION
1	1	6" 90 ELL
2	2	6" FLANGE
3	1	1" THREAD O LET
4		
5		

RUPERT

BULK FUELS FACILITY

DATE:5/19/2016

WELL TO TK-210-3

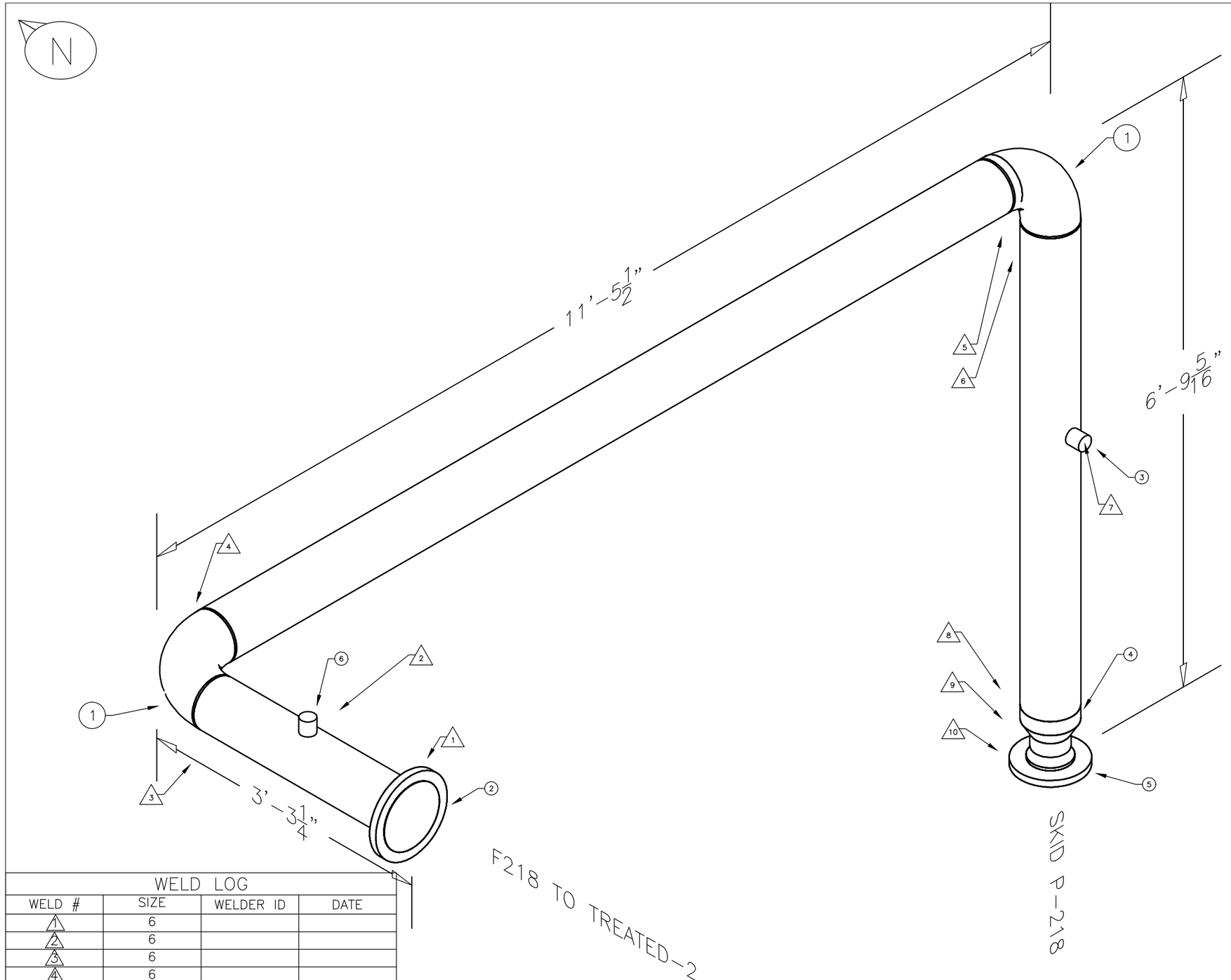

WELD LOG			
WELD #	SIZE	WELDER ID	DATE
1	6		
2	6		
3	6		
4	6		
5	6		
6	1		
7	1/2		
8	6		
9	6		
10	6		

BILL OF MATERIAL		
ITEM	QUANTITY	DESCRIPTION
1	2	6" 90 ELL
2	1	6" FLANGE
3	1	1/2" THREAD O LET
4	1	6 X 4 REDUCER
5	1	4" FLANGE
6	1	1" THREAD O LET

RUPERT

BULK FUELS FACILITY

DATE:5/19/2016

P218 TO TREATED-1

N

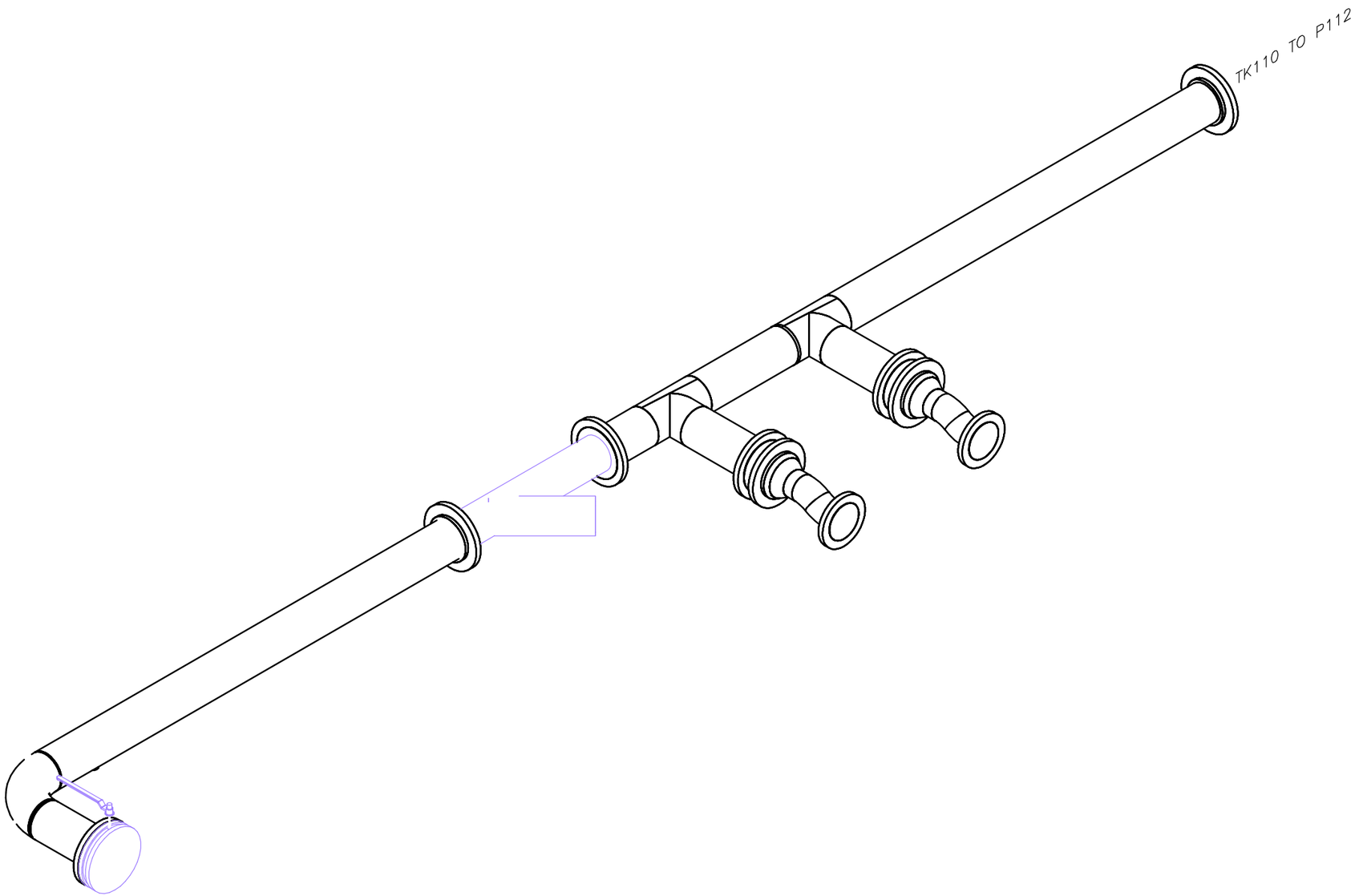

RUPERT	BULK FUELS FACILITY
	DATE:5/19/2016
TK210 TO P212 COMBINED	

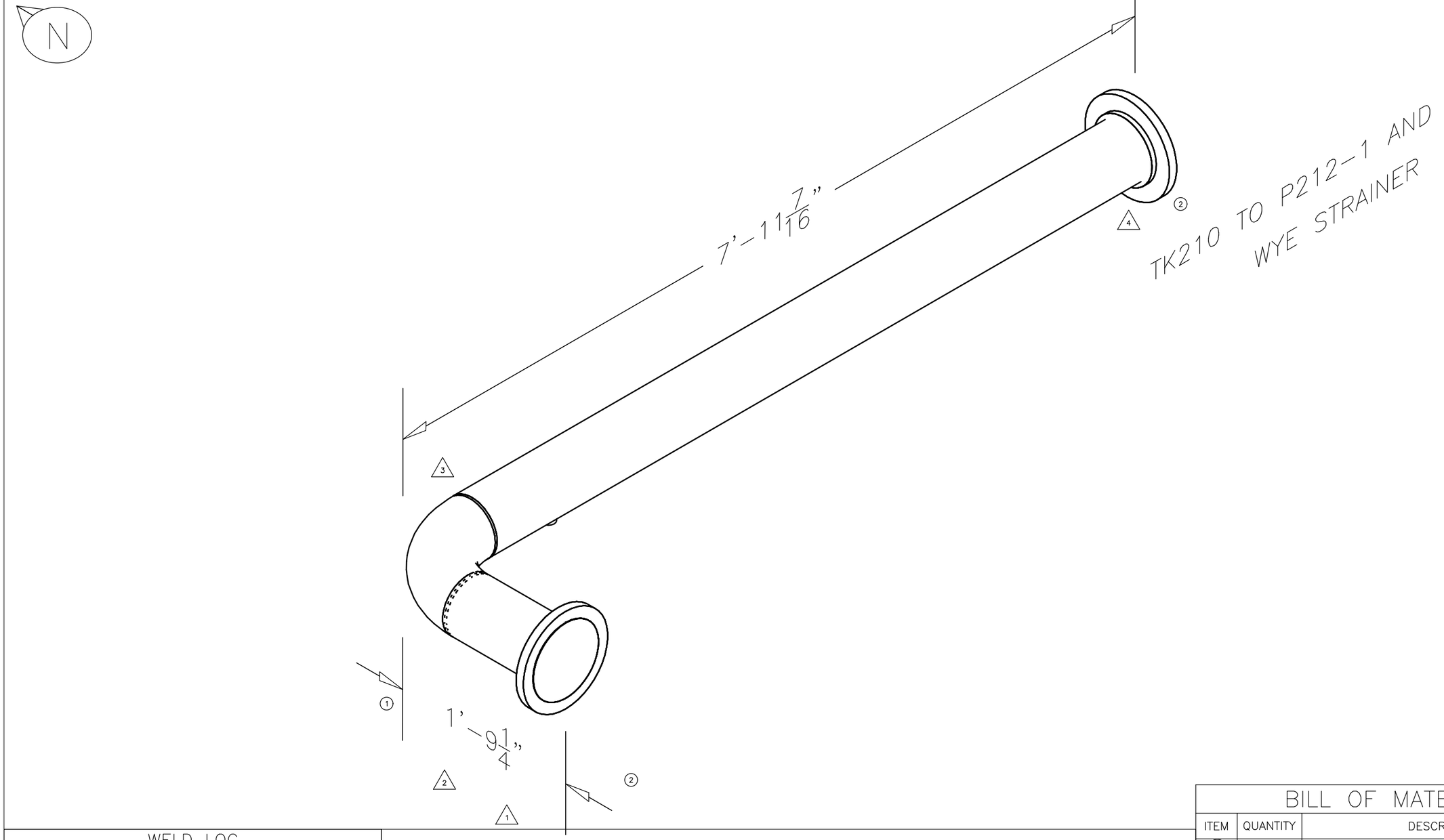

WELD LOG			
WELD #	SIZE	WELDER ID	DATE
1	6		
2	6		
3	6		
4	6		
5	1		
6			
7			
8			
9			
10			

BILL OF MATERIAL		
ITEM	QUANTITY	DESCRIPTION
1	1	6" 90 ELL
2	2	6" FLANGE
3	1	1" THREAD O LET
4		
5		

RUPERT

BULK FUELS FACILITY

DATE:5/19/2016

TK210 TO P212-4

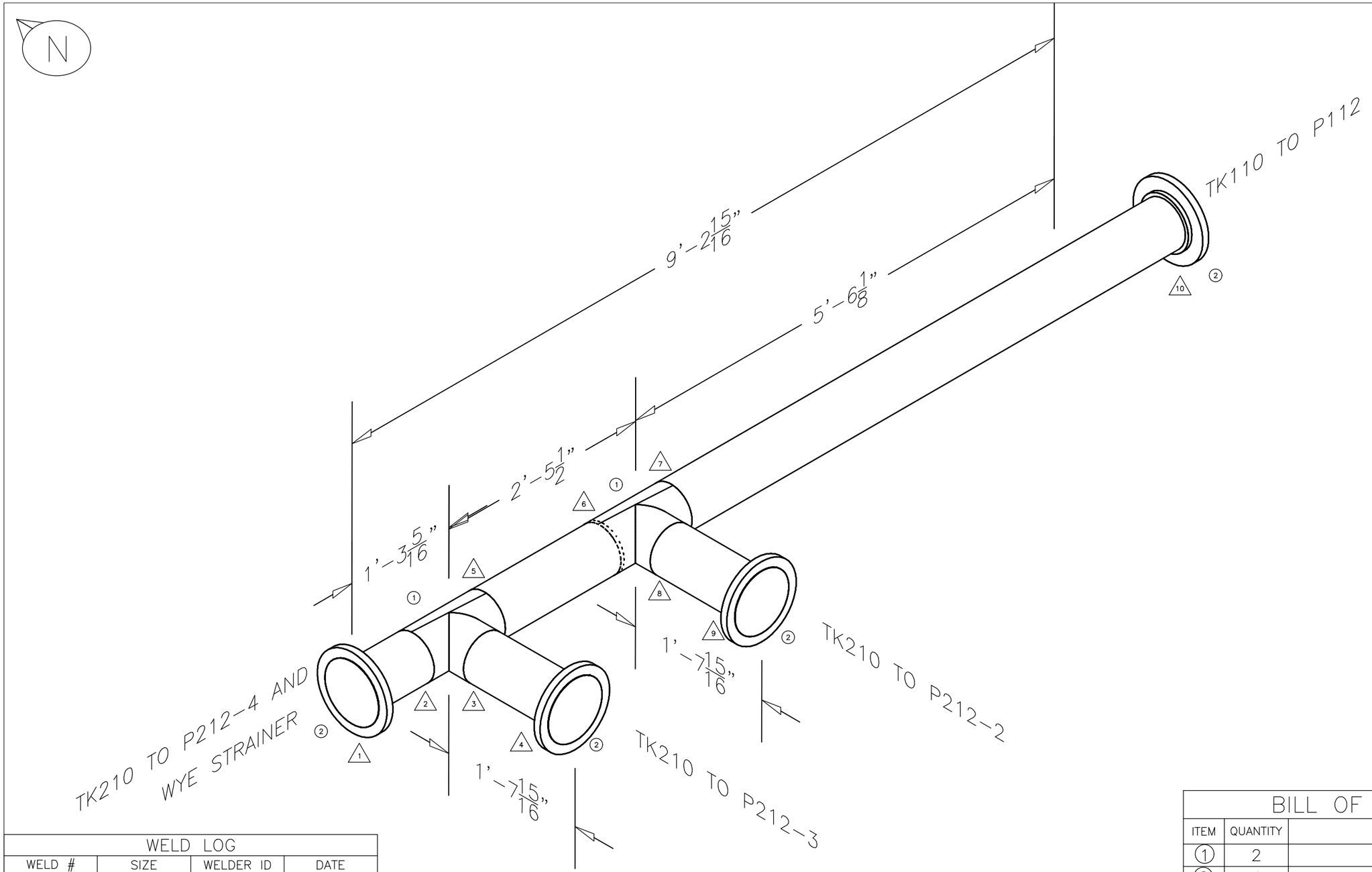

WELD LOG			
WELD #	SIZE	WELDER ID	DATE
1	6		
2	6		
3	6		
4	6		
5	6		
6	6		
7	6		
8	6		
9	6		
10	6		

BILL OF MATERIAL		
ITEM	QUANTITY	DESCRIPTION
①	2	6" TEE
②	4	6" FLANGE
③		
④		
⑤		

RUPERT

BULK FUELS FACILITY

DATE:5/19/2016

TK210 TO P212-1

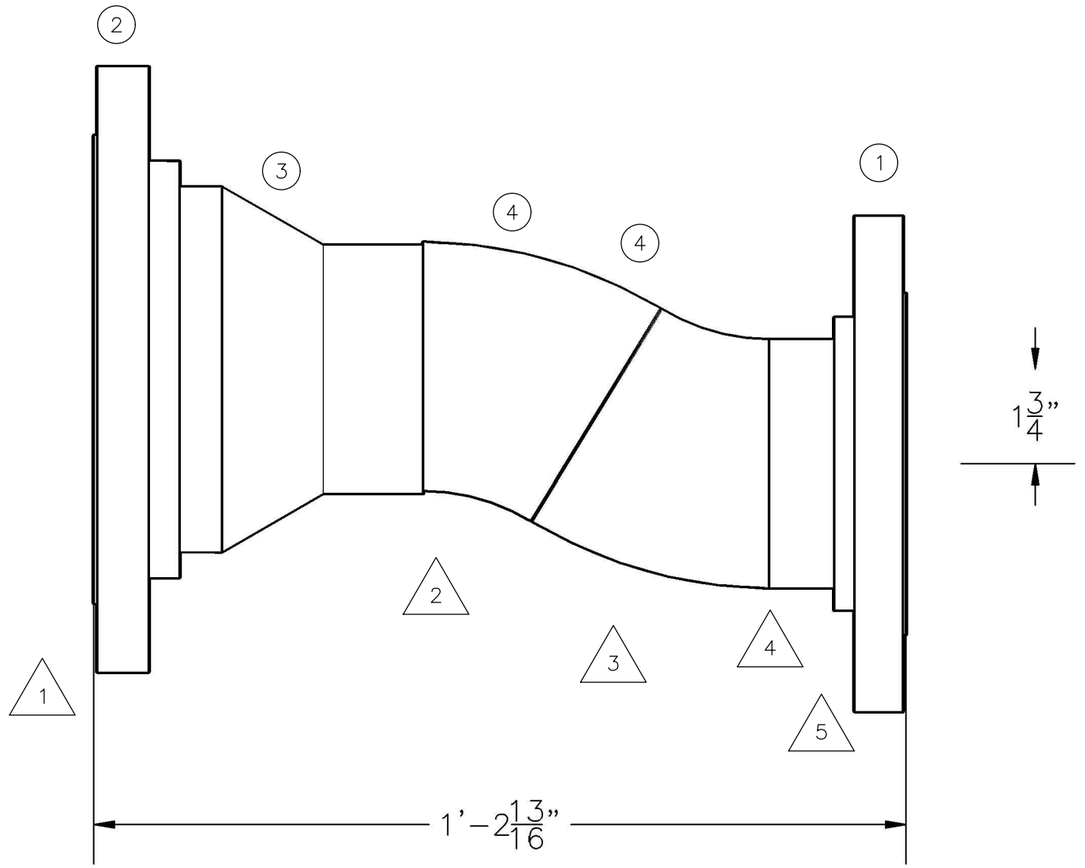

WELD LOG			
WELD #	SIZE	WELDER ID	DATE
1	6		
2	4		
3	4		
4	4		
5	4		
6			
7			
8			
9			
10			

BILL OF MATERIAL		
ITEM	QUANTITY	DESCRIPTION
1	1	4" FLANGE
2	4	6" FLANGE
3	1	6 X 4 REDUCER
4	2	MITERED 45 ELL
5		

RUPERT

BULK FUELS FACILITY

DATE:5/19/2016

TK210 TO P212-2

N

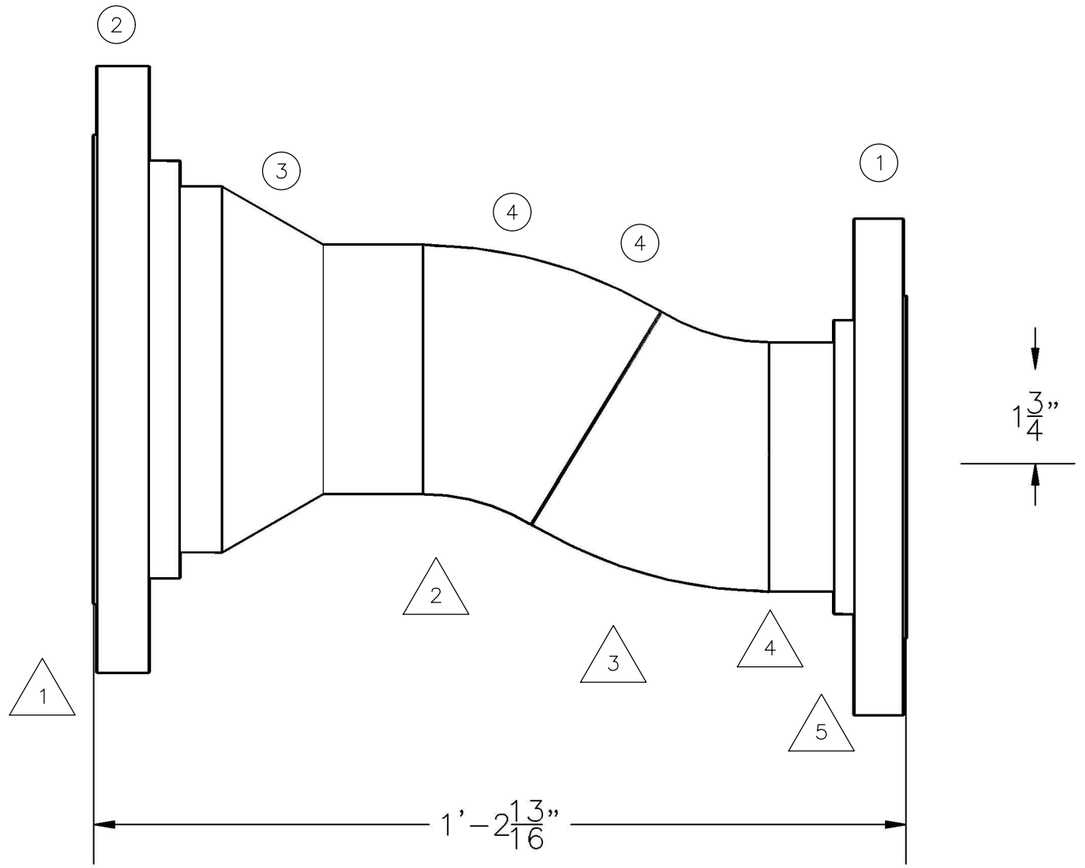

WELD LOG			
WELD #	SIZE	WELDER ID	DATE
1	6		
2	4		
3	4		
4	4		
5	4		
6			
7			
8			
9			
10			

BILL OF MATERIAL		
ITEM	QUANTITY	DESCRIPTION
1	1	4" FLANGE
2	4	6" FLANGE
3	1	6 X 4 REDUCER
4	2	MITERED 45 ELL
5		

RUPERT

BULK FUELS FACILITY

DATE:5/19/2016

TK210 TO P212-3

N

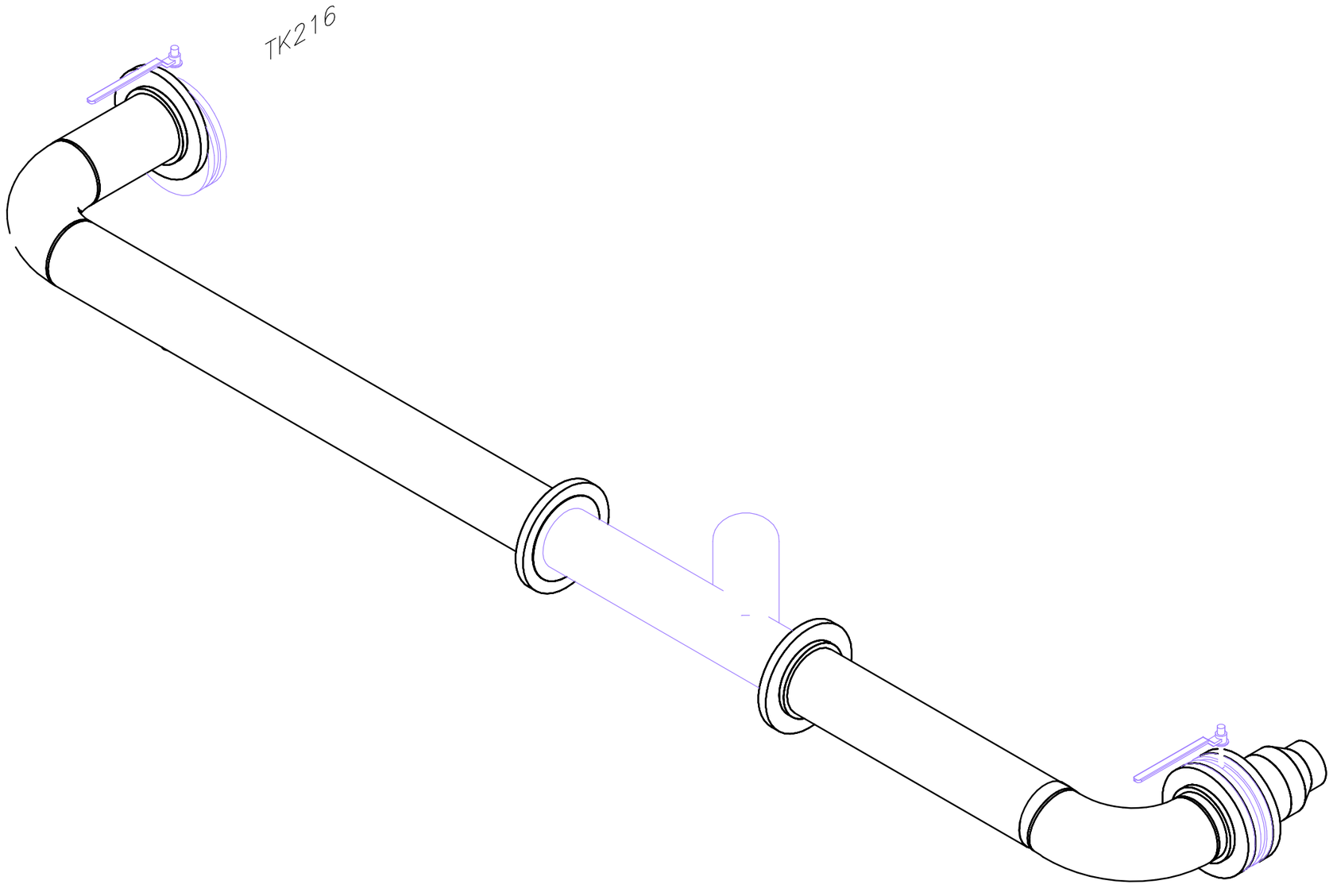

RUPERT	BULK FUELS FACILITY
	DATE:5/19/2016

TK216 TO F218 COMBINED

N

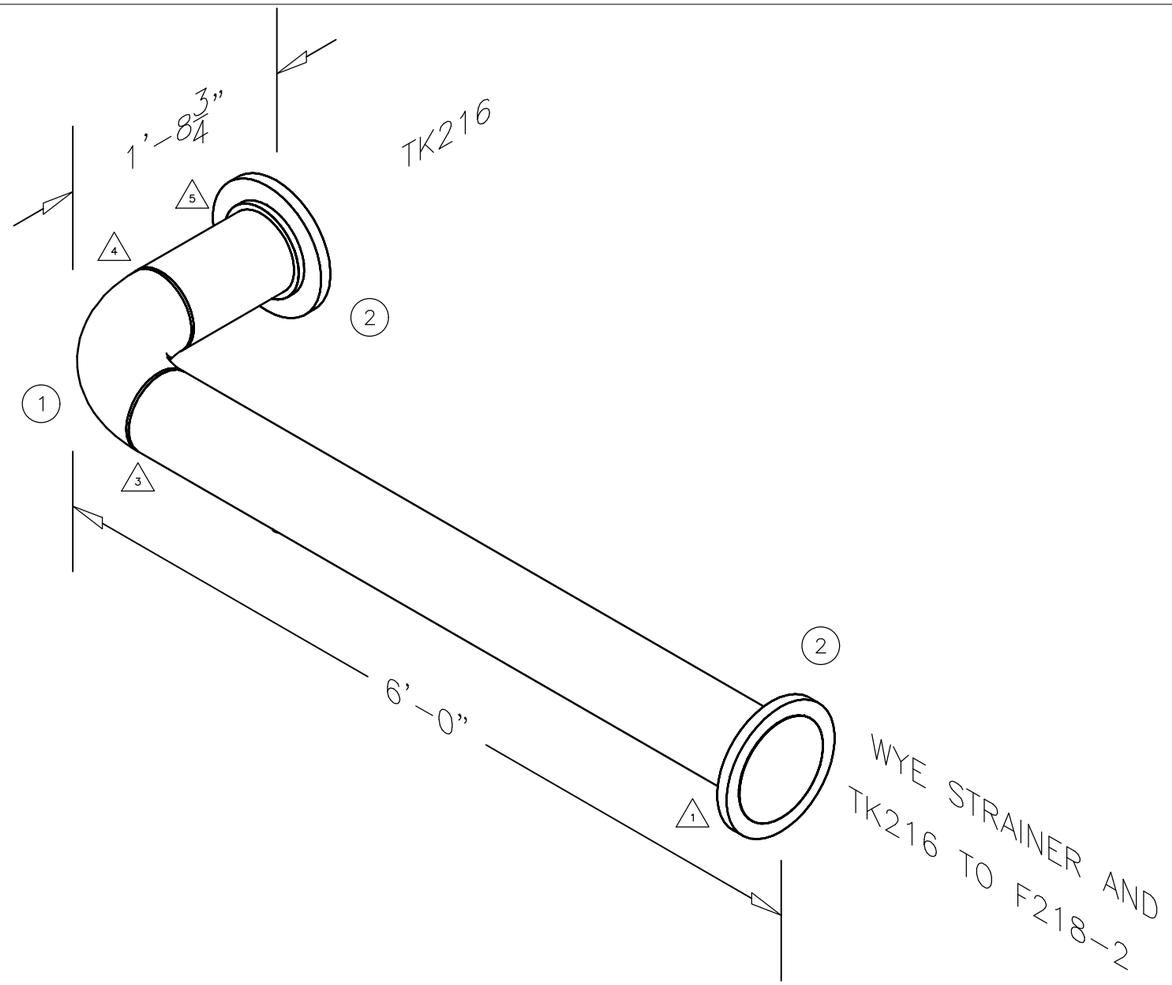

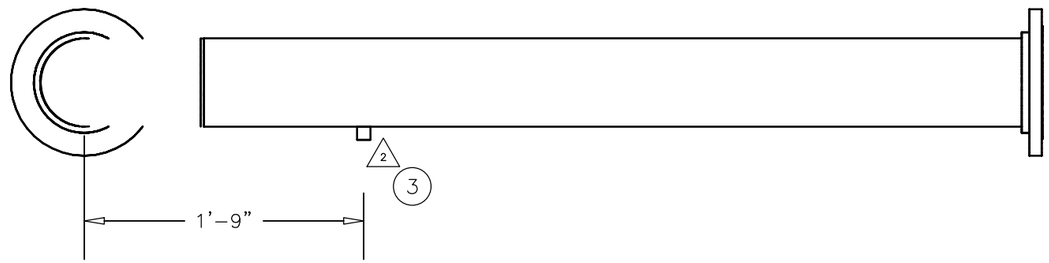

WELD LOG			
WELD #	SIZE	WELDER ID	DATE
1	6		
2	1		
3	6		
4	6		
5	6		
6			
7			
8			
9			
10			

BILL OF MATERIAL		
ITEM	QUANTITY	DESCRIPTION
1	1	6" 90 ELL
2	2	6" FLANGE
3	1	1" THREAD O LET
4		
5		

RUPERT

BULK FUELS FACILITY

DATE:5/19/2016

TK216 TO F218-1

N

WYE STRAINER AND
TK216 TO F218-1

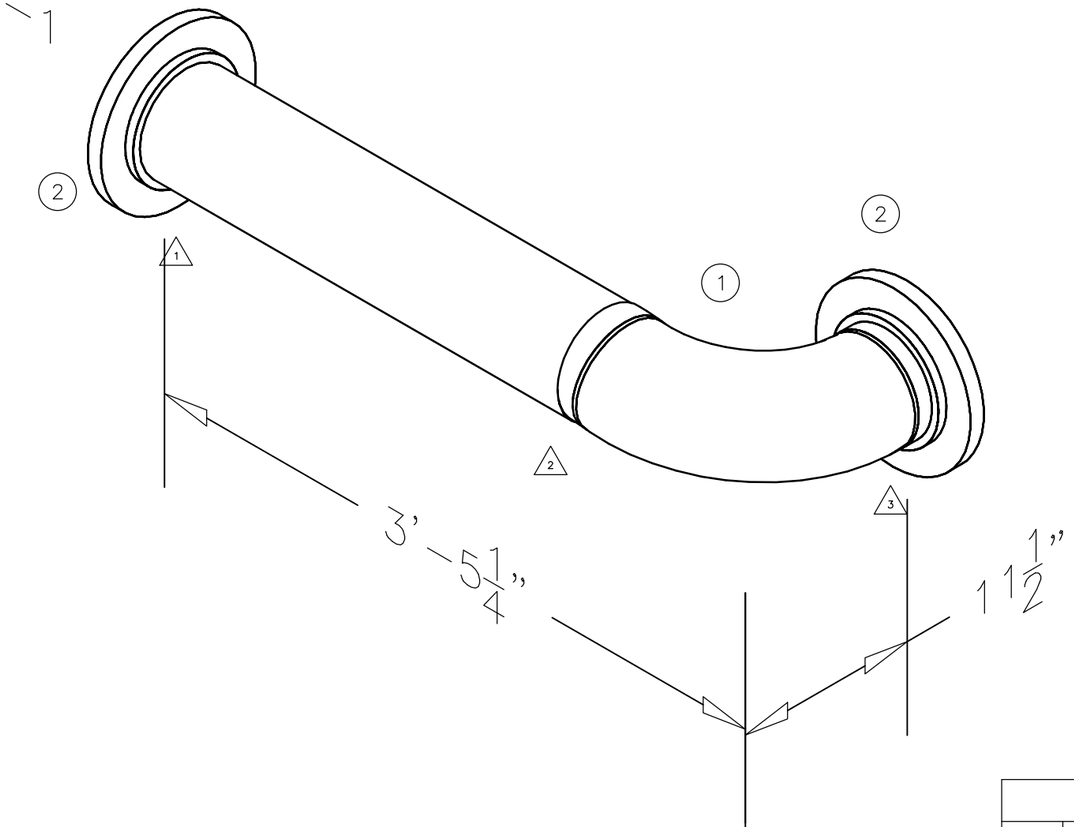

WELD LOG			
WELD #	SIZE	WELDER ID	DATE
1	6		
2	6		
3	6		
4	6		
5			
6			
7			
8			
9			
10			

BILL OF MATERIAL		
ITEM	QUANTITY	DESCRIPTION
1	1	6" 90 ELL
2	2	6" FLANGE
3		
4		
5		

RUPERT

BULK FUELS FACILITY

DATE:5/19/2016

TK216 TO F218-2

N

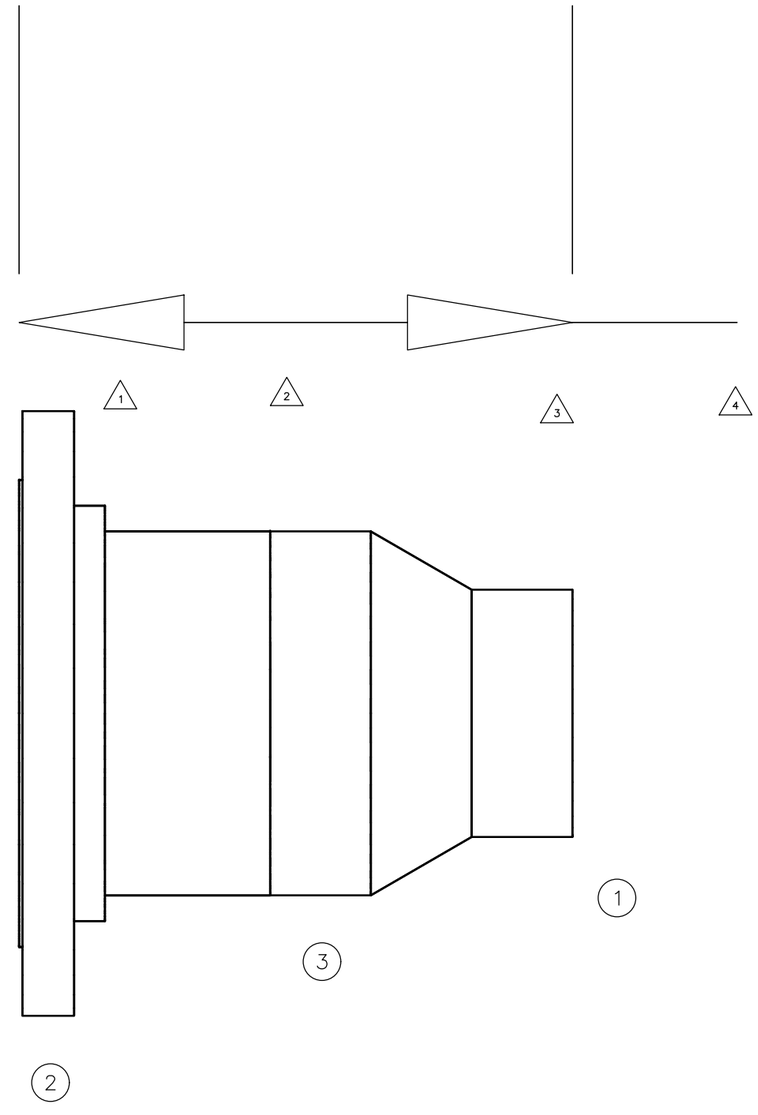

$10\frac{1}{16}''$

WELD LOG			
WELD #	SIZE	WELDER ID	DATE
1	6		
2	6		
3	4		
4	4		
5			
6			
7			
8			
9			
10			

BILL OF MATERIAL		
ITEM	QUANTITY	DESCRIPTION
1	1	4" FLANGE
2	1	6" FLANGE
3	1	6 X 4 RED
4		
5		

RUPERT

BULK FUELS FACILITY

DATE:5/19/2016

TK216 TO F218-3

N

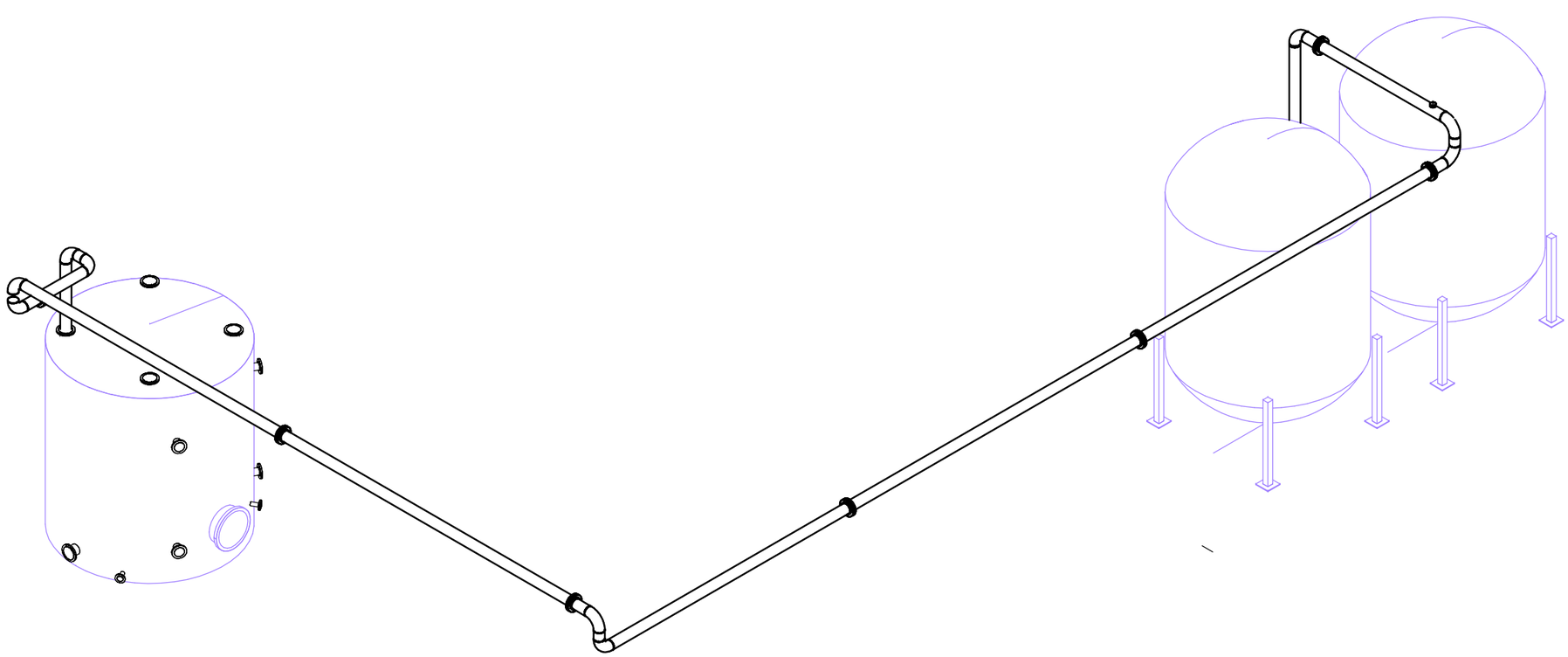

RUPERT

BULK FUELS FACILITY

DATE:5/19/2016

TK216 TO V214 COMBINED

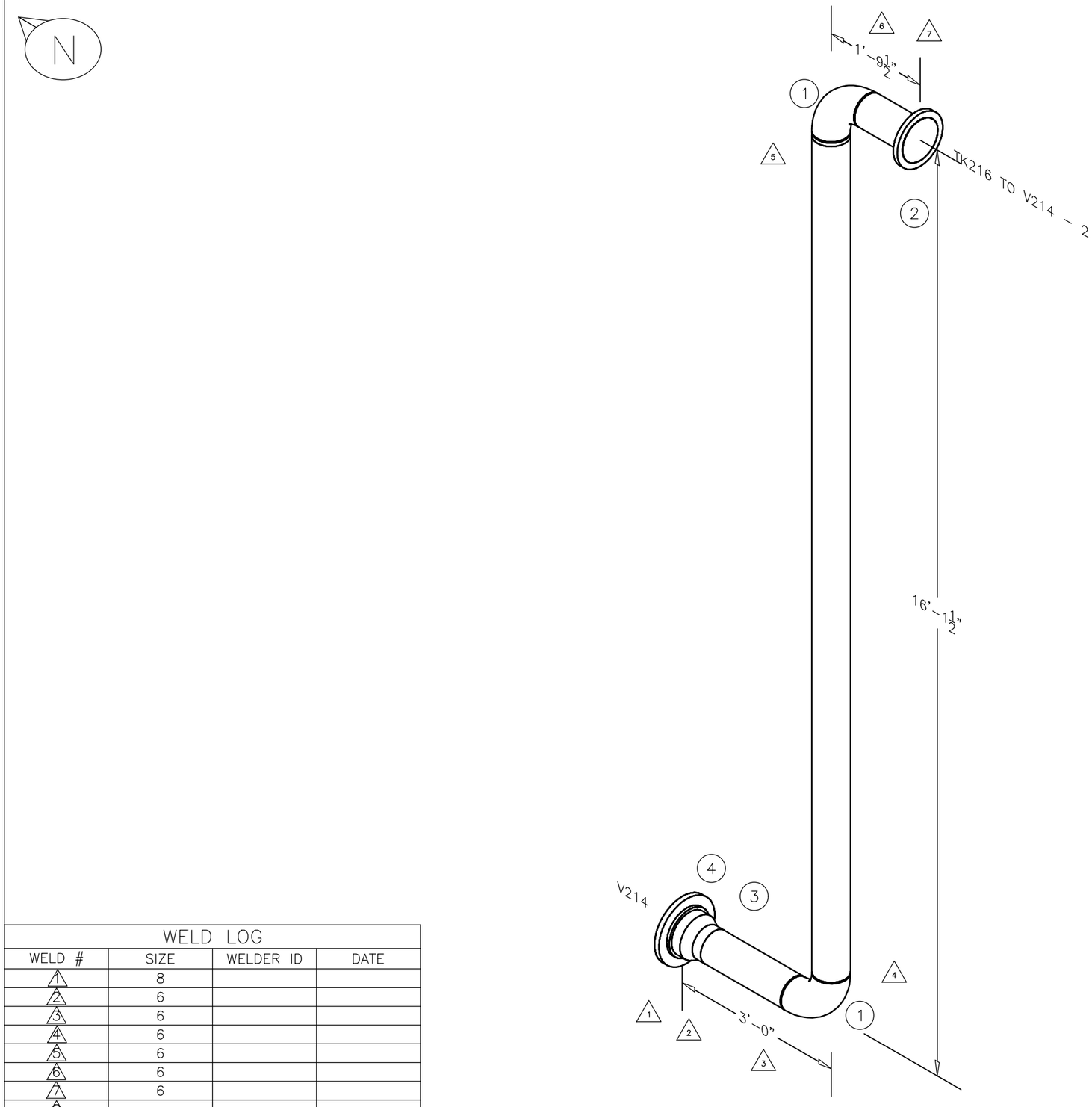

WELD LOG			
WELD #	SIZE	WELDER ID	DATE
1	8		
2	6		
3	6		
4	6		
5	6		
6	6		
7	6		
8			
9			
10			

BILL OF MATERIAL		
ITEM	QUANTITY	DESCRIPTION
1	2	6" 90 ELL
2	1	6" FLANGE
3	1	8 x 6 RED
4	1	8" FLANGE
5		

RUPERT

BULK FUELS FACILITY

DATE:5/19/2016

TK216 TO V214-1

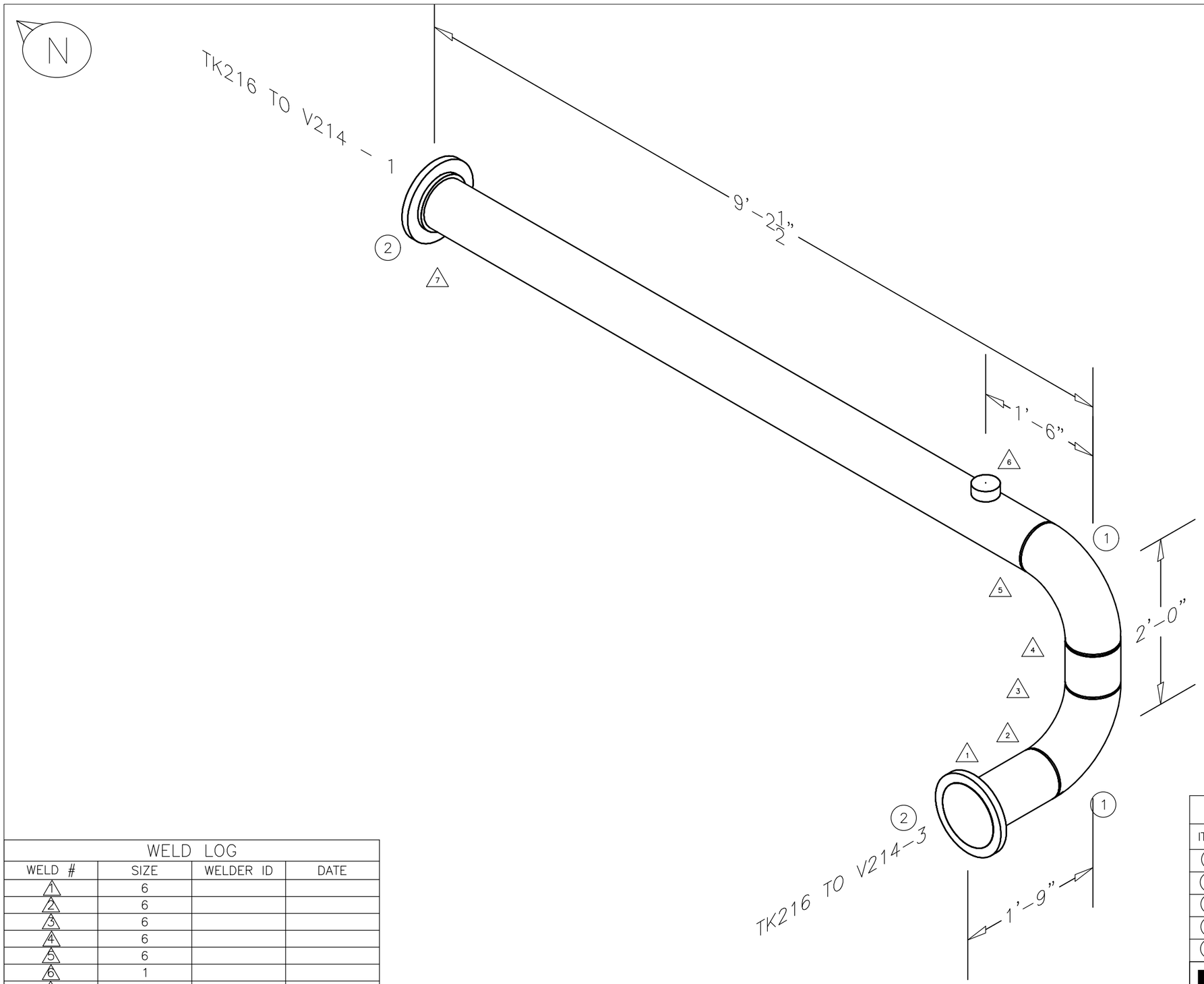

WELD LOG			
WELD #	SIZE	WELDER ID	DATE
1	6		
2	6		
3	6		
4	6		
5	6		
6	1		
7	6		
8			
9			
10			

BILL OF MATERIAL		
ITEM	QUANTITY	DESCRIPTION
1	2	6” 90 ELL
2	2	6” FLANGE
3	1	1” THREAD O LET
4		
5		

RUPERT

BULK FUELS FACILITY

DATE:5/19/2016

TK216 TO V214–2

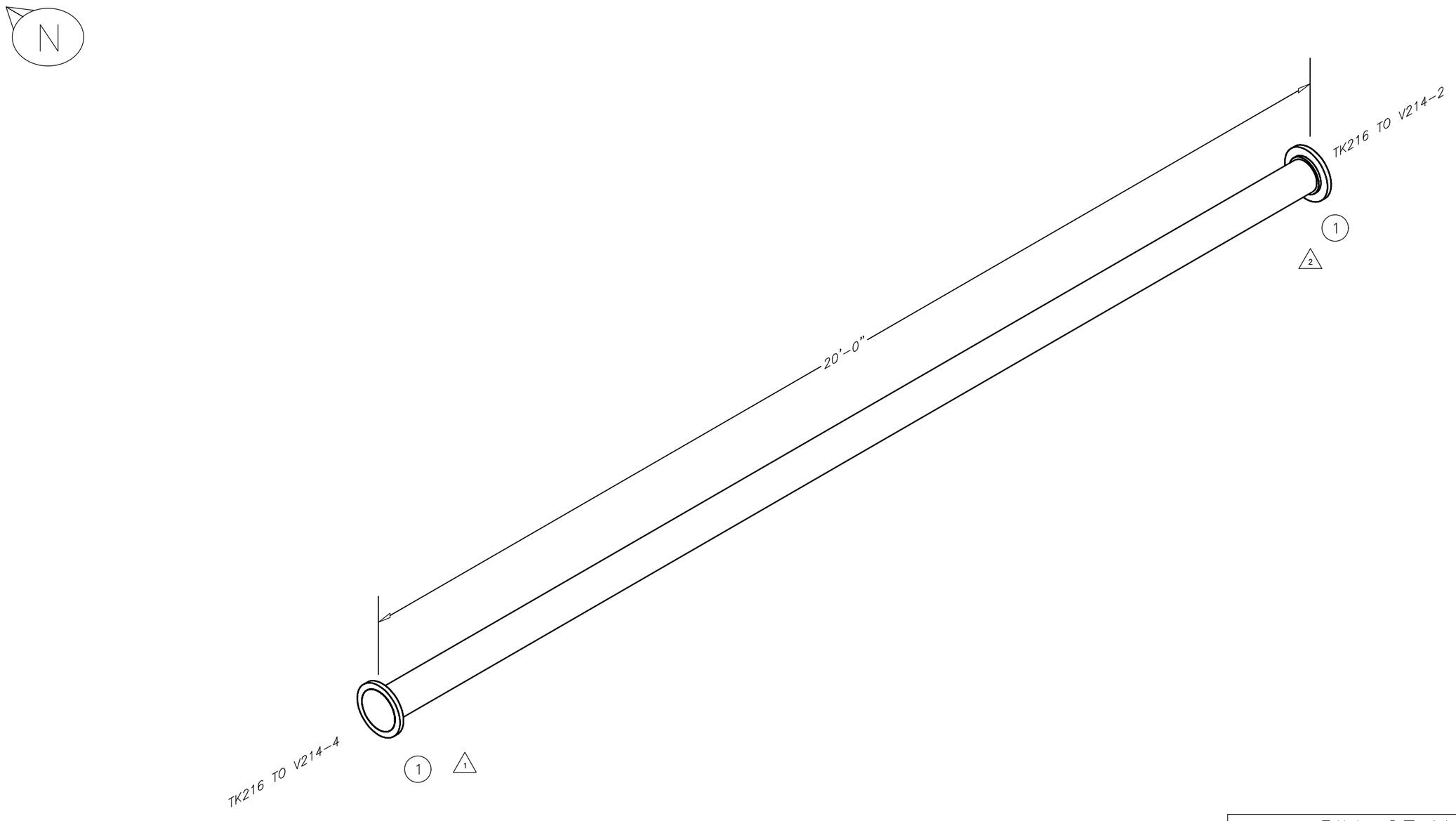

WELD LOG			
WELD #	SIZE	WELDER ID	DATE
1	6		
2	6		
3			
4			
5			
6			
7			
8			
9			
10			

BILL OF MATERIAL		
ITEM	QUANTITY	DESCRIPTION
1	2	6" FLANGE
2		
3		
4		
5		

RUPERT

BULK FUELS FACILITY

DATE:5/19/2016

TK216 TO V214-3

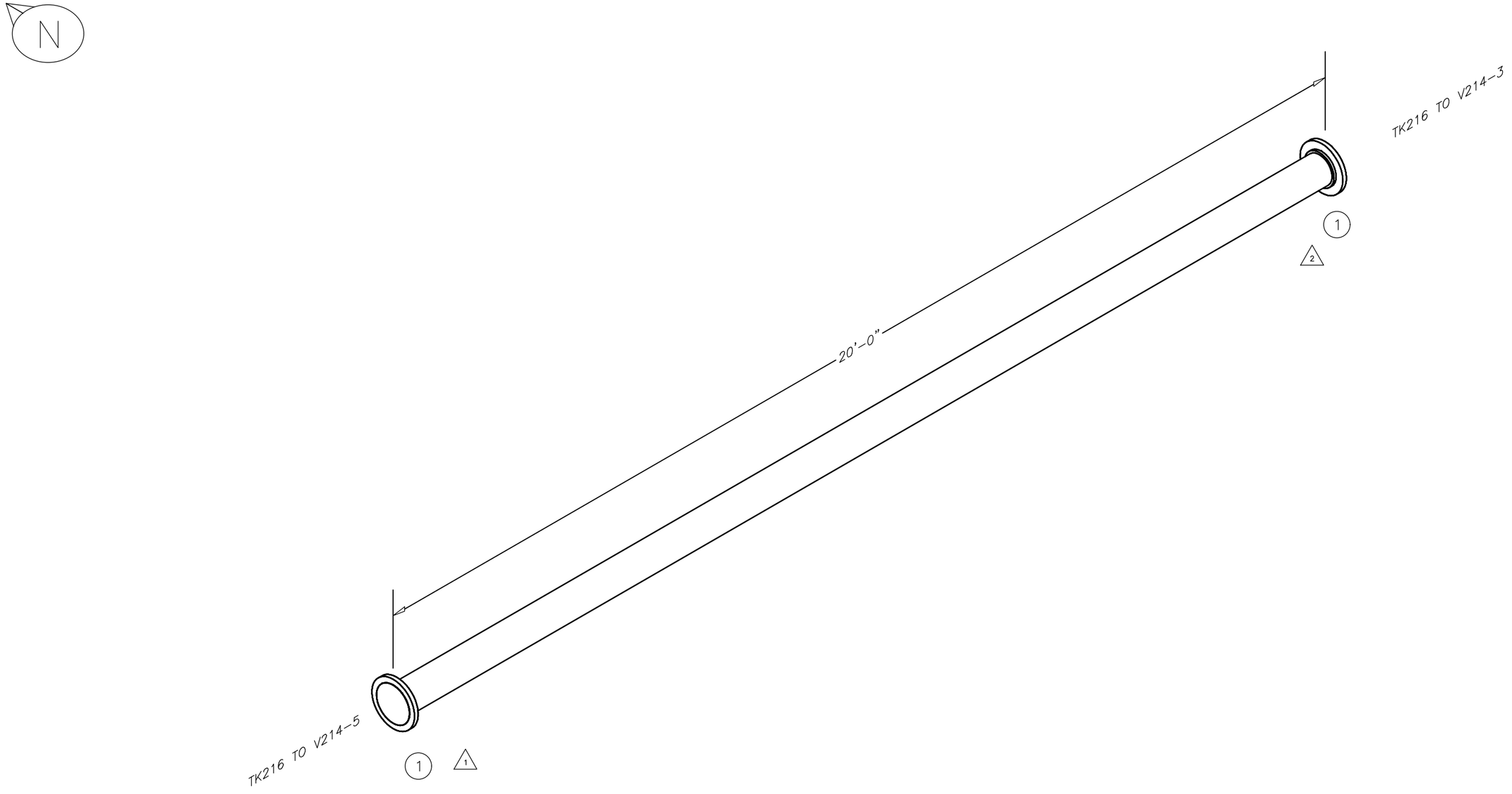

WELD LOG			
WELD #	SIZE	WELDER ID	DATE
1	6		
2	6		
3			
4			
5			
6			
7			
8			
9			
10			

BILL OF MATERIAL		
ITEM	QUANTITY	DESCRIPTION
1	2	6" FLANGE
2		
3		
4		
5		

RUPERT

BULK FUELS FACILITY

DATE:5/19/2016

TK216 TO V214-4

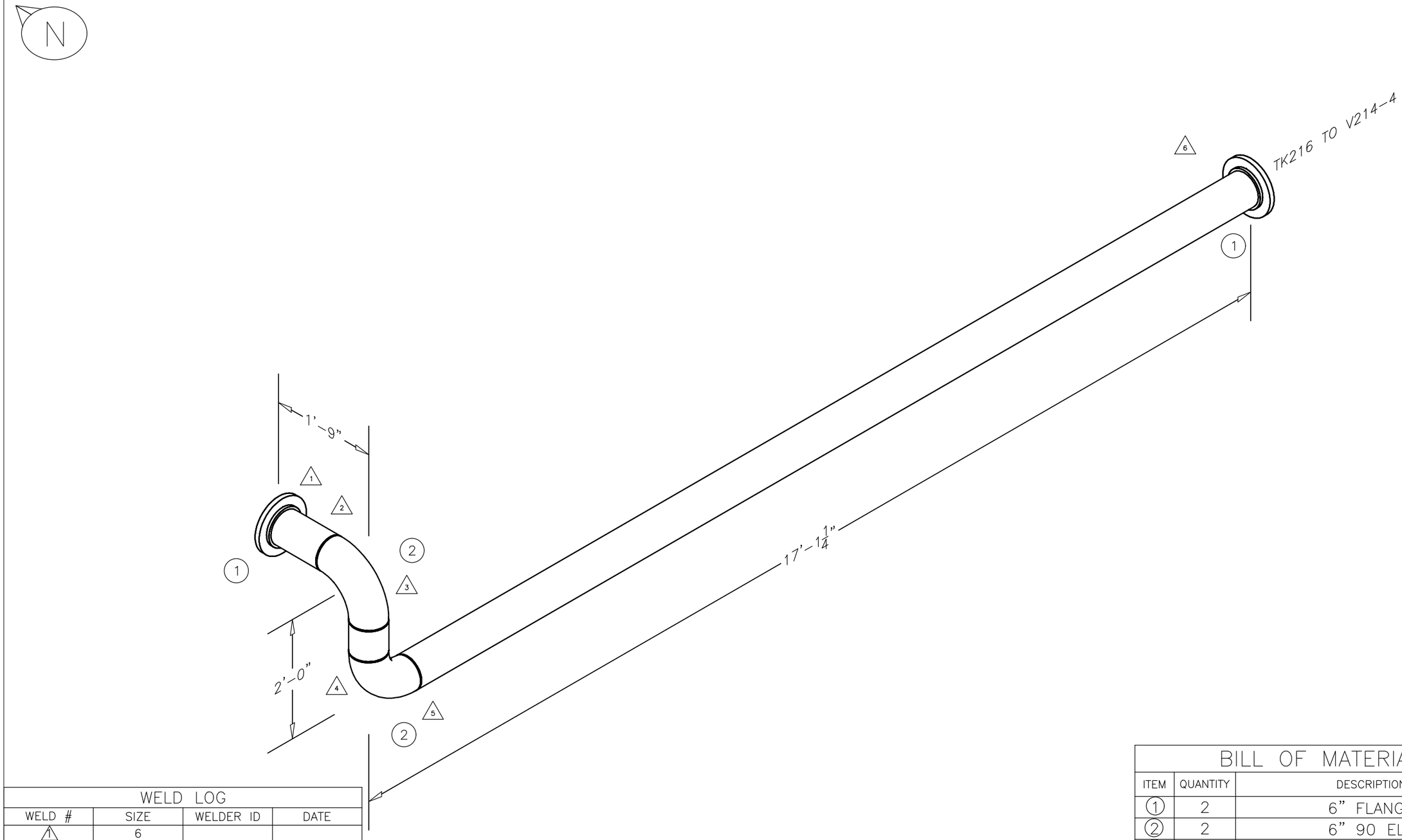

WELD LOG			
WELD #	SIZE	WELDER ID	DATE
1	6		
2	6		
3	6		
4	6		
5	6		
6	6		
7			
8			
9			
10			

BILL OF MATERIAL		
ITEM	QUANTITY	DESCRIPTION
1	2	6" FLANGE
2	2	6" 90 ELL
3		
4		
5		

RUPERT

BULK FUELS FACILITY

DATE:5/19/2016

TK216 TO V214-5

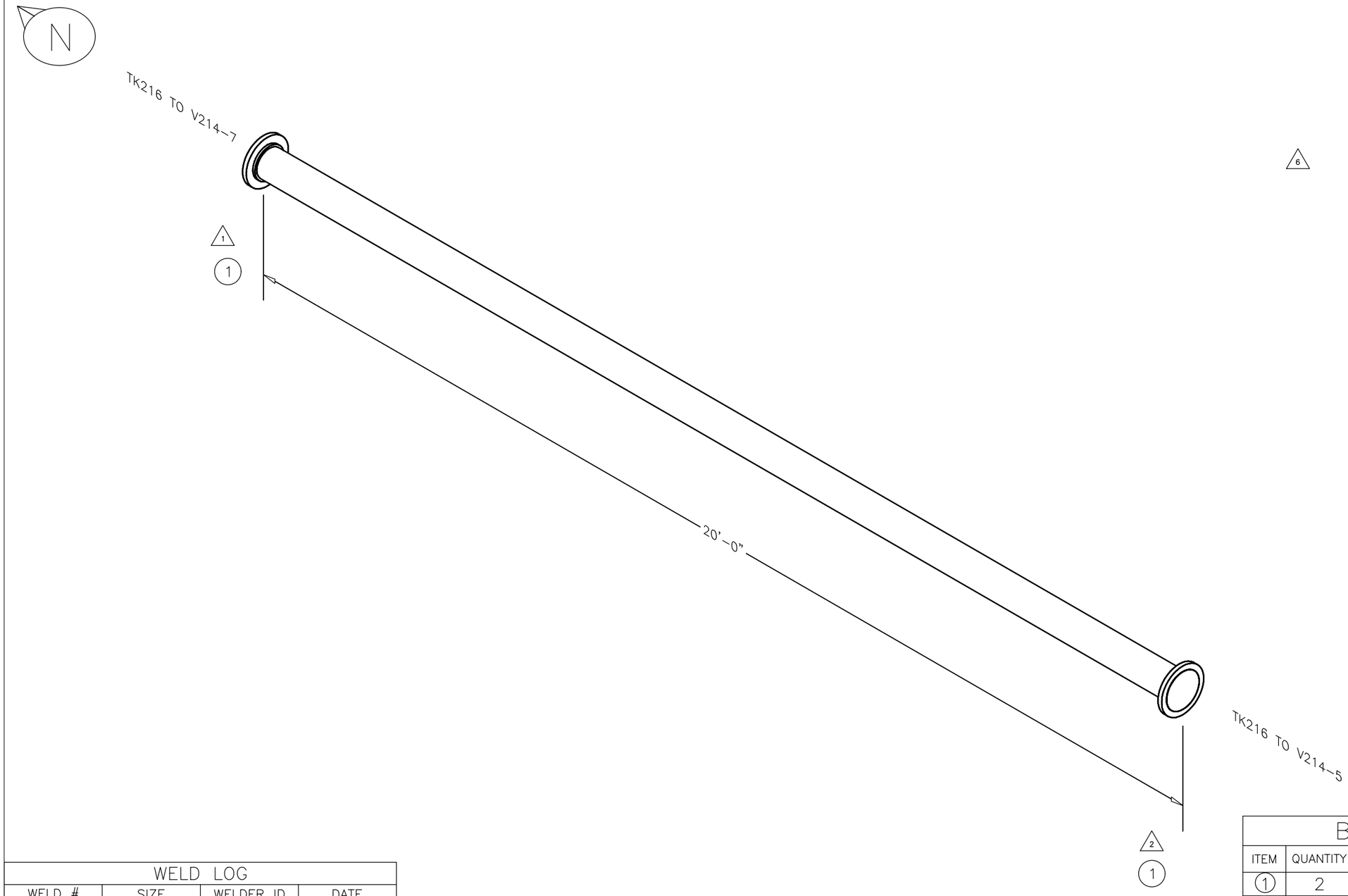

WELD LOG			
WELD #	SIZE	WELDER ID	DATE
1	6		
2	6		
3			
4			
5			
6			
7			
8			
9			
10			

BILL OF MATERIAL		
ITEM	QUANTITY	DESCRIPTION
1	2	6" FLANGE
2		
3		
4		
5		

RUPERT

BULK FUELS FACILITY

DATE:5/19/2016

TK216 TO V214-6

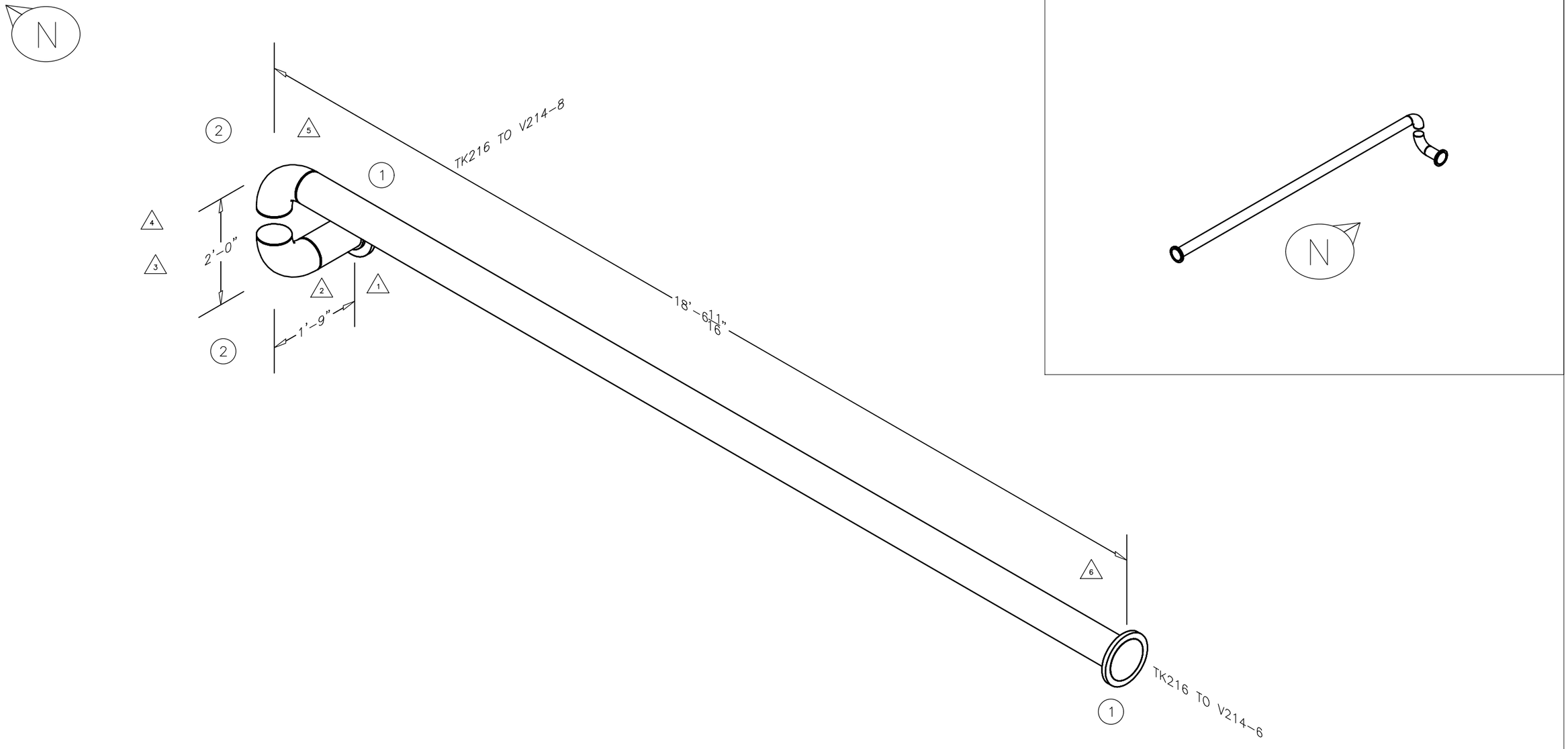

WELD LOG			
WELD #	SIZE	WELDER ID	DATE
1	6		
2	6		
3	6		
4	6		
5	6		
6	6		
7			
8			
9			
10			

BILL OF MATERIAL		
ITEM	QUANTITY	DESCRIPTION
1	2	6" FLANGE
2		
3		
4		
5		

RUPERT

BULK FUELS FACILITY

DATE:5/19/2016

TK216 TO V214-7

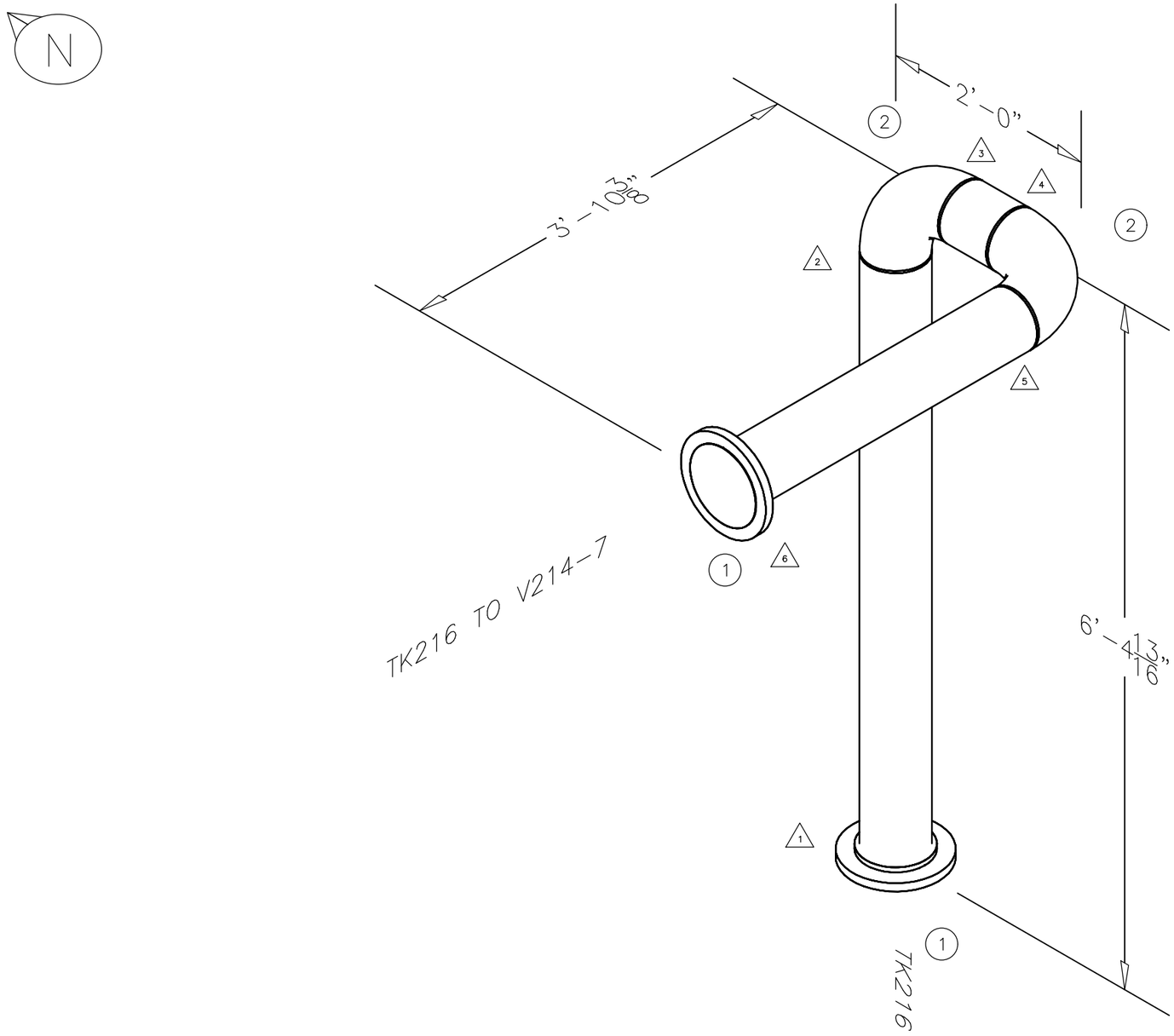

WELD LOG			
WELD #	SIZE	WELDER ID	DATE
1	6		
2	6		
3	6		
4	6		
5	6		
6	6		
7			
8			
9			
10			

BILL OF MATERIAL		
ITEM	QUANTITY	DESCRIPTION
1	2	6" FLANGE
2	2	6" 90 ELL
3		
4		
5		

RUPERT

BULK FUELS FACILITY

DATE:5/19/2016

TK216 TO V214-8

N

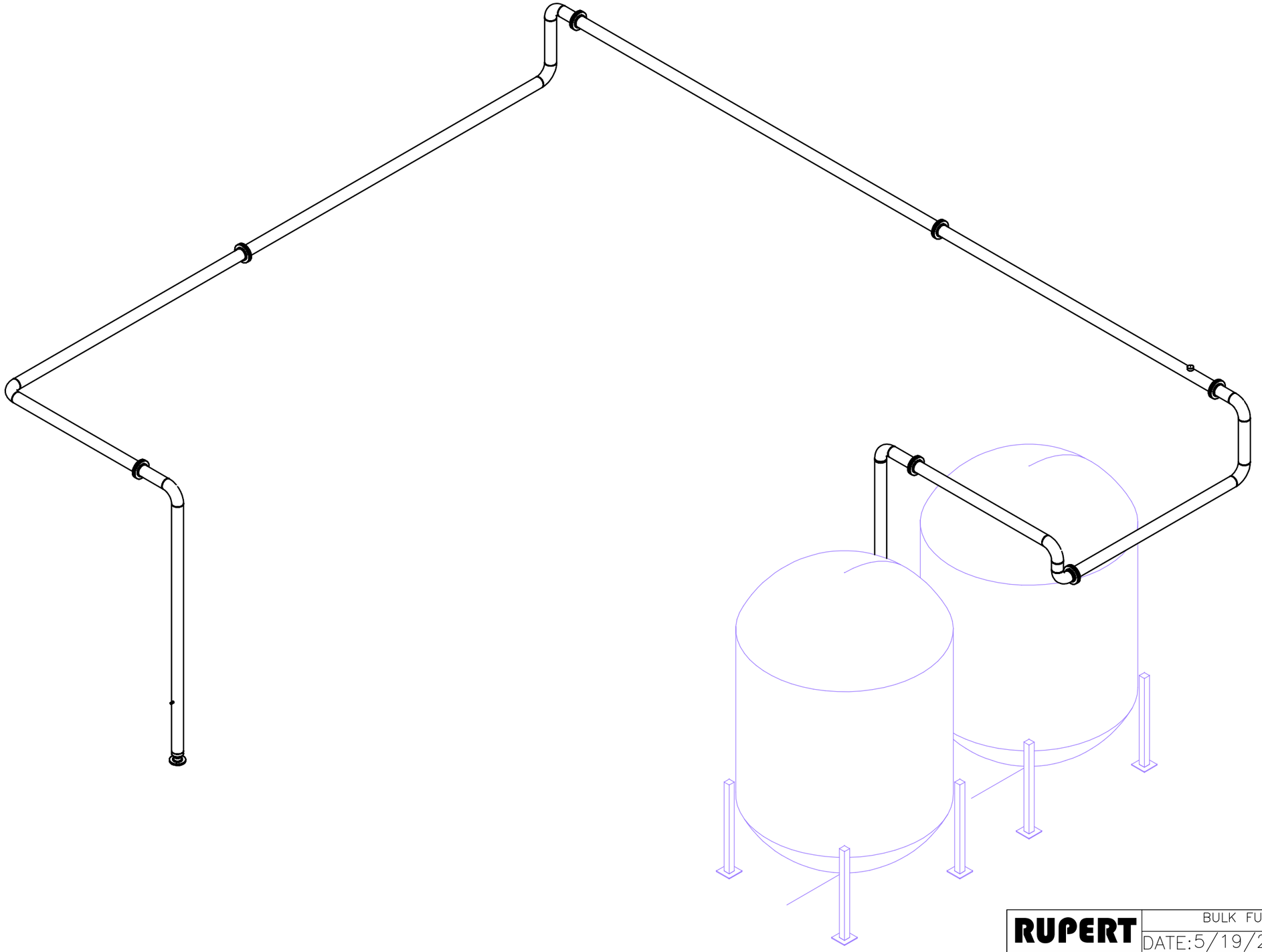

RUPERT	BULK FUELS FACILITY
	DATE:5/19/2016
V214 TO F212B-8 COMBINED	

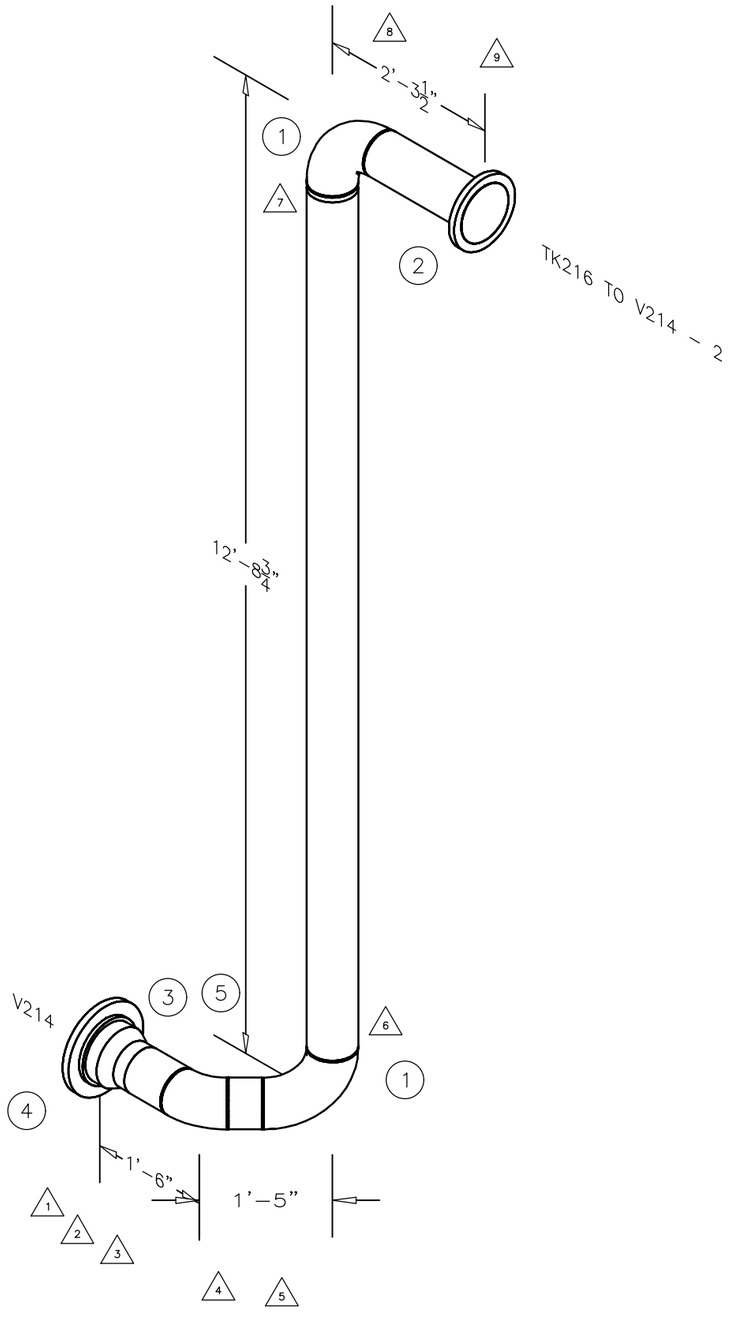

WELD LOG			
WELD #	SIZE	WELDER ID	DATE
1	8		
2	6		
3	6		
4	6		
5	6		
6	6		
7	6		
8	6		
9	6		
10			

BILL OF MATERIAL		
ITEM	QUANTITY	DESCRIPTION
1	2	6" 90 ELL
2	1	6" FLANGE
3	1	8 x 6 RED
4	1	8" FLANGE
5	1	6" 45 ELL

RUPERT

BULK FUELS FACILITY

DATE:5/19/2016

V214 TO F212B-1

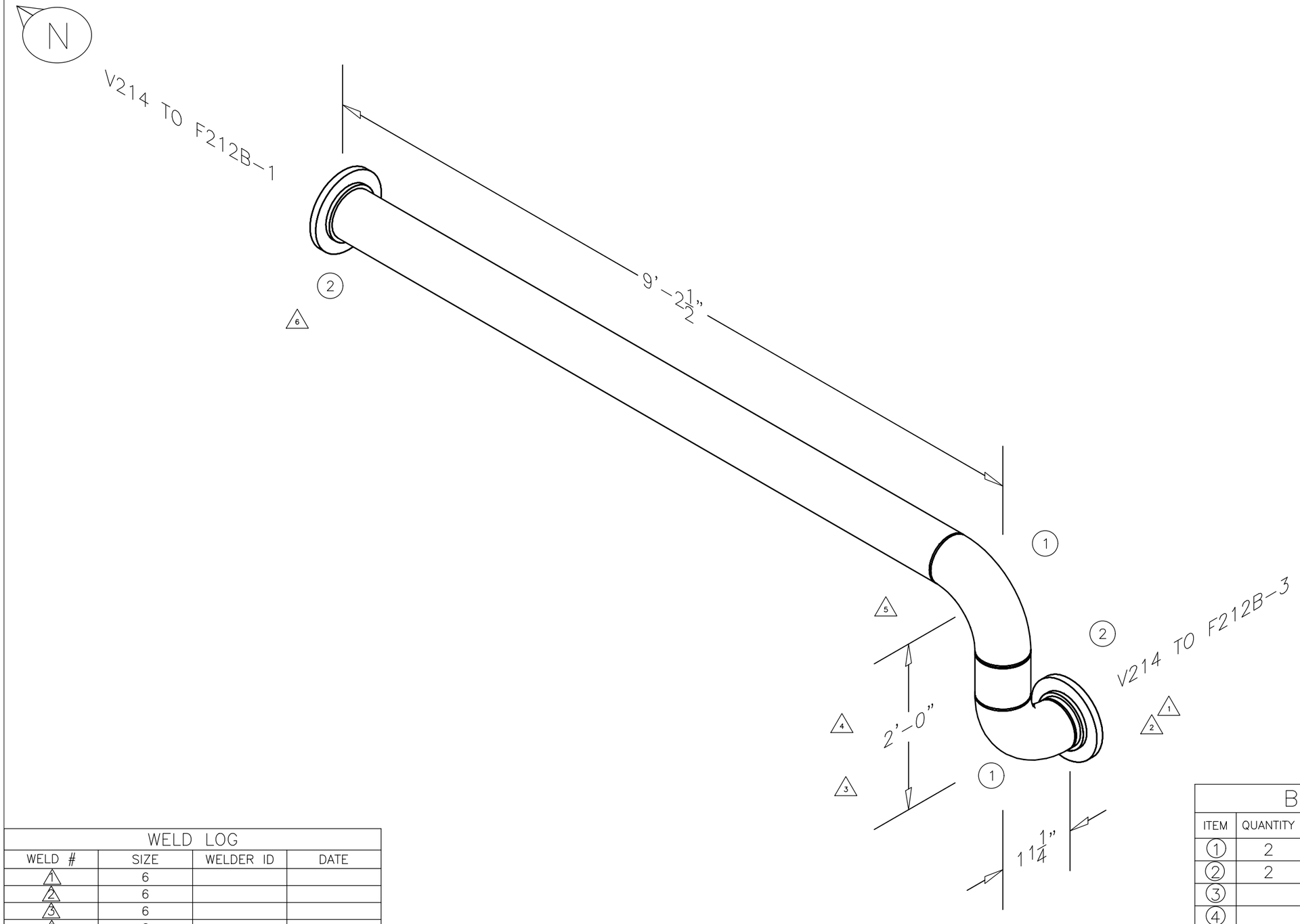

WELD LOG			
WELD #	SIZE	WELDER ID	DATE
1	6		
2	6		
3	6		
4	6		
5	6		
6	6		
7			
8			
9			
10			

BILL OF MATERIAL		
ITEM	QUANTITY	DESCRIPTION
1	2	6" 90 ELL
2	2	6" FLANGE
3		
4		
5		

RUPERT

BULK FUELS FACILITY

DATE:5/19/2016

V214 TO F212B-2

N

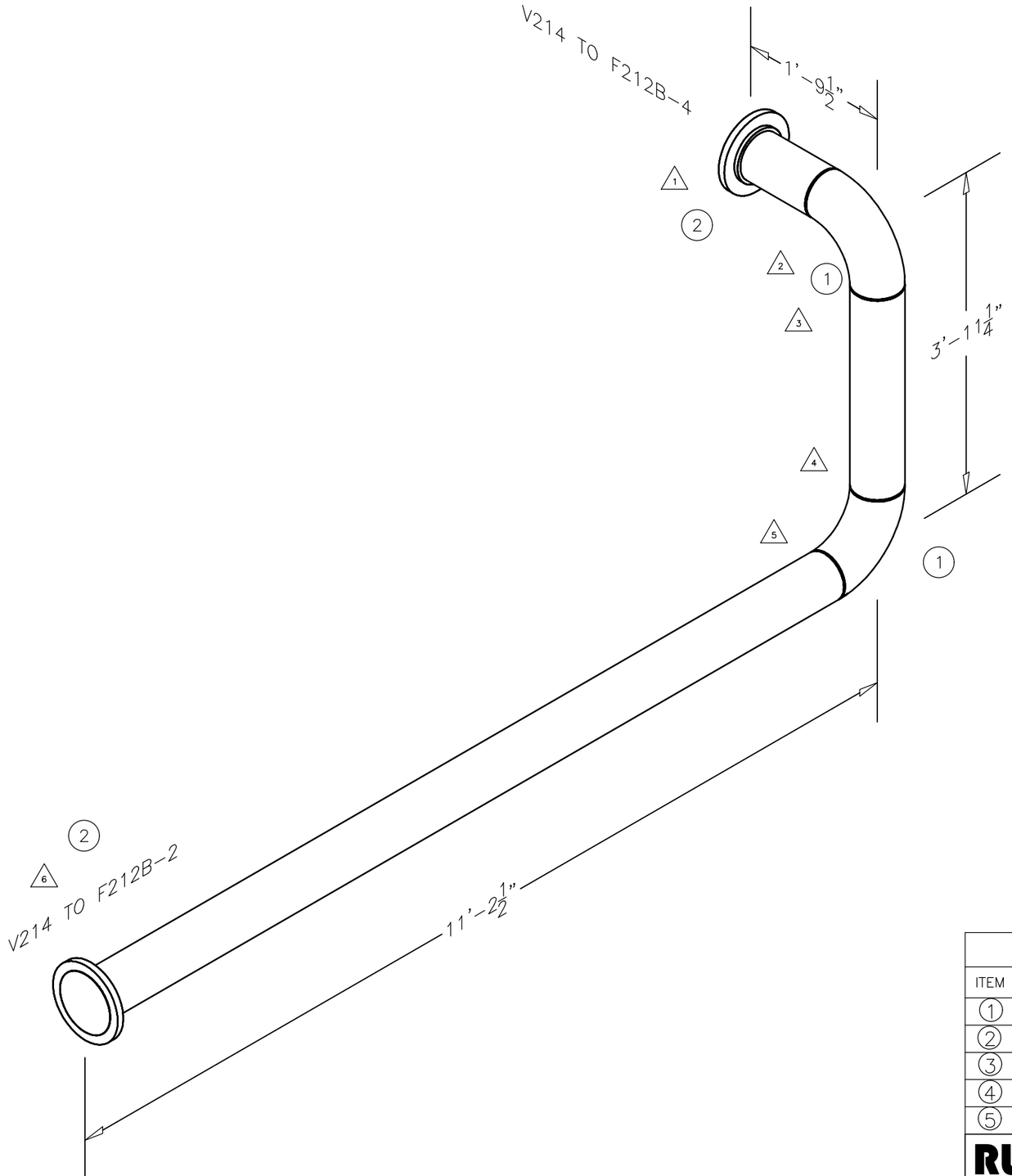

WELD LOG			
WELD #	SIZE	WELDER ID	DATE
1	6		
2	6		
3	6		
4	6		
5	6		
6	6		
7			
8			
9			
10			

BILL OF MATERIAL		
ITEM	QUANTITY	DESCRIPTION
1	2	6" 90 ELL
2	2	6" FLANGE
3		
4		
5		

RUPERT

BULK FUELS FACILITY

DATE:5/19/2016

V214 TO F212B-3

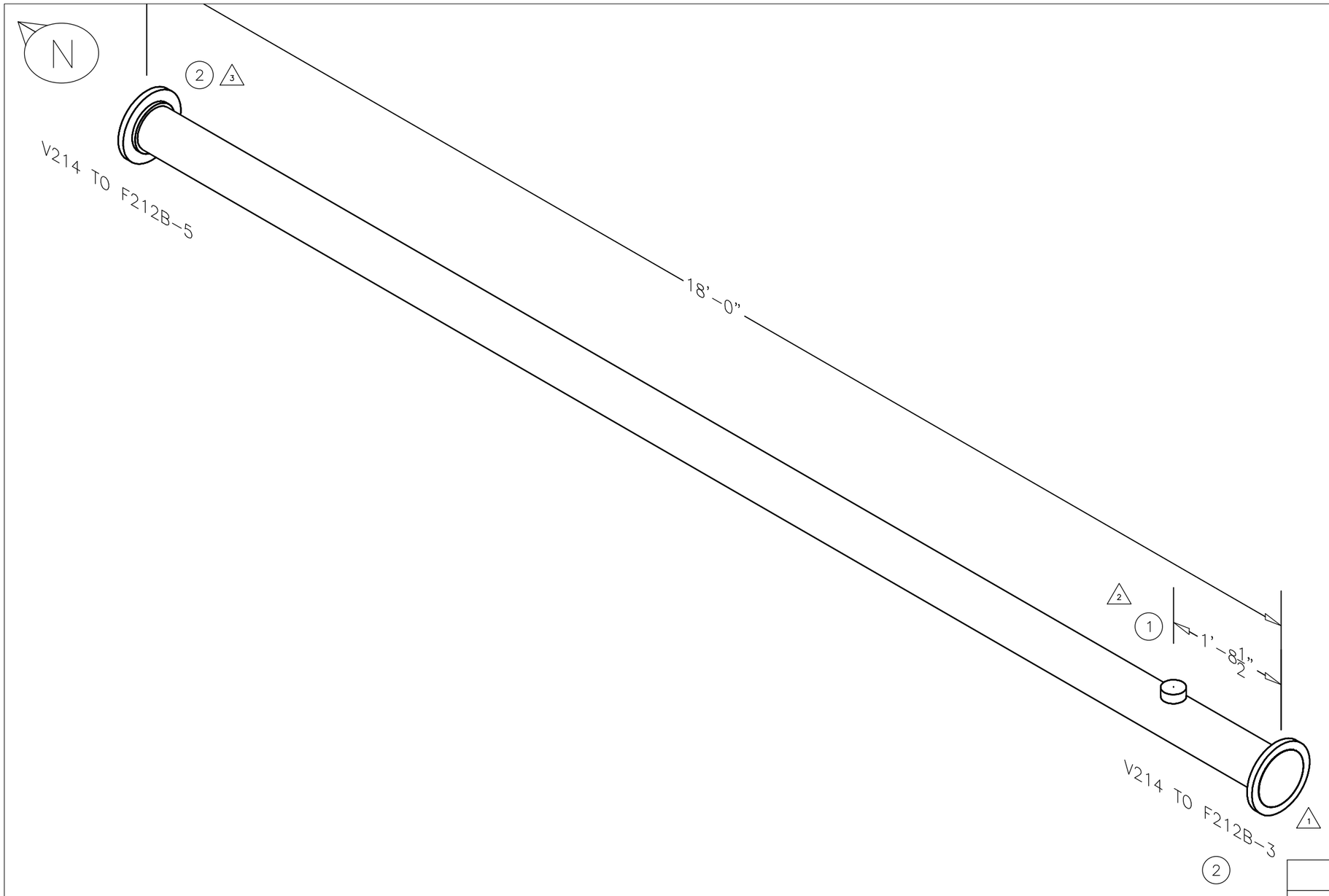

WELD LOG			
WELD #	SIZE	WELDER ID	DATE
1	6		
2	1		
3	6		
4			
5			
6			
7			
8			
9			
10			

BILL OF MATERIAL		
ITEM	QUANTITY	DESCRIPTION
1	1	1" THREAD O LET
2	2	6" FLANGE
3		
4		
5		

RUPERT

BULK FUELS FACILITY

DATE:5/19/2016

V214 TO F212B-4

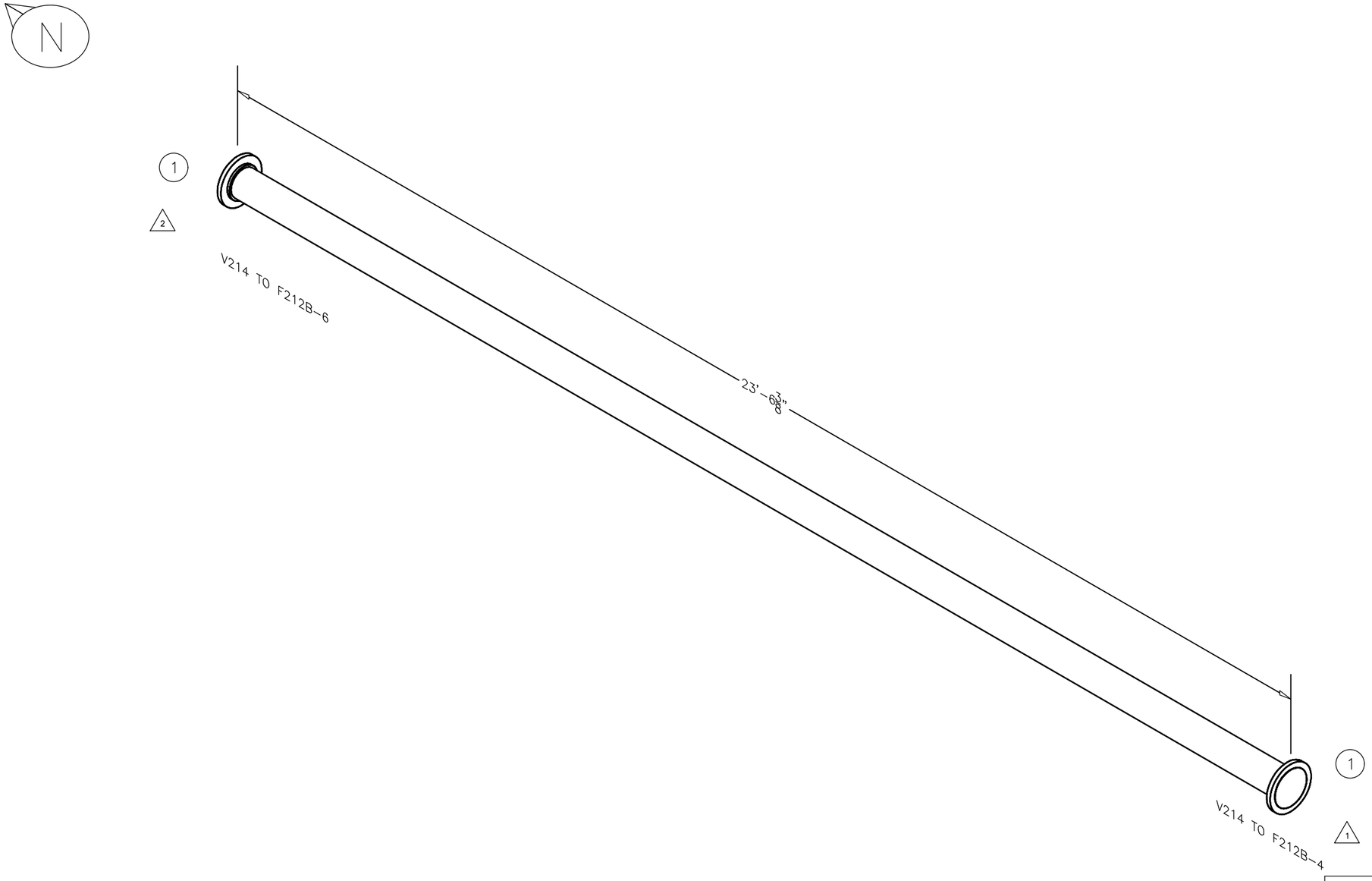

WELD LOG			
WELD #	SIZE	WELDER ID	DATE
1	6		
2	6		
3			
4			
5			
6			
7			
8			
9			
10			

BILL OF MATERIAL		
ITEM	QUANTITY	DESCRIPTION
1	2	6" FLANGE
2		
3		
4		
5		

RUPERT

BULK FUELS FACILITY

DATE:5/19/2016

V214 TO F212B-5

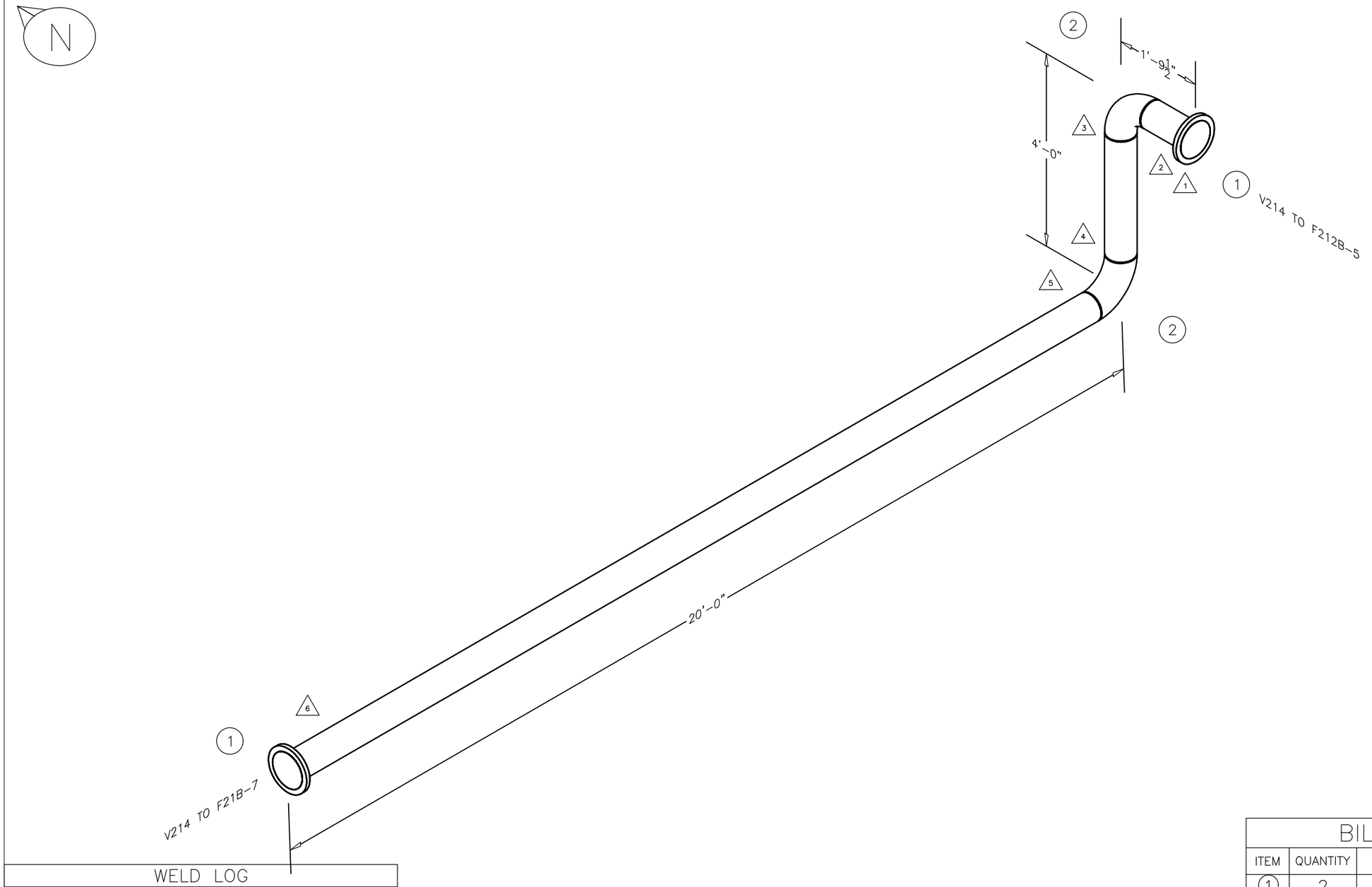

WELD LOG			
WELD #	SIZE	WELDER ID	DATE
1	6		
2	6		
3	6		
4	6		
5	6		
6	6		
7			
8			
9			
10			

BILL OF MATERIAL		
ITEM	QUANTITY	DESCRIPTION
1	2	6" FLANGE
2		
3		
4		
5		

RUPERT

BULK FUELS FACILITY

DATE:5/19/2016

V214 TO F212B-6

N

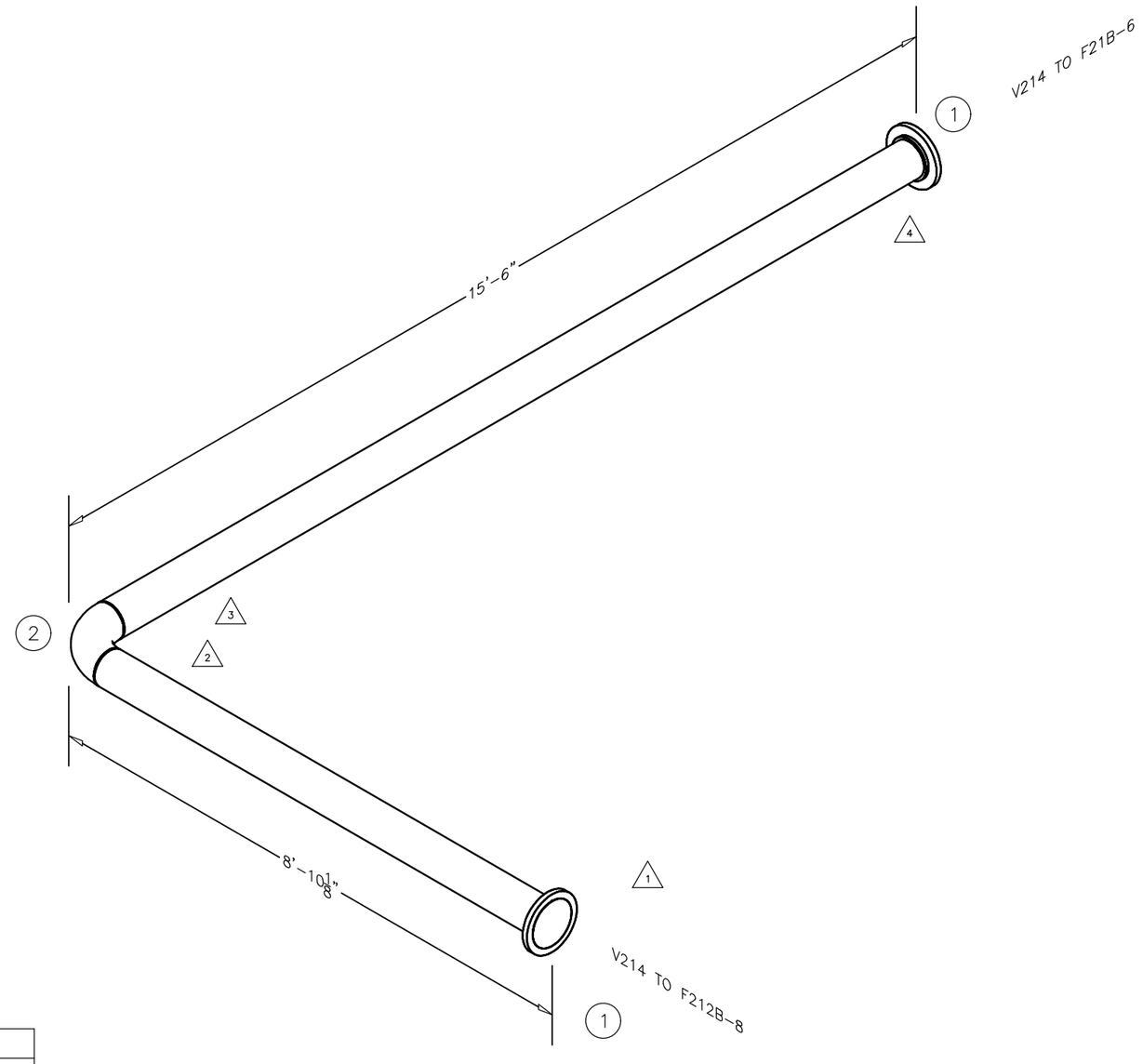

WELD LOG			
WELD #	SIZE	WELDER ID	DATE
1	6		
2	6		
3	6		
4	6		
5			
6			
7			
8			
9			
10			

BILL OF MATERIAL		
ITEM	QUANTITY	DESCRIPTION
1	2	6" FLANGE
2	1	6" 90 ELL
3		
4		
5		

RUPERT

BULK FUELS FACILITY

DATE:5/19/2016

V214 TO F212B-7

N

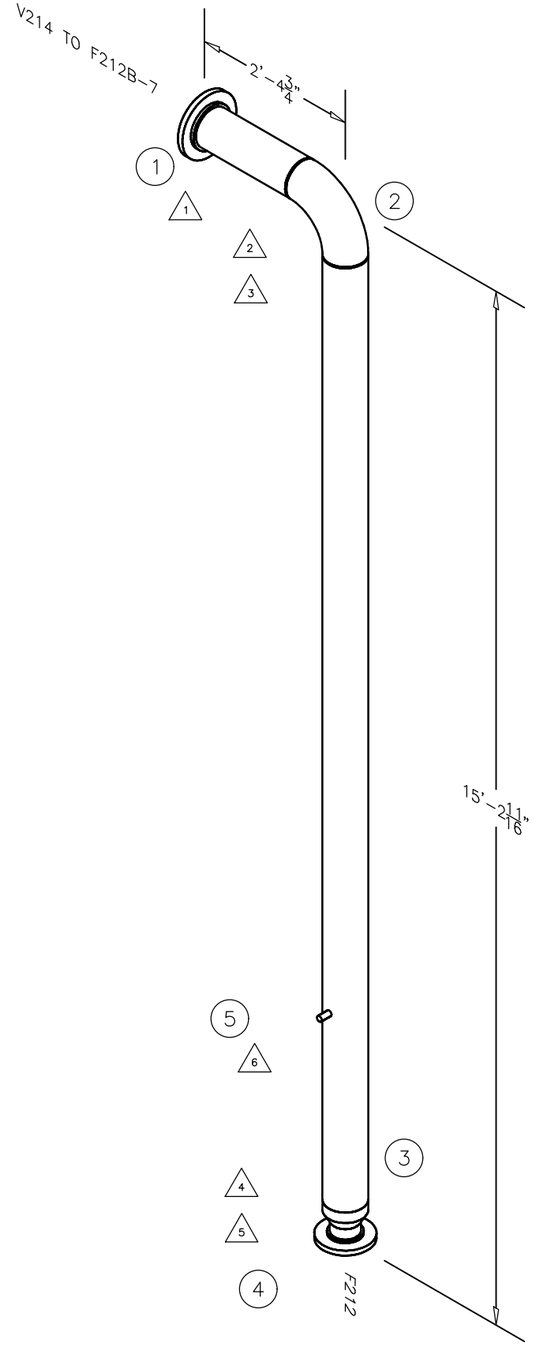

WELD LOG			
WELD #	SIZE	WELDER ID	DATE
1	6		
2	6		
3	6		
4	6		
5	4		
6	1/2"		
7			
8			
9			
10			

BILL OF MATERIAL		
ITEM	QUANTITY	DESCRIPTION
1	1	6" FLANGE
2	1	6" 90 ELL
3	1	6 x 4 RED
4	1	4" FLANGE
5	1	1/2" THREAD O LET

RUPERT

BULK FUELS FACILITY

DATE:5/19/2016

V214 TO F212B-8

TRANSMITTAL DOCUMENT

Date:	**10-4-16**	**From:**	**Ed Butler**
To:	**EA Engineering, Science, and Technology, Inc., 320 Gold Ave. SW, Suite 1300 Albuquerque, NM 87102 Devon Jercinovic**	**Job Name:**	**Kirtland AFB, NM Bulk Fuels Facility**
		Reference:	
		Transmittal Method:	**E-mail**
		Sent By:	**Ed Butler**

Submittal	Specification Section	Item Description
8	3.14.1	Exterior Paint Specifications
8	3.14.2	Interior Paint Specifications

Ed Butler
TECHSAS, Inc.
4819 West Bayshore Drive
Bacliff, TX 77518

"I hereby certify that the (equipment) (material) (article) shown and marked in this submittal is that proposed to be incorporated with the Contract, is in compliance with the contract drawings and specification, can be installed in the allocated spaces, and is submitted for Contractor approval.

Certified by _____.
(Signature when applicable) Date: _____.

Kirtland Air Force Base
Albuquerque, New Mexico

Project: Bulk Fuels Facility

Paint (Submittal 8)

Owner:	**Kirtland Air Force Base** **US Army Corps of Engineers**
Owner's Agent:	**EA Engineering, Science, and Technology, Inc.,** **320 Gold Ave. SW, Suite 1300** **Albuquerque, NM 87102**
Engineer:	**EA Engineering, Science, and Technology, Inc.,** **320 Gold Ave. SW, Suite 1300** **Albuquerque, NM 87102**
General Contractor:	**TECHSAS, Inc.** **4819 West Bayshore Drive** **Bacliff, TX 77518**
Construction Management:	**Tasman Geosciences** **6899 Pecos Street** **Unit C** **Denver, CO 80221**

TABLE OF CONTENTS

Description:

- **Paint specification sheets**

3.14.1 Exterior Paint Tables

A – New Steel
Primer - Devshield 4160 Multi-Purpose Primer
Topcoats – Devguard 4306 Alkyd SemiGloss
B – New Steel
Primer - Devshield 4160 Multi-Purpose Primer
Topcoats – Devguard 4306 Alkyd SemiGloss
C – Galvanized Surfaces
Primer - Devshield 4160 Multi-Purpose Primer
Topcoats – Speedhide 6-900XI SemiGloss
D – Aluminum Alloy
Primer – Devshield 4160 Multi-Purpose Primer
Topcoats – Devguard 4306 Alkyd SemiGloss
E – Adjacent Surfaces
Primer - Devshield 4160 Multi-Purpose Primer
Topcoats – Devguard 4306 Alkyd SemiGloss

3.14.2 Interior Paint Tables

A–1 Epoxy
Epoxy Block Filler – Amerlock 400BF
Epoxy Topcoats – Aquapon 35 Gloss
A-1 Interior Ferrous Metals Alkyd
Primer - Devshield 4160 Multi-Purpose Primer
Topcoats – Devguard 4306 Alkyd SemiGloss
B-1 Alkyd
Primer - Devshield 4160 Multi-Purpose Primer
Topcoats – Devguard 4306 Alkyd SemiGloss
C-1 Aluminum Paint
Primer - Devshield 4160 Multi-Purpose Primer
Topcoats – Speedhide Aluminum 6-230
D-1 Alkyd
Primer – Devshield 4160 Multi-Purpose Primer
Topcoats – Devguard 4306 Alkyd SemiGloss
Div 6 Interior Wood
Primer – Gripper 3210
Topcoats – Manor Hall 82-500 SemiGloss

DEVGUARD® 4160

DESCRIPTION

One-component, multi-purpose tank and structural primer

PRINCIPAL CHARACTERISTICS

- Rust Inhibitive interior / exterior alky primer
- Ideal for structural steel, tank exteriors, piping and equipment
- May be topcoated on ferrous metal with epoxy and polyurethane coatings as well as conventional alkyds and latex products
- Fast drying properties
- Lead and chromate free

COLOR AND GLOSS LEVEL

- Gray, White, Red
- Flat

BASIC DATA AT 68°F (20°C)

Data for product	
Number of components	One
Volume solids	51 ± 2%
VOC (Supplied)	max. 3.5 lb/US gal (approx. 418 g/l)
Recommended dry film thickness	2.0 - 2.5 mils (50 - 64 µm) depending on system
Theoretical spreading rate	409 ft^2/US gal for 2.0 mils (10.2 m^2/l for 50 µm)
Shelf life	At least 12 months when stored cool and dry

Notes:
- See ADDITIONAL DATA – Overcoating intervals
- See ADDITIONAL DATA – Curing time

RECOMMENDED SUBSTRATE CONDITIONS AND TEMPERATURES

- Coating performance is, in general, proportional to the degree of surface preparation

Steel

- Remove all rust, dirt, moisture, grease or other contaminants from the surface
- Abrasive blast cleaning to SSPC SP-6 standards will give optimum performance
- Where abrasive blasting is not practical, power tool cleaning in accordance with SSPC SP-3 or hand tool cleaning to SSPC SP-2 requirements is acceptable

PPG Protective & Marine Coatings
Bringing innovation to the surface.™

DEVGUARD® 4160

Galvanizing

- Degrease to SSPC SP-1 and remove any white corrosion products by hand abrasion
- Galvanizing that has had at least 12 months of exterior weathering may be coated after power washing to remove all contaminants and white rust

Substrate temperature and application conditions

- Surface temperature during application should be between 50°F (10°C) and 120°F (49°C)
- Surface temperature during application should be at least 5°F (3°C) above dew point
- Relative humidity during application and curing should not exceed 85%

Warning

Removal of old paint by sanding, scraping or other means may generate dust or fumes which contain lead. EXPOSURE TO LEAD DUST OR FUMES MAY CAUSE ADVERSE HEALTH EFFECTS, ESPECIALLY IN CHILDREN OR PREGNANT WOMEN. Controlling exposure to lead or other hazardous substances requires the use of proper protective equipment, such as a properly fitted and approved (e.g., NIOSHapproved) respirator and proper containment and cleanup. For additional information, contact the USEPA/Lead Information Hotline at 1-800-424-LEAD or the regional Health Canada office

SYSTEM SPECIFICATION

- Primers: Direct to metal
- Topcoats: DEVGUAR D4306, DEVGUARD 4308, DEVFLEX 4206 QD, DEVFLEX 4208 QD, DEVFLEX 4212 HP, DEVFLEX 4216 HP, DEVFLEX 659, UNIGRIP 4380, UNIGRIP 4382, consult PPG technical sales for other options

Note: Consult your sales representative for additional topcoat offerings

INSTRUCTIONS FOR USE

- Inspect the top surface and remove any “skins” that may have formed on top
- Agitate with a power mixer for 1 – 2 minutes until completely dispersed. Ensure good off-bottom mixing

Application

- Area should be sheltered from airborne particulates and pollutants
- Ensure good ventilation during application and curing
- Provide shelter to prevent wind from affecting spray patterns

DEVGUARD® 4160

Air spray

- Separate air and fluid pressure regulators and a moisture and oil trap in the main air supply line are recommended.

Recommended thinner
No thinner should be added

Nozzle orifice
Approx. 0.070 in (1.8 mm)

Airless spray

- 30:1 pump or larger
- Adjust pump pressure as needed

Recommended thinner
No thinner should be added

Nozzle orifice
0.015 – 0.017 in (approx. 0.38 – 0.43 mm)

Note: Adjust pump pressure as needed

Brush/roller

- Use a high quality polyester/nylon brush and/or a high quality 3/8" nap roller. In hot or dry conditions, layoff lightly rolling with 3/8" nap roller cover. Multiple coats may be required to achieve specified film thickness

Recommended thinner
No thinner should be added

Cleaning solvent
Paint thinner (lacquer thinner or mineral spirits)

ADDITIONAL DATA

Overcoating interval for DFT up to 2.0 mils (51 µm)		
Overcoating with...	**Interval**	**77°F (25°C)**
itself	Minimum Maximum	2 hours Extended

Notes:

- Overcoating times valid for a relative humidity of 50%
- Drying times may vary depending on temperature, humidity, and air movement

DEVGUARD® 4160

Curing time for DFT up to 2.0 mils (51 µm)		
Substrate temperature	**Dry to touch**	**Dry hard**
70°F (21°C)	20 minutes	1 hour

Note: Curing times valid for a relative humidity of 50%

DISCLAIMER

- For professional use only. Not for household use. Do not use under alkyd or oil-based paints

SAFETY PRECAUTIONS

- For paint and recommended thinners see INFORMATION SHEETS 1430, 1431 and relevant Material Safety Data Sheets

Danger

Rags, steel wool or waste soaked with this product may spontaneously catch fire if improperly discarded. Immediately after use, place rags, steel wool or waste in a sealed water-filled metal container. Refer to www.pittsburghpaints.com, Spontaneous Combustion Advisory for additional information

WORLDWIDE AVAILABILITY

It is always the aim of PPG Protective and Marine Coatings to supply the same product on a worldwide basis. However, slight modification of the product is sometimes necessary to comply with local or national rules/circumstances. Under these circumstances an alternative product data sheet is used.

REFERENCES

• CONVERSION TABLES	INFORMATION SHEET	1410
• EXPLANATION TO PRODUCT DATA SHEETS	INFORMATION SHEET	1411
• SAFETY INDICATIONS	INFORMATION SHEET	1430
• SAFETY IN CONFINED SPACES AND HEALTH SAFETY, EXPLOSION HAZARD – TOXIC HAZARD	INFORMATION SHEET	1431

WARRANTY

PPG warrants (i) its title to the product, (ii) that the quality of the product conforms to PPG's specifications for such product in effect at the time of manufacture and (iii) that the product shall be delivered free of the rightful claim of any third person for infringement of any U.S. patent covering the product. THESE ARE THE ONLY WARRANTIES THAT PPG MAKES AND ALL OTHER EXPRESS OR IMPLIED WARRANTIES, UNDER STATUTE OR ARISING OTHERWISE IN LAW, FROM A COURSE OF DEALING OR USAGE OF TRADE, INCLUDING WITHOUT LIMITATION, ANY OTHER WARRANTY OF FITNESS FOR A PARTICULAR PURPOSE OR USE, ARE DISCLAIMED BY PPG. Any claim under this warranty must be made by Buyer to PPG in writing within five (5) days of Buyer's discovery of the claimed defect, but in no event later than the expiration of the applicable shelf life of the product, or one year from the date of the delivery of the product to the Buyer, whichever is earlier. Buyer's failure to notify PPG of such non-conformance as required herein shall bar Buyer from recovery under this warranty.

PPG Protective & Marine Coatings
Bringing innovation to the surface.™

DEVGUARD® 4160

LIMITATIONS OF LIABILITY

IN NO EVENT WILL PPG BE LIABLE UNDER ANY THEORY OF RECOVERY (WHETHER BASED ON NEGLIGENCE OF ANY KIND, STRICT LIABILITY OR TORT) FOR ANY INDIRECT, SPECIAL, INCIDENTAL, OR CONSEQUENTIAL DAMAGES IN ANY WAY RELATED TO, ARISING FROM, OR RESULTING FROM ANY USE MADE OF THE PRODUCT. The information in this sheet is intended for guidance only and is based upon laboratory tests that PPG believes to be reliable. PPG may modify the information contained herein at any time as a result of practical experience and continuous product development. All recommendations or suggestions relating to the use of the PPG product, whether in technical documentation, or in response to a specific inquiry, or otherwise, are based on data, which to the best of PPG's knowledge, is reliable. The product and related information is designed for users having the requisite knowledge and industrial skills in the industry and it is the end-user's responsibility to determine the suitability of the product for its own particular use and it shall be deemed that Buyer has done so, as its sole discretion and risk. PPG has no control over either the quality or condition of the substrate, or the many factors affecting the use and application of the product. Therefore, PPG does not accept any liability arising from any loss, injury or damage resulting from such use or the contents of this information (unless there are written agreements stating otherwise). Variations in the application environment, changes in procedures of use, or extrapolation of data may cause unsatisfactory results. This sheet supersedes all previous versions and it is the Buyer's responsibility to ensure that this information is current prior to using the product. Current sheets for all PPG Protective & Marine Coatings Products are maintained at www.ppgpmc.com. The English text of this sheet shall prevail over any translation thereof.

AVAILABILITY

Packaging

1-gallon and 5-gallon kits

The PPG Logo, Bringing innovation to the surface., and all other trademarks herein are property of the PPG group of companies.

PPG Protective & Marine Coatings
Bringing innovation to the surface.™

International. MATERIAL SAFETY DATA SHEET

prepared 07/29/10

HAZARDS IDENTIFICATION (ANSI Section 3)

Primary route(s) of exposure : Inhalation, skin contact, eye contact, ingestion.

Effects of overexposure :

Inhalation : Irritation of respiratory tract. Prolonged inhalation may lead to mucous membrane irritation, fatigue, drowsiness, dizziness and/or lightheadedness, headache, uncoordination, nausea, vomiting, chest pain, coughing, central nervous system depression, intoxication, anesthetic effect or narcosis, difficulty of breathing, bronchitis, tremors, liver damage, kidney damage, pulmonary edema, loss of consciousness.

Skin contact : Irritation of skin. Prolonged or repeated contact can cause dermatitis, defatting.

Eye contact : Irritation of eyes. Prolonged or repeated contact can cause conjunctivitis, tearing of eyes, redness of eyes.

Ingestion : Ingestion may cause lung inflammation and damage due to aspiration of material into lungs, mouth and throat irritation, mucous membrane irritation, headache, uncoordination, nausea, vomiting, gastro-intestinal disturbances, abdominal pain, central nervous system depression, anesthetic effect or narcosis, difficulty of breathing, pulmonary edema, convulsions, loss of consciousness.

Medical conditions aggravated by exposure : Eye, skin, respiratory disorders, kidney disorders, liver disorders.

FIRST-AID MEASURES (ANSI Section 4)

Inhalation : Remove to fresh air. Restore and support continued breathing. Get emergency medical attention. Have trained person give oxygen if necessary. Get medical help for any breathing difficulty. Remove to fresh air if inhalation causes eye watering, headaches, dizziness, or other discomfort.

Skin contact : Wash thoroughly with soap and water. If any product remains, gently rub petroleum jelly, vegetable or mineral/baby oil onto skin. Repeated applications may be needed. Remove contaminated clothing. Wash contaminated clothing before re-use. If irritation occurs, consult a physician.

Eye contact : Flush immediately with large amounts of water, especially under lids for at least 15 minutes. If irritation or other effects persist, obtain medical treatment.

Ingestion : If swallowed, obtain medical treatment immediately.

FIRE-FIGHTING MEASURES (ANSI Section 5)

Fire extinguishing media : Dry chemical or foam water fog. Carbon dioxide. Closed containers may explode when exposed to extreme heat or fire. Vapors are heavier than air and may travel long distances to a source of ignition and flash back. Vapors can form explosive mixtures in air at elevated temperatures. Closed containers may burst if exposed to extreme heat or fire. Dust explosion hazard. May decompose under fire conditions emitting irritant and/or toxic gases.

Fire fighting procedures : Water may be used to cool and protect exposed containers. Firefighters should use full protective clothing, eye protection, and self-contained breathing apparatus. Self-contained breathing apparatus recommended.

Hazardous decomposition or combustion products : Carbon monoxide, carbon dioxide, acrid fumes, oxides of phosphorus, toxic gases, smoke and soot. Oxides of calcium.

ACCIDENTAL RELEASE MEASURES (ANSI Section 6)

Steps to be taken in case material is released or spilled : Comply with all applicable health and environmental regulations. Eliminate all sources of ignition. Ventilate area. Evacuate all unnecessary personnel. Place collected material in proper container. Prevent airborne particulates from forming. Complete personal protective equipment must be used during cleanup. Sweep up material. Large spills - shut off leak if safe to do so. Dike and contain spill. Pump to storage or salvage vessels. Use absorbent to pick up excess residue. Keep salvageable material and rinse water out of sewers and water courses. Small spills - use absorbent to pick up residue and dispose of properly.

HANDLING AND STORAGE (ANSI Section 7)

Handling and storage : Store below 100f (38c). Keep away from heat, sparks and open flame. Keep away from direct sunlight, heat and all sources of ignition.

Other precautions : Use only with adequate ventilation. Do not take internally. Keep out of reach of children. Avoid contact with skin and eyes, and breathing of vapors. Wash hands thoroughly after handling, especially before eating or smoking. Keep containers tightly closed and upright when not in use. Empty containers may contain hazardous residues. Ground equipment when transferring to prevent accumulation of static charge.

EXPOSURE CONTROLS/PERSONAL PROTECTION (ANSI Section 8)

Respiratory protection : Control environmental concentrations below applicable exposure standards when using this material. When respiratory protection is determined to be necessary, use a NIOSH/MSHA (Canadian z94.4) Approved elastomeric sealing- surface facepiece respirator outfitted with organic vapor cartridges and paint spray (dust/mist) prefilters. Determine the proper level of protection by conducting appropriate air monitoring. Consult 29CFR1910.134 For selection of respirators (Canadian z94.4).

Ventilation : Provide dilution ventilation or local exhaust to prevent build-up of vapors. Use explosion-proof equipment.

Personal protective equipment : Eye wash, safety shower, safety glasses or goggles. Impervious gloves, impervious clothing, face shield.

STABILITY AND REACTIVITY (ANSI Section 10)

Under normal conditions : Stable see section 5 fire fighting measures

Materials to avoid : Oxidizers, acids, reducing agents, bases, aluminum, ammonium salts, nitric acid, combustible materials, magnesium, mineral acids.

Conditions to avoid : Elevated temperatures, contact with oxidizing agent, high concentration of dust, sparks, open flame, ignition sources.

Hazardous polymerization : Will not occur

TOXICOLOGICAL INFORMATION (ANSI Section 11)

Supplemental health information : Excessive inhalation of fumes may lead to metal fume fever characterized by a metallic taste in mouth, excessive thirst, coughing, weakness, fatigue, muscular pain, nausea, chills and fever. Notice - reports have associated repeated and prolonged occupational overexposure to solvents with permanent brain and nervous system damage. Intentional misuse by deliberately concentrating and inhaling the contents may be harmful or fatal. Nuisance dust hazard - overexposure may cause mechanical irritation of eyes, skin, and respiratory tract. Contains iron oxide, repeated or prolonged exposure to iron oxide dust may cause siderosis, a benign pneumoconiosis. Other effects of overexposure may include toxicity to liver, kidney, central nervous system.

The information contained herein is based on data available at the time of preparation of this data sheet which Akzo Nobel Paints believes to be reliable. However, no warranty is expressed or implied regarding the accuracy of this data. Akzo Nobel Paints shall not be responsible for the use of this information, or of any product, method or apparatus mentioned and you must make your own determination of its suitability and completeness for your own use, for the protection of the environment, and the health and safety of your employees and the users of this material.
Complies with OSHA hazard communication standard 29CFR1910.1200.

Akzo Nobel Paints 15885 Sprague Road Strongsville, Ohio 44136 EMERGENCY TELEPHONE NO. (800) 545-2643

DEVGUARD 4160 MULTI-PURPOSE TANK & STRUCTURAL PRIMER

4160

Carcinogenicity : Inhalation of non-asbestiform cosmetic grade talc for 2 years at 6 and 18 mg/m3 produced clear evidence of carcinogenicity in female rats (lung and adrenal tumors) and some evidence of carcinogenicity in male rats (adrenal tumors). No evidence of carcinogenicity was demonstrated in male and female mice exposed under the same conditions. Microscopic examination of the lungs of rats and mice exposed to talc revealed additional exposure related effects primarily associated with the inflammatory response. In long term (2 year) inhalation studies, the national toxicology program (NTP) found clear evidence of carcinogenic activity in mice and male rats and some evidence of carcinogenic activity in female rats exposed to cumene. Contains crystalline silica which is considered a hazard by inhalation. IARC has classified crystalline silica as carcinogenic to humans (group 1). Crystalline silica is also a known cause of silicosis, a noncancerous lung disease. The national toxicology program (NTP) has classified crystalline silica as a known human carcinogen. The international agency for research on cancer (IARC) has evaluated ethylbenzene and classified it as a possible human carcinogen (group 2b) based on sufficient evidence for carcinogenicity in experimental animals, but inadequate evidence for cancer in exposed humans. In a 2 year inhalation study conducted by the national toxicology program (NTP), ethylbenzene vapor at 750 ppm produced kidney and testicular tumors in rats and lung and liver tumors in mice. Genetic toxicity studies showed no genotoxic effects. The relevance of these results to humans is not known. In a lifetime inhalation study, exposure to 250 mg/m3 titanium dioxide resulted in the development of lung tumors in rats. These tumors occurred only at dust levels that overwhelmed the animals' lung clearance mechanisms and were different from common human lung tumors in both type and location. The relevance of these findings to humans is unknown but questionable. The international agency for research on cancer (IARC) has classified titanium dioxide as possibly carcinogenic to humans (group 2b) based on inadequate evidence of carcinogenicity in humans and sufficient evidence of carcinogenicity in experimental animals. Contains methyl ethyl ketoxime (meko). In a lifetime, inhalation study, liver carcinomas were observed in rodents exposed to meko. The relevance to humans is unknown.

Reproductive effects : High exposures to xylene in some animal studies, often at maternally toxic levels, have affected embryo/fetal development. The significance of this finding to humans is not known.

Mutagenicity : No mutagenic effects are anticipated

Teratogenicity : No teratogenic effects are anticipated

ECOLOGICAL INFORMATION (ANSI Section 12)

No ecological testing has been done by akzo nobel paints llc on this product as a whole.

DISPOSAL CONSIDERATIONS (ANSI Section 13)

Waste disposal : Dispose in accordance with all applicable regulations. Avoid discharge to natural waters.

REGULATORY INFORMATION (ANSI Section 15)

As of the date of this MSDS, all of the components in this product are listed (or are otherwise exempt from listing) on the TSCA inventory. This product has been classified in accordance with the hazard criteria of the CPR (controlled products regulations) and the MSDS contains all the information required by the CPR.

Physical Data (ANSI Sections 1, 9, and 14)

Product Code	Description	Wt. / Gal.	VOC gr. / ltr.	% Volatile by Volume	Flash Point	Boiling Range	HMIS	DOT, proper shipping name
4160-1000	devguard 4160 multi purpose tank & structura l primer - white	11.95	400.05	47.44	108 f	277-415	*320	UN1263, paint, combustible liquid, PGIII
4160-6120	devguard 4160 multi-purpose tank & structura l primer - gray	11.73	403.10	47.80	108 f	277-415	*320	UN1263, paint, combustible liquid, PGIII *** protect from freezing******
4160-7100	devguard 4160 multi-purpose tank & structural primer - red	11.94	401.25	47.58	108 f	277-415	*320	UN1263, paint, combustible liquid, PGIII

Ingredients Product Codes with % by Weight (ANSI Section 2)

Chemical Name	Common Name	CAS. No.	4160-1000	4160-6120	4160-7100
benzene, ethyl-	ethylbenzene	100-41-4	.1-1.0	.1-1.0	.1-1.0
1,3,5-trimethylbenzene	1,3,5-trimethylbenzene	108-67-8	1-5	1-5	1-5
2-heptanone	methyl amyl ketone	110-43-0	5-10	5-10	5-10
iron oxide	ferric oxide	1309-37-1			1-5
zinc oxide	zinc oxide	1314-13-2	1-5	1-5	1-5
limestone	limestone	1317-65-3			1-5
benzene, dimethyl-	xylene	1330-20-7	1-5	1-5	1-5
titanium oxide	titanium dioxide	13463-67-7	5-10	1-5	
calcium metasilicate	wollastonite	13983-17-0	10-20	10-20	10-20
talc	talc	14807-96-6	20-30	20-30	20-30
quartz	quartz	14808-60-7	.1-1.0	.1-1.0	.1-1.0
ethanol	ethyl alcohol	64-17-5	.1-1.0	.1-1.0	.1-1.0
solvent naphtha (petroleum), light aromatic	light aromatic solvent naphtha	64742-95-6	5-10	5-10	5-10
phosphoric acid, zinc salt	zinc phosphate	7779-90-0	1-5	1-5	1-5
stoddard solvent	mineral spirits	8052-41-3	1-5	1-5	1-5
benzene,1,2,4-trimethyl-	pseudocumene	95-63-6	5-10	5-10	5-10
benzene, (1-methylethyl)-	cumene	98-82-8	.1-1.0	.1-1.0	.1-1.0
alkyd resin	alkyd resin	Sup. Conf.	10-20	10-20	10-20
long oil alkyd resin	long oil alkyd resin	Sup. Conf.	5-10	5-10	5-10

Chemical Hazard Data (ANSI Sections 2, 8, 11, and 15)

		ACGIH-TLV				OSHA-PEL				S.R. Std.	S2	S3	CC					
Common Name	CAS. No.	8-Hour TWA	STEL	C	S	8-Hour TWA	STEL	C	S					H	M	N	I	O
ethylbenzene	100-41-4	100 ppm	125 ppm	not est.	not est.	100 ppm	not est.	not est.	not est.	not est.	n	y	y	y	n	n	y	n
1,3,5-trimethylbenzene	108-67-8	25 ppm	35 ppm	not est.	not est.	not est.	not est.	not est.	not est.	not est.	n	n	n	n	n	n	n	n
methyl amyl ketone	110-43-0	50 ppm	not est.	not est.	not est.	100 ppm	not est.	not est.	not est.	not est.	n	n	n	n	n	n	n	n
ferric oxide	1309-37-1	5 mg/m3	not est.	not est.	not est.	5 mg/m3	not est.	not est.	not est.	not est.	n	n	n	n	n	n	n	n
zinc oxide	1314-13-2	2 mg/m3	10 mg/m3	not est.	not est.	5 mg/m3	not est.	not est.	not est.	not est.	n	y	n	n	n	n	n	n
limestone	1317-65-3	10 mg/m3	not est.	not est.	not est.	5 mg/m3	not est.	not est.	not est.	not est.	n	n	n	n	n	n	n	n
xylene	1330-20-7	100 ppm	150 ppm	not est.	not est.	100 ppm	not est.	not est.	not est.	not est.	n	y	y	y	n	n	n	n
titanium dioxide	13463-67-7	10 mg/m3	not est.	not est.	not est.	10 mg/m3	not est.	not est.	not est.	not est.	n	n	n	n	n	y	y	n
wollastonite	13983-17-0	10 mg/m3	not est.	not est.	not est.	5 mg/m3	not est.	not est.	not est.	not est.	n	n	n	n	n	n	n	n
talc	14807-96-6	2 mg/m3	not est.	not est.	not est.	.1 mg/m3	not est.	not est.	not est.	not est.	n	n	n	n	n	n	n	n
quartz	14808-60-7	.025 mg/m3	not est.	not est.	not est.	0.1 mg/m3	not est.	not est.	not est.	not est.	n	n	n	n	n	y	y	n
light aromatic solvent naphtha	64742-95-6	not est.	not est.	not est.	not est.	500x ppm	not est.	not est.	not est.	not est.	n	n	n	n	n	n	n	n
zinc phosphate	7779-90-0	10 mg/m3	not est.	not est.	not est.	15 mg/m3	not est.	not est.	not est.	not est.	n	y	n	n	n	n	n	n
mineral spirits	8052-41-3	100 ppm	not est.	not est.	not est.	500 ppm	not est.	not est.	not est.	not est.	n	n	n	n	n	n	n	n
pseudocumene	95-63-6	not est.	not est.	not est.	not est.	not est.	not est.	not est.	not est.	not est.	n	y	n	n	n	n	n	n
cumene	98-82-8	50 ppm	not est.	not est.	not est.	50 ppm	not est.	not est.	y	not est.	n	y	y	y	n	n	n	n

Footnotes:

C=Ceiling - Concentration that should not be exceeded, even instantaneously.

S=Skin - Additional exposure, over and above airborn exposure, may result from skin absorption.

n/a=not applicable
not est=not established
CC=CERCLA Chemical

ppm=parts per million
mg/m3=milligrams per cubic meter
Sup Conf=Supplier Confidential

S2=Sara Section 302 EHS
S3=Sara Section 313 Chemical
S.R.Std.=Supplier Recommended Standard

H=Hazardous Air Pollutant, M=Marine Pollutant
P=Pollutant, S=Severe Pollutant
Carcinogenicity Listed By:
N=NTP, I=IARC, O=OSHA, y=yes, n=no

DEVOE HIGH PERFORMANCE COATINGS

AkzoNobel

MATERIAL SAFETY DATA SHEET

prepared 09/10/10

HAZARDS IDENTIFICATION (ANSI Section 3)

Primary route(s) of exposure : Inhalation, skin contact, eye contact, ingestion.

Effects of overexposure :

Inhalation : Irritation of respiratory tract. Prolonged inhalation may lead to loss of appetite, mucous membrane irritation, fatigue, drowsiness, dizziness and/or lightheadedness, headache, uncoordination, nausea, vomiting, chest pain, coughing, central nervous system depression, intoxication, anesthetic effect or narcosis, difficulty of breathing, allergic response, asthmatic reaction, severe lung irritation or damage, liver damage, kidney damage, convulsions, pneumoconiosis, loss of consciousness, asphyxiation. Possible sensitization to respiratory tract.

Skin contact : Irritation of skin. Prolonged or repeated contact can cause dermatitis, defatting. Skin contact may result in dermal absorption of component(s) of this product which may cause blurred vision, central nervous system depression.

Eye contact : Irritation of eyes. Prolonged or repeated contact can cause conjunctivitis, blurred vision, tearing of eyes, redness of eyes.

Ingestion : Ingestion may cause lung inflammation and damage due to aspiration of material into lungs, mouth and throat irritation, mucous membrane irritation, headache, uncoordination, nausea, vomiting, diarrhea, gastro-intestinal disturbances, abdominal pain, central nervous system depression, difficulty of breathing, convulsions, loss of consciousness.

Medical conditions aggravated by exposure : Eye, skin, respiratory disorders, lung disorders, asthma-like conditions.

FIRST-AID MEASURES (ANSI Section 4)

Inhalation : Remove to fresh air. Restore and support continued breathing. Get emergency medical attention. Have trained person give oxygen if necessary. Get medical help for any breathing difficulty. Remove to fresh air if inhalation causes eye watering, headaches, dizziness, or other discomfort.

Skin contact : Wash thoroughly with soap and water. If any product remains, gently rub petroleum jelly, vegetable or mineral/baby oil onto skin. Repeated applications may be needed. Remove contaminated clothing. Wash contaminated clothing before re-use.

Eye contact : Flush immediately with large amounts of water, especially under lids for at least 15 minutes. If irritation or other effects persist, obtain medical treatment.

Ingestion : If swallowed, obtain medical treatment immediately.

FIRE-FIGHTING MEASURES (ANSI Section 5)

Fire extinguishing media : Dry chemical or foam water fog. Carbon dioxide. Closed containers may explode when exposed to extreme heat or fire. Vapors are heavier than air and may travel long distances to a source of ignition and flash back. Vapors can form explosive mixtures in air at elevated temperatures. May decompose under fire conditions emitting irritant and/or toxic gases.

Fire fighting procedures : Water may be used to cool and protect exposed containers. Firefighters should use full protective clothing, eye protection, and self-contained breathing apparatus.

Hazardous decomposition or combustion products : Carbon monoxide, carbon dioxide, oxides of nitrogen, phosphorous, toxic gases. Oxides of calcium.

ACCIDENTAL RELEASE MEASURES (ANSI Section 6)

Steps to be taken in case material is released or spilled : Comply with all applicable health and environmental regulations. Eliminate all sources of ignition. Ventilate area. Evacuate all unnecessary personnel. Place collected material in proper container. Complete personal protective equipment must be used during cleanup. Large spills - shut off leak if safe to do so. Dike and contain spill. Pump to storage or salvage vessels. Use absorbent to pick up excess residue. Keep salvageable material and rinse water out of sewers and water courses. Small spills - use absorbent to pick up residue and dispose of properly.

HANDLING AND STORAGE (ANSI Section 7)

Handling and storage : Store below 100f (38c). Keep away from heat, sparks and open flame.

Other precautions : Use only with adequate ventilation. Do not take internally. Keep out of reach of children. Avoid contact with skin and eyes, and breathing of vapors. Wash hands thoroughly after handling, especially before eating or smoking. Keep containers tightly closed and upright when not in use. Avoid conditions which result in formation of inhalable particles such as spraying or abrading (sanding) painted surfaces. If such conditions cannot be avoided, use appropriate respiratory protection as directed under exposure controls/personal protection. Empty containers may contain hazardous residues. Ground equipment when transferring to prevent accumulation of static charge.

EXPOSURE CONTROLS/PERSONAL PROTECTION (ANSI Section 8)

Respiratory protection : Control environmental concentrations below applicable exposure standards when using this material. When respiratory protection is determined to be necessary, use a NIOSH/MSHA (Canadian z94.4) Approved elastomeric sealing- surface facepiece respirator outfitted with organic vapor cartridges and paint spray (dust/mist) prefilters. Determine the proper level of protection by conducting appropriate air monitoring. Consult 29CFR1910.134 For selection of respirators (Canadian z94.4).

Ventilation : Provide dilution ventilation or local exhaust to prevent build-up of vapors. Use explosion-proof equipment.

Personal protective equipment : Eye wash, safety shower, safety glasses or goggles. Impervious gloves, impervious clothing.

STABILITY AND REACTIVITY (ANSI Section 10)

Under normal conditions : Stable see section 5 fire fighting measures

Materials to avoid : Oxidizers, acids, bases, ammonium salts, mineral acids. Styrene monomer.

Conditions to avoid : Elevated temperatures, sparks, open flame, ignition sources.

Hazardous polymerization : Will not occur

TOXICOLOGICAL INFORMATION (ANSI Section 11)

Supplemental health information : Notice - reports have associated repeated and prolonged occupational overexposure to solvents with permanent brain and nervous system damage. Intentional misuse by deliberately concentrating and inhaling the contents may be harmful or fatal.

The information contained herein is based on data available at the time of preparation of this data sheet which Akzo Nobel Paints believes to be reliable. However, no warranty is expressed or implied regarding the accuracy of this data. Akzo Nobel Paints shall not be responsible for the use of this information, or of any product, method or apparatus mentioned and you must make your own determination of its suitability and completeness for your own use, for the protection of the environment, and the health and safety of your employees and the users of this material.
Complies with OSHA hazard communication standard 29CFR1910.1200.

Akzo Nobel Paints 15885 Sprague Road Strongsville, Ohio 44136 EMERGENCY TELEPHONE NO. (800) 545-2643

DEVGUARD RUST PREVENTATIVE SEMI-GLOSS ENAMEL

4306

Carcinogenicity : Stoddard solvent iic has been shown to cause kidney tumors in male rats in a national toxicology program (NTP) study. These tumors were associated with a specific protein, alpha- 2u-microglobulin. Because humans do not produce this protein stoddard solvent iic has not been classified as a human carcinogen. Contains crystalline silica which is considered a hazard by inhalation. IARC has classified crystalline silica as carcinogenic to humans (group 1). Crystalline silica is also a known cause of silicosis, a noncancerous lung disease. The national toxicology program (NTP) has classified crystalline silica as a known human carcinogen. The international agency for research on cancer (IARC) has evaluated ethylbenzene and classified it as a possible human carcinogen (group 2b) based on sufficient evidence for carcinogenicity in experimental animals, but inadequate evidence for cancer in exposed humans. In a 2 year inhalation study conducted by the national toxicology program (NTP), ethylbenzene vapor at 750 ppm produced kidney and testicular tumors in rats and lung and liver tumors in mice. Genetic toxicity studies showed no genotoxic effects. The relevance of these results to humans is not known. The international agency for research on cancer (IARC) has classified cobalt and certain cobalt compounds as possibly carcinogenic to humans (group 2b). Injection of metallic cobalt, cobalt alloys, and certain cobalt compounds has resulted in the development of localized tumors in laboratory animals. In a 2-year inhalation bioassay conducted by the national toxicology program (NTP), ethylene glycol butyl ether (egbe) caused an increased incidence of liver tumors in male mice and forestomach tumors in female mice exposed to 250 ppm, the highest concentration tested with mice. In rats, an increased incidence of tumors affecting the adrenal gland was seen in females exposed at 125 ppm only. This finding was not statistically significant. No increased incidence of any tumor type was seen in male rats exposed to the highest test concentration of 125ppm. The relevance of these findings to humans is unclear. In a lifetime inhalation study, exposure to 250 mg/m3 titanium dioxide resulted in the development of lung tumors in rats. These tumors occurred only at dust levels that overwhelmed the animals' lung clearance mechanisms and were different from common human lung tumors in both type and location. The relevance of these findings to humans is unknown but questionable. The international agency for research on cancer (IARC) has classified titanium dioxide as possibly carcinogenic to humans (group 2b) based on inadequate evidence of carcinogenicity in humans and sufficient evidence of carcinogenicity in experimental animals. Contains methyl ethyl ketoxime (meko). In a lifetime, inhalation study, liver carcinomas were observed in rodents exposed to meko. The relevance to humans is unknown.

Reproductive effects : High exposures to xylene in some animal studies, often at maternally toxic levels, have affected embryo/fetal development. The significance of this finding to humans is not known.

Mutagenicity : No mutagenic effects are anticipated

Teratogenicity : No teratogenic effects are anticipated

ECOLOGICAL INFORMATION (ANSI Section 12)

No ecological testing has been done by akzo nobel paints llc on this product as a whole.

DISPOSAL CONSIDERATIONS (ANSI Section 13)

Waste disposal : Dispose in accordance with all applicable regulations. Avoid discharge to natural waters.

REGULATORY INFORMATION (ANSI Section 15)

As of the date of this MSDS, all of the components in this product are listed (or are otherwise exempt from listing) on the TSCA inventory. This product has been classified in accordance with the hazard criteria of the CPR (controlled products regulations) and the MSDS contains all the information required by the CPR.

Physical Data (ANSI Sections 1, 9, and 14)

Product Code	Description	Wt. / Gal.	VOC gr. / ltr.	% Volatile by Volume	Flash Point	Boiling Range	HMIS	DOT, proper shipping name
4306-0110	devguard rust preventative white tint base semi-gloss enamel	10.35	365.66	46.43	105 f	266-417	*320	UN1263,paint,combustible liquid,PGIII
4306-0300	devguard rust preventative intermediate tint base semi-gloss enamel	9.76	371.69	47.21	105 f	266-417	*320	UN1263,paint,combustible liquid,PGIII
4306-0400	devguard rust preventative deep tint base semi-gloss enamel	8.76	376.23	47.84	105 f	266-417	*320	UN1263,paint,combustible liquid,PGIII
4306-0500	devguard rust preventative neutral tint base semi-gloss enamel	9.03	365.47	46.72	105 f	266-417	*320	UN1263,paint,combustible liquid,PGIII

Ingredients Product Codes with % by Weight (ANSI Section 2)

Chemical Name	Common Name	CAS. No.	4306-0110	4306-0300	4306-0400	4306-0500
benzene, ethyl-	ethylbenzene	100-41-4	.1-1.0	.1-1.0	.1-1.0	
benzene, 1,3-dimethyl-	1,3-dimethylbenzene	108-38-3	.1-1.0	.1-1.0	.1-1.0	
ethanol, 2-butoxy-	2-butoxyethanol	111-76-2				.1-1.0
limestone	limestone	1317-65-3	10-20	10-20		10-20
benzene, dimethyl-	xylene	1330-20-7	.1-1.0	.1-1.0	.1-1.0	.1-1.0
kaolin	clay	1332-58-7	1-5		5-10	
titanium oxide	titanium dioxide	13463-67-7	10-20	10-20	1-5	
hexanoic acid, 2-ethyl-, cobalt(2+) salt	cobalt alkanoate	136-52-7	.1-1.0	.1-1.0	.1-1.0	.1-1.0
quartz	quartz	14808-60-7	.1-1.0	.1-1.0		
nepheline syenite	feldspar-type minerals	37244-96-5			10-20	
solvent naphtha (petroleum), medium aliphatic	medium aliphatic solvent naphtha	64742-88-7	10-20	10-20	10-20	5-10
fatty acids, tall oil, polymers with glycerol, pentaerythritol and phthalic anhydride	alkyd resin	66070-62-0				10-20
ceramic materials and wares, chemicals	calcined kaolin clay	66402-68-4				5-10
fatty acids, tall-oil, polymers with isophthalic acid and pentaerythritol	alkyd resin	67746-05-8	1-5		5-10	5-10
fatty acid, c18-unsaturated, dimers, polymers with ethylenediamine, pentaerythritol, phthalic anhydride and tall-oil fatty acids	alkyd resin	68604-95-5	10-20	10-20	10-20	10-20

Ingredients (Continued)

Product Codes with % by Weight (ANSI Section 2)

Chemical Name	Common Name	CAS. No.	4306-0110	4306-0300	4306-0400	4306-0500
lecithins	lecithin	8002-43-5		1-5		
stoddard solvent	mineral spirits	8052-41-3	10-20	10-20	20-30	20-30
benzene,1,2,4-trimethyl-	pseudocumene	95-63-6			.1-1.0	.1-1.0
long oil alkyd resin	long oil alkyd resin	Sup. Conf.	10-20	10-20	10-20	

Chemical Hazard Data

(ANSI Sections 2, 8, 11, and 15)

		ACGIH-TLV				OSHA-PEL				S.R.	S2	S3	CC	H	M	N	I	O
Common Name	CAS. No.	8-Hour TWA	STEL	C	S	8-Hour TWA	STEL	C	S	Std.								
ethylbenzene	100-41-4	100 ppm	125 ppm	not est.	not est.	100 ppm	not est.	not est.	not est.	not est.	n	y	y	y	n	n	y	n
1,3-dimethylbenzene	108-38-3	100 ppm	150 ppm	not est.	not est.	100 ppm	not est.	not est.	not est.	not est.	n	y	y	y	n	n	n	n
2-butoxyethanol	111-76-2	20 ppm	not est.	not est.	not est.	50 ppm	not est.	not est.	y	not est.	n	y	n	n	n	n	n	n
limestone	1317-65-3	10 mg/m3	not est.	not est.	not est.	5 mg/m3	not est.	not est.	not est.	not est.	n	n	n	n	n	n	n	n
xylene	1330-20-7	100 ppm	150 ppm	not est.	not est.	100 ppm	not est.	not est.	not est.	not est.	n	y	y	y	n	n	n	n
clay	1332-58-7	2 mg/m3	not est.	not est.	not est.	5 mg/m3	not est.	not est.	not est.	not est.	n	n	n	n	n	n	n	n
titanium dioxide	13463-67-7	10 mg/m3	not est.	not est.	not est.	10 mg/m3	not est.	not est.	not est.	not est.	n	n	n	n	n	y	y	n
cobalt alkanoate	136-52-7	.02 mg/m3	not est.	not est.	not est.	.05 mg/m3	not est.	not est.	not est.	not est.	n	y	n	y	n	n	n	n
quartz	14808-60-7	.025 mg/m3	not est.	not est.	not est.	0.1 mg/m3	not est.	not est.	not est.	not est.	n	n	n	n	n	y	y	n
feldspar-type minerals	37244-96-5	not est.	not est.	not est.	not est.	not est.	not est.	not est.	not est.	not est.	n	n	n	n	n	n	n	n
medium aliphatic solvent naphtha	64742-88-7	100 ppm	not est.	not est.	not est.	500 x ppm	not est.	not est.	not est.	not est.	n	n	n	n	n	n	n	n
calcined kaolin clay	66402-68-4	not est.	not est.	not est.	not est.	not est.	not est.	not est.	not est.	not est.	n	n	n	n	n	n	n	n
lecithin	8002-43-5	not est.	not est.	not est.	not est.	not est.	not est.	not est.	not est.	not est.	n	n	n	n	n	n	n	n
mineral spirits	8052-41-3	100 ppm	not est.	not est.	not est.	500 ppm	not est.	not est.	not est.	not est.	n	n	n	n	n	n	n	n

Footnotes:

C=Ceiling - Concentration that should not be exceeded, even instantaneously.

S=Skin - Additional exposure, over and above airborn exposure, may result from skin absorption.

n/a=not applicable
not est=not established
CC=CERCLA Chemical

ppm=parts per million
mg/m3=milligrams per cubic meter
Sup Conf=Supplier Confidential

S2=Sara Section 302 EHS
S3=Sara Section 313 Chemical
S.R.Std.=Supplier Recommended Standard

H=Hazardous Air Pollutant, M=Marine Pollutant
P=Pollutant, S=Severe Pollutant
Carcinogenicity Listed By:
N=NTP, I=IARC, O=OSHA, y=yes, n=no

GENERAL DESCRIPTION

SPEEDHIDE Exterior 100% Acrylic Latex Semi-Gloss is a durable, 100% acrylic exterior paint designed for new and repaint applications where durability and ease of application are most important in both the commercial and multi-family markets. This less than 50 g/L VOC paint provides excellent flow and leveling, very good hide and coverage and has excellent resistance to mildew on the paint film. This 100% acrylic workhorse formula also provides excellent adhesion , good block resistance and can be applied at temperatures as low as 35°F (2ºC) extending your painting season. SPEEDHIDE Exterior is recommended on wood, masonry, fiber cement, brick, aluminum siding and ferrous metal.

RECOMMENDED SUBSTRATES

Aluminum Siding	Concrete	Wood
Brick	Ferrous Metal	
Cement Composition Board	Masonry	

CONFORMANCE STANDARDS

VOC compliant in all regulated areas
MPI approval in category #11, Exterior Latex Semi-Gloss, Level 5
Meets MPI Green Performance Standards (GPS-1 and GPS-2)

APPLICATION INFORMATION

Stir thoroughly before using and occasionally when in use. When using more than one can of the same color, intermix to ensure color uniformity. USE WITH ADEQUATE VENTILATION. KEEP OUT OF REACH OF CHILDREN. Read all label and Material Safety Data Sheet (MSDS) information prior to use. MSDS are available through our website or by calling 1-800-441-9695.

Application Equipment: Apply with a high quality brush, roller, paint pad, or by spray equipment. Where necessary, apply a second coat and allow each coat to dry thoroughly before applying the next coat.
Airless Spray: Pressure 2000 psi, tip 0.015” - 0.021”
Spray equipment must be handled with due care and in accordance with manufacturer’s recommendation. High-pressure injection of coatings into the skin by airless equipment may cause serious injury.

Brush: Polyester/Nylon Brush
Roller: 3/16” - 3/8” nap roller cover
Thinning: No thinning is usually required.

Permissible temperatures during application:

Material:	50 to 90ºF	10 to 32ºC
Ambient:	35 to 100ºF	2 to 38ºC
Substrate:	35 to 100ºF	2 to 38ºC

TINTING AND BASE INFORMATION

Refer to the appropriate color formula book, automatic tinting equipment, and or computer color matching system for color formulas and tinting instructions.

6-900XI	White
6-901XI	Pastel Base
6-902XI	Midtone Base*
6-904XI	Ultra Deep Base*

*Must be tinted before use.

Some colors, drastic color changes, or porous substrates may require more than one coat to achieve a uniform finish.

PRODUCT DATA

PRODUCT TYPE:	100% Acrylic Latex
SHEEN:	Semi-Gloss
VOLUME SOLIDS*:	35% +/- 2%
WEIGHT SOLIDS*:	44% +/- 2%
VOC*:	<50 g/L (0.4 lbs./gal.)
WEIGHT/GALLON*:	9.7 lbs. (4.4 kg) +/- 0.2 lbs. (91 g)

*Product data calculated on product 6-901XI.

COVERAGE: Approximately 400 sq. ft./gal. (37 sq. m/3.78L) per U.S. Gallon (3.78L) on smooth, nonporous surfaces.

Wet Film Thickness:	4 mils
Wet Microns:	102
Dry Film Thickness:	1.4 mils
Dry Microns:	35

Coverage figures do not include loss due to surface irregularities and porosity or material loss due to application method or mixing.

DRYING TIME: Dry time @ 77ºF (25ºC); 50% relative humidity.

To Touch:	1 hour
To Recoat:	4 hours
To Full Cure:	30 days

Drying times listed may vary depending on temperature, humidity, film build, color, and air movement.

CLEANUP: Soap and water

DISPOSAL: Contact your local environmental regulatory agency for guidance on disposal of unused product. Do not pour down a drain or storm sewer.

FLASH POINT: Over 200ºF (93ºC)

FEATURES / BENEFITS

Features	Benefits
Less than 50 g/L VOC	Meets the most stringent environmental regulations nationwide
100% acrylic latex	Excellent adhesion and durability
Excellent adhesion	Minimizes peeling and cracking
Provides uniform film and appearance	Hides surface imperfections
Mildew resistant on the paint film	Stays cleaner longer
Good UV and weathering resistance	Looks like new longer
Excellent application properties	Less time for application
Good block resistance	Tack free film / Ideal for doors, doorframes, and windowsills
Easy soap and water cleanup	Safe waterborne formula
MPI approval in Category #11, Exterior Latex Semi-Gloss, Gloss Level 5	Meets strict performance and aesthetic requirements

GENERAL SURFACE PREPARATION

Surfaces to be coated must be dry, clean, sound, and free from all contamination including loose and peeling paint, dirt, grease, oil, wax, concrete curing agents and bond breakers, chalk, efflorescence, mildew, rust, product fines, and dust. Remove loose paint, chalk, and efflorescence by wire brushing, scraping, sanding, and/or pressure washing. Putty all nail holes and caulk all cracks and open seams. Sand all glossy, rough, and patched surfaces. Feather back all rough edges to sound surface by sanding. Prime all bare and porous substrates with an appropriate primer.

WARNING! If you scrape, sand, or remove old paint, you may release lead dust or fumes. LEAD IS TOXIC. EXPOSURE TO LEAD DUST OR FUMES CAN CAUSE SERIOUS ILLNESS, SUCH AS BRAIN DAMAGE, ESPECIALLY IN CHILDREN. PREGNANT WOMEN SHOULD ALSO AVOID EXPOSURE. Wear a properly fitted NIOSH-approved respirator and prevent skin contact to control lead exposure. Clean up carefully with a HEPA vacuum and a wet mop. Before you start, find out how to protect yourself and your family by contacting the USEPA National Lead Information Hotline at 1-800-424-LEAD or log on to www.epa.gov/lead. In Canada contact a regional Health Canada office. Follow these instructions to control exposure to other hazardous substances that may be released during surface preparation.

ALUMINUM SIDING: Siding may present potential adhesion problems. A primer may be required if the original painted surface has degraded to the substrate. Topcoat should be spot applied, allowed to cure overnight, then evaluated for adhesion. If adhesion is good, the application may proceed. Check adhesion by applying a piece of masking tape. When the masking tape is removed, if the coating peels off, the surface must be scuff sanded prior to proceeding to ensure mechanical adhesion.

BRICK: New brick and mortar should cure for at least 30 days and preferably 90 days prior to priming and painting. The pH of the substrate must be less than 10 before priming. Use of an alkali resistant primer is recommended. Painting glazed brick is not recommended due to potential adhesion problems.

CEMENT COMPOSITION BOARD: Cement composition board may present potential adhesion, alkali burn, and efflorescence problems. New board should be aged for at least 30 days prior to priming and painting. The pH of the substrate must be less than 10 and the moisture content must be less than 12% prior to priming and topcoating. All cracks and open seams should be caulked to prevent water penetration. Pre-primed board from the manufacturer may not be uniformly or completely sealed. It is recommended that an alkali resistant primer be applied to ensure complete and uniform sealing prior to topcoating.

CONCRETE and MASONRY: New concrete and masonry should cure for at least 30 days and preferably 90 days prior to priming and painting. The pH of the substrate must be less than 10 before priming. Use of an alkali resistant primer is recommended.

FERROUS METAL: The surface must be cleaned thoroughly to remove any dust, rust, and surface contaminants, and then primed.

WOOD: Unpainted wood or wood in poor condition should be sanded smooth, wiped clean, then primed. Any knots or resinous areas must be primed before painting. Countersink all nails, putty flush with surface, then prime.

RECOMMENDED PRIMERS

Aluminum Siding	17-921
Brick	4-503, 4-603, 17-921
Cement Composition Board	4-503, 4-603
Concrete	4-503, 4-603, 17-921
Ferrous Metal	90-712, 90-912
Masonry	4-503, 4-603, 17-921
Wood	6-609, 17-921, 72-1, PP335, PP515

PACKAGING

1-Gallon (3.78 L)
5-Gallon (18.9 L)

LIMITATIONS OF USE

FOR EXTERIOR USE ONLY. Apply only when air and surface temperatures are 35ºF (2ºC) and when the air and surface temperatures will remain above 35ºF (2ºC) for the next 24 hours. Avoid exterior application late in the day when dew and condensation are likely to form or when rain or snow are expected.

Not recommended for use on steps, floors, or vinyl surfaces. PROTECT FROM FREEZING.

While this product provides a mildew resistant coating, growth may still occur if the substrate is not properly prepared prior to painting and/or if the substrate is consistently exposed to conditions conducive to mold, mildew, and algae. Examples of these conditions include, but are not limited to, under eaves, behind shrubbery and trees, and in areas that are consistently damp with little to no direct sunlight.

PPG Architectural Finishes, Inc. believes the technical data presented is currently accurate: however, no guarantee of accuracy, comprehensiveness, or performance is given or implied. Improvements in coatings technology may cause future technical data to vary from what is in this bulletin. For complete, up-to-date technical information, visit our web site or call 1-800-441-9695.

PPG Industries, Inc.
Architectural Coatings
One PPG Place
Pittsburgh, PA 15272
www.ppgpittsburghpaints.com
www.ppgporterpaints.com

Technical Services
1-800-441-9695
1-888-807-5123 fax

Architect/Specifier
1-888-PPG-IDEA

PPG Canada, Inc.
Architectural Coatings
4 Kenview Blvd
Brampton, ON L6T 5E4

B3.30 4/2013
(Supersedes 1/2012)

Made in the USA

Material Safety Data Sheet

Date of issue 21 November 2014
Version 15.01

1 . Product and company identification

Product name : EXT S/G ACRYLIC LTX WHITE

Code : 6-900XI

Supplier : PPG Industries, Inc.
One PPG Place
Pittsburgh, PA 15272

Emergency telephone number : (412) 434-4515 (U.S.)
(514) 645-1320 (Canada)
01-800-00-21-400 (Mexico)

Technical Phone Number : 1-800-441-9695 (8:00 am to 5:00 pm EST)

2 . Hazards identification

Emergency overview : WARNING!

MAY BE HARMFUL IF INHALED OR SWALLOWED. CONTAINS MATERIAL THAT MAY CAUSE TARGET ORGAN DAMAGE, BASED ON ANIMAL DATA.

Use only with adequate ventilation. Keep container tightly closed and sealed until ready for use. Wash thoroughly after handling.

Potential acute health effects

Inhalation : May be harmful if inhaled.

Ingestion : May be harmful if swallowed.

Skin : No known significant effects or critical hazards.

Eyes : No known significant effects or critical hazards.

Over-exposure signs/symptoms

The inhalation of airborne droplets or aerosols may cause irritation of the respiratory tract. Ingestion may cause nausea, weakness and central nervous system effects. If splashed in the eyes, the liquid may cause irritation and reversible damage. Acrylate components of the mixture have irritating properties. Prolonged or repeated contact with skin or mucous membrane may result in irritation symptoms, such as redness, blistering, dermatitis etc. May cause allergic skin reactions with repeated exposure.

Medical conditions aggravated by over-exposure : Pre-existing disorders involving any target organs mentioned in this MSDS as being at risk may be aggravated by over-exposure to this product.

This Material Safety Data Sheet has been prepared in accordance with Canada's Workplace Hazardous Materials Information System (WHMIS) and the OSHA Hazard Communication Standard (29 CFR 1910.1200).

See toxicological information (Section 11)

3 . Composition/information on ingredients

Name	CAS number	%
titanium dioxide	13463-67-7	10 - 30

There are no additional ingredients present which, within the current knowledge of the supplier and in the concentrations applicable, are classified as hazardous to health or the environment and hence require reporting in this section.

4 . First aid measures

If ingestion, irritation, any type of overexposure or symptoms of overexposure occur during or persists after use of this product, contact a POISON CONTROL CENTER, EMERGENCY ROOM OR PHYSICIAN immediately; have Material Safety Data Sheet information available. Never give anything by mouth to an unconscious or convulsing person.

Eye contact : Check for and remove any contact lenses. Immediately flush eyes with running water for at least 15 minutes, keeping eyelids open. Seek immediate medical attention.

In case of accidental eye contact, avoid concurrent exposure to the sun or other sources of UV light which may increase the sensitivity of the eyes.

Skin contact : Remove contaminated clothing and shoes. Wash skin thoroughly with soap and water or use recognized skin cleanser. Do NOT use solvents or thinners.

In case of accidental skin contact, avoid concurrent exposure to the sun or other sources of UV light which may increase the sensitivity of skin.

Inhalation : Remove to fresh air. Keep person warm and at rest. If not breathing, if breathing is irregular or if respiratory arrest occurs, provide artificial respiration or oxygen by trained personnel.

Ingestion : If swallowed, seek medical advice immediately and show this container or label. Keep person warm and at rest. Do NOT induce vomiting.

Notes to physician : No specific treatment. Treat symptomatically. Contact poison treatment specialist immediately if large quantities have been ingested or inhaled.

5 . Fire-fighting measures

Flammability of the product : In a fire or if heated, a pressure increase will occur and the container may burst.

Extinguishing media

Suitable : Use an extinguishing agent suitable for the surrounding fire.

Not suitable : None known.

Special exposure hazards : Promptly isolate the scene by removing all persons from the vicinity of the incident if there is a fire. No action shall be taken involving any personal risk or without suitable training.

Hazardous combustion products : Decomposition products may include the following materials:
metal oxide/oxides

Special protective equipment for fire-fighters : Fire-fighters should wear appropriate protective equipment and self-contained breathing apparatus (SCBA) with a full face-piece operated in positive pressure mode.

6 . Accidental release measures

Personal precautions : No action shall be taken involving any personal risk or without suitable training. Evacuate surrounding areas. Keep unnecessary and unprotected personnel from entering. Do not touch or walk through spilled material. Avoid breathing vapor or mist. Provide adequate ventilation. Wear appropriate respirator when ventilation is inadequate. Put on appropriate personal protective equipment (see Section 8).

Environmental precautions : Avoid dispersal of spilled material and runoff and contact with soil, waterways, drains and sewers. Inform the relevant authorities if the product has caused environmental pollution (sewers, waterways, soil or air).

Large spill : Stop leak if without risk. Move containers from spill area. Approach release from upwind. Prevent entry into sewers, water courses, basements or confined areas. Wash spillages into an effluent treatment plant or proceed as follows. Contain and collect spillage with non-combustible, absorbent material e.g. sand, earth, vermiculite or diatomaceous earth and place in container for disposal according to local regulations (see Section 13). Dispose of via a licensed waste disposal contractor. Contaminated absorbent material may pose the same hazard as the spilled product. Note: see Section 1 for emergency contact information and Section 13 for waste disposal.

6 . Accidental release measures

Small spill : Stop leak if without risk. Move containers from spill area. Dilute with water and mop up if water-soluble or absorb with an inert dry material and place in an appropriate waste disposal container. Dispose of via a licensed waste disposal contractor.

7 . Handling and storage

Handling : Put on appropriate personal protective equipment (see Section 8). Eating, drinking and smoking should be prohibited in areas where this material is handled, stored and processed. Do not swallow. Do not get in eyes or on skin or clothing. Avoid breathing vapor or mist. If during normal use the material presents a respiratory hazard, use only with adequate ventilation or wear appropriate respirator. Keep in the original container or an approved alternative made from a compatible material, kept tightly closed when not in use. Empty containers retain product residue and can be hazardous. Do not reuse container. If this material is part of a multiple component system, read the Material Safety Data Sheet(s) for the other component or components before blending as the resulting mixture may have the hazards of all of its parts.

Storage : Store in accordance with local regulations. Store in original container protected from direct sunlight in a dry, cool and well-ventilated area, away from incompatible materials (see Section 10) and food and drink. Keep container tightly closed and sealed until ready for use. Containers that have been opened must be carefully resealed and kept upright to prevent leakage. Do not store in unlabeled containers. Use appropriate containment to avoid environmental contamination. Do not store below the following temperature: 32F / 0C.

8 . Exposure controls/personal protection

Name	Result	ACGIH	OSHA	Ontario	Mexico	PPG
titanium dioxide	TWA	10 mg/m³	15 mg/m³ TD	10 mg/m³ TD	10 mg/m³ (as Ti)	Not established
	STEL	Not established	Not established	Not established	20 mg/m³ (as Ti)	Not established

Key to abbreviations

A	=	Acceptable Maximum Peak	S	=	Potential skin absorption
ACGIH	=	American Conference of Governmental Industrial Hygienists.	SR	=	Respiratory sensitization
C	=	Ceiling Limit	SS	=	Skin sensitization
F	=	Fume	STEL	=	Short term Exposure limit values
IPEL	=	Internal Permissible Exposure Limit	TD	=	Total dust
OSHA	=	Occupational Safety and Health Administration.	TLV	=	Threshold Limit Value
R	=	Respirable	TWA	=	Time Weighted Average
Z	=	OSHA 29CFR 1910.1200 Subpart Z - Toxic and Hazardous Substances			

Consult local authorities for acceptable exposure limits.

Recommended monitoring procedures : If this product contains ingredients with exposure limits, personal, workplace atmosphere or biological monitoring may be required to determine the effectiveness of the ventilation or other control measures and/or the necessity to use respiratory protective equipment. Reference should be made to appropriate monitoring standards. Reference to national guidance documents for methods for the determination of hazardous substances will also be required.

Engineering measures : If user operations generate dust, fumes, gas, vapor or mist, use process enclosures, local exhaust ventilation or other engineering controls to keep worker exposure to airborne contaminants below any recommended or statutory limits.

Hygiene measures : Wash hands, forearms and face thoroughly after handling chemical products, before eating, smoking and using the lavatory and at the end of the working period. Appropriate techniques should be used to remove potentially contaminated clothing. Wash contaminated clothing before reusing. Ensure that eyewash stations and safety showers are close to the workstation location.

Personal protection

8 . Exposure controls/personal protection

Eyes : Safety glasses with side shields.

Hands : Chemical-resistant, impervious gloves complying with an approved standard should be worn at all times when handling chemical products if a risk assessment indicates this is necessary. Considering the parameters specified by the glove manufacturer, check during use that the gloves are still retaining their protective properties. It should be noted that the time to breakthrough for any glove material may be different for different glove manufacturers. In the case of mixtures, consisting of several substances, the protection time of the gloves cannot be accurately estimated.

Gloves : polyethylene

Respiratory : If workers are exposed to concentrations above the exposure limit, they must use appropriate, certified respirators. Use a properly fitted, air-purifying or air-fed respirator complying with an approved standard if a risk assessment indicates this is necessary. Respirator selection must be based on known or anticipated exposure levels, the hazards of the product and the safe working limits of the selected respirator.

Skin : Personal protective equipment for the body should be selected based on the task being performed and the risks involved and should be approved by a specialist before handling this product.

Environmental exposure controls : Emissions from ventilation or work process equipment should be checked to ensure they comply with the requirements of environmental protection legislation. In some cases, fume scrubbers, filters or engineering modifications to the process equipment will be necessary to reduce emissions to acceptable levels.

9 . Physical and chemical properties

Physical state : Liquid.

Flash point : Closed cup: >93.33°C (>200°F)

Material supports combustion. : Yes.

Color : Not available.

Odor : Not available.

pH : Not available.

Boiling/condensation point : >37.78°C (>100°F)

Melting/freezing point : Not available.

Specific gravity : 1.24

Density (lbs / gal) : 10.35

Vapor pressure : 2.3 kPa (17.5 mm Hg) [room temperature]

Vapor density : Not available.

Volatility : 64% (v/v), 52.13% (w/w)

Evaporation rate : 0.35 (butyl acetate = 1)

Solubility : Insoluble in the following materials: cold water.

Partition coefficient: n-octanol/water : Not available.

% Solid. (w/w) : 47.87

10 . Stability and reactivity

Stability : This mixture contains materials which are unstable under the following conditions: strong UV sources free radical initiators peroxides strong alkalis strong acids reactive metals These could cause the product to polymerize exothermically. Unintentional contact with them should be avoided. Stable under recommended storage and handling conditions (see Section 7).

Conditions to avoid : No specific data.

Materials to avoid : Reactive or incompatible with the following materials:,acids,oxidizing materials,strong alkalis

Hazardous decomposition products : Under normal conditions of storage and use, hazardous decomposition products should not be produced.

Hazardous polymerization : Under normal conditions of storage and use, hazardous polymerization will not occur.

11 . Toxicological information

Acute toxicity

Product/ingredient name	Result	Species	Dose	Exposure
titanium dioxide	LD50 Oral	Rat	>10 g/kg	-

Conclusion/Summary : Not available.

Chronic toxicity

Conclusion/Summary : Not available.

Target organs : Contains material which may cause damage to the following organs: upper respiratory tract.

Carcinogenicity

Carcinogenicity : Contains material which may cause cancer, based on animal data. Risk of cancer depends on duration and level of exposure.

Classification

Product/ingredient name	ACGIH	IARC	NTP
titanium dioxide	A4	2B	-

Carcinogen Classification code:
ACGIH: A1, A2, A3, A4, A5
IARC: 1, 2A, 2B, 3, 4
NTP: Proven, Possible
Not listed or regulated as a carcinogen: -

12 . Ecological information

Environmental effects : No known significant effects or critical hazards.

Aquatic ecotoxicity

Product/ingredient name	Result	Species	Exposure
titanium dioxide	Acute LC50 >100 mg/l Fresh water	Daphnia - Daphnia magna	48 hours

13 . Disposal considerations

Waste disposal : The generation of waste should be avoided or minimized wherever possible. Disposal of this product, solutions and any by-products should at all times comply with the requirements of environmental protection and waste disposal legislation and any regional local authority requirements. Dispose of surplus and non-recyclable products via a licensed waste disposal contractor. Waste should not be disposed of untreated to the sewer unless fully compliant with the requirements of all authorities with jurisdiction. Waste packaging should be recycled. Incineration or landfill should only be considered when recycling is not feasible. This material and its container must be disposed of in a safe way. Care should be taken when handling emptied containers that have not been cleaned or rinsed out. Empty containers or liners may retain some product residues. Avoid dispersal of spilled material and runoff and contact with soil, waterways, drains and sewers.

Disposal should be in accordance with applicable regional, national and local laws and regulations.

Refer to Section 7: HANDLING AND STORAGE and Section 8: EXPOSURE CONTROLS/PERSONAL PROTECTION for additional handling information and protection of employees. Section 6. Accidental release measures

14. Transport information

	DOT	TDG	Mexico	IMDG
UN number	Not regulated.	Not regulated.	Not regulated.	Not regulated.
UN proper shipping name	-	-	-	-
Transport hazard class(es)	-	-	-	-
Packing group	-	-	-	-
Environmental hazards	No.	No.	No.	No.
Marine pollutant substances	Not applicable.	Not applicable.	Not applicable.	Not applicable.

Additional information

DOT : None identified.
TDG : None identified.
Mexico : None identified.
IMDG : None identified.

Special precautions for user : **Transport within user's premises:** always transport in closed containers that are upright and secure. Ensure that persons transporting the product know what to do in the event of an accident or spillage.

15 . Regulatory information

United States inventory (TSCA 8b) : All components are listed or exempted.
Australia inventory (AICS) : At least one component is not listed.
Canada inventory (DSL) : All components are listed or exempted.
China inventory (IECSC) : At least one component is not listed.
Europe inventory (REACH) : Please contact your supplier for information on the inventory status of this material.
Japan inventory (ENCS) : At least one component is not listed.

15 . Regulatory information

Korea inventory (KECI) : At least one component is not listed.

New Zealand (NZIoC) : At least one component is not listed.

Philippines inventory (PICCS) : At least one component is not listed.

United States

SARA 302/304: No products were found.

SARA 311/312 SDS Distribution - Chemical Inventory - Hazard Identification:

Chemical name	CAS #	Acute	Chronic	Fire	Reactive	Pressure
titanium dioxide	13463-67-7	N	Y	N	N	N
Product as-supplied :		N	Y	N	N	N

Additional environmental information is contained on the Environmental Data Sheet for this product, which can be obtained from your PPG representative.

Canada

WHMIS (Canada) : Class D-2A: Material causing other toxic effects (Very toxic).

Mexico

Classification

Flammability : 1 **Health** : 1 **Reactivity** : 0

16 . Other information

Hazardous Material Information System (U.S.A.)

Health : 1 * **Flammability** : 1 **Physical hazards** : 0

(*) - Chronic effects

Caution: HMIS® ratings are based on a 0-4 rating scale, with 0 representing minimal hazards or risks, and 4 representing significant hazards or risks Although HMIS® ratings are not required on MSDSs under 29 CFR 1910. 1200, the preparer may choose to provide them. HMIS® ratings are to be used with a fully implemented HMIS® program. HMIS® is a registered mark of the National Paint & Coatings Association (NPCA). HMIS® materials may be purchased exclusively from J. J. Keller (800) 327-6868.

The customer is responsible for determining the PPE code for this material.

National Fire Protection Association (U.S.A.)

Health : 1 **Flammability** : 1 **Instability** : 0

Date of previous issue : **7/26/2014.**

Organization that prepared the MSDS : EHS

Indicates information that has changed from previously issued version.

Disclaimer

The information contained in this data sheet is based on present scientific and technical knowledge. The purpose of this information is to draw attention to the health and safety aspects concerning the products supplied by PPG, and to recommend precautionary measures for the storage and handling of the products. No warranty or guarantee is given in respect of the properties of the products. No liability can be accepted for any failure to observe the precautionary measures described in this data sheet or for any misuse of the products.

AMERLOCK® 400BF

February 2012
Revision of November 2011

DESCRIPTION

Epoxy Masonry Block Filler

PRINCIPAL CHARACTERISTICS

- Low VOC
- Suitable for wet environments

COLOR AND GLOSS

Off White

BASIC DATA

Volume solids	75% ± 3%
VOC	1.66 lbs/gal (200 g/L)
Recommended Dry film thickness (per coat)	10 – 20 mils (250 – 500 microns)
Theoretical Spread Rate	@ 1 mil dft 1200 ft²/gallon @ 20 mils dft 60 ft²/gallon
Components	2
Shelf Life	3 years from date of manufacture

SURFACE PREPARATION

Masonry

- Clean surface in accordance with ASTM D 4261 requirements to remove any surface contaminants and loose particles. Allow surface to dry until it passes a plastic sheet test in accordance with ASTM D 4263. Moisture levels (including grout) should be a maximum of 12%.

Concrete

- Clean surface in accordance with ASTM D 4258. Abrade the surface in accordance with ASTM D 4259. The surface should pass a plastic sheet test as per ASTM D 4263. Fill large voids, surface cracks, and bug holes with *Amercoat* 114A epoxy filler, or *Amercoat* 915 Acrylic Cement

ENVIRONMENTAL CONDITIONS

Ambient temperatures	40°F to 122°F (5°C to 50°C)
Material temperatures	50°F to 90°F (10°C to 32ºC)
Relative humidity	0 – 85%, surface must be free of visible moisture. For immersion service and for optimum performance, surface temperature must be at least 5°F above the dew point temperature.
Surface temperature	50°F to 122°F (10°C to 50°C)
General air quality	Area should be sheltered from airborne particulates and pollutants. Avoid combustion gases or other sources of carbon dioxide that may promote amine blush. Ensure good ventilation during application and curing. Provide shelter to prevent wind from affecting spray patterns.

INSTRUCTIONS FOR USE

Mixing ratio by volume

1 parts base to 1 part hardener

Pre-mix pigmented components with a pneumatic air mixing at moderate speeds to homogenize the container. Add hardener to base and agitate with a power mixer for 1-2 minutes until completely dispersed.

Pot life

	50°F	70°F	90°F
400BF	4 hours	2.5 hours	1.5 hours

Induction time	None required
Airless spray	45:1 pump or larger, 0.017-0.019 fluid tip Can be sprayed with plural component application equipment. Spray a wet coat over block surface. Back roll with a saturated roller to work into block porosity.
Brush & roll	Use a high quality natural bristle brush and / or solvent resistant, 3/8" nap roller. Ensure brush / roller is well loaded to avoid air entrainment. Multiple coats may be necessary to achieve adequate film build.
Thinner	*Amercoat* 65, *Amercoat* 101
Cleaning solvent	*Amercoat* 12 Cleaner or *Amercoat* 65 thinner (xylene)
Primers	Direct to substrate
Topcoats	*Amercoat* 450-series polyurethanes, Amershield, *Pitthane* polyurethanes, *PSX* 700, *PSX* One, *Amercoat* 220-series acrylics, *Pitt Tech*, *Pitt Tech* Plus, PPG Epoxies, *Aquapon* WB
Safety precautions	For paint and recommended thinners see safety sheet 1430, 1431 and relevant material safety data sheets This is a solvent borne paint and care should be taken to avoid inhalation of spray mist or vapor as well as contact between the wet paint and exposed skin or eyes.

DRY/CURE TIMES*

Amerlock 400BF @ 10 mils dft

	50°F	70°F	90°F
Dry to touch	6 hours	3 hours	1 hour
Dry through	18 hours	9 hours	5 hours
Dry to recoat / topcoat	18 hours	9 hours	5 hours
Max recoat, self	120 days	90 days	30 days
Max topcoat, urethanes, *PSX*	30 days	21 days	14 days
Max topcoat, acrylics	7 days	4 days	2 days
Full cure (below grade applications)*	14 days	7 days	4 days

* *Dry times are dependent on air and surface temperatures as well as film thickness, ventilation, and relative humidity. Maximum recoating time is highly dependent upon actual surface temperatures – not simply air temperatures. Surface temperatures should be monitored, especially with sun-exposed or otherwise heated surfaces. Higher surface temperatures shorten the maximum recoat window.*

Surface must be clean and dry. Any contamination must be identified and removed. A detergent wash with Prep 88 or equivalent is required prior to application of topcoats after 30 days of exposure. However, particular attention must be paid to surfaces exposed to sunlight where chalking may be present. In those situations, a further degree of cleaning may be required. PPG Technical Service can advise on suitable cleaning methods. If maximum recoat/topcoat time is exceeded, then roughen surface.

References

PRODUCT QUALIFICATIONS

- Compliant with USDA Incidental Food Contact Requirements
- NFPA Class A for Flame Spread and Smoke Development
- MPI Category #116
- LEED's compliant for Anti-corrosive Paint category
- Nuclear Service Level 2 (ANSI N 5.12, ANSI N 101.2)

AVAILABILITY

Packaging

Available in 2-gallon and 5-gallon kits
2-gallon kits have 1 full gallon of base and 1 full gallon of hardener
5 gallon kits have 2.5 gallons of base and 2.5 gallons of hardener

AMERLOCK 400BF

Product codes	AK400B-30	Base component
	AK400B-B	Hardener component

Worldwide statement

While it is always the aim of PPG Protective & Marine Coatings to supply the same product on a worldwide basis, slight modification of the product is sometimes necessary to comply with local or national rules/circumstances. Under these circumstances an alternative product data sheet is used.

WARRANTY STATEMENT

PPG warrants (i) its title to the products, (ii) that the quality of the product(s) conform to PPG's specifications for such products in effect at the time of manufacture and (iii) that the products shall be delivered free of the rightful claim of any third person for infringement of any U.S. patent covering the products. THESE ARE THE ONLY WARRANTIES PPG MAKES AND ALL OTHER EXPRESS OR IMPLIED WARRANTIES, UNDER STATUTE OR ARISING OTHERWISE IN LAW, FROM A COURSE OF DEALING OR USAGE OF TRADE, INCLUDING WITHOUT LIMITATION, ANY OTHER WARRANTY OF FITNESS FOR A PARTICULAR PURPOSE OR USE, ARE DISCLAIMED BY PPG.

The information in this data sheet is based upon laboratory tests PPG believes to be accurate and is intended for guidance only. PPG may modify the information contained herein at any time as a result of practical experience and continuous product development. All recommendations or suggestions relating to the use of PPG products, whether in technical documentation, or in response to a specific inquiry, or otherwise, are based on data, which to the best of PPG's knowledge, are reliable. The products and information are designed for users having the requisite knowledge and industrial skills and it is the end-user's responsibility to determine the suitability of the product for its intended use.

PPG has no control over either the quality or condition of the substrate, or the many factors affecting the use and application of the product. Therefore, PPG does not accept any liability arising from loss, injury or damage resulting from such use or the contents of this data sheet (unless there are written agreements stating otherwise).

This data sheet supersedes all previous versions and it is the user's responsibility to ensure that this data sheet is current prior to using the product. The English text of this document shall prevail over any translation thereof.

LIMITATION OF LIABILITY

The information in this data sheet is based upon laboratory tests we believe to be accurate and is intended for guidance only. All recommendations or suggestions relating to the use of the products made by PPG Protective & Marine Coatings, whether in technical documentation, or in response to a specific enquiry, or otherwise, are based on data which to the best of our knowledge are reliable. The products and information are designed for users having the requisite knowledge and industrial skills and it is the end-user's responsibility to determine the suitability of the product for its intended use.

PPG Protective & Marine Coatings has no control over either the quality or condition of the substrate, or the many factors affecting the use and application of the product. PPG Protective & Marine Coatings does therefore not accept any liability arising from loss, injury or damage resulting from such use or the contents of this data sheet (unless there are written stating otherwise).

The data contained herein are liable to modification as a result of practical experience and continuous product development.

This data sheet replaces and annuls all previous issues and it is therefore the user's responsibility to ensure that this sheet is current prior to using the product. The current data sheets are maintained at www.ppgpmc.com

The English text of this document shall prevail over any translation thereof.

SAFETY DATA SHEET

Date of issue/Date of revision 4 September 2016
Version 8

Section 1. Identification

Product name : AMERLOCK 400BF WHITE RESIN
Product code : 00333706
Other means of identification : Not available.
Product type : Liquid.

Relevant identified uses of the substance or mixture and uses advised against

Product use : Industrial applications, Used by spraying.
Use of the substance/ mixture : Coating.
Uses advised against : Not applicable.

Manufacturer : PPG Industries, Inc.
One PPG Place
Pittsburgh, PA 15272
Emergency telephone number : (412) 434-4515 (U.S.)
(514) 645-1320 (Canada)
01-800-00-21-400 (Mexico)
Technical Phone Number : 888-977-4762

Section 2. Hazards identification

OSHA/HCS status : This material is considered hazardous by the OSHA Hazard Communication Standard (29 CFR 1910.1200).
Classification of the substance or mixture : FLAMMABLE LIQUIDS - Category 3
SKIN IRRITATION - Category 2
EYE IRRITATION - Category 2A
SKIN SENSITIZATION - Category 1
CARCINOGENICITY - Category 1A
SPECIFIC TARGET ORGAN TOXICITY (REPEATED EXPOSURE) (central nervous system (CNS), kidneys and liver) - Category 1
Percentage of the mixture consisting of ingredient(s) of unknown toxicity: 40.8%

GHS label elements
Hazard pictograms :

Section 2. Hazards identification

Signal word : Danger

Hazard statements : Flammable liquid and vapor.
Causes serious eye irritation.
Causes skin irritation.
May cause an allergic skin reaction.
May cause cancer.
Causes damage to organs through prolonged or repeated exposure. (central nervous system (CNS), kidneys, liver)

Precautionary statements

Prevention : Obtain special instructions before use. Do not handle until all safety precautions have been read and understood. Wear protective gloves. Wear eye or face protection. Wear protective clothing. Keep away from heat, hot surfaces, sparks, open flames and other ignition sources. No smoking. Use explosion-proof electrical, ventilating, lighting and all material-handling equipment. Use only non-sparking tools. Take precautionary measures against static discharge. Keep container tightly closed. Do not breathe vapor. Do not eat, drink or smoke when using this product. Wash hands thoroughly after handling. Contaminated work clothing must not be allowed out of the workplace.

Response : Get medical attention if you feel unwell. IF exposed or concerned: Get medical attention. IF ON SKIN (or hair): Take off immediately all contaminated clothing. Rinse skin with water or shower. IF ON SKIN: Wash with plenty of soap and water. Wash contaminated clothing before reuse. If skin irritation or rash occurs: Get medical attention. IF IN EYES: Rinse cautiously with water for several minutes. Remove contact lenses, if present and easy to do. Continue rinsing. If eye irritation persists: Get medical attention.

Storage : Store locked up. Store in a well-ventilated place. Keep cool.

Disposal : Dispose of contents and container in accordance with all local, regional, national and international regulations.

Supplemental label elements : Sanding and grinding dusts may be harmful if inhaled. This product contains crystalline silica which can cause lung cancer or silicosis. The risk of cancer depends on the duration and level of exposure to dust from sanding surfaces or mist from spray applications. Repeated exposure to high vapor concentrations may cause irritation of the respiratory system and permanent brain and nervous system damage. Inhalation of vapor/aerosol concentrations above the recommended exposure limits causes headaches, drowsiness and nausea and may lead to unconsciousness or death. Avoid contact with skin and clothing. Wash thoroughly after handling. Emits toxic fumes when heated.

Hazards not otherwise classified : Prolonged or repeated contact may dry skin and cause irritation.

Section 3. Composition/information on ingredients

Substance/mixture : Mixture

Product name : AMERLOCK 400BF WHITE RESIN

Section 3. Composition/information on ingredients

Ingredient name	%	CAS number
Epoxy resin (MW ≤ 700)	≥20 - ≤50	25068-38-6
crystalline silica, respirable powder (<10 microns)	≥20 - ≤50	14808-60-7
Mica-group minerals	≥5.0 - ≤10	12001-26-2
Pyrophyllite	≥5.0 - ≤10	12269-78-2
titanium dioxide	≥5.0 - ≤10	13463-67-7
4-chloro-α,α,α-trifluorotoluene	≥1.0 - ≤5.0	98-56-6
Solvent naphtha (petroleum), light aromatic	≥1.0 - ≤4.2	64742-95-6
xylene	≥1.0 - ≤4.2	1330-20-7
Kaolin	≥1.0 - ≤5.0	1332-58-7
1,2,4-trimethylbenzene	≥0.10 - ≤2.1	95-63-6
ethylbenzene	<1.0	100-41-4

SUB codes represent substances without registered CAS Numbers.

Any concentration shown as a range is to protect confidentiality or is due to batch variation.

There are no additional ingredients present which, within the current knowledge of the supplier and in the concentrations applicable, are classified as hazardous to health or the environment and hence require reporting in this section.

Occupational exposure limits, if available, are listed in Section 8.

Section 4. First aid measures

If ingestion, irritation, any type of overexposure or symptoms of overexposure occur during or persists after use of this product, contact a POISON CONTROL CENTER, EMERGENCY ROOM OR PHYSICIAN immediately; have Safety Data Sheet information available. Never give anything by mouth to an unconscious or convulsing person.

Description of necessary first aid measures

Eye contact : Remove contact lenses, irrigate copiously with clean, fresh water, holding the eyelids apart for at least 10 minutes and seek immediate medical advice.

Inhalation : Remove to fresh air. Keep person warm and at rest. If not breathing, if breathing is irregular or if respiratory arrest occurs, provide artificial respiration or oxygen by trained personnel.

Skin contact : Remove contaminated clothing and shoes. Wash skin thoroughly with soap and water or use recognized skin cleanser. Do NOT use solvents or thinners.

Ingestion : If swallowed, seek medical advice immediately and show this container or label. Keep person warm and at rest. Do NOT induce vomiting.

Most important symptoms/effects, acute and delayed

Potential acute health effects

Eye contact : Causes serious eye irritation.

Inhalation : No known significant effects or critical hazards.

Skin contact : Causes skin irritation. Defatting to the skin. May cause an allergic skin reaction.

Ingestion : No known significant effects or critical hazards.

Over-exposure signs/symptoms

Eye contact : Adverse symptoms may include the following:
pain or irritation
watering
redness

Section 4. First aid measures

Inhalation : No specific data.

Skin contact : Adverse symptoms may include the following:
irritation
redness
dryness
cracking

Ingestion : No specific data.

Indication of immediate medical attention and special treatment needed, if necessary

Notes to physician : In case of inhalation of decomposition products in a fire, symptoms may be delayed. The exposed person may need to be kept under medical surveillance for 48 hours.

Specific treatments : No specific treatment.

Protection of first-aiders : No action shall be taken involving any personal risk or without suitable training. If it is suspected that fumes are still present, the rescuer should wear an appropriate mask or self-contained breathing apparatus. It may be dangerous to the person providing aid to give mouth-to-mouth resuscitation. Wash contaminated clothing thoroughly with water before removing it, or wear gloves.

See toxicological information (Section 11)

Section 5. Fire-fighting measures

Extinguishing media

Suitable extinguishing media : Use dry chemical, CO_2, water spray (fog) or foam.

Unsuitable extinguishing media : Do not use water jet.

Specific hazards arising from the chemical : Flammable liquid and vapor. In a fire or if heated, a pressure increase will occur and the container may burst, with the risk of a subsequent explosion. Vapors may accumulate in low or confined areas or travel a considerable distance to a source of ignition and flash back. Runoff to sewer may create fire or explosion hazard. This material is toxic to aquatic life with long lasting effects. Fire water contaminated with this material must be contained and prevented from being discharged to any waterway, sewer or drain.

Hazardous thermal decomposition products : Decomposition products may include the following materials:
carbon dioxide
carbon monoxide
halogenated compounds
carbonyl halides
metal oxide/oxides

Special protective actions for fire-fighters : Promptly isolate the scene by removing all persons from the vicinity of the incident if there is a fire. No action shall be taken involving any personal risk or without suitable training. Move containers from fire area if this can be done without risk. Use water spray to keep fire-exposed containers cool.

Section 5. Fire-fighting measures

Special protective equipment for fire-fighters : Fire-fighters should wear appropriate protective equipment and self-contained breathing apparatus (SCBA) with a full face-piece operated in positive pressure mode.

Section 6. Accidental release measures

Personal precautions, protective equipment and emergency procedures

For non-emergency personnel : No action shall be taken involving any personal risk or without suitable training. Evacuate surrounding areas. Keep unnecessary and unprotected personnel from entering. Do not touch or walk through spilled material. Shut off all ignition sources. No flares, smoking or flames in hazard area. Avoid breathing vapor or mist. Provide adequate ventilation. Wear appropriate respirator when ventilation is inadequate. Put on appropriate personal protective equipment.

For emergency responders : If specialized clothing is required to deal with the spillage, take note of any information in Section 8 on suitable and unsuitable materials. See also the information in "For non-emergency personnel".

Environmental precautions : Avoid dispersal of spilled material and runoff and contact with soil, waterways, drains and sewers. Inform the relevant authorities if the product has caused environmental pollution (sewers, waterways, soil or air).

Methods and materials for containment and cleaning up

Small spill : Stop leak if without risk. Move containers from spill area. Use spark-proof tools and explosion-proof equipment. Dilute with water and mop up if water-soluble. Alternatively, or if water-insoluble, absorb with an inert dry material and place in an appropriate waste disposal container. Dispose of via a licensed waste disposal contractor.

Large spill : Stop leak if without risk. Move containers from spill area. Use spark-proof tools and explosion-proof equipment. Approach release from upwind. Prevent entry into sewers, water courses, basements or confined areas. Wash spillages into an effluent treatment plant or proceed as follows. Contain and collect spillage with non-combustible, absorbent material e.g. sand, earth, vermiculite or diatomaceous earth and place in container for disposal according to local regulations (see Section 13). Dispose of via a licensed waste disposal contractor. Contaminated absorbent material may pose the same hazard as the spilled product. Note: see Section 1 for emergency contact information and Section 13 for waste disposal.

Section 7. Handling and storage

Precautions for safe handling

Protective measures : Put on appropriate personal protective equipment (see Section 8). Persons with a history of skin sensitization problems should not be employed in any process in which this product is used. Avoid exposure - obtain special instructions before use. Do not handle until all safety precautions have been read and understood. Do not get in eyes or on skin or clothing. Do not breathe vapor or mist. Do not ingest. Use only with adequate ventilation. Wear appropriate respirator when ventilation is inadequate. Do not enter storage areas and confined spaces unless adequately ventilated. Keep in the original container or an approved alternative made from a compatible material, kept tightly closed when not in use. Store and use away from heat, sparks, open flame or any other ignition source. Use explosion-proof electrical (ventilating, lighting and

Section 7. Handling and storage

material handling) equipment. Use only non-sparking tools. Take precautionary measures against electrostatic discharges. Empty containers retain product residue and can be hazardous. Do not reuse container.

Special precautions : Vapors may accumulate in low or confined areas or travel a considerable distance to a source of ignition and flash back. Vapors are heavier than air and may spread along floors. If this material is part of a multiple component system, read the Safety Data Sheet(s) for the other component or components before blending as the resulting mixture may have the hazards of all of its parts.

Advice on general occupational hygiene : Eating, drinking and smoking should be prohibited in areas where this material is handled, stored and processed. Workers should wash hands and face before eating, drinking and smoking. Remove contaminated clothing and protective equipment before entering eating areas. See also Section 8 for additional information on hygiene measures.

Conditions for safe storage, including any incompatibilities : Do not store above the following temperature: 35°C (95°F). Store in accordance with local regulations. Store in a segregated and approved area. Store in original container protected from direct sunlight in a dry, cool and well-ventilated area, away from incompatible materials (see Section 10) and food and drink. Eliminate all ignition sources. Separate from oxidizing materials. Keep container tightly closed and sealed until ready for use. Containers that have been opened must be carefully resealed and kept upright to prevent leakage. Do not store in unlabeled containers. Use appropriate containment to avoid environmental contamination.

Section 8. Exposure controls/personal protection

Control parameters

Occupational exposure limits

Ingredient name	Exposure limits
Epoxy resin (MW ≤ 700)	None.
crystalline silica, respirable powder (<10 microns)	**OSHA PEL Z3 (United States, 2/2013).** TWA: 10 mg/m³ / (%SiO2+2) 8 hours. Form: Respirable TWA: 250 mppcf / (%SiO2+5) 8 hours. Form: Respirable **ACGIH TLV (United States, 3/2015).** TWA: 0.025 mg/m³ 8 hours. Form: Respirable fraction
Mica-group minerals	**OSHA PEL Z3 (United States).** TWA: 30 mg/m³ Form: Total dust **ACGIH TLV (United States, 3/2015).** TWA: 3 mg/m³ 8 hours. Form: Respirable fraction
Pyrophyllite	**OSHA PEL Z3 (United States, 2/2013).** TWA: 20 mppcf 8 hours. **ACGIH TLV (United States).** TWA: 10 mg/m³ Form: Inhalable TWA: 3 mg/m³ Form: Respirable dust
titanium dioxide	**OSHA PEL (United States, 2/2013).** TWA: 15 mg/m³ 8 hours. Form: Total dust **ACGIH TLV (United States, 3/2015).** TWA: 10 mg/m³ 8 hours.

Section 8. Exposure controls/personal protection

4-chloro-α,α,α-trifluorotoluene	**IPEL (PPG).** TWA: 25 ppm
Solvent naphtha (petroleum), light aromatic	None.
xylene	**ACGIH TLV (United States, 3/2015).** STEL: 651 mg/m³ 15 minutes. STEL: 150 ppm 15 minutes. TWA: 434 mg/m³ 8 hours. TWA: 100 ppm 8 hours. **OSHA PEL (United States, 2/2013).** TWA: 435 mg/m³ 8 hours. TWA: 100 ppm 8 hours.
Kaolin	**ACGIH TLV (United States, 3/2015).** TWA: 2 mg/m³ 8 hours. Form: Respirable fraction **OSHA PEL (United States, 2/2013).** TWA: 5 mg/m³ 8 hours. Form: Respirable fraction TWA: 15 mg/m³ 8 hours. Form: Total dust
1,2,4-trimethylbenzene	**ACGIH TLV (United States, 3/2015).** TWA: 123 mg/m³ 8 hours. TWA: 25 ppm 8 hours.
ethylbenzene	**ACGIH TLV (United States, 3/2015).** TWA: 20 ppm 8 hours. **OSHA PEL (United States, 2/2013).** TWA: 435 mg/m³ 8 hours. TWA: 100 ppm 8 hours.

Key to abbreviations

A	=	Acceptable Maximum Peak	S	=	Potential skin absorption
ACGIH	=	American Conference of Governmental Industrial Hygienists.	SR	=	Respiratory sensitization
C	=	Ceiling Limit	SS	=	Skin sensitization
F	=	Fume	STEL	=	Short term Exposure limit values
IPEL	=	Internal Permissible Exposure Limit	TD	=	Total dust
OSHA	=	Occupational Safety and Health Administration.	TLV	=	Threshold Limit Value
R	=	Respirable	TWA	=	Time Weighted Average
Z	=	OSHA 29 CFR 1910.1200 Subpart Z - Toxic and Hazardous Substances			

Consult local authorities for acceptable exposure limits.

Recommended monitoring procedures : If this product contains ingredients with exposure limits, personal, workplace atmosphere or biological monitoring may be required to determine the effectiveness of the ventilation or other control measures and/or the necessity to use respiratory protective equipment. Reference should be made to appropriate monitoring standards. Reference to national guidance documents for methods for the determination of hazardous substances will also be required.

Appropriate engineering controls : Use only with adequate ventilation. Use process enclosures, local exhaust ventilation or other engineering controls to keep worker exposure to airborne contaminants below any recommended or statutory limits. The engineering controls also need to keep gas, vapor or dust concentrations below any lower explosive limits. Use explosion-proof ventilation equipment.

Environmental exposure controls : Emissions from ventilation or work process equipment should be checked to ensure they comply with the requirements of environmental protection legislation. In some cases, fume scrubbers, filters or engineering modifications to the process equipment will be necessary to reduce emissions to acceptable levels.

Section 8. Exposure controls/personal protection

Individual protection measures

Hygiene measures : Wash hands, forearms and face thoroughly after handling chemical products, before eating, smoking and using the lavatory and at the end of the working period. Appropriate techniques should be used to remove potentially contaminated clothing. Contaminated work clothing should not be allowed out of the workplace. Wash contaminated clothing before reusing. Ensure that eyewash stations and safety showers are close to the workstation location.

Eye/face protection : Chemical splash goggles.

Skin protection

Hand protection : Chemical-resistant, impervious gloves complying with an approved standard should be worn at all times when handling chemical products if a risk assessment indicates this is necessary. Considering the parameters specified by the glove manufacturer, check during use that the gloves are still retaining their protective properties. It should be noted that the time to breakthrough for any glove material may be different for different glove manufacturers. In the case of mixtures, consisting of several substances, the protection time of the gloves cannot be accurately estimated.

Gloves : butyl rubber

Body protection : Personal protective equipment for the body should be selected based on the task being performed and the risks involved and should be approved by a specialist before handling this product. When there is a risk of ignition from static electricity, wear anti-static protective clothing. For the greatest protection from static discharges, clothing should include anti-static overalls, boots and gloves.

Other skin protection : Appropriate footwear and any additional skin protection measures should be selected based on the task being performed and the risks involved and should be approved by a specialist before handling this product.

Respiratory protection : Respirator selection must be based on known or anticipated exposure levels, the hazards of the product and the safe working limits of the selected respirator. If workers are exposed to concentrations above the exposure limit, they must use appropriate, certified respirators. Use a properly fitted, air-purifying or air-fed respirator complying with an approved standard if a risk assessment indicates this is necessary.

Section 9. Physical and chemical properties

Appearance

Physical state : Liquid.

Color : White.

Odor : Characteristic.

Odor threshold : Not available.

pH : Not available.

Melting point : Not available.

Boiling point : >37.78°C (>100°F)

Flash point : Closed cup: 57.22°C (135°F)

Material supports combustion. : Yes.

Auto-ignition temperature : Not available.

Decomposition temperature : Not available.

Flammability (solid, gas) : Not available.

Section 9. Physical and chemical properties

Lower and upper explosive (flammable) limits : Lower: 0.96%
Upper: 7.02%

Evaporation rate : 0.28 (butyl acetate = 1)

Vapor pressure : 0.91 kPa (6.8 mm Hg) [room temperature]

Vapor density : Not available.

Relative density : 1.62

Density (lbs / gal) : 13.52

Solubility : Insoluble in the following materials: cold water.

Partition coefficient: n-octanol/water : Not available.

Viscosity : Kinematic (40°C (104°F)): >0.21 cm^2/s (>21 cSt)

Volatility : 19% (v/v), 11.646% (w/w)

% Solid. (w/w) : 88.354

Section 10. Stability and reactivity

Reactivity : No specific test data related to reactivity available for this product or its ingredients.

Chemical stability : The product is stable.

Possibility of hazardous reactions : Under normal conditions of storage and use, hazardous reactions will not occur.

Conditions to avoid : When exposed to high temperatures may produce hazardous decomposition products.
Refer to protective measures listed in sections 7 and 8.

Incompatible materials : Keep away from the following materials to prevent strong exothermic reactions: oxidizing agents, strong alkalis, strong acids.

Hazardous decomposition products : Decomposition products may include the following materials: carbon monoxide, carbon dioxide, smoke, oxides of nitrogen.

Section 11. Toxicological information

Information on toxicological effects

Acute toxicity

Product/ingredient name	Result	Species	Dose	Exposure
Epoxy resin (MW ≤ 700)	LD50 Dermal	Rabbit	>2 g/kg	-
	LD50 Oral	Rat	>2 g/kg	-
titanium dioxide	LD50 Oral	Rat	>11 g/kg	-
4-chloro-α,α,α-trifluorotoluene	LC50 Inhalation Vapor	Rat	33080 mg/m^3	4 hours
	LD50 Dermal	Rabbit	>2.7 g/kg	-
	LD50 Oral	Rat	13 g/kg	-
Solvent naphtha (petroleum), light aromatic	LD50 Dermal	Rabbit	3.48 g/kg	-

Section 11. Toxicological information

	LD50 Oral	Rat	8400 mg/kg	-
xylene	LC50 Inhalation Gas.	Rat	6670 ppm	4 hours
	LC50 Inhalation Vapor	Rat	5000 ppm	4 hours
	LD50 Dermal	Rabbit	>1.7 g/kg	-
	LD50 Oral	Rat	4.3 g/kg	-
Kaolin	LD50 Oral	Rat	>5000 mg/kg	-
1,2,4-trimethylbenzene	LC50 Inhalation Vapor	Rat	18000 mg/m³	4 hours
	LD50 Oral	Rat	5 g/kg	-
ethylbenzene	LC50 Inhalation Vapor	Rat	4000 ppm	4 hours
	LD50 Dermal	Rabbit	17.8 g/kg	-
	LD50 Oral	Rat	3.5 g/kg	-

Conclusion/Summary : There are no data available on the mixture itself.

Irritation/Corrosion

Product/ingredient name	Result	Species	Score	Exposure	Observation
xylene	Skin - Moderate irritant	Rabbit	-	24 hours 500 mg	-

Conclusion/Summary

Skin : There are no data available on the mixture itself.

Eyes : There are no data available on the mixture itself.

Respiratory : There are no data available on the mixture itself.

Sensitization

Conclusion/Summary

Skin : There are no data available on the mixture itself.

Respiratory : There are no data available on the mixture itself.

Mutagenicity

Conclusion/Summary : There are no data available on the mixture itself.

Carcinogenicity

Conclusion/Summary : There are no data available on the mixture itself.

Classification

Product/ingredient name	OSHA	IARC	NTP
crystalline silica, respirable powder (<10 microns)	-	1	Known to be a human carcinogen.
titanium dioxide	-	2B	-
xylene	-	3	-
ethylbenzene	-	2B	-

Carcinogen Classification code:

IARC: 1, 2A, 2B, 3, 4
NTP: Known to be a human carcinogen; Reasonably anticipated to be a human carcinogen
OSHA: +
Not listed/not regulated: -

Reproductive toxicity

Conclusion/Summary : There are no data available on the mixture itself.

Teratogenicity

Conclusion/Summary : There are no data available on the mixture itself.

Section 11. Toxicological information

Specific target organ toxicity (single exposure)

Name	Category
4-chloro-α,α,α-trifluorotoluene	Category 3
Solvent naphtha (petroleum), light aromatic	Category 3
xylene	Category 3
1,2,4-trimethylbenzene	Category 3

Specific target organ toxicity (repeated exposure)

Name	Category
crystalline silica, respirable powder (<10 microns)	Category 1
xylene	Category 2
ethylbenzene	Category 2

Target organs : Contains material which causes damage to the following organs: liver, spleen, brain, bone marrow, central nervous system (CNS).
Contains material which may cause damage to the following organs: blood, kidneys, lungs, the nervous system, gastrointestinal tract, upper respiratory tract, skin, eye, lens or cornea, stomach.

Aspiration hazard

Name	Result
Solvent naphtha (petroleum), light aromatic	ASPIRATION HAZARD - Category 1
xylene	ASPIRATION HAZARD - Category 1
ethylbenzene	ASPIRATION HAZARD - Category 1

Information on the likely routes of exposure

Potential acute health effects

Eye contact : Causes serious eye irritation.
Inhalation : No known significant effects or critical hazards.
Skin contact : Causes skin irritation. Defatting to the skin. May cause an allergic skin reaction.
Ingestion : No known significant effects or critical hazards.

Over-exposure signs/symptoms

Eye contact : Adverse symptoms may include the following:
pain or irritation
watering
redness

Inhalation : No specific data.

Skin contact : Adverse symptoms may include the following:
irritation
redness
dryness
cracking

Ingestion : No specific data.

Delayed and immediate effects and also chronic effects from short and long term exposure

Section 11. Toxicological information

Conclusion/Summary : There are no data available on the mixture itself. This product contains crystalline silica which can cause lung cancer or silicosis. The risk of cancer depends on the duration and level of exposure to dust from sanding surfaces or mist from spray applications. Exposure to component solvent vapor concentrations in excess of the stated occupational exposure limit may result in adverse health effects such as mucous membrane and respiratory system irritation and adverse effects on the kidneys, liver and central nervous system. Symptoms and signs include headache, dizziness, fatigue, muscular weakness, drowsiness and, in extreme cases, loss of consciousness. Solvents may cause some of the above effects by absorption through the skin. There is some evidence that repeated exposure to organic solvent vapors in combination with constant loud noise can cause greater hearing loss than expected from exposure to noise alone. If splashed in the eyes, the liquid may cause irritation and reversible damage. Ingestion may cause nausea, diarrhea and vomiting. This takes into account, where known, delayed and immediate effects and also chronic effects of components from short-term and long-term exposure by oral, inhalation and dermal routes of exposure and eye contact.

Short term exposure

Potential immediate effects : There are no data available on the mixture itself.

Potential delayed effects : There are no data available on the mixture itself.

Long term exposure

Potential immediate effects : There are no data available on the mixture itself.

Potential delayed effects : There are no data available on the mixture itself.

Potential chronic health effects

General : Causes damage to organs through prolonged or repeated exposure. Prolonged or repeated contact can defat the skin and lead to irritation, cracking and/or dermatitis. Once sensitized, a severe allergic reaction may occur when subsequently exposed to very low levels.

Carcinogenicity : May cause cancer. Risk of cancer depends on duration and level of exposure.

Mutagenicity : No known significant effects or critical hazards.

Teratogenicity : No known significant effects or critical hazards.

Developmental effects : No known significant effects or critical hazards.

Fertility effects : No known significant effects or critical hazards.

Numerical measures of toxicity

Acute toxicity estimates

Route	ATE value
Oral	83393.1 mg/kg
Dermal	23251.6 mg/kg
Inhalation (gases)	186088 ppm
Inhalation (vapors)	234 mg/l

Section 12. Ecological information

Toxicity

Product/ingredient name	Result	Species	Exposure
titanium dioxide ethylbenzene	Acute LC50 >100 mg/l Fresh water Acute LC50 150 to 200 mg/l Fresh water	Daphnia - Daphnia magna Fish - Lepomis macrochirus - Young of the year	48 hours 96 hours

Persistence and degradability

Product/ingredient name	Aquatic half-life	Photolysis	Biodegradability
xylene ethylbenzene	- -	- -	Readily Readily

Bioaccumulative potential

Product/ingredient name	$LogP_{ow}$	BCF	Potential
xylene 1,2,4-trimethylbenzene ethylbenzene	3.16 3.63 3.15	7.4 to 18.5 120.23 79.43	low low low

Mobility in soil

Soil/water partition coefficient (K_{OC}) : Not available.

Section 13. Disposal considerations

Disposal methods : The generation of waste should be avoided or minimized wherever possible. Disposal of this product, solutions and any by-products should at all times comply with the requirements of environmental protection and waste disposal legislation and any regional local authority requirements. Dispose of surplus and non-recyclable products via a licensed waste disposal contractor. Waste should not be disposed of untreated to the sewer unless fully compliant with the requirements of all authorities with jurisdiction. Waste packaging should be recycled. Incineration or landfill should only be considered when recycling is not feasible. This material and its container must be disposed of in a safe way. Care should be taken when handling emptied containers that have not been cleaned or rinsed out. Empty containers or liners may retain some product residues. Vapor from product residues may create a highly flammable or explosive atmosphere inside the container. Do not cut, weld or grind used containers unless they have been cleaned thoroughly internally. Avoid dispersal of spilled material and runoff and contact with soil, waterways, drains and sewers.

Disposal should be in accordance with applicable regional, national and local laws and regulations.

Refer to Section 7: HANDLING AND STORAGE and Section 8: EXPOSURE CONTROLS/PERSONAL PROTECTION for additional handling information and protection of employees. Section 6. Accidental release measures

14. Transport information

	DOT	IMDG	IATA
UN number	UN1263	UN1263	UN1263
UN proper shipping name	PAINT	PAINT	PAINT
Transport hazard class (es)	3	3	3
Packing group	III	III	III
Environmental hazards	No.	Yes.	No.
Marine pollutant substances	Not applicable.	(Epoxy resin (MW ≤ 700), Solvent naphtha (petroleum), light aromatic)	Not applicable.
Product RQ (lbs)	4710.7	Not applicable.	Not applicable.
RQ substances	(xylene)	Not applicable.	Not applicable.

Additional information

DOT : This product may be re-classified as "Combustible Liquid," unless transported by vessel or aircraft. Non-bulk packages (less than or equal to 119 gal) of combustible liquids are not regulated as hazardous materials in package sizes less than the product reportable quantity.

IMDG : The marine pollutant mark is not required when transported in sizes of ≤5 L or ≤5 kg.

IATA : The environmentally hazardous substance mark may appear if required by other transportation regulations.

Special precautions for user : **Transport within user's premises:** always transport in closed containers that are upright and secure. Ensure that persons transporting the product know what to do in the event of an accident or spillage.

Section 15. Regulatory information

United States

United States inventory (TSCA 8b) : All components are listed or exempted.

SARA 302/304

SARA 304 RQ : Not applicable.

Composition/information on ingredients

No products were found.

SARA 311/312

Classification : Fire hazard
Immediate (acute) health hazard
Delayed (chronic) health hazard

Composition/information on ingredients

Section 15. Regulatory information

Name	Fire hazard	Sudden release of pressure	Reactive	Immediate (acute) health hazard	Delayed (chronic) health hazard
Epoxy resin (MW ≤ 700)	No.	No.	No.	Yes.	No.
crystalline silica, respirable powder (<10 microns)	No.	No.	No.	No.	Yes.
Pyrophyllite	Yes.	No.	No.	No.	No.
titanium dioxide	No.	No.	No.	No.	Yes.
4-chloro-α,α,α-trifluorotoluene	Yes.	No.	No.	Yes.	No.
Solvent naphtha (petroleum), light aromatic	Yes.	No.	No.	Yes.	No.
xylene	Yes.	No.	No.	Yes.	Yes.
1,2,4-trimethylbenzene	Yes.	No.	No.	Yes.	No.
ethylbenzene	Yes.	No.	No.	Yes.	Yes.

SARA 313

Supplier notification :

Chemical name	CAS number	Concentration
xylene	1330-20-7	1 - 5
1,2,4-trimethylbenzene	95-63-6	0.5 - 1.5
ethylbenzene	100-41-4	0.1 - 1

SARA 313 notifications must not be detached from the SDS and any copying and redistribution of the SDS shall include copying and redistribution of the notice attached to copies of the SDS subsequently redistributed.

Additional environmental information is contained on the Environmental Data Sheet for this product, which can be obtained from your PPG representative.

California Prop. 65

WARNING: This product contains a chemical known to the State of California to cause cancer.

Section 16. Other information

Hazardous Material Information System (U.S.A.)

Health : 2 * **Flammability** : 2 **Physical hazards** : 0

(*) - Chronic effects

Caution: HMIS® ratings are based on a 0-4 rating scale, with 0 representing minimal hazards or risks, and 4 representing significant hazards or risks Although HMIS® ratings are not required on MSDSs under 29 CFR 1910.1200, the preparer may choose to provide them. HMIS® ratings are to be used with a fully implemented HMIS® program. HMIS® is a registered mark of the National Paint & Coatings Association (NPCA). HMIS® materials may be purchased exclusively from J. J. Keller (800) 327-6868.

The customer is responsible for determining the PPE code for this material.

National Fire Protection Association (U.S.A.)

Health : 2 **Flammability** : 2 **Instability** : 0

Date of previous issue : **4/30/2016**

Organization that prepared the MSDS : EHS

Section 16. Other information

Key to abbreviations : ATE = Acute Toxicity Estimate
BCF = Bioconcentration Factor
GHS = Globally Harmonized System of Classification and Labelling of Chemicals
IATA = International Air Transport Association
IBC = Intermediate Bulk Container
IMDG = International Maritime Dangerous Goods
LogPow = logarithm of the octanol/water partition coefficient
MARPOL = International Convention for the Prevention of Pollution From Ships, 1973 as modified by the Protocol of 1978. ("Marpol" = marine pollution)
UN = United Nations

Indicates information that has changed from previously issued version.

Disclaimer

The information contained in this data sheet is based on present scientific and technical knowledge. The purpose of this information is to draw attention to the health and safety aspects concerning the products supplied by PPG, and to recommend precautionary measures for the storage and handling of the products. No warranty or guarantee is given in respect of the properties of the products. No liability can be accepted for any failure to observe the precautionary measures described in this data sheet or for any misuse of the products.

HPC/Industrial Maintenance

AQUAPON 35 Polyamide Epoxy Gloss

GENERAL DESCRIPTION

Recommended for heavy duty service in corrosive industrial atmospheres where a tough, impact, abrasion and mar-resistant coating is needed. Apply over properly prepared and primed steel, galvanized steel or aluminum. Also recommended for use on masonry surfaces, including plaster walls, cement composite board and concrete block. **For Professional Use Only; Not Intended for Household Use.**

TINTING AND BASE INFORMATION

95-1	Porcelain White
95-10	Safety Red
95-12	Safety Orange
95-13	Safety Yellow
95-3	Light Gray
95-98	Ready Mix Component B

RECOMMENDED USES

Aluminum	Wood
Concrete Floors	Concrete, Stucco, Plaster, Masonry
Drywall	CMU
Ferrous Metal	Galvanized Steel

FEATURES AND BENEFITS

Fully 3.5 VOC compliant
Virtually infinite color capability with PerformaColor® system
Abrasion and mar resistant
Excellent chemical resistance
Spray, brush or roller application
Performance Offset to Federal & Military Standards: TT-C-535, TT-C-550, Mil-C-22750, Mil-P-23377, Mil-P-24441, Mil-C-82407
Meets MPI Category #82, Epoxy Non-slip Coating
Meets MPI Category #98, High Build Epoxy Coating

MIXING AND APPLICATIONS INFORMATION

Mix both components thoroughly before blending. Add the correct Component "B" to Component "A" and blend well using a mechanical mixer.

Permissible temperatures during application:

Material:	50º to 90º F	10ºC to 32ºC
Ambient:	50º to 100º F	10ºC to 38ºC
Substrate:	50º to 130º F	10ºC to 54ºC

Application Equipment: Changes in application equipment, pressures and/or tip sizes may be required depending on ambient temperatures and application conditions.

Brush: High Quality Polyester/Nylon Brush
Roller: 3/8" nap; solvent resistant core

Airless Spray: Pressure 1500 psi, tip 0.015" to .0.017"

Conventional Spray: Fluid Nozzle: DeVilbiss MBC gun, with 777 air cap with E or FF tip and needle, or comparable equipment.
Atomization Pressure: 55-70
Fluid Pressure: Can not specify, dependent on numerous factors.

Thinning: Thinning will not be required for most applications. If thinning is necessary and permitted by local regulations, the 97-725 Thinner is recommended. The 97-735 Thinner may also be used. Its use provides less HAPS solvents and extends potlife and curing times.

PRODUCT DATA

PRODUCT TYPE:	Polyamide Epoxy
GLOSS:	Gloss +70 (20º Gloss Meter)
VOC*:	3.31lbs./gal. (397 g/L)
COVERAGE:	286 to 430 sq. ft./gal. (27 to 40 sq. m/3.78L)

Note: Does not include loss due to varying application method, surface porosity, or mixing.

DFT:	2.0 to 3.0 mils
WEIGHT/GALLON*:	10.7 lbs.(4.9 kg)+/-0.3 lbs. (136g)
VOLUME SOLIDS*:	53.6% +/- 2%
WEIGHT SOLIDS*:	69.1% +/- 2%
MIXED RATIO:	1 to 1 by Volume

*Product data calculated on mixed product.

Wet Film Thickness:	3.7 to 5.6 mils
Wet Microns:	94 to 142.2
Dry Film Thickness:	2.0 to 3.0 mils
Dry Microns:	50.8 to 76.2
POT LIFE:	4 hours
INDUCTION TIME:	30 minutes
IN SERVICE TEMP.:	Dry Heat 250ºF (121ºC)

DRYING TIME: Dry time @77ºF (25ºC); 50% relative humidity.

To Touch:	2 hours
To Handle:	12 hours
To Recoat:	12 hours

Drying times listed may vary depending on temperature, humidity, film build, color, and air movement.

CLEANUP:	97-725, 97-734, 97-735, 97-736 PPG Thinners
FLASH POINT:	95-1 41ºF (5ºC)
	95-98 66ºF (19ºC)

PACKAGING

1-Gallon (3.78L)
5-Gallon (18.9L)

GENERAL SURFACE PREPARATION

The surface to be coated must be dimensionally stable, dry, clean, and free of oil, grease, release agents, curing compounds, and other foreign materials. Prime bare areas should with suitable primer. WARNING! If you scrape, sand, or remove old paint, you may release lead dust or fumes. LEAD IS TOXIC. EXPOSURE TO LEAD DUST OR FUMES CAN CAUSE SERIOUS ILLNESS, SUCH AS BRAIN DAMAGE, ESPECIALLY IN CHILDREN. PREGNANT WOMEN SHOULD ALSO AVOID EXPOSURE. Wear a properly fitted NIOSH-approved respirator and prevent skin contact to control lead exposure. Clean up carefully with a HEPA vacuum and a wet mop. Before you start, find out how to protect yourself and your family by contacting the USEPA National Lead Information Hotline at 1-800-424-LEAD or log on to www.epa.gov/lead. In Canada contact a regional Health Canada office. Follow these instructions to control exposure to other hazardous substances that may be released during surface preparation.

ALUMINUM: Solvent Clean per SSPC-SP1 to remove grease and oils.

CMU: Cure for thirty (30) days under normal drying conditions.

CONCRETE FLOORS: Cure for thirty (30) days under normal drying conditions. Acid etch or abrasive blast. See SSPC-SP13.

CONCRETE, STUCCO, PLASTER, MASONRY: Cure for thirty (30) days under normal drying conditions. Concrete which has been treated with curing compounds or hardeners, should be thoroughly abraded.

FERROUS METAL: Commercial Blast Clean per SSPC-SP6. The minimum surface preparation is Hand Tool or Power Tool Clean per SSPC-SP2 or SP3.

GALVANIZED STEEL: Solvent Clean per SSPC-SP1. If any oxidation (white rust) has formed, sand and remove all forms of contamination. If the galvanized has been passivated or stabilized, the surface must be abraded, i.e., Brush-Off Blast Clean per SSPC-SP7 or chemically treat the surface.

WOOD,PLYWOOD: Sand lightly in order to remove surface roughness and loose wood fibers. Then remove all dirt, dust, grime and any other forms of contamination. Remove grease and oils by Solvent Cleaning per SSPC-SP1.

HD COATING SYSTEMS: 70-HD, 296-HD, 313-HD, 322-HD, 350-HD, 391-HD, 394-HD, 396-HD, 422-HD. Refer to PPG High Performance Coatings System in Detail brochure (H13905).

RECOMMENDED PRIMERS

Concrete Masonry Units	16-90, 95-217, 98-685
Galvanized Steel	95-245, 97-145, 97-946
Aluminum	95-245, 97-145, 97-946
Ferrous Metal	97-680, 95-245, 97-145, 97-670, 97-846
Drywall	Self-priming*, or use 6-2
Concrete Floors	Self-priming*
Wood and Hardboard	Self-priming*
Concrete, Stucco, Plaster, Masonry, other than CM Unit	Self-priming*, or use 6-2

*For optimum sheen uniformity over porous substates, it is recommended that a primer or sealer be used.

LIMITATIONS OF USE

For Professional Use Only; Not Intended for Household Use. Apply only when air temperature is 60°F (15.6°C) or higher and when surface temperature is at least 5°F (3°C) above the dew point. The solvents contained in *AQUAPON* 35 Gloss Finishes can lift some alkyd, oil based and other coatings that are not resistant to strong solvents. A test patch application is recommended. Application on wood is limited to incidental or interior application.

SAFETY

Proper safety procedures should be followed at all times while handling this product. USE WITH ADEQUATE VENTILATION. KEEP OUT OF REACH OF CHILDREN. Spray equipment must be handled with due care and in accordance with manufacturer's recommendation. High-pressure injection of coatings into the skin by airless equipment may cause serious injury. Read all label and Material Safety Data Sheet for important health/safety information prior to use. MSDS are available through our website www.ppghpc.com or by calling 1-800-441-9695.

The PPG logo is a registered trademark of PPG Industries Ohio, Inc. *AQUAPON* and *PerformaColor* are registered trademarks of PPG Architectural Finishes, Inc.

PPG Architectural Finishes, Inc. believes the technical data presented is currently accurate: however, no guarantee of accuracy, comprehensiveness, or performance is given or implied. Improvements in coatings technology may cause future technical data to vary from what is in this bulletin. For complete, up-to-date technical information, visit our web site or call 1-800-441-9695.

PPG Industries, Inc.
Architectural Coatings
One PPG Place
Pittsburgh, PA 15272
www.ppghpc.com

Technical Services
1-800-441-9695
1-888-807-5123 fax

Architect/Specifier
1-888-PPG-IDEA

PPG Canada, Inc.
Architectural Coatings
4 Kenview Blvd
Brampton, ON L6T 5E4

F5 1/2013
Supersedes (9/2012)

Material Safety Data Sheet

PPG High Performance Coatings

Date of issue 6 January 2013
Version 8

1 . Product and company identification

Product name : Aquapon 35 Procelain White Comp. A
Code : 95-1C
Supplier : PPG Industries, Inc.
One PPG Place
Pittsburgh, PA 15272
Emergency telephone number : (412) 434-4515 (U.S.)
(514) 645-1320 (Canada)
01-800-00-21-400 (Mexico)
Technical Phone Number : 1-800-441-9695 (8:00 am to 5:00 pm EST)

2 . Hazards identification

Emergency overview : WARNING!

FLAMMABLE LIQUID AND VAPOR. CAUSES RESPIRATORY TRACT, EYE AND SKIN IRRITATION. MAY CAUSE ALLERGIC SKIN REACTION. MAY BE HARMFUL IF INHALED, ABSORBED THROUGH SKIN OR SWALLOWED. PROLONGED OR REPEATED CONTACT MAY DRY SKIN AND CAUSE IRRITATION. CONTAINS MATERIAL THAT CAN CAUSE TARGET ORGAN DAMAGE.

Keep away from flames, such as a pilot light, and any object that sparks, such as an electric motor. Keep away from heat. Do not smoke. Do not get in eyes or on skin or clothing. Avoid breathing vapor or mist. Use only with adequate ventilation. Keep container tightly closed and sealed until ready for use. Wash thoroughly after handling.

Potential acute health effects

Inhalation : May be harmful if inhaled. Irritating to respiratory system. Can irritate eyes, nose, mouth and throat.
Ingestion : May be harmful if swallowed.
Skin : Harmful in contact with skin. Severely irritating to the skin. May cause an allergic skin reaction.
Eyes : Severely irritating to eyes. Risk of serious damage to eyes.

Over-exposure signs/symptoms

Repeated exposure to high vapor concentrations may cause irritation of the respiratory system and permanent brain and nervous system damage. Inhalation of vapor/aerosol concentrations above the recommended exposure limits causes headaches, drowsiness and nausea and may lead to unconsciousness or death. There is some evidence that repeated exposure to organic solvent vapors in combination with constant loud noise can cause greater hearing loss than expected from exposure to noise alone.

Medical conditions aggravated by over-exposure : Pre-existing skin disorders and disorders involving any other target organs mentioned in this MSDS as being at risk may be aggravated by over-exposure to this product.

This Material Safety Data Sheet has been prepared in accordance with Canada's Workplace Hazardous Materials Information System (WHMIS) and the OSHA Hazard Communication Standard (29 CFR 1910.1200).

See toxicological information (Section 11)

Powered by ATRION

3 . Composition/information on ingredients

Name	CAS number	%
titanium dioxide	13463-67-7	30 - 60
NJTS 80100337-5132	Proprietary	10 - 30
propan-2-ol	67-63-0	5 - 10
Solvent naphtha (petroleum), light arom.	64742-95-6	3 - 7
xylene	1330-20-7	3 - 7
1,2,4-trimethylbenzene	95-63-6	1 - 5
aluminium hydroxide	21645-51-2	1 - 5
2-(propyloxy)ethanol	2807-30-9	1 - 5
4-hydroxy-4-methylpentan-2-one	123-42-2	1 - 5
ethylbenzene	100-41-4	0.1 - 1
cumene	98-82-8	0.1 - 1

There are no additional ingredients present which, within the current knowledge of the supplier and in the concentrations applicable, are classified as hazardous to health or the environment and hence require reporting in this section.

4 . First aid measures

If ingestion, irritation, any type of overexposure or symptoms of overexposure occur during or persists after use of this product, contact a POISON CONTROL CENTER, EMERGENCY ROOM OR PHYSICIAN immediately; have Material Safety Data Sheet information available. Never give anything by mouth to an unconscious or convulsing person.

Eye contact : Check for and remove any contact lenses. Immediately flush eyes with running water for at least 15 minutes, keeping eyelids open. Seek immediate medical attention.

Skin contact : Remove contaminated clothing and shoes. Wash skin thoroughly with soap and water or use recognized skin cleanser. Do NOT use solvents or thinners.

Inhalation : Remove to fresh air. Keep person warm and at rest. If not breathing, if breathing is irregular or if respiratory arrest occurs, provide artificial respiration or oxygen by trained personnel.

Ingestion : If swallowed, seek medical advice immediately and show this container or label. Keep person warm and at rest. Do NOT induce vomiting.

Notes to physician : No specific treatment. Treat symptomatically. Contact poison treatment specialist immediately if large quantities have been ingested or inhaled.

5 . Fire-fighting measures

Flammability of the product : Flammable liquid. In a fire or if heated, a pressure increase will occur and the container may burst, with the risk of a subsequent explosion. Vapors may accumulate in low or confined areas or travel a considerable distance to a source of ignition and flash back. Runoff to sewer may create fire or explosion hazard.

Extinguishing media

Suitable : Use dry chemical, CO_2, water spray (fog) or foam.

Not suitable : Do not use water jet.

Special exposure hazards : Promptly isolate the scene by removing all persons from the vicinity of the incident if there is a fire. No action shall be taken involving any personal risk or without suitable training. Move containers from fire area if this can be done without risk. Use water spray to keep fire-exposed containers cool.

Hazardous combustion products : Decomposition products may include the following materials:
carbon oxides
metal oxide/oxides

Special protective equipment for fire-fighters : Fire-fighters should wear appropriate protective equipment and self-contained breathing apparatus (SCBA) with a full face-piece operated in positive pressure mode.

Powered by ATRION

6 . Accidental release measures

Personal precautions : No action shall be taken involving any personal risk or without suitable training. Evacuate surrounding areas. Keep unnecessary and unprotected personnel from entering. Do not touch or walk through spilled material. Shut off all ignition sources. No flares, smoking or flames in hazard area. Avoid breathing vapor or mist. Provide adequate ventilation. Wear appropriate respirator when ventilation is inadequate. Put on appropriate personal protective equipment (see Section 8).

Environmental precautions : Avoid dispersal of spilled material and runoff and contact with soil, waterways, drains and sewers. Inform the relevant authorities if the product has caused environmental pollution (sewers, waterways, soil or air).

Large spill : Stop leak if without risk. Move containers from spill area. Approach release from upwind. Use spark-proof tools and explosion-proof equipment. Prevent entry into sewers, water courses, basements or confined areas. Wash spillages into an effluent treatment plant or proceed as follows. Contain and collect spillage with non-combustible, absorbent material e.g. sand, earth, vermiculite or diatomaceous earth and place in container for disposal according to local regulations (see Section 13). Dispose of via a licensed waste disposal contractor. Contaminated absorbent material may pose the same hazard as the spilled product. Note: see Section 1 for emergency contact information and Section 13 for waste disposal.

Small spill : Stop leak if without risk. Move containers from spill area. Use spark-proof tools and explosion-proof equipment. Dilute with water and mop up if water-soluble or absorb with an inert dry material and place in an appropriate waste disposal container. Dispose of via a licensed waste disposal contractor.

7 . Handling and storage

Handling : Put on appropriate personal protective equipment (see Section 8). Eating, drinking and smoking should be prohibited in areas where this material is handled, stored and processed. Persons with a history of skin sensitization problems should not be employed in any process in which this product is used. Do not swallow. Do not get in eyes or on skin or clothing. Avoid breathing vapor or mist. Use only with adequate ventilation. Wear appropriate respirator when ventilation is inadequate. Do not enter storage areas and confined spaces unless adequately ventilated. Keep in the original container or an approved alternative made from a compatible material, kept tightly closed when not in use. Store and use away from heat, sparks, open flame or any other ignition source. Use explosion-proof electrical (ventilating, lighting and material handling) equipment. Use non-sparking tools. Take precautionary measures against electrostatic discharges. Vapors are heavier than air and may spread along floors. To avoid fire or explosion, dissipate static electricity during transfer by grounding and bonding containers and equipment before transferring material. Empty containers retain product residue and can be hazardous. Do not reuse container. If this material is part of a multiple component system, read the Material Safety Data Sheet(s) for the other component or components before blending as the resulting mixture may have the hazards of all of its parts.

Storage : Store in accordance with local regulations. Store in a segregated and approved area. Store in original container protected from direct sunlight in a dry, cool and well-ventilated area, away from incompatible materials (see Section 10) and food and drink. Eliminate all ignition sources. Separate from oxidizing materials. Keep container tightly closed and sealed until ready for use. Containers that have been opened must be carefully resealed and kept upright to prevent leakage. Do not store in unlabeled containers. Use appropriate containment to avoid environmental contamination. Do not store above the following temperature: 120F / 49C.

8 . Exposure controls/personal protection

Name	Result	ACGIH	OSHA	Ontario	Mexico	PPG

Powered by ATRION

8 . Exposure controls/personal protection

titanium dioxide	TWA	10 mg/m³	15 mg/m³ TD	10 mg/m³ TD	10 mg/m³ (as Ti)	Not established
	STEL	Not established	Not established	Not established	20 mg/m³ (as Ti)	Not established
propan-2-ol	TWA	200 ppm	400 ppm	200 ppm	400 ppm	Not established
	STEL	400 ppm	Not established	400 ppm	500 ppm	Not established
xylene	TWA	100 ppm	100 ppm	100 ppm	100 ppm	Not established
	STEL	150 ppm	Not established	150 ppm	150 ppm	Not established
1,2,4-trimethylbenzene	TWA	25 ppm	Not established	25 ppm	25 ppm	Not established
	STEL	Not established	Not established	Not established	35 ppm	Not established
aluminium hydroxide	TWA	1 mg/m³	Not established	Not established	2 mg/m³	Not established
2-(propyloxy)ethanol	TWA	Not established	Not established	25 ppm S	Not established	20 ppm S
	STEL	Not established	Not established	Not established	Not established	40 ppm
4-hydroxy-4-methylpentan-2-one	TWA	50 ppm	50 ppm	50 ppm	50 ppm	Not established
	STEL	Not established	Not established	75 ppm	75 ppm	Not established
ethylbenzene	TWA	20 ppm	100 ppm	100 ppm	100 ppm	Not established
	STEL	Not established	Not established	125 ppm	125 ppm	Not established
cumene	TWA	50 ppm	50 ppm S	50 ppm S	50 ppm S	Not established
	STEL	Not established	Not established	Not established	75 ppm S	Not established

Key to abbreviations

A	=	Acceptable Maximum Peak	S	=	Potential skin absorption
ACGIH	=	American Conference of Governmental Industrial Hygienists.	SR	=	Respiratory sensitization
C	=	Ceiling Limit	SS	=	Skin sensitization
F	=	Fume	STEL	=	Short term Exposure limit values
IPEL	=	Internal Permissible Exposure Limit	TD	=	Total dust
OSHA	=	Occupational Safety and Health Administration.	TLV	=	Threshold Limit Value
R	=	Respirable	TWA	=	Time Weighted Average
Z	=	OSHA 29CFR 1910.1200 Subpart Z - Toxic and Hazardous Substances			

Consult local authorities for acceptable exposure limits.

Recommended monitoring procedures : If this product contains ingredients with exposure limits, personal, workplace atmosphere or biological monitoring may be required to determine the effectiveness of the ventilation or other control measures and/or the necessity to use respiratory protective equipment. Reference should be made to appropriate monitoring standards. Reference to national guidance documents for methods for the determination of hazardous substances will also be required.

Powered by ATRION

8 . Exposure controls/personal protection

Engineering measures : Use only with adequate ventilation. Use process enclosures, local exhaust ventilation or other engineering controls to keep worker exposure to airborne contaminants below any recommended or statutory limits. The engineering controls also need to keep gas, vapor or dust concentrations below any lower explosive limits. Use explosion-proof ventilation equipment.

Hygiene measures : Wash hands, forearms and face thoroughly after handling chemical products, before eating, smoking and using the lavatory and at the end of the working period. Appropriate techniques should be used to remove potentially contaminated clothing. Contaminated work clothing should not be allowed out of the workplace. Wash contaminated clothing before reusing. Ensure that eyewash stations and safety showers are close to the workstation location.

Personal protection

Eyes : Chemical splash goggles.

Hands : Chemical-resistant, impervious gloves complying with an approved standard should be worn at all times when handling chemical products if a risk assessment indicates this is necessary. Considering the parameters specified by the glove manufacturer, check during use that the gloves are still retaining their protective properties. It should be noted that the time to breakthrough for any glove material may be different for different glove manufacturers. In the case of mixtures, consisting of several substances, the protection time of the gloves cannot be accurately estimated.

Gloves : nitrile, neoprene

Respiratory : If workers are exposed to concentrations above the exposure limit, they must use appropriate, certified respirators. Use a properly fitted, air-purifying or air-fed respirator complying with an approved standard if a risk assessment indicates this is necessary. Respirator selection must be based on known or anticipated exposure levels, the hazards of the product and the safe working limits of the selected respirator.

Skin : Personal protective equipment for the body should be selected based on the task being performed and the risks involved and should be approved by a specialist before handling this product.
When there is a risk of ignition from static electricity, wear anti-static protective clothing. For the greatest protection from static discharges, clothing should include anti-static overalls, boots and gloves.

Environmental exposure controls : Emissions from ventilation or work process equipment should be checked to ensure they comply with the requirements of environmental protection legislation. In some cases, fume scrubbers, filters or engineering modifications to the process equipment will be necessary to reduce emissions to acceptable levels.

9 . Physical and chemical properties

Physical state : Liquid.

Flash point : Closed cup: 5°C (41°F)

Explosion limits : Lower: 1.5%

Material supports combustion. : Yes.

Color : Not available.

Odor : Not available.

pH : Not available.

Boiling/condensation point : >37.78°C (>100°F)

Melting/freezing point : Not available.

Specific gravity : 1.39

Density (lbs / gal) : 11.6

Vapor pressure : 2.5 kPa (18.5 mm Hg) [room temperature]

Vapor density : Not available.

Volatility : 47% (v/v), 28.44% (w/w)

Evaporation rate : 1.2 (butyl acetate = 1)

Partition coefficient: n-octanol/water : Not available.

Powered by ATRION

9 . Physical and chemical properties

% Solid. (w/w) : 71.56

10 . Stability and reactivity

Stability : Stable under recommended storage and handling conditions (see Section 7).

Conditions to avoid : Avoid all possible sources of ignition (spark or flame). Do not pressurize, cut, weld, braze, solder, drill, grind or expose containers to heat or sources of ignition.

Materials to avoid : Reactive or incompatible with the following materials:,acids,oxidizing materials,strong alkalis

Hazardous decomposition products : Under normal conditions of storage and use, hazardous decomposition products should not be produced.

Hazardous polymerization : Under normal conditions of storage and use, hazardous polymerization will not occur.

11 . Toxicological information

Acute toxicity

Product/ingredient name	Result	Species	Dose	Exposure
titanium dioxide	LD50 Oral	Rat	>10 g/kg	-
propan-2-ol	LD50 Oral	Rat	4.396 g/kg	-
	LD50 Dermal	Rabbit	12800 mg/kg	-
	LC50 Inhalation Vapor	Rat	72600 mg/m3	4 hours
Solvent naphtha (petroleum), light arom.	LD50 Oral	Rat	8400 mg/kg	-
	LD50 Dermal	Rabbit	3.48 g/kg	-
xylene	LD50 Oral	Rat	4.3 g/kg	-
	LD50 Dermal	Rabbit	>1.7 g/kg	-
	LC50 Inhalation Vapor	Rat	5000 ppm	4 hours
1,2,4-trimethylbenzene	LD50 Oral	Rat	5 g/kg	-
	LC50 Inhalation	Rat	18000 mg/m3	4 hours
2-(propyloxy)ethanol	LD50 Oral	Rat	3089 mg/kg	-
	LD50 Dermal	Rabbit	1.337 g/kg	-
4-hydroxy-4-methylpentan-2-one	LD50 Oral	Rat	2520 mg/kg	-
	LD50 Dermal	Rabbit	13500 mg/kg	-
ethylbenzene	LD50 Oral	Rat	3.5 g/kg	-
	LD50 Dermal	Rabbit	>5000 mg/kg	-
	LC50 Inhalation Vapor	Rat	4000 ppm	4 hours
cumene	LD50 Oral	Rat	1.4 g/kg	-
	LD50 Dermal	Rabbit	12.3 g/kg	-
	LC50 Inhalation	Rat	39000 mg/m3	4 hours

Conclusion/Summary : Not available.

Chronic toxicity

Conclusion/Summary : Not available.

Defatting irritant : Prolonged or repeated contact can defat the skin and lead to irritation, cracking and/or dermatitis.

Target organs : Contains material which causes damage to the following organs: lungs, brain, central nervous system (CNS).
Contains material which may cause damage to the following organs: blood, kidneys, the nervous system, liver, mucous membranes, spleen, gastrointestinal tract, cardiovascular system, upper respiratory tract, skin, eye, lens or cornea, testes.

Carcinogenicity

Carcinogenicity : Contains material which may cause cancer, based on animal data. Risk of cancer depends on duration and level of exposure.

Classification

Powered by ATRION

11 . Toxicological information

Product/ingredient name	ACGIH	IARC	NTP	OSHA
titanium dioxide	A4	2B	-	-
propan-2-ol	A4	3	-	-
xylene	A4	3	-	-
aluminium hydroxide	A4	-	-	-
ethylbenzene	A3	2B	-	-
cumene	-	2B	-	-

Carcinogen Classification code:
ACGIH: A1, A2, A3, A4, A5
IARC: 1, 2A, 2B, 3, 4
NTP: Proven, Possible
OSHA: +
Not listed or regulated as a carcinogen: -

12 . Ecological information

Environmental effects : No known significant effects or critical hazards.

Aquatic ecotoxicity

Product/ingredient name	Result	Species	Exposure
propan-2-ol	Acute LC50 >1400000 ug/L	Fish - Bluegill - Lepomis macrochirus	96 hours
xylene	Acute LC50 3300 to 4093 ug/L Fresh water	Fish - Rainbow trout,donaldson trout - Oncorhynchus mykiss	96 hours
1,2,4-trimethylbenzene	Acute LC50 7720 to 8280 ug/L Fresh water	Fish - Fathead minnow - Pimephales promelas	96 hours
4-hydroxy-4-methylpentan-2-one	Acute LC50 420000 ug/L Fresh water	Fish - Bluegill - Lepomis macrochirus	96 hours
ethylbenzene	Acute LC50 4200 ug/L Fresh water	Fish - Rainbow trout,donaldson trout - Oncorhynchus mykiss	96 hours
	Acute LC50 5100 to 5700 ug/L Marine water	Fish - Atlantic silverside - Menidia menidia	96 hours
	Acute EC50 2930 to 4400 ug/L Fresh water	Daphnia - Water flea - Daphnia magna	48 hours
	Chronic NOEC 3300 ug/L Marine water	Fish - Atlantic silverside - Menidia menidia	96 hours
	Chronic NOEC 6800 ug/L Fresh water	Daphnia - Water flea - Daphnia magna	48 hours
cumene	Acute LC50 2700 ug/L Fresh water	Fish - Rainbow trout,donaldson trout - Oncorhynchus mykiss	96 hours
	Acute EC50 10600 to 14100 ug/L Fresh water	Daphnia - Water flea - Daphnia magna	48 hours

13 . Disposal considerations

Waste disposal : The generation of waste should be avoided or minimized wherever possible. Disposal of this product, solutions and any by-products should at all times comply with the requirements of environmental protection and waste disposal legislation and any regional local authority requirements. Dispose of surplus and non-recyclable products via a licensed waste disposal contractor. Waste should not be disposed of untreated to the sewer unless fully compliant with the requirements of all authorities with jurisdiction. Waste packaging should be recycled. Incineration or landfill should only

Powered by ATRION

13 . Disposal considerations

be considered when recycling is not feasible. This material and its container must be disposed of in a safe way. Care should be taken when handling emptied containers that have not been cleaned or rinsed out. Empty containers or liners may retain some product residues. Vapor from product residues may create a highly flammable or explosive atmosphere inside the container. Do not cut, weld or grind used containers unless they have been cleaned thoroughly internally. Avoid dispersal of spilled material and runoff and contact with soil, waterways, drains and sewers.

Disposal should be in accordance with applicable regional, national and local laws and regulations.

Refer to Section 7: HANDLING AND STORAGE and Section 8: EXPOSURE CONTROLS/PERSONAL PROTECTION for additional handling information and protection of employees. Section 6. Accidental release measures

14 . Transport information

Regulation	UN number	Proper shipping name	Classes	PG*	Additional information
UN	1263	PAINT	3	II	-
IMDG	1263	PAINT	3	II	-
DOT	1263	PAINT	3	II	**Reportable quantity** 1841.1 lbs / 835.85 kg [158. 36 gal / 599.48 L] Package sizes shipped in quantities less than the product reportable quantity are not subject to the RQ (reportable quantity) transportation requirements.

PG* : Packing group

Reportable quantity RQ : CERCLA: Hazardous substances.: ethylbenzene: 1000 lbs. (454 kg); m-xylene: 1000 lbs. (454 kg); xylene: 100 lbs. (45.4 kg); 2-(propyloxy)ethanol; cumene: 5000 lbs. (2270 kg); butan-1-ol: 5000 lbs. (2270 kg);

15 . Regulatory information

United States inventory (TSCA 8b) : All components are listed or exempted.
Australia inventory (AICS) : All components are listed or exempted.
Canada inventory (DSL) : All components are listed or exempted.
China inventory (IECSC) : All components are listed or exempted.
Europe inventory (REACH) : Please contact your supplier for information on the inventory status of this material.
Japan inventory (ENCS) : Not determined.
Korea inventory (KECI) : All components are listed or exempted.
New Zealand (NZIoC) : Substance Use Restricted
Philippines inventory (PICCS) : All components are listed or exempted.

United States

SARA 302/304/311/312 extremely hazardous substances: No products were found.
SARA 302/304 emergency planning and notification: No products were found.
SARA 302/304/311/312 hazardous chemicals: xylene; aluminium hydroxide; titanium dioxide; propan-2-ol; 4-hydroxy-4-methylpentan-2-one; 1,2,4-trimethylbenzene
CERCLA: Hazardous substances.: ethylbenzene: 1000 lbs. (454 kg); m-xylene: 1000 lbs. (454 kg); xylene: 100 lbs. (45.4 kg); 2-(propyloxy)ethanol; cumene: 5000 lbs. (2270 kg); butan-1-ol: 5000 lbs. (2270 kg);

SARA 311/312 MSDS Distribution - Chemical Inventory - Hazard Identification:

Chemical name	CAS #	Acute	Chronic	Fire	Reactive	Pressure

Powered by ATRION

15 . Regulatory information

titanium dioxide	13463-67-7	N	Y	N	N	N
NJTS 80100337-5132	Proprietary	Y	N	N	N	N
propan-2-ol	67-63-0	Y	N	Y	N	N
Solvent naphtha (petroleum), light arom.	64742-95-6	Y	N	Y	N	N
xylene	1330-20-7	Y	N	Y	N	N
1,2,4-trimethylbenzene	95-63-6	Y	N	Y	N	N
aluminium hydroxide	21645-51-2	N	N	N	N	N
2-(propyloxy)ethanol	2807-30-9	Y	N	Y	N	N
4-hydroxy-4-methylpentan-2-one	123-42-2	Y	N	Y	N	N
ethylbenzene	100-41-4	Y	Y	Y	N	N
cumene	98-82-8	Y	Y	Y	N	N
Product as-supplied :		Y	Y	Y	N	N

SARA 313
Supplier notification

Chemical name	CAS number	Concentration
propan-2-ol	67-63-0	5 - 10
xylene	1330-20-7	3 - 7
1,2,4-trimethylbenzene	95-63-6	1 - 5
2-(propyloxy)ethanol	2807-30-9	1 - 5
ethylbenzene	100-41-4	0.1 - 1

Additional environmental information is contained on the Environmental Data Sheet for this product, which can be obtained from your PPG representative.

California Prop. 65

WARNING: This product contains a chemical known to the State of California to cause cancer.

Canada

WHMIS (Canada) : Class B-2: Flammable liquid with a flash point lower than 37.8°C (100°F). Class D-1B: Material causing immediate and serious toxic effects (Toxic). Class D-2A: Material causing other toxic effects (Very toxic). Class D-2B: Material causing other toxic effects (Toxic).

Mexico

Classification

Flammability : 3 **Health :** 3 **Reactivity :** 0

16 . Other information

Hazardous Material Information System (U.S.A.)

Health : 3 * **Flammability :** 3 **Physical hazards :** 0
(*) - Chronic effects

Caution: HMIS® ratings are based on a 0-4 rating scale, with 0 representing minimal hazards or risks, and 4 representing significant hazards or risks Although HMIS® ratings are not required on MSDSs under 29 CFR 1910. 1200, the preparer may choose to provide them. HMIS® ratings are to be used with a fully implemented HMIS® program. HMIS® is a registered mark of the National Paint & Coatings Association (NPCA). HMIS® materials may be purchased exclusively from J. J. Keller (800) 327-6868.

The customer is responsible for determining the PPE code for this material.

National Fire Protection Association (U.S.A.)

Health : 3 **Flammability :** 3 **Instability :** 0

Date of previous issue : **8/14/2012.**

Organization that prepared the MSDS : EHS

Indicates information that has changed from previously issued version.

Disclaimer

Powered by ATRION

16 . Other information

The information contained in this data sheet is based on present scientific and technical knowledge. The purpose of this information is to draw attention to the health and safety aspects concerning the products supplied by PPG, and to recommend precautionary measures for the storage and handling of the products. No warranty or guarantee is given in respect of the properties of the products. No liability can be accepted for any failure to observe the precautionary measures described in this data sheet or for any misuse of the products.

Powered by ATRION

HPC/Industrial Maintenance **SPEEDHIDE® Interior/Exterior Aluminum Paint**

Generic Type

Modified Oleoresinous Varnish

General Description

Recommended to finish interior and exterior metal or wood where a metallic finish is desired, SPEEDHIDE® Aluminum Paint can be used for machinery, pipes, structural steel or other equipment in industrial environments. May be used to coat metals where the surface temperatures reach up to 450°F (232°C).

Recommended Uses

Aluminum
Ferrous Metal
Wood
Galvanized Steel

Features / Benefits

Heat Resistant to 450°F (232ºC)
Excellent Adhesion to Wood and Metal
Ready-Mixed Aluminum Color
Meets MPI Category #1, Aluminum Paint

Limitations of Use

Apply when air and surface temperatures are above 50° F (10° C), and surface temperature is at least 5° F (3°C) above the dew point. Avoid exterior application late in the day when dew and condensation are likely to form or if rain is threatening. Not recommended for immersion service For Professional Use Only; Not Intended for Household Use. This product contains a leafing aluminum pigment and may be very slow to reach full cure, particularly in humid conditions. Aluminum may rub off for an extended period of time. Drying times listed may vary depending on temperature, humidity, color and air movement.

Tinting and Base Information

Do Not Tint

6-230	Aluminum

Product Data

Gloss:	Semi-Gloss (typically)
VOC*:	3.57 lbs/gal 427.60 g/L
Coverage:	500 to 750 sq ft/gal (46 to 69 sq. m/3.78L)

Note: Does not include loss due to varying application method, surface porosity, or mixing.

DFT:	1.0 minimum to 1.5 maximum
Weight/Gallon*:	8.0 lbs. (3.7 kg) +/- 0.2 lbs. (91 g)
Volume Solids*:	46.8% +/- 2%
Weight Solids*:	55.7% +/- 2%
Clean-up:	Paint Thinner

Results will vary by color, thinning and other additives.
*Product data calculated on full formula

Drying Time:

To Touch:	6-8 hours
To Recoat:	24-30 hours

Dry Time @77°F (25°C); 50% relative humidity

In Service Temperature:

Dry Heat (F): 450° Dry Heat (C): 232°

Flash Point: 114°F, (45.6°C)

SPEEDHIDE® 6-230

HPC/Industrial Maintenance **SPEEDHIDE® Interior/Exterior Aluminum Paint**

General Surface Preparation

The surface to be coated must be dimensionally stable, dry, clean, and free of oil, grease, release agents, curing compounds, and other foreign materials. The service life of the coating is directly related to the surface preparation. Follow SSPC-SP2 for hand cleaning of metal as a minimum for surface preparation. Dry and bare surfaces should be spot primed with the proper metal or wood primer, following surface preparation recommendations and recoat times stated on the primer label. On exterior surfaces, remove and inhibit regrowth of mildew by using PPG Mildew Check Multi-Purpose Wash, 18-1. Before use, be sure to read and follow the instructions and warnings on the label. WARNING! If you scrape, sand, or remove old paint, you may release lead dust or fumes. LEAD IS TOXIC. EXPOSURE TO LEAD DUST OR FUMES CAN CAUSE SERIOUS ILLNESS, SUCH AS BRAIN DAMAGE, ESPECIALLY IN CHILDREN. PREGNANT WOMEN SHOULD ALSO AVOID EXPOSURE. Wear a properly fitted NIOSH-approved respirator and prevent skin contact to control lead exposure. Clean up carefully with a HEPA vacuum and a wet mop. Before you start, find out how to protect yourself and your family by contacting the USEPA National Lead Information Hotline at 1-800-424-LEAD or log on to www.epa.gov/lead. In Canada contact a regional Health Canada office. Follow these instructions to control exposure to other hazardous substances that may be released during surface preparation.

ALUMINUM: Solvent Clean per SSPC-SP1 to remove grease and oil.

FERROUS METAL: Rust and other surface contaminants must be removed. Then the surface thoroughly cleaned to remove all other contaminants.

GALVANIZED STEEL: Solvent Clean per SSPC-SP1 to remove grease and oils. If any oxidation (white rust) has formed, sand and remove all forms of contamination. If the galvanized has been passivated or stabilized, the surface must be abraded, i.e., Brush-Off Blast Clean per SSPC-SP7 or chemically treat the surface.

WOOD: Sand lightly in order to remove surface roughness and loose wood fibers. Then remove all dirt, dust, grime and any other forms of contamination. Remove grease and oils by Solvent Cleaning per SSPC-SP1.

Heat resistance to 450°F requires near white metal blast per SSPC-SP10.

HPC Systems in Detail Brochure (H13905) Coating System 203-HD.

Recommended Primers

Interior Wood	17-921, 17-955, 17-956
Aluminum	6-204, 90-712
Ferrous Metal	6-208, 6-212, 90-712
Galvanized Steel	6-209, 90-712
Exterior Wood	6-809, 6-9, 17-921

Application Information

Recommended Spread Rates:

Wet Mils :	2.1	minimum to	3.2	maximum
Wet Microns:	53.8	minimum to	81.9	maximum
Dry Mils :	1.0	minimum to	1.5	maximum
Dry Microns:	25.4	minimum to	38.4	maximum

Application Equipment: Changes in application equipment, pressures and/or tip sizes may be required depending on ambient temperatures and application conditions. Spray equipment must be handled with due care and in accordance with manufacturer's recommendation. High-pressure injection of coatings into the skin by airless equipment may cause serious injury.

Conventional Spray: Fluid Nozzle: DeVilbiss MBC-510 gun, with 704 air cap with E tip and needle, or comparable equipment.

Airless Spray: Pressure 2000-2500 psi, tip 0.013" - 0.015"

Brush: Polyester/Nylon Brush

Roller: Not Recommended

Thinning:
DO NOT THIN.

Directions for Use

Stir thoroughly before using and frequently during use. USE WITH ADEQUATE VENTILATION. KEEP OUT OF REACH OF CHILDREN. Explosion-proof equipment must be used when coating with these materials in confined areas. Keep containers closed and away from heat, sparks, and flames when not in use. Read all label and Material Safety Data Sheet (MSDS) information prior to use. MSDS are available through our website or by calling 1-800-441-9695.

Permissible temperatures during application:

Material:	60 to 90°F	15 to 32°C
Ambient:	50 to 100°F	10 to 38°C
Substrate:	50 to 100°F	10 to 38°C

Packaging: 1-Gallon (3.78L) 5-Gallon (18.9L)

Not all products are available in all sizes. All containers are not full-filled.

PPGAF believes the technical data presented is currently accurate: however, no guarantee of accuracy, comprehensiveness, or performance is given or implied. Improvements in coatings technology may cause future technical data to vary from what is in this bulletin. For complete, up-to-date technical information, visit our web site or call 1-800-441-9695.

PPG Industries, Inc.
Architectural Coatings
One PPG Place
Pittsburgh, PA 15272
www.ppghpc.com

Technical Services
1-800-441-9695
1-888-807-5123 fax

Architect/Specifier
1-888-PPG-IDEA

PPG Architectural Finishes
400 S. 13th Street
Louisville, KY 40203

PPG Canada, Inc.
Architectural Coatings
4 Kenview Blvd
Brampton, ON L6T 5E4

SAFETY DATA SHEET

Date of issue/Date of revision 1 May 2016
Version 5

Section 1. Identification

Product name : 6-230 SPEEDHIDE ALUMINUM PAINT
Product code : 00352888
Other means of identification : Not available.
Product type : Liquid.

Relevant identified uses of the substance or mixture and uses advised against

Product use : Industrial applications, Used by spraying.
Use of the substance/ mixture : Coating.
Uses advised against : Not applicable.

Manufacturer : PPG Industries, Inc.
One PPG Place
Pittsburgh, PA 15272
Emergency telephone number : (412) 434-4515 (U.S.)
(514) 645-1320 (Canada)
01-800-00-21-400 (Mexico)
Technical Phone Number : 888-977-4762

Section 2. Hazards identification

OSHA/HCS status : This material is considered hazardous by the OSHA Hazard Communication Standard (29 CFR 1910.1200).
Classification of the substance or mixture : FLAMMABLE LIQUIDS - Category 3
EYE IRRITATION - Category 2A
CARCINOGENICITY - Category 2
TOXIC TO REPRODUCTION (Fertility) - Category 2
SPECIFIC TARGET ORGAN TOXICITY (REPEATED EXPOSURE) (central nervous system (CNS)) - Category 1
Percentage of the mixture consisting of ingredient(s) of unknown toxicity: 54.2%

GHS label elements
Hazard pictograms :

Section 2. Hazards identification

Signal word : Danger

Hazard statements : Flammable liquid and vapor.
Causes serious eye irritation.
Suspected of damaging fertility.
Suspected of causing cancer.
Causes damage to organs through prolonged or repeated exposure. (central nervous system (CNS))

Precautionary statements

Prevention : Obtain special instructions before use. Do not handle until all safety precautions have been read and understood. Wear protective gloves. Wear eye or face protection. Wear protective clothing. Keep away from heat, hot surfaces, sparks, open flames and other ignition sources. No smoking. Use explosion-proof electrical, ventilating, lighting and all material-handling equipment. Use only non-sparking tools. Take precautionary measures against static discharge. Keep container tightly closed. Do not breathe vapor. Do not eat, drink or smoke when using this product. Wash hands thoroughly after handling.

Response : Get medical attention if you feel unwell. IF exposed or concerned: Get medical attention. IF ON SKIN (or hair): Take off immediately all contaminated clothing. Rinse skin with water or shower. IF IN EYES: Rinse cautiously with water for several minutes. Remove contact lenses, if present and easy to do. Continue rinsing. If eye irritation persists: Get medical attention.

Storage : Store locked up. Store in a well-ventilated place. Keep cool.

Disposal : Dispose of contents and container in accordance with all local, regional, national and international regulations.

Supplemental label elements : Sanding and grinding dusts may be harmful if inhaled. Repeated exposure to high vapor concentrations may cause irritation of the respiratory system and permanent brain and nervous system damage. Inhalation of vapor/aerosol concentrations above the recommended exposure limits causes headaches, drowsiness and nausea and may lead to unconsciousness or death. Avoid contact with skin and clothing. Wash thoroughly after handling. Emits toxic fumes when heated. DANGER - RAGS, STEEL WOOL OR WASTE SOAKED WITH THIS PRODUCT MAY SPONTANEOUSLY CATCH FIRE IF IMPROPERLY DISCARDED. IMMEDIATELY AFTER EACH USE, PLACE RAGS, STEEL WOOL OR WASTE IN A SEALED WATER-FILLED METAL CONTAINER.

Hazards not otherwise classified : Prolonged or repeated contact may dry skin and cause irritation.

Section 3. Composition/information on ingredients

Substance/mixture : Mixture

Product name : 6-230 SPEEDHIDE ALUMINUM PAINT

Section 3. Composition/information on ingredients

Ingredient name	%	CAS number
Stoddard solvent	≥20 - ≤50	8052-41-3
Solvent naphtha (petroleum), heavy arom.	≥1.0 - ≤5.0	64742-94-5
Solvent naphtha (petroleum), light aromatic	≥1.0 - ≤5.0	64742-95-6
1,2,4-trimethylbenzene	≥1.0 - ≤4.3	95-63-6
naphthalene	<1.0	91-20-3
cumene	<1.0	98-82-8
neodecanoic acid, cobalt salt	<1.0	27253-31-2

SUB codes represent substances without registered CAS Numbers.

Any concentration shown as a range is to protect confidentiality or is due to batch variation.

There are no additional ingredients present which, within the current knowledge of the supplier and in the concentrations applicable, are classified as hazardous to health or the environment and hence require reporting in this section.

Occupational exposure limits, if available, are listed in Section 8.

Section 4. First aid measures

If ingestion, irritation, any type of overexposure or symptoms of overexposure occur during or persists after use of this product, contact a POISON CONTROL CENTER, EMERGENCY ROOM OR PHYSICIAN immediately; have Safety Data Sheet information available. Never give anything by mouth to an unconscious or convulsing person.

Description of necessary first aid measures

Eye contact : Remove contact lenses, irrigate copiously with clean, fresh water, holding the eyelids apart for at least 10 minutes and seek immediate medical advice.

Inhalation : Remove to fresh air. Keep person warm and at rest. If not breathing, if breathing is irregular or if respiratory arrest occurs, provide artificial respiration or oxygen by trained personnel.

Skin contact : Remove contaminated clothing and shoes. Wash skin thoroughly with soap and water or use recognized skin cleanser. Do NOT use solvents or thinners.

Ingestion : If swallowed, seek medical advice immediately and show this container or label. Keep person warm and at rest. Do NOT induce vomiting.

Most important symptoms/effects, acute and delayed

Potential acute health effects

Eye contact : Causes serious eye irritation.

Inhalation : No known significant effects or critical hazards.

Skin contact : Defatting to the skin. May cause skin dryness and irritation.

Ingestion : No known significant effects or critical hazards.

Over-exposure signs/symptoms

Eye contact : Adverse symptoms may include the following:
pain or irritation
watering
redness

Inhalation : Adverse symptoms may include the following:
reduced fetal weight
increase in fetal deaths
skeletal malformations

Section 4. First aid measures

Skin contact : Adverse symptoms may include the following:
irritation
dryness
cracking
reduced fetal weight
increase in fetal deaths
skeletal malformations

Ingestion : Adverse symptoms may include the following:
reduced fetal weight
increase in fetal deaths
skeletal malformations

Indication of immediate medical attention and special treatment needed, if necessary

Notes to physician : Treat symptomatically. Contact poison treatment specialist immediately if large quantities have been ingested or inhaled.

Specific treatments : No specific treatment.

Protection of first-aiders : No action shall be taken involving any personal risk or without suitable training. It may be dangerous to the person providing aid to give mouth-to-mouth resuscitation.

See toxicological information (Section 11)

Section 5. Fire-fighting measures

Extinguishing media

Suitable extinguishing media : Use dry chemical, CO_2, water spray (fog) or foam.

Unsuitable extinguishing media : Do not use water jet.

Specific hazards arising from the chemical : Flammable liquid and vapor. In a fire or if heated, a pressure increase will occur and the container may burst, with the risk of a subsequent explosion. Vapors may accumulate in low or confined areas or travel a considerable distance to a source of ignition and flash back. Runoff to sewer may create fire or explosion hazard. This material is harmful to aquatic life with long lasting effects. Fire water contaminated with this material must be contained and prevented from being discharged to any waterway, sewer or drain.

Hazardous thermal decomposition products : Decomposition products may include the following materials:
carbon dioxide
carbon monoxide
metal oxide/oxides

Special protective actions for fire-fighters : Promptly isolate the scene by removing all persons from the vicinity of the incident if there is a fire. No action shall be taken involving any personal risk or without suitable training. Move containers from fire area if this can be done without risk. Use water spray to keep fire-exposed containers cool.

Special protective equipment for fire-fighters : Fire-fighters should wear appropriate protective equipment and self-contained breathing apparatus (SCBA) with a full face-piece operated in positive pressure mode.

Section 6. Accidental release measures

Personal precautions, protective equipment and emergency procedures

For non-emergency personnel : No action shall be taken involving any personal risk or without suitable training. Evacuate surrounding areas. Keep unnecessary and unprotected personnel from entering. Do not touch or walk through spilled material. Shut off all ignition sources. No flares, smoking or flames in hazard area. Avoid breathing vapor or mist. Provide adequate ventilation. Wear appropriate respirator when ventilation is inadequate. Put on appropriate personal protective equipment.

For emergency responders : If specialized clothing is required to deal with the spillage, take note of any information in Section 8 on suitable and unsuitable materials. See also the information in "For non-emergency personnel".

Environmental precautions : Avoid dispersal of spilled material and runoff and contact with soil, waterways, drains and sewers. Inform the relevant authorities if the product has caused environmental pollution (sewers, waterways, soil or air). Water polluting material. May be harmful to the environment if released in large quantities.

Methods and materials for containment and cleaning up

Small spill : Stop leak if without risk. Move containers from spill area. Use spark-proof tools and explosion-proof equipment. Dilute with water and mop up if water-soluble. Alternatively, or if water-insoluble, absorb with an inert dry material and place in an appropriate waste disposal container. Dispose of via a licensed waste disposal contractor.

Large spill : Stop leak if without risk. Move containers from spill area. Use spark-proof tools and explosion-proof equipment. Approach release from upwind. Prevent entry into sewers, water courses, basements or confined areas. Wash spillages into an effluent treatment plant or proceed as follows. Contain and collect spillage with non-combustible, absorbent material e.g. sand, earth, vermiculite or diatomaceous earth and place in container for disposal according to local regulations (see Section 13). Dispose of via a licensed waste disposal contractor. Contaminated absorbent material may pose the same hazard as the spilled product. Note: see Section 1 for emergency contact information and Section 13 for waste disposal.

Section 7. Handling and storage

Precautions for safe handling

Protective measures : Put on appropriate personal protective equipment (see Section 8). Avoid exposure - obtain special instructions before use. Avoid exposure during pregnancy. Do not handle until all safety precautions have been read and understood. Do not get in eyes or on skin or clothing. Do not breathe vapor or mist. Do not ingest. Avoid release to the environment. Use only with adequate ventilation. Wear appropriate respirator when ventilation is inadequate. Do not enter storage areas and confined spaces unless adequately ventilated. Keep in the original container or an approved alternative made from a compatible material, kept tightly closed when not in use. Store and use away from heat, sparks, open flame or any other ignition source. Use explosion-proof electrical (ventilating, lighting and material handling) equipment. Use only non-sparking tools. Take precautionary measures against electrostatic discharges. Empty containers retain product residue and can be hazardous. Do not reuse container.

Section 7. Handling and storage

Special precautions : Ingestion of product or cured coating may be harmful. Vapors may accumulate in low or confined areas or travel a considerable distance to a source of ignition and flash back. Vapors are heavier than air and may spread along floors. Materials such as cleaning rags, paper wipes and protective clothing, which are contaminated with the product may spontaneously self-ignite some hours later. To avoid the risks of fires, all contaminated materials should be stored in purpose-built containers or in metal containers with tight-fitting, self-closing lids. Contaminated materials should be removed from the workplace at the end of each working day and be stored outside. If this material is part of a multiple component system, read the Safety Data Sheet(s) for the other component or components before blending as the resulting mixture may have the hazards of all of its parts.

Advice on general occupational hygiene : Eating, drinking and smoking should be prohibited in areas where this material is handled, stored and processed. Workers should wash hands and face before eating, drinking and smoking. Remove contaminated clothing and protective equipment before entering eating areas. See also Section 8 for additional information on hygiene measures.

Conditions for safe storage, including any incompatibilities : Do not store above the following temperature: 35°C (95°F). Store in accordance with local regulations. Store in a segregated and approved area. Store in original container protected from direct sunlight in a dry, cool and well-ventilated area, away from incompatible materials (see Section 10) and food and drink. Eliminate all ignition sources. Separate from oxidizing materials. Keep container tightly closed and sealed until ready for use. Containers that have been opened must be carefully resealed and kept upright to prevent leakage. Do not store in unlabeled containers. Use appropriate containment to avoid environmental contamination.

Section 8. Exposure controls/personal protection

Control parameters

Occupational exposure limits

Ingredient name	Exposure limits
Stoddard solvent	**ACGIH TLV (United States, 3/2015).** TWA: 525 mg/m³ 8 hours. TWA: 100 ppm 8 hours. **OSHA PEL (United States, 2/2013).** TWA: 2900 mg/m³ 8 hours. TWA: 500 ppm 8 hours.
Solvent naphtha (petroleum), heavy arom.	None.
Solvent naphtha (petroleum), light aromatic	None.
1,2,4-trimethylbenzene	**ACGIH TLV (United States, 3/2015).** TWA: 123 mg/m³ 8 hours. TWA: 25 ppm 8 hours.
naphthalene	**ACGIH TLV (United States, 3/2015).** **Absorbed through skin.** TWA: 52 mg/m³ 8 hours. TWA: 10 ppm 8 hours. **OSHA PEL (United States, 2/2013).** TWA: 50 mg/m³ 8 hours. TWA: 10 ppm 8 hours.
cumene	**ACGIH TLV (United States, 3/2015).** TWA: 50 ppm 8 hours.

Section 8. Exposure controls/personal protection

neodecanoic acid, cobalt salt	**OSHA PEL (United States, 2/2013).** **Absorbed through skin.** TWA: 245 mg/m³ 8 hours. TWA: 50 ppm 8 hours. **ACGIH TLV (United States, 3/2015).** TWA: 0.02 mg/m³, (as Co) 8 hours.

Key to abbreviations

A	=	Acceptable Maximum Peak	S	=	Potential skin absorption
ACGIH	=	American Conference of Governmental Industrial Hygienists.	SR	=	Respiratory sensitization
C	=	Ceiling Limit	SS	=	Skin sensitization
F	=	Fume	STEL	=	Short term Exposure limit values
IPEL	=	Internal Permissible Exposure Limit	TD	=	Total dust
OSHA	=	Occupational Safety and Health Administration.	TLV	=	Threshold Limit Value
R	=	Respirable	TWA	=	Time Weighted Average
Z	=	OSHA 29 CFR 1910.1200 Subpart Z - Toxic and Hazardous Substances			

Consult local authorities for acceptable exposure limits.

Recommended monitoring procedures : If this product contains ingredients with exposure limits, personal, workplace atmosphere or biological monitoring may be required to determine the effectiveness of the ventilation or other control measures and/or the necessity to use respiratory protective equipment. Reference should be made to appropriate monitoring standards. Reference to national guidance documents for methods for the determination of hazardous substances will also be required.

Appropriate engineering controls : Use only with adequate ventilation. Use process enclosures, local exhaust ventilation or other engineering controls to keep worker exposure to airborne contaminants below any recommended or statutory limits. The engineering controls also need to keep gas, vapor or dust concentrations below any lower explosive limits. Use explosion-proof ventilation equipment.

Environmental exposure controls : Emissions from ventilation or work process equipment should be checked to ensure they comply with the requirements of environmental protection legislation. In some cases, fume scrubbers, filters or engineering modifications to the process equipment will be necessary to reduce emissions to acceptable levels.

Individual protection measures

Hygiene measures : Wash hands, forearms and face thoroughly after handling chemical products, before eating, smoking and using the lavatory and at the end of the working period. Appropriate techniques should be used to remove potentially contaminated clothing. Wash contaminated clothing before reusing. Ensure that eyewash stations and safety showers are close to the workstation location.

Eye/face protection : Chemical splash goggles.

Skin protection

Hand protection : Chemical-resistant, impervious gloves complying with an approved standard should be worn at all times when handling chemical products if a risk assessment indicates this is necessary. Considering the parameters specified by the glove manufacturer, check during use that the gloves are still retaining their protective properties. It should be noted that the time to breakthrough for any glove material may be different for different glove manufacturers. In the case of mixtures, consisting of several substances, the protection time of the gloves cannot be accurately estimated.

Section 8. Exposure controls/personal protection

Gloves : For prolonged or repeated handling, use the following type of gloves:

Recommended: nitrile rubber

Body protection : Personal protective equipment for the body should be selected based on the task being performed and the risks involved and should be approved by a specialist before handling this product. When there is a risk of ignition from static electricity, wear anti-static protective clothing. For the greatest protection from static discharges, clothing should include anti-static overalls, boots and gloves.

Other skin protection : Appropriate footwear and any additional skin protection measures should be selected based on the task being performed and the risks involved and should be approved by a specialist before handling this product.

Respiratory protection : Respirator selection must be based on known or anticipated exposure levels, the hazards of the product and the safe working limits of the selected respirator. If workers are exposed to concentrations above the exposure limit, they must use appropriate, certified respirators. Use a properly fitted, air-purifying or air-fed respirator complying with an approved standard if a risk assessment indicates this is necessary.

Section 9. Physical and chemical properties

Appearance

Physical state : Liquid.

Color : Not available.

Odor : Characteristic.

Odor threshold : Not available.

pH : Not available.

Melting point : Not available.

Boiling point : >37.78°C (>100°F)

Flash point : Closed cup: 48.89°C (120°F)

Material supports combustion. : Yes.

Auto-ignition temperature : Not available.

Decomposition temperature : Not available.

Flammability (solid, gas) : Not available.

Lower and upper explosive (flammable) limits : Lower: 0.84%
Upper: 1.14%

Evaporation rate : Not available.

Vapor pressure : Not available.

Vapor density : Not available.

Relative density : 0.96

Density (lbs / gal) : 8.01

Solubility : Insoluble in the following materials: cold water.

Partition coefficient: n-octanol/water : Not available.

Viscosity : Kinematic (40°C (104°F)): >0.21 cm^2/s (>21 cSt)

Volatility : 53% (v/v), 44.174% (w/w)

Section 9. Physical and chemical properties

% Solid. (w/w) : 55.826

Section 10. Stability and reactivity

Reactivity : No specific test data related to reactivity available for this product or its ingredients.

Chemical stability : The product is stable.

Possibility of hazardous reactions : Under normal conditions of storage and use, hazardous reactions will not occur.

Conditions to avoid : When exposed to high temperatures may produce hazardous decomposition products. Refer to protective measures listed in sections 7 and 8.

Incompatible materials : Keep away from the following materials to prevent strong exothermic reactions: oxidizing agents, strong alkalis, strong acids.

Hazardous decomposition products : Decomposition products may include the following materials: carbon monoxide, carbon dioxide, smoke, oxides of nitrogen.

Section 11. Toxicological information

Information on toxicological effects

Acute toxicity

Product/ingredient name	Result	Species	Dose	Exposure
Stoddard solvent	LD50 Oral	Rat	>5 g/kg	-
Solvent naphtha (petroleum), heavy arom.	LD50 Dermal	Rabbit	>1.693 g/kg	-
	LD50 Oral	Rat	3.2 g/kg	-
Solvent naphtha (petroleum), light aromatic	LD50 Dermal	Rabbit	3.48 g/kg	-
	LD50 Oral	Rat	8400 mg/kg	-
1,2,4-trimethylbenzene	LC50 Inhalation Vapor	Rat	18000 mg/m³	4 hours
	LD50 Oral	Rat	5 g/kg	-
naphthalene	LD50 Dermal	Rabbit	>20 g/kg	-
	LD50 Oral	Rat	490 mg/kg	-
cumene	LC50 Inhalation Vapor	Rat	39000 mg/m³	4 hours
	LD50 Dermal	Rabbit	12.3 g/kg	-
	LD50 Oral	Rat	1400 mg/kg	-

Conclusion/Summary : There are no data available on the mixture itself.

Irritation/Corrosion

Conclusion/Summary

Skin : There are no data available on the mixture itself.

Eyes : There are no data available on the mixture itself.

Respiratory : There are no data available on the mixture itself.

Sensitization

Section 11. Toxicological information

Conclusion/Summary

Skin : There are no data available on the mixture itself.

Respiratory : There are no data available on the mixture itself.

Mutagenicity

Conclusion/Summary : There are no data available on the mixture itself.

Carcinogenicity

Conclusion/Summary : There are no data available on the mixture itself.

Classification

Product/ingredient name	OSHA	IARC	NTP
naphthalene	-	2B	Reasonably anticipated to be a human carcinogen.
cumene	-	2B	Reasonably anticipated to be a human carcinogen.
neodecanoic acid, cobalt salt	-	2B	-

Carcinogen Classification code:

IARC: 1, 2A, 2B, 3, 4
NTP: Known to be a human carcinogen; Reasonably anticipated to be a human carcinogen
OSHA: +
Not listed/not regulated: -

Reproductive toxicity

Conclusion/Summary : There are no data available on the mixture itself.

Teratogenicity

Conclusion/Summary : There are no data available on the mixture itself.

Specific target organ toxicity (single exposure)

Name	Category
Solvent naphtha (petroleum), heavy arom.	Category 3
Solvent naphtha (petroleum), light aromatic	Category 3
1,2,4-trimethylbenzene	Category 3
cumene	Category 3

Specific target organ toxicity (repeated exposure)

Name	Category
Stoddard solvent	Category 1
naphthalene	Category 2
cumene	Category 2

Target organs : Contains material which causes damage to the following organs: brain, central nervous system (CNS), eye, lens or cornea.
Contains material which may cause damage to the following organs: blood, kidneys, lungs, the nervous system, liver, upper respiratory tract, skin, testes.

Aspiration hazard

Name	Result
Stoddard solvent	ASPIRATION HAZARD - Category 1
Solvent naphtha (petroleum), heavy arom.	ASPIRATION HAZARD - Category 1
Solvent naphtha (petroleum), light aromatic	ASPIRATION HAZARD - Category 1
cumene	ASPIRATION HAZARD - Category 1

Section 11. Toxicological information

Information on the likely routes of exposure

Potential acute health effects

Eye contact : Causes serious eye irritation.

Inhalation : No known significant effects or critical hazards.

Skin contact : Defatting to the skin. May cause skin dryness and irritation.

Ingestion : No known significant effects or critical hazards.

Over-exposure signs/symptoms

Eye contact : Adverse symptoms may include the following:
pain or irritation
watering
redness

Inhalation : Adverse symptoms may include the following:
reduced fetal weight
increase in fetal deaths
skeletal malformations

Skin contact : Adverse symptoms may include the following:
irritation
dryness
cracking
reduced fetal weight
increase in fetal deaths
skeletal malformations

Ingestion : Adverse symptoms may include the following:
reduced fetal weight
increase in fetal deaths
skeletal malformations

Delayed and immediate effects and also chronic effects from short and long term exposure

Conclusion/Summary : There are no data available on the mixture itself. Exposure to component solvent vapor concentrations in excess of the stated occupational exposure limit may result in adverse health effects such as mucous membrane and respiratory system irritation and adverse effects on the kidneys, liver and central nervous system. Symptoms and signs include headache, dizziness, fatigue, muscular weakness, drowsiness and, in extreme cases, loss of consciousness. Solvents may cause some of the above effects by absorption through the skin. There is some evidence that repeated exposure to organic solvent vapors in combination with constant loud noise can cause greater hearing loss than expected from exposure to noise alone. If splashed in the eyes, the liquid may cause irritation and reversible damage. Ingestion may cause nausea, diarrhea and vomiting. This takes into account, where known, delayed and immediate effects and also chronic effects of components from short-term and long-term exposure by oral, inhalation and dermal routes of exposure and eye contact.

Short term exposure

Potential immediate effects : There are no data available on the mixture itself.

Potential delayed effects : There are no data available on the mixture itself.

Long term exposure

Potential immediate effects : There are no data available on the mixture itself.

Potential delayed effects : There are no data available on the mixture itself.

Section 11. Toxicological information

Potential chronic health effects

General : Causes damage to organs through prolonged or repeated exposure. Prolonged or repeated contact can defat the skin and lead to irritation, cracking and/or dermatitis.

Carcinogenicity : Suspected of causing cancer. Risk of cancer depends on duration and level of exposure.

Mutagenicity : No known significant effects or critical hazards.

Teratogenicity : No known significant effects or critical hazards.

Developmental effects : No known significant effects or critical hazards.

Fertility effects : Suspected of damaging fertility.

Numerical measures of toxicity

Acute toxicity estimates

Route	ATE value
Oral	33679.7 mg/kg
Dermal	10355.1 mg/kg
Inhalation (gases)	201431.2 ppm
Inhalation (vapors)	805.7 mg/l
Inhalation (dusts and mists)	67.14 mg/l

Section 12. Ecological information

Toxicity

Not available.

Persistence and degradability

Not available.

Bioaccumulative potential

Product/ingredient name	$LogP_{ow}$	BCF	Potential
Stoddard solvent	3.16 to 7.06	-	high
1,2,4-trimethylbenzene	3.63	120.23	low
naphthalene	3.3	85.11	low
cumene	3.66	35.48	low

Mobility in soil

Soil/water partition coefficient (K_{OC}) : Not available.

Section 13. Disposal considerations

Disposal methods : The generation of waste should be avoided or minimized wherever possible. Disposal of this product, solutions and any by-products should at all times comply with the requirements of environmental protection and waste disposal legislation and any regional local authority requirements. Dispose of surplus and non-recyclable products via a licensed waste disposal contractor. Waste should not be disposed of untreated to the sewer unless fully compliant with the requirements of all authorities with jurisdiction. Waste packaging should be recycled. Incineration or landfill should only be considered when recycling is not feasible. This material and its container must be disposed of in a safe way. Care should be taken when handling emptied containers that have not been cleaned or rinsed out. Empty containers or liners may retain some product residues. Vapor from product residues may create a highly flammable or explosive atmosphere inside the container. Do not cut, weld or grind used containers unless they have been cleaned thoroughly internally. Avoid dispersal of spilled material and runoff and contact with soil, waterways, drains and sewers.

Disposal should be in accordance with applicable regional, national and local laws and regulations.

Refer to Section 7: HANDLING AND STORAGE and Section 8: EXPOSURE CONTROLS/PERSONAL PROTECTION for additional handling information and protection of employees. Section 6. Accidental release measures

14. Transport information

	DOT	IMDG	IATA
UN number	UN1263	UN1263	UN1263
UN proper shipping name	PAINT	PAINT	PAINT
Transport hazard class (es)	3	3	3
Packing group	III	III	III
Environmental hazards	No.	No.	No.
Marine pollutant substances	Not applicable.	Not applicable.	Not applicable.
Product RQ (lbs)	19546.5	Not applicable.	Not applicable.
RQ substances	(naphthalene, xylene)	Not applicable.	Not applicable.

Additional information

DOT : This product may be re-classified as "Combustible Liquid," unless transported by vessel or aircraft. Non-bulk packages (less than or equal to 119 gal) of combustible liquids are not regulated as hazardous materials in package sizes less than the product reportable quantity.

IMDG : The marine pollutant mark is not required when transported in sizes of ≤5 L or ≤5 kg.

IATA : The environmentally hazardous substance mark may appear if required by other transportation regulations.

Special precautions for user : **Transport within user's premises:** always transport in closed containers that are upright and secure. Ensure that persons transporting the product know what to do in the event of an accident or spillage.

Section 15. Regulatory information

United States

United States inventory (TSCA 8b) : All components are listed or exempted.

SARA 302/304

SARA 304 RQ : Not applicable.

Composition/information on ingredients

No products were found.

SARA 311/312

Classification : Fire hazard
Immediate (acute) health hazard
Delayed (chronic) health hazard

Composition/information on ingredients

Name	Fire hazard	Sudden release of pressure	Reactive	Immediate (acute) health hazard	Delayed (chronic) health hazard
Stoddard solvent	Yes.	No.	No.	Yes.	Yes.
Solvent naphtha (petroleum), heavy arom.	Yes.	No.	No.	Yes.	No.
Solvent naphtha (petroleum), light aromatic	Yes.	No.	No.	Yes.	No.
1,2,4-trimethylbenzene	Yes.	No.	No.	Yes.	No.
naphthalene	Yes.	No.	Yes.	Yes.	Yes.
cumene	Yes.	No.	No.	Yes.	Yes.
neodecanoic acid, cobalt salt	No.	No.	No.	Yes.	Yes.

SARA 313

Supplier notification :

Chemical name	CAS number	Concentration
Aluminium powder (stabilized)	7429-90-5	7 - 13
1,2,4-trimethylbenzene	95-63-6	0.5 - 1.5
naphthalene	91-20-3	0.1 - 1
neodecanoic acid, cobalt salt	27253-31-2	0.1 - 1

SARA 313 notifications must not be detached from the SDS and any copying and redistribution of the SDS shall include copying and redistribution of the notice attached to copies of the SDS subsequently redistributed.

Additional environmental information is contained on the Environmental Data Sheet for this product, which can be obtained from your PPG representative.

California Prop. 65

WARNING: This product contains a chemical known to the State of California to cause cancer.

Section 16. Other information

Hazardous Material Information System (U.S.A.)

Health : 2 * **Flammability** : 2 **Physical hazards** : 1

(*) - Chronic effects

Caution: HMIS® ratings are based on a 0-4 rating scale, with 0 representing minimal hazards or risks, and 4 representing significant hazards or risks Although HMIS® ratings are not required on MSDSs under 29 CFR 1910.1200, the preparer may choose to provide them. HMIS® ratings are to be used with a fully implemented HMIS® program. HMIS® is a registered mark of the National Paint & Coatings Association (NPCA). HMIS® materials may be purchased exclusively from J. J. Keller (800) 327-6868.

The customer is responsible for determining the PPE code for this material.

National Fire Protection Association (U.S.A.)

Health : 2 **Flammability** : 2 **Instability** : 1

Date of previous issue : **2/6/2016**

Organization that prepared the MSDS : EHS

Key to abbreviations : ATE = Acute Toxicity Estimate
BCF = Bioconcentration Factor
GHS = Globally Harmonized System of Classification and Labelling of Chemicals
IATA = International Air Transport Association
IBC = Intermediate Bulk Container
IMDG = International Maritime Dangerous Goods
LogPow = logarithm of the octanol/water partition coefficient
MARPOL = International Convention for the Prevention of Pollution From Ships, 1973 as modified by the Protocol of 1978. ("Marpol" = marine pollution)
UN = United Nations

Indicates information that has changed from previously issued version.

Disclaimer

The information contained in this data sheet is based on present scientific and technical knowledge. The purpose of this information is to draw attention to the health and safety aspects concerning the products supplied by PPG, and to recommend precautionary measures for the storage and handling of the products. No warranty or guarantee is given in respect of the properties of the products. No liability can be accepted for any failure to observe the precautionary measures described in this data sheet or for any misuse of the products.

GRIPPER®
Interior/Exterior Primer Sealer
3210-1200 White/3210-1300 Grey

Previously ICI Paints PREP & PRIME® GRIPPER® MULTI-PURPOSE
Interior/Exterior Water-Based Primer Sealer

DESCRIPTION

Our premium quality water-based acrylic multi-purpose bonding primer, fast drying, primer sealer and stain killer for use on all wood, masonry or previously painted surfaces. Suitable for interior or exterior applications. Provides excellent adhesion to a variety of surfaces including drywall, wood, cured plaster, masonry or galvanized metal and aluminum. An excellent stain killer for water stains, lipstick, smoke, ink, crayons and knots or sap streaks. Resists nail head and tannin staining over woods such as redwood or cedar. Resists checking and cracking when used over bare exterior plywood, T-1-11, Douglas fir or yellow pine. When tinted to the appropriate gray-tone, lessens number of coats required for deep-color topcoats. Highly alkali resistant. May be applied to new concrete or masonry surfaces with a pH up to 13.0 and prior to a 30 day cure.

CERTIFICATIONS

AS OF 7/1/2009, COMPLIES WITH	
MPI#	6, 17, 39, 137
LEED	Yes
CHPS	Yes
GREENGUARD	No
AIM	Yes
OTC/LADCO	Yes
CARB	Yes
SCAQMD	Yes

PERFORMANCE DATA

CHARACTERISTIC:	RESULTS:
Enamel Hold Out*	★★★★★★★☆☆☆
Adhesion to Substrate*	★★★★★★★★★☆
Dry Hide*	★★★★★★★★☆☆
Sag Resistance	12-18 mils wet
Air and Substrate Application Temperature	45° F (7° C) - 90° F (32° C)
Service Temperature Limits	200° F (93° C)
Storage Temperature	40° F (4° C) - 95° F (35° C)

*Performance ratings are based on product comparisons to other products in that sheen range, performed at 77° F (25° C) 50% RH. Rating scale is from 1-10, 10 being the highest rating.

COMPOSITION

- Waterborne Acrylic Resin
- Titanium Dioxide and Extender Pigments
- Not manufactured with lead or mercury containing materials.

SPECIFICATION

Color:
White (tintable, limit up to 2 oz/gal)
Grey (tintable. limit up to 7 oz/gal)

Clean-up Solvent:
Soap and water

Finish: Non-Flat
Gloss: >5 units maximum @ 60°

Density:
11.18 lbs/gal (1.34 kg/L)

Solids:
Volume - 46% +/- 1%
Weight - 59% +/- 1%

VOC:
100 g/L (0.84 lbs/gal) maximum
Refer to MSDS for regulatory VOC content of complete product line

Theoretical Coverage @ 1 mil dry:
740 sq ft/gal (18 m^2/L)

Practical Coverage:
Apply at 350-400 sq ft/gal (9-10 m²/L). Actual coverage may vary depending on substrate and application method.

Recommended Film Thickness:
4.0 - 4.6 mils wet
1.8 - 2.1 mils dry

Airless Spray Application:
Pressure - 2000 psi
Tip - .015" - .019"

Dry Time 77°F (25°C) & 50% RH:
To touch – 30 minutes
To recoat – 1 hour

Flame Spread Rating:
Class A (0-25) on non-combustible surfaces

Flash Point:
None

Shelf Life:
1 year minimum - unopened

SURFACE PREPARATION

GENERAL SURFACE PREPARATION:

All surfaces must be sound, dry, clean and free of oil, grease, dirt, rust, mildew, form release agents, curing compounds, loose and flaking paint and other foreign substances.

NEW SURFACES:

Concrete, Masonry and Plaster:

- Cure at least three days before painting, poured in place concrete must cure for at least seven days
- pH must be 13.0 or lower
- Roughen slick poured or precast concrete and remove sealers by chemical cleaning or abrasive method such as sandsweeping
- Rinse thoroughly with water and allow to dry
- Must be internally dry
- Remove loose aggregate
- Prime concrete and plaster with this product
- Fill concrete block with 3010 Concrete Coatings Block Filler or BLOXFIL® 4000 Interior/Exterior Heavy Duty Acrylic Block Filler

Fiber Cement Board:

- Prime entire surface and all edges with this product
- Caulk with an acrylic caulk

Drywall:

- Joint compound must dry for two days before priming
- Prime with this product

Wood:

- Interior, set nails, fill with latex spackle
- Sand smooth
- Dust clean
- Prime with this product or 1110 STAIN JAMMER® Alkyd Primer
- Exterior, spot prime pine knots with this product or 6001 Hydrosealer Exterior Primer
- Countersink nails, prime entire surface with this product or 6001 Hydrosealer Exterior Primer
- Slight discoloration on staining woods such as redwood or cedar is normal
- If discoloration is considerable, apply a second coat of this product or 6001 Hydrosealer Exterior Primer or for improved protection prime with 2110 Stain Stomper Exterior Primer Sealer
- Caulk with an acrylic caulk

Preprimed and Unprimed Hardboard:

- Prime entire surface and all edges with this product or 2110 Stain Stomper Exterior Primer Sealer
- Caulk with an acrylic caulk

Steel:

- Performance over hand or power tool cleaned surfaces is dependent on the degree of cleaning
- Clean off oils and other contaminants
- Prime with Devflex 4020PF Direct-to-Metal Primer, DEVGUARD® 4360 Low VOC Universal Primer or DEVGUARD 4160 Multi-Purpose Tank & Structural Primer

Galvanized Metal and Aluminum:

- Clean off oils and other contaminants
- Prime bare galvanized metal and aluminum with this product

PREVIOUSLY PAINTED SURFACES:

- Wash to remove contaminants
- Rinse thoroughly with water and allow to dry

SURFACE PREPARATION

CONTINUED

- Sanding not required if the surface is properly and thoroughly cleaned (scuff sanding is required only on glossy, hard, slick or dense surfaces which are subject to high levels of moisture)
- Remove loose paint
- Scrub heavy chalk areas and overhead areas such as eaves with soap and water
- Remove all mildew by washing with a solution of 16 oz (473 mL) liquid household bleach and two oz (59 mL) non-ammoniated liquid detergent per gallon (3.785 L) of water
- Rinse surfaces clean with water and allow to dry for 24 hours
- Prime bare areas with primer specified under **NEW SURFACES**
- **Weathered Aluminum and Vinyl Siding** - Remove dirt and chalk
- Prime with this product
- Do not repaint vinyl siding with colors darker than the original color; the siding may warp

WARNING! If you scrape, sand, or remove old paint, you may release lead dust. LEAD IS TOXIC. EXPOSURE TO LEAD DUST CAN CAUSE SERIOUS ILLNESS, SUCH AS BRAIN DAMAGE, ESPECIALLY IN CHILDREN. PREGNANT WOMEN SHOULD ALSO AVOID EXPOSURE. Wear an NIOSH-approved respirator to control lead exposure. Clean up carefully with a HEPA vacuum and a wet mop. Before you start, find out how to protect yourself and your family by contacting the National Lead Information Hotline at 1-800-424-LEAD or log on to www.epa.gov/lead.

PRECAUTIONS

WARNING! HARMFUL IF INHALED. MAY CAUSE CENTRAL NERVOUS SYSTEM EFFECTS, INCLUDING DIZZINESS, HEADACHE OR NAUSEA. CAUSES EYE, SKIN AND RESPIRATORY TRACT IRRITATION. MAY BE HARMFUL IF SWALLOWED. OVEREXPOSURE MAY CAUSE BLOOD, LIVER, KIDNEY DAMAGE. CONTAINS CRYSTALLINE SILICA WHICH CAN CAUSE LUNG CANCER AND OTHER LUNG DAMAGE IF INHALED. WHEN TINTED, CONTAINS ETHYLENE GLYCOL WHICH CAN CAUSE SEVERE KIDNEY DAMAGE WHEN INGESTED AND HAS BEEN SHOWN TO CAUSE BIRTH DEFECTS IN LABORATORY ANIMALS. USE ONLY WITH ADEQUATE VENTILATION. KEEP OUT OF THE REACH OF CHILDREN. NOTICE: Products in this series contain solvents. Reports have associated repeated and prolonged occupational overexposure to solvents with permanent brain and nervous system damage. Intentional misuse by deliberately concentrating and inhaling the contents may be harmful or fatal. For emergency information call (800) 545-2643. **Note: These warnings encompass the product series. Prior to use, read and follow product-specific MSDS and label information.** If sanding, wear a dust mask to avoid breathing of sanding dust. Do not breathe vapors or spray mist. Ensure fresh air entry during application and drying. Avoid contact with eyes and skin. If you experience eye watering, headaches, or dizziness, leave the area. If properly used, a respirator may offer additional protection. Obtain professional advice before using. Close container after each use. **FIRST AID**: For skin contact, wash thoroughly with soap and water. If any product remains, gently rub with petroleum jelly, vegetable or mineral/baby oil then wash again with soap and water. Repeat as needed. Remove contaminated clothing. For eye contact, flush immediately with plenty of water for at least 15 minutes. **Get medical attention**. If swallowed, **get medical attention immediately**. If inhalation causes discomfort, remove to fresh air. If discomfort persists or breathing difficulty occurs, get medical attention. **KEEP FROM FREEZING.** DS390-0306

DIRECTIONS FOR USE

TINTING:

White may be tinted with up to two oz/gal of DRAMATONE™ colorants. Grey may be tinted with up to seven oz/gal of DRAMATONE™ colorants. Tint to the appropriate gray-tone to lessen the number of coats required for deep-color topcoats.

SPREADING RATE:

Apply at 350-400 sq ft/gal (9-10 m²/L)). Actual coverage may vary depending on substrate and application method.

APPLICATION:

Mix thoroughly before use. May be applied by brush, roller or airless spray. Brushing is the preferred method of application over chalky substrates. For airless spray application, use a .015"-.019" tip at 2000 psi, adjust pressure as needed. Seals water stains, inks, crayon, ballpoint pen marks, lipstick, bleeding paints, knots, sap streaks, smoke stains. Some stains may require a second coat. Some highly water sensitive stains may require the application of 1110 STAIN JAMMER Alkyd Primer on interior surfaces or 2110 Stain Stomper Exterior Primer Sealer on exterior surfaces for best results. If painting will be interrupted for more than 15 minutes, keep brushes and rollers wet by wrapping them with tinfoil or plastic wrap. This will prevent the paint from drying in the equipment and will make clean up much easier when the job is finished. For exterior applications, do not apply when the surface or air temperature is below 45ºF (7ºC) or if rain, snow or heavy dew is expected within 48 hours. Provide good ventilation and warmth for normal drying.

DRYING TIME:

At 77ºF (25ºC) and 50% R.H., dries to touch in 30 minutes and to recoat in one hour. For maximum stain resistance, allow four hours before topcoating. Low temperature, high humidity, thick films or poor ventilation will increase these times.

CLEAN-UP:

Clean hands and tools immediately with warm, soapy water. Clean spills right away with a damp cloth.

SHIPPING

FREIGHT CLASSIFICATION:

Paint, Freezable

PACKAGING:

4 quart (0.946 L)
1 gallon (3.785 L)
5 gallons (18.925 L)

FLASH POINT:

None

www.gliddenprofessional.com

AkzoNobel
Akzo Nobel Paints LLC, Strongsville, Ohio 44136

Glidden PROFESSIONAL
www.gliddenprofessional.com

LIMITATION OF LIABILITY To the best of our knowledge, the technical data contained herein are true and accurate at the date of issuance but are subject to change without prior notice. We guarantee our product to conform to the specifications contained herein. WE MAKE NO OTHER WARRANTY OR GUARANTEE OF ANY KIND, EXPRESS OR IMPLIED, INCLUDING MERCHANTABILITY AND FITNESS FOR PARTICULAR PURPOSE. Liability, if any, is limited to replacement of the product or refund of the purchase price. LABOR OR COST OF LABOR AND OTHER CONSEQUENTIAL DAMAGES ARE HEREBY EXCLUDED.

DEVGUARD® 4306

DESCRIPTION

One-component, rust preventative semi-gloss alkyd enamel

PRINCIPAL CHARACTERISTICS

- Rust Inhibitive interior / exterior alky eggshell enamel
- Suitable for residential and commercial applications
- Ideal for safety equipment and pipe identification
- Good abrasion resistance
- Excellent resistance to grease, oil, and water

COLOR AND GLOSS LEVEL

- Custom colors, white
- Semi-gloss

BASIC DATA AT 68°F (20°C)

Data for product	
Number of components	One
Volume solids	54 ± 2%
VOC (Supplied)	max. 3.0 lb/US gal (approx. 362 g/l)
Recommended dry film thickness	2.0 - 2.4 mils (50 - 61 µm) depending on system
Theoretical spreading rate	433 ft^2/US gal for 2.0 mils (10.8 m^2/l for 50 µm)
Shelf life	At least 12 months when stored cool and dry

Notes:
- See ADDITIONAL DATA – Overcoating intervals
- See ADDITIONAL DATA – Curing time

RECOMMENDED SUBSTRATE CONDITIONS AND TEMPERATURES

- Coating performance is, in general, proportional to the degree of surface preparation

Steel

- Remove all rust, dirt, moisture, grease or other contaminants from the surface
- Abrasive blast cleaning to SSPC SP-6 standards will give optimum performance
- Where abrasive blasting is not practical, power tool cleaning in accordance with SSPC SP-3 or hand tool cleaning to SSPC SP-2 requirements is acceptable
- Prime with DEVGUARD 4141 or DEVGUARD 4360

PPG Protective & Marine Coatings
Bringing innovation to the surface.™

DEVGUARD® 4306

Galvanized and aluminum

- Degrease to SSPC SP-1 and remove any white corrosion products by hand abrasion
- Galvanizing must have at least 12 months exterior weathering
- Prime galvanized steel with DEVGUARD 4360 and aluminum with DEVGUARD 4141 or DEVGUARD 4360

Previously painted surfaces

- Wash to remove contaminants
- Rinse thoroughly with water and allow to dry
- Sanidng is not required if the surface is properly and thoroughly cleaned (scuff sanding is required only on glossy, hard, slick, or dense surfaces which are subject to high levels of moisture)
- Remove loose paint
- Scrub heavily chalked exterior areas and overhead areas such as eaves with soap and water
- All existing mildew must be removed by washing with a solution of 16 oz (473 mil) liquid household bleach and 2 oz (59 ml) non-ammoniated liquid detergent per gallon (3.785 L) of water. Rinse surfaces clean with water and allow to dry for 24 hours
- Prime with DEVGUARD 4141 or DEVGUARD 4360

Substrate temperature and application conditions

- Surface temperature during application should be between 40°F (4°C) and 120°F (49°C)
- Surface temperature during application should be at least 5°F (3°C) above dew point
- Ambient temperature during application and curing should be between 50°F (10°C) and 100°F (38°C)
- Relative humidity during application should be above 0% and below 85%

Warning

Removal of old paint by sanding, scraping or other means may generate dust or fumes which contain lead. EXPOSURE TO LEAD DUST OR FUMES MAY CAUSE ADVERSE HEALTH EFFECTS, ESPECIALLY IN CHILDREN OR PREGNANT WOMEN. Controlling exposure to lead or other hazardous substances requires the use of proper protective equipment, such as a properly fitted and approved (e.g., NIOSHapproved) respirator and proper containment and cleanup. For additional information, contact the USEPA/Lead Information Hotline at 1-800-424-LEAD or the regional Health Canada office

SYSTEM SPECIFICATION

- Primers: Direct to metal or DEVGUARD 4141, DEVGUARD 4360

INSTRUCTIONS FOR USE

- Inspect the top surface and remove any “skins” that may have formed on top
- Agitate with a power mixer for 1 – 2 minutes until completely dispersed. Ensure good off-bottom mixing

DEVGUARD® 4306

Application

- Area should be sheltered from airborne particulates and pollutants
- Ensure good ventilation during application and curing
- Provide shelter to prevent wind from affecting spray patterns

Material temperature

Material temperature during application should be between 50°F (10°C) and 90°F (32°C)

Air spray

- Separate air and fluid pressure regulators and a moisture and oil trap in the main air supply line are recommended.

Recommended thinner

No thinner should be added

Nozzle orifice

Approx. 0.070 in (1.8 mm)

Airless spray

- 30:1 pump or larger
- Adjust pump pressure as needed

Recommended thinner

No thinner should be added

Nozzle orifice

0.013 – 0.015 in (approx. 0.33 – 0.38 mm)

Brush/roller

- Use a high quality natural bristle brush and/or solvent resistant, 3/8" nap roller. Ensure brush/roller is well loaded to avoid air entrainment. Multiple coats may be necessary to achieve adequate film-build

Recommended thinner

No thinner should be added

Cleaning solvent

Paint thinner (lacquer thinner or mineral spirits)

DEVGUARD® 4306

ADDITIONAL DATA

Overcoating interval for DFT up to 2.0 mils (51 µm)		
Overcoating with...	**Interval**	**77°F (25°C)**
itself	Minimum	16 hours
	Maximum	Extended

Notes:
- Overcoating times valid for a relative humidity of 50%
- Drying times may vary depending on temperature, humidity, and air movement

Curing time for DFT up to 2.0 mils (51 µm)		
Substrate temperature	**Dry to touch**	**Dry hard**
77°F (25°C)	2 hours	8 hours

Note: Curing times valid for a relative humidity of 50%

DISCLAIMER

- For professional use only. Not for household use. Do not use under alkyd or oil-based paints

SAFETY PRECAUTIONS

- For paint and recommended thinners see INFORMATION SHEETS 1430, 1431 and relevant Material Safety Data Sheets

Danger

Rags, steel wool or waste soaked with this product may spontaneously catch fire if improperly discarded. Immediately after use, place rags, steel wool or waste in a sealed water-filled metal container. Refer to www.pittsburghpaints.com, Spontaneous Combustion Advisory for additional information

WORLDWIDE AVAILABILITY

It is always the aim of PPG Protective and Marine Coatings to supply the same product on a worldwide basis. However, slight modification of the product is sometimes necessary to comply with local or national rules/circumstances. Under these circumstances an alternative product data sheet is used.

REFERENCES

• CONVERSION TABLES	INFORMATION SHEET	1410
• EXPLANATION TO PRODUCT DATA SHEETS	INFORMATION SHEET	1411
• SAFETY INDICATIONS	INFORMATION SHEET	1430
• SAFETY IN CONFINED SPACES AND HEALTH SAFETY, EXPLOSION HAZARD – TOXIC HAZARD	INFORMATION SHEET	1431

PPG Protective & Marine Coatings
Bringing innovation to the surface.™

DEVGUARD® 4306

WARRANTY

PPG warrants (i) its title to the product, (ii) that the quality of the product conforms to PPG's specifications for such product in effect at the time of manufacture and (iii) that the product shall be delivered free of the rightful claim of any third person for infringement of any U.S. patent covering the product. THESE ARE THE ONLY WARRANTIES THAT PPG MAKES AND ALL OTHER EXPRESS OR IMPLIED WARRANTIES, UNDER STATUTE OR ARISING OTHERWISE IN LAW, FROM A COURSE OF DEALING OR USAGE OF TRADE, INCLUDING WITHOUT LIMITATION, ANY OTHER WARRANTY OF FITNESS FOR A PARTICULAR PURPOSE OR USE, ARE DISCLAIMED BY PPG. Any claim under this warranty must be made by Buyer to PPG in writing within five (5) days of Buyer's discovery of the claimed defect, but in no event later than the expiration of the applicable shelf life of the product, or one year from the date of the delivery of the product to the Buyer, whichever is earlier. Buyer's failure to notify PPG of such non-conformance as required herein shall bar Buyer from recovery under this warranty.

LIMITATIONS OF LIABILITY

IN NO EVENT WILL PPG BE LIABLE UNDER ANY THEORY OF RECOVERY (WHETHER BASED ON NEGLIGENCE OF ANY KIND, STRICT LIABILITY OR TORT) FOR ANY INDIRECT, SPECIAL, INCIDENTAL, OR CONSEQUENTIAL DAMAGES IN ANY WAY RELATED TO, ARISING FROM, OR RESULTING FROM ANY USE MADE OF THE PRODUCT. The information in this sheet is intended for guidance only and is based upon laboratory tests that PPG believes to be reliable. PPG may modify the information contained herein at any time as a result of practical experience and continuous product development. All recommendations or suggestions relating to the use of the PPG product, whether in technical documentation, or in response to a specific inquiry, or otherwise, are based on data, which to the best of PPG's knowledge, is reliable. The product and related information is designed for users having the requisite knowledge and industrial skills in the industry and it is the end-user's responsibility to determine the suitability of the product for its own particular use and it shall be deemed that Buyer has done so, as its sole discretion and risk. PPG has no control over either the quality or condition of the substrate, or the many factors affecting the use and application of the product. Therefore, PPG does not accept any liability arising from any loss, injury or damage resulting from such use or the contents of this information (unless there are written agreements stating otherwise). Variations in the application environment, changes in procedures of use, or extrapolation of data may cause unsatisfactory results. This sheet supersedes all previous versions and it is the Buyer's responsibility to ensure that this information is current prior to using the product. Current sheets for all PPG Protective & Marine Coatings Products are maintained at www.ppgpmc.com. The English text of this sheet shall prevail over any translation thereof.

AVAILABILITY

Packaging

1-gallon and 5-gallon kits

The PPG Logo, Bringing innovation to the surface., and all other trademarks herein are property of the PPG group of companies.

PPG Protective & Marine Coatings
Bringing innovation to the surface.™

MATERIAL SAFETY DATA SHEET

prepared 01/19/11

Akzo Nobel Paints 15885 Sprague Road Strongsville, Ohio 44136 EMERGENCY TELEPHONE NO. (800) 545-2643

GLIDDEN PROFESSIONAL GRIPPER PRIMER SEALER

GP3210

HAZARDS IDENTIFICATION (ANSI Section 3)

Primary route(s) of exposure : Inhalation, skin contact, eye contact, ingestion.

Effects of overexposure :

Inhalation : Irritation of respiratory tract. Prolonged inhalation may lead to mucous membrane irritation, dizziness and/or lightheadedness, headache, nausea, coughing, central nervous system depression, difficulty of breathing, severe lung irritation or damage.

Skin contact : Irritation of skin.

Eye contact : Irritation of eyes. Prolonged or repeated contact can cause conjunctivitis, tearing of eyes, redness of eyes.

Ingestion : Ingestion may cause mouth and throat irritation, fatigue, dizziness and/or lightheadedness, headache, nausea, diarrhea, gastro-intestinal disturbances, abdominal pain, intoxication.

Medical conditions aggravated by exposure : Eye, skin, respiratory disorders, asthma-like conditions.

FIRST-AID MEASURES (ANSI Section 4)

Inhalation : Remove to fresh air. Restore and support continued breathing. Get emergency medical attention. Have trained person give oxygen if necessary. Get medical help for any breathing difficulty. Remove to fresh air if inhalation causes eye watering, headaches, dizziness, or other discomfort.

Skin contact : Wash thoroughly with soap and water. If any product remains, gently rub petroleum jelly, vegetable or mineral/baby oil onto skin. Repeated applications may be needed. Remove contaminated clothing. Wash contaminated clothing before re-use. If irritation occurs, consult a physician.

Eye contact : Flush immediately with large amounts of water, especially under lids for at least 15 minutes. If irritation or other effects persist, obtain medical treatment.

Ingestion : If swallowed, obtain medical treatment immediately.

FIRE-FIGHTING MEASURES (ANSI Section 5)

Fire extinguishing media : Dry chemical or foam water fog. Carbon dioxide. Closed containers may burst if exposed to extreme heat or fire. In closed tanks, water or foam may cause frothing or eruption.

Fire fighting procedures : Water may be used to cool and protect exposed containers. Firefighters should use full protective clothing, eye protection, and self-contained breathing apparatus.

Hazardous decomposition or combustion products : Carbon monoxide, carbon dioxide. Oxides of calcium.

ACCIDENTAL RELEASE MEASURES (ANSI Section 6)

Steps to be taken in case material is released or spilled : Comply with all applicable health and environmental regulations. Eliminate all sources of ignition. Ventilate area. Spills may be collected with absorbent materials. Evacuate all unnecessary personnel. Place collected material in proper container. Complete personal protective equipment must be used during cleanup. Large spills - shut off leak if safe to do so. Dike and contain spill. Pump to storage or salvage vessels. Use absorbent to pick up excess residue. Keep salvageable material and rinse water out of sewers and water courses. Small spills - use absorbent to pick up residue and dispose of properly.

HANDLING AND STORAGE (ANSI Section 7)

Handling and storage : Store below 100f (38c). Keep from freezing. Keep container tightly closed in a well-ventilated area.

Other precautions : Use only with adequate ventilation. Do not take internally. Keep out of reach of children. Avoid contact with skin and eyes, and breathing of vapors. Wash hands thoroughly after handling, especially before eating or smoking. Keep containers tightly closed and upright when not in use. Avoid conditions which result in formation of inhalable particles such as spraying or abrading (sanding) painted surfaces. If such conditions cannot be avoided, use appropriate respiratory protection as directed under exposure controls/personal protection. Empty containers may contain hazardous residues.

EXPOSURE CONTROLS/PERSONAL PROTECTION (ANSI Section 8)

Respiratory protection : Control environmental concentrations below applicable exposure standards when using this material. When respiratory protection is determined to be necessary, use a NIOSH/MSHA (Canadian z94.4) Approved elastomeric sealing- surface facepiece respirator outfitted with organic vapor cartridges and paint spray (dust/mist) prefilters. Determine the proper level of protection by conducting appropriate air monitoring. Consult 29CFR1910.134 For selection of respirators (Canadian z94.4).

Ventilation : Provide dilution ventilation or local exhaust to prevent build-up of vapors.

Personal protective equipment : Eye wash, safety shower, safety glasses or goggles. Impervious gloves, impervious clothing.

STABILITY AND REACTIVITY (ANSI Section 10)

Under normal conditions : Stable see section 5 fire fighting measures

Materials to avoid : Oxidizers, acids, ammonium salts.

Conditions to avoid : Elevated temperatures, contact with oxidizing agent, freezing, sparks, open flame.

Hazardous polymerization : Will not occur

TOXICOLOGICAL INFORMATION (ANSI Section 11)

Supplemental health information : Contains a chemical that may be absorbed through skin. Notice - reports have associated repeated and prolonged occupational overexposure to solvents with permanent brain and nervous system damage. Intentional misuse by deliberately concentrating and inhaling the contents may be harmful or fatal. Other effects of overexposure may include toxicity to liver, kidney, blood.

Carcinogenicity : Contains crystalline silica which is considered a hazard by inhalation. IARC has classified crystalline silica as carcinogenic to humans (group 1). Crystalline silica is also a known cause of silicosis, a noncancerous lung disease. The national toxicology program (NTP) has classified crystalline silica as a known human carcinogen. In a lifetime inhalation study, exposure to 250 mg/m3 titanium dioxide resulted in the development of lung tumors in rats. These tumors occurred only at dust levels that overwhelmed the animals' lung clearance mechanisms and were different from common human lung tumors in both type and location. The relevance of these findings to humans is unknown but questionable. The international agency for research on cancer (IARC) has classified titanium dioxide as possibly carcinogenic to humans (group 2b) based on inadequate evidence of carcinogenicity in humans and sufficient evidence of carcinogenicity in experimental animals.

Reproductive effects : No reproductive effects are anticipated

Mutagenicity : No mutagenic effects are anticipated

Teratogenicity : No teratogenic effects are anticipated

ECOLOGICAL INFORMATION (ANSI Section 12)

No ecological testing has been done by akzo nobel paints llc on this product as a whole.

The information contained herein is based on data available at the time of preparation of this data sheet which Akzo Nobel Paints believes to be reliable. However, no warranty is expressed or implied regarding the accuracy of this data. Akzo Nobel Paints shall not be responsible for the use of this information, or of any product, method or apparatus mentioned and you must make your own determination of its suitability and completeness for your own use, for the protection of the environment, and the health and safety of your employees and the users of this material.
Complies with OSHA hazard communication standard 29CFR1910.1200.

DISPOSAL CONSIDERATIONS (ANSI Section 13)

Waste disposal : Dispose in accordance with all applicable regulations. Avoid discharge to natural waters.

REGULATORY INFORMATION (ANSI Section 15)

As of the date of this MSDS, all of the components in this product are listed (or are otherwise exempt from listing) on the TSCA inventory. This product has been classified in accordance with the hazard criteria of the CPR (controlled products regulations) and the MSDS contains all the information required by the CPR.

Physical Data (ANSI Sections 1, 9, and 14)

Product Code	Description	Wt. / Gal.	VOC gr. / ltr.	% Volatile by Volume	Flash Point	Boiling Range	HMIS	DOT, proper shipping name
3210-1200	gripper primer white	11.18	81.68	53.83	none	212-501	*310	paint**protect from freezing**
3210-1300	gripper primer grey	10.57	90.33	54.89	none	212-453	*210	paint**protect from freezing**

Ingredients Product Codes with % by Weight (ANSI Section 2)

Chemical Name	Common Name	CAS. No.	3210-1200	3210-1300
1,2-ethanediol	ethylene glycol	107-21-1		.1-1.0
ethanol, 2-(2-butoxyethoxy)-	diethylene glycol monobutyl ether	112-34-5		1-5
limestone	limestone	1317-65-3	10-20	5-10
titanium oxide	titanium dioxide	13463-67-7	10-20	1-5
quartz	quartz	14808-60-7	.1-1.0	10-20
2-propenoic acid, butyl ester, polymer with ethenyl acetate	vinyl acrylic latex	25067-01-0	10-20	
propanoic acid, 2-methyl-, monoester with 2,2,4-trimethyl-1,3-pentanediol	texanol	25265-77-4	1-5	
2-propenoic acid, 2-methyl-, methyl ester, polymer with ethenylbenzene and 2-ethylhexyl 2-propenoate	styrene copolymer	25750-06-5		1-5
nepheline syenite	feldspar-type minerals	37244-96-5	10-20	
water	water	7732-18-5	30-40	30-40
oxirane, methyl-, polymer with oxirane	surfactant	9003-11-6		1-5
styrene acrylic copolymer	styrene acrylic copolymer	Sup. Conf.	10-20	20-30

Chemical Hazard Data (ANSI Sections 2, 8, 11, and 15)

		ACGIH-TLV				OSHA-PEL				S.R. Std.	S2	S3	CC	H	M	N	I	O
Common Name	CAS. No.	8-Hour TWA	STEL	C	S	8-Hour TWA	STEL	C	S									
diethylene glycol monobutyl ether	112-34-5	not est.	not est.	not est.	not est.	not est.	not est.	not est.	not est.	not est.	n	y	n	y	n	n	n	n
limestone	1317-65-3	10 mg/m3	not est.	not est.	not est.	5 mg/m3	not est.	not est.	not est.	not est.	n	n	n	n	n	n	n	n
titanium dioxide	13463-67-7	10 mg/m3	not est.	not est.	not est.	10 mg/m3	not est.	not est.	not est.	not est.	n	n	n	n	n	y	y	n
quartz	14808-60-7	.025 mg/m3	not est.	not est.	not est.	0.1 mg/m3	not est.	not est.	not est.	not est.	n	n	n	n	n	y	y	n
vinyl acrylic latex	25067-01-0	not est.	not est.	not est.	not est.	not est.	not est.	not est.	not est.	not est.	n	n	n	n	n	n	n	n
texanol	25265-77-4	not est.	not est.	not est.	not est.	not est.	not est.	not est.	not est.	not est.	n	n	n	n	n	n	n	n
feldspar-type minerals	37244-96-5	not est.	not est.	not est.	not est.	not est.	not est.	not est.	not est.	not est.	n	n	n	n	n	n	n	n
surfactant	9003-11-6	not est.	not est.	not est.	not est.	not est.	not est.	not est.	not est.	not est.	n	n	n	n	n	n	n	n

Footnotes:

C=Ceiling - Concentration that should not be exceeded, even instantaneously.

S=Skin - Additional exposure, over and above airborn exposure, may result from skin absorption.

n/a=not applicable
not est=not established
CC=CERCLA Chemical

ppm=parts per million
mg/m3=milligrams per cubic meter
Sup Conf=Supplier Confidential

S2=Sara Section 302 EHS
S3=Sara Section 313 Chemical
S.R.Std.=Supplier Recommended Standard

H=Hazardous Air Pollutant, M=Marine Pollutant
P=Pollutant, S=Severe Pollutant
Carcinogenicity Listed By:
N=NTP, I=IARC, O=OSHA, y=yes, n=no

PPG PITTSBURGH PAINTS®

MANOR HALL®R 82-500 Series

Architectural Coatings

MANOR HALL Interior Paint, Primer & Stain Repellent in One Semi-Gloss

GENERAL DESCRIPTION

Manor Hall Interior Paint, Primer & Stain Repellent in One is a super premium latex that was developed to resist household stains through the combination of resin and proprietary formulation. The 100% acrylic latex has outstanding adhesion and coverage and offers a burnish and mildew resistant coating, providing the durability for use in high humidity and high traffic areas. Outstanding hiding is aided by excellent flow and leveling which provides a rich, smooth film for a beautiful finish.

RECOMMENDED SUBSTRATES

Concrete/Masonry Block
Ferrous Metal
Gypsum Wallboard-Drywall
Plaster
Wood

CONFORMANCE STANDARDS

VOC compliant in all regulated areas
MPI® approval in category #54, Latex, Interior Semi-Gloss
MPI approval in category #141, Latex, Interior Semi-Gloss

APPLICATION INFORMATION

Stir thoroughly before using and occasionally during use. When using more than one container of the same color, intermix to ensure color uniformity. USE WITH ADEQUATE VENTILATION. KEEP OUT OF REACH OF CHILDREN. Read all label and Material Safety Data Sheet (MSDS) information prior to use. MSDS are available through our website or by calling 1-800-441-9695.

Application Equipment: Apply with a high quality brush, roller, or by paint pad, or by spray equipment. Where necessary, apply a second coat.

Airless Spray: Pressure 2000 psi, tip 0.015" - 0.021"
Spray equipment must be handled with due care and in accordance with manufacturer's recommendation. High-pressure injection of coatings into the skin by airless equipment may cause serious injury.

Brush: Polyester/Nylon Brush
Roller: 3/16" - 3/8" nap roller cover

Thinning: No thinning is usually required. If necessary, add up to 1/4 pint (118 mL) of water per gallon (3.78L) of paint.

Permissible temperatures during application:

Material:	50 to 90ºF	10 to 32ºC
Ambient:	50 to 90ºF	10 to 32ºC
Substrate:	50 to 90ºF	10 to 32ºC

TINTING AND BASE INFORMATION

Refer to the appropriate color formula book, automatic tinting equipment, and or computer color matching system for color formulas and tinting instructions.

82-500	Bright Base
82-510	Pastel Base
82-520	Midtone Base*
82-540	Ultra Deep Base*

*Must be tinted before use.

Some colors, drastic color changes or porous substrates may require additional coats to achieve a uniform finish.

PRODUCT DATA

PRODUCT TYPE: 100% Acrylic Latex
SHEEN*: Semi-Gloss: 40 to 60 (60º Gloss Meter)
VOLUME SOLIDS*: 37% +/- 2%
WEIGHT SOLIDS*: 51% +/- 2%
VOC*: < 50 g/L (0.4 lbs./gal.)

WEIGHT/GALLON*: 10.5 lbs. (4.8 kg) +/- 0.2 lbs. (91 g)
*Product data calculated on product 82-500.

COVERAGE: Approximately 400 sq. ft./gal. (37.2 sq. m/3.78L)

Wet Film Thickness:	4 mils
Wet Microns:	102
Dry Film Thickness:	1.5 mils
Dry Microns:	38

Coverage figures do not include loss due to surface irregularities and porosity or material loss due to application method or mixing.

DRYING TIME: Dry time @ 77ºF (25ºC); 50% relative humidity.

To Touch:	1 hour
To Recoat:	4 hours

Drying times listed may vary depending on temperature, humidity, film build, color, and air movement.

CLEANUP: Clean tools with warm soapy water.

WASHING INSTRUCTIONS: Wait at least 14 days after painting before cleaning the surface with a non-abrasive mild cleaner.

DISPOSAL: Contact your local environmental regulatory agency for guidance on disposal of unused product. Do not pour down a drain or storm sewer.

FLASH POINT: Over 200ºF (93ºC)

FEATURES / BENEFITS

Features	Benefits
Paint, Primer & Stain Repellent in One	A primer coat is usually not necessary; the combination of resin/formulation resists household stains
< 50 g/L VOC	Can be used in all regulated areas
Excellent flow and leveling	Provides smooth film and promotes better hiding and coverage
Excellent burnish resistance	Surface can be wiped or brushed against without impacting the sheen of the film
Outstanding scrub ability	Offers excellent durability and enables repeated cleaning
Lifetime Limited Warranty	Satisfaction guaranteed

Read Label and Material Safety Data Sheet Prior to Use. See other cautions on last page.

GENERAL SURFACE PREPARATION

Surfaces to be coated must be dry, clean, sound, and free from all contamination including loose and peeling paint, dirt, grease, oil, wax, concrete curing agents and bond breakers, chalk, efflorescence, mildew, rust, product fines, and dust. Remove loose paint, chalk, and efflorescence by wire brushing, scraping, sanding, and/or pressure washing. Putty all nail holes and caulk all cracks and open seams. Sand all glossy, rough, and patched surfaces. Feather back all rough edges to sound surface by sanding.

When applied to an uncoated substrate, two coats are required, with the first acting as the primer. For stains, water marks, and challenging conditions use a premium problem solving primer.

WARNING! If you scrape, sand, or remove old paint, you may release lead dust or fumes. LEAD IS TOXIC. EXPOSURE TO LEAD DUST OR FUMES CAN CAUSE SERIOUS ILLNESS, SUCH AS BRAIN DAMAGE, ESPECIALLY IN CHILDREN. PREGNANT WOMEN SHOULD ALSO AVOID EXPOSURE. Wear a properly fitted NIOSH-approved respirator and prevent skin contact to control lead exposure. Clean up carefully with a HEPA vacuum and a wet mop. Before you start, find out how to protect yourself and your family by contacting the USEPA National Lead Information Hotline at 1-800-424-LEAD or log on to www.epa.gov/lead. In Canada contact a regional Health Canada office. Follow these instructions to control exposure to other hazardous substances that may be released during surface preparation.

CONCRETE/MASONRY BLOCK: Mortar should cure for at least 30 days and preferably 90 days prior to painting. Fill block with an appropriate block filler. Surfaces previously coated with water thinned cement-based paint must be prepared with extra care. If the material appears to be adhering tightly, a masonry sealer may be applied to seal the surface. Check adhesion by applying a piece of masking tape. If the sealer peels off and has loose particles, remove all chalking or crumbling material, re-seal and re-check adhesion.

FERROUS METAL: The surface must be cleaned thoroughly to remove any dust, rust, and surface contaminants, prior to painting.

GYPSUM WALLBOARD-DRYWALL: Nails or screws should be countersunk, and they along with any indentations should be mudded flush with the surface, sanded smooth and cleaned to remove any dust, then prime prior to painting the substrate.

PLASTER: Plaster, hardcoat, skim coat, or other alkaline surfaces should be allowed to cure for at least 30 days prior to painting.

WOOD: Unpainted wood or wood in poor condition should be sanded smooth and wiped clean. Any knots or resinous areas must be sealed before painting. Countersink all nails, putty flush with surface.

SOLUBLE STAINS: Apply a SEAL GRIP® primer over the stained area prior to coating, to avoid bleeding the stain into the topcoat.

RECOMMENDED PRIMERS

Concrete/Masonry Block (block fillers)	6-7, 6-15
Concrete/Masonry Block (primers, sealers)	4-603, 17-921, self-priming
Ferrous Metal	90-712, 90-912
Gypsum Wallboard-Drywall	6-2, 6-4, 6-4900, 9-900, 12-900, self-priming
Plaster	4-603, 17-921, self-priming
Wood	6-2, 6-4900, 9-900, 12-900, 17-921, self-priming

LIMITATIONS OF USE

FOR INTERIOR USE ONLY. Apply when air, surface and product temperatures are between 50ºF 10ºC and 90ºF (32ºC). Not recommended for use on floors.

PROTECT FROM FREEZING.

PACKAGING

1-Gallon (3.78 L)
5-Gallon (18.9 L)
Quart (946 mL)
Not all products are available in all sizes.

RECOMMENDED PRIMERS

WARNING! HARMFUL IF SWALLOWED. MAY BE HARMFUL IF INHALED. MAY CAUSE RESPIRATORY TRACT AND EYE IRRITATION. Sanding and grinding dusts may be harmful if inhaled. Contains material that may cause target organ damage, based on animal data. Do not swallow. Wash thoroughly after handling. Avoid breathing vapor or mist. Avoid contact with eyes, skin and clothing. Wash thoroughly after handling. Keep container tightly closed and sealed until ready for use. Provide fresh air ventilation during and after application and drying. Avoid the inhalation of dust, particulates, spray or mist arising from the application of this preparation. Use personal protective equipment as required. Note: These warnings encompass the product series. Prior to use, read and follow product-specific MSDS and label information. FIRST AID: If swallowed, rinse mouth with water (only if the person is conscious). Do not induce vomiting unless directed to do so by medical personnel. If in eyes, rinse with water for 15 minutes. Check for and remove any contact lenses. If on skin, rinse well with water. Wash with soap and water. Get medical attention if irritation develops. If inhaled, remove to fresh air. If experiencing respiratory symptoms call a POISON CENTER or doctor/physician. Keep out of the reach of children. For workplace use, an MSDS is available from your retailer or by calling (412) 492-5555. EMERGENCY SPILL INFORMATION: (412) 434-4515 (U.S.).

The PPG logo is a registered trademark of PPG Industries Ohio, Inc. *PPG PITTSBRUGH PAINTS, MANOR HALL* and *SEAL GRIP* are registered trademarks of PPG Architectural Finishes, Inc. *MPI* is a registered trademark of The Masters Painters Institute.

PPG Architectural Finishes, Inc. believes the technical data presented is currently accurate: however, no guarantee of accuracy, comprehensiveness, or performance is given or implied. Improvements in coatings technology may cause future technical data to vary from what is in this bulletin. For complete, up-to-date technical information, visit our web site or call 1-800-441-9695.

PPG Industries, Inc.
Architectural Coatings
One PPG Place
Pittsburgh, PA 15272
www.ppgpittsburghpaints.com

Technical Services
1-800-441-9695
1-888-807-5123 fax

Architect/Specifier
1-888-PPG-IDEA

PPG Architectural Coatings Canada Inc.
2505, rue de la Metropole
Longueuil (Quebec) Canada J4G 1E5

A3.83 6/2015
(Supersedes 5/2015

Made in the USA

SAFETY DATA SHEET

Date of issue/Date of revision 24 August 2015
Version 4.01

Section 1. Identification

Product name : MH/ST SEMI-GLOSS BRIGHT BASE
Product code : 82-500
Other means of identification : Not available.
Product type : Liquid.

Relevant identified uses of the substance or mixture and uses advised against

Product use : Industrial applications.
Use of the substance/ mixture : Coating. Paints. Painting-related materials.
Uses advised against : Not applicable.

Supplier : PPG Industries, Inc.
One PPG Place
Pittsburgh, PA 15272
Emergency telephone number : (412) 434-4515 (U.S.)
(514) 645-1320 (Canada)
01-800-00-21-400 (Mexico)
Technical Phone Number : 1-800-441-9695 (8:00 am to 5:00 pm EST)

Section 2. Hazards identification

OSHA/HCS status : This material is considered hazardous by the OSHA Hazard Communication Standard (29 CFR 1910.1200).
Classification of the substance or mixture : CARCINOGENICITY - Category 2

Percentage of the mixture consisting of ingredient(s) of unknown toxicity: 22.8%

GHS label elements
Hazard pictograms :

Signal word : Warning
Hazard statements : Suspected of causing cancer.
Precautionary statements

Section 2. Hazards identification

Prevention : Obtain special instructions before use. Do not handle until all safety precautions have been read and understood. Wear protective gloves. Wear eye or face protection. Wear protective clothing.

Response : IF exposed or concerned: Get medical attention.

Storage : Store locked up.

Disposal : Dispose of contents and container in accordance with all local, regional, national and international regulations.

Supplemental label elements : Sanding and grinding dusts may be harmful if inhaled. Emits toxic fumes when heated.

Hazards not otherwise classified : None known.

Section 3. Composition/information on ingredients

Substance/mixture : Mixture

Product name : MH/ST SEMI-GLOSS BRIGHT BASE

Ingredient name	%	CAS number
titanium dioxide	≥10 - <25	13463-67-7

SUB codes represent substances without registered CAS Numbers.

Any concentration shown as a range is to protect confidentiality or is due to batch variation.

There are no additional ingredients present which, within the current knowledge of the supplier and in the concentrations applicable, are classified as hazardous to health or the environment and hence require reporting in this section.

Occupational exposure limits, if available, are listed in Section 8.

Section 4. First aid measures

If ingestion, irritation, any type of overexposure or symptoms of overexposure occur during or persists after use of this product, contact a POISON CONTROL CENTER, EMERGENCY ROOM OR PHYSICIAN immediately; have Safety Data Sheet information available. Never give anything by mouth to an unconscious or convulsing person.

Description of necessary first aid measures

Eye contact : Remove contact lenses, irrigate copiously with clean, fresh water, holding the eyelids apart for at least 10 minutes and seek immediate medical advice.

Inhalation : Remove to fresh air. Keep person warm and at rest. If not breathing, if breathing is irregular or if respiratory arrest occurs, provide artificial respiration or oxygen by trained personnel.

Skin contact : Remove contaminated clothing and shoes. Wash skin thoroughly with soap and water or use recognized skin cleanser. Do NOT use solvents or thinners.

Ingestion : If swallowed, seek medical advice immediately and show this container or label. Keep person warm and at rest. Do NOT induce vomiting.

Most important symptoms/effects, acute and delayed

Potential acute health effects

Eye contact : No known significant effects or critical hazards.

Section 4. First aid measures

Inhalation : No known significant effects or critical hazards.

Skin contact : No known significant effects or critical hazards.

Ingestion : No known significant effects or critical hazards.

Over-exposure signs/symptoms

Eye contact : No specific data.

Inhalation : No specific data.

Skin contact : No specific data.

Ingestion : No specific data.

Indication of immediate medical attention and special treatment needed, if necessary

Notes to physician : Treat symptomatically. Contact poison treatment specialist immediately if large quantities have been ingested or inhaled.

Specific treatments : No specific treatment.

Protection of first-aiders : No action shall be taken involving any personal risk or without suitable training. It may be dangerous to the person providing aid to give mouth-to-mouth resuscitation.

See toxicological information (Section 11)

Section 5. Fire-fighting measures

Extinguishing media

Suitable extinguishing media : Use an extinguishing agent suitable for the surrounding fire.

Unsuitable extinguishing media : None known.

Specific hazards arising from the chemical : In a fire or if heated, a pressure increase will occur and the container may burst. This material is toxic to aquatic life. Fire water contaminated with this material must be contained and prevented from being discharged to any waterway, sewer or drain.

Hazardous thermal decomposition products : Decomposition products may include the following materials:
carbon dioxide
carbon monoxide
metal oxide/oxides

Special protective actions for fire-fighters : Promptly isolate the scene by removing all persons from the vicinity of the incident if there is a fire. No action shall be taken involving any personal risk or without suitable training.

Special protective equipment for fire-fighters : Fire-fighters should wear appropriate protective equipment and self-contained breathing apparatus (SCBA) with a full face-piece operated in positive pressure mode.

Section 6. Accidental release measures

Personal precautions, protective equipment and emergency procedures

For non-emergency personnel : No action shall be taken involving any personal risk or without suitable training. Evacuate surrounding areas. Keep unnecessary and unprotected personnel from entering. Do not touch or walk through spilled material. Avoid breathing vapor or mist. Provide adequate ventilation. Wear appropriate respirator when ventilation is inadequate. Put on appropriate personal protective equipment.

For emergency responders : If specialised clothing is required to deal with the spillage, take note of any information in Section 8 on suitable and unsuitable materials. See also the information in "For non-emergency personnel".

Environmental precautions : Avoid dispersal of spilled material and runoff and contact with soil, waterways, drains and sewers. Inform the relevant authorities if the product has caused environmental pollution (sewers, waterways, soil or air).

Methods and materials for containment and cleaning up

Small spill : Stop leak if without risk. Move containers from spill area. Dilute with water and mop up if water-soluble. Alternatively, or if water-insoluble, absorb with an inert dry material and place in an appropriate waste disposal container. Dispose of via a licensed waste disposal contractor.

Large spill : Stop leak if without risk. Move containers from spill area. Approach release from upwind. Prevent entry into sewers, water courses, basements or confined areas. Wash spillages into an effluent treatment plant or proceed as follows. Contain and collect spillage with non-combustible, absorbent material e.g. sand, earth, vermiculite or diatomaceous earth and place in container for disposal according to local regulations (see Section 13). Dispose of via a licensed waste disposal contractor. Contaminated absorbent material may pose the same hazard as the spilled product. Note: see Section 1 for emergency contact information and Section 13 for waste disposal.

Section 7. Handling and storage

Precautions for safe handling

Protective measures : Put on appropriate personal protective equipment (see Section 8). Avoid exposure - obtain special instructions before use. Do not handle until all safety precautions have been read and understood. Do not get in eyes or on skin or clothing. Do not ingest. Avoid breathing vapor or mist. If during normal use the material presents a respiratory hazard, use only with adequate ventilation or wear appropriate respirator. Keep in the original container or an approved alternative made from a compatible material, kept tightly closed when not in use. Empty containers retain product residue and can be hazardous. Do not reuse container.

Special precautions : If this material is part of a multiple component system, read the Safety Data Sheet(s) for the other component or components before blending as the resulting mixture may have the hazards of all of its parts.

Advice on general occupational hygiene : Eating, drinking and smoking should be prohibited in areas where this material is handled, stored and processed. Workers should wash hands and face before eating, drinking and smoking. Remove contaminated clothing and protective equipment before entering eating areas. See also Section 8 for additional information on hygiene measures.

Section 7. Handling and storage

Conditions for safe storage, including any incompatibilities : Do not store below the following temperature: 5°C (41°F). Store in accordance with local regulations. Store in original container protected from direct sunlight in a dry, cool and well-ventilated area, away from incompatible materials (see Section 10) and food and drink. Keep container tightly closed and sealed until ready for use. Containers that have been opened must be carefully resealed and kept upright to prevent leakage. Do not store in unlabeled containers. Use appropriate containment to avoid environmental contamination.

Section 8. Exposure controls/personal protection

Control parameters

Occupational exposure limits

Ingredient name	Exposure limits
titanium dioxide	**OSHA PEL (United States, 2/2013).** TWA: 15 mg/m³ 8 hours. Form: Total dust **ACGIH TLV (United States, 4/2014).** TWA: 10 mg/m³ 8 hours.

Key to abbreviations

A	=	Acceptable Maximum Peak	S	=	Potential skin absorption
ACGIH	=	American Conference of Governmental Industrial Hygienists.	SR	=	Respiratory sensitization
C	=	Ceiling Limit	SS	=	Skin sensitization
F	=	Fume	STEL	=	Short term Exposure limit values
IPEL	=	Internal Permissible Exposure Limit	TD	=	Total dust
OSHA	=	Occupational Safety and Health Administration.	TLV	=	Threshold Limit Value
R	=	Respirable	TWA	=	Time Weighted Average
Z	=	OSHA 29CFR 1910.1200 Subpart Z - Toxic and Hazardous Substances			

Consult local authorities for acceptable exposure limits.

Recommended monitoring procedures : If this product contains ingredients with exposure limits, personal, workplace atmosphere or biological monitoring may be required to determine the effectiveness of the ventilation or other control measures and/or the necessity to use respiratory protective equipment. Reference should be made to appropriate monitoring standards. Reference to national guidance documents for methods for the determination of hazardous substances will also be required.

Appropriate engineering controls : If user operations generate dust, fumes, gas, vapor or mist, use process enclosures, local exhaust ventilation or other engineering controls to keep worker exposure to airborne contaminants below any recommended or statutory limits.

Environmental exposure controls : Emissions from ventilation or work process equipment should be checked to ensure they comply with the requirements of environmental protection legislation. In some cases, fume scrubbers, filters or engineering modifications to the process equipment will be necessary to reduce emissions to acceptable levels.

Individual protection measures

Hygiene measures : Wash hands, forearms and face thoroughly after handling chemical products, before eating, smoking and using the lavatory and at the end of the working period. Appropriate techniques should be used to remove potentially contaminated clothing. Wash contaminated clothing before reusing. Ensure that eyewash stations and safety showers are close to the workstation location.

Eye/face protection : Safety glasses with side shields.

Section 8. Exposure controls/personal protection

Skin protection

Hand protection : Chemical-resistant, impervious gloves complying with an approved standard should be worn at all times when handling chemical products if a risk assessment indicates this is necessary. Considering the parameters specified by the glove manufacturer, check during use that the gloves are still retaining their protective properties. It should be noted that the time to breakthrough for any glove material may be different for different glove manufacturers. In the case of mixtures, consisting of several substances, the protection time of the gloves cannot be accurately estimated.

Body protection : Personal protective equipment for the body should be selected based on the task being performed and the risks involved and should be approved by a specialist before handling this product.

Other skin protection : Appropriate footwear and any additional skin protection measures should be selected based on the task being performed and the risks involved and should be approved by a specialist before handling this product.

Respiratory protection : Respirator selection must be based on known or anticipated exposure levels, the hazards of the product and the safe working limits of the selected respirator. If workers are exposed to concentrations above the exposure limit, they must use appropriate, certified respirators. Use a properly fitted, air-purifying or air-fed respirator complying with an approved standard if a risk assessment indicates this is necessary.

Section 9. Physical and chemical properties

Appearance

Physical state : Liquid.

Color : Not available.

Odor : Not available.

Odor threshold : Not available.

pH : Not available.

Melting point : Not available.

Boiling point : >37.78°C (>100°F)

Flash point : Closed cup: >93.33°C (>200°F)

Material supports combustion. : Yes.

Auto-ignition temperature : Not available.

Decomposition temperature : Not available.

Flammability (solid, gas) : Not available.

Lower and upper explosive (flammable) limits : Not available.

Evaporation rate : 0.34 (butyl acetate = 1)

Vapor pressure : 2.3 kPa (17.4 mm Hg) [room temperature]

Vapor density : Not available.

Relative density : 1.28

Density (lbs / gal) : 10.68

Solubility : Insoluble in the following materials: cold water.

Partition coefficient: n-octanol/water : Not available.

Section 9. Physical and chemical properties

Viscosity : Kinematic (40°C (104°F)): >0.21 cm^2/s (>21 cSt)

Volatility : 63% (v/v), 48.77% (w/w)

% Solid. (w/w) : 51.23

Section 10. Stability and reactivity

Reactivity : No specific test data related to reactivity available for this product or its ingredients.

Chemical stability : The product is stable.

Possibility of hazardous reactions : Under normal conditions of storage and use, hazardous reactions will not occur.

Conditions to avoid : When exposed to high temperatures may produce hazardous decomposition products. Refer to protective measures listed in sections 7 and 8.

Incompatible materials : Keep away from the following materials to prevent strong exothermic reactions: oxidizing agents, strong alkalis, strong acids.

Hazardous decomposition products : Decomposition products may include the following materials: carbon monoxide, carbon dioxide, smoke, oxides of nitrogen.

Section 11. Toxicological information

Information on toxicological effects

Acute toxicity

Product/ingredient name	Result	Species	Dose	Exposure
titanium dioxide	LD50 Oral	Rat	>10 g/kg	-

Conclusion/Summary : There are no data available on the mixture itself.

Irritation/Corrosion

Conclusion/Summary

Skin : There are no data available on the mixture itself.

Eyes : There are no data available on the mixture itself.

Respiratory : There are no data available on the mixture itself.

Sensitization

Conclusion/Summary

Skin : There are no data available on the mixture itself.

Respiratory : There are no data available on the mixture itself.

Mutagenicity

Conclusion/Summary : There are no data available on the mixture itself.

Carcinogenicity

Conclusion/Summary : There are no data available on the mixture itself.

Classification

Section 11. Toxicological information

Product/ingredient name	OSHA	IARC	NTP
titanium dioxide	-	2B	-

Carcinogen Classification code:

IARC: 1, 2A, 2B, 3, 4
NTP: Known to be a human carcinogen; Reasonably anticipated to be a human carcinogen
OSHA: +
Not listed/not regulated: -

Reproductive toxicity

Conclusion/Summary : There are no data available on the mixture itself.

Teratogenicity

Conclusion/Summary : There are no data available on the mixture itself.

Specific target organ toxicity (single exposure)

Not available.

Specific target organ toxicity (repeated exposure)

Not available.

Target organs : Contains material which may cause damage to the following organs: upper respiratory tract.

Aspiration hazard

Not available.

Information on the likely routes of exposure

Potential acute health effects

Eye contact : No known significant effects or critical hazards.
Inhalation : No known significant effects or critical hazards.
Skin contact : No known significant effects or critical hazards.
Ingestion : No known significant effects or critical hazards.

Over-exposure signs/symptoms

Eye contact : No specific data.
Inhalation : No specific data.
Skin contact : No specific data.
Ingestion : No specific data.

Delayed and immediate effects and also chronic effects from short and long term exposure

Conclusion/Summary : There are no data available on the mixture itself. If splashed in the eyes, the liquid may cause irritation and reversible damage. Ingestion may cause nausea, diarrhea and vomiting. This takes into account, where known, delayed and immediate effects and also chronic effects of components from short-term and long-term exposure by oral, inhalation and dermal routes of exposure and eye contact.

Short term exposure

Potential immediate effects : There are no data available on the mixture itself.
Potential delayed effects : There are no data available on the mixture itself.

Long term exposure

Section 11. Toxicological information

Potential immediate effects : There are no data available on the mixture itself.

Potential delayed effects : There are no data available on the mixture itself.

Potential chronic health effects

General : No known significant effects or critical hazards.

Carcinogenicity : Suspected of causing cancer. Risk of cancer depends on duration and level of exposure.

Mutagenicity : No known significant effects or critical hazards.

Teratogenicity : No known significant effects or critical hazards.

Developmental effects : No known significant effects or critical hazards.

Fertility effects : No known significant effects or critical hazards.

Numerical measures of toxicity

Acute toxicity estimates

Route	ATE value
Oral	223758.3 mg/kg

Section 12. Ecological information

Toxicity

Product/ingredient name	Result	Species	Exposure
titanium dioxide	Acute LC50 >100 mg/l Fresh water	Daphnia - Daphnia magna	48 hours

Persistence and degradability

Not available.

Bioaccumulative potential

Not available.

Mobility in soil

Soil/water partition coefficient (K_{OC}) : Not available.

Section 13. Disposal considerations

Disposal methods : The generation of waste should be avoided or minimized wherever possible. Disposal of this product, solutions and any by-products should at all times comply with the requirements of environmental protection and waste disposal legislation and any regional local authority requirements. Dispose of surplus and non-recyclable products via a licensed waste disposal contractor. Waste should not be disposed of untreated to the sewer unless fully compliant with the requirements of all authorities with jurisdiction. Waste packaging should be recycled. Incineration or landfill should only be considered when recycling is not feasible. This material and its container must be disposed of in a safe way. Care should be taken when handling emptied containers that have not been

Section 13. Disposal considerations

cleaned or rinsed out. Empty containers or liners may retain some product residues. Avoid dispersal of spilled material and runoff and contact with soil, waterways, drains and sewers.

Disposal should be in accordance with applicable regional, national and local laws and regulations.

Refer to Section 7: HANDLING AND STORAGE and Section 8: EXPOSURE CONTROLS/PERSONAL PROTECTION for additional handling information and protection of employees. Section 6. Accidental release measures

14. Transport information

	DOT	IMDG	IATA
UN number	Not regulated.	Not regulated.	Not regulated.
UN proper shipping name	-	-	-
Transport hazard class (es)	-	-	-
Packing group	-	-	-
Environmental hazards	No.	No.	No.
Marine pollutant substances	Not applicable.	Not applicable.	Not applicable.

Additional information

DOT : None identified.

IMDG : None identified.

IATA : None identified.

Special precautions for user : **Transport within user's premises:** always transport in closed containers that are upright and secure. Ensure that persons transporting the product know what to do in the event of an accident or spillage.

Section 15. Regulatory information

United States

United States inventory (TSCA 8b) : All components are listed or exempted.

United States - TSCA 5(e) - Substances consent order:
partially fluorinated alcohol, reaction products — Listed

United States - TSCA 5(a)2 - Proposed significant new use rules:
partially fluorinated alcohol, reaction products — Listed

SARA 302/304

SARA 304 RQ : Not applicable.

Composition/information on ingredients

No products were found.

SARA 311/312

Section 15. Regulatory information

Classification : Delayed (chronic) health hazard

Composition/information on ingredients

Name	Fire hazard	Sudden release of pressure	Reactive	Immediate (acute) health hazard	Delayed (chronic) health hazard
titanium dioxide	No.	No.	No.	No.	Yes.

Additional environmental information is contained on the Environmental Data Sheet for this product, which can be obtained from your PPG representative.

Section 16. Other information

Hazardous Material Information System (U.S.A.)

Health : 1 * **Flammability** : 1 **Physical hazards** : 0

(*) - Chronic effects

Caution: HMIS® ratings are based on a 0-4 rating scale, with 0 representing minimal hazards or risks, and 4 representing significant hazards or risks Although HMIS® ratings are not required on MSDSs under 29 CFR 1910.1200, the preparer may choose to provide them. HMIS® ratings are to be used with a fully implemented HMIS® program. HMIS® is a registered mark of the National Paint & Coatings Association (NPCA). HMIS® materials may be purchased exclusively from J. J. Keller (800) 327-6868.

The customer is responsible for determining the PPE code for this material.

National Fire Protection Association (U.S.A.)

Health : 1 **Flammability** : 1 **Instability** : 0

Date of previous issue : **8/18/2015**

Organization that prepared the MSDS : EHS

Key to abbreviations : ATE = Acute Toxicity Estimate
BCF = Bioconcentration Factor
GHS = Globally Harmonized System of Classification and Labelling of Chemicals
IATA = International Air Transport Association
IBC = Intermediate Bulk Container
IMDG = International Maritime Dangerous Goods
LogPow = logarithm of the octanol/water partition coefficient
MARPOL 73/78 = International Convention for the Prevention of Pollution From Ships, 1973 as modified by the Protocol of 1978. ("Marpol" = marine pollution)
UN = United Nations

Indicates information that has changed from previously issued version.

Disclaimer

The information contained in this data sheet is based on present scientific and technical knowledge. The purpose of this information is to draw attention to the health and safety aspects concerning the products supplied by PPG, and to recommend precautionary measures for the storage and handling of the products. No warranty or guarantee is given in respect of the properties of the products. No liability can be accepted for any failure to observe the precautionary measures described in this data sheet or for any misuse of the products.

EA Engineering, Science, and Technology, Inc., PBC

Submittal Review Sheet 1

Project Name: **Kirtland BFF Mid-Plume Pump and Treat System Expansion**				Date Received: **2/17/2016**		
Project Owner: **Kirtland Air Force Base**				Checked By: **LLR**		
Contractor: **TECHAS, Inc.**	Engineer: **EA Engineering, Science and Technology, Inc., PBC.**			Log Page: **NA**		
Address: **4819 West Bayshore Drive** **Bacliff, TX 77518**	Address: **320 Gold Ave. SW, Suite 1300** **Albuquerque, NM 87102**			EA No.: **62599DM01**		
				Spec. Section: **See Comments**		
				Drawing/Detail No.: **See Comments**		
ATTN: **Ed Butler**	ATTN: **Devon Jercinovic**			1st Sub		Re-Sub
Date Transmitted: **2/11/2016**	Prev. Transmittal Date:					

Item No.	No. Copies	Description	Manufacturer	Mfg/Vendor Dwg or Detail	Action Taken*
1	1	Steel Water Tanks	Brown-Minneapolis Tank		C9

The Action Designated Above is in Accordance with the Following Legend:

A – Furnish as Submitted
B – Furnish as Noted
C – Revise and Re-submit
1. Not enough information for review.
2. No reproducible submitted.
3. Copies illegible.
4. Not enough copies submitted.
5. Wrong sequence number.
6. Wrong resubmittal number.
7. Wrong Spec. Section.
8. Wrong form used.
9. See Comments.

D – Rejected
E – Engineer's Review not Required
1. Submittal not required.
2. Supplemental Information. Submittal retained for Information purposes only.
3. Information reviewed and approved on prior submittal.
4. See Comments.

Review is for general compliance with Contract Documents. No responsibility is assumed for correctness of dimensions or detail. Contractor is required to specify deviations from contract requirements. Lack of exceptions noted by Engineer does not waive Contractor's obligation to comply with Drawings and Specifications.

Comments:
Items reviewed and confirmed to meet requirements
(Reviewed Material in Parentheses)
Issues in Bold

- Both tanks, T-210 Feed Tank and T-216 Treated Water Tank, will be identical. (Drawings)
- Height: 11' on edge, 11'-10" at peak. **Existing tank are listed as 12' high in Drawings. Do they have more freeboard?** (Drawings)
- High liquid level: 10'-1" (Drawings)
- Freeboard: 0.8656'. **Manufacturer's design justifies this is adequate, but is it less than existing tanks.**
- Diameter: 10'-2" (Drawings)

- Capacity: 6,123 gallons (Drawings)
- Material: Grade A36 Steel
- Thickness:
  - Manufacturer's design justifies thickness
    - bottom thickness 0.25"
    - roof thickness 0.1875"
    - shell thickness 0.25"
- Cleaning: (Spec. 05 50 13)
  - Interior: SSPC SP10 Near-White Blast Cleaning
  - Exterior: SSPC SP6 Commercial Blast Cleaning
- Coatings: (Spec. 05 50 13)
  - Epoxy on interior, 6 to 10 mils thick
  - Epoxy primer and acrylic final coat on exterior, 7 to 12 mils thick
  - Spec. requires all steel receive one coat of Americoat 235 epoxy 5 mils thick. This design meets or exceeds that requirements.
- Color: (Spec. 09 90 00)
  - Exterior is White (selected by Contracting Officer, existing equipment and piping is white)
  - Interior is Light Blue. Interior color is not specified. A blue interior is acceptable.
- Manway: 24" manway at bottom (Drawings)
- Nozzles (Drawings)
  - Top
    - 6" fill nozzle
    - 6" vent nozzle
    - 6" spare nozzle
    - 6" spare nozzle
  - Elevation – 8'-4" from ground
    - 4" level nozzle (80%)
    - 4" spare nozzle
  - Elevation – 1'-2'-1" from ground
    - 6" discharge nozzle
    - 2" drain nozzle
    - 4" level nozzle (20%)
    - 2" level nozzle (20%)
    - 4" spare nozzle
    - 6" spare nozzle
    - **Need one more 6" nozzle at 270º for discharge from TK-216 Treated Water Tank. 6" nozzle at 90º is not needed.**
    - **Does elevation of each level nozzle match existing tanks?**

By: Lucas Rief Date: 2/17/2016

Distribution: [1] Contractor [1] Engineer [1] Owner

EA Engineering, Science, and Technology, Inc., PBC

Submittal Review Sheet 1a

Project Name: **Kirtland BFF Mid-Plume Pump and Treat System Expansion**			Date Received: **4/5/2016**		
Project Owner: **Kirtland Air Force Base**			Checked By: **LLR**		
Contractor: **TECHAS, Inc.**	Engineer: **EA Engineering, Science and Technology, Inc., PBC.**		Log Page: **NA**		
Address: **4819 West Bayshore Drive** **Bacliff, TX 77518**	Address: **320 Gold Ave. SW, Suite 1300** **Albuquerque, NM 87102**		EA No.: **62599DM01**		
			Spec. Section: **See Comments**		
			Drawing/Detail No.: **See Comments**		
ATTN: **Ed Butler**	ATTN: **Devon Jercinovic**		1st Sub		Re-Sub	**X**
Date Transmitted: **4/6/2016**	Prev. Transmittal Date:				

Item No.	No. Copies	Description	Manufacturer	Mfg/Vendor Dwg or Detail	Action Taken*
1	1	Steel Water Tanks - Rev. 1	Brown-Minneapolis Tank		A

The Action Designated Above is in Accordance with the Following Legend:

A – Furnish as Submitted
B – Furnish as Noted
C – Revise and Re-submit
1. Not enough information for review.
2. No reproducible submitted.
3. Copies illegible.
4. Not enough copies submitted.
5. Wrong sequence number.
6. Wrong resubmittal number.
7. Wrong Spec. Section.
8. Wrong form used.
9. See Comments.

D – Rejected
E – Engineer's Review not Required
1. Submittal not required.
2. Supplemental Information. Submittal retained for Information purposes only.
3. Information reviewed and approved on prior submittal.
4. See Comments.

Review is for general compliance with Contract Documents. No responsibility is assumed for correctness of dimensions or detail. Contractor is required to specify deviations from contract requirements. Lack of exceptions noted by Engineer does not waive Contractor's obligation to comply with Drawings and Specifications.

Comments:

By: Lucas Rief Date: 4/6/2016

Distribution: [1] Contractor [1] Engineer [1] Owner

EA Engineering, Science, and Technology, Inc., PBC

Submittal Review Sheet 2

Project Name: **Kirtland BFF Mid-Plume Pump and Treat System Expansion**				Date Received: **2/17/2016**	
Project Owner: **Kirtland Air Force Base**				Checked By: **LLR**	
Contractor: **TECHAS, Inc.**	Engineer: **EA Engineering, Science and Technology, Inc., PBC.**			Log Page: **NA**	
Address: **4819 West Bayshore Drive** **Bacliff, TX 77518**	Address: **320 Gold Ave. SW, Suite 1300** **Albuquerque, NM 87102**			EA No.: **62599DM01**	
				Spec. Section: **Several**	
				Drawing/Detail No.: **Several**	
ATTN: **Ed Butler**	ATTN: **Devon Jercinovic**			1st Sub	Re-Sub
Date Transmitted: **2/11/2016**	Prev. Transmittal Date:				

Item No.	No. Copies	Description	Manufacturer	Mfg/Vendor Dwg or Detail	Action Taken*
1	1	GAC Vessels	Calgon Carbon		C9

The Action Designated Above is in Accordance with the Following Legend:

A – Furnish as Submitted
B – Furnish as Noted
C – Revise and Re-submit
1. Not enough information for review.
2. No reproducible submitted.
3. Copies illegible.
4. Not enough copies submitted.
5. Wrong sequence number.
6. Wrong resubmittal number.
7. Wrong Spec. Section.
8. Wrong form used.
9. See Comments.

D – Rejected
E – Engineer's Review not Required
1. Submittal not required.
2. Supplemental Information. Submittal retained for Information purposes only.
3. Information reviewed and approved on prior submittal.
4. See Comments.

Review is for general compliance with Contract Documents. No responsibility is assumed for correctness of dimensions or detail. Contractor is required to specify deviations from contract requirements. Lack of exceptions noted by Engineer does not waive Contractor's obligation to comply with Drawings and Specifications.

Comments:
Items reviewed and confirmed to meet requirements
(Reviewed Material in Parentheses)
Issues in Bold

- Activated Carbon (compared to TIGG Submittal in Carbon Absorber Design Calculation)
  - Coconut based, for use with dissolved organic contaminants.
  - Specifications match or exceed TIGG material properties
    - Iodine number 1050 mg/g
    - US Sieve 12 x 40
    - Density .4-.7 g/cc
    - Abrasion/Hardness No. 97 min

  - Pressure drop at 400 gpm = 5.5 psig. **Pressure drop for TIGG system is only 1.7 psi. What is cause of higher pressure drop and will additional pressure drop be an issue?**
- Vacuum release Valves (Spec. 40 05 13)
  - 150 psi
  - Plastic. **Spec. requires cast iron for pipelines. We should require the same on equipment.**
- Butterfly Valve (Spec. 40 05 13)
  - Cast Iron
  - Wheel operated
  - **Submittal does not specify disc material. Spec. requires nylon coated discs for pipelines.**
- Ball Valve (Spec. 40 05 13)
  - Bronze
  - PTFE seats and seals
  - 150 psi
  - Also a stainless steel ball valve, 275 psi rating, TFE seats and seals
- Basket Strainer (no spec.)
- Filter Nozzle (no spec.)
- Rubber Expansion Joint (Spec. 40 05 13, Manufacturer's Instructions)
- Hose Coupling (no spec.)
- Quick Disconnect (no spec.)
- Carbon Steel Pipe (Spec. 40 05 13)
  - ASTM A53
  - Grade B
  - Schedule 40
- Galvanized Carbon Steel Pipe (no spec.)
- Fastener (no spec.)
- EPDM Gasket (no spec.)
- Pressure Gage (no spec.)
  - 0-160 psi
- Rupture Disks (no spec.)
- Lined Pipe (no spec.)
- Stainless Steel Pipe (no spec.)
- Coatings: (Spec. 05 50 13)
  - Vinyl ester resin on interior, 35-45 mils thick.
  - Epoxy on exterior, 5-7 mils thick.
  - Spec. requires all steel receive one coat of Americoat 235 epoxy 5 mils thick. This design meets or exceeds that requirements.
- Color: (Spec. 09 90 00)
  - **Exterior color is "slate gray or specified on project drawings". The color should be white to match other pipe.**
- Vessel Lining (no spec.)
  - Vinyl ester resin on interior
  - 2 coat Epoxy on exterior

- Dimensions (Drawings)
  - Center to center distance: 12’
  - Diameter: 10’
  - Height
    - To top of piping:19’-2”
    - To top flange: 17’-6”
      - Door is 20’ tall. Draft Hoist Plan indicates vessel will be placed in front of door and machinery moving personnel will move the tank inside the facility and place in locations per customer’s request.
- Capacity (Drawings)
  - 20,000 lbs

By: Lucas Rief Date: 2/17/2016

Distribution: [1] Contractor [1] Engineer [1] Owner

EA Engineering, Science, and Technology, Inc., PBC

Submittal Review Sheet 2a

Project Name: **Kirtland BFF Mid-Plume Pump and Treat System Expansion**				Date Received: **3/31/2016**			
Project Owner: **Kirtland Air Force Base**				Checked By: **LLR**			
Contractor: **TECHAS, Inc.**	Engineer: **EA Engineering, Science and Technology, Inc., PBC.**			Log Page: **NA**			
Address: **4819 West Bayshore Drive** **Bacliff, TX 77518**	Address: **320 Gold Ave. SW, Suite 1300** **Albuquerque, NM 87102**			EA No.: **62599DM01**			
				Spec. Section: **Several**			
				Drawing/Detail No.: **Several**			
ATTN: **Ed Butler**	ATTN: **Devon Jercinovic**			1st Sub		Re-Sub	**X**
Date Transmitted: **4/13/2016**	Prev. Transmittal Date:						

Item No.	No. Copies	Description	Manufacturer	Mfg/Vendor Dwg or Detail	Action Taken*
1	1	GAC Vessels – Rev. 1	Calgon Carbon		B

The Action Designated Above is in Accordance with the Following Legend:

A – Furnish as Submitted
B – Furnish as Noted
C – Revise and Re-submit
1. Not enough information for review.
2. No reproducible submitted.
3. Copies illegible.
4. Not enough copies submitted.
5. Wrong sequence number.
6. Wrong resubmittal number.
7. Wrong Spec. Section.
8. Wrong form used.
9. See Comments.

D – Rejected
E – Engineer's Review not Required
1. Submittal not required.
2. Supplemental Information. Submittal retained for Information purposes only.
3. Information reviewed and approved on prior submittal.
4. See Comments.

Review is for general compliance with Contract Documents. No responsibility is assumed for correctness of dimensions or detail. Contractor is required to specify deviations from contract requirements. Lack of exceptions noted by Engineer does not waive Contractor's obligation to comply with Drawings and Specifications.

Comments:

Exterior Color shall match existing piping, GAC Vessels, and tanks. Pittsburg Paint has coordinated coatings on existing equipment. Their representative is Robert Knapp. Ceilings are sub straight fall white, pipes are DTM straight white semi-gloss, and the outside is DTM semi-gloss bronze. The Pittsburg Paint job number is 8837339 and will be on file.

By: Lucas Rief Date: 4/13/2016

Distribution: [1] Contractor [1] Engineer [1] Owner

EA Engineering, Science, and Technology, Inc., PBC

Submittal Review Sheet 3

Project Name: **Kirtland BFF Mid-Plume Pump and Treat System Expansion**			Date Received: **2/17/2016**
Project Owner: **Kirtland Air Force Base**			Checked By: **LLR**
Contractor: **TECHAS, Inc.**	Engineer: **EA Engineering, Science and Technology, Inc., PBC.**		Log Page: **NA**
Address: **4819 West Bayshore Drive** **Bacliff, TX 77518**	Address: **320 Gold Ave. SW, Suite 1300** **Albuquerque, NM 87102**		EA No.: **62599DM01**
			Spec. Section: **Several**
			Drawing/Detail No.: **Several**
ATTN: **Ed Butler**	ATTN: **Devon Jercinovic**	1st Sub	Re-Sub
Date Transmitted: **2/11/2016**	Prev. Transmittal Date:		

Item No.	No. Copies	Description	Manufacturer	Mfg/Vendor Dwg or Detail	Action Taken*
1	1	Bag Filter Skids	Fliteway Technologies, Inc.		B

The Action Designated Above is in Accordance with the Following Legend:

A – Furnish as Submitted
B – Furnish as Noted
C – Revise and Re-submit
1. Not enough information for review.
2. No reproducible submitted.
3. Copies illegible.
4. Not enough copies submitted.
5. Wrong sequence number.
6. Wrong resubmittal number.
7. Wrong Spec. Section.
8. Wrong form used.
9. See Comments.

D – Rejected
E – Engineer's Review not Required
1. Submittal not required.
2. Supplemental Information. Submittal retained for Information purposes only.
3. Information reviewed and approved on prior submittal.
4. See Comments.

Review is for general compliance with Contract Documents. No responsibility is assumed for correctness of dimensions or detail. Contractor is required to specify deviations from contract requirements. Lack of exceptions noted by Engineer does not waive Contractor's obligation to comply with Drawings and Specifications.

Comments:
Items reviewed and confirmed to meet requirements
(Reviewed Material in Parentheses)
Issues in Bold

- Pumps and bag filters are same as existing treatment train.
  - Equipment is equal to previously reviewed and approved existing equipment.
- Numbering (Drawings)
  - **Pump and Bag Filter item numbers should be updated for to 200s expansion equipment. For Example: P-118 to P-218.**
- Skid Dimensions (Drawings)
  - 6'x10'

EA Engineering, Science, and Technology, Inc., PBC

- Instrumentation for tanks (Drawings)
  - One set for each tank
    - 1 Liquid level indicating transmitter
    - 2 Liquid level switches: low and high level float switches
- Feed Pumps (Drawings)
  - 2 Goulds Model 3196
  - HP: 15HP
  - Head:100
  - GPM: 200 each
- Bag Filters, feed and treated water skids (Drawings)
  - Pentair
  - 30”
  - 6 bags
- Treated Water Pump (Drawings)
  - Goulds Model 3196
  - HP: 40
  - Head: 180 FT
  - GPM: 400
- Junction Box (Spec. 26 20 00)
- VFD (Spec. 40 96 00)

By: Lucas Rief Date: 2/17/2016

Distribution: [1] Contractor [1] Engineer [1] Owner

EA Engineering, Science, and Technology, Inc., PBC

Submittal Review Sheet 3a

Project Name: **Kirtland BFF Mid-Plume Pump and Treat System Expansion**				Date Received: **4/7/2016**			
Project Owner: **Kirtland Air Force Base**				Checked By: **LLR**			
Contractor: **TECHAS, Inc.**	Engineer: **EA Engineering, Science and Technology, Inc., PBC.**			Log Page: **NA**			
Address: **4819 West Bayshore Drive** **Bacliff, TX 77518**	Address: **320 Gold Ave. SW, Suite 1300** **Albuquerque, NM 87102**			EA No.: **62599DM01**			
				Spec. Section: **Several**			
				Drawing/Detail No.: **Several**			
ATTN: **Ed Butler**	ATTN: **Devon Jercinovic**			1st Sub		Re-Sub	**X**
Date Transmitted: **4/7/2016**	Prev. Transmittal Date:						

Item No.	No. Copies	Description	Manufacturer	Mfg/Vendor Dwg or Detail	Action Taken*
1	1	Bag Filter Skids - Rev 1	Fliteway Technologies, Inc.		A

The Action Designated Above is in Accordance with the Following Legend:

A – Furnish as Submitted
B – Furnish as Noted
C – Revise and Re-submit
1. Not enough information for review.
2. No reproducible submitted.
3. Copies illegible.
4. Not enough copies submitted.
5. Wrong sequence number.
6. Wrong resubmittal number.
7. Wrong Spec. Section.
8. Wrong form used.
9. See Comments.

D – Rejected
E – Engineer's Review not Required
1. Submittal not required.
2. Supplemental Information. Submittal retained for Information purposes only.
3. Information reviewed and approved on prior submittal.
4. See Comments.

Review is for general compliance with Contract Documents. No responsibility is assumed for correctness of dimensions or detail. Contractor is required to specify deviations from contract requirements. Lack of exceptions noted by Engineer does not waive Contractor's obligation to comply with Drawings and Specifications.

Comments:

By: Lucas Rief Date: 4/7/2016

Distribution: [1] Contractor [1] Engineer [1] Owner

EA Engineering, Science, and Technology, Inc., PBC

Submittal Review Sheet 4

Project Name: **Kirtland BFF Groundwater Treatment System Expansion**				Date Received: **9/15/2016**	
Project Owner: **Kirtland Air Force Base**				Checked By: **LLR**	
Contractor: **TECHAS, Inc.**	Engineer: **EA Engineering, Science and Technology, Inc., PBC.**			Log Page: **NA**	
Address: **4819 West Bayshore Drive** **Bacliff, TX 77518**	Address: **320 Gold Ave. SW, Suite 1300** **Albuquerque, NM 87102**			EA No.: **62599DM01**	
				Spec. Section: **40 05 13 1.4.3**	
				Drawing/Detail No.: **NA**	
ATTN: **Ed Butler**	ATTN: **Devon Jercinovic**			1st Sub	**X** Re-Sub
Date Transmitted: **9/22/2016**	Prev. Transmittal Date:				

Item No.	No. Copies	Description	Manufacturer	Mfg/Vendor Dwg or Detail	Action Taken*
1	1	Welding Procedures	Rupert		A

The Action Designated Above is in Accordance with the Following Legend:

A – Furnish as Submitted
B – Furnish as Noted
C – Revise and Re-submit
1. Not enough information for review.
2. No reproducible submitted.
3. Copies illegible.
4. Not enough copies submitted.
5. Wrong sequence number.
6. Wrong resubmittal number.
7. Wrong Spec. Section.
8. Wrong form used.
9. See Comments.

D – Rejected
E – Engineer's Review not Required
1. Submittal not required.
2. Supplemental Information. Submittal retained for Information purposes only.
3. Information reviewed and approved on prior submittal.
4. See Comments.

Review is for general compliance with Contract Documents. No responsibility is assumed for correctness of dimensions or detail. Contractor is required to specify deviations from contract requirements. Lack of exceptions noted by Engineer does not waive Contractor's obligation to comply with Drawings and Specifications.

Comments:
Submittal meets requirements of specification 40 05 13 1.4.3 by providing names of all qualified welders and support data for butt welded joints and lap and tee fillet welds.
Submittal meets requirements of specification 40 05 13.96 by providing copies of welding procedures, test records, and qualifying data for a testing laboratory.
Welder qualifications are provided for Ron Rupert, Mike Rupert, Elias Gallegos, and testing lab is Atomic Inspection Labs.

By: Lucas Rief Date: 9/22/2016

Distribution: [1] Contractor [1] Engineer [1] Owner

EA Engineering, Science, and Technology, Inc., PBC

Submittal Review Sheet 5

Project Name: **Kirtland BFF Groundwater Treatment System Expansion**				Date Received: **9/15/2016**			
Project Owner: **Kirtland Air Force Base**				Checked By: **LLR**			
Contractor: **TECHAS, Inc.**	Engineer: **EA Engineering, Science and Technology, Inc., PBC.**			Log Page: **NA**			
Address: **4819 West Bayshore Drive** **Bacliff, TX 77518**	Address: **320 Gold Ave. SW, Suite 1300** **Albuquerque, NM 87102**			EA No.: **62599DM01**			
				Spec. Section: **05 50 13**			
				Drawing/Detail No.: **NA**			
ATTN: **Ed Butler**	ATTN: **Devon Jercinovic**			1st Sub	**X**	Re-Sub	
Date Transmitted: **9/22/2016**	Prev. Transmittal Date:						

Item No.	No. Copies	Description	Manufacturer	Mfg/Vendor Dwg or Detail	Action Taken*
1	1	Pipe Supports	Pace Metals		B

The Action Designated Above is in Accordance with the Following Legend:

A – Furnish as Submitted
B – Furnish as Noted
C – Revise and Re-submit
1. Not enough information for review.
2. No reproducible submitted.
3. Copies illegible.
4. Not enough copies submitted.
5. Wrong sequence number.
6. Wrong resubmittal number.
7. Wrong Spec. Section.
8. Wrong form used.
9. See Comments.

D – Rejected
E – Engineer's Review not Required
1. Submittal not required.
2. Supplemental Information. Submittal retained for Information purposes only.
3. Information reviewed and approved on prior submittal.
4. See Comments.

Review is for general compliance with Contract Documents. No responsibility is assumed for correctness of dimensions or detail. Contractor is required to specify deviations from contract requirements. Lack of exceptions noted by Engineer does not waive Contractor's obligation to comply with Drawings and Specifications.

Comments:
Furnish as noted below:
Not enough parts to build all supports needed. Should have all parts for:
PS-2B x 1 w/ 4 parts
PS-3C x 2 w/ 4 parts each
PS-4C x 2 w/ 4 parts each
PS-4D x 2 w/ 4 parts each
PS-5B x 1 w/ 3 parts
PS-6B x 6 w/ 2 parts each
PS-7B x 1 w/ 2 parts
PS-8B x 1 w/ 2 parts
Total of 47 parts required, submittal only shows 26 parts. It is understood that the remaining 21 parts have been previously prepared for the original plant construction and have been stored offsite. These will be further inspected upon arrival at the site for expansion construction.

EA Engineering, Science, and Technology, Inc., PBC

The submittal is not clear if pipe support components will be shop welded and delivered to the site fully assembled. Welding is not allowed on site without permit.

Additional Notes:
Submittal includes shop drawings meeting requirements of specification 05 50 13 1.2.
Steel members meet all correct ASTM standards, ASTM A992, A36, A500, A53
Hilti TZ and HLT anchor bolts match drawings
Surfaces will be prepped for painting with SSPC – SP2
Angle B1 for support PS-5B is thicker than required, 3/8" vs 5/16".

By: Lucas Rief Date: 9/28/2016

Distribution: [1] Contractor [1] Engineer [1] Owner

EA Engineering, Science, and Technology, Inc., PBC

Submittal Review Sheet 5a

Project Name: **Kirtland BFF Groundwater Treatment System Expansion**				Date Received: **10/5/2016**			
Project Owner: **Kirtland Air Force Base**				Checked By: **LLR**			
Contractor: **TECHAS, Inc.**	Engineer: **EA Engineering, Science and Technology, Inc., PBC.**			Log Page: **NA**			
Address: **4819 West Bayshore Drive** **Bacliff, TX 77518**	Address: **320 Gold Ave. SW, Suite 1300** **Albuquerque, NM 87102**			EA No.: **62599DM01**			
				Spec. Section: **05 50 13**			
				Drawing/Detail No.: **NA**			
ATTN: **Ed Butler**	ATTN: **Devon Jercinovic**			1st Sub		Re-Sub	**X**
Date Transmitted: **10/6/2016**	Prev. Transmittal Date: **9/22/2016**						
Item No.	No. Copies	Description	Manufacturer	Mfg/Vendor Dwg or Detail		Action Taken*	
1	1	Pipe Supports – REV 1	Pace Metals			B	

The Action Designated Above is in Accordance with the Following Legend:

A – Furnish as Submitted
B – Furnish as Noted
C – Revise and Re-submit
1. Not enough information for review.
2. No reproducible submitted.
3. Copies illegible.
4. Not enough copies submitted.
5. Wrong sequence number.
6. Wrong resubmittal number.
7. Wrong Spec. Section.
8. Wrong form used.
9. See Comments.

D – Rejected
E – Engineer's Review not Required
1. Submittal not required.
2. Supplemental Information. Submittal retained for Information purposes only.
3. Information reviewed and approved on prior submittal.
4. See Comments.

Review is for general compliance with Contract Documents. No responsibility is assumed for correctness of dimensions or detail. Contractor is required to specify deviations from contract requirements. Lack of exceptions noted by Engineer does not waive Contractor's obligation to comply with Drawings and Specifications.

Comments:
Parts are shown for:
PS-1B x 1 w/ 4 parts
PS-2B x 3 w/ 4 parts each
PS-3C x 2 w/ 4 parts each
PS-4C x 2 w/ 4 parts each
PS-4D x 2 w/ 4 parts each
PS-5B x 1 w/ 4 parts
PS-6B x 6 w/ 2 parts each
PS-7B x 1 w/ 2 parts
PS-8B x 1 w/ 2 parts
Total of 60 parts. Parts shown meet or exceed design dimensions shown in CB&I Drawings.

EA Engineering, Science, and Technology, Inc., PBC

Furnish as noted below:
Bill of materials lists only 54 parts but details are shown for all 60 parts. Missing parts in bill of materials are D1x2, E2x2, and H2x2. Include all parts shown in details.

All pipe support components must be shop welded and delivered to the site fully assembled. Welding is not allowed on site without permit.

Additional Notes:
Submittal includes shop drawings meeting requirements of specification 05 50 13 1.2.
Steel members meet all correct ASTM standards, ASTM A992, A36, A500, A53
Hilti TZ and HLT anchor bolts match drawings
Surfaces will be prepped for painting with SSPC – SP2
Angle B1 for support PS-5B is thicker than required, 3/8" vs 5/16".

By: Lucas Rief Date: 10/6/2016

Distribution: [1] Contractor [1] Engineer [1] Owner

EA Engineering, Science, and Technology, Inc., PBC

Submittal Review Sheet 6

Project Name: **Kirtland BFF Groundwater Treatment System Expansion**				Date Received: **9/15/2016**	
Project Owner: **Kirtland Air Force Base**				Checked By: **LLR**	
Contractor: **TECHAS, Inc.**	Engineer: **EA Engineering, Science and Technology, Inc., PBC.**			Log Page: **NA**	
Address: **4819 West Bayshore Drive** **Bacliff, TX 77518**	Address: **320 Gold Ave. SW, Suite 1300** **Albuquerque, NM 87102**			EA No.: **62599DM01**	
				Spec. Section: **40 05 13 2.1**	
				Drawing/Detail No.: **NA**	
ATTN: **Ed Butler**	ATTN: **Devon Jercinovic**			1st Sub	**X** Re-Sub
Date Transmitted: **9/23/2016**	Prev. Transmittal Date:				

Item No.	No. Copies	Description	Manufacturer	Mfg/Vendor Dwg or Detail	Action Taken*
1	1	Pipe Fabrication	Rupert		A

The Action Designated Above is in Accordance with the Following Legend:

A – Furnish as Submitted
B – Furnish as Noted
C – Revise and Re-submit
1. Not enough information for review.
2. No reproducible submitted.
3. Copies illegible.
4. Not enough copies submitted.
5. Wrong sequence number.
6. Wrong resubmittal number.
7. Wrong Spec. Section.
8. Wrong form used.
9. See Comments.

D – Rejected
E – Engineer's Review not Required
1. Submittal not required.
2. Supplemental Information. Submittal retained for Information purposes only.
3. Information reviewed and approved on prior submittal.
4. See Comments.

Review is for general compliance with Contract Documents. No responsibility is assumed for correctness of dimensions or detail. Contractor is required to specify deviations from contract requirements. Lack of exceptions noted by Engineer does not waive Contractor's obligation to comply with Drawings and Specifications.

Comments:
Submittal was checked against requirements in Drawing P-001 Specifications, Part 2.2 Carbon Steel Piping System and specification 40 05 13.
Submittal includes data sheets for fittings (ASTM A 234), flanges (ASTM A 105), carbon steel pipe (ASTM A 106 is equivalent to ASTM A 53, and is required to be seamless), air release valve (150 psi), butterfly valves (must be nylon coated disc and EPDM seats), ball valves (bronze body with PTFE seats), tank vents, wye strainers (FYW, carbon steel), and bolts.
The submittal requests to use B7 bolts in place of B5 bolts. Tensile strength and yield strength of B7 bolts is greater than B5 bolts, therefore they will be acceptable.

By: Lucas Rief Date: 9/23/2016

Distribution: [1] Contractor [1] Engineer [1] Owner

EA Engineering, Science, and Technology, Inc., PBC

Submittal Review Sheet 7

Project Name: **Kirtland BFF Groundwater Treatment System Expansion**				Date Received: **9/15/2016**			
Project Owner: **Kirtland Air Force Base**				Checked By: **LLR**			
Contractor: **TECHAS, Inc.**	Engineer: **EA Engineering, Science and Technology, Inc., PBC.**			Log Page: **NA**			
Address: **4819 West Bayshore Drive** **Bacliff, TX 77518**	Address: **320 Gold Ave. SW, Suite 1300** **Albuquerque, NM 87102**			EA No.: **62599DM01**			
				Spec. Section: **40 05 13**			
				Drawing/Detail No.: **NA**			
ATTN: **Ed Butler**	ATTN: **Devon Jercinovic**			1st Sub	**X**	Re-Sub	
Date Transmitted: **9/23/2016**	Prev. Transmittal Date:						

Item No.	No. Copies	Description	Manufacturer	Mfg/Vendor Dwg or Detail	Action Taken*
1	1	Pipe Shop Drawings	Rupert		A

The Action Designated Above is in Accordance with the Following Legend:

A – Furnish as Submitted
B – Furnish as Noted
C – Revise and Re-submit
1. Not enough information for review.
2. No reproducible submitted.
3. Copies illegible.
4. Not enough copies submitted.
5. Wrong sequence number.
6. Wrong resubmittal number.
7. Wrong Spec. Section.
8. Wrong form used.
9. See Comments.

D – Rejected
E – Engineer's Review not Required
1. Submittal not required.
2. Supplemental Information. Submittal retained for Information purposes only.
3. Information reviewed and approved on prior submittal.
4. See Comments.

Review is for general compliance with Contract Documents. No responsibility is assumed for correctness of dimensions or detail. Contractor is required to specify deviations from contract requirements. Lack of exceptions noted by Engineer does not waive Contractor's obligation to comply with Drawings and Specifications.

Comments:
All pipe is accounted for, submittal indicates it will be revised after equipment is set and final dimensions have been taken.

By: Lucas Rief Date: 9/23/2016

Distribution: [1] Contractor [1] Engineer [1] Owner

EA Engineering, Science, and Technology, Inc., PBC

Submittal Review Sheet 8

Project Name: **Kirtland BFF Groundwater Treatment System Expansion**				Date Received: **10/4/2016**	
Project Owner: **Kirtland Air Force Base**				Checked By: **LLR**	
Contractor: **TECHAS, Inc.**	Engineer: **EA Engineering, Science and Technology, Inc., PBC.**			Log Page: **NA**	
Address: **4819 West Bayshore Drive** **Bacliff, TX 77518**	Address: **320 Gold Ave. SW, Suite 1300** **Albuquerque, NM 87102**			EA No.: **62599DM01**	
				Spec. Section: **09 90 00 3.14.1, 3.14.2**	
				Drawing/Detail No.: **NA**	
ATTN: **Ed Butler**	ATTN: **Devon Jercinovic**			1st Sub	**X** Re-Sub
Date Transmitted: **10/6/2016**	Prev. Transmittal Date:				

Item No.	No. Copies	Description	Manufacturer	Mfg/Vendor Dwg or Detail	Action Taken*
1	1	Exterior Paint Specifications	Pittsburg Paint Group	-	A
2	1	Interior Paint Specifications	Pittsburg Paint Group	-	A

The Action Designated Above is in Accordance with the Following Legend:

A – Furnish as Submitted
B – Furnish as Noted
C – Revise and Re-submit
1. Not enough information for review.
2. No reproducible submitted.
3. Copies illegible.
4. Not enough copies submitted.
5. Wrong sequence number.
6. Wrong resubmittal number.
7. Wrong Spec. Section.
8. Wrong form used.
9. See Comments.

D – Rejected
E – Engineer's Review not Required
1. Submittal not required.
2. Supplemental Information. Submittal retained for Information purposes only.
3. Information reviewed and approved on prior submittal.
4. See Comments.

Review is for general compliance with Contract Documents. No responsibility is assumed for correctness of dimensions or detail. Contractor is required to specify deviations from contract requirements. Lack of exceptions noted by Engineer does not waive Contractor's obligation to comply with Drawings and Specifications.

Comments:
The following primers are included: Devshield 4160, Amerlock 400BF, and Gripper 3210. The following Topcoats are included: Devgoard 4306, Speedhide 6-900XI, Aquapon 35, Speedhide Aluminum 6-230, and Manor Hall 82-500. These coatings fill requirements given in Technical Specification Section 09 90 00 3.14.1 Exterior Paint Tables and 3.14.2 Interior Paint Tables and are the same as coatings submitted for construction of the existing system.

Color of coatings is not included in the submittal.

By: Lucas Rief Date: 10/6/2016

Distribution: [1] Contractor [1] Engineer [1] Owner

CLOSEOUT SUBMITTALS

Series A1F Compact OEM Pressure Switch

Specifications - Installation and Operating Instructions

A1F

A1F with A-447

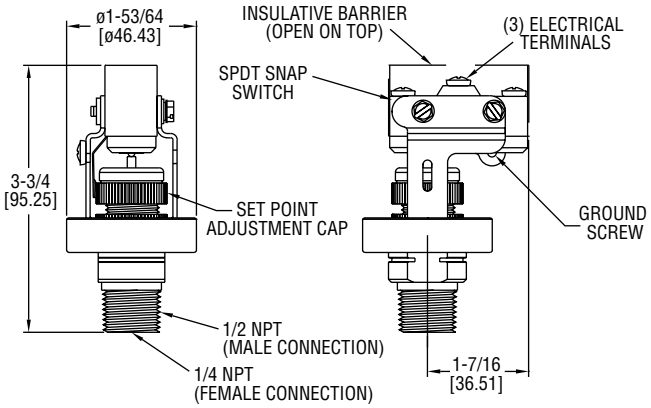

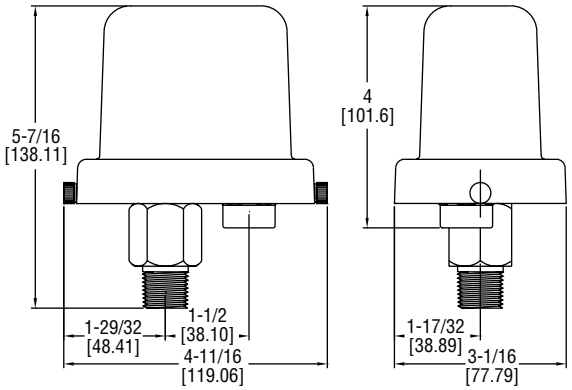

The **SERIES A1F** Compact OEM Pressure Switch is ideal for panel mounting wherever a high-quality, economical open-case or weatherproof control is required.

INSTALLATION

1. Location: Select a location where the temperature limits of -40 to 180°F (-40 to 82°C) will not be exceeded. Locate the switch as close as possible to the pressure source. Long lengths of piping will not affect accuracy of the actuation point but will slightly add to response time.

2. Mounting and Processing Connection: Avoid mounting surfaces with excess vibration which could cause false actuation when pressure is near setpoint. The switch should be mounted within 20° of vertical for proper operation. Mount the switch by connecting it to the process piping using either 1/4″ NPT female or 1/2″ male connection. Pipe joint compound or TFE thread tape should be used to prevent leakage.

3. Electrical Connections: The SPDT snap switch includes normally open, normally closed and common connections. The common and normally open contacts will close and the common and normally closed contacts will open when pressure increases to the setpoint. The actions will reverse when pressure decreases below the setpoint minus the deadband. A green grounding screw is provided on the switch bracket. All wiring should be in accordance with local codes.

SPECIFICATIONS

Service: Compatible liquids and gases.
Wetted Materials: Pressure Chamber: 316 SS; Diaphragm: Fluorocarbon.
Temperature Limit: -40 to 175°F (-40 to 80°C).
Pressure Limits: 500 psig (34 bar).
Enclosure Rating: No rating for open construction. Installed properly within an optional A-447 enclosure meets NEMA 4X standards.
Switch Type: SPDT snap switch.
Electrical Rating: 15A @ 120/240/480 VAC, 1/8 HP @ 125 VAC, 1/4 HP @ 250 VAC.
Electrical Connection: Screw terminals.
Process Connection: 1/4″ female NPT and 1/2″ male NPT.
Mounting Orientation: Within 20° of vertical.
Set Point Adjustment: Knurled screw cap with indicating scale.
Deadband: Fixed, See deadband chart.
Weight: 10.5 oz (297 g).

MERCOID A DIVISION OF DWYER INSTRUMENTS, INC.
P.O. BOX 373 • MICHIGAN CITY, INDIANA 46360, U.S.A.
Phone: 219/879-8000 www.dwyer-inst.com
Fax: 219/872-9057 e-mail: info@dwyermail.com

SETPOINT ADJUSTMENT

1. Determine the setpoint pressure. The approximate actuation point can be set by turning the adjustment cap up or down, aligning the top of the O-ring, located above the cap, with the appropriate scale graduation.
2. Connect tubing or piping from the pressure port on bottom of switch to one leg of a tee. Connect the second leg to a pressure test gage of known accuracy and in an appropriate range. The third leg should be connected to a controllable source of pressure.
3. Connect a volt/ohm meter or other circuit tester to the snap action terminals to indicate when switching occurs.
4. Slowly apply pressure to the system and note the pressure at which switching occurs.
5. Operate the switch through several cycles to confirm proper actuation point.
6. Remove test apparatus and attach switch to pressure source and control circuit wiring. Place switch in service.

Example of how to order:

A1F - O - SS - 1 - 4
1 2 3 4 5

1. Diaphragm Designation:
   F - Fluorocarbon
2. Enclosure Designation:
   O - Open Construction No Enclosure
3. Housing Material Designation:
   SS - 316SS
4. Switch Designation:
   1 - SPDT Snap Action Switch
5. Operating Pressure Range Designation:
   1 - 2 to 15 psig
   2 - 4 to 75 psig
   3 - 8 to 225 psig
   4 - 16 to 450 psig

DEADBAND CHART-PSIG (BAR)		
Range	Deadband at Minimum Range	Deadband at Maximum Range
2 to 15 (0.14 to 1.03)	2 (0.14)	3 (0.21)
4 to 75 (0.28 to 5.17)	4 (0.27)	15 (1.0)
8 to 225 (0.55 to 15.5)	8 (0.55)	25 (1.7)
16 to 450 (1.1 to 31.0)	15 (1.0)	50 (3.5)

MAINTENANCE

Upon final installation of the Series A1F Compact OEM Pressure Switch, no routine maintenance is required. A periodic check of the system calibration is recommended. The Series A1F is not field serviceable and should be returned if repair is needed (field repair should not be attempted and may void warranty). Be sure to include a brief description of the problem plus any relevant application notes. Contact customer service to receive a return goods authorization number before shipping.

©Copyright 2015 Dwyer Instruments, Inc.
Printed in U.S.A. 12/15 FR# 440838-10 Rev. 3

MERCOID A DIVISION OF DWYER INSTRUMENTS, INC.
P.O. BOX 373 • MICHIGAN CITY, INDIANA 46360, U.S.A.
Phone: 219/879-8000 www.dwyer-inst.com
Fax: 219/872-9057 e-mail: info@dwyermail.com

Series A1F Compact OEM Pressure Switch

Specifications - Installation and Operating Instructions

A1F

A1F with A-447

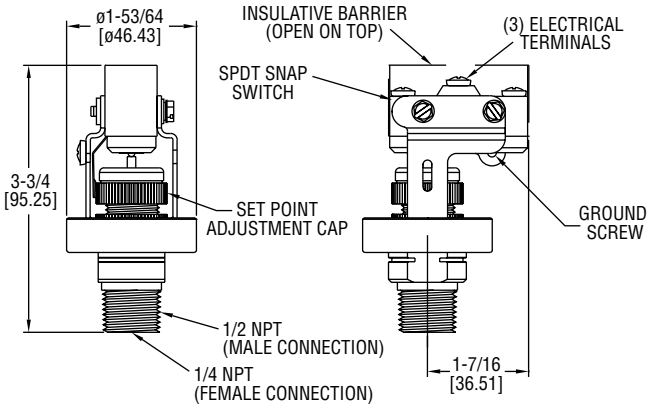

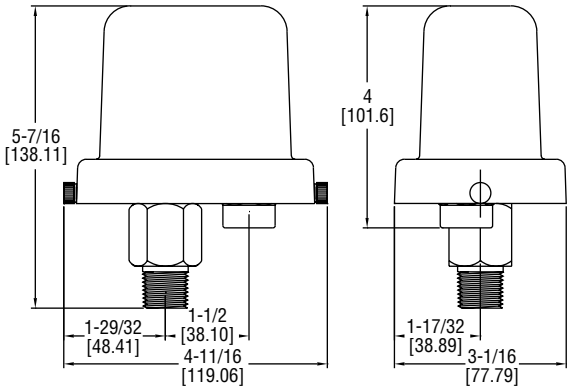

The **SERIES A1F** Compact OEM Pressure Switch is ideal for panel mounting wherever a high-quality, economical open-case or weatherproof control is required.

INSTALLATION

1. Location: Select a location where the temperature limits of -40 to 180°F (-40 to 82°C) will not be exceeded. Locate the switch as close as possible to the pressure source. Long lengths of piping will not affect accuracy of the actuation point but will slightly add to response time.

2. Mounting and Processing Connection: Avoid mounting surfaces with excess vibration which could cause false actuation when pressure is near setpoint. The switch should be mounted within 20° of vertical for proper operation. Mount the switch by connecting it to the process piping using either 1/4″ NPT female or 1/2″ male connection. Pipe joint compound or TFE thread tape should be used to prevent leakage.

3. Electrical Connections: The SPDT snap switch includes normally open, normally closed and common connections. The common and normally open contacts will close and the common and normally closed contacts will open when pressure increases to the setpoint. The actions will reverse when pressure decreases below the setpoint minus the deadband. A green grounding screw is provided on the switch bracket. All wiring should be in accordance with local codes.

SPECIFICATIONS

Service: Compatible liquids and gases.
Wetted Materials: Pressure Chamber: 316 SS; Diaphragm: Fluorocarbon.
Temperature Limit: -40 to 175°F (-40 to 80°C).
Pressure Limits: 500 psig (34 bar).
Enclosure Rating: No rating for open construction. Installed properly within an optional A-447 enclosure meets NEMA 4X standards.
Switch Type: SPDT snap switch.
Electrical Rating: 15A @ 120/240/480 VAC, 1/8 HP @ 125 VAC, 1/4 HP @ 250 VAC.
Electrical Connection: Screw terminals.
Process Connection: 1/4″ female NPT and 1/2″ male NPT.
Mounting Orientation: Within 20° of vertical.
Set Point Adjustment: Knurled screw cap with indicating scale.
Deadband: Fixed, See deadband chart.
Weight: 10.5 oz (297 g).

MERCOID A DIVISION OF DWYER INSTRUMENTS, INC.
P.O. BOX 373 • MICHIGAN CITY, INDIANA 46360, U.S.A.
Phone: 219/879-8000 www.dwyer-inst.com
Fax: 219/872-9057 e-mail: info@dwyermail.com

SETPOINT ADJUSTMENT

1. Determine the setpoint pressure. The approximate actuation point can be set by turning the adjustment cap up or down, aligning the top of the O-ring, located above the cap, with the appropriate scale graduation.
2. Connect tubing or piping from the pressure port on bottom of switch to one leg of a tee. Connect the second leg to a pressure test gage of known accuracy and in an appropriate range. The third leg should be connected to a controllable source of pressure.
3. Connect a volt/ohm meter or other circuit tester to the snap action terminals to indicate when switching occurs.
4. Slowly apply pressure to the system and note the pressure at which switching occurs.
5. Operate the switch through several cycles to confirm proper actuation point.
6. Remove test apparatus and attach switch to pressure source and control circuit wiring. Place switch in service.

Example of how to order:

A1F - O - SS - 1 - 4
1 2 3 4 5

1. Diaphragm Designation:
   F - Fluorocarbon
2. Enclosure Designation:
   O - Open Construction No Enclosure
3. Housing Material Designation:
   SS - 316SS
4. Switch Designation:
   1 - SPDT Snap Action Switch
5. Operating Pressure Range Designation:
   1 - 2 to 15 psig
   2 - 4 to 75 psig
   3 - 8 to 225 psig
   4 - 16 to 450 psig

DEADBAND CHART-PSIG (BAR)		
Range	Deadband at Minimum Range	Deadband at Maximum Range
2 to 15 (0.14 to 1.03)	2 (0.14)	3 (0.21)
4 to 75 (0.28 to 5.17)	4 (0.27)	15 (1.0)
8 to 225 (0.55 to 15.5)	8 (0.55)	25 (1.7)
16 to 450 (1.1 to 31.0)	15 (1.0)	50 (3.5)

MAINTENANCE

Upon final installation of the Series A1F Compact OEM Pressure Switch, no routine maintenance is required. A periodic check of the system calibration is recommended. The Series A1F is not field serviceable and should be returned if repair is needed (field repair should not be attempted and may void warranty). Be sure to include a brief description of the problem plus any relevant application notes. Contact customer service to receive a return goods authorization number before shipping.

©Copyright 2015 Dwyer Instruments, Inc.
Printed in U.S.A. 12/15 FR# 440838-10 Rev. 3

MERCOID A DIVISION OF DWYER INSTRUMENTS, INC.
P.O. BOX 373 • MICHIGAN CITY, INDIANA 46360, U.S.A.
Phone: 219/879-8000 www.dwyer-inst.com
Fax: 219/872-9057 e-mail: info@dwyermail.com

Technical
specification

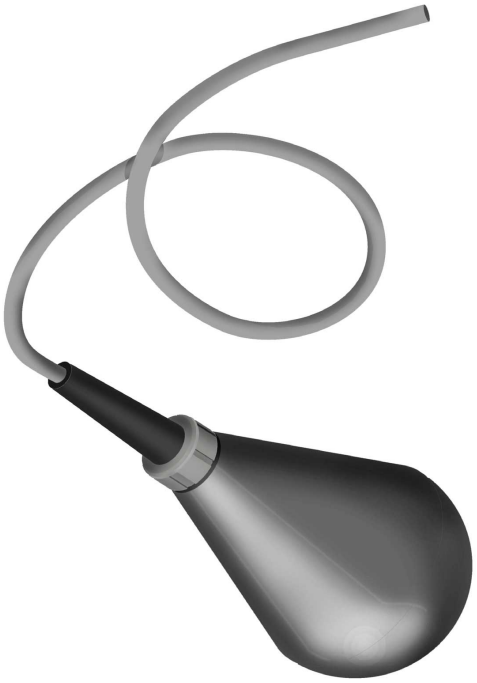

ENM-10 Level regulator

FLYGT
a xylem brand

Table of Contents

PRODUCT DESCRIPTION....2
Product description....2

CHEMICAL RESISTANCE LIST....6
Chemical resistance list....6

PRODUCT RANGE....8
Product range....8

PRODUCT DESCRIPTION

Product description

The simplest possible method for level control! A mechanical switch in a plastic casing, freely suspended at the desired height from its own cable. When the liquid level reaches the regulator, the casing will tilt and the mechanical switch will close or break the circuit, thereby starting or stopping a pump or actuating an alarm device. No wear, no maintenance! In sewage pumping stations, for ground water and drainage pumping – in fact, for most level control applications – the ENM-10 is the ideal solution.

The regulator casing is made of polypropylene and the cable is sheathed with a special PVC or Nitrile/PVC rubber compound. The plastic components are welded and screwed together. Adhesive is never used. Impurities and deposits will not adhere to the smooth casing.

This level regulator is available in different versions, depending upon the medium in which it is to be used. As standard, the regulator can be obtained with 6, 13, 20, 30 or 50 metres (20, 42, 65, 100 or 167 feet) of cable for liquids with specific density between 0.95 and 1.10 g/cm3; for other specific densities and for the Ex-version, the regulator is only available with 20 metres (65 ft) of cable. The regulator can withstand up to 60°C (140°F).

Technical data

Liquid temperature:	min. 0°C (32°F) max. 60°C (140°F)
Liquid density:	min. 0.65 g/cm^3 max. 1.5 g/cm^3
Degree of protection:	IP68, 20 m (65 ft)
Interrupting capacity of micro switch:	AC, resistive load, 250V 10A AC, inductive load, 250V 3A cos ϕ = 0.5 DC, 30V 5A
With gold plated micro switch:	same as above, except: DC, 24V 10mA

Note that local regulations may limit the voltage.

Materials

Body:	Body:
Bending relief:	EPDM rubber
Cable:	special compound PVC or NBR/PVC nitrile/PVC rubber

Dimensions

Table 1

For density g/cm^3	Regulator length mm (in.)	Diameter mm (in.)
0.65–0.80	194 (7 10/16)	100 (4)
0.80–0.95	177 (7)	100 (4)
0.95–1.10	162 (6 3/8)	100 (4)
1.05–1.20	142 (5 9/16)	100 (4)
1.20–1.30	133 (5 1/4)	100 (4)

For density g/cm^3	Regulator length mm (in.)	Diameter mm (in.)
1.30–1.40	130 (5 2/16)	100 (4)
1.40–1.50	126 (5)	100 (4)

Weight: approx. 2 kg (4.5 lb) for a standard density regulator with 20 m cable.

Approvals: CE, CSA, SEMKO, NEMKO, DEMKO

LVD approval according to EN61058

CSA approval: Cert no. 1330172

Cl.I Zone 0, Gr. IIC;

CL.I Div.1 Gr A, B, C&D;

Cl.II Gr. E, F&G;

Cl.III when installed to the certified Intrinsically Safe relay, Ex ia, rated for the locations per submitter controll drawing and installation manual.

Intrincically safe circuits are required for the automatic control system. - Use a EX-safety barrier (e.g. Prod. no. 84 01 07).

0080

Figure 1

Wiring alternative

To conform to local regulations, the level regulators are normally connected through a transformer to a low-tension control circuit.

Two regulators are used; one for starting and one for stopping. A third regulator can be connected if an alarm is required at a given level.

Identical regulators can be used for all functions.

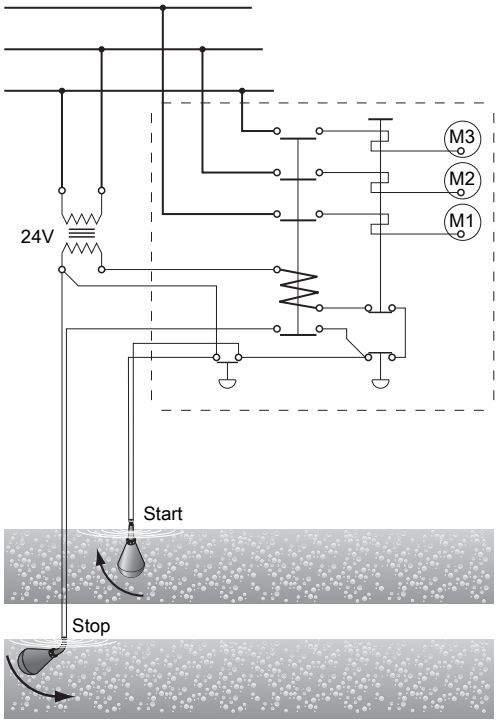

Connect the gray and black leads.

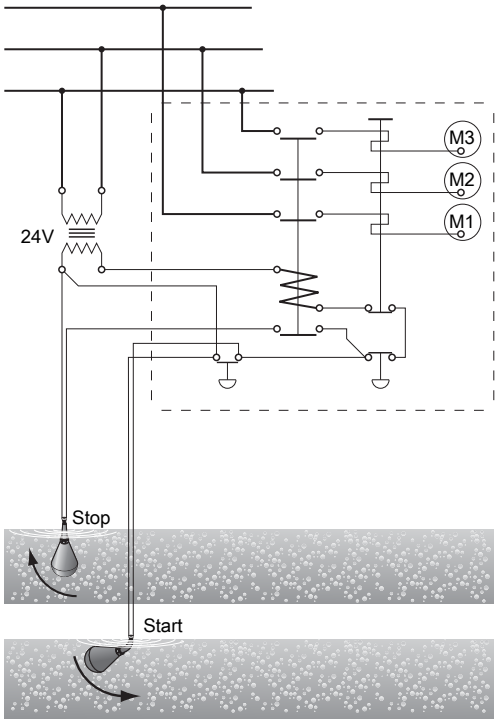

Connect the gray and brown leads.

Insulate the brown lead.
Figure 2: Connected for emptying

Insulate the black lead.
Figure 3: Connected for emptying

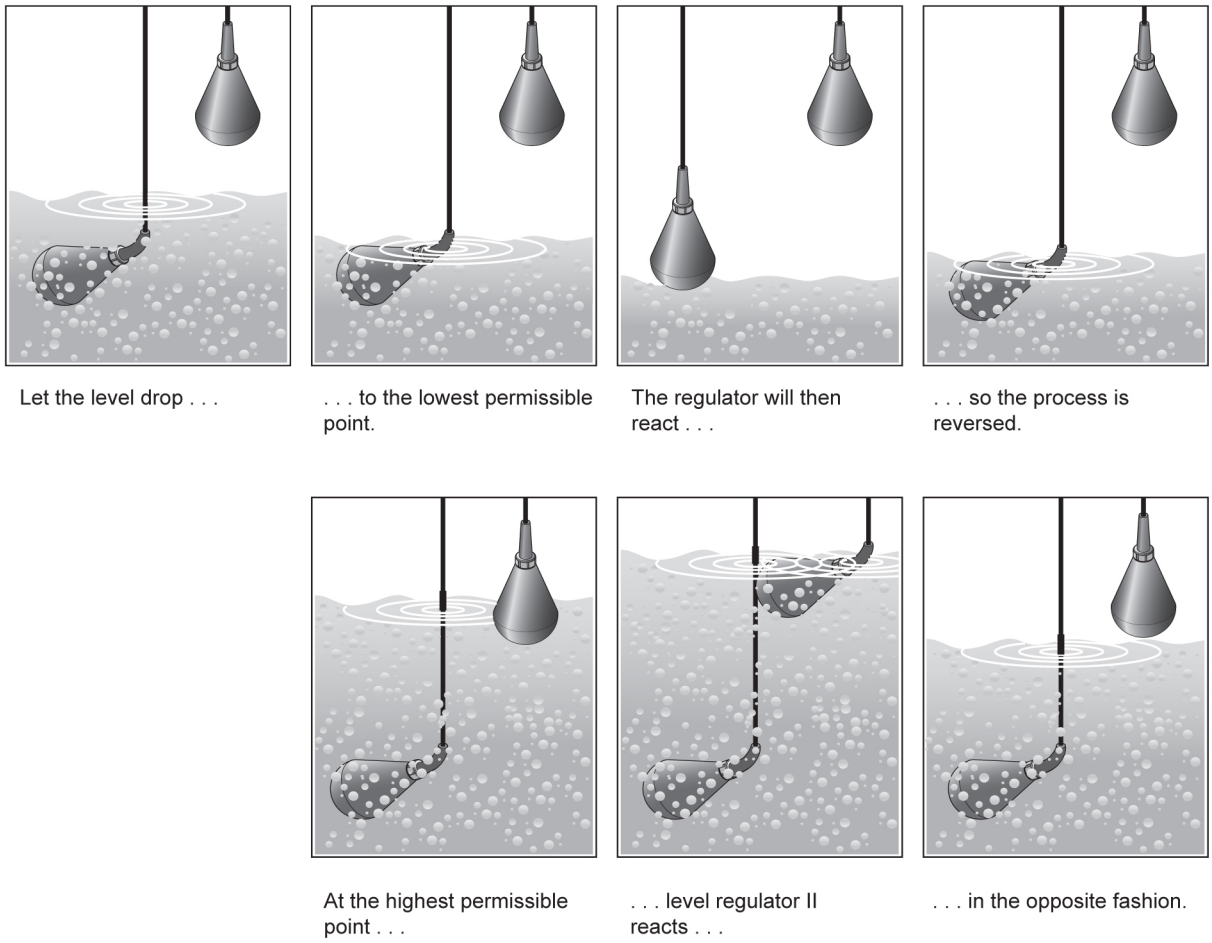

Figure 4

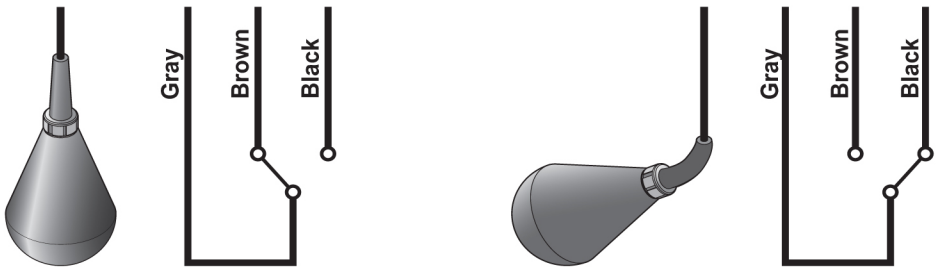

Figure 5: Colour code

Maintenance and repair

ENM-10 is very durable and practically maintenance free. You only have to check on it occasionally, to ensure its continual operation.

- It is recommended to occasionally clean ENM-10, and especially when fat/grease covers the plastic surface.
- At the same time, make an occular inspection of the regulator to make sure neither cable, protective sleeve or plastic casing show any signs of damage.

- A damaged ENM-10 cannot be repaired in any way, due to the hermetic encapsulation. If the unit is found to be damaged, replace it with a new one.
- For Ex-installations, also make absolutely sure that the Ex-barrier (e.g. Prod. no. 84 01 07) is operating correctly - The LED changes when the switch is toggled.

The manufacturers reserve the right to alter performance specification or design without notice.

CHEMICAL RESISTANCE LIST

Chemical resistance list

The liquid in which level regulation is practiced most frequently is, of course, water. Of the millions of regulators in use all over the world today, it is estimated that nine out of ten work in water.

However, with a float body of polypropylene, a cable of PVC or NBR/PVC nitrile/PVC rubber and a bending relief of EPDM rubber, the ENM-10 is virtually insensitive to many aggressive liquids.

The table shows how resistant the ENM-10 equipped with either PVC or NBR/PVC nitrile/PVC rubber cable, is to different chemicals at two different temperatures.

The classification is broken down into the following categories:

0 = No effect, 1 = Minor to moderate and 2 = Severe effect. The sign – means that information is not available.

Keep in mind also that the density of the liquid determines the bouyancy of the regulator. The ENM-10 is made for seven different densities. See *Product description* (page 2).

Always observe local regulations:

Take particular note of:

- risk of fire/explosion
- hygiene requirements

Acids	PVC cable		NBR/PVC nitrile/PVC rubber cable	
	20°C (68°F)	60°C (140°F)	20°C (68°F)	60°C (140°F)
Acetic Acid 50%	1	2	0	0
Acetic Acid 75%	2	2	0	0
Benzoic Acid	2	2	0	0
Boric Acid 5%	0	—	0	0
Butyric Acid	2	2	2	2
Chromic Acid 10%	0	2	2	2
Citric Acid	0	1	0	0
Hydrobromic Acid 5%	1	2	0	0
Hydrochloric Acid 10%	0	1	0	1
Hydrochloric Acid 37%	1	2	0	2
Hydrocyanic Acid 10%	0	0	1	2
Hydrofluoric Acid 5%	0	2	0	1
Hypochloric Acid	1	2	2	2
Maleic Acid	2	2	2	2
Nitric Acid 5%	1	1	1	1
Nitric Acid 65%	2	2	2	2
Oleic Acid	1	2	2	2
Oxalic Acid 50%	1	1	1	2
Phosphoric Acid 25%	0	0	1	2
Phosphoric Acid 85%	0	0	1	2
Sulphuric Acid 10%	1	2	1	2
Sulphuric Acid 78%	2	2	2	2
Tannic Acid	0	0	0	0
Tartaric Acid	1	1	1	1
Bases				
Ammonium Hydroxide	0	—	0	0
Calcium Hydroxide	0	0	0	0
Potassium Hydroxide	1	2	0	0
Sodium Hydroxide	1	2	0	0

Salts	PVC cable		NBR/PVC nitrile/PVC rubber cable	
	20°C (68°F)	60°C (140°F)	20°C (68°F)	60°C (140°F)
Aluminium Chloride	0	0	0	0
Calcium Sulphate	0	0	0	0
Calcium Chloride	0	0	0	0
Calcium Nitrate	0	0	0	0
Copper Chloride	0	0	0	0
Copper Sulphate	0	0	0	0
Ferric Chloride	0	0	0	0
Ferrous Sulphate	0	0	0	0
Magnesium Chloride	0	0	0	0
Potassium Sulphate	0	0	0	0
Potassium Nitrate	0	0	0	0
Potassium Carbonate	1	1	1	1
Potassium Bicarbonate	0	0	0	0
Sodium Sulphate	0	0	0	0
Sodium Chloride	0	0	0	0
Sodium Nitrate	0	0	0	0
Sodium Bicarbonate	0	0	0	0
Sodium Carbonate	0	0	0	0
Tin Chloride	1	1	1	1
Zinc Sulphate	0	0	0	0
Zinc Chloride	0	0	0	0
Oils				
Castor Oil	1	1	1	1
Cocoanut Oil	0	—	0	2
Corn Oil	2	2	2	2
Diesel Oil	2	2	2	2
Linseed Oil	2	2	2	2
Mineral Oils	2	2	2	2
Olive Oil	1	1	1	1
Silicone Oils	0	0	0	0

Solvents and miscellaneous	PVC cable		NBR/PVC nitrile/PVC rubber cable	
	20°C (68°F)	60°C (140°F)	20°C (68°F)	60°C (140°F)
Aceton	2	2	2	2
Aniline	2	2	1	2
Benzene	2	2	2	2
Butyl Alcohol	2	2	0	1
Carbon Tetrachloride	2	2	2	2
Chlorobenzene	2	2	2	2
Chloroform	2	2	2	2
Ethyl Alcohol	2	2	0	1
Ethyl Ether	2	2	2	2
Ethyl Acetate	2	2	2	2
Ethylene Dichloride	2	2	2	2
Ethylene Chloride	2	2	2	2
Formaldehyde 37%	1	2	0	0
Gasoline	2	2	2	2
Kerosene	2	2	2	2
Methyl Alcohol	2	2	0	0
Methyl Ethyl Ketone	2	2	2	2
Methylene Chloride	2	2	2	2
Nitrobenzene	2	2	2	2
Phenol	2	2	2	2
Toluene	2	2	2	2
Trichlorethylene	2	2	2	2
Turpentine	2	2	2	2
Xylene	2	2	2	2
Gases				
Carbon Dioxide	0	0	0	0
Carbon Monoxide	0	0	0	0
Chlorine (wet)	2	2	2	2
Hydrogen Sulphide	0	0	1	1
Sulphur Dioxide (wet)	1	1	2	2

0 = No effect, 1 = Minor to moderate, 2 = Severe effect. – = No information available.

Figure 6

PRODUCT RANGE

Product range

Part no.	For density [g/cm³]	Color of level switch	Type of cable	Cable length [m]	Approvals	For market	Notes
5828800	0,65-0,80	Blue	1	20	CE		
5828801	0,80-0,95	Blue	1	20	CE		
5828802	0,95-1,10	Blue	1	6	CE		
5828803	0,95-1,10	Blue	1	13	CE		
5828804	0,95-1,10	Blue	1	20	CE		
5828805	1,05-1,20	Blue	1	20	CE		
5828806	1,2-1,3	Blue	1	20	CE		
5828807	1,3-1,4	Blue	1	20	CE		
5828808	1,4-1,5	Blue	1	20	CE		
5828809	0,65-0,80	Grey	5	20	CSA/CE	Canada	
5828810	0,80-0,95	Grey	5	20	CSA/CE	Canada	
5828811	0,95-1,10	Grey	5	6	CSA/CE	Canada	
5828812	0,95-1,10	Grey	5	13	CSA/CE	Canada	
5828813	0,95-1,10	Grey	5	20	CSA/CE	Canada	
5828814	1,05-1,20	Grey	5	20	CSA/CE	Canada	
5828815	1,2-1,3	Grey	5	20	CSA/CE	Canada	
5828816	1,3-1,4	Grey	5	20	CSA/CE	Canada	
5828817	1,4-1,5	Grey	5	20	CSA/CE	Canada	
5828818	0,65-0,80	Grey	1	20	CSA/CE	Canada	
5828819	0,80-0,95	Grey	1	20	CSA/CE	Canada	
5828820	0,95-1,10	Grey	1	6	CSA/CE	Canada	
5828821	0,95-1,10	Grey	1	13	CSA/CE	Canada	
5828822	0,95-1,10	Grey	1	20	CSA/CE	Canada	
5828823	1,05-1,20	Grey	1	20	CSA/CE	Canada	
5828824	1,2-1,3	Grey	1	20	CSA/CE	Canada	
5828825	1,3-1,4	Grey	1	20	CSA/CE	Canada	
5828826	1,4-1,5	Grey	1	20	CSA/CE	Canada	
5828827	0,65-0,80	Blue	2	20	CE	USA	
5828828	0,80-0,95	Blue	2	20	CE	USA	
5828829	0,95-1,10	Blue	2	6	CE	USA	
5828830	0,95-1,10	Blue	2	13	CE	USA	
5828831	0,95-1,10	Blue	2	20	CE	USA	
5828832	1,05-1,20	Blue	2	20	CE	USA	
5828833	1,2-1,3	Blue	2	20	CE	USA	
5828834	1,3-1,4	Blue	2	20	CE	USA	
5828835	1,4-1,5	Blue	2	20	CE	USA	
5828836	0,95-1,10	Grey	5	30	CSA/CE	Canada	
5828837	0,95-1,10	Grey	5	50	CSA/CE	Canada	
5828838	0,95-1,10	Grey	5	100	CSA/CE	Canada	
5828839	0,95-1,10	Grey	5	150	CSA/CE	Canada	
5828851	0,95-1,10	Red	3	65	CE		
5828852	0,95-1,10	Red	3	6	CE		
5828853	0,95-1,10	Red	3	13	CE		
5828854	0,95-1,10	Red	3	20	CE		
5828855	0,95-1,10	Red	3	6	CSA/CE	Canada	
5828856	0,95-1,10	Red	3	13	CSA/CE	Canada	
5828857	0,95-1,10	Red	3	20	CSA/CE	Canada	

Cont. →

Figure 7

5828858	0,95-1,10	Red	4	6	CE	USA	
5828859	0,95-1,10	Red	4	13	CE	USA	
5828860	0,95-1,10	Red	4	20	CE	USA	
5828870	0,65-0,80	Blue	5	20	CE		
5828871	0,80-0,95	Blue	5	20	CE		
5828872	0,95-1,10	Blue	5	6	CE		
5828873	0,95-1,10	Blue	5	13	CE		
5828874	0,95-1,10	Blue	5	20	CE		
5828875	1,05-1,20	Blue	5	20	CE		
5828876	1,2-1,3	Blue	5	20	CE		
5828877	1,3-1,4	Blue	5	20	CE		
5828878	1,4-1,5	Blue	5	20	CE		
5828879	0,95-1,10	Blue	1	65	CE		
5828880	0,95-1,10	Blue	1	30	CE		
5828881	0,95-1,10	Blue	1	50	CE		
5828882	0,95-1,10	Grey	1	30	CSA/CE	Canada	
5828883	0,95-1,10	Grey	1	50	CSA/CE	Canada	
5828884	0,95-1,10	Blue	2	30	CE	USA	
5828885	0,95-1,10	Blue	2	50	CE	USA	
5828886	0,95-1,10	Red	3	30	CE		
5828887	0,95-1,10	Red	3	50	CE		
5828890	0,95-1,10	Blue	5	30	CE		
5828891	0,95-1,10	Blue	5	50	CE		
5828892	0,95-1,10	Red	3	6	CE	Japan	
5828893	0,95-1,10	Red	3	13	CE	Japan	
5828894	0,95-1,10	Red	3	20	CE	Japan	
5828895	0,95-1,10	Blue	1	6	CE	Japan	
5828896	0,95-1,10	Blue	1	13	CE	Japan	
5828897	0,95-1,10	Blue	1	20	CE	Japan	
5828898	0,95-1,10	Blue	1	50	CE	Japan	
5947919	0,95-1,10	Blue	5	20	CE		Designed for low current and slow movements
5947920	0,95-1,10	Grey	5	20	CSA/CE		Designed for low current and slow movements

Type of cable:

1. Blue PVC jacket with color coding of wires: Grey/Brown/Black
2. Blue PVC jacket with color coding of wires: Red/White/Black
3. Red PVC jacket with color coding of wires: Grey/Brown/Black
4. Red PVC jacket with color coding of wires: Red/White/Black
5. BLACK NBR/PVC jacket with color coding of wires: Grey/Brown/Black (NBR=Nitrile rubber)

Xylem |ˈzīləm|

1) The tissue in plants that brings water upward from the roots
2) A leading global water technology company

We're 12,000 people unified in a common purpose: creating innovative solutions to meet our world's water needs. Developing new technologies that will improve the way water is used, conserved, and re-used in the future is central to our work. We move, treat, analyze, and return water to the environment, and we help people use water efficiently, in their homes, buildings, factories and farms. In more than 150 countries, we have strong, long-standing relationships with customers who know us for our powerful combination of leading product brands and applications expertise, backed by a legacy of innovation.

For more information on how Xylem can help you, go to xyleminc.com

xylem
Let's Solve Water

Xylem Water Solutions AB
Gesällvägen 33
174 87 Sundbyberg
Sweden
Tel. +46-8-475 60 00
Fax +46-8-475 69 00
http://tpi.xyleminc.com

Visit our Web site for the latest version of this document and more information

The original instruction is in English. All non-English instructions are translations of the original instruction.

© 2011 Xylem Inc

891480_11.1_en.GB_2012-01_TS_ENM-10

KPSI®

Level Transducers

KPSI® User's Manual

18th Edition

February 2010

©This User's Manual is a copyright product of Pressure Systems, Inc., 2009.

Permission is hereby granted to make copies and distribute verbatim copies of this manual, provided the copyright notice and this permission notice are preserved on all copies.

Our Company

Pressure Systems is an ISO9001:2000 certified U.S. manufacturer of submersible and non-submersible (above ground) pressure transducers for environmental, industrial and municipal applications. Our KPSI™ Level and Pressure Transducers have been specified in thousands of projects throughout the United States, Canada and Europe by geologists, system integrators, national engineering firms and a variety of government agencies. Typical applications include, but are not limited to, pump control, tank level monitoring, sewage lift station operation, reservoirs, weirs, flumes, site remediation, watershed management, storm water/well monitoring, pump/pipeline pressures and compressor pressures.

Website and E-Mail

You may visit our website at www.PressureSystems.com to look at our latest new product releases, application notes, product certifications and specifications, as well as Intrinsic Safety control installation drawings. E-mail your questions and comments to us: sales@PressureSystems.com.

E-commerce

Orders may be placed on-line by visiting our e-commerce site *(www.LEVELandPRESSURE.com)* or by contacting the factory or local representative.

Applicable Products

This manual provides information applicable to the use of the following KPSI Level and Pressure Transducers:

Please note: Series 500 and Series 550 (waterMONITOR) have separate manuals.

Level Transducers (Submersible)
Series 700/710/720/730/735
Series 320/330/335/340
Series 300DS
Series 705
Series 750

Pressure Transducers (Non-submersible)
Series 27/28/30

Table of Contents

1.0 Product Description 1
General Characteristics 1
Care and Handling 1
Calibration 1
Approvals 1

2.0 Product Accessories and Options 2
Nose Caps 2
810 SuperDry™ Vent Filter or 815 Aneroid Bellows 2
Sacrificial Anode 2
Absolute/Sealed Gage Transducer 3
Polyurethane & ETFE Jacketed Cable 3
Lightning Protection 4
½" Male NPT Conduit Fitting 4
Electrical Outputs 4
Reverse Signal Output 5
Temperature Output 5
Cable Hanger 5
Submersible Cable Splicing Kit 5

3.0 Installation & Maintenance Tips 6
General Installation Procedures 6
Transducer Anchors 6
Transducer Submersion 6
SuperDry™ Vent Filter (Desiccant) or 815 Aneroid Bellows Installation 6
Cable Protection 6
Bending of Cable 7
Cable Compression 7
4-20 mA Output Wiring 7
VDC Output Wiring 7
Model 750 7
Sealed-Gage Transducer Configured for Altitude Above Sea Level 7
Transducer Position Sensitivity 7
General Maintenance Tips 8
Desiccant Maintenance 8
Clogged Nose Piece or Dirty Diaphragm 8
Cleaning Your Transducer 9
Cleaning the Lightning Protection Data Line Protector 9

4.0 Warranty and Product Return Procedures 10
Restocking Policy 11

Appendix A - Drawings and Diagrams 13
Appendix B - Frequently Asked Questions 17
Appendix C - Field Checkout and Troubleshooting Techniques 20
Appendix D - Calibration Calculations 28

1.0 Product Description

General Characteristics

KPSI™ Level and Pressure Transducers use isolated-diaphragm sensors that are specifically designed for use with hostile fluids and gases. These sensors utilize a silicon pressure cell that has been fitted into a stainless steel or titanium package with an integral, compliant stainless steel or titanium barrier diaphragm. This sensor assembly is housed in a rugged 316 stainless steel or titanium case which provides for a variety of level ranges from 2.3 ft (0.75 m) H_2O through 4614 ft (1408 m) H_2O and pressure inputs from 0-1 (7 kPa) through 0-15000 psi (103 mPa). Our devices feature internal signal conditioning. Standard outputs are 4-20 mA and VDC.

All units containing active electronic components have surge and reverse polarity protection. For ease of use in the field, our transducers are permanently laser engraved with our logo and name, wiring information, part number (P/N), serial number (S/N), date of manufacture (DOM), range, excitation and output. Transducers are offered in diameters of 1.0 (25 mm) and 0.75 inches (19 mm).

Care and Handling

Our transducers are designed for rugged use. However, they need protection from over pressure and sharp impact. When lowering them into a liquid, penetrate the surface slowly and only to the depth necessary. Avoid dropping the unit from above the surface. Clean all transducers by rinsing them in a mild detergent. Direct probing of the diaphragm or attempts to remove protective screens will damage the sensor, voiding the warranty.

Calibration

All transducers are shipped with calibration information unique to each transducer. Make sure you keep each calibration report. However, should you misplace your calibration sheet, you can contact the factory and request a duplicate. All KPSI™ Transducer calibrations are traceable to the National Institute of Standards and Technology (NIST).

Approvals

Most of our products have UL and FM certification for intrinsic safety. Their respective installation control drawings can be downloaded from our website. Several of our product lines also carry ABS approval. Most products are CE compliant to EN 61326-1:2006 and EN 61326-2-3:2006. CE compliant units are labeled accordingly.

2.0 Product Accessories and Options

WARNING: POTENTIAL ELECTROSTATIC CHARGING HAZARD

In hazardous locations:

- **Avoid building up static charge on case of data protector and plastic accessories.**
- **Use damp rag to wipe data protector and plastic accessories to avoid static build up.**

Nose Caps

There are several different user-installable nose caps for the 700, 710, 720, 730, 735 submersible level transducers. The ported nose cap (Delrin) with #8-32UNC-2B threaded hole is best used where weights are required and for those installations where users may encounter sharp, protruding objects. The open-face nose cap which allows maximum contact with the liquid media is ideal for wastewater and "greasy" applications where clogging of the sensor is a concern. The piezometer nose cap allows the unit to be buried in saturated soil without damage to the sensor diaphragm. The 1/4" male NPT pressure nose cap is not only useful for calibration purposes but also allows the device to be used as a submersible or above ground pressure transducer.

WARNING: Caution must be exercised when inserting a screw into the nose cap as the maximum insertion length should not exceed 0.175".

810 SuperDry™ Vent Filter or 815 Aneroid Bellows

All submersible transducers with vented gauge format are supplied with a protective barrier that guards against moisture buildup in the cable vent tube. The 810 SuperDry™ vent filter is installed free of charge and is guaranteed to operate maintenance free for one year. We also offer the 815 Aneroid Bellows as a maintenance free option that can be used on submersibles with accuracies of: ±1%, ±0.5%, or ±0.25% FSO. These barriers ensure reliable operation and long life as they protect sensitive electronic components from mildew and prevent the formation of a liquid column in the vent tube. Any such liquid column directly affects calibration of the transducer.

Sacrificial Anodes

Our sacrificial anodes are made from a special zinc alloy formulated to guarantee continued effectiveness over long periods. Because the anodes are 95% galvanic, they will not corrode unless there is an electrolytic demand. The anode maintains a high driving potential throughout its 12 month life, is self-sluffing and always exposes new zinc for the best possible protection. For those applications where cable buoyancy is a problem, the sacrificial anode can be substituted for hanging weights.

Sacrificial Anodes provide cathodic protection against galvanic corrosion for our submersible pressure transducers. Galvanic corrosion occurs when dissimilar metals are placed in contact with an electrolyte. This condition causes a potential difference to exist between the two metals, causing electron flow between them. Corrosion of the less corrosion-resistant metal is increased and attack of the more resistant metal is decreased. The 820 Sacrificial Anode is clamped to the exterior of a one-inch bore submersible transducer. We also offer a 1" diameter pencil anode, the 825, that attaches to the nose cap of either a 3/4" or 1" bore submersible transducer.

Absolute/Sealed Gage Transducer

The sealed gage option for submersible transducers eliminates the need for a vent filter. The standard output of a sealed gauge transducer is 4 mA at 14.70 psia. Before ordering a sealed gauge transducer, the customer should determine the altitude (above sea level) of the installation and inform PSI's Customer Service of this value before order entry. During manufacture, the output of the transducer will be adjusted to compensate for the altitude difference, if applicable.

Polyurethane & ETFE Jacketed Cable

Most installations of our submersible level transducers connect our polyurethane or ETFE cable to a junction box. From this junction box (P/N 840), users typically run their own cable to the required instrumentation. Polyurethane-jacketed cable is used for most applications while ETFE material is recommended for more aggressive environments.

Specifications for our standard polyurethane and ETFE jacketed cable are as follows:

Specifications	Standard Submersible Cable	Standard Non-Submersible Cable
Weight	0.05 lbs/ft (0.07 kg/m)	0.025 lbs/ft (0.035 kg/m)
Min. OD	0.28" (7.10 mm)	0.189" (4.8 mm)
Max OD	0.31" (7.87 mm)	0.19" (4.9 mm)
Conductors	4 - 22 AWG	22 AWG
Insulation Conductors Outer jacket	PVC Polyurethane or ETFE	Color coded PVC
Shield	36 gauge spiral tinned copper wire foil shield with drain wire	Aluminum/polyester foil facing outward
Vent Tube	Polyethylene, .060" ID (1.52 mm)	Drain wire 7/32 tinned copper

- **Chemical resistance of polyurethane:** Potable Water, Wastewater, Borax, Butane, Animal Fat, Carbonic Acid, Citric Acid, Cod Liver Oil, Corn Oil, Glycerin, Glycol, Mineral Oils, Potassium Nitrate, Potassium Sulfate, Silicone Oils, Stoddard Solvent, Tannic Acid (10), Tartaric Acid, Turbine Oil.

- **Chemical resistance of ETFE:** Acetic Acid (Glacial), Acetic Anhydride, Acetone, Aluminum Chloride, Anti-Freeze, Bromine, Calcium Chloride, Calcium Hydroxide, Chlorine, Copper Chloride, Ferrous Chloride, Hydrochloric Acid, Ketones, Lacquer Thinners, Sulfuric Acid.

The vented cable termination end is specially prepared at the factory to eliminate the potential for moisture migration. Where the lead wires emerge from under the jacket, there's potting material and a shrink tube "boot", every effort should be made to leave this feature intact. Should the cable be longer than needed for the installation, it is recommended that the excess length be accommodated in a service loop and that the potted end of the cable **NOT** be shortened.

The cable attached to this instrument is specifically engineered for submersible applications. The polyurethane outer jacket provides long term reliability under most conditions. The cable should be handled carefully, however, as the jacket may be subject to cutting should it be "raked" over extremely sharp edges. To guard against water incursion should an inadvertent minor cut occur, we have incorporated an exclusive "water block" feature immediately beneath the jacket. The cable is fully shielded, with the shield connected to the metal housing at the transducer end and terminated in a drain wire at the termination or user end. The shield should always be terminated to a good earth ground, unless the transducer is installed in an area where galvanic corrosion is known to be a serious problem.

Lightning Protection

Lightning and surge protection for VDC, SDI-12 and 4-20 mA output are available. This is achieved through the use of 2 protectors, one is integral to the transducer housing and one is provided for the outside line located at the surface and grounded to a DIN-Rail. Please remember this option must be factory installed at the time of order entry or as a factory upgrade. **This option cannot be installed in the field.** Lightning protection is also available for unit only. Contact customer service for details.

Featuring quick response and low clamping voltages, these devices protect against fast rising voltage transients as well as severe current surges associated with lightning discharges up to 20,000 amperes. Following a surge, the protector automatically restores the line to normal operation and awaits the next surge without having to reset a breaker or replace a fuse. The power supply needs to be limited to 150 mA to avoid lock up of the gas tube after a suppression event. **Transducers installed with this option have a lifetime warranty *against damage due to voltage surge***.

Please note: When using the lightning protection option on 4-20 mA products, users should take into account the additional series resistance of this option when selecting the loop power supply. This option will increase total loop resistance by 88 Ohms.

½" Male NPT Conduit Fitting

Submersible level transducers can be attached to a rigid conduit and the cable run through the conduit. To achieve this, all of our submersible transducers can be fitted with an optional ½" NPT male conduit fitting (specify "Electrical Connection Option 4" when ordering) where the cable exits the transducer. This fitting can be mated to a standard rigid conduit.

Electrical Outputs

We offer the industry standard 0-5 VDC and 4-20 mA outputs. In addition we also offer a variety of voltage output ranges.

Reverse Signal Output

For some applications, it is important to know how far the water is from the top of the tank or the surface of the ground. If specified by the customer, our factory can set the transducer so that zero pressure reads full scale electrical output and maximum pressure reads zero electrical output.

Temperature Output

A temperature output option is available for most transducers having 4-20 mA pressure output. The temperature sensor requires an excitation of 9-28 VDC and is calibrated for a temperature range of -20 to 60ºC with an accuracy of ±4ºC.

Output Option 6 (4-20mA output for -20 to 60ºC) (mA Reading x 5) - 40 = Temperature ºC

Example:	Reading is 20mA	(20 x 5) - 40 = 60ºC
	Reading is 12mA	(12 x 5) - 40 = 20ºC
	Reading is 4mA	(4 x 5) - 40 = -20ºC

Cable Hanger

We can supply an optional cable hanger (P/N 12-90-0931) to help end users secure the cable. The cable hanger can be positioned anywhere on the cable by pushing the ends together. Once positioned, the cable hanger expands and provides a snug grip on the cable.

When mounting the transducer in a well casing, the cable hanger can be secured to a hook on the well plate or an eye bolt may be attached to the side of the well casing. The cable hanger loop is then secured to the eye bolt by using any number of types of fasteners. A similar technique can be used when working in stilling wells for surface water level measurement. In this case, the loop-end of the cable hanger can be attached directly to a screw or bolt bored into the still well shelf.

Submersible Cable Splicing Kit

Our field-installable cable splice kit (P/N 830) allows you to splice polyurethane and ETFE submersible cable. It is most commonly used for well applications where the more expensive ETFE cable is required for suspension in corrosive media where the liquid level is fairly shallow, but the well is hundreds of feet in depth. It is also used in emergency situations where cable must be spliced together to get an application up and running.

3.0 Installation & Maintenance Tips

WARNING: POTENTIAL ELECTROSTATIC CHARGING HAZARD

In hazardous locations:

- **Avoid building up static charge on case of data protector and plastic accessories.**
- **Use damp rag to wipe data protector and plastic accessories to avoid static build up.**

General Installation Procedures

The following is important installation and preventive maintenance information. Our Customer Service or Applications Engineering Support staff can provide additional instruction.

1. **Transducer Anchors:** Most users either suspend our submersible transducers in stilling wells or attach them to rigid conduit. This is done to prevent damage to the transducer from shock caused by water turbulence. It is not advisable to tie your transducer to a pump or to piping, as any problem with the transducer could require that the pump be pulled from the installation. This could prove to be *very expensive*. (Please refer to the Cable Anchoring Schemes drawing in **Appendix A**.)

   Some applications use our optional bracket (P/N 49-06-00PC) to clamp the transducer to a fixed object (i.e., wall, ladder, step) or require the unit to be suspended without any protective still well or attachment device. In all installations, care should be taken to ensure no damage occurs to the cable.

2. **Transducer Submersion:** Damage to submersible cable is one of the most frequent causes of transducer failure. Lower your transducer into the liquid slowly, making sure the cable does not drag over sharp edges and only to the depth necessary. Avoid dropping the unit from the surface. This does not apply to Series 27, 28, and 30 transducers.

3. **SuperDry™ Vent Filter (Desiccant) or Aneroid Bellows Installation** (For submersible transducers vented gage pressure format only) ***Always*** install a desiccant vent filter or aneroid bellows immediately after transducer installation**.** Failure to use one or the other could result in premature failure of the transducer; which would not be covered by warranty. If you use a desiccant filter, you should establish a regular maintenance schedule. You should change your vent filter when it is 75% spent (pink color). Replacement filters are available at a nominal cost from the factory. Do not remove the old vent filter until a new one is available. The most common failure mode of our transducers is moisture and corrosion damage due to lack of use or maintenance of the vent filter. This will allow air into the desiccant filter and allows the transducer to properly vent with changes in barometric pressure.

   To install/replace either the aneroid bellows or the vent filter, simply unplug the old unit from the vent tube and plug the 0.062" x 1" stainless steel connector tube (supplied with each filter or bellows) into the vent tube. (Installation and mounting instructions are supplied with each aneroid bellows and vent filter.) The diagram on page 16 shows typical vent filter and aneroid bellows hookups.

4. **Cable Protection** An inexpensive way to protect the cable from damage is to order the submersible pressure transducer with a ½" conduit attachment. Connect an inexpensive flexible 5/8" garden hose to the ½" conduit fitting with an equally inexpensive female PVC ½" NPT x 3/4" NHT swivel fitting, available at your local hardware store

5. **Bending of Cable** Our polyurethane and ETFE jacketed cables are quite flexible. Care needs to be taken to ensure that when bending the cable to suit your installation you do not crimp the vent tube inside the cable. Consequently, do not bend the cable more than a radius of 1 inch.

6. **Cable Compression** Many users require a compression fitting to secure our ETFE and polyurethane jacketed cable as it enters a junction box. Care needs to be taken that you do not over-tighten the fitting so as to damage the cable.

7. **4-20 mA Wiring** When connecting a 2-wire 4-20 mA transducer to a typical power supply and mA meter, verify that the meter has an input impedance of at least 10 Ohms. If you are unsure of the input impedance, then a 10 Ohm resistor may be placed in series with the meter and transducer. Connect the + (red) lead of the transducer to the + terminal of the power supply. If the 10 Ohm resistor is required, connect it to the - (black) lead of the transducer. Use a short length of 22 AWG or heavier wire to connect the + terminal of the meter to the resistor (if it is required) or the - (black) wire of the transducer. Connect the - terminal of the meter to the - terminal of the power supply with a length of 22 AWG or heavier wire. Connect the drain wire from the transducer to a good earth ground. (See **Appendix**, page **14** for wiring diagram.) Please refer to "**Maximum Cable Lengths and Minimum Supply Voltage**" in **Appendix C**, page **22** to verify minimum loop supply voltage requirements.

8. **VDC Wiring** To connect a 3 wire VDC output transducer to a typical power supply and the voltmeter, connect the - terminal of the power supply to the - input terminal of the meter with a length of 22 AWG or heavier wire. Connect the - excitation (black) lead of the transducer to the - input terminal of the meter. Connect the + input terminal of the meter to the signal lead (white) of the transducer. Connect the + terminal of the power supply to the + lead (red) of the transducer. Connect the drain wire to a good earth ground. (See **Appendix A**, **page 14**.)

9. **The Model 750** comes standard with a field removable diaphragm protector (one-inch or 25 mm standoff). The diaphragm protector can easily be taken off by removing six (6) fasteners located on the bottom of the unit.

10. **Sealed-Gage Transducer Configured For Altitude Above Sea Level** Since sealed-gauge transducers are normally calibrated at sea level, there may be considerable error induced when used at a higher elevation. If the transducer was calibrated without taking into consideration the difference in atmospheric pressure at sea level and the higher elevation, an offset error will occur. In order to eliminate error due to this difference, the customer must identify the elevation where the transducer will be installed. The nominal atmospheric pressure at the location is calculated and the transducer will be ranged accordingly. Not all KPSI Transducers are available in a sealed pressure format. Please refer to the appropriate datasheet for availability.

11. **Position Sensitivity** The transducer should be installed so that the diaphragm located behind the nose cap is oriented in a vertical position, otherwise the unit could exhibit an offset.

General Maintenance Tips for Submersible Transducers

1. **Desiccant Maintenance**

WARNING: POTENTIAL ELECTROSTATIC CHARGING HAZARD

In hazardous locations:

- **Avoid building up static charge on case of data protector and plastic accessories.**
- **Use damp rag to wipe data protector and plastic accessories to avoid static build up.**

If you use a desiccant vent filter, you should establish a regular maintenance schedule. You should change your vent filter when it is 75% spent (pink color). Replacement filters are available at a nominal cost from the factory. Do not remove the old vent filter until a new one is available. Remember that Pressure Systems' improved 810 SuperDry™ Vent Filter are designed to be effective for at least one year before requiring replacement.

2. **Clogged Nose Piece or Dirty Diaphragm**

Either of these conditions could result in erroneous readings from your transducer.

WARNING: NEVER attempt to clean your transducer's nose piece or diaphragm with any object. This will dent the sensor diaphragm and cause permanent damage to the transducer.

Your transducer may be cleaned in accordance with the procedures listed in step 4, below.

3. **Cleaning your transducer**

Materials required:

- Plastic bowls 8-12 inches (200-300 mm) in diameter and 4-6 inches (100 - 150 mm) deep
- Supply of clean, lint-free cleaning rags
- 32 ounce bottle of "The Works-Tub and Shower Cleaner" (a mild detergent) manufactured by Lime-O-Sol Company in Ashley, IN 46705 and available locally through Wal-Mart, K-Mart, Target, and Ace Hardware stores at $2 to $4 per bottle

Preparation: Prior to cleaning your pressure transducer, ensure that all procedures have been followed in the proper cleaning of the cable and transducer to remove any hazardous materials. The vent filter (or bellows) must be properly attached. The cable should be coiled to ensure ease of handling and it must be protected against the possibility of accidental abrasion and/or penetration of the cable jacket by sharp objects. A lead length of 1 to 1 ½ feet (0.3 - 0.45 m) of cable from the transducer should be allowed to facilitate handling during cleaning. The protective covering (or similar protective device) that is shipped with each transducer should be attached to the transducer at all times. It should only be removed prior to installation or cleaning.

Your work surface needs to be clean and free of clutter and large enough to accommodate all materials required in addition to the transducer and cable. Fill one of the bowls with fresh water, one with a mild detergent mixed with water and the last with 16 ounces (0.45 kg) of "The Works".

Cleaning:

Step 1: Holding the cable 6 inches (150 mm) from the transducer, immerse the unit in the bowl containing the mild detergent and stir for 20-30 seconds. Remove and rinse in the bowl containing the fresh water, using the same stirring motion used in the mild detergent. Rinse and wipe dry.

Step 2: Holding the body of the transducer with one hand so that you are looking at the retaining screen protecting the sensor, carefully remove the sensor nose piece by simply unscrewing it from the transducer body. *Do not touch the sensor diaphragm with your finger or any other object. Also, do not try to dry the inside portion of the transducer, as you risk damaging the pressure sensor*.

Step 3: Place the transducer in a vertical position with the sensing end facing downward in the bowl containing "The Works" solution for approximately 15-20 seconds. Rinse in the bowl containing clean water and wipe dry the external casing only. Place the protective screen in the same solution for 15-20 seconds, rinse and wipe dry.

Step 4: Holding the transducer in a vertical position so that you can see the face of the sensor, screw the protective nose piece back into place.

4. Cleaning the Lightning Protection Data Line Protector

WARNING: POTENTIAL ELECTROSTATIC CHARGING HAZARD

In hazardous locations:

- **Avoid building up static charge on case of data protector and plastic accessories.**
- **Use damp rag to wipe data protector and plastic accessories to avoid static build up.**

4.0 Warranty and Product Return Procedure

Any transducer/transmitter that is less than 2 years old (see DOM) which does not meet the product's specifications and exhibits **no obvious physical damage to the housing, sensor, or cable (cuts),** will be replaced under warranty.

Units 2-3 years old: Units that fall within this age group and exhibit no obvious physical damage to the housing, sensor, or cable (cuts), may be replaced at a discounted list price.

Units greater than 3 years old: Units that fall within this age group are not replaced under warranty.

Merchandise Return Procedures

Contact the **Applications Support Group** or the **Customer Service Department** at Pressure Systems if your transducer is not operating properly. Our staff is available for troubleshooting at **(757) 865-1243** or toll free at **1-800-328-3665** during normal working hours, Eastern time. If your transducer or accessory needs to be returned to Pressure Systems, obtain a *Returned Merchandise Authorization* (RMA) from the Customer Service Department prior to shipment. Be prepared to supply the following information when requesting the RMA:

- Part number
- Serial number
- Complete description of problems/symptoms
- **Bill To** and **Ship To** address
- Purchase order number (not required for warranty repairs)
- Customer contact and telephone number

The above information, including the RMA number, must be on the customer's shipping documents that accompany the equipment to be repaired. Pressure Systems also requests that the outside of the shipping container be labeled with the RMA number to assist in tracking the repairs. All equipment should be sent to the following address:

ATTN: KPSI TRANSDUCER REPAIR DEPARTMENT (7-digit RMA number)
Pressure Systems, Inc.
34 Research Drive
Hampton, Virginia 23666

Prior to returning to Pressure Systems, the transducer and cable must be cleaned per instructions provided on the cleaning certificate supplied when the transducer was delivered. The certificate can also be found on Pressure Systems website:

www.PressureSystems.com/cleaning.html

The completed certificate must accompany the transducer when shipped to Pressure Systems. If the transducer has been used in media other than potable water, PSI customer service must be notified at the same time an RMA number is requested. PSI reserves the right to reject any shipment deemed to be unsanitary or environmentally unsafe to handle. If these guidelines are not met, the package will be sent back unopened and at the customer's expense. ***Please***

include the attached vent filter or aneroid bellow with each returned vented gage submersible transducer.

Pressure Systems will return warranty items prepaid via UPS GROUND. If the customer desires another method of return shipment, Pressure Systems will prepay and add the shipping charges to the repair bill.

Incoming freight charges are the customer's responsibility. The customer is also responsible for shipping charges to and from Pressure Systems for all equipment not under warranty.

Once the return is received, it typically takes 5-10 working days for the technician to make a fault determination.

A cable reconnect fee will be charged when the customer requests a different length of cable.

Restocking Policy

Pressure Systems does allow standard products to be returned for credit in the event it is no longer required, providing the products are in new and unused condition. A restocking fee will be assessed depending on the model type and variety.

A **25% restocking fee** applies to the following models, providing they are vented-gage reference format and [pressure ranges above 3 psig (20 kPa) and below 100 psig (690 kPa)].

27	320	700	710
28	342	705	720
Display Meters - all models			750

A **50% restocking fee** applies to the following models. This also applies to all other models with sealed-gage and absolute pressure formats as well as vented-gage reference formats with [pressure ranges below 3 psig (20 kPa) and above 100 psig (690 kPa)].

30	335
300DS	730
330	735

NOTE: Expedite premiums and shipping charges are non-refundable.

Please consult the individual manuals for the Series 500 and Series 550 (waterMONITOR) for the restocking policy.

This page intentionally left blank.

Appendix A

Drawings and Diagrams

Wiring Diagram VDC, mA, and Temp Output 14
Cable Anchoring Schemes 15
Reference Connection Schemes 16
Submersible Cable Termination 17

Wiring Diagram VDC, mA, and Temp Output

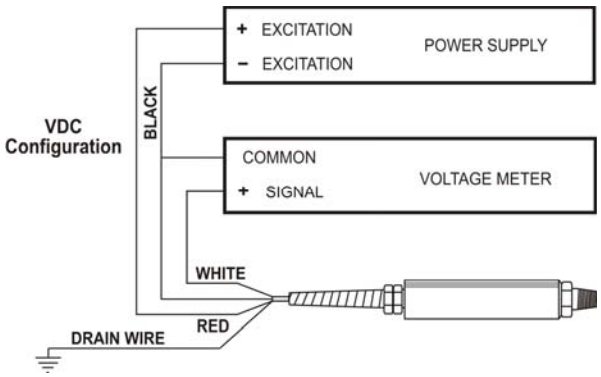

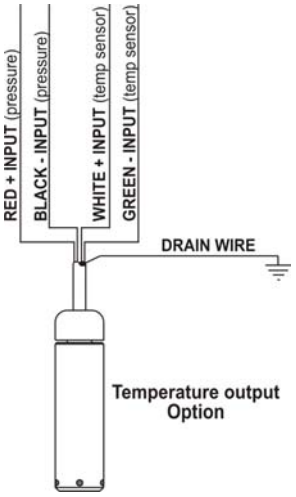

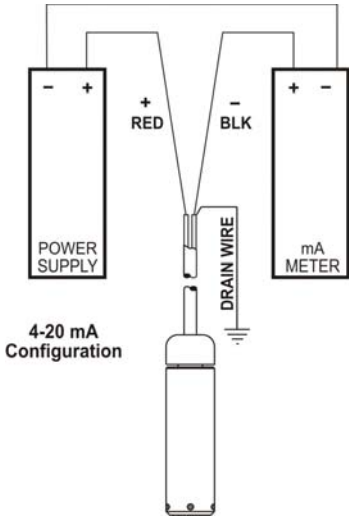

Notes:

1. These diagrams depict typical installations. Refer to your power supply and instrumentation Manufacturer for the specifics of your application.

Cable Anchoring Schemes

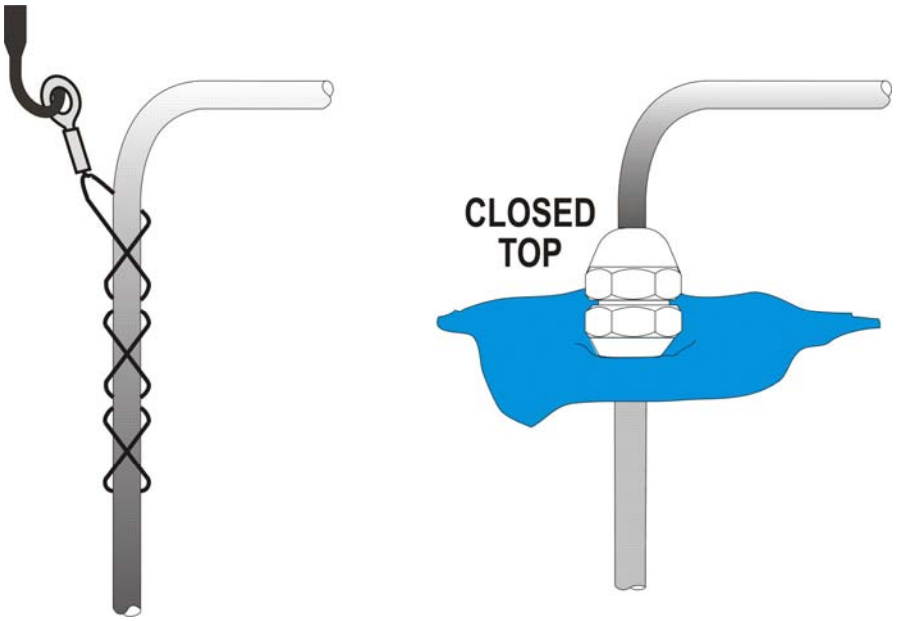

Reference Connection Schemes

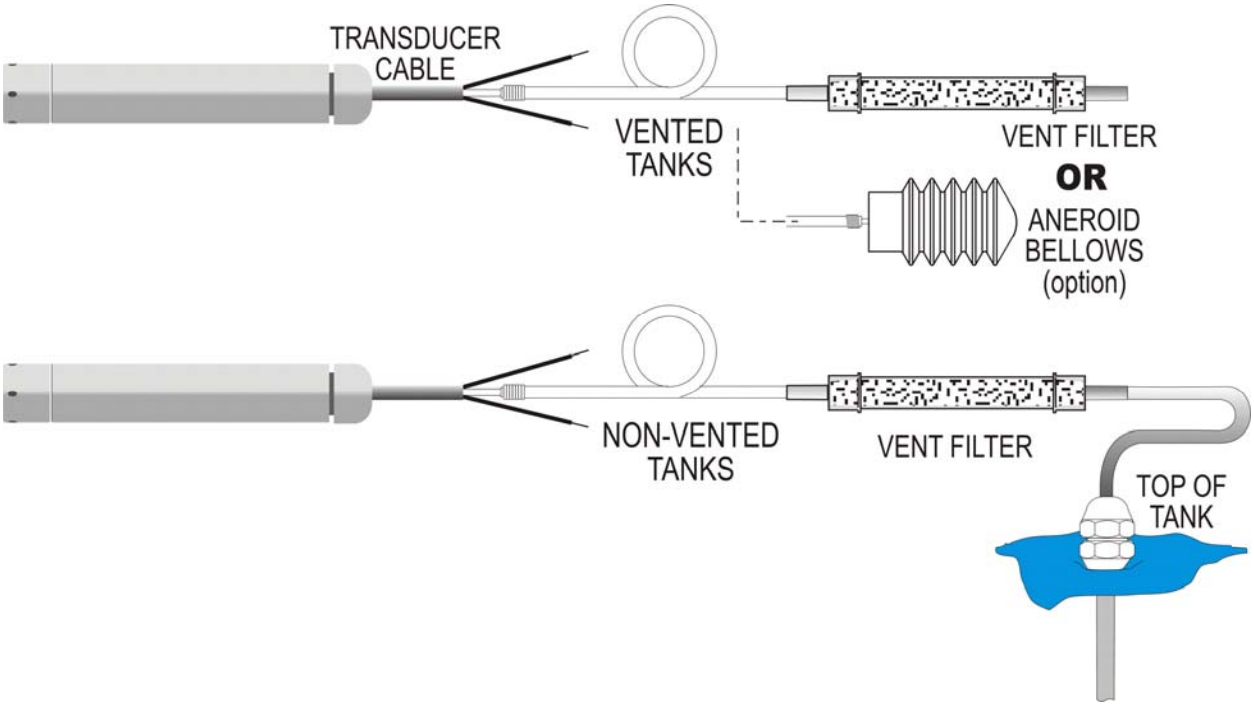

Submersible Cable Termination

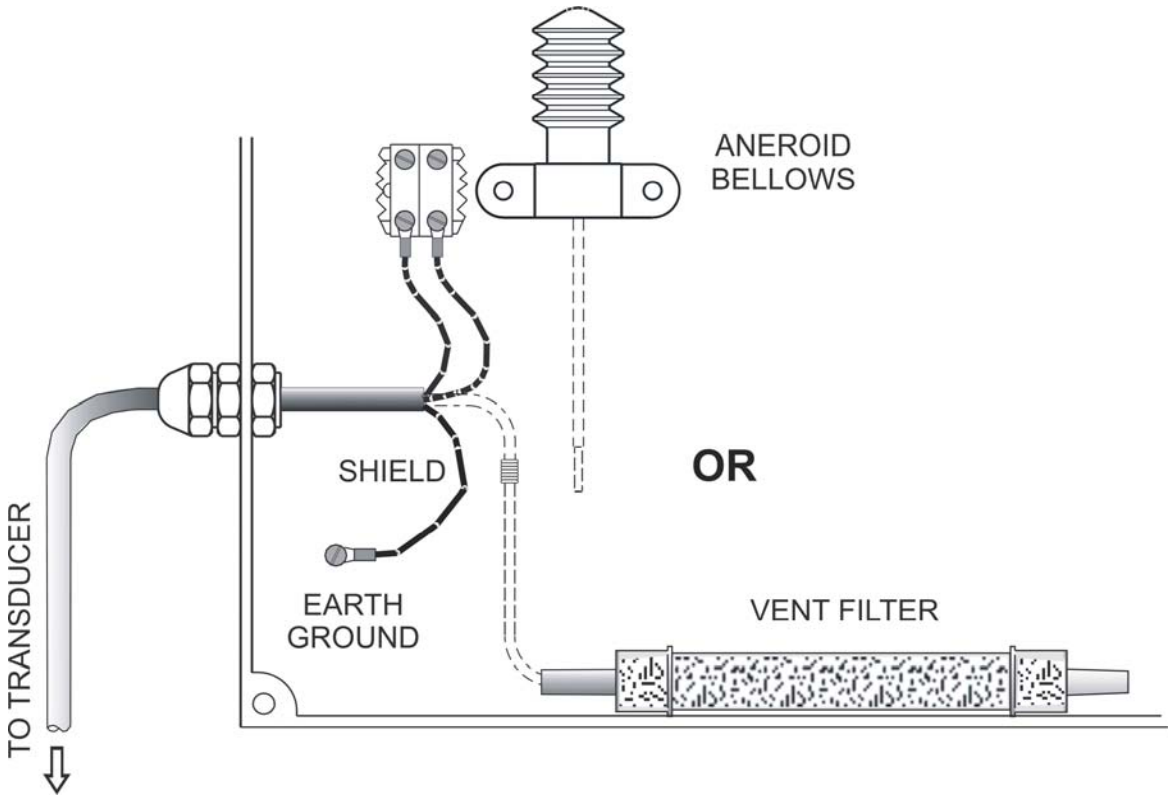

Appendix B

1. Question: What installation ideas do you have to help me get rid of electrical noise interfering with the signal?

Answer: An ounce of prevention goes a long way. Either try to eliminate the source of noise or move the transducer as far away from it as possible. We strongly encourage you to secure our cable shield to a good earth ground and that you use a 4-20 mA signal output. Armed with these precautions and the fact that many of our transducers are CE approved for electromagnetic interference, you should have few problems.

2. Question: The cable on the submersible transducer always seems to get cut and damaged. What am I doing wrong?

Answer: This is the most common problem that our users encounter. Make sure that all of your colleagues and staff understand the importance of handling the cable with care. The cable should not be bent around rough or sharp edges. Always use a cable reel during transport. Where possible, suspend the unit in a perforated 2" (50 mm) PVC pipe and thread the cable through protective conduit to the nearest junction box.

3. Question: I have an application where the transducer is frequently damaged by voltage spikes. What can be done to prevent this?

Answer: At a minimum, make sure the cable shield is connected to an earth ground as near as possible to the transducer. We can provide a surge protection kit for both our submersible and non-submersible transducers. See page 4. These kits will handle typical spikes that might come in through the power lines as well as surges that travel through the ground due to nearby lightning strikes

4. Question: How much impact shock can your submersible transducers withstand?

Answer: Our transducers are not shock tested and the lower pressure ranges can be damaged if dropped from several feet onto an unforgiving surface like concrete. We recommend that the protective shipping foam remain in place until the unit is installed.

5. Question: What is the response time of your transducer?

Answer: From initial power up, the transducer output will stabilize within a fraction of a second. The frequency response is rather low, probably less than 1 kHz, but it depends on the application, the media, plumbing, etc. Call our factory for application assistance if frequency response is critical in your application.

6. Question: How do I attach your vent filter or aneroid bellows to my cable vent tube?

Answer: The vent filter can be mounted anywhere convenient, preferably out of the weather. It can be mounted in any position and connects to the cable vent tube via the extension tube with metal connector tube provided. The aneroid bellows must be mounted in a way that its movement is not encumbered. It is provided with a mounting base.

7. Question: What is the best way to mark my cable?

Answer: Use white vinyl marking tape available from your local hardware or electronic stores. These same stores may also sell cable marking kits.

8. Question: Any ideas for preventing marine growth on your submersible transducers?

Answer: You might want to try waterproof grease. Remove the threaded nose cap to facilitate applying the grease**. Take care not to damage the diaphragm when applying the grease and not to trap air bubbles against the sensing diaphragm.**

9. Question: How many measurements can you make before the diaphragm on the sensor fails?

Answer: In normal operation - millions of cycles. We find that sensor failure is rarely due to diaphragm fatigue.

10. Question: What is the turnaround time on repairs?

Answer: Once we receive a unit into our facility it takes less than 10 working days to complete an evaluation.

11. Question: What is the longest length of cable you have attached to a submersible transducer?

Answer: Two thousand feet (610 meters).

12. Question: Why do you use 316 SS housings and sensors for your standard transducers?

Answer: It offers a good combination of corrosion resistance and reasonable cost. As an option, we do offer titanium for more aggressive environments.

13. Question: What wire gauge should I limit myself to when connecting to your 22 AWG wire?

Answer: Use 22 AWG or heavier.

14. Question: Does it make any difference if I mount the transducer in a vertical or horizontal position?

Answer: Yes. Our units will experience a certain amount of position sensitivity. You should mount it in a vertical position throughout the measurement cycle. If you lay the transducer down, the user must realize than an offset will occur.

15. Question: What happens when you freeze your transducer in a column of water?

Answer: We have frozen our transducers in a container of water in a home freezer, with no resulting damage. However, depending on the level range of the unit, over pressure of the unit is possible. In harsh environments where debris is common and ice shifts, you might expect damage to both the transducer and cable.

16. Question: Why would I choose a KPSI Transducer versus a competitor?

Answer: Reliable, long lasting products
Rapid delivery
Lightning protection lifetime warranty
Excellent pre & post sales/application support
No hassle service

Appendix C

Troubleshooting Techniques

Quick Check Procedure

The following is a quick field checkout procedure for KPSI Level and Pressure Transducers. It will be referred to throughout the troubleshooting section.

Should a problem be encountered with a transducer or transmitter, it is sometimes helpful to test the transducer independently from the rest of the system, thereby establishing where to concentrate the troubleshooting effort.

On the next page is a simple hookup diagram for the most common types of electrical output, a 0-5 VDC transducer and a 4-20 mA transmitter. In either case, the "power supply" can be a common 12 volt lantern battery, or even a 9 volt transistor radio battery, although the lifetime of a 9 volt battery will be limited. The meter should be a digital type capable of reading at least 2 digits to the right of the decimal point. Use 22 gage or heavier hookup wire or clip leads for jumpers. If your unit has other than a 0-5 VDC or 4-20 mA output, please call Applications Support at **(800) 328-3665** for assistance.

Once your transducer is correctly configured per one of the diagrams below, orient the transducer in a vertical position with the pressure port down and then read the zero output on your meter. For a 0-5 VDC output, the zero should be between 0 and 0.10 volts, and for a 4-20 mA output, between 3.80 and 4.20 mA. For Series 300, the values do not change for VDC output but the values for mA are between 3.80 and 4.20 mA. If the output is outside of these limits, you may, at your option, choose to troubleshoot the transducer per the suggested measurements shown below. Otherwise, contact our Customer Service Department at **(800) 328-3665** for a Return Material Authorization number (RMA).

If the zero output is within these limits, the problem will more than likely be found elsewhere in your system.

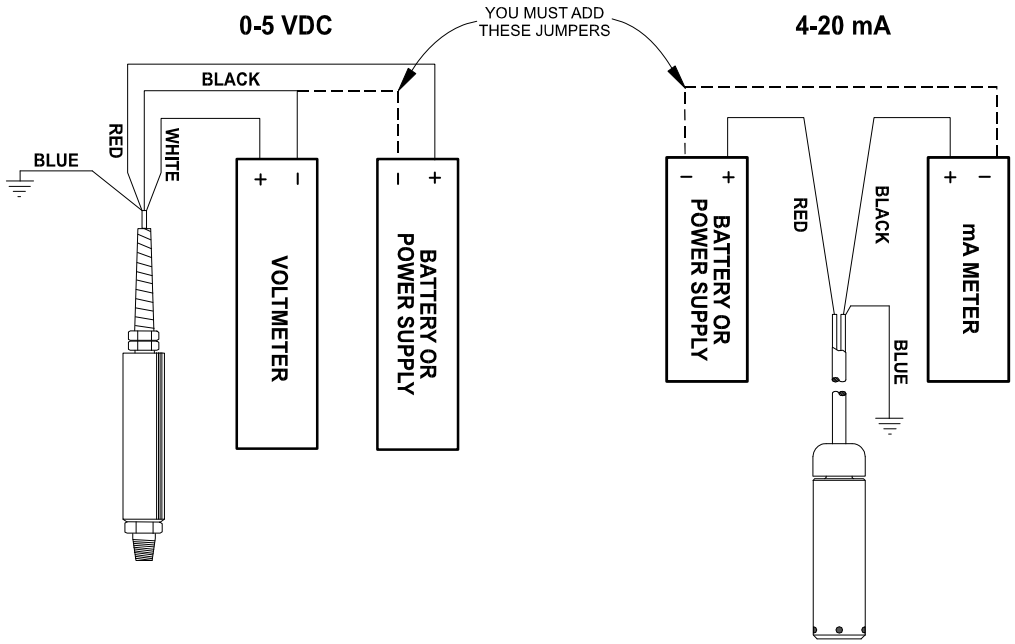

When an error is observed at a customer's installation, it is important to determine if the fault lies in the transducer or the instrument reading the transducer signal, ie. digital panel meter, programmable logic controller, etc. . To do this, a second instrument should be used to confirm the observations. The second instrument may be a handheld DMM (Digital Multi-Meter) or a dedicated milliammeter capable of reading 4-20 mA of current to a resolution of at least 0.1 mA. The diagram above illustrates the attachment of the meter in series with the black (negative signal) wire of the transducer using a 9-28 VDC power supply for transducer excitation. Some suggested power supplies are:

- 1 - 12 VDC automotive battery.
- 2 - 6 VDC lantern batteries connected in series (for a total of 12 VDC).
- 2 - 9 VDC transistor batteries connected in series (for a total of 18 VDC).

Batteries are suggested to power the transducer during testing to eliminate the possibility that line noise is passing through an improperly filtered, grounded, or damaged power supply. All measurements should be recorded and sent to Pressure Systems along with the transducer to assist in the evaluation process.

Further Measurements:

0-5 VDC	Should read:	4-20 mA	Should read:
+Excitation (white) to Shield (drain)	> 2.5 Mohms	+Excitation (red) to Shield (drain)	> 2.5 Mohms
-Excitation (black) to Shield (drain)	> 2.5 Mohms	-Excitation (black) to Shield (drain)	> 2.5 Mohms
+Output (red) to Shield (drain)	> 2.5 Mohms	Shield (drain) to Housing	< 2 ohms
Shield (blue) to Housing	< 2 ohms		

Maximum Cable Lengths and Minimum Supply Voltage

The maximum length of cable to be used with our submersible transducers is largely dependent upon the type of electrical output of the transducer. For a 0-5 VDC output, a maximum cable length of 100 feet (30 m) is recommended. A voltage output is more susceptible to electrical interference than a 4-20 mA signal. A 4-20 mA signal can be transmitted much longer distances, depending upon such factors as temperature, wire size, length of the wire, power supply, and voltage requirements of any devices to be powered. At 25ºC the 22 AWG conducting copper wire used in our polyurethane jacketed cable has a resistance of 16.45 ohms per 1000 feet (304 m).

Using Ohms Law (E=IR) where E=voltage, I=current and R =resistance, one finds that a 20 mA signal requires .329 volts to drive it along 1000 feet (304 m) of 22 AWG copper wire (E=16.45 x .020). This drop is seen on both the supply and return wire for a total loop voltage drop of 0.658 volts

To find out how much voltage is required to drive our Series 700 submersible level transducer's 4-20 mA signal 10,000 feet, just add the minimum power requirement of the 700 (9 VDC) to the resistance offered by 10,000 feet (3048 m) of our polyurethane jacketed cable (10,000÷1000 x .658=6.58). The resulting power requirement is 15.58 VDC (9 + 6.58).

Connect the cable shield (drain wire) to a good earth ground. This will protect the transducer from relatively minor transient voltages. The only exception to this rule is if high rates of electrolytic corrosion have been previously experienced with grounded submersible devices. In this case it may be better to leave the shield disconnected.

Please note: When using products with the lightning protection option on 4-20 mA products, users should take into account the additional series resistance of this option when selecting the loop power supply. This option will increase total loop resistance by 88 Ohms.

Troubleshooting Techniques

1. Symptom: ***Transducer fails to give output of any kind.***

Procedure: Isolate the problem to either the transducer or the power supply/readout. See the Quick Check Procedures (above) for this check. If it can be determined that the transducer is no longer operable, remove it from service for further analysis. If the transducer output falls within the limits described above, the fault lies somewhere else in your system.

2. Symptom: ***Transducer has failed and has been removed for analysis.***

Procedure: Inspect the cable for physical damage. Cuts in the cable jacket can result in liquid incursion into the transducer housing, which can cause permanent damage. If operational, the cable can be repaired by using a splice kit (P/N 830) supplied by Pressure Systems.

Inspect the transducer housing. It should be intact and free of corrosion. If the outer surface of the transducer is pitted, this could be an indication of galvanic corrosion caused by stray ground currents. If this is the case, the transducer will probably require replacement. If the external case exhibits none of these characteristics, carefully unscrew the nosepiece and look into the pressure sensing end of the transducer. The concentric rings of the sensing diaphragm should be visible. If they are not, it could be that residue has accumulated on the diaphragm, preventing it from responding properly to pressure changes. The transducer can be cleaned by gently swishing the transducer back and forth in a bucket of warm, soapy water until the residue softens and washes off. (See **Cleaning Your Transducer**, page 8.) ***Under no circumstances should any object or tool be used to remove residue from the sensing diaphragm or else permanent damage will be done.*** If cleaning the diaphragm does not solve the problem, the transducer should be returned to the factory for repair or replacement.

3. Symptom: ***Transducer develops a negative offset and gets worse over time (actual level exceeds specified level).***

Procedure: This may be a sign that moisture has entered the reference (vent) tube in the cable and is inside the transducer housing. This is usually the result of not maintaining the desiccant vent filter or of operating the transducer without a desiccant filter or aneroid bellows. If caught early enough, the transducer can be saved by coiling the cable and transducer in a pan and baking it in an oven at 50°C (122°F) for a minimum of 2 hours. *Be careful that the oven temperature does not exceed 50ºC (122°F)* or both the transducer and the cable can be damaged. **Alternatively**, suspend both the cable and transducer in a vertical position (with vent tube down), overnight to allow water to drain from the transducer and vent tube.

4. Symptom: ***Transducer suddenly fails during or just after a nearby lightning event.***

Procedure: This failure is usually caused by overvoltage due to ground transients resulting from a direct or indirect lightning event. These transients can travel

distances of a mile or more. The transducer may be returned to the factory for repair and optional retrofit of our ***lightning protection system.*** This system carries a lifetime warranty against transducer damage due to lightning.

5. Symptom: ***Transducer response to pressure/level input changes becomes sluggish.***

Procedure: This is usually a sign that the sensing end of the transducer has become fouled with residue. The transducer must be removed from service and the sensing diaphragm cleaned as described in Item 2, (warm, soapy water). If fouling persists, the transducer may be replaced with a Series 705 or Series 750 (non-fouling) transducer, which is specifically designed for trouble-free operation in a high residue environment.

6. Symptom: ***Output reading is within limits but "freezes" at one point.***

Procedure: In certain environments "crust" may form over the sensing diaphragm, preventing the sensor from identifying change in level. Removing the transducer from service and cleaning it (as described in Item 2) will generally solve the problem. To combat marine growth, you might try wrapping the transducer with copper wire similar to that found in wire scouring pads for cleaning dishes. Marine growth occurs on the copper and eventually erodes the copper and drops off or the copper is manually removed during routine maintenance. Alternatively, there are various companies that will impregnate/coat the 316 stainless steel with anti-fouling chemicals of coatings. Level transducers temporarily removed from the well or sump should not be stored dry, but should be stored in a bucket of fresh water in order to prevent "crust" formation.

7. Symptom: ***Readings increase very slowly over time***.

Procedure: Our cable is shipped coiled and consequently takes time to straighten when installed. Attaching a weight to the transducer (e.g., one of our sacrificial anodes) will help. To prevent cable stretch with lengths greater than 200 feet (60 m), secure the Kevlar fibers (just under the cable jacket) to your junction box or other secure object.

8. Symptom: ***No electrical output from your transducer.***

Procedure: Check all electrical connections to ensure they are correct and secure. Double check your power supply or use a battery (as described previously) to ensure the transducer is getting power. If all checks OK, the problem could be a circuit board or the sensor in your transducer. The unit must be returned to the factory for evaluation. The most probable cause of this type of failure is damage to the submersible cable jacket allowing water to leak down the cable and into the transducer housing or lightning damage.

9. Symptom: ***Formation of marine growth on a submersible transducer.***

Procedure: Certain transducer construction materials, for example, 316 stainless steel, attract marine life (snails) and algae. Clean the transducer diaphragm by

soaking it in a bucket of warm water with a non-aggressive cleaning solution. You can also coat the transducer with marine grease. This may be the most effective and inexpensive way to protect your transducer.

10. Symptom: ***Submersible transducer exhibits corrosion or pitting on body or diaphragm***

Procedure: Dissimilar metals (for example, your transducer housing and your pump housing) in an electrolytic environment (fluid in your well) can lead to *galvanic corrosion* of the metal that is nearer the anodic end of the galvanic series. Likewise, a voltage potential between the ground wire of the transducer and the ground of other equipment in the well can lead to *galvanic corrosion*. Installation of a P/N 820 or 825 sacrificial anode will help protect your transducer from *galvanic corrosion*. Our sacrificial anodes are made of a zinc alloy that, being nearer the anodic end of the galvanic series than the 316 stainless steel or titanium housing of the transducer, will corrode before the transducer.

11. Symptom: ***The transducer is buried in dirt or silt and the readings seem to be erroneous.***

Procedure: Use of a piezometer nosepiece in this application would help. This nosepiece can be easily installed in the field and features a very fine screen to keep dirt from fouling the diaphragm, but allows the diaphragm to sense moisture levels.

12. Symptom: ***Transducer has an offset error.***

Procedure: Our submersible transducers perform best when the sensing end is pointing in a downward manner. Keep in mind that you can experience offset error due to the position sensitivity or orientation change of the sensor. Offset errors are more prominent in low pressure applications with the sensing end of the transducer lying flat or pointing upward.

13. Symptom: ***I am testing a Series 700 4-20mA sensor for use with our data logger. On page A-2 of the KPSI Level and Pressure Transducers User's Manual, I see the standard 4-20mA configuration. Does the recording channel of my data logger become the mA meter?***

Procedure: Most data loggers cannot measure current (mA) directly. When this is the case a load resistor must be used to convert the current (mA) output into an appropriate voltage. If the User's Manual for your particular instrument does not illustrate a preferred method for recording current (mA) data then you should attach your transducer signal wires to your data logger in the following manner.

Transducer red wire - Data Logger Excitation Terminal
(The minimum excitation for a Series 700 Transducer is 9VDC)
Transducer black wire – Data Logger signal input (+) terminal

Attach a Load resistor between the Data Logger signal input (+) terminal and the Data Logger signal input (-) terminal.

Attach a separate piece of wire between the Data Logger signal input (-) and analog ground.

In this configuration you will turn your data logger into a milliammeter. The size of your load resistor can be calculated in the following manner.

D/0.02=R

Where:

Data logger input range = D
Full scale output of transducer = 0.02 A (20 mA)
Load Resistor Value = R

Pick an appropriate standard value

250 Ohms results in 1 to 5 VDC at 4 and 20 mADC
125 Ohms results in 0.5 to 2.5 VDC (500 to 2500 mVDC) at 4 and 20 mADC

At this point the discussion needs to address IR loss (voltage drop) in series circuits. Note that Series 700 transducers need a minimum of 9 VDC to operate correctly. When the transducer is operating correctly it will output a current which, when driven through a resistor, will generate some amount of voltage drop. If the resistor value is 250 Ohms then the voltage measured across that resistor will be 0.004 A * 250 Ohms = 1.000 VDC and 0.020 A * 250 Ohms = 5 VDC. Notice that, if the available voltage from the data logger is12 VDC then 12 VDC - 5 VDC = 7 VDC which is less than the voltage required by the transducer to operate. If this scenario were to occur the transducer would actually stop functioning correctly when its output reached 12 mADC (50% of transducer full scale range). In this case the appropriate choice for a load resistor value is 125 Ohms.

14. Symptom: ***I have a Series 700 4-20mA transducer rated for 7.5 PSIG attached to a pressure source that is outputting 7.5 PSIG. With 20VDC being supplied I am getting 19.94 mA. I can't find the upper range allowance for the sensor, but this seems low to me. Does this mA reading fall into the acceptable range for the transducer with the settings I've specified?***

Procedure: When evaluating a transducer it is sometimes convenient to make some broad generalizations in order to rapidly determine the condition of the unit. In general, transducers that output a 4-20 mADC signal have a 16 mADC span (4 - 20 = 16). If the transducers accuracy is reported as being some percentage of its full-scale range then the following table could be used in conjunction with the instructional notations to determine whether a more detailed analysis of data quality is required.

Model	Accuracy	Accuracy in mADC
700	1.00%FS	±0.16 ma
710	0.50%FS	±0.08 ma
720	0.25%FS	±0.05 ma
730	0.10%FS	±0.016 ma
735	0.05%FS	±0.008 ma

In order to approximately determine how many milliamps a transducer should output at a given depth.

1. Determine the depth (in feet) at which the transducer is sited.
2. Divide the depth value (from step 1) by the transducer full-scale range (in feet). - Record the value.
3. Multiply the value calculated in step 2 by 16 (the transducer span in milliamps).
4. Add 4 to the product of step 3. This is the approximate value in milliamps that should be output by the transducer at its current depth.

In order to approximately determine the depth of a transducer (in feet) using a given value of milliamps.

1. Divide the full-scale range of the transducer (in feet) by 16. Record this value.
2. Subtract 4 from the milliamp output of the transducer. Record this value
3. Multiply the result of step one by the result of step 2. This is the approximate depth at which the transducer is sited.

If the resulting numbers are reasonably close to some verified value for current water depth, then the unit is functioning. In order to determine the quality of measurement, additional steps need to be performed.

Appendix D

Calibration Calculations

Pressure Systems ships a calibration sheet with every KPSI™ Transducer. This sheet lists the actual values that were output by the transducer, when it was being manufactured, at several different pressures. In addition, two coefficients are provided that can be used to calculate the actual depth from any given mA output value. These coefficients are derived from a Least Squares Best Fit Straight Line (BFSL) calibration using the data listed on the datasheet. Our accuracy specification is referenced to the line described by the BFSL coefficients and so the transducer may not output exactly 4 mADC at zero pressure and 20 mADC at full-scale. As an example here is an example of data for a typical transducer.

Calibration Report

Test Date: 02/28/08
Test Time: 13:02:57
Model No: 320T14B0A008.670000.000B10030B
Serial No: 0802048
Pressure Range: 0.00 to 8.67 PSIG
Excitation: 9-28 VDC
Output: 4-20 mA

Test Temps: ROOM = 25.3 DegC

PCU Serial No: TRF048

Target Test Pressure	BFSL Rm Temp Outputs	Run #1 Rm Temp Outputs	Run #1 Error %FSO	Run #2 Rm Temp Outputs	Run #2 Error %FSO
0.00	4.0017	3.9995	-0.0134	3.9981	-0.0222
1.73	7.2050	7.2003	-0.0295	7.2066	0.0098
3.47	10.4096	10.4111	0.0091	10.4144	0.0297
5.20	13.6133	13.6182	0.0305	13.6207	0.0461
6.94	16.8176	16.8158	-0.0114	16.8174	-0.0014
8.67	20.0219	20.0173	-0.0290	20.0190	-0.0184
6.94	16.8171	16.8162	-0.0057	16.8172	0.0006
5.20	13.6127	13.6176	0.0305	13.6175	0.0299
3.47	10.4083	10.4131	0.0298	10.4110	0.0167
1.73	7.2049	7.2067	0.0115	7.2059	0.0065
0.00	4.0020	4.0001	-0.0118	4.0000	-0.0124

Maximum Static Error: 0.0523 %FSO
Maximum Non-repeatability: -0.0393 %FSO

Electrical termination: RED: +SUPPLY
BLACK: -SUPPLY
BLUE: SHIELD

Slope1: 0.5411 PSIG/mA
Zero Offset1: 0.0000 PSIG

Slope2: 1.8479 mA/PSIG
Zero Offset2: 4.0017 mA

Conversion Factor: 1.0000

Notes:

Calculations:

Method 1: Calculate pressure in desired units, using sensor's output as independent variable.
PSIG = 0.5411(mA - 4.0017) + 0.0000

Method 2: Calculate predicted sensor output in desired units using pressure as the independent variable.
mA = 1.8479(PSIG - 0.0000) + 4.0017

In this case, even though the offset or 0 PSIG output was 4.0017 mADC and the full-scale point was 20.0219 mADC the unit actually performed better than its specified accuracy of ±0.25% of full-scale range as indicated in the Error % FS column.

The calculation for pressure is illustrated below:

PSIG = (Span*Output (in mA)) + Offset

And, to convert to feet of water

Feet H_2O = PSIG * 2.3073

measurement
SPECIALTIES
34 Research Drive, Hampton, VA 23666 USA
757-865-1243, Toll Free 800-328-3665
Fax 757-865-8744
E-mail sales@PressureSystems.com
www.PressureSystems.com
online orders www.LevelandPressure.com

OPERATION AND MAINTENANCE MANUAL

(1) MODEL 10 GRANULAR ACTIVATED CARBON ADSORPTION SYSTEM

FOR

KIRTLAND AFB ALBUQUERQUE, NM

SOLD TO: TECHSAS, INC.
BACLIFF, TX

PREPARED BY
CALGON CARBON CORPORATION
MOON TOWNSHIP, PA

CALGON CARBON PROJECT NUMBER: **CTO.150010.KRTAF**
CUSTOMER PURCHASE ORDER NUMBER: **560245**
DATE: OCTOBER, 2016

THIS MANUAL IS THE PROPERTY OF CALGON CARBON CORPORATION AND IS NOT TO BE REPRODUCED IN WHOLE OR PART, NOR EMPLOYED FOR ANY PURPOSE OTHER THAN SPECIFICALLY PERMITTED IN WRITING BY CALGON CARBON CORPORATION.

SAFETY DEPENDS ON YOU

Calgon Carbon Corporation's equipment is designed and built with safety in mind. However, proper installation and operation can increase your overall safety.

DO NOT INSTALL, OPERATE OR REPAIR THIS EQUIPMENT WITHOUT READING THIS MANUAL AND THE SAFETY PRECAUTIONS CONTAINED THROUGHOUT.

BE SURE THAT ALL INSTALLATION, OPERATION, MAINTENANCE AND REPAIR PROCEDURES ARE PERFORMED ONLY BY QUALIFIED INDIVIDUALS.

SAFETY HIGHLIGHTS

READ AND UNDERSTAND THE FOLLOWING SAFETY HIGHLIGHTS.

⚠ WARNING

This statement appears where the information must be followed exactly to avoid serious personal injury or loss of life

⚠ CAUTION

This statement appears where the information must be followed exactly to avoid minor personal injury or damage to equipment.

QUESTIONS, TROUBLESHOOTING, SPARE PARTS

Call Calgon Carbon Corporation at 1-800-422-7266

CALGON CARBON CORPORATION ♦ COPYRIGHT 2016 ♦ ALL RIGHTS RESERVED

TABLE OF CONTENTS

SECTION 1 SYSTEM DESCRIPTION

1.1. Introduction
1.2. Model 10 Specifications and Operating Conditions
1.3. General System Description

SECTION 2 INSTALLATION

2.1. Introduction
2.2. Foundations
2.3. Equipment Installation
2.4. General Handling and Lifting Instructions
2.5. Recommended Unloading and Placement Procedures

SECTION 3 OPERATION

3.1. Pre-Operation Check-Out
3.2. Filling An Adsorber With Carbon
3.3. Wetting (Deaerating The Carbon)
3.4. Backwashing and Backflushing
  3.4.1 Backwash / Backflush – General
  3.4.2 Backwashing An Adsorber
  3.4.3 Re-Starting System After Backwashing
3.5. Start-Up
  3.5.1 Series Flow
  3.5.2 Parallel Flow
3.6. Steady State Operation
  3.6.1 Monitoring
  3.6.2 Valve Operation
  3.6.3 Adsorber Sequencing – V-214A Lead, V-214B Lag
  3.6.4 Adsorber Sequencing – Taking Adsorber V-214A Off-Line
  3.6.5 Adsorber Sequencing – V-214A Back On-Line as the Lag Vessel
  3.6.6 Adsorber Sequencing – Taking Adsorber V-214B Off-Line
  3.6.7 Adsorber Sequencing – V-214B Back On-Line as the Lag Vessel
  3.6.8 Adsorber Sequencing – Adsorber Sequencing – Parallel Operation
3.7. Shutdown
  3.7.1 Short Term Shutdowns
  3.7.2 Extended Shutdowns
3.8. Troubleshooting Guide

CALGON CARBON CORPORATION ♦ COPYRIGHT 2016 ♦ ALL RIGHTS RESERVED

SECTION 4 CARBON TRANSFER PROCEDURE

4.1. Standard Trailer
4.2. Site Requirements
4.3. Spent Carbon Transfer to Trailer
4.3.1 Spent Carbon Transfer
4.3.2 Drain Water From Trailer
4.4. Fresh Carbon Transfer From Trailer
4.4.1. Fill The Trailer With Water
4.4.2. Transfer Carbon To Adsorber

SECTION 5 GENERAL INFORMATION

5.1. Maintenance
5.2. Safety Considerations
5.2.1. Oxygen Deficiency Due To Activated Carbon
5.2.2 Emergency Procedures
5.2.3. Pressure Relief Warning
5.3. Record Keeping

SECTION 6 ACTIVATED CARBON / ADSORPTION INFORMATION

6.1. Adsorption
6.2. Activated Carbon And How It Works
6.3. Factors Affecting Adsorption
6.4. Additional Adsorption Theory
6.5. Glossary

SECTION 7 CARBON DATA

- Activated Carbon Product Bulletin/Specifications
- Safety Data Sheet

CALGON CARBON CORPORATION ♦ COPYRIGHT 2016 ♦ ALL RIGHTS RESERVED

SECTION 8 OPERATING INFORMATION

Figure 1 – Vessel V-214A to V-214B Series Flow
Figure 2 – Vessel V-214B On-Line Vessel V-214A Carbon Transfer
Figure 3 – Series Flow Vessel V-214B to V-214A
Figure 4 – Vessel V-214A On-Line Vessel V-214B Carbon Transfer
Figure 5 – Parallel Flow Vessel V-214A and V-214B
Figure 6 – Vessel V-214B On-Line Vessel V-214A Backwashing
Figure 7 – Vessel V-214A On-Line Vessel V-214B Backwashing
Figure 8 – Calgon Carbon Standard Trailer
Figure 9 – Calgon Carbon Triple Compartment Trailer
Carbon Acceptance Canister Instructions
Spare Parts Program
Warranty
Video Agreement

- Model 10 Pressure Drop Curve – Series & Backwash
- Curve: Rate Of Wetting Versus Time For Granular Activated Carbon
- Curve: Percent Bed Expansion
- Application Bulletin: Disinfection Of Granular Activated Carbon
- ASME Section VIII - U1A Forms

SECTION 9 SPECIFICATIONS AND CATALOG CUT SHEETS

SECTION 10 SHIPPING SPECIFICATION

SECTION 11 DRAWINGS

SECTION 1

SYSTEM DESCRIPTION

SECTION 1

SYSTEM DESCRIPTION

1.1 INTRODUCTION

This manual covers a general description and operating procedures for a Model 10 Granular Carbon Adsorption System. This system is designed to treat liquid streams containing organic compounds amenable to adsorption using Calgon Carbon Corporation's granular activated carbon products. If the guidelines in this manual are read and followed carefully, the system can be operated efficiently and safely with minimal operating expense.

The recommended operating practices set forth in this manual are patterned to suit normal operating conditions. Different conditions may require modifications of these operating practices. Since varying operating conditions or problems may arise over long-term operation, the skill and judgment of the operating personnel should be exercised when needed.

This manual should be available to operating personnel and engineers so that the operating instructions are followed. Operators should record all operating data and maintenance work (overhauls, repairs, etc.) in an operator's logbook. Only trained personnel should operate the system and perform maintenance. If further information beyond what is contained in this manual is required, please contact the nearest Calgon Carbon Corporation regional sales office for assistance.

1.2 MODEL 10 SPECIFICATIONS AND OPERATING CONDITIONS

1. Adsorber Vessel Specifications:

- For Adsorber Vessel Specifications refer to Vessel Arrangement Drawing found in Section 11.
- For System Pressure Drop refer to the Pressure Drop Curve found in Section 8.

BACKWASHING INFORMATION:

Bed Expansion: 25%

- For Backwash Expansion Rates refer to the Bed Expansion Curve found in Section 8.

CALGON CARBON CORPORATION ♦ COPYRIGHT 2016 ♦ ALL RIGHTS RESERVED

2. System Weights and Dimensions (Approximate):

- For System Weights and Dimensions refer to the General Arrangement Drawing found in Section 11.

3. Vessel Accessories/Piping

Piping:

Process Piping:	8" Sch. 40 Carbon Steel
Carbon Transfer Piping:	4" Sch. 40 Carbon Steel (fill)
	4" PPL Lined Carbon Steel (discharge)
Backwash Piping:	8" Sch. 40 Carbon Steel

VESSEL NOZZLES	NUMBER	SIZE	FLANGE TYPE
Side Manway	1	20"	150#F.F.
Top Manway	1	14"x18"	Elliptical F.F.
Process In	1	8"	150# F.F.
Process Out	1	8"	150# F.F.
Carbon Inlet/Vent	1	4"	150# F.F.
Carbon Outlet	1	4"	150# F.F.
BW In			At Process Outlet
BW Out			At Process Inlet
Air Release	1	2”	150# F.F.
Sample Taps	3	2"	150# F.F.

Pressure Relief:

Pressure Relief Device:	Rupture Disk
Rupture Disk Material of Construction:	Graphite
Rupture Disk Stamped Burst Pressure:	125 psig
Rupture Disk Recommended Operating Ratio:	80%
Recommended Maximum Inlet Pressure:	100 psig

4. Carbon

Carbon Type:	OLC AW
Mesh Size:	12 x 40
Initial Fill:	40,000 Lbs. (Quantity per System)
Quantity per vessel:	20,000 Lbs.

CALGON CARBON CORPORATION ♦ COPYRIGHT 2016 ♦ ALL RIGHTS RESERVED

5. Materials of Construction List

WETTED CONTINUOUSLY		
ITEM	CCC SPECIFICATION NUMBER	MATERIAL OF CONSTRUCTION
Process and Carbon Fill Piping	C2 --	Sch. 40 Carbon Steel Pipe Cast Iron Fittings EPDM Gaskets
Process Valves	FLOWLINE	Ductile Iron Body Nylon Coated Ductile Iron Disk 416 Stainless Steel Shaft EPDM Seat
Carbon Discharge Piping	L1	PPL Lined Steel PPL Lined Cast Iron Fittings
Carbon Exchange Valves	4.08	316SS Body, Ball and Stem TFE Seats and Seals
Instrument and Flush Connection Piping	C13 S6	Sch. 40 Galvanized Carbon Steel 316 SS Tube and Fittings
Instrument and Flush Connection Valves	4.03	Bronze/Brass Body, Ball and Stem TFE Seats and Seals
Pressure Gauges	PI-217	316SS Bourdon Tube 316SS Connection
Rupture Disks	PSE-577	Graphite
Expansion Joints	24.06	Neoprene
Vessel Lining	VS7	Plasite 4110 Vinyl Ester
Vessel Manway Gaskets	G46	EPDM, Off-White
Underdrain Materials	22.106	Polypropylene Septa Ivory Rubber Gasket Polypropylene Expanding Ring
Basket Strainer	22.53	316 SS
Air/Vacuum Release	Crispin	AL Series
Vent and Sample Piping	S15	316 SS Pipe and Fittings
WETTED INTERMITTENTLY OR FOR SHORT TIME PERIODS		
Quick Connect Couplings	32.40 32.60	Malleable iron Aluminum

CALGON CARBON CORPORATION ♦ COPYRIGHT 2016 ♦ ALL RIGHTS RESERVED

6. Carbon Delivery

	STANDARD TRAILER (15 PSIG HOPPER)	MULTI COMPARTMENT TRAILER
Carbon (Lbs-dry):	20,000 (dry)	20,000 For GAC exchange 40,000 initial fill
Utility Requirements: Air (SCFM): (PSIG): Water (GPM): (PSIG):	 100 100 (**) 100 --	 100 100 (**) 100 --
Water Required to Fill Trailer (Gallons): Dry Carbon: Pre-Wetted Carbon:	 5,000 4,200	Compartment End Center 2,800 5,000 2,500 4,200
Height Clearance (Ft):	13	14
Overall Length: approx.	57’	62’
Empty Weight (Lbs):	32,000	37,000
Filled Weight (Lbs): Dry Carbon: Wet Carbon (Before Drain): (After Drain):	 52,000 94,000 72,000	For GAC Exchange 57,000 99,000 77,000

(*) Unloading accomplished with eductor
(**) Regulated down to 15 psig max.

1.3 GENERAL SYSTEM DESCRIPTION

The Model 10 Adsorption System is a unit consisting of two (2) vertical pressure vessels, each containing 20,000 pounds of granular activated carbon (total of 40,000 pounds per system). The vessels are complete with underdrain. Process piping and carbon transfer piping is shipped loose for installation in the field. The adsorber vessels are free-standing vessels, with the central piping assembly preassembled.

After connecting the influent and effluent piping to the system, the vessels may be operated in a series or parallel configuration.

Granular activated carbon will be delivered to the site in Calgon Carbon Corporation's bulk trailers for unloading directly as a water slurry into an empty adsorber.

CALGON CARBON CORPORATION ♦ COPYRIGHT 2016 ♦ ALL RIGHTS RESERVED

The stream to be treated is pumped to the adsorption system at a flow rate compatible with the design capacity of the unit. The adsorption system is operated in a downflow mode with the granular carbon beds in a series or parallel configuration.

In a series system, flow is directed into the top of the first vessel (lead adsorber) and flows down through the carbon. From the bottom of the lead adsorber, the stream flows into the top of the second adsorber (polish adsorber). Effluent from the polish vessel flows into the effluent line for discharge to a point determined by the client.

Initially, the impurities are adsorbed onto the carbon in the upper portion of the lead bed. As this top layer of carbon becomes saturated, adsorption takes place lower in the bed. Eventually all the carbon in the lead adsorber becomes saturated and the contaminant concentration of the effluent from the adsorber increases until it approaches or equals the influent concentration.

When the carbon in a vessel is exhausted, an empty trailer is sent to the site to remove the load of spent carbon. Pending completion of carbon acceptance by Calgon Carbon, the carbon will be returned to one of our plant sites for thermal reactivation.

The spent carbon is transferred from the adsorber to the bulk trailer by first filling the adsorber with water. The adsorber is then pressurized using compressed air as the motive force to facilitate the carbon transfer to the trailer.

Once the spent carbon transfer operation is completed, a charge of fresh carbon can be transferred into the empty adsorber. This is accomplished by filling the bulk trailer with water and placing a water cushion in the adsorber. The bulk trailer is then pressurized with compressed air to facilitate the carbon transfer into the adsorber.

In series operation, when the lead bed is taken out of service, flow may be directed to the polish adsorber (now the lead bed) for uninterrupted operation. After the first adsorber is emptied and then filled with fresh carbon, it can be placed on-stream in the polish position. At this point, the second adsorber becomes the lead bed of the two-stage operation. Series operation achieves the most efficient use of the carbon.

In parallel operation, the influent flow is directed to both vessels through a common inlet line. When contaminant breakthrough is detected from one or both vessels, the system is shut down for carbon replacement. If breakthrough occurs from only one bed, it is possible for the other adsorber to remain on-stream at its normal or a slightly higher flow rate. However, this is normally not done and both carbon beds are replaced. Parallel operation is used in situations where the carbon usage rate is low, the mass transfer zone is short, and/or two stage operations is not required.

CALGON CARBON CORPORATION ♦ COPYRIGHT 2016 ♦ ALL RIGHTS RESERVED

After start-up, records should be kept of pertinent data such as flow rate, pressure drop across each bed, total dissolved solids, temperature, pH, and/or specific performance requirements such as toxicity, BOD, COD, and TOC organic contaminant levels.

CALGON CARBON CORPORATION ♦ COPYRIGHT 2016 ♦ ALL RIGHTS RESERVED

SECTION 2

INSTALLATION

SECTION 2

INSTALLATION

2.1 INTRODUCTION

This section describes the offloading and installation of the modular carbon system. In addition to the instructions below, refer to the Shipping Specification included with this manual for instruction on shipping and handling of large adsorber systems.

2.2 FOUNDATIONS

The equipment can be set on a permanent or temporary foundation. A temporary foundation could be a steel skid or plate, paved area or concrete foundation to which the adsorber vessels can be secured. Any foundation, either temporary or permanent, must be adequate to support the operating weight of the unit. See the Calgon Carbon Corporation general arrangement drawing for the dimensions and weights of the system.

Before installation of a permanent system, the adsorber tanks should be oriented on the foundation to ensure that the inlet and outlet opening and anchor lugs are positioned properly. Anchoring can be installed either in the foundation or at time of vessel installation, provided local codes or regulations are satisfied. The outline of the adsorbers should be marked on the foundation.

2.3 EQUIPMENT INSTALLATION

A crane is required to off-load the vessels and piping skid. Lifting lugs are provided on all the vessels. A properly trained and experienced rigging crew should be employed to set the equipment. The vessels should be set on the foundation in a level position and be anchored as required by local codes and seismic regulations. Each vessel must be individually set.

1. The following instructions are typical for large modular adsorber systems. Refer to the project drawings for specific details; i.e. dimensions, weights and pipe sizes.
2. Before the equipment is shipped, a site visit is recommended to review specific site conditions that may affect delivery or installation. Special note should be made for:
    - Overhead clearances – power lines, trees, plant piping
    - Access to site – fences, trees, locations within neighborhood or plant
    - Soil conditions – Can the delivery truck get close to the installation site?
    - Foundations – Properly cured? Correct size to accept new system?

CALGON CARBON CORPORATION ♦ COPYRIGHT 2016 ♦ ALL RIGHTS RESERVED

3. Receive adsorption equipment in accordance with plant site requirements. Typically, one truck is used to ship the equipment. Shipment is normally comprised of the following items:

   - (2) Adsorber Vessels; Refer to project specific drawings for exact vessel dimensions and weight.
   - (12) Prefabricated pipe spools.
   - (1) Crate of hardware; Containing bolts, gaskets, pipe supports and u-bolts, gages etc.
   - (1) Valve Rack; Refer to the following table for the weight of a pipe rack.

Pipe Size	Weight
6”	2,800 lbs.
8”	3,900 lbs.
10”	6,300 lbs.

   Refer to the project drawings and material list enclosed in the crate for a comprehensive account of components provided for the particular job being installed.

4. Off load the equipment from truck to the pre-prepared mounting location. Set equipment on properly formulated foundation ensuring weight loading, anchor bolt depth, smooth level surface and adequate dimension for equipment footprint. For recommended lifting procedures refer to the section titled Lifting & Handling Guidelines.

5. The following installation steps can be accomplished in utilizing a crane for one day. Refer to the installation drawing, Figure 1, for generalized details and the project drawings for more specific details.
   - Set one vessel in proper location on the foundation
   - Position valve rack at the estimated point of hook-up. Make sure that vessel and valve rack are set true and level to plan.
   - Align the effluent nozzle on the bottom head, the effluent pipe, and rubber expansion joint with the appropriate valve rack connection.
   - Bolt-up snug when alignment is satisfactory.
   - Align the influent piping to the designated valve rack connection and connect expansion joint piping with tank nozzle on the top of the vessel, and bolt-up snuggly.
   - Attach all pipe bracket supports and u-bolts as provided.
   - When it is determined that complete line up is acceptable finish bolting both effluent and influent lines.
   - Set the second vessel into position and line up second vessel with valve rack and effluent/influent piping as previously described.
   - When accomplished finish the bolt-up.

CALGON CARBON CORPORATION ♦ COPYRIGHT 2016 ♦ ALL RIGHTS RESERVED

- When completely satisfied with installation bolt vessels to foundation using predetermined anchor bolt hardware.
- Connect (1) carbon fill, and (1) carbon discharge line to each vessel.
- Install the vessel sample ports and connecting hardware as detailed on the project drawings.
- Mount pressure gauges and instruments as shown on project drawings.
- Install the Carbon Acceptance Canister.
- If equipment is supplied with an electrical panel, run power feed to the panel and make connections per the interconnection drawing.

6. The customer should connect from the connections on the pipe rack; influent, effluent, backwash supply and backwash outlet, to the plant supply piping. Gaskets and bolts supplied by the customer.
   Client supplied effluent piping for the adsorption system should include an anti-siphon loop or adequate backpressure to ensure that the water level in the vessels covers the media during operation.

   The pressure relief discharges to the backwash outlet/vent line. The backwash outlet/vent line should have unrestricted flow to atmosphere.

7. Each vessel has underdrain nozzles pre-installed by CCC. For internal underdrains; ring type and internal cones, the septa should be checked for tightness before the manway covers are closed and secured.

8. The system is now ready for hydro testing and disinfection as required.

2.4 GENERAL HANDLING AND LIFTING INSTRUCTIONS

The recommended lift points are shown on the installation drawing; lifting lugs on vessel top head, vessel leg anchor base plates and location shown on the valve rack.

1. Always make lift attachments to the designated lift points when using chains or cables. Never lift using a vessel nozzle.
2. Operators of hoisting and moving equipment must follow proper rigging procedures at all times.
3. Always lift - NEVER roll or slide equipment.
4. When moving equipment, do not drop or allow hard impact. Do not allow cables, hooks, or spanner bars to swing against or slide over the vessel.
5. Never allow tools to strike or drop on equipment (especially inside or outside of vessels).
6. Never allow bare metal chains or cable to slide against the metal surface of equipment causing marring, deformation or serious defects in the metal.

CALGON CARBON CORPORATION ♦ COPYRIGHT 2016 ♦ ALL RIGHTS RESERVED

7. Avoid temporarily bracing vessels or equipment with metal structures, wood is acceptable for this application. Avoid striking vessel with tools or instruments of any kind.
8. All ladders used inside vessels shall have ends protected. Ladders shall have rubber protectors to prevent damaging the lining.
9. Workmen entering a lined vessel must wear soft-soled shoes, free of grit. Workmen must follow plant and OSHA requirements for confined space entry.

2.5 RECOMMENDED UNLOADING AND PLACEMENT PROCEDURES (REFER TO SHIPPING SPECIFICATION VS13)

1. Vessel and miscellaneous equipment unloading shall be accomplished in such a manner as to avoid damage to finished surfaces. Adequate padding may be necessary around the lifting point. Wooden chalks and crating should be carefully removed where necessary.
2. Utilize chains, nylon slings, or a spreader bar for hoisting vessels. The angle between the lifting point and the top of the equipment must always be 60° or greater. Workmen shall keep control over the vessel with guidelines. No metal rigging may come in contact with the vessel except for specifically designed lift points or lifting lugs.
3. A crane is required to off-load, move and hoist into position the vessels and piping assemblies. Lift points are provided on all pieces. A properly trained and experienced rigging crew shall be employed to set the equipment. The equipment shall be set on a solid foundation, made level as possible and anchored as required by local codes and seismic regulations. Each vessel must be individually set.
4. Piping connection points to vessels and valve rack shall be free of mechanical stress. Do not force pipe connections to these points for damage can result.
5. Follow safe anchor bolt installation practices.
6. Dirt marks shall be cleaned from the surface of all Equipment upon completion of the installation. Marred paint resulting on Vessels and all equipment pieces shall be touched up with a paint of comparable color and quality. More severe damage requires appropriate surface cleaning and preparation before primer and finishing paint are applied.

CALGON CARBON CORPORATION ♦ COPYRIGHT 2016 ♦ ALL RIGHTS RESERVED

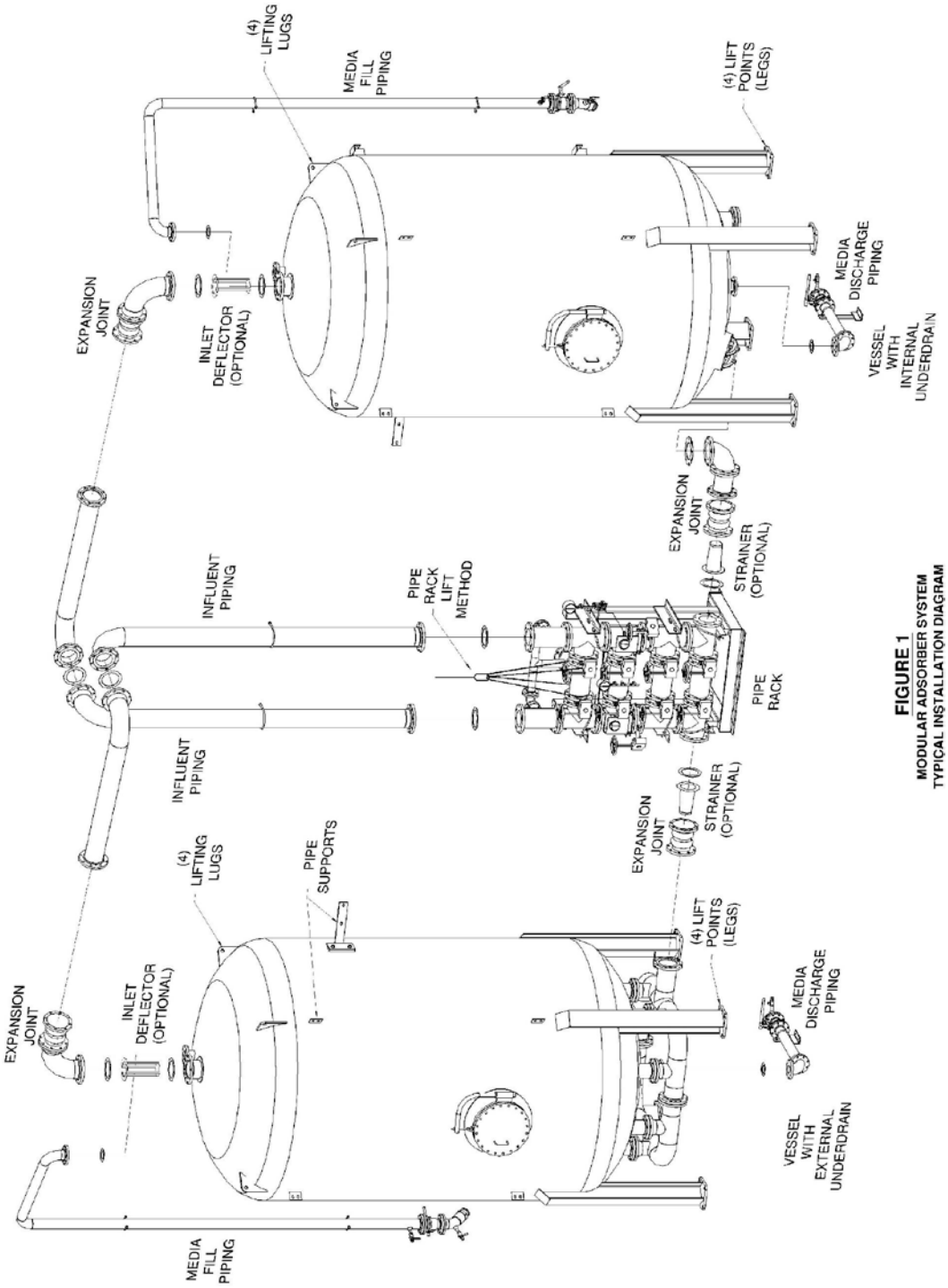

FIGURE 1
MODULAR ADSORBER SYSTEM
TYPICAL INSTALLATION DIAGRAM

SECTION 3

OPERATION

SECTION 3

OPERATION

3.1 PRE-OPERATION CHECK-OUT

All equipment and systems affiliated with the granular carbon adsorption system such as pumps, filters, etc. should be checked out according to the manufacturer's instructions. Specific activities to complete before operating the adsorption equipment should include the following:

1. Check all piping connections for proper installation and tightness.
2. Ensure that all gauges and instruments are functional and installed correctly. Re-zero or re-calibrate if necessary.
3. Close all valves in the adsorber piping system.
4. Install the carbon acceptance canister (if provided) after checking to ensure it is filled with carbon.

For potable water treatment installations, the client will be responsible for cleaning and disinfecting the vessels and piping prior to filling the system with carbon. The procedures to complete this step in the installation process are the responsibility of the client.

3.2 FILLING AN ADSORBER WITH CARBON

After the system has been checked, the adsorbers are ready to be filled with granular activated carbon. The carbon is transferred to the adsorbers as water slurry from Calgon Carbon trailers. The detailed procedures for making the transfer are given in Section 4.

The trailer driver connects the necessary hoses and operates all the valves on the trailer. A plant operator should be available to operate the valves on the adsorber system.

After all the carbon is transferred from the trailer, the driver disconnects the hoses and closes the valves on the trailer. The plant operator closes the valves in the vent and carbon fill lines on the adsorber. The adsorber is now ready to be backwashed or backflushed.

CALGON CARBON CORPORATION ♦ COPYRIGHT 2016 ♦ ALL RIGHTS RESERVED

3.3 WETTING (DEAERATING THE CARBON)

In a typical bed of virgin carbon, the pore volume is approximately 40% of the bed volume. Carbon which is shipped dry will contain air in these pores. Therefore, the carbon must be properly wetted prior to being placed on stream. If this is not done, the air within these pores will displace into the void spaces between the carbon particles during operation and cause high pressure drop and channeling in the adsorbers. These problems can cause premature breakthrough of contaminants. Air will not migrate out of the bed during normal downflow operation.

The time required for wetting is a function of liquid temperature and viscosity. Generally, a minimum wetting period of 24 hours is required using water at ambient temperatures, although a period of up to 72 hours is preferred for complete wetting. After wetting, backwashable adsorbers should be backwashed to remove air and segregate the carbon by size.

As an alternative, the Calgon Carbon Service trailer containing fresh carbon may be filled with water and allowed to stand for several hours. When the fresh carbon is transferred to the adsorber, the adsorber should be backwashed to eliminate any remaining air.

After the carbon has been wetted, the adsorber should be drained and then backfilled until water flows out the system vent line. The adsorber should be filled up-flow at 2 gpm/ft^2 maximum. For a Model 10 System this is 150 gpm, maximum.

If the unit must be placed on-stream before the carbon has been wetted, the adsorbers should be drained and backfilled when the pressure drop becomes prohibitive or after two days of operation, whichever occurs first.

For process applications, the same procedure is required. If the process liquid cannot be diluted with water and the carbon must be wetted with the process liquid there will be a significant heat of adsorption. In this case, Calgon Carbon should be contacted for specific instructions on the method to be used for wetting.

CALGON CARBON CORPORATION ♦ COPYRIGHT 2016 ♦ ALL RIGHTS RESERVED

3.4 BACKWASHING AND BACKFLUSHING

3.4.1 BACKWASH/BACKFLUSH -- GENERAL

Backwashing and backflushing are procedures involving running clean, contaminant-free water upflow through the adsorber. Backwashing or backflushing of a carbon bed can be done after fresh carbon has been transferred into an adsorber and wetted, or during operation to remove sediment from the top of the bed.

If the adsorbers are to be backwashed during operation, they should be backwashed prior to startup. The reasons for backwashing before placing fresh carbon on-line are to:

1. Size segregate the carbon so subsequent backwashing will return the carbon to the same relative position in the bed.
2. Remove any remaining air from the bed.
3. Remove carbon fines which can, in some cases, lead to excessive pressure drop and flow restriction.

Backwashing is done during operation to remove:

1. Sediment from the top of the bed.
2. Carbon fines that may be plugging the underdrain nozzles.
3. Air that is binding the bed. The need to backwash is indicated by an increased bed pressure drop.

Backwashing an adsorber results in expanding the carbon bed, removing air, suspended solids and carbon fines and classifying the carbon particles. The backwash flow rate depends upon the carbon particle mesh size and the water temperature (refer to the bed expansion curve in Section 8). Model 10 units are designed with significant straight side height to permit 30% bed expansion, and the selected backwash rate should limit the bed expansion to a maximum of 25%.

For your system, refer to Section 1.2 for the design backwash water flow rate. Note that this rate assumes a 55˚F backwash water source. Use the bed expansion curve in Section 8 to determine a backwash rate if the water source is at a different temperature.

CALGON CARBON CORPORATION ♦ COPYRIGHT 2016 ♦ ALL RIGHTS RESERVED

In a system that is not designed for backwashing, an operation termed backflushing can be used to remove fines from the upper portion of the bed. This operation will not remove fines from the lower portion of the bed because it does not expand the bed. Expansion of the bed allows the fines at the bottom of the bed to move to the top. However, fines do not always cause high pressure drop, and their removal is not always necessary.

The backflushing rate is 2 to 3 gpm/ft^2 and this is not significant enough to expand the carbon bed. For the Model 10 adsorber this is a flow rate from 150 gpm to 225 gpm. Flow rates of less than 225 gpm will not expand the bed; therefore, size segregation of the bed will not occur. The time required for backflushing is 30 to 45 minutes.

Normally when backwashing or backflushing, a clean external water source is used. The stream should be compatible with the system and free of suspended solids and organic contaminants which might affect adsorption. If necessary, effluent from the adsorber system may be used as the water source. In this case a tank with storage capacity for 15 minutes of backwash water (20,000 gallons) will be necessary.

When normal downflow operation is started after backwashing, the initial 5 to 15 minutes of effluent flow will be dark due to a small quantity of fines. Under normal operating conditions, this condition will clear up.

3.4.2 BACKWASHING AN ADSORBER (FIGURES 6 AND 7 IN SECTION 8)

In this mode, a clean external source is used as the source for the backwash water. Note that the lead adsorber is taken out of service while the backwashing procedure takes place. It is recommended that the entire system be taken off-line to retain all process conditions. However, for continuous flow, the lag adsorber can remain on-line while the lead bed is being backwashed.

For a system operating in parallel, only the vessel needing backwashed should be taken off-line when backwashing is required.

1. Isolate the adsorber to be backwashed. If adsorber V-214A is to be backwashed, refer to Section 3.6.4 for valve sequencing. If adsorber V-214B is to be backwashed, refer to Section 3.6.6 for sequencing. If entire system is taken off-line, make sure source is turned off (i.e., pump) and all valves at system are closed.
2. Open the vent valve (V6 for adsorber V-214A, V5 for adsorber V-214B).

CALGON CARBON CORPORATION ♦ COPYRIGHT 2016 ♦ ALL RIGHTS RESERVED

3. Open the backwash water inlet valve (V8 for adsorber V-214A, V7 for adsorber V-214B) and start the backwash pump. Backwash flow should be increased to design flow gradually, avoiding water hammer.

The backwash water enters the vessel through the effluent line and flows up through the underdrain and the carbon bed. The backwash water discharge from the vent line should be observed for clarity to determine the duration of backwashing. Backwashing for high pressure drop should take approximately 10 minutes. If excessive sediment and turbidity exists in the untreated water, the backwashing times may have to be increased to 15 minutes. A fresh carbon fill should be backwashed to classify the carbon. The time required for this step is approximately 15 minutes or until the backwash discharge is free of fines.

3.4.3 RE-STARTING SYSTEM AFTER BACKWASHING

The valve sequence given below describes the steps taken to bring a system on-line after backwashing. The valve numbers refer to bringing adsorber V-214A back on-line in the lead position. Valve numbers applying to placing adsorber V-214B back in the lead position are in parentheses.

1. Close the backwash water inlet valve V8. (V7)
2. Close vent valve V6. (V5)
3. Open cross-over valves V10, V12. (V9, V11)
4. Open influent valve V2. (V1)
5. Close influent valve V1. (V2)

3.5 START-UP

3.5.1 SERIES FLOW

The adsorber system is normally operated in a series mode. Valves in the influent and effluent lines are opened or closed, as required, to set the operation of the carbon vessels in the desired configuration. The first bed in the system is called the lead bed. The second bed is referred to as the polish or lag bed.

The following sequence of steps should be followed to bring an adsorption system on-line in the series mode:

1. Check that all the valves in the adsorption system are closed.

2. Open the valve in the effluent line from the polish adsorber (V4 for adsorber V-214A, V3 for adsorber V-214B).
3. Open the valves in the cross-over line between the adsorbers (V10. V12 for V-214A in the lead position, V9, V11 for V-214B in the lead position).
4. Start the feed pump and open the valve in the pump discharge line.
5. Slowly open the valve in the influent line to the lead adsorber (V2 for adsorber V-214A, V1 for adsorber V-214B) and allow the pressure to increase to the operating level.

At this point, flow should be established downflow through both vessels and they will be on-line in series.

Set the flow rate to the system at the desired value after flow is established to the unit. The flow control meters and control instrumentation will be provided by the client as required for the system.

In order to obtain full utilization of the carbon and prevent air entrapment and channeling in the bed, the water level must remain above the carbon bed. To prevent the bed from draining due to gravity or loss of influent supply, a vacuum break (anti-siphon) loop or backpressure should be included by the client in the effluent piping. This start-up sequence assumes that an anti-siphon loop is present in the effluent piping. If no anti-siphon loop or backpressure is present, start the system by starting the pump and opening the valves in the opposite order of the sequence given previously (i.e., open the influent valve first, followed by the cross-over valves and effluent valve).

After the system is operating at steady state, water flow to the Carbon Acceptance Canister (CAC) can be started. The GAC in the canister must first be wetted, refer to Section 3.3 for wetting instructions and Section 8 for information on the carbon acceptance canister.

3.5.2 PARALLEL FLOW

The following sequence of steps should be followed to bring an adsorption system on-line in the parallel mode:

1. Check that all the valves in the adsorption system are closed.
2. Open the valves in the effluent lines from the adsorbers (V3 and V4).
3. Start the feed pump and open the valve in the pump discharge line.

4. Slowly open the valve in the influent line to one adsorber (either V1 or V2) and allow the pressure to increase to the operating level.
5. Slowly open the valve in the influent line to the other adsorber (either V1 or V2) and allow the pressure to increase to the operating level.

At this point, flow should be established downflow through both vessels and they will be on-line in parallel.

Set the flow rate to the system at the desired value after flow is established to the unit. The flow control meters and control instrumentation will be provided by the client as required for the system.

In order to obtain full utilization of the carbon and prevent air entrapment and channeling in the bed, the water level must remain above the carbon bed. To prevent the bed from draining due to gravity or loss of influent supply, a vacuum break (anti-siphon) loop or backpressure should be included by the client in the effluent piping. This start-up sequence assumes that an anti-siphon loop is present in the effluent piping. If no anti-siphon loop or backpressure is present, start the system by starting the pump and opening the valves in the opposite order of the sequence given previously (i.e., open the influent valves first, followed by the effluent valves).

For parallel operation, flow is established to each vessel by opening the valves as indicated previously. Changing the flow to one vessel may result in a flow change to the other vessel. This occurs because the vessels share a common influent and effluent line. Flow meters can be installed in the individual influent lines to each vessel to balance the flow to each unit if required.

After the system is operating at steady state, water flow to the Carbon Acceptance Canister (CAC) can be started. The GAC in the canister must first be wetted, refer to Section 3.3 for wetting instructions and Section 8 for information on the carbon acceptance canister.

CALGON CARBON CORPORATION ♦ COPYRIGHT 2016 ♦ ALL RIGHTS RESERVED

3.6 STEADY STATE OPERATION

Once flow is established to both vessels and the flow rate is set, no further adjustments are made during normal operation. The operator should establish a routine to check the adsorbers and to collect operating data. This data can be used to establish a maintenance schedule, to determine when backwashing/backflushing is necessary, or to determine when fresh carbon is needed.

3.6.1 MONITORING

Sample connections are provided on the influent and effluent lines from each vessel to take periodic samples for analysis.

Pressure gauges are provided to determine the pressure drop across each carbon bed. Taking periodic pressure readings will provide the operator with historic data for troubleshooting purposes. In the event that operating conditions change, the operator has the capability of taking corrective action.

3.6.2 VALVE OPERATION

All valves should be operated in a slow and even motion. Abrupt opening and closing of the valves can shock the system. Since complete shut-off of flow while a pump is operating could cause damage to the pump, the valves should be operated in the proper sequence in order to always maintain flow through the system. If the vessels are identified as V-214A and V-214B then the corresponding valve positions during adsorption are given as follows:

PROCESS VALVE NUMBER	SERIES V-214A TO V-214B (FIGURE 1)	V-214B SINGLE OPERATION (FIGURE 2)	SERIES V-214B TO V-214A (FIGURE 3)	V-214A SINGLE OPERATION (FIGURE 4)	PARALLEL OPERATION (FIGURE 5)
V-1	Closed	Open	Open	Closed	Open
V-2	Open	Closed	Closed	Open	Open
V-3	Open	Open	Closed	Closed	Open
V-4	Closed	Closed	Open	Open	Open
V-5	Closed	Closed	Closed	Closed	Closed
V-6	Closed	Closed	Closed	Closed	Closed
V-7	Closed	Closed	Closed	Closed	Closed
V-8	Closed	Closed	Closed	Closed	Closed
V-9	Closed	Closed	Open	Closed	Closed
V-10	Open	Closed	Closed	Closed	Closed
V11	Closed	Closed	Open	Closed	Closed
V12	Open	Closed	Closed	Closed	Closed

Refer to Section 8 for the figures referenced in this table.

Single stage operation occurs for short time periods, such as during carbon transfer or backwashing, or during other routine maintenance on one of the adsorber vessels.

NOTE: FLOW SEQUENCE CHANGES (AS DESCRIBED IN THE FOLLOWING SECTIONS) SHOULD BE PERFORMED ONLY WHEN CARBON CHANGEOUTS, BACKWASHING, OR OTHER VESSEL MAINTENANCE IS REQUIRED.

3.6.3 ADSORBER SEQUENCING: V-214A LEAD, V-214B LAG

This sequence should be used to start up the system in series mode from V-214A to V-214B. Refer to Section 3.5.1 for additional details.

Starting valve position: All valves closed.

- Open valve V3
- Open valve V10, V12
- Open valve V1, V2

At this point, flow should be established from V-214A to V-214B.

3.6.4 ADSORBER SEQUENCING: TAKING ADSORBER V-214A OFF-LINE

When adsorber V-214A is taken off-line for carbon transfer or backwashing, all of the process flow should be sent through adsorber V-214B.

Starting valve position: Series flow from V-214A to V-214B.

- Open valve V1
- Close valve V10, V12
- Close valve V2

Flow should now be established through adsorber V-214B with adsorber V-214A off-line for carbon transfer or backwashing.

CALGON CARBON CORPORATION ♦ COPYRIGHT 2016 ♦ ALL RIGHTS RESERVED

3.6.5 ADSORBER SEQUENCING: V-214A BACK ON-LINE AS LAG VESSEL

After adsorber V-214A is filled with fresh carbon, it should be placed on-line in the polish position, with adsorber V-214B moved to the lead position.

Starting valve position: Single stage flow to V-214B.

- Open valve V9, V11
- Open valve V4
- Close valve V3

Flow should now be established from adsorber V-214B into adsorber V-214A.

3.6.6 ADSORBER SEQUENCING: TAKING ADSORBER V-214B OFF-LINE

When adsorber V-214B is taken off-line for carbon transfer or backwashing, all of the process flow should be sent through adsorber V-214A.

Starting valve position: Series flow from V-214B to V-214A.

- Open valve V2
- Close valve V9, V11
- Close valve V1

Flow should now be established through adsorber V-214A with adsorber V-214B off-line for carbon transfer or backwashing.

3.6.7 ADSORBER SEQUENCING: V-214B BACK ON-LINE AS LAG VESSEL

After adsorber V-214B is filled with fresh carbon, it should be placed on-line in the polish position, with adsorber V-214A moved to the lead position.

Starting valve position: Single stage flow to V-214A.

- Open valve V10, V12
- Open valve V3
- Close valve V4

Flow should now be established from adsorber V-214A into adsorber V-214B.

CALGON CARBON CORPORATION ♦ COPYRIGHT 2016 ♦ ALL RIGHTS RESERVED

3.6.8 ADSORBER SEQUENCING: PARALLEL OPERATION

The following sequence should be used to start up the system in parallel mode. Refer to Section 3.5.2 for details.

Starting valve position: All valves closed.

- Open valves V3 and V4
- Open valves V1 and V2

Flow should now be established through the system in parallel. When carbon transfer or backwashing is required, the system should be shut down until the operation is complete.

3.7 SHUTDOWN

3.7.1 SHORT TERM SHUTDOWNS

For short duration shutdowns lasting less than one or two weeks, little needs to be done. Close all valves in the adsorber piping system, and open the vent line valves on each vessel. The feed pumps should be shut down and the valves closed in the lines to and from the pumps. Any drain valves in the pump casing should be opened for the duration of the shutdown. Freeze protection measures such as draining lines at the low points should be taken when there is a chance of freezing. Freeze protection measures are usually the responsibility of the client.

3.7.2 EXTENDED SHUTDOWNS

For extended shutdowns, in addition to the steps in Section 3.7.1, the adsorbers should be drained of all water.

When the adsorbers are started up again, the carbon beds may require disinfection. If disinfection is required, the procedures to disinfect a carbon bed can be found in Section 8 of this manual. Once the disinfection is complete, backwashable adsorbers should be backwashed prior to start-up.

After disinfection, bring the adsorber back on-line in the downflow mode, monitor the effluent for coliform count and monitor the pressure drop.

CALGON CARBON CORPORATION ♦ COPYRIGHT 2016 ♦ ALL RIGHTS RESERVED

3.8 TROUBLESHOOTING GUIDE

PROBLEM		PROBABLE CAUSE		REMEDY
High pressure drop across adsorber.	1.	Bed not flooded. Bed is air bound.	1.	Open vent valve or carbon inlet valve to release pressure. Add water upflow to fill vessel. Establish constant forward flow, then close valve.
	2.	High feed pump pressure.	2.	Throttle feed pump.
	3.	High suspended solids loading or carbon fines around the nozzles.	3.	Test feed for suspended solids. Install influent filter. Backwash/backflush the adsorber.
	4.	Improper valve settings.	4.	Check valve sequence.
	5.	Carbon in effluent strainer.	5.	Shut down system. Clean out retainer and effluent line. Remove carbon from adsorber. Inspect vessel using side manway and repair damaged underdrain in adsorber.
Carbon in the effluent.	1.	Internal mechanical (i.e. underdrain) failure.	1.	Determine which adsorber is causing the problem, then remove carbon and make repairs. In addition, inspect carbon retainer in effluent line and replace if necessary.
Leaking flange.	1.	Loose bolts.	1.	Tighten bolts.

CALGON CARBON CORPORATION ♦ COPYRIGHT 2016 ♦ ALL RIGHTS RESERVED

3.8 TROUBLESHOOTING GUIDE

PROBLEM		PROBABLE CAUSE		REMEDY
Excessive flow out vent line.	1.	Broken rupture disk.	1.	Check the following conditions before replacing disk: 1) Check downstream valving to make sure that the system is not plugged off. 2) Check feed pump pressure to make sure it is not too high. 3) Check process valve sequence. 4) Check that excessive pressure build-up did not occur in closed vessels during extended shutdowns. Once the potential source of overpressurization is removed, replace rupture disk.
Sudden high contaminant concentration in effluent.	1.	Carbon heel from improper transfer.	1.	Wait until contaminant flushes out. Review transfer procedures.
	2.	Leaking valve.	2.	Repair/replace valve.
	3.	Mass transfer zone has extended into effluent.	3.	Replace carbon.

3.8 TROUBLESHOOTING GUIDE

Problem		PROBABLE CAUSE		REMEDY
Premature breakthrough of organics in the effluent.	1.	Influent concentration change.	1.	Confirm by analyzing effluent sample(s) before changing carbon.
	2.	Air in the influent stream.	2.	Open vent valve and fill bed upflow with water as required.
	3.	Background TOC or colloids present.	3.	Change carbon.
	4.	Leaking valves.	4.	Check operation of valves in influent and effluent lines.
	5.	Incorrect valve sequence.	5.	Sequence the flow through the system properly.
Carbon heel in empty vessel.	1.	Insufficient rinse water.	1.	Provide additional rinse water flow.
	2.	Mechanical failure.	2.	Check vessel internal parts and make repairs.
	3.	Foreign material on the carbon.	3.	Rinse vessel to remove carbon.

CALGON CARBON CORPORATION ♦ COPYRIGHT 2016 ♦ ALL RIGHTS RESERVED

SECTION 4

CARBON TRANSFER PROCEDURE

SECTION 4

CARBON TRANSFER PROCEDURE

4.1 STANDARD TRAILER

The procedures that are detailed in this section of the manual are for Calgon Carbon's standard carbon trailer. Carbon may be delivered in any of two types of trailers; the standard (single compartment) trailer, or the multi compartment trailer.

The multi compartment trailer (Figure 9 in Section 8) is built to hold 10,000 pounds of carbon in each end section and 20,000 pounds in its center section. The multi compartment trailer arrives at the site with fresh carbon in the end sections. First, spent carbon is transferred to the center section of the trailer and then the fresh carbon is transferred from the end compartments to the adsorber.

In cold weather conditions, steam may be used to thaw the trailer and transfer lines if necessary. Contact Calgon Carbon for trailer steaming procedures if required.

4.2 SITE REQUIREMENTS

A flat paved area is needed to support the Calgon Carbon service trailer which may weigh up to 100,000 pounds. The overhead clearance required for the adsorption system is 13 to 14 feet. Diagrams of the trailers with on-board piping are shown in Figures 8 and 9 in Section 8.

The utility and piping requirements to connect to the adsorber and trailer are as follows:

ADSORBER

Plant Air Line	3/4" Universal air connection 100 scfm at 30 psig min. (Attaches to 3/4" flush connection on carbon fill line above carbon inlet valve)
Plant Water Line	100 gpm (max) at 30 psig min. (Attach at drain connection using a 2" female Kamlock, or through backwash inlet using an 8" 150 lb. flanged connection)

CALGON CARBON CORPORATION ♦ COPYRIGHT 2016 ♦ ALL RIGHTS RESERVED

Trailer (See Figure 8 in Section 8)

Plant Air Line	3/4" Universal air connection (for both industrial and food grade trailer) 100 scfm regulated to 15 psig max.
Plant Water Line	4" Kamlock connection (female for industrial trailer, male for food grade trailer) 100 gpm regulated to 15 psig max. (Connect to Trailer Carbon Fill or Discharge Line)

4.3 SPENT CARBON TRANSFER TO TRAILER

Spent carbon transfer from the adsorber to the trailer is accomplished by pressurizing the adsorber with plant air. When the transfer is complete, the spent carbon in the trailer is drained of water. Prior to disconnecting any lines, the air supply must be shut off, and the adsorber and all transfer lines must be vented.

4.3.1 Spent Carbon Transfer

A. Prepare for Spent Carbon Transfer:

1. Close all adsorber valves.
2. Connect the adsorber carbon outlet line to the trailer carbon fill line using 4" flexible hose.
3. Open the center manway of the trailer or trailer vent valve T1 for venting.
4. Open valve T2 in the trailer carbon fill line.
5. Check that the adsorber is full of water.
6. To aid the initial phase of transferring spent carbon, fill the transfer line with water. To do this, use a 3/4" water hose to fill the transfer line with water at the adsorber carbon outlet valve's flush-out connection.

B. Transfer Spent Carbon

1. Open the 3/4" air line valve slowly and pressurize the adsorber to 25 to 30 psig.
2. Open the 4" adsorber carbon outlet valve (V14 for adsorber V-214A, V13 for adsorber V-214B) and transfer the spent carbon to the trailer.
3. As the trailer starts to fill with carbon slurry, open the trailer septa valves T8, T9, and T10 to drain off excess motive water.

CALGON CARBON CORPORATION ♦ COPYRIGHT 2016 ♦ ALL RIGHTS RESERVED

The transfer should take 20 to 30 minutes. The transfer will end with a loss of pressure in the adsorber and the sound of air in the transfer line.

A small heel of carbon may remain in the adsorber. This material will have to be removed. Close the carbon outlet valve on the adsorber and add plant water to the adsorber for 2-3 minutes (through the drain connection or backwash inlet). Leave the 3/4" air line open. When the adsorber pressure reaches 25 psig, open the adsorber carbon outlet valve (V14 for adsorber V-214A, V13 for adsorber V-214B) and transfer the remaining amount of carbon into the trailer.

C. End Transfer

1. Close the plant air line valve.
2. Vent the tank and lines through the trailer vent valve T1.
3. Open the adsorber vent valve (V5 or V6) to further aid the venting.
4. Close the adsorber carbon outlet valve (V14 for adsorber V-214A, V13 for adsorber V-214B).
5. Using a 3/4" water hose at the adsorber carbon discharge line flush-out connection, flush out the transfer line for a few minutes to remove all traces of carbon. Bleed the water hose and remove it.

4.3.2 Drain Water From Trailer

A. Prepare for Draining Water

1. Close all valves on the trailer. Close the trailer manway.
2. Connect the plant air line to the 3/4" connection on trailer carbon fill line using the air line hose.
3. Connect the trailer carbon discharge/drain line to the drain line in the trench by means of a 4" flexible hose.

B. Draining Trailer

1. Pressurize the trailer to 15 psig by slowly opening plant air line valve T4 on the trailer.
2. Open 2" trailer septa valves T8, T9, and T10.

By pressurizing the trailer, water will be drained in less time than if drained by gravity.

CALGON CARBON CORPORATION ♦ COPYRIGHT 2016 ♦ ALL RIGHTS RESERVED

C. End Draining

1. When the carbon is completely drained, close the air line valve T4 on the trailer.
2. Vent trailer slowly through trailer vent valve T1.
3. When venting is complete, close all valves on the trailer and disconnect all hoses.

The trailer is now full of drained spent carbon and is ready for return to Calgon Carbon for reactivation.

4.4 FRESH CARBON TRANSFER FROM TRAILER

Fresh carbon is transferred in a slurry using plant air pressure. The trailer is first filled with water to create the slurry. The carbon slurry hose on the trailer is connected to the adsorber fill line and the trailer carbon discharge line. After putting a water cushion in the adsorber, the trailer is pressurized and the carbon slurry is transferred to the empty adsorber. Prior to disconnecting any lines, the air supply must be shut off, and the trailer and all transfer lines must be vented.

Under no circumstances should the standard and triple compartment trailers be connected to a pressure source exceeding 15 psig.

4.4.1 Fill The Trailer With Water

If the carbon is wetted prior to delivery, about 4000 gallons of water will be required. If the carbon is dry, about 5000 gallons of water will be required. The trailer may be filled either upflow or downflow.

A. Filling Operation

1. Connect water line to the trailer (carbon fill line if filling downflow, carbon discharge line if filling upflow) using a 4" flexible hose.
2. Open one top manway to vent trailer during filling.
3. Open trailer vent line valve T1.
4. Open trailer water line valve (valve T2 if filling downflow, valves T8, T9, and/or T10 if filling upflow).
5. Open plant water line valve slowly and fill the trailer.

CALGON CARBON CORPORATION ♦ COPYRIGHT 2016 ♦ ALL RIGHTS RESERVED

The trailer will be filled with approximately 4000 to 5000 gallons of water. The trailer filling shall be visually determined by observing the water level through the manway or by metering the desired amount.

B. End Filling Operation

1. Close plant water line valve.
2. Close trailer water line valve (T2 for downflow, T8, T9, and T10 for upflow), manways, and trailer vent valve T1.
3. Disconnect hose.

4.4.2 Transfer Carbon To Adsorber

A. Prepare for Transfer

Place about 3000 gallons of water in the adsorber. This water cushion helps to protect the underdrain system and vessel lining. If the amount of water cannot be measured, fill the vessel until water flows from the lowest sample point nozzle. After water flows from this point, continue to fill the vessel for several minutes to allow the water cushion to rise several more inches.

1. Connect the adsorber fill line to the trailer carbon discharge/drain line using 4" flexible hose.
2. Connect the 3/4" plant air line to the trailer carbon fill line using the air line hose.
3. Close all valves on the adsorber.
4. Open the adsorber vent valve (V5 or V6).
5. To aid the initial phase of transferring fresh carbon, fill the transfer line with water. To do this, use a 3/4" water hose to fill the transfer line with water, at the carbon inlet valve's flush-out connection.

B. Transfer Fresh Carbon

1. Pressurize the trailer to 15 psig by slowly opening the plant air line valve and then slowly opening valve T4 in the trailer carbon fill line.
2. Open the adsorber fill line valve (V16 for adsorber V-214A, V15 for adsorber V-214B).

CALGON CARBON CORPORATION ♦ COPYRIGHT 2016 ♦ ALL RIGHTS RESERVED

3. The Calgon Carbon trailer driver will open the trailer carbon outlet valves T5, T6, and T7 to empty the respective hoppers.
4. If a water cushion is utilized, open an adsorber drain valve shortly after starting the transfer. This is done to reduce the amount of water that overflows at the end of the transfer. The disposal of the excess motive water is provided by the customer.

C. End Transfer

1. Close the plant air valve and vent the trailer through the adsorber vent valve.
2. Close the adsorber drain valve if it was utilized during the transfer.
3. Slowly open trailer vent valve T1 for additional venting.
4. When completely vented, close the adsorber fill line valve (V16 for adsorber V-214A, V15 for adsorber V-214B), disconnect the hoses, and close the trailer valves.
5. Refer to Sections 3.3 and 3.4.2 for instructions on wetting and backwashing/backflushing the adsorber.
6. After the adsorber has been backwashed/backflushed, shut off the plant water and close the vent valve on the adsorber.

CALGON CARBON CORPORATION ♦ COPYRIGHT 2016 ♦ ALL RIGHTS RESERVED

SECTION 5

GENERAL INFORMATION

SECTION 5

GENERAL INFORMATION

5.1 MAINTENANCE

As preventative maintenance, periodic inspection of the vessel internal parts should be made to ensure that the underdrain, vessel lining, and nozzles are in good condition. As a minimum, the adsorber should be inspected once per year, or during carbon transfers if the on-line period exceeds one year. Any nozzles showing signs of fatigue or surface area restriction due to pluggage of the nozzle slots should be replaced. Nozzles should be physically checked to ensure that they are tightly secured.

Systems with high backwash frequencies and rigorous backwash requirements should be inspected more frequently. The vessel must be fully emptied to allow inspection of the interior of the vessel. Follow the safety guidelines listed in the following sections when entering enclosed vessels. Calgon Carbon Operations personnel should be present during internal vessel inspections.

Pressure gauges should be installed on influent and effluent piping to determine the pressure drop across the carbon bed. Taking periodic pressure readings will give the operator the capability of monitoring the pressure drop across the carbon vessels over time. If a pressure increase is observed, then corrective action can be taken before the pressure drop becomes a problem.

To protect the vessel from high pressure, a safety device is provided to relieve pressure at the design rating of the vessels.

In order to prevent carbon from entering the effluent stream, a carbon retainer screen is installed in the expansion joint located in the effluent line from each adsorber. In the event of an underdrain nozzle failure, the strainer will fill with carbon and the pressure drop will increase to a point where the system flow is reduced. If this should occur, the system should be operated in single vessel mode (see Figure 2 or Figure 4 in Section 8) until the damaged underdrain in the other vessel is repaired.

CALGON CARBON CORPORATION ♦ COPYRIGHT 2016 ♦ ALL RIGHTS RESERVED

5.2 SAFETY CONSIDERATIONS

5.2.1 Oxygen Deficiency Due To Activated Carbon

Studies have shown that low oxygen content exists in vessels containing wet drained granular activated carbon. The laboratory experiments conducted since that time also have revealed that commercial activated carbons in a wet or moist condition will lower the oxygen content of an isolated space.

Preliminary indications of this research are:

1) The phenomenon occurs with all types of wet activated carbon.

2) The rate of oxygen uptake naturally varies with the degree of exposure of the wet carbon to the air. Thus, it is relatively rapid in a drained bed.

3) There is some indication of a limit to the carbon's capacity for oxygen, but until more is known, it would be prudent to assume that all carbons (fresh, used, reactivated) will also exhibit this characteristic. Similarly, although these tests were run with water, it should be assumed that the phenomenon will occur in other liquid and vapor systems.

Based on the properties of wet activated carbon, a confined space entry procedure should be established for any facility using carbon in confined vessels.

All confined spaces, including those containing activated carbon, should be presumed to be hazardous. Appropriate safety measures should always be taken before entering, as well as when workers are in a confined space. OSHA regulations applicable to respiratory protection in oxygen deficient atmospheres should be strictly adhered to.

CALGON CARBON CORPORATION ♦ COPYRIGHT 2016 ♦ ALL RIGHTS RESERVED

5.2.2 Emergency Procedures

In the event a malfunction which causes a shutdown of an adsorber should occur, the flow can either be switched to the second adsorber in the system or the flow can be stopped.

If a major leak or similar problem develops, flow to the adsorber should be stopped immediately and steps taken to correct the problem. Proper safety procedures should be observed at all times to prevent damage to the equipment or injury to personnel.

5.2.3 Pressure Relief Warning

TO AVOID VESSEL DAMAGE AND ENDANGERMENT OF OPERATING PERSONNEL, DO NOT BLOCK THE PRESSURE RELIEF DEVICE FROM VENTING TO ATMOSPHERE.

5.3 RECORD KEEPING

Normally, operating data is taken for: 1) flow rates, 2) which beds are in service, 3) pressure drop across each unit, and 4) necessary analytical work for influent and effluent to each adsorber. This may include: pH, TOC level, BOD, COD, toxicity, organic contaminant levels, and inorganic levels.

CALGON CARBON CORPORATION ♦ COPYRIGHT 2016 ♦ ALL RIGHTS RESERVED

SECTION 6

ACTIVATED CARBON / ADSORPTION INFORMATION

SECTION 6

ACTIVATED CARBON / ADSORPTION INFORMATION

6.1 ADSORPTION

There are two types of adsorption: physical and chemical.

Physical adsorption is usually explained in terms of surface structure (or energy per unit volume) of the solid. While molecules in the interior of any solid material are subject to equal forces in all directions, the molecules on the material's surface are subjected to unbalanced forces. This results in an imbalance with inward forces toward the solids. Molecules that are either gaseous or liquid then become attracted (adsorbed) to the solid's surface.

The attractive forces, known as London Dispersion Forces, are the same forces responsible for surface tension and condensation of vapors to liquid. These forces are a type of Van der Waals force and range from very weak to moderately strong. Physical adsorption is reversible and changing the process variables in a system can cause molecules to be desorbed.

Chemical adsorption is a chemical reaction between a molecule in a solution or vapor with the surface of an adsorbent such as activated carbon. The chemical reaction is usually irreversible. An example of chemical adsorption is chlorine removal from water. The chemical reaction of chlorine with carbon and water forms Cl- and CO3= ions.

An important aspect to any adsorbent is the amount of pore volume it contains per unit volume or per net weight. Examples of adsorbents are activated carbon, silica gel, activated gel, alumina, and zeolite.

6.2 ACTIVATED CARBON AND HOW IT WORKS

Any organic material with high carbon content (coal, wood, peat, coconut shells, etc.) can be used as the raw material for making activated carbons of various activities and properties. When making high quality granular activated carbon from coal, the raw material is ground and a binder is added to give the end product suitable hardness. The mixture is then re-compacted and crushed to give it the desired particle size. The carbon is then activated by thermally decomposing and removing carbon from the structure in a reducing atmosphere at about 1800°F. Furnace temperature and the furnace atmosphere are controlled to produce the desired adsorption properties in the product.

CALGON CARBON CORPORATION ♦ COPYRIGHT 2016 ♦ ALL RIGHTS RESERVED

The resultant product has an incredibly large internal pore volume per unit particle volume and a network of submicroscopic pores where the adsorption takes place. About 40% of the particle volume is used to contain adsorbates. One pound of activated carbon contains an effective total area of over 100 acres.

Activated carbon normally removes adsorbates (contaminants or desired products) from a solution (solute) through physical adsorption. The adsorbate would have to differ from the solute. For example, in aqueous solutions the solute should be more neutral or non-polar and have a higher molecular weight.

Many factors affect carbon adsorption in liquids, such as pH, flow rate, temperature, solubility, concentration of adsorbate, type and number of different adsorbates, viscosity, and the level of adsorbate removal required.

In any stream, there are four steps that occur in order for adsorption to take place. First, the adsorbate molecule must migrate through the bulk of solution toward the carbon particle. This is known as bulk diffusion. Second, the adsorbate penetrates the surface film to reach the exterior surface of the carbon. This is known as film diffusion. Third, the adsorbate diffuses through the transport or large pores. This is known as pore diffusion. Fourth, the adsorbate is adsorbed deep into the micropore structure of the activated carbon. In most water applications, the rate limiting step is the pore diffusion step.

In a typical fixed bed carbon system, the liquid flows down through an adsorber. Initially, the adsorbate is adsorbed onto the top most portion of the carbon. The rate of adsorption will determine the depth of carbon (mass transfer zone) that is utilized to remove the adsorbates. The varying concentration in the mass transfer zone is known as the wavefront.

Eventually, the wavefront moves through the bed and contamination breaks through into the effluent from the bed. This is known as the breakpoint. In a single or parallel adsorber system, the contaminants are usually monitored until the effluent approaches the allowable limit. The adsorber is then taken off-line and the spent carbon is removed. The adsorber is then refilled with fresh carbon and brought back on-line. In a series mode, the mass transfer zone in the first or lead bed is allowed to pass through the adsorber into the second bed. Usually, when adsorbing multiple components, the first two or three compounds that are being monitored in the effluent from the lead bed are allowed to approach their influent levels, at which point the adsorber is taken off-line.

CALGON CARBON CORPORATION ♦ COPYRIGHT 2016 ♦ ALL RIGHTS RESERVED

6.3 FACTORS AFFECTING ADSORPTION

Concentration: With each adsorbate, a high concentration will result in a higher adsorption capacity for that adsorbate on the carbon. For example, if an adsorbate has a one percent loading at 1 mg/l, it might have a three percent loading at 10 mg/l. However, the volume of carbon required to treat a fixed volume of solution will go up if the concentration goes up.

When the concentration of the feedstream changes dramatically, such as when a spill occurs upstream of a potable water plant intake, undesirable effects may occur. Concentrations at the intake of the plant may go up 100 to 1000 times the normal influent concentration. The activated carbon would adsorb the contamination with a higher capacity, if adsorptive capacity was available.

However, upon passage of the spill past the intake, the activated carbon may desorb some of the high level contamination to fresh carbon downstream of the mass transfer zone or into the effluent. When upsets occur, a conservative approximation is to assume that additional carbon is exhausted by the excess contaminant at the original loading rate for the normal influent level.

Another example is when the contaminant concentration in the influent decreases for a period of time. In this instance the adsorbate will start to desorb. The rate of desorption is slower than the rate of adsorption. Therefore, a conservative estimate of the overall effect is that a fixed volume at the reduced influent level will exhaust as much carbon as if the influent concentration was consistently high.

A steady feed concentration will help minimize the amount of carbon that is used in an application. A steady feed would usually be considered to be +/-25% of the average concentration. However, the carbon bed will act to average out upsets and variations, except when the bed is nearly exhausted.

Flow Rate: In many applications, the flow rate to the adsorber is varied because the flow demand changes. As the flow changes, so does the mass transfer zone (MTZ). These changes are approximated by a directly proportional relationship between MTZ length and flow rate. For example, if the MTZ is 1 foot at 250 gpm, it would be 2 feet at 500 gpm. If the flow rate is increased dramatically, the MTZ is further lengthened because some desorption may take place, resulting in less efficient operation. For the optimum carbon usage, the flow rate should be steady (if possible).

In a series configuration, increasing the flow rate usually has a minimal impact. In a parallel mode, this impact is more substantial since the carbon is usually taken off line on the basis of the effluent quality. since the MTZ is lengthened the on-stream time will be shortened.

CALGON CARBON CORPORATION ♦ COPYRIGHT 2016 ♦ ALL RIGHTS RESERVED

Viscosity: As viscosity increases in a system, the time to adsorb lengthens, and thus the MTZ lengthens. In a process application the temperature of the feedstream may be raised to offset increases in viscosity, but if the temperature is raised too high degradation of product may occur or the adsorption capacity of the carbon may be reduced. In water applications, viscosity has minimal impact because it is relatively low.

Temperature: In liquid phase systems, the adsorptive capacity is usually lowered at higher temperatures because the solubility is increased.

Feedstream pH: The pH of the feedstream can impact adsorption efficiency. This impact may be substantial since the pH affects the ionization of the adsorbate. Usually, the more ionic adsorbates have less adsorption capacity. Therefore, organic acids adsorb better at lower pH levels, while organic bases adsorb better at higher pH levels.

Water Characteristics: On each start-up of fresh carbon, the pH of the effluent stream may rise. This occurs because species like sulfates, nitrates and chlorine adsorb and displace alkaline species. The pH will return to normal, depending on water characteristics, after 250 to 350 bed volumes have been treated. If this is a problem, then either acid should be added to the effluent, or the carbon should be allowed to stand in a sodium sulfate solution for 10 to 12 hours.

The carbon has a capacity for sodium sulfate of 1% by weight. Therefore, the water in contact with the carbon should contain a quantity of sodium sulfate at least equal to 2% by weight of the carbon. In a 20,000 pound adsorber this would be 400 pounds of Na2SO4 in 5,000 gallons of water.

Solubility: The water solubility of a particular compound is a very good indicator of its adsorptivity. Generally, the more soluble a compound is, the more difficult it is to be adsorbed. Also, a more water soluble compound has a longer MTZ.

Suspended Solids: Suspended solids should usually be taken out of the feedstream before the carbon adsorbers. Suspended solids (>10 microns) will usually be filtered out within the first 6" of carbon and the pressure drop across the carbon will increase. If the pressure drop increases too much, the unit should be backwashed or backflushed. Normally, feed streams containing suspended solids of more than 50 ppm are pre-filtered.

CALGON CARBON CORPORATION ♦ COPYRIGHT 2016 ♦ ALL RIGHTS RESERVED

If the suspended solids are finer than 10 microns, the solids will usually not be filtered out by the carbon. The solids would then pass through the carbon into the effluent. This condition is very undesirable because the solids often contain dissolved or attached adsorbate and premature breakthrough can appear to occur. For materials to adsorb they must be in solution, so they can diffuse into the pore structure.

Immiscible Oils and Greases: Immiscible oils and greases have to be separated from the feedstream before the carbon adsorbers. If they are not removed, they may coat the carbon particles with a fine film. The adsorbates will not be able to pass through this film, and the carbon will not be effectively utilized. Oils and grease can also behave as a suspended, immiscible solid.

Heat of Adsorption: Heat is often given off when molecules are adsorbed. The amount of heat is conservatively estimated at two (2) times the heat of vaporization. In a process stream where the solvent is an organic liquid, a heat-up potential exists if the carbon has not been previously wetted and deaerated properly. Refer to Section 3.3 of this manual for wetting procedures.

Water has too low a heat of adsorption to cause a problem for aqueous solutions.

Competitive Adsorption: In most carbon applications (process, wastewater, groundwater, and potable water), more than one adsorbing compound is in the feedstream. Some of these compounds must be adsorbed while others may be permitted to pass through the carbon bed.

Unfortunately, the activated carbon cannot tell which of the molecules must be adsorbed. All of the components in the feedstream will compete for adsorption space, making the removal of target components less efficient. Therefore, competitive adsorption can cause premature breakthrough of the target component.

6.4 ADDITIONAL ADSORPTION THEORY

Desorption/Displacement: Desorption is the opposite of adsorption and may occur for many reasons. Changes in the feedstream components, temperature, pH, and feedstream concentration may promote desorption. In order to minimize desorption and optimize carbon usage, the feedstream should be stable (if possible). The rate at which desorption takes place is usually much slower than the adsorption rate.

CALGON CARBON CORPORATION ♦ COPYRIGHT 2016 ♦ ALL RIGHTS RESERVED

If a more strongly adsorbed organic enters the feed it will desorb the target adsorbate. This forces the target adsorbate to re-adsorb deeper in the carbon bed, and eventually breakthrough will occur.

Roll-Over in Competitive Adsorption: When an adsorber system runs beyond breakthrough, the more weakly adsorbed components originally in the feedstream can be desorbed into the effluent. The resulting concentrations may exceed the inlet concentrations. This phenomenon is known as roll-over. In a properly operated column system, roll-over of key components will not be observed in the effluent.

Effect of Bacteria: Higher pressure drops can be a result of bacteria growth in some wastewater applications. This is due to bacteria slime and exhaust gasses from the bacteria. If backwashing does not get rid of the pressure drop problem, then either NaOH washing or higher temperatures will control bacteria growth. Usually, sodium hydroxide washing is used in lined vessels. Do not use biocides, chlorine, or other additives, since they will adsorb and reduce carbon life without affecting the bacteria.

Refer to Section 8 for sodium hydroxide washing procedures.

6.5 GLOSSARY

The following terms are commonly used to describe adsorption theory, activated carbon, and adsorption systems.

ABRASION NUMBER -- A test performed on a particulate material to define the resistance of the particles to degrade on handling. It is calculated by contacting a sample with steel balls in a Ro-Tap machine and determining the ratio of the final to the original mean particle diameter.

ACTIVATED CARBON -- A carbonaceous material that is a crude form of graphite with a random and amorphous structure. The structure is highly porous, over a broad range of pore sizes, from visible to molecular cracks and crevices.

ACID WASHED ACTIVATED CARBON -- Activated carbon which has been washed with an acid solution for the purpose of dissolving the iron from the carbon. Acid washed carbons are usually used in systems/processes operating at low pH.

ADSORBATE -- Any substance that is or can be adsorbed on the adsorbent.

ADSORBENT -- Any solid having the ability to concentrate significant quantities of other substances on its surface. Activated carbon is an adsorbent.

ADSORBER -- A vessel designed to hold granular activated carbon.

CALGON CARBON CORPORATION ♦ COPYRIGHT 2016 ♦ ALL RIGHTS RESERVED

ADSORPTION -- A phenomenon where an adsorbate is physically attracted to the surface of the adsorbent.

ADSORPTION ISOTHERM -- A graphic depiction of the capacity of an adsorbent to adsorb a specific adsorbate. The measurements of capacity are performed at constant temperature using either varying amounts of the adsorbate or adsorbent.

ADSORPTION PORES -- The finest pores in the carbon structure. Pores which have adsorption capacity.

AGGLOMERATED -- Material that has formed into a solid mass.

AIR SCOURING -- A process that uses pressurized air to break-up any agglomerations in a carbon bed. Air is blown into the bottom of the bed before the bed is backwashed. Air scouring capability must be incorporated into the system design during the design phase.

APPARENT DENSITY -- A physical property that is defined as the mass per unit volume of a granular material under specified conditions. The apparent density includes the carbon skeleton volume plus the pore and void volumes.

ASH -- The noncombustible mineral matter that is contained in activated carbon and is the residue that remains after the combustion of a carbonaceous material. The measurement of ash is performed under specified conditions and is normally defined on a weight percent basis.

BACKWASH -- An operating method used to remove suspended solids from a carbon bed. Water is pumped into the bottom of the adsorber, flows upward through the carbon bed, and exits through the backwash outlet. The upward flow expands the bed and removes carbon fines, entrained air and suspended solids. The percent bed expansion (up to 50%) and time required for backwashing are a function of the backwash rate and water temperature.

BACKFLUSH -- A process similar to backwashing, but the flow rate is not high enough to expand the bed more than five percent.

CARBON HEEL -- Any quantity of spent carbon not removed from an adsorber before recharging the vessel with fresh carbon.

CARBON TETRACHLORIDE ACTIVITY -- A measurement of the increase in weight of a sample of activated carbon after air saturated with carbon tetrachloride is passed through the sample. The test is performed at a given temperature and the results are reported as weight percent.

CALGON CARBON CORPORATION ♦ COPYRIGHT 2016 ♦ ALL RIGHTS RESERVED

CARBON TRAILER -- A bulk trailer used to transport 20,000 pound (or less) loads of granular carbon to/from the customer's plant site.

CHEMISORPTION -- A chemical process that binds an adsorbate to the surface of an adsorbent by forces whose energy levels approximate those of a chemical bond.

COLOR BODIES -- Complex molecules which impart color (usually undesirable) to a solution. Carbon adsorption is often used for color removal applications.

COUNTER-CURRENT OPERATION -- A mode of operation where the flow of liquid is opposite the movement of the adsorbent. This method of operation produces the lowest carbon usage rate or highest efficiency.

CRITICAL BED DEPTH -- The distance between the fresh carbon and the spent carbon for a bed of activated carbon. In other words, it is the portion of the bed which is partially spent and the zone where adsorption takes place. The critical bed depth is measured in feet. For a single column system, this is the amount of carbon that is not completely utilized when the effluent objective is reached and the carbon is taken off-stream.

DEAERATION (WETTING) -- The process of removing air (gases) from a carbon bed and the carbon pores. The volume of air in activated carbon is in the void space and pore volume, which typically accounts for 80% of the total volume in a carbon bed (the carbon skeleton accounts for the other 20%).

DESORPTION -- The opposite of adsorption. A phenomenon where an adsorbed substance leaves the surface of the adsorbent.

EDUCTOR -- A device to motivate a slurry of activated carbon and water slurry through hoses and pipes. An eductor has no moving parts and utilizes pressurized water as the motive force.

FRESH CARBON--New carbon that is placed into an adsorber. Fresh carbon can be either virgin carbon or newly reactivated carbon.

HARDNESS NUMBER -- A measurement of the resistance of a granular carbon to the degradation action of steel balls in a Ro-Tap machine. This number is calculated by using the weight of granular carbon retained on a particular sieve after the carbon has been in vigorous contact with the steel balls.

HEAT OF ADSORPTION -- The heat given off when molecules are adsorbed.

IODINE NUMBER -- The measurement of the amount of iodine adsorbed by one gram of carbon. The concentration of iodine is 0.02N. The iodine number is reported as milligrams of iodine.

LAG ADSORBER -- The second bed of carbon through which the liquid passes in a series operated adsorption system. The lag vessel contains carbon that is partially spent when the carbon in the lead adsorber is completely spent.

LEAD ADSORBER -- The first bed of carbon through which the liquid passes in a series operated adsorption system. The lead vessel contains carbon that is the first to become spent.

MASS TRANSFER ZONE -- The adsorption gradient that exists in the carbon bed. It corresponds to the gradual transition of the carbon from spent to fresh.

MESH SIZE -- The measurement of the particle size of granular activated carbons determined by the U.S. Sieve Series. Particle size distribution within a mesh series is typically given in the specification of the particular Calgon Carbon carbon.

MOLASSES NUMBER -- A ratio of the optical densities of a molasses solution treated with a standard activated carbon compared to a molasses solution treated with the activated carbon in question.

MOISTURE -- The measurement of the amount of water adsorbed on activated carbon. Moisture is reported as percent. For Calgon Carbon's coal based products the moisture specification is less than 2% as packed.

PARALLEL FLOW -- The mode of operation when two or more adsorbers are operated so that the influent flow is distributed equally to each adsorber.

PARTICLE DENSITY -- A measurement of the weight per unit volume of granular activated carbon as determined by the displacement of mercury. Particle density is typically reported as g/cc. The particle density includes the carbon skeleton volume plus the pore volume.

POLISH ADSORBER -- See Lag Adsorber.

PORE VOLUME -- A measurement of the volume of pores in a unit weight of carbon. The pore volume is determined by obtaining the difference in the volumetric displacement of carbon in mercury and helium at standard conditions.

PRESSURE RELIEF DEVICE -- A device such as a rupture disk or a pressure relief valve which prevents a vessel from exceeding its design pressure.

REAL DENSITY -- A measurement of the weight per unit volume of the skeleton only of a carbon granule. This measurement excludes the pore volume and the inter-particle void space. This property is determined by helium displacement and is approximately 2.1 g/cc for coal-based carbons.

CALGON CARBON CORPORATION ♦ COPYRIGHT 2016 ♦ ALL RIGHTS RESERVED

REACTIVATED CARBON (REACT CARBON) -- Granular carbon that has been thermally reactivated for re-use as fresh carbon in adsorption systems.

REACTIVATION -- A process to remove adsorbates from spent granular activated carbons using vaporization and oxidation at temperatures greater than 1000NF. Reactivated carbon can be reused. Depending on the application the performance of the reactivated carbon can be less than, equal to, or better than virgin carbon. This is a type of carbon regeneration.

SERIES FLOW (LEAD-LAG OPERATION) -- A mode of operation where two or more adsorbers are operated so that each adsorber treats the entire influent flow, one after the other. When the carbon in the lead bed is spent, the carbon is replaced with fresh carbon and this adsorber is placed in the lag (polish) position.

SPECIFIC HEAT -- A physical property that is defined as the ratio of the quantity of heat required to raise the temperature of a compound through a particular temperature interval compared to the corresponding heat quantity for water. For Calgon Carbon carbons this value is approximately 0.20 cal/g/°C at temperatures less than 200°C.

SPENT CARBON -- Carbon that has adsorbed organic contaminants and must be removed from the system so that the effluent quality specifications are not exceeded.

SURFACE AREA -- A measurement of the total surface area available for adsorption inside the pores of activated carbon. Surface area is determined by the Brunauer, Emmett, and Teller method (BET Method), which uses the adsorption of nitrogen at liquid nitrogen temperature. Surface area is usually expressed in square meters per gram of carbon. The surface area of Calgon Carbon carbons ranges from 700 to 1200 square meters per gram.

TRANSFER TANK -- A storage tank designed to hold a charge of spent carbon. The purpose of the tank is to save on freight as only one truck is needed to deliver fresh carbon and return the spent carbon for reactivation.

TRANSPORT PORES -- Pores larger than the largest adsorption pores. These pores function as a diffusion path to transport adsorbates. Adsorption does not occur in these pores even at saturated conditions.

UNDERDRAIN -- A device located inside the adsorber to collect the fluid being treated. The underdrain permits the fluid to flow into the piping network while retaining the granular carbon in the vessel**.**

VENT -- A pipe line from an adsorber or transfer tank to an unrestricted sewer or the atmosphere.

VIRGIN CARBON -- Fresh granular activated carbon that has not been used.

CALGON CARBON CORPORATION ♦ COPYRIGHT 2016 ♦ ALL RIGHTS RESERVED

VOIDS -- The space (volume) between the carbon granules. For Calgon Carbon carbons the typical range is 37% to 43% by volume.

WATER CUSHION -- The water added to an adsorber or transfer tank before charging the vessel with carbon. This is done to protect the underdrain, nozzles and lining.

WAVE FRONT -- See Mass Transfer Zone

SECTION 7

CARBON DATA

OLC AW 12x40

Coconut Acid Washed Granular Activated Carbon

Applications

Liquid Chemical

Water Processing

Point-of-Entry/ Point-of-Use

Bottle & Brewing

Remediation Water Treatment

Industrial Wastewater

Pond/Aquarium/ Swim

OLC AW 12x40 coconut activated carbon can be used in a variety of water, wastewater and process liquid applications for the removal of dissolved organic compounds. OLC AW 12x40 has been used in applications such as process water purification, wastewater treatment and industrial chemical purification.

Description

OLC AW 12x40 is an acid washed coconut activated carbon for the removal of dissolved organic contaminants from water, wastewater and process liquids. These contaminants include taste and odor compounds, organic color, total organic carbon (TOC) and industrial chemicals such as chlorinated solvents (TCE, PCE). The pore structure enables it to be used for adsorption of both high and low molecule weight impurities from waters and liquids. The carbon is especially effective for adsorbing trace organic compounds such as vinyl chloride, methylene chloride, MTBE and THM's/disinfection by-products. OLC AW 12x40 is certified to NSF/ANSI 61 standard and complies with the requirements for activated carbon as defined by the Food Chemicals Codex (FCC) (8th Edition) published by the U.S. Pharmacopeia.

Features / Benefits

- Coconut carbon
- Low ash
- High hardness relative to other raw materials
- Acid washed to prevent ash leaching in acidic solutions
- A strongly adsorbing pore structure optimal for the treatment of chlorine and other organics
- Hardness and abrasion resistance required for thermal reactivation and minimizing generation of fines in operations requiring backwashing
- Pore structure provides a wide range of contaminant removal capabilities

Specifications	OLC AW 12x40
Iodine Number, mg/g	1050 min
Ash, wt%	3 max
Moisture (As packaged), wt%	5 max
Acid Soluble Ash, wt%	1.0 max
pH (Extractable) (ASTM)	6 min / 8 max
Hardness Number	97 min
Water Solubles, wt%	1 max
12 US Mesh [1.70 mm], wt%	5 max
< 40 US Mesh [0.425 mm] (PAN), wt%	5 max

Safety Message

Wet activated carbon can deplete oxygen from air in enclosed spaces. If use in an enclosed space is required, procedures for work in an oxygen deficient environment should be followed.

1.800.4CARBON calgoncarbon.com

© Copyright 2015 Calgon Carbon Corporation, All Rights Reserved

Typical Pressure Drop (OLC AW 12x40)

Based on a backwashed and segregated bed

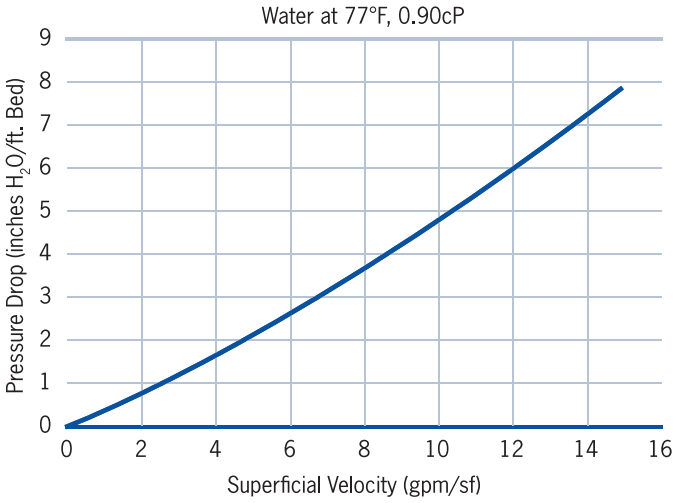

Typical Bed Expansion During Backwash

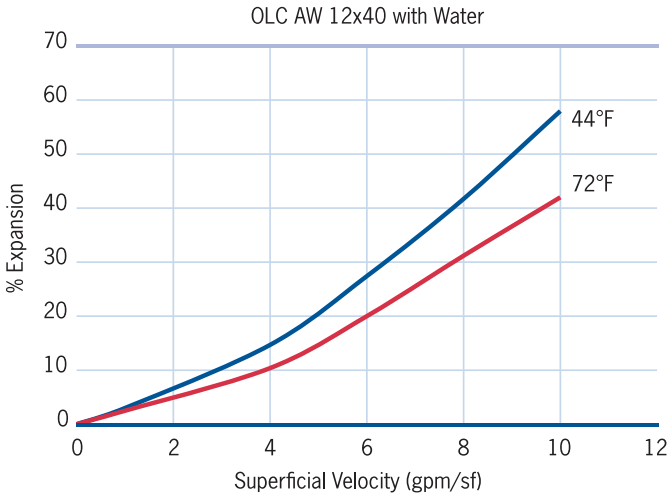

Design Considerations

OLC AW 12x40 coconut activated carbon is typically applied in down-flow packed-bed operations using both pressure and gravity systems. Design considerations for a carbon system is based on the user's operating conditions, the treatment objectives desired, and the chemical nature of the compound(s) being adsorbed. In general, downflow superficial velocity can be from 1 gpm/ft2 to 10 gpm/ft2, depending on the application and contact times can vary from 7.5 minutes to hours. Design may vary based on the type of liquid, contaminants to remove, and desired treatment objectives.

Safety Message

Wet activated carbon can deplete oxygen from air in enclosed spaces. If use in an enclosed space is required, procedures for work in an oxygen deficient environment should be followed.

© Copyright 2015 Calgon Carbon Corporation, All Rights Reserved

OLC AW 12X40
Safety Data Sheet

Issued: 04/20/2015
Supersedes: 12/30/2011
Version: 1.0

SECTION 1: Identification of the Substance/Mixture and of the Company/Undertaking

1.1. Product identifier

Product name : OLC AW 12X40
Product form : Substance
CAS No : 7440-44-0
Product code : 12146
Synonyms : Activated Carbon

1.2. Relevant identified uses of the substance or mixture and uses advised against

Use of the substance/mixture : Adsorbent

1.3. Details of the supplier of the safety data sheet

Calgon Carbon Corporation
P.O. Box 717
Pittsburgh, PA 15230
412-787-6700

1.4. Emergency telephone number

Emergency number : CHEMTREC (24 HRS): 1-800-424-9300

SECTION 2: Hazards Identification

2.1. Classification of the substance or mixture

GHS-US classification

Combustible Dust H232

Not classified as a simple asphyxiant. Product does not displace oxygen in the ambient atmosphere, but slowly adsorbs oxygen from a confined space when wet. Under conditions of anticipated and recommended use, product does not pose an asphyxiation hazard.

2.2. Label elements

GHS-US labeling

Signal word (GHS-US) : **Warning**

Hazard statements (GHS-US) : H232 - May form combustible dust concentrations in air

2.3. Other hazards

Other hazards not contributing to the classification : Wet activated carbon can deplete oxygen from air in enclosed spaces. If use in an enclosed space is required, procedures for work in an oxygen deficient environment should be followed.

2.4. Unknown acute toxicity (GHS-US)

No data available

SECTION 3: Composition/Information on Ingredients

3.1. Substance

Name	Product identifier	%
Activated Carbon	(CAS No) 7440-44-0	< 100

3.2. Mixture

Not applicable

SECTION 4: First Aid Measures

4.1. Description of first aid measures

First-aid measures general : If exposed or concerned, get medical attention/advice. Show this safety data sheet to the doctor in attendance. Wash contaminated clothing before re-use. Never give anything to an unconscious person.

First-aid measures after inhalation : IF INHALED: Remove to fresh air and keep at rest in a comfortable position for breathing.

First-aid measures after skin contact : IF ON SKIN (or clothing): Remove affected clothing and wash all exposed skin with water for at least 15 minutes.

First-aid measures after eye contact : IF IN EYES: Immediately flush with plenty of water for at least 15 minutes. Remove contact lenses if present and easy to do so. Continue rinsing.

First-aid measures after ingestion : IF SWALLOWED: Rinse mouth thoroughly. Do not induce vomiting without advice from poison control center or medical professional. Get medical attention if you feel unwell.

4.2. Most important symptoms and effects, both acute and delayed

Symptoms/injuries : Not expected to present a significant hazard under anticipated conditions of normal use. However, dust may cause irritation and redness of the eyes, irritation of the skin and respiratory system. The effects of long-term, low-level exposures to this product have not been determined.

4.3. Indication of any immediate medical attention and special treatment needed

No additional information available

SECTION 5: Firefighting Measures

5.1. Extinguishing media

Suitable extinguishing media : Water spray. Carbon dioxide. Dry chemical. Foam. Sand.

Unsuitable extinguishing media : None known.

5.2. Special hazards arising from the substance or mixture

Fire hazard : Dust may be combustible under specific conditions. May be ignited by heat, sparks or flames.

Explosion hazard : Dust may form explosive mixture in air.

Reactivity : No dangerous reactions known under normal conditions of use. Carbon oxides may be emitted upon combustion of material.

5.3. Advice for firefighters

Firefighting instructions : Wear NIOSH-approved self-contained breathing apparatus suitable for the surrounding fire. Use water spray or fog for cooling exposed containers. Evacuate area.

SECTION 6: Accidental Release Measures

6.1. Personal precautions, protective equipment and emergency procedures

General measures : Evacuate area. Keep upwind. Ventilate area. Spill should be handled by trained clean-up crews properly equipped with respiratory equipment and full chemical protective gear (see Section 8).

6.1.1. For non-emergency personnel

No additional information available

6.1.2. For emergency responders

No additional information available

6.2. Environmental precautions

Prevent entry to sewers and public waters. Avoid release to the environment. Product is not soluble, but can cause particulate emission of discharged into waterways. Dike all entrances to sewers and drains to avoid introducing material to waterways. Notify authorities if product enters sewers or public waters.

6.3. Methods and material for containment and cleaning up

For containment : Sweep or shovel spills into appropriate container for disposal. Minimize generation of dust.

Methods for cleaning up : Sweep or shovel spills into appropriate container for disposal. Minimize generation of dust. Dispose of material in compliance with local, state, and federal regulations.

6.4. Reference to other sections

No additional information available

SECTION 7: Handling and Storage

7.1. Precautions for safe handling

Precautions for safe handling : Avoid dust formation. Avoid contact with skin, eyes and clothing. Do not handle until all safety precautions have been read and understood. Wash hands and other exposed areas with mild soap and water before eating, drinking or smoking and when leaving work. Keep away from sources of ignition - No smoking.

7.2. Conditions for safe storage, including any incompatibilities

Storage conditions : Keep container tightly closed in a cool, dry, and well-ventilated place. Keep away from ignition sources.

SECTION 8: Exposure Controls/Personal Protection

8.1. Control parameters

Activated Carbon (7440-44-0)*	
OSHA PEL (TWA) (mg/m³)	≤ 5 (Respirable Fraction) ≤ 15 (Total Dust)

*Exposure limits are for inert or nuissance dust. No specific exposure limits have been established for this activated carbon product by OSHA or ACGIH.

8.2. Exposure controls

Appropriate engineering controls : Provide adequate general and local exhaust ventilation. Use process enclosures, local exhaust ventilation, or other engineering controls to control airborne levels below recommended exposure limits. Use explosion-proof equipment with flammable materials. Ensure adequate ventilation, especially in confined areas. Wet activated carbon can deplete oxygen from air in enclosed spaces. If use in an enclosed space is required, procedures for work in an oxygen deficient environment should be followed.

Personal protective equipment : Gloves. Safety glasses. Insufficient ventilation: wear respiratory protection.

Hand protection : Gloves should be classified under Standard EN 374 or ASTM F1296. Suggested glove materials are: Neoprene, Nitrile/butadiene rubber, Polyethylene, Ethyl vinyl alcohol laminate, PVC or vinyl. Suitable gloves for this specific application can be recommended by the glove supplier.

Eye protection : Use eye protection suitable to the environment. Avoid direct contact with eyes.

Skin and body protection : Wear long sleeves, and chemically impervious PPE/coveralls to minimize bodily exposure.

Respiratory protection : Use NIOSH-approved dust/particulate respirator. Where vapor, mist, or dust exceed PELs or other applicable OELs, use NIOSH-approved respiratory protective equipment.

SECTION 9: Physical and Chemical Properties

9.1. Information on basic physical and chemical properties

Physical state	: Solid
Appearance	: Granular, powder, or pelletized substance
Color	: Black
Odor	: Odorless
Odor threshold	: No data available
pH	: No data available
Relative evaporation rate (butylacetate=1)	: Not applicable
Melting point	: Not applicable
Freezing point	: Not applicable
Boiling point	: Not applicable
Flash point	: No data available
Auto-ignition temperature	: > 220 °C
Decomposition temperature	: No data available
Flammability (solid, gas)	: > 220 °C
Vapor pressure	: Not applicable
Relative vapor density at 20 °C	: Not applicable
Apparent density	: 0.4 - 0.7 g/cc
Solubility	: Insoluble.
Log Pow	: Not applicable
Log Kow	: Not applicable
Viscosity, kinematic	: Not applicable
Viscosity, dynamic	: Not applicable
Explosive properties	: No data available
Oxidising properties	: No data available
Explosive limits	: No data available

9.2. Other information

No additional information available

SECTION 10: Stability and Reactivity

10.1. Reactivity

No dangerous reactions known under normal conditions of use.

10.2. Chemical stability

Stable under use and storage conditions as recommended in section 7.

10.3. Possibility of hazardous reactions

None known.

10.4. Conditions to avoid

Avoid dust formation. Heat. Ignition sources. Exposure to high concentrations of organic compounds may cause bed temperature to rise.

10.5. Incompatible materials

Alkali metals. Strong oxidizing agents.

10.6. Hazardous decomposition products

Carbon monoxide (CO), carbon dioxide (CO_2).

SECTION 11: Toxicological Information

11.1. Information on toxicological effects

Acute toxicity : Not classified

Activated Carbon (7440-44-0)	
LD50 oral rat	> 2000 mg/kg

Skin corrosion/irritation : Not classified

Serious eye damage/irritation : Not classified

Respiratory or skin sensitisation : Not classified

Germ cell mutagenicity : Not classified

Carcinogenicity : Not classified

Silica: Crystalline, quartz (14808-60-7)	
IARC group	1 - Carcinogenic to humans
The International Agency for Research on Cancer (IARC) has classified "silica dust, crystalline, in the form of quartz or cristobalite" as carcinogenic to humans (group 1). However these warnings refer to crystalline silica dusts and do not apply to solid activated carbon containing crystalline silica as a naturally occuring, bound impurity. As such, we have not classified this product as a carcinogen in accordance with the US OSHA Hazard Communication Standard (29 CFR §1910.1200) but recommend that users avoid inhalation of product in a dust form.	

Reproductive toxicity : Not classified

Specific target organ toxicity (single exposure) : Not classified

Specific target organ toxicity (repeated exposure) : Not classified

Aspiration hazard : Not classified

Symptoms/injuries : Not expected to present a significant hazard under anticipated conditions of normal use. However, dust may cause irritation and redness of the eyes, irritation of the skin and respiratory system. The effects of long-term, low-level exposures to this product have not been determined.

SECTION 12: Ecological Information

12.1. Toxicity

No additional information available

12.2. Persistence and degradability

No additional information available

12.3. Bioaccumulative potential

No additional information available

12.4. Mobility in soil

No additional information available

12.5. Other adverse effects

No additional information available

SECTION 13: Disposal Considerations

13.1. Waste treatment methods

Waste treatment and disposal methods : Vacuum or shovel material into a closed container. Dispose in a safe manner in accordance with local/national regulations. Do not allow the product to be released into the environment. Subject to Calgon Carbon technical approval, non-powdered activated carbons may be reactivated to allow recycle and reuse.

Additional information : Activated carbon is an adsorbent media; hazard classification is generally determined by the adsorbate. Consult U.S. EPA guidelines listed in 40 CFR 261.3 for more information on hazardous waste disposal.

SECTION 14: Transport Information

14.1. In accordance with DOT

Not classified as hazardous for domestic land transport

UN-No.(DOT) : None on finished product

DOT NA no. : None on finished product

Proper Shipping Name (DOT) : Not regulated

Department of Transportation (DOT) Hazard Classes : None on finished product

Hazard labels (DOT) : None on finished product

Packing group (DOT) : None on finished product

DOT Quantity Limitations Passenger aircraft/rail (49 CFR 173.27) : None on finished product

14.2. Transport by sea

Not classified as hazardous for water transport

IMO / IMDG

UN/NA Identification Number : None on finished product

UN- Proper Shipping Name : Not regulated

Transport Hazard Class : None on finished product

14.3. Air transport

Not classified as hazardous for air transport

ICAO / IATA

UN/NA No : None on finished product

UN- Proper Shipping Name : Not regulated

Transport Hazard Class : None on finished product

Packing Group : None on finished product

Marine Pollutant : None on finished product

14.4. Additional information

Other information : Under the UN classification for activated carbon, all activated carbons have been identified as a class 4.2 product. However, this product type or an equivalent has been tested according to the *United Nations Transport of Dangerous Goods* test protocol for a "self-heating substance" (*United Nations Transportation of Dangerous Goods, Manual of Tests and Criteria, Part III, Section 33.3.1.6 - Test N.4 - Test Method for Self Heating Substances)* and it has been specifically determined that this product type or an equivalent does not meet the definition of a self-heating substance (class 4.2) or any other hazard class, and therefore should not be listed as a DOT hazardous material.

SECTION 15: Regulatory Information

15.1. US Federal regulations

OLC AW 12X40
All chemical substances in this product are listed in the EPA (Environment Protection Agency) TSCA (Toxic Substances Control Act) Inventory or are exempt

Cobalt (7440-48-4)	
Listed on the United States TSCA (Toxic Substances Control Act) inventory Listed on United States SARA Section 313	
SARA Section 313 - Emission Reporting	0.1 %

15.2. International regulations

No additional information available

15.3. US State regulations

California Proposition 65

WARNING: This product contains, or may contain, trace quantities of a substance(s) known to the state of California to cause cancer, birth defects, or other reproductive harm.

Silica: Crystalline, quartz (14808-60-7)				
U.S. - California - Proposition 65 - Carcinogens List	U.S. - California - Proposition 65 - Developmental Toxicity	U.S. - California - Proposition 65 - Reproductive Toxicity - Female	U.S. - California - Proposition 65 - Reproductive Toxicity - Male	No significance risk level (NSRL)
Yes	No	No	No	NA
Cobalt (7440-48-4)				
U.S. - California - Proposition 65 - Carcinogens List	U.S. - California - Proposition 65 - Developmental Toxicity	U.S. - California - Proposition 65 - Reproductive Toxicity - Female	U.S. - California - Proposition 65 - Reproductive Toxicity - Male	No significance risk level (NSRL)
Yes	No	No	No	NA
Titanium dioxide (13463-67-7)				
U.S. - California - Proposition 65 - Carcinogens List	U.S. - California - Proposition 65 - Developmental Toxicity	U.S. - California - Proposition 65 - Reproductive Toxicity - Female	U.S. - California - Proposition 65 - Reproductive Toxicity - Male	No significance risk level (NSRL)
Yes	No	No	No	NA

Aluminum oxide (1344-28-1)
U.S. - New Jersey - Right to Know Hazardous Substance List U.S. - Massachusetts - Right to Know List U.S. - Pennsylvania - RTK (Right to Know) - Environmental Hazard List
Calcium sulfate (7778-18-9)
U.S. - Massachusetts - Right to Know List U.S. - New Jersey - Right to Know Hazardous Substance List U.S. - Pennsylvania - RTK (Right to Know) List
Silica: Crystalline, quartz (14808-60-7)
U.S. - New Jersey - Right to Know Hazardous Substance List U.S. - Pennsylvania - RTK (Right to Know) List U.S. - Massachusetts - Right to Know List

SECTION 16: Other Information

Indication of changes : Revision 1.0: New SDS Created.

Revision Date : 04/20/2015

Other information : Author: CJS.

For internal use only : PR #1

Prepared according to Federal Register / Vol. 77, No. 58 / Monday, March 26, 2012 / Rules and Regulations

NFPA health hazard : 0 - Exposure under fire conditions would offer no hazard beyond that of ordinary combustible materials.

NFPA fire hazard : 1 - Must be preheated before ignition can occur.

NFPA reactivity : 0 - Normally stable, even under fire exposure conditions, and are not reactive with water.

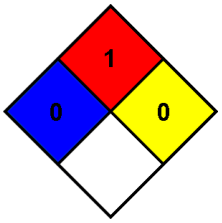

HMIS III Rating

Health : 0

Flammability : 1

Physical	: 0
Personal Protection	:

This information is based on our current knowledge and is intended to describe the product for the purposes of health, safety and environmental requirements only. It should not therefore be construed as guaranteeing any specific property of the product. The information is this document applies to this specific material as supplied. It may not be valid if product is used in combination with other materials. It is the user's responsibility to determine the suitability and completeness of this information for their particular use. While the information and recommendations set forth herein are believed to be accurate as of the date hereof, Calgon Carbon Corporation makes no warranty with respect to the same, and disclaims all liability for reliance thereon.

SECTION 8

OPERATING INFORMATION

SECTION 8

OPERATING INFORMATION

FIGURE 1 VESSEL V-214A TO V-214B SERIES FLOW

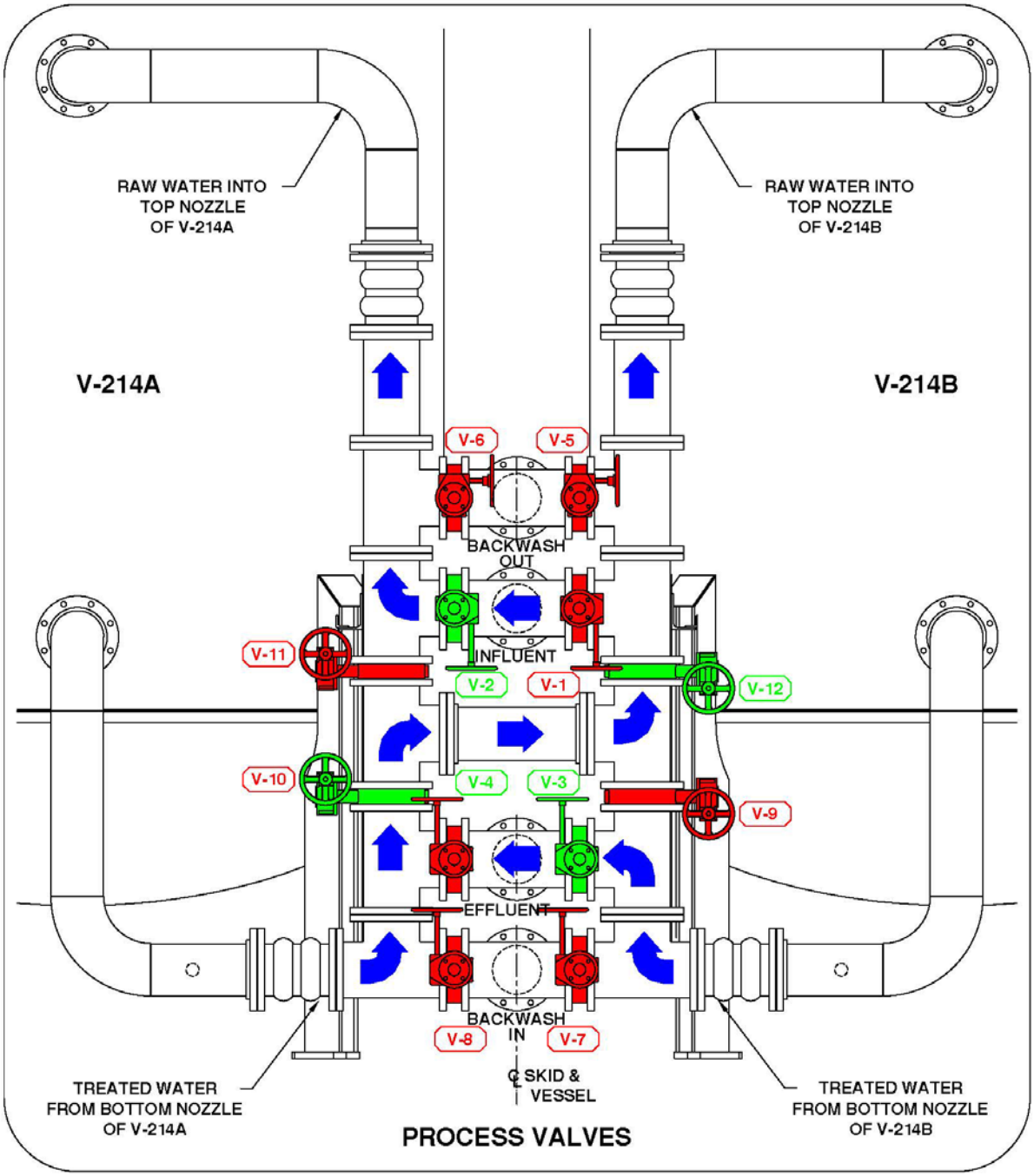

FIGURE 2 VESSEL V-214B ON-LINE VESSEL V-214A CARBON TRANSFER

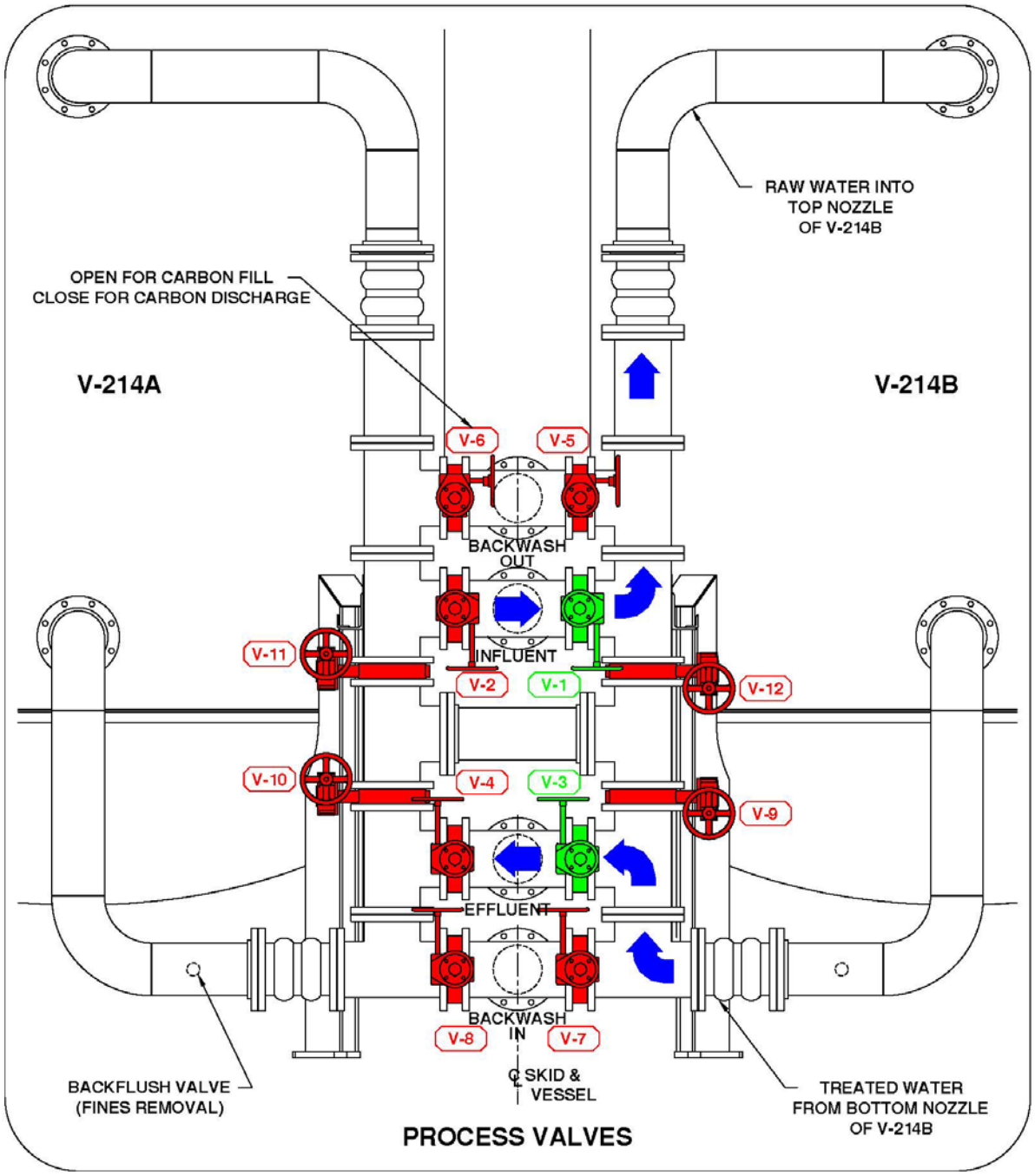

FIGURE 3 SERIES FLOW VESSEL V-214B TO V-214A

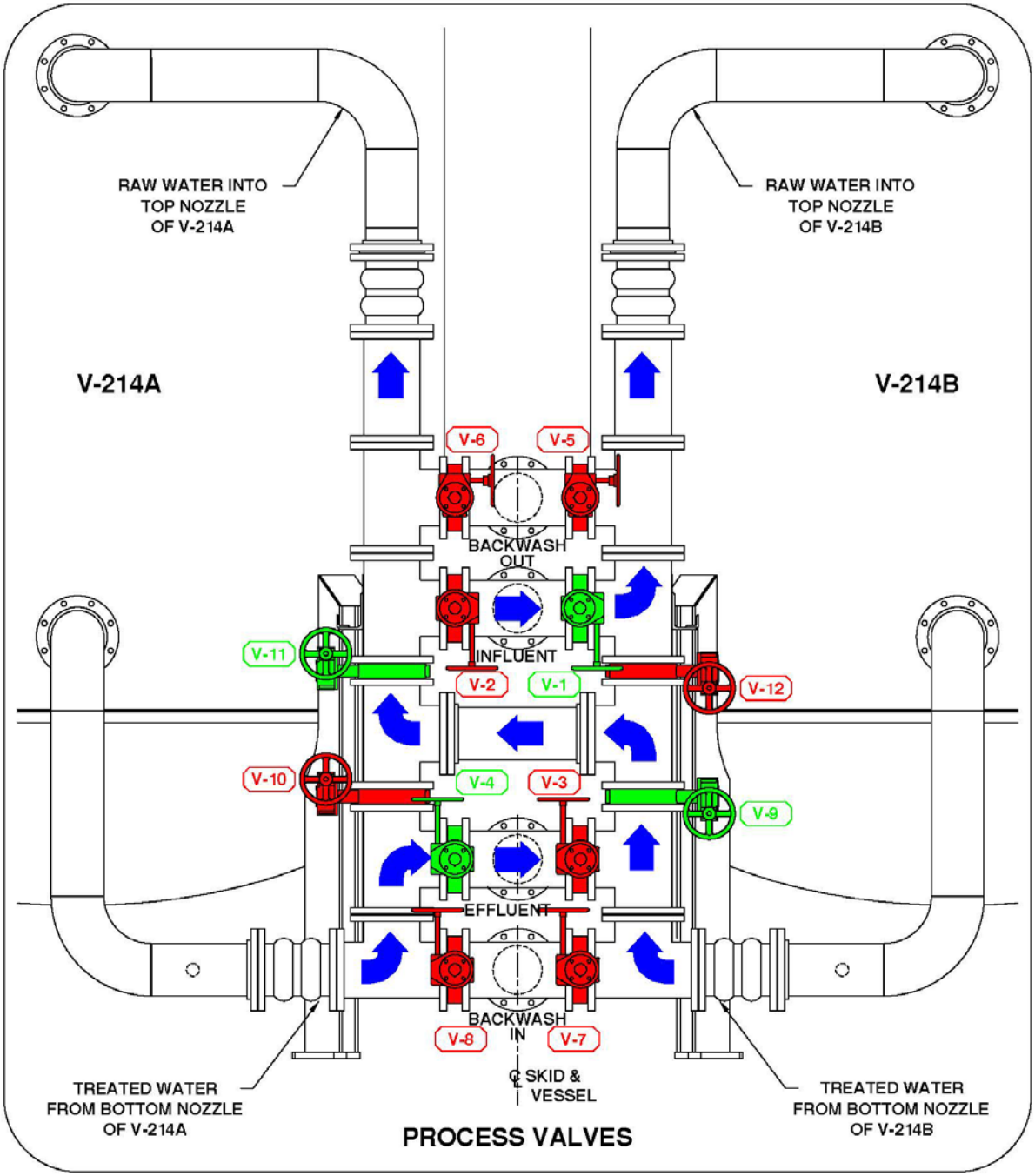

FIGURE 4 VESSEL V-214A ON-LINE VESSEL V-214B CARBON TRANSFER

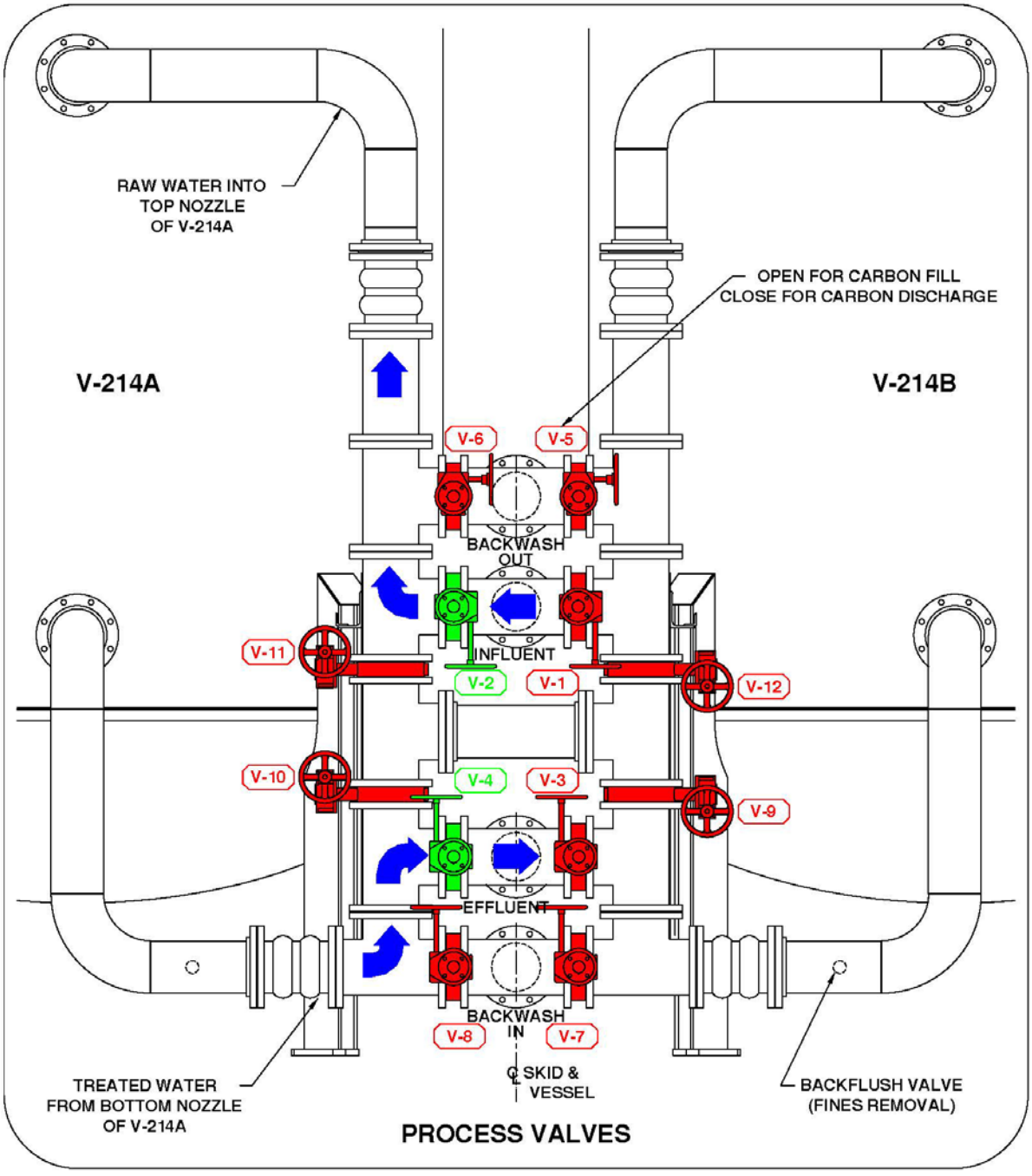

FIGURE 5 PARALLEL FLOW VESSEL V-214A AND V-214B

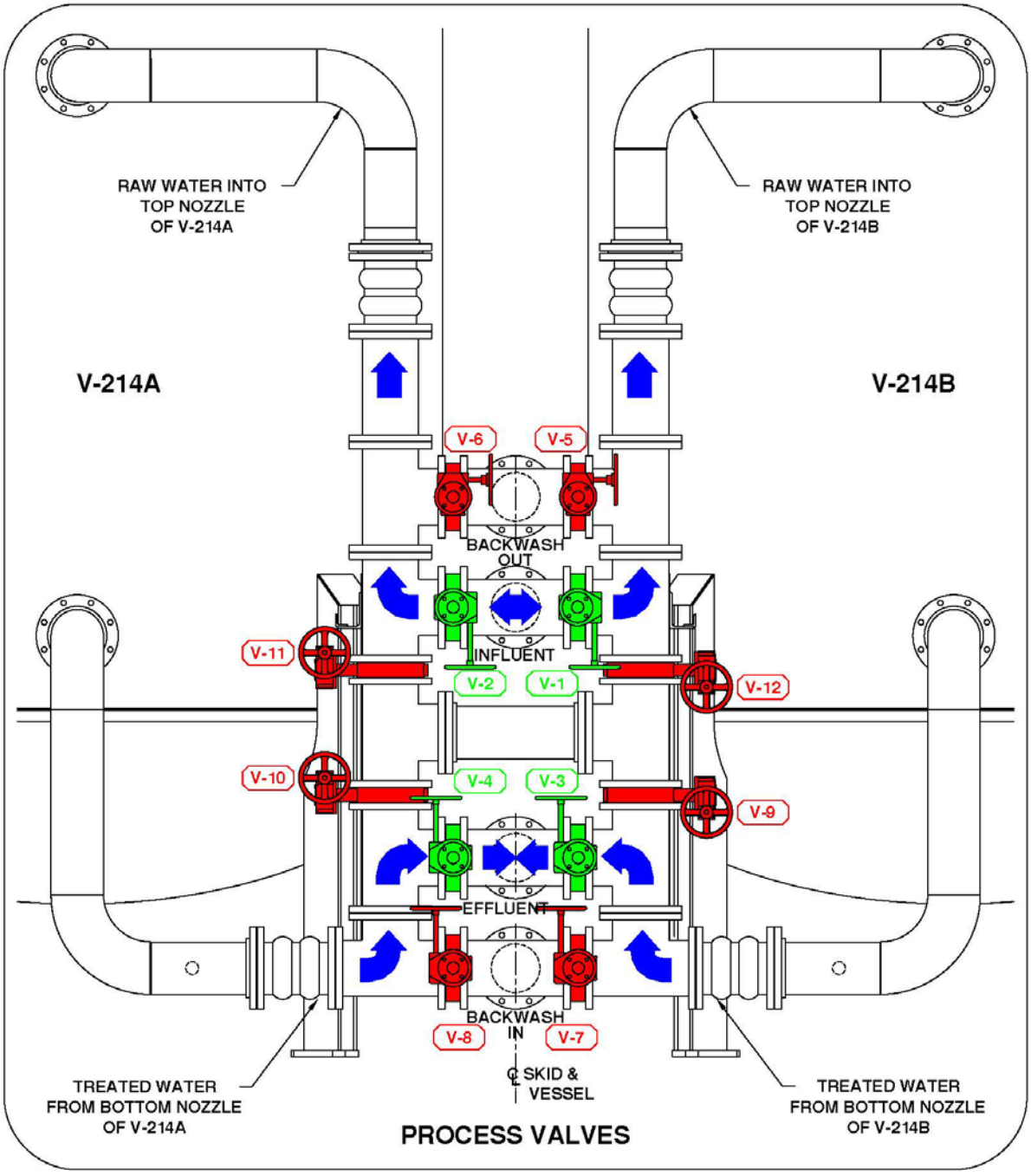

FIGURE 6 VESSEL V-214B ON-LINE VESSEL V-214A BACKWASHING

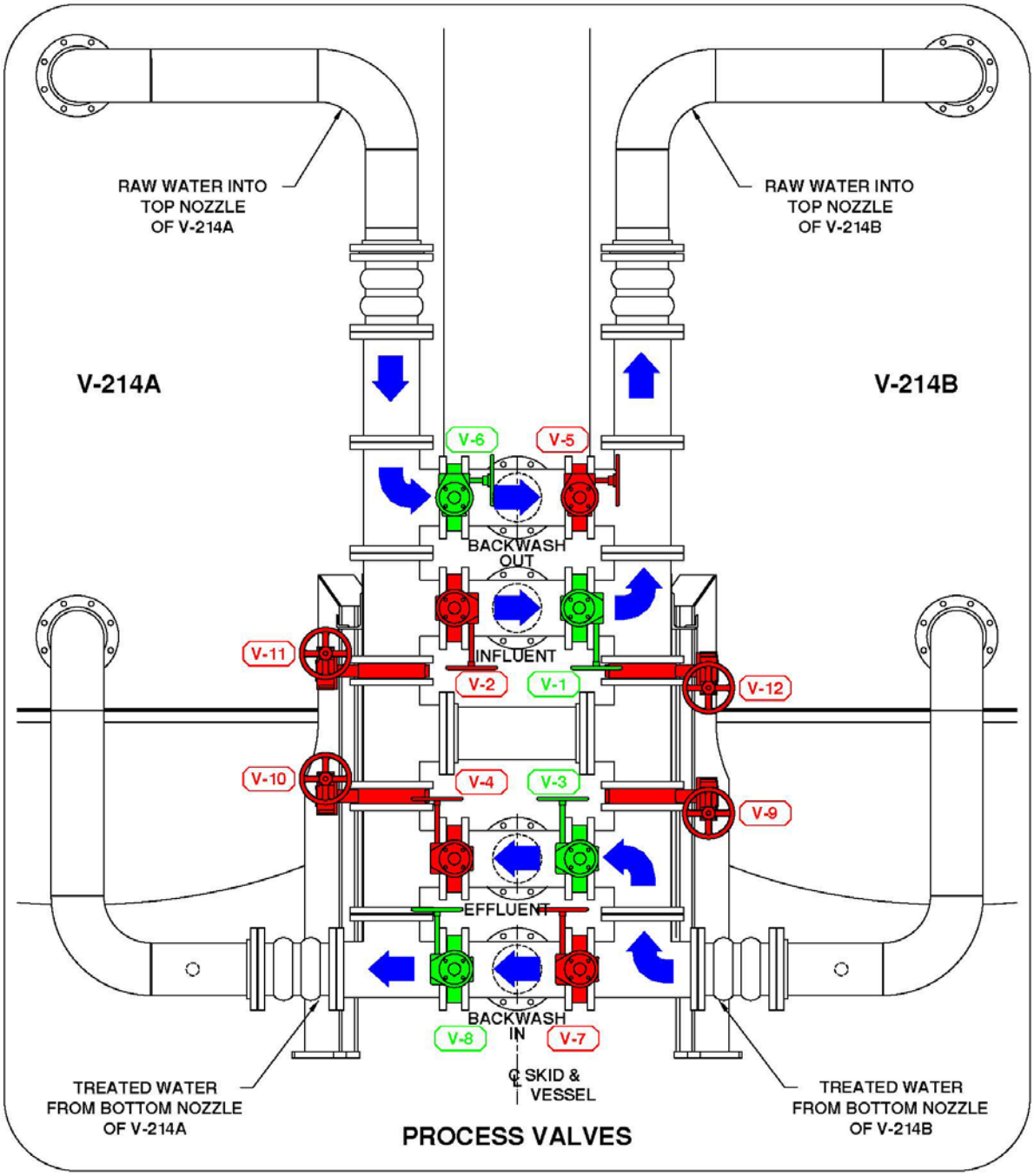

FIGURE 7 VESSEL V-214A ON-LINE VESSEL V-214B BACKWASHING

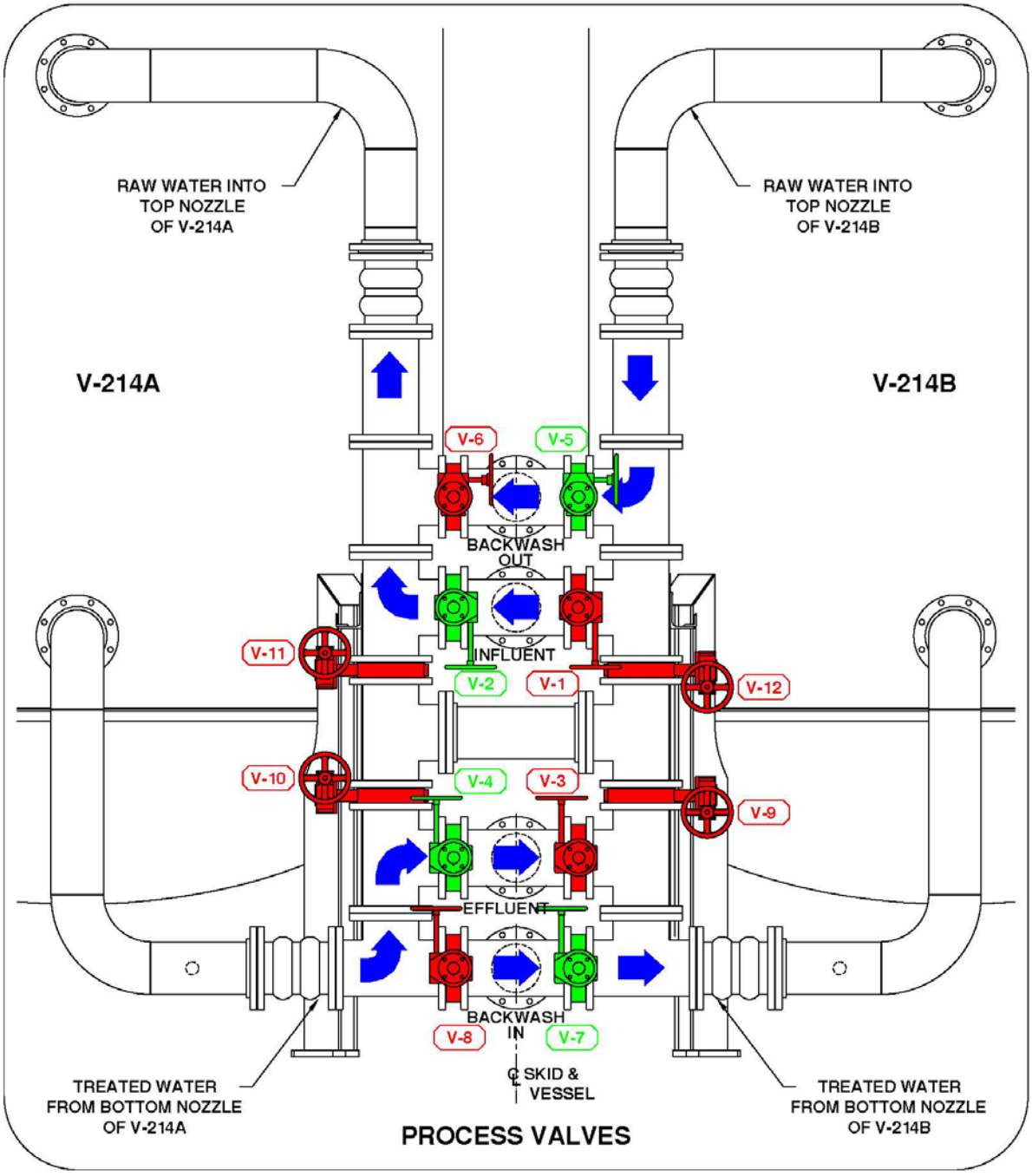

FIGURE 8 STANDARD TRAILER

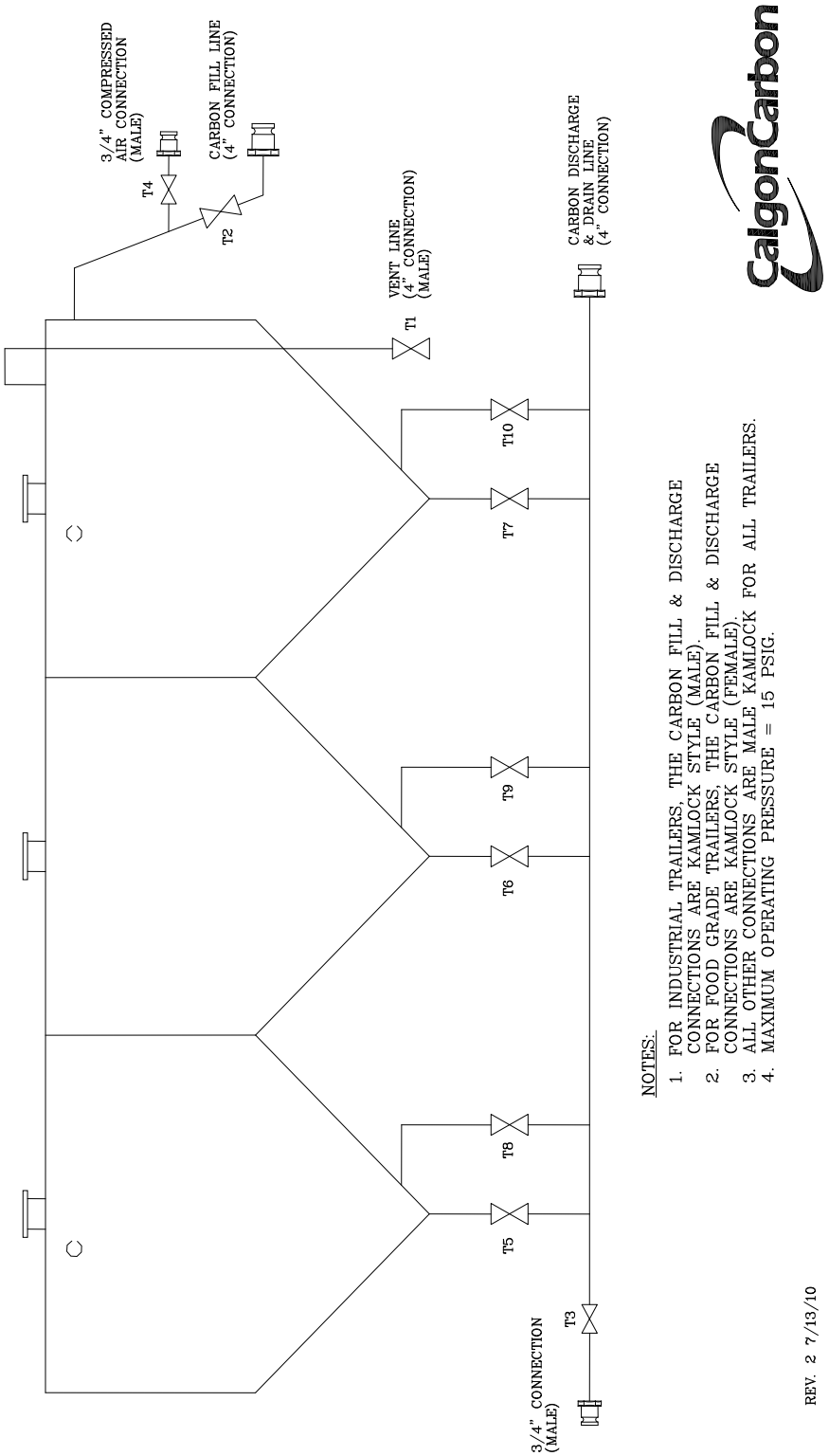

FIGURE 9 TRIPLE COMPARTMENT TRAILER

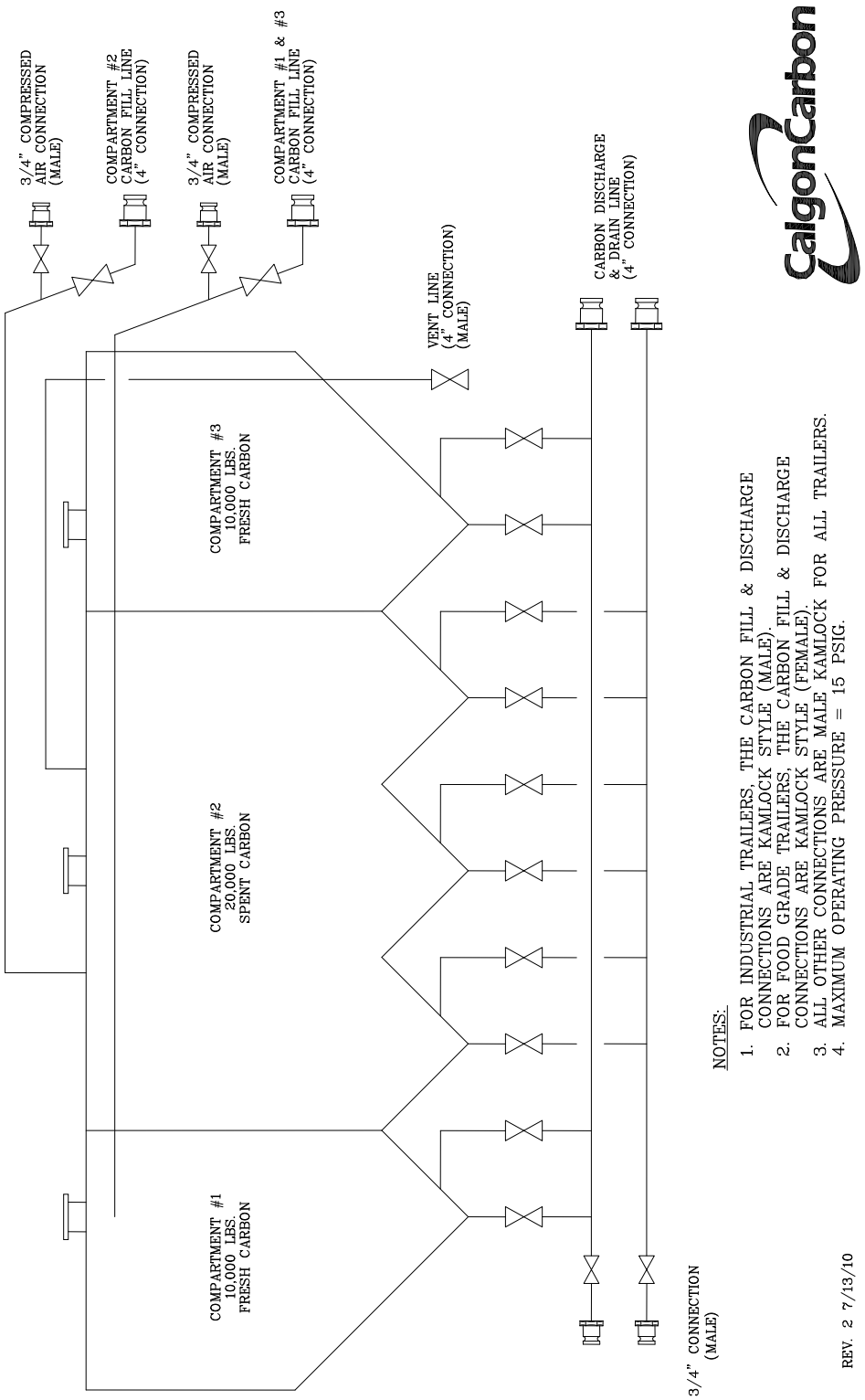

CARBON ACCEPTANCE CANISTER (CAC) INSTRUCTIONS

1. Connect the carbon acceptance canister (CAC) as shown on the drawing below. Start the adsorption system according to the operating manual. All valves in the influent and effluent lines to the CAC should be closed.

2. Open the top 2" plug on the CAC. Slowly fill the CAC with clean, hot water. If hot water is not available, ambient temperature water will be acceptable. Capacity of the CAC is approximately one (1) gallon.

3. For optimum performance, the water needs to be adsorbed into the carbon. To achieve this, allow the CAC to stand full with water for approximately 24 hours. After the water has been adsorbed, replace the plug in the top of the CAC.

4. Open both valves in the CAC effluent line. One valve, C-4, is located near the adsorption system's main effluent header and the other valve, C-3, is located near the CAC.

5. Disconnect the tubing on the CAC influent line at the isolation valve C-1 located on the system's main influent header.

6. Slowly open the CAC influent valve, C-2, to allow clean effluent water to back flow through the CAC to purge the lines and backflush the CAC. Allow about 5 gallons of clean water to flow through the CAC.

7. Close the valve, C-2, in the CAC influent line to stop the flow. Reconnect the tubing to the CAC influent isolation valve, C-1.

8.; Slowly open both of the valves in the CAC influent line to allow untreated water to flow through the CAC.

9. If the carbon adsorption system is to be backwashed or shutdown, close the influent valve, C-2, and the effluent valve, C-3, on the CAC, and open the top plug in the canister to vent the CAC. Once the adsorption system is placed back into service, tighten the plug and open the CAC influent and effluent valves.

10. The CAC should be left in service according to the following guidelines:

    a. If the adsorption system is operating in parallel mode, the CAC should be left on-line for about 1/10 th of the anticipated bed life.

    b. If the adsorption system is operating is series mode, the CAC

should be left on-line for about 1/5 th of the anticipated bed life.

11. After the CAC has been on-line for the recommended time period, it needs to be returned for carbon acceptance testing. The CAC is taken out of service by closing all of the valves in both the CAC influent and effluent lines. After the valves are closed, disconnect the effluent tubing connector at the CAC. Slowley open the top plug to vent the CAC. Slowly open the CAC effluent valve, C-3, and drain the water from the CAC to a suitable container. Ensure that all necessary safety precautions are taken depending on the hazardous nature of the process liquid. Open the CAC influent valve C-2 and carefully disconnect the tubing from the influent isolation valve, C-1, on the system header. Allow the liquid in the influent tubing to drain through the CAC and into the container.

12. Close the CAC influent valve C-2 and effluent valve C-3. Replace the top plug and remove the CAC from the adsorption system. Ship the CAC with the influent and effluent valves attached and closed. This is required to ensure that no water leaks from the CAC during shipment.

    Ship the CAC to: Calgon Carbon Corporation
    3000 GSK Drive
    Moon Township, PA 15108
    Attention: Carbon Acceptance Department

Contact the Calgon Carbon Sales Office in your area for additional information.

Unit Specifications

Max. Operating Pressure:	125 psig
Body and Septa:	PVC
Valves	PPL
Tubing	PPL
Flow Control Valve	Nickel Plated Brass

MEDIA ACCEPTANCE CANISTER

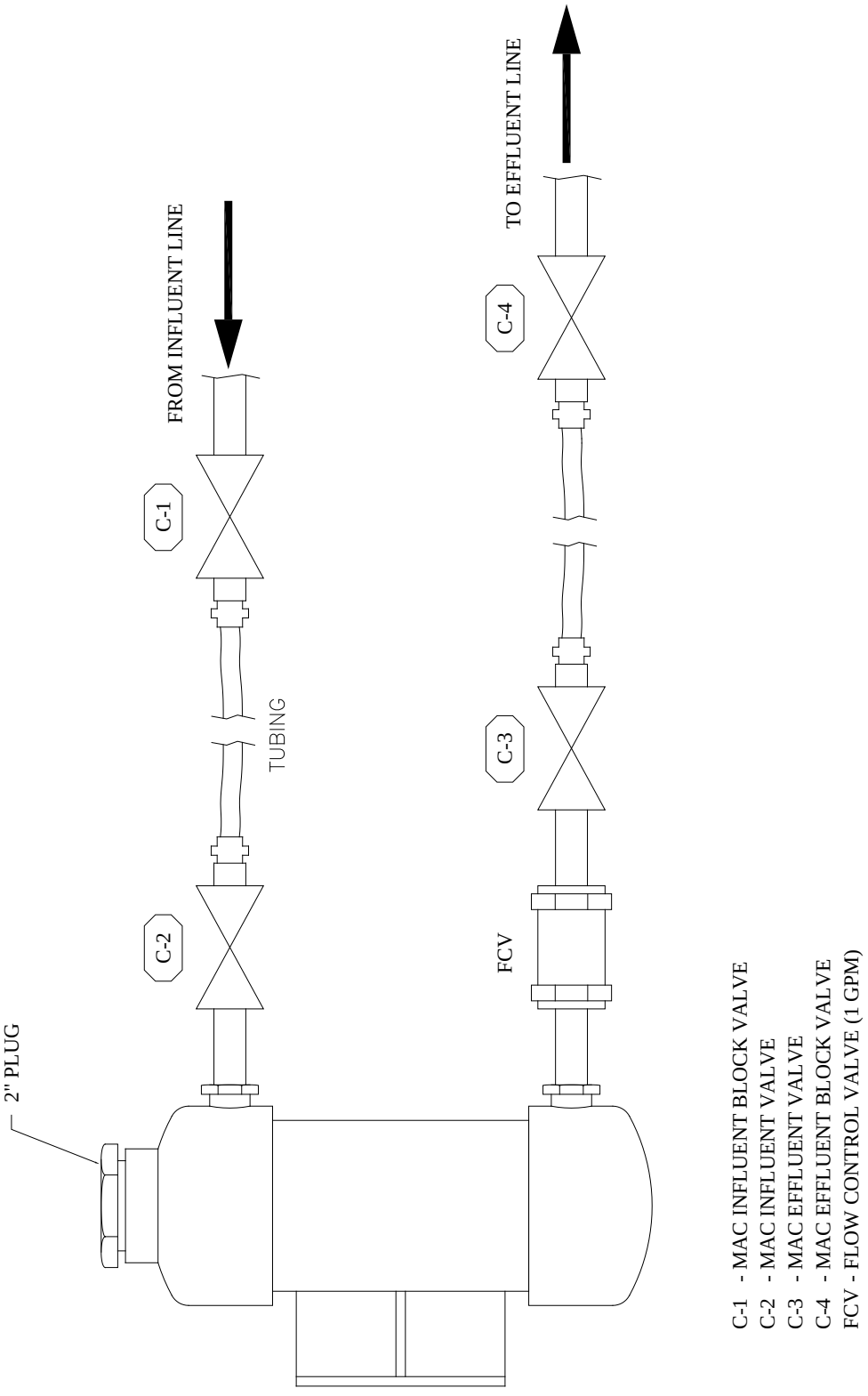

CALGON CARBON CORPORATION
SPARE PARTS PROGRAM

INTRODUCTION: Calgon Carbon Corporation has developed a standard product line of engineered treatment systems for air and water applications. Much of the fabrication, and assembly of these systems is done at Calgon Carbon's own facility; therefore most of the system parts and components are maintained in inventory. As a service to customers to provide a source of specified parts in a timely manner, these parts and components are available for purchase. Prices a valid for one year from the date on the list, after this time, the prices may be subject to revision.

ORDER ENTRY: The purchase order for spare parts should be entered using the spare parts order form provided. This form should be sent to:

Calgon Carbon Corporation
Order Service Department
P.O. Box 717
Pittsburgh, PA 15230-0717

Orders can also be placed via fax to 1-412-787-6323
Verbal orders can be placed by calling the Order Services Department at 1-412-787-6700

SHIPPING: Order shipping options are either Rush (next day delivery by UPS) or Normal (one week delivery by UPS). Other shipping directions should be requested at the time of ordering. Shipping charges will be added to the total price of the order.

SALES TAX: Sales tax will be added to the invoice unless a sales tax exemption certificate is provided with the order.

PAYMENT: An invoice will be sent to the billing address upon shipment of the order. Payment terms are net 30 days after shipment.

WARRANTY: Calgon Carbon Corporation warrants that the equipment sold hereunder shall be free of defects in material and workmanship for a period of one (1) year from the date of shipment. This warranty does not apply to problems associated with normal wear and tear, improper maintenance, negligence, misuse, abuse or failure to operate the equipment in strict accordance with the operating and maintenance plan provided. For those items provided by, but not directly manufactured by Calgon Carbon, the manufacturer=s warranty shall apply, provided warranty coverage exceeds that which is provided by Calgon Carbon. All other warranties, either expressed or implied, are hereby disclaimed, including, but not limited to, the warranty of merchantability and fitness for the particular purpose.

LIMITATIONS OF LIABILITY: The purchaser's exclusive remedy for any cause of action arising out of this transaction, including but not limited to breach of warranty, negligence and /or indemnification, is expressly limited to the maximum of the purchase price of the equipment sold hereunder. All claims of whatsoever nature shall be deemed waived unless made in writing within forty-five (45) days of the occurrence giving rise to the claim. In no event shall Calgon Carbon for any reason or pursuant to any provision of the warranty be liable for the incidental or consequential damages, or damages in excess of the purchase price of the equipment supplied, loss of profit, or fines imposed by Government agencies.

CALGON CARBON CORPORATION ♦ COPYRIGHT 2016 ♦ ALL RIGHTS RESERVED

WARRANTY

WARRANTIES: Seller warrants that the carbon adsorption system sold hereunder shall be free from defects in materials and workmanship for a period of one (1) year from the date of system start-up or eighteen (18) months from date of system shipment, whichever comes first. The warranty does not apply to problems associated with normal wear and tear, improper maintenance, negligence, misuse, or the failure to operate the system in strict accordance with the operating and maintenance plan provided. For those items provided by, but not directly manufactured by the Seller, the manufacturer's warranty shall apply provided warranty coverage exceeds that which is provided by the Seller. All other warranties, either express or implied, are hereby disclaimed including but not limited to the warranty of merchantability and fitness for a particular purpose.

Seller warrants that any/all activated carbon provided hereunder shall conform to the specifications for such grade as published from time to time by the Seller. There are no warranties made with regard to the activated carbon or system to be sold hereunder other than those contained in this paragraph or stated elsewhere in the proposal. All other warranties express or implied, are hereby disclaimed including, but not limited to, the warranty of merchantability and fitness for a particular purpose.

This warranty is limited to the replacement and/or repair by the Seller of any parts or materials which in the Seller's determination are defective. This warranty does not cover any charges by the Buyer for replacement of parts, adjustments or repairs, or any other work unless such charges shall be assumed or authorized in advance in writing by the Seller.

LIMITATION OF LIABILITY: Seller's liability and the Buyer's exclusive remedy for any cause of action arising out of this transaction, including but not limited to breach of warranty, negligence and/or indemnification is expressly limited to a maximum of the purchase price of the carbon adsorption system sold hereunder. All claims of whatsoever nature shall be deemed waived unless made in writing within forty-five (45) days of the occurrence giving rise to the claim. In no event shall the Seller for any reason or pursuant to any provision of these warranties be liable for incidental or consequential damages, or damages in excess of the purchase price of the system supplied, nor shall the Seller be liable for loss of profits or fines imposed by Governmental agencies.

FORCE MAJEURE: Except as otherwise provided hereafter, neither party shall be liable to the other party for failure to perform any of its obligations hereunder due to Act of God, accident, fire, flood, riot, war, sabotage, explosion, strike, labor disturbance, national defense requirements, governmental law, ordinance, rule or regulation, whether valid or invalid, extraordinary failure of equipment or apparatus, inability to obtain electricity or other type of energy, raw material, labor, equipment or transportation, or any similar or different contingency beyond the party's reasonable control which would make performance impractical whether or not the contingency is of the same class as those enumerated above. The party invoking Force Majeure shall provide the other party of its estimate as to when the Force Majeure condition will end. The minimum term of this agreement shall be extended by the duration of any Force Majeure period.

SECURITY INTEREST: Buyer represents that the System is equipment to be used for business, and shall remain personal property. Buyer grants the Seller a security interest in the System to secure the payment of the purchase price. Buyer will not sell, lease, transfer or encumber the System and will keep it free from any and all liens and security interests until the Seller has been paid in full and shall execute any and all necessary documents to protect such security interests.

MODIFICATION OR WAIVER OF PROVISIONS: This proposal cannot be modified except by agreement in writing signed by the Seller. A waiver or repeated waiver by the Seller of any provision or the breach of any provision shall not constitute a further waiver of such provision or breach.

ENTIRE AGREEMENT: The proposal, as signed by both parties, including the General Terms of Sale and any attachments referenced in the proposal, embodies the entire agreement between Buyer and Seller. The parties shall not be bound by or liable for any statement, representation, promise or understanding not set forth herein. Nothing contained in correspondence or discussions prior to the date of the agreement has any effect on this agreement unless specifically incorporated herein. No changes, modifications of, or additions to any portion of the agreement shall be valid unless reduced to writing, agreed to and signed by both parties, and incorporated into the agreement.

CALGON CARBON CORPORATION ♦ COPYRIGHT 2016 ♦ ALL RIGHTS RESERVED

NOTE: TO CUSTOMERS INTERESTED IN VIDEOTAPING CALGON CARBON CORPORATION REPRESENTATIVES DURING OPERATOR TRAINING SESSIONS, CARBON TRANSFERS, SYSTEM INSPECTIONS, OR OTHER SITE ACTIVITIES PRIOR WRITTEN PERMISSION FROM CALGON CARBON CORPORATION IS REQUIRED BEFORE VIDEOTAPING MAY COMMENCE.

VIDEOTAPING AGREEMENT

This agreement is made this ___ day of _____, 19___, by and between Calgon Carbon Corporation, hereinafter referred to as "CCC", a Delaware corporation and _____, (hereinafter referred to as "Owner-Operator").

In consideration for allowing Owner to videotape "CCC" personnel performing maintenance or service, or demonstrating the operation of _____ (the equipment) the Owner-Operator and "CCC" agree as follows:

The video tape is used at Owner-Operator's own risk and is not intended nor is it to be used as a substitute for safe operating procedure in accord with industry standard, training, safety instruction or the operation and maintenance manuals. CCC ASSUMES NO LIABILITY FOR THE COMPLETENESS OR ACCURACY OF THE VIDEO TAPE. ANY CLAIM FOR INJURY OR PROPERTY DAMAGE WHICH ARISES OUT OF OR IN CONNECTION WITH THE USE OF THE VIDEO TAPE BY THE OWNER-OPERATOR, ITS EMPLOYEES, OR AGENTS IS THE SOLE RESPONSIBILITY OF THE OWNER-OPERATOR.

OWNER-OPERATOR AGREES TO HOLD CCC HARMLESS AND PAY ALL LEGAL EXPENSESAND JUDGEMENTS INCLUDING PUNITIVE DAMAGES, RESULTING FROM LITIGATION WHERE THE TAPE IS ENTERED INTO EVIDENCE.

This tape is for the Owner-Operators own use, and the Owner agrees to not sell or transfer the tape to any other party.

CCC must receive a copy of the tape and reserves the right to final edit the tape at Owner-Operator's expense.

Owner-Operator must affix the label CCC provides to ALL the tapes and read the following statement on the tape both at the beginning and end of the taped presentation.

THIS IS NOT A CCC TRAINING OF SAFETY INSTRUCTION TAPE. FOR SAFETY OR TRAINING INSTRUCTIONS YOU MUST CONSULT THE OPERATION AND MAINTENANCE MANUAL AND/OR CCC PERSONNEL, AND FOLLOW SAFE OPERATING PROCEDURE IN ACCORD WITH INDUSTRY STANDARDS

Notwithstanding the reasonableness of the agreements herein, in the event that a court of competent jurisdiction determines that any part of the agreement set forth in paragraphs 1, 2, 3, 4, and 5 be held invalid or unenforceable, the provisions of this video agreement shall be deemed severable, and the remaining parts shall be valid and enforceable as though the invalid and unenforceable parts had not been included in the agreement.

When this agreement is accepted and signed by the Owner-Operator and accepted by CCC the video taping may start. It is understood that Owner-Operator's camera operator will not hinder or distract CCC personnel during their work.

Accepted by: _____ *Accepted by:* _____
(Owner-Operator)

_____ _____
(Signature) *(Signature)*

_____ _____
(Position) *(Position)*

By signing this, the signer is verifying they have authorization to make such agreements binding on the Owner-Operator.

Pressure Drop Curve
Model 10, 20,000 # OLC 12 x 40 Carbon, 8" Piping
60 deg. F., 80 spec. 22.106 septas

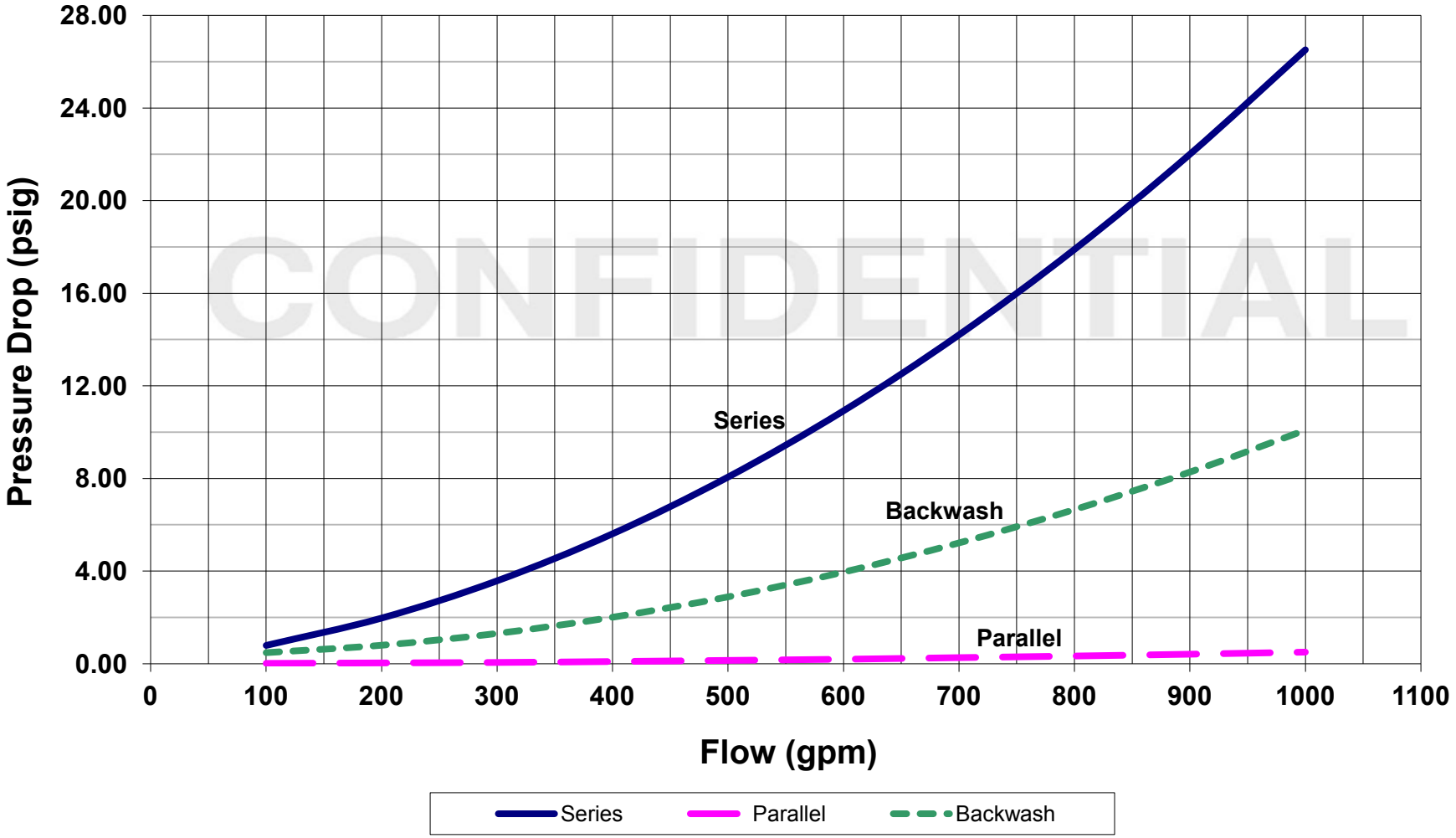

Wetting Times for GAC
80° F. Water

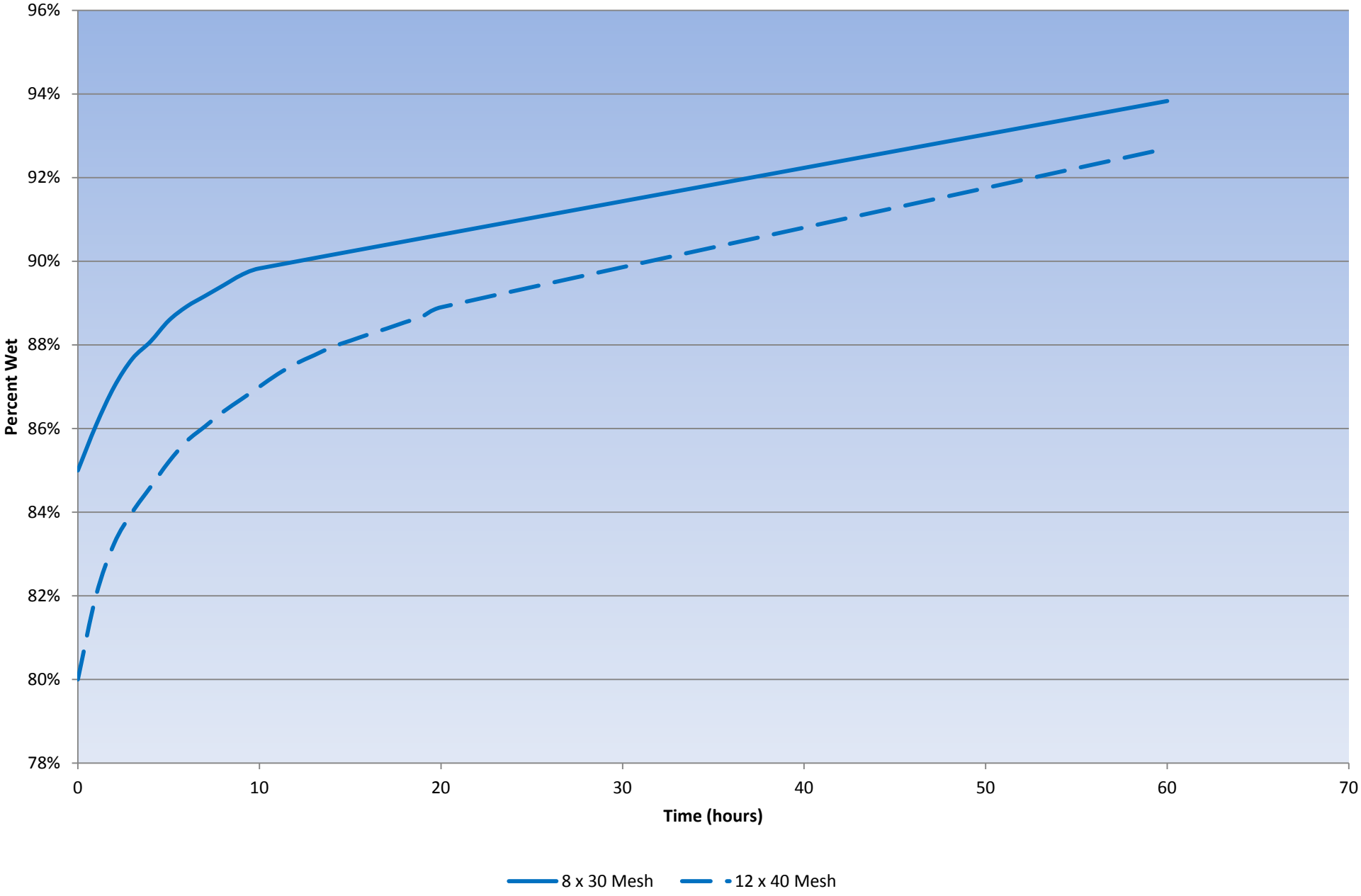

Bed Expansion Curve

Water at 60F, 12 x 40 Mesh Coconut GAC

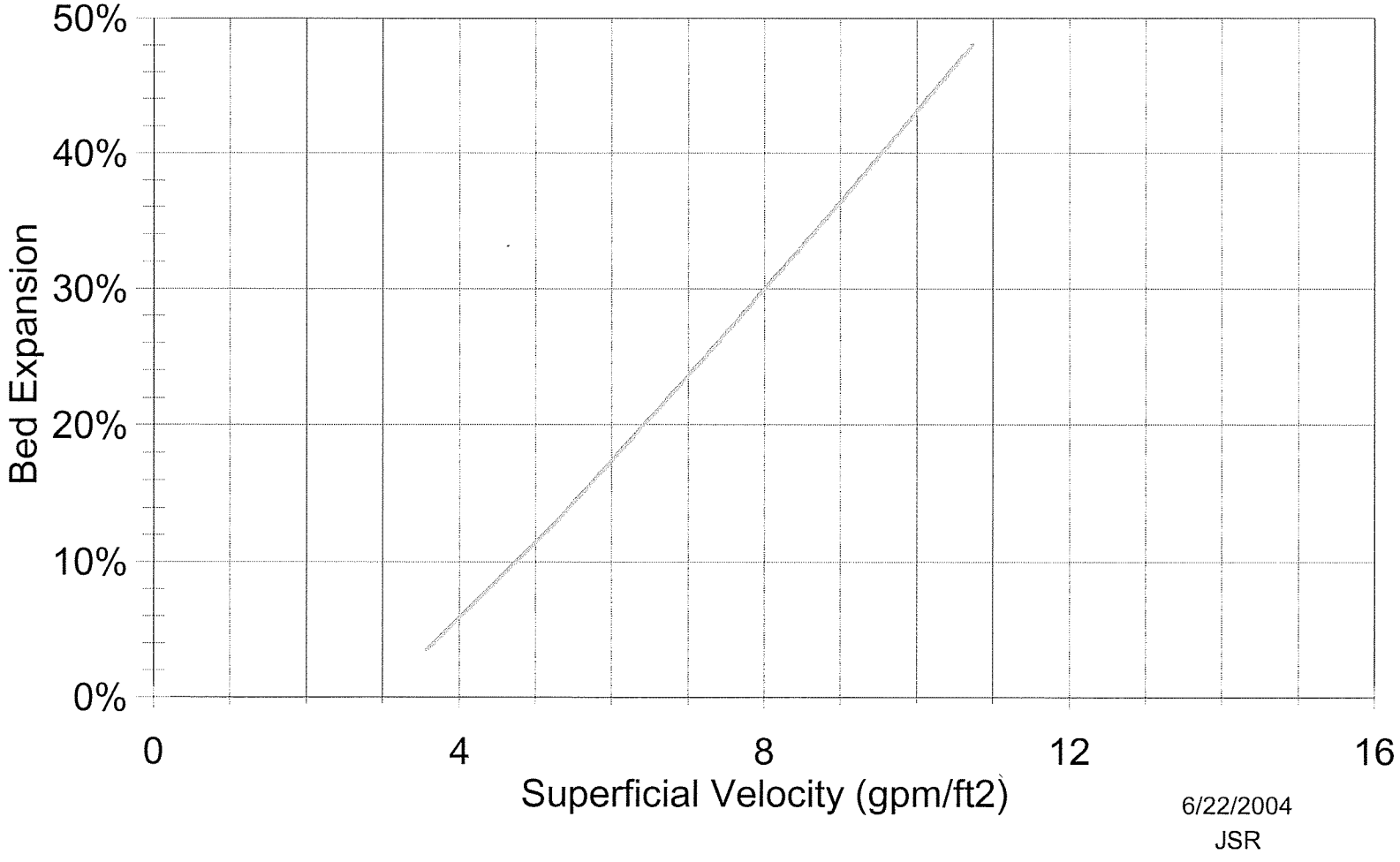

6/22/2004
JSR

Disinfection Of Granular Activated Carbon

CALGON CARBON CORPORATION

Introduction

There are situations where it becomes necessary to disinfect granular activated carbon (GAC) beds due to the presence of bacteria. The bacteria are usually present because of oxygen depletion in wastewater and potable water applications, and low temperatures (>140ºF) in food-related applications (sugars, etc.). The procedure described below is intended for in situ disinfection of carbon in an adsorber containing 20,000 pounds of GAC. By adjusting the amount of sodium hydroxide, larger or smaller carbon beds can be disinfected with this procedure.

Caution Due to the hazardous nature of sodium hydroxide (NaOH) and hydrochloric acid (HCl), appropriate protective clothing such as a face shield, goggles, gloves and impervious clothing must be worn when handling these chemicals. For specific instructions, refer to your plant procedures and/or material safety data sheets for these chemicals. Materials of construction must be compatible with NaOH and HCl.

Disinfection

1. Take the adsorber off line and make sure that a line on top of the adsorber is open to serve as a vent.
2. Drain the water from the adsorber through the adsorber effluent line.
3. Pump 5% sodium hydroxide into the adsorber through the effluent line. For Calgon Carbon's backwashable Model 10 and Model 12 adsorbers, the required volumes are 7,000 and 6,000 gallons, respectively. See step 9a for an alternate procedure.
4. Stop pumping when the NaOH solution overflows through the vent line.
5. Allow the carbon to soak in the sodium hydroxide for at least four hours.
6. Drain NaOH solution from the adsorber through the adsorber effluent line.

Neutralization

7. Wash the carbon by adding contaminant-free or clean water through the effluent line for 7-10 hours at a flow of 1.3-3 gpm/ft^2 in order to wash out the residual sodium hydroxide and neutralize the carbon. The disinfection is then complete.

8a. An alternate, faster procedure for neutralizing the carbon includes acid treatment. After the sodium hydroxide solution is drained from the adsorber, pump 5 gallons of reagent grade hydrochloric acid (37% HCl) into the adsorber through the effluent line.

8b. Fill the adsorber with clean water by backfilling through the effluent line at 3-5 gpm/ft^2 so as to thoroughly mix the content of the adsorber. Shut off the backfill water when it begins to overflow through the vent line.

8c. Allow the carbon to soak for 60 minutes, then drain the adsorber. Check the pH of the water, which should be in the range of 8 to 10.

8d. Wash the carbon by adding clean water through the effluent line at a rate of 1.3-3 gpm/ft^2 until the pH of the effluent water matches the influent water or within desired pH range. Disinfection is then complete.

Alternate Disinfection Procedure

9a. After step 2, add ~ 1,000 gallons of clear water through the effluent line.

9b. After completing step 9a, pump the contents of two 55-gallon drums of 50% sodium hydroxide into the adsorber through the effluent line.

9c. Fill the adsorber with clean water by backfilling through the effluent line at 3-5 gpm/ft^2 so as to thoroughly mix the contents of the adsorber.

9d. Shut off the backfill water when it begins to overflow through the vent line. Check the pH of the water exiting the vent line. It should be 13 or higher.

10. Go to step 5.

Safety Message

Wet activated carbon preferentially removes oxygen from air. In closed or partially closed containers and vessels, oxygen depletion may reach hazardous levels. If workers are to enter a vessel containing carbon, appropriate sampling and work procedures for potentially low oxygen spaces should be followed, including all applicable Federal and State requirements.

CALGON CARBON CORPORATION

Making Water and Air Safer and Cleaner

Calgon Carbon Corporation
P.O. Box 717
Pittsburgh, PA USA 15230-0717
1-800-422-7266
Tel: 412-787-6700
Fx: 412-787-6713

Chemviron Carbon
European Operations of
Calgon Carbon Corporation
Zoning Industriel C de Feluy
B-7181 Feluy, Belgium
Tel: + 32 (0) 64 51 18 11
Fx: + 32 (0) 64 54 15 91

Calgon Carbon Asia
65 Chulia Street
#37-03 OCBC Centre
Singapore 049513
Tel: +65 6 221 3500
Fx: +65 6 221 3554

Your local representative

Copyright© 2005 Calgon Carbon Corporation, all rights reserved.

FORM U-1A MANUFACTURER'S DATA REPORT FOR PRESSURE VESSELS

(Alternative Form for Single Chamber, Completely Shop or Field Fabricated Vessels Only)

As Required by the Provisions of the ASME Boiler and Pressure Vessel Code Rules, Section VIII, Division 1

1. Manufactured and certified by Calgon Carbon Corporation, 4301 Grand Avenue, Neville Island, Pennsylvania, 15225
(Name and address of Manufacturer)

2. Manufactured for Techsas Inc., 4819 West Bayshore Drive, Bacliff, Texas, 77518
(Name and address of Purchaser)

3. Location of Installation Kirtland Air Force, UNKNOWN, Albuqquerque, New Mexico, 87105
(Name and address)

4. Type vertical tank (Horizontal or vertical, tank) | V-214A to V-214B (Manufacturer's serial number) | N/A (CRN) | 91157783 REV.2 and 91157785 REV.1 (Drawing number) | 1646-1647 (National Board number) | 2016 (Year built)

5. ASME Code, Section VIII, Division 1 | 2015/ N/A [Edition and Addenda, if applicable (date)] | N/A (Code Case numbers) | N/A (Special service per UG-120(d))

6. Shell: SA-516 Gr. 70 (Material spec. number, grade) | 0.5000 in (Nominal thickness) | 0.0000 in (Corr. allow.) | 9' 11.0000" (ID) (Inner diameter) | 11' 8.0000" [Length (overall)]

Body Flanges on Shells												
No.	Type	ID	OD	Flange Thk	Min Hub Thk	Material	How Attached	Location	Bolting			
									Num & Size	Bolting Material	Washer (OD, ID, thk)	Washer Material
0	0	0.0"	0.0"	0	0	0	0	0	0 - 0	0	0	0

7. Seams: Welded Type 1 [Long. (welded, dbl., sngl., lap, butt)] | Spot [R.T.(spot or full)] | 85% (Eff.,%) | N/A (H.T. temp) | N/A (Time, hr) | Welded Type 1 [Girth. (welded, dbl., sngl., lap, butt)] | Spot [R.T. (spot or full)] | 100% (Eff., %) | 1 (No. of courses)

8. Heads: (a) Material SA-516 Gr.70 (Spec. no., grade) (b) Material SA-516 Gr.70 (Spec. no., grade)

	Location (Top, Bottom, Ends)	Minimum Thickness	Corrosion Allowance	Crown Radius	Knuckle Radius	Elliptical Ratio	Conical Apex Angle	Hemispherical Radius	Flat Diameter	Side to Pressure (Convex or Concave)
(a)	Top	0.4375	0.0000	0.0000"	0.0000	2:1	0	0.0000"	00000	Concave
(b)	Bottom	0.4375	0.0000	0.0000"	0.0000	2:1	0	0.0000"	00000	Concave

Body Flanges on Heads												
	Location	Type	ID	OD	Flange Thk	Min Hub Thk	Material	How Attached	Bolting			
									Num & Size	Bolting Material	Washer (OD, ID, thk)	Washer Material
(a)	N/A	N/A	N/A	N/A	N/A	N/A	N/A	N/A		N/A	N/A	N/A

9. MAWP 125 psi (Internal) None (External) at max. temp. 140 °F (Internal) None (External)

Min. design metal temp. -20 °F at 125 psi . Hydro, pneu., or comb. test pressure HYDRO AT 163 psi .

Proof test N/A .

10. Nozzles, inspection and safety valve openings:

Purpose (Inlet, Outlet, Drain, etc.)	No.	Diameter or Size	Type	Material		Nozzle Thickness		Reinforcement Material	Attachment Details		Location (Insp. Open.)
				Nozzle	Flange	Nom.	Corr.		Nozzle	Flange	
Carbon Outlet Inlet	2	4"	FFSO	SA-106B	SA-105	0.5310	xxxx	xxxx	UW-16.1(e)	xxx	Head
Influent / Effluent	2	8"	FFSO	SA-106B	SA-105	0.5000	xxxx	xxxx	UW-16.1(e)	xxx	Shell
Manway	1	20"	FFSO	SA-106B	SA-105	0.5930	xxxx	SA-516 70	UW-16.1(e)	xxx	Shell
Manway	1	14" X 18"	Elliptical	SA-106C	SA-516 Gr. 70	1.0000	xxxx	xxxx	UW-16.1	(y-1)	Head
Sample Point	3	2"	FFSO	SA-106B	SA-105	0.1540	xxxx	xxxx	UW-16.1(e)	xxx	Shell
Air Release	1	2"	FFSO	SA-106B	SA-105	0.1540	xxxx	xxxx	UW-16.1(e)	xxx	Shell
xxx	x	x	x	x	x	x	x	x	x	x	x
xxx	x	x	x	x	x	x	x	x	x	x	x
xxx	x	x	x	x	x	x	x	x	x	x	x
xxx	x	x	x	x	x	x	x	x	x	x	x

Additional Nozzles - See Attached U-4...

11. Supports: Skirt None (Yes or no) Lugs 4 (Number) Legs 4 (Number) Other 8 clips (Describe) Attached Head / Shell and welded (Where and how)

12. Remarks: Manufacturer's Partial Data Reports properly identified and signed by Commissioned Inspectors, have been furnished for the following items of the report:

N/A

(Name of part, item number, Manufacturer's name and identifying stamp)

Hydro Test in vertical position - impact testing exempt per UG-20 (f) & UCS-66 (b)- over pressure protection provided by others.

FORM U-1A (Back)

NB Number 1646-1647

CERTIFICATE OF SHOP/FIELD COMPLIANCE

We certify that the statements made in this report are correct and that all details of design, material, construction, and workmanship of this vessel conform to the ASME BOILER AND PRESSURE VESSEL CODE, Section VIII, Division 1. "U" Certificate of Authorization Number 27471 expires December 24, 2017.

Date 07/27/2016 Co. name **Calgon Carbon Corporation** (Manufacturer) Signed (Representative)

CERTIFICATE OF SHOP/FIELD INSPECTION

Vessel constructed by **Calgon Carbon Corporation** at **4301 Grand Avenue, Neville Island, Pennsylvania, 15225**

I, the undersigned, holding a valid commission issued by The National Board of Boiler and Pressure Vessel Inspectors and employed by Arise, of Brecksville,OH

have inspected the component described in this Manufacturer's Data Report on July 27, 2016, and state that, to the best of my knowledge and belief, the Manufacturer has constructed this pressure vessel in accordance with ASME BOILER AND PRESSURE VESSEL CODE, Section VIII, Division 1. By signing this certificate neither the Inspector nor his/her employer makes any warranty, expressed or implied, concerning the pressure vessel described in this Manufacturer's Data Report. Furthermore, neither the Inspector nor his/her employer shall be liable in any manner for any personal injury or property damage or a loss of any kind arising from or connected with this inspection.

Date 07/27/2016 Signed (Authorized Inspector) Commissions 15002A [National Board (incl. endorsements)]

FORM U-4 MANUFACTURER'S DATA REPORT SUPPLEMENTARY SHEET

As Required by the Provisions of the ASME Boiler and Pressure Vessel Code Rules, Section VIII, Division 1

1. Manufactured and certified by Calgon Carbon Corporation, 4301 Grand Avenue, Neville Island, Pennsylvania, 15225
(Name and address of Manufacturer)

2. Manufactured for Techsas Inc., 4819 West Bayshore Drive, Bacliff, Texas, 77518
(Name and address of Purchaser)

3. Location of installation Kirtland Air Force, UNKNOWN, Albuqquerque, New Mexico, 87105
(Name and address)

4. Type vertical tank (Horizontal, vertical, or sphere) | N/A (Tank, separator, heat exch., etc.) | V-214A to V-214B (Manufacturer's serial number)

N/A (CRN)	91157783 REV.2 and 91157785 REV.1 (Drawing number)	1646-1647 (National Board number)	2016 (Year built)

Data Report Item Number | Remarks

Purpose (Inlet, Outlet, Drain, etc.)	No.	Diameter or Size	Type	Material		Nozzle Thickness		Reinforcement Material	Attachment Details		Location (Insp. Open.)
				Nozzle	Flange	Nom.	Corr.		Nozzle	Flange	
xxx	x	x	x	x	x	x	x	x	x	x	x
xxx	x	x	x	x	x	x	x	x	x	x	x
xxx	x	x	x	x	x	x	x	x	x	x	x
xxx	x	x	x	x	x	x	x	x	x	x	x
xxx	x	x	x	x	x	x	x	x	x	x	x
xxx	x	x	x	x	x	x	x	x	x	x	x
xxx	x	x	x	x	x	x	x	x	x	x	x
xxx	x	x	x	x	x	x	x	x	x	x	x
xxx	x	x	x	x	x	x	x	x	x	x	x
xxx	x	x	x	x	x	x	x	x	x	x	x
xxx	x	x	x	x	x	x	x	x	x	x	x
xxx	x	x	x	x	x	x	x	x	x	x	x
xxx	x	x	x	x	x	x	x	x	x	x	x
xxx	x	x	x	x	x	x	x	x	x	x	x
xxx	x	x	x	x	x	x	x	x	x	x	
xxx	x	x	x	x	x	x	x	x	x	x	x
xxx	x	x	x	x	x	x	x	x	x	x	x
xxx	x	x	x	x	x	x	x	x	x	x	x
xxx	x	x	x	x	x	x	x	x	x	x	x
xxx	x	x	x	x	x	x	x	x	x	x	x
xxx	x	x	x	x	x	x	x	x	x	x	x
xxx	x	x	x	x	x	x	x	x	x	x	x
xxx	x	x	x	x	x	x	x	x	x	x	x
xxx	x	x	x	x	x	x	x	x	x	x	x

Certificate of Authorization: Type "U" No. 27471 Expires December 24, 2017

Date 07/27/2016 Name **Calgon Carbon Corporation** (Manufacturer) Signed Theresa Lochrie (Representative)

Date 07/27/2016 Name Mark Gouit (Authorized Inspector) Commissions: 15002A [National Board (incl. endorsements)]

SECTION 9

SPECIFICATIONS AND CATALOG CUT SHEETS

AL SERIES

Air and Vacuum Valves

Crispin Air and Vacuum Valves

Valve Function

- Allows large quantities of air to be vented from systems being filled with liquid
- Features Vacuum Function

Features

- Meets AWWA C-512
- Peripheral guide system for unobstructed closure
- Drip tight closure
- Standard Buna-N seating material
- Available in sizes 1/2” thru 24”

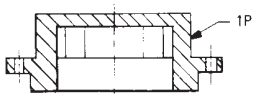

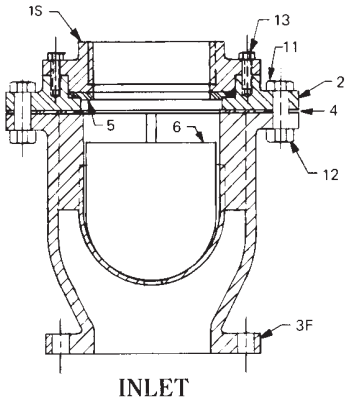

INLET

With Stainless Steel Trim

The Crispin Air and Vacuum Unit, with its orifice the same diameter as its inlet, allows large quantities of air to be vented from systems being filled with liquid. The same holds true in reverse for vacuum conditions when the system is drained.

Its design is such that the velocity of air passing through the valve will not blow the float shut at normal design volumes. It will not close until the arrival of liquid in the valve, and will not open to vent accumulating air as long as the system is under pressure and in operation.

Air and Vacuum Valves are available with stainless steel floats and either standard top or protectop in sizes up to and including 24.” All CRISPIN Air and Vacuum Valves have also guides which direct the float onto the seat upon closure. These guides are peripheral to the float, and fixed to the body or the cup and hanger assembly.

This peripheral guide system allows unobstructed closure because there are no guide bushings to collect dirt and then bind, and there are no shafts to bend or deform, which would prevent a drip tight seal.

Parts List for Air & Vacuum 1” – 24”

PART NO.	ITEM	MATERIAL (standard)
1S*	Top	Cast Iron
1P*	Protectop	Cast Iron
2	Flange	Cast Iron
3	Body, Screwed	Cast Iron
3F*	Body, 125 (1”-4” Threaded) ANSI Flanged	Cast Iron
3FH*	Body, 250 ANSI Flanged	Cast Iron
4	Gasket	Armstrong
5	Seat	Buna-N Rubber
6S	Float	Stainless Steel
11	Bolt	Steel
12	Nut	Steel
13	Bolt	Steel
14* (not shown)	Domed Screened Hood	HRCQ Steel

* Part No.’s 1P, 1S, 3F, 3FH and 14 are at customer’s option
For ease of maintenance, some of the above parts are provided as kits or assemblies.
Note: Prices and Materials are Subject to Change Without Notice

AL Crispin Valve, 600 Fowler Ave., Berwick, PA 18603 • 1-800-AIR-VALV • T: (570) 752-4524 • F: (570) 752-4962 • WWW.CRISPINVALVE.COM • sales@crispinvalve.com

Crispin Air and Vacuum Valves

Air and Vacuum Valve Detail*

MODEL	INLET	OUTLET	TRIM	HEIGHT	WIDTH	WEIGHT (lbs)
A5	1/2" NPT	1/2" NPT	IBBT	4 7/8"	4 3/4"	7
AL10	1" NPT	1" NPT	S/S	6 1/8"	6 1/4"	16
AL20	2" NPT	2" NPT	S/S	9 1/2"	8 3/4"	42
AL21	2" 125# Flg.	2" NPT	S/S	13 1/8"	8 3/4"	48
AL22	2" 250# Flg.	2" NPT	S/S	13 3/8"	8 3/4"	48
AL30	3" NPT	3" NPT	S/S	11 5/8"	11 1/2"	92
AL31	3" 125# Flg.	3" NPT	S/S	15 3/4"	11 1/2"	112
AL32	3" 250# Flg.	3" NPT	S/S	15 15/16"	11 1/2"	120
AL40	4" NPT	4" NPT	S/S	14 1/2"	14"	154
AL41	4" 125# Flg.	4" NPT	S/S	17 5/16"	14"	170
AL42	4" 250# Flg.	4" NPT	S/S	17 13/16"	14"	181
AL61	6" 125# Flg.	6" NPT	S/S	15 13/16"	15"	174
AL62	6" 250# Flg.	6" NPT	S/S	16 1/4"	15"	195
AL81	8" 125# Flg.	8" NPT	S/S	18 1/16"	17 3/4"	265
AL82	8" 250# Flg.	8" NPT	S/S	18 9/16"	17 3/4"	295
AL101	10" 125# Flg.	10" NPT	S/S	22 1/16"	21"	500
AL102	10" 250# Flg.	10" NPT	S/S	22 3/4"	21"	550
ALI21	12" 125# Flg.	12" hooded	S/S	28 1/2"	28"	725
AL122	12" 250# Flg.	12" hooded	S/S	30"	28"	778
AL141	14" 125# Flg.	14" hooded	S/S	31 1/2"	30"	970
AL142	14" 250# Flg.	14" hooded	S/S	32 1/4"	30"	1,157
AL161	16" 125# Flg.	16" hooded	S/S	36 1/2"	32 3/4"	1,025
AL162	16" 250# Flg.	16" hooded	S/S	37 1/2"	32 3/4"	1,115

Crispin valves are hydrostatically tested at 150% of their maximum working pressure.

*Consult factory for sizes above 16".

Submittal Sheet for Crispin AL Series

1”–4” Air & Vacuum Valve

Manufactured in compliance with ANSI/AWWA C512 **Date: October, 2001**

SUBMITTAL SHEET FOR AL SERIES

Specifications

Air & Vacuum Valve(s) shall be installed at high points in the main line or as directed by the engineer to release the air in the main during filling, or allow it to enter the system when draining, or when the system is subject to negative pressure.

The valve(s) shall operate by sealing the Buna-N rubber outlet seat with a peripheral float as the liquid enters the valve chamber to raise the float. All Crispin Valves are hydrostatically tested at 150% of their maxiumum working pressure.

1”-4”—The valve(s) shall be constructed with a cast iron body, and top flange with stainless steel trim, and shall have a_____” NPT screwed inlet and outlet, or ANSI Class (125, 250) flanged inlet with NPT screwed outlet. The peripheral guided float shall be stainless steel.

The valve(s) shall be Crispin Model_____, as manufactured by Crispin-Multiplex Manufacturing Co., Berwick, PA.

Option: A protectop shall be supplied to prevent debris from entering the outlet of the valve.

Option: [Where pressures are greater than 300 PSIG.] the valves shall be ANSI Class_____flanged inlet connection and shall have a (steel, stainless steel, or ductile iron) body, top and inlet flange.

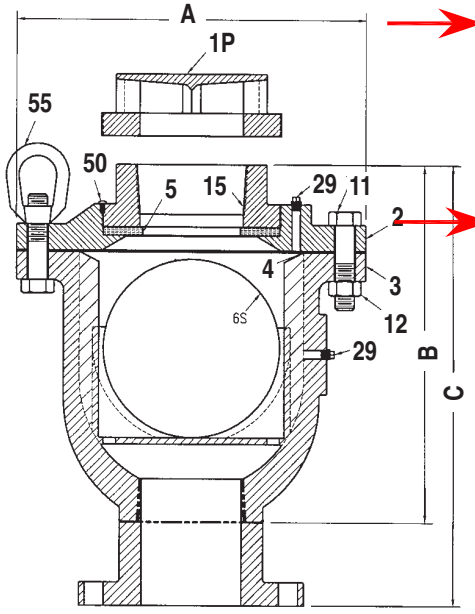

Standard operating pressure for Crispin Air Valves is 20 to 150 PSIG. Please check one of the following if your operating needs differ:

____ 2 to 40 PSIG
____ 151 to 300 PSIG

Size Specifications

MODEL	INLET SIZE	OUTLET SIZE	A	B	C	WEIGHT
*AL10	1” NPT	1” NPT	6.25	6.25		16
AL20	2” NPT	2” NPT	8.75	9.75		44
**AL21	2” 125# FLG	2” NPT	8.75		13.25	50
**AL22	2” 250# FLG	2” NPT	8.75		13.50	52
AL30	3” NPT	3” NPT	11.50	11.75		92
AL31	3” 125# FLG	3” NPT	11.50		15.75	112
AL32	3” 250# FLG	3” NPT	11.50		16.00	120
AL40	4” NPT	4” NPT	14.00	14.50		154
AL41	4” 125# FLG	4” NPT	14.00		17.50	170
AL42	4” 250# FLG	4” NPT	14.00		18.00	181

* Protectop not available ** Includes ANSI CL. 125 or 250 companion FLG & NPL
*** Parts are interchangable and optional at customer’s request

Air & Vacuum Parts List

ITEM	DESCRIPTION	MATERIAL	ASTM
***1S	TOP	CAST IRON	A126 CL. B
**1P	PROTECTOP	CAST IRON	A126 CL. B
2	FLANGE	CAST IRON	A126 CL. B
3F	BODY	CAST IRON	A126 CL. B
4	GASKET	ARMSTRONG N—8092	N/A
5	SEAT	BUNA—N RUBBER	D2000
6S	FLOAT	STAINLESS STEEL	A240
11	BOLT	STEEL	A307
12	NUT	STEEL	A563
29	PLUG	BRASS	B505
50	INTERFERENCE PIN	STAINLESS STEEL	A582
55	EYE BOLT	STEEL	A563

Crispin Valve, 600 Fowler Ave., Berwick, PA 18603 • 1-800-AIR-VALV • T: (570) 752-4524 • F: (570) 752-4962 • WWW.CRISPINVALVE.COM • sales@crispinvalve.com

Flow Line 70/71

Wafer & Lug Style
Sizes 2" - 12"

Flow Line™
Valve and Controls

Cartridge Seated Butterfly Valves

KEY FEATURES

Body

- One piece ribbed wafer and lugged body is Polyester coated as standard for a superior appearance and excellent resistance to external corrosion.
- Heavy duty ISO 5211 Top plate is slotted for ease of actuation and engineered to accept direct mounting of operators.
- Standard extended neck provides full clearance for 2” of insulation.

Disc

- Streamlined design offers higher Cv and lower pressure drop.

Shaft

- Triple shaft seals support the primary seal on machined radius of the disc. Our triple shaft seals ensure a dry stem design.
- Two secondary shaft seals are located inside the seat shaft holes and an environmental shaft seal eliminates contaminants from entering the shaft bore.
- Two self lubricated bronze bearings offer consistent torque valves and eliminate side loading.

Seat and Flange Seals

- Field replaceable, phenolic bonded cartridge seat provides no movement of the elastomer which is a common failure point of many resilient flexible seat designs.
- Torque fluctuation is eliminated by our phenolic bonded elastomer seats.
- Our dual purpose primary flange seal is widened offering additional compression of the elastomer against various flanges resulting in a positive seal.
- This resulting primary flange seal provides a smooth flow conduit for media and prevents build up in crevices created by traditional seat designs.
- Molded secondary flange seals assure no leakage when used with weld neck, slip on, and threaded flanges and eliminates the need for gaskets or O-rings.

Disc/Shaft Connection

- A high strength Double D drive ensures a positive shaft to disc connection.
- Disc floats inside the seat for positive sealing and extended seat life.
- No pins or bolts are exposed to flow.
- Offset shaft retainers mechanically retain the shaft in the body ensuring a blow out proof design.

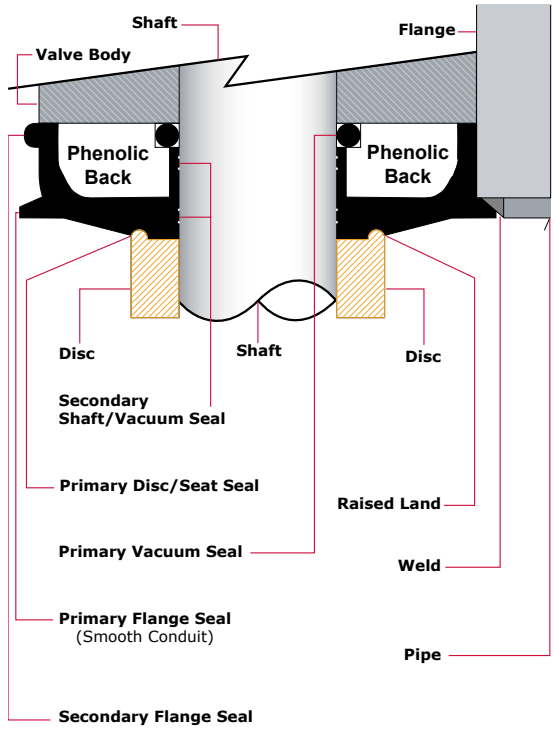

Shaft Sealing Method

- Disc shaft holes surrounded by a 360˚ machined radius are in constant contact with the flatted area of the seat.
- This design is far superior to resilient flexible seat designs that depend on the “squeeze” effect of the disc and seat interference which allows leakage behind the seat and up the shaft.
- The Flow Line shaft seal is achieved through a continuous pressure exerted from the flatted area of the seat to the machined radius of the disc.
- This sealing mechanism is further enhanced by forces exerted on the seat and shaft providing a secondary seal resulting in media free disc, shaft and seat connection.

Applicable Standards

ANSI B16.1	Conforms to ANSI Class 125 flange drilling.
ANSI B16.5	Conforms to ANSI 150 flange drilling.
ANSI B16.42	Conforms to ANSI Class 150 flange drilling, body wall thickness and pressure-temperature ratings.
ANSI B16.104	Exceeds Class VI shutoff requirements.
API 609	Butterfly Valve Category A.
AWWA C504	Diameter of stainless steel shaft exceeds AWWA Class 75B standard. Body wall thickness exceeds the AWWA Class 150B standard for butterfly valves.
MSS SP-25	Markings and identification conform to the requirements.
MSS SP-67	Butterfly Valves
ISO 5211	Actuator Mounting
USCG	Category “A” Title 46, CFR, Part 56

ENGINEERING

DIMENSIONS

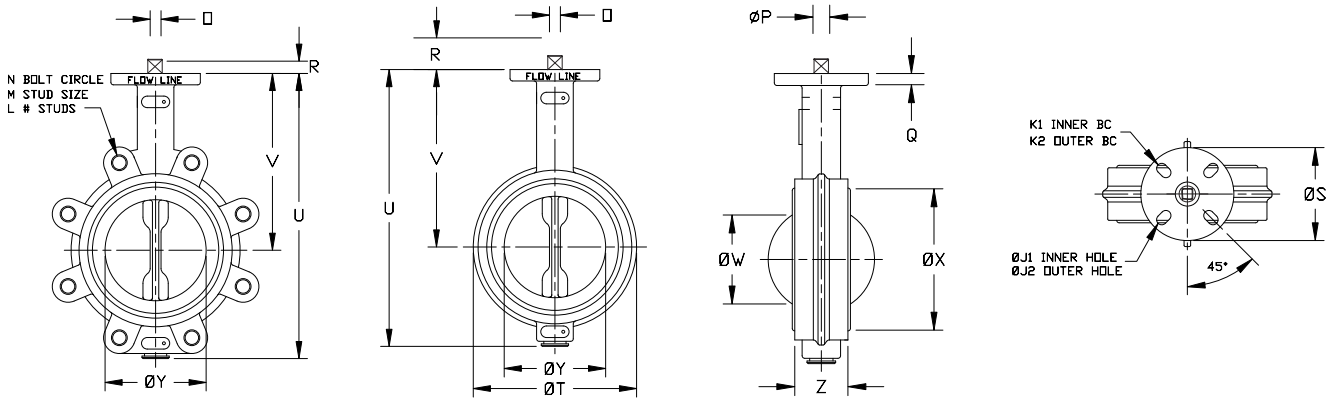

Valve Size	Z	Y	X	W	V	U	T	S	R	Q	P	O	Lug Drilling			Top Plate Drilling					Weight
													N	M	L	K1	K2	#holes	J1	J2	(lb)
2	1.74	2.25	2.65	1.46	5.62	8.44	4.12	4.00	0.827	.44	.551	0.551	4.75	5/8-11	4	2.76	3.25	4	.39	.41	8
2-1/2	1.86	2.81	3.15	2.14	6.12	9.19	4.88	4.00	0.827	.44	.551	0.551	5.50	5/8-11	4	2.76	3.25	4	.39	.41	10
3	1.86	3.31	3.78	2.74	6.38	9.69	5.38	4.00	0.827	.44	.551	0.551	6.00	5/8-11	4	2.76	3.25	4	.39	.41	11
4	2.11	4.19	4.78	3.60	7.12	11.00	6.88	4.00	0.827	.44	.551	0.551	7.50	5/8-11	8	2.76	3.25	4	.39	.41	17
5	2.24	5.06	5.84	4.58	7.75	12.12	7.75	4.00	1.063	.44	.670	.670	8.50	3/4-10	8	2.76	3.25	4	.39	.41	23
6	2.24	6.06	7.03	5.62	8.25	13.25	8.75	4.00	1.063	.44	.670	.670	9.50	3/4-10	8	2.76	3.25	4	.39	.41	29
8	2.54	7.94	8.96	7.43	9.44	15.56	11.00	6.00	1.063	.56	.866	0.866	11.75	3/4-10	8	4.02	5.00	4	.53	.53	44
10	2.74	10.00	11.09	9.38	11.25	18.69	13.38	6.00	1.063	.56	.866	0.866	14.25	7/8-9	12	4.02	5.00	4	.53	.53	66
12	3.24	11.94	13.09	11.35	12.19	21.69	16.12	6.00	1.063	.56	.866	0.866	17.00	7/8-9	12	4.02	5.00	4	.53	.53	99

CLASS II TORQUES (Inch-Pounds)

Shutoff Pressure	2"	2 1/2"	3"	4"	5"	6"	8"	10"	12"
50 PSI SHUTOFF	66	96	150	225	350	450	750	1325	2250
75 PSI SHUTOFF	98	141	237	261	504	651	1050	1778	2990
100 PSI SHUTOFF	103	148	249	343	531	685	1105	1872	3147
125 PSI SHUTOFF	107	155	260	376	553	714	1151	1950	3279
150 PSI SHUTOFF	110	158	265	384	564	728	1275	1989	3345
175 PSI SHUTOFF	121	175	283	417	632	814	1337	2320	3923
200 PSI SHUTOFF	132	192	300	450	700	900	1500	2650	4500
250 PSI SHUTOFF	145	211	318	486	770	990	1695	2995	5085
285 PSI SHUTOFF	160	232	337	528	847	1089	1915	3384	5746

Cv VALUES

Valve Size	10°	20°	30°	40°	50°	60°	70°	80°	90°
2	2	3.5	8	21	40	87	108	141	170
2-1/2	3	5	11	27	52	121	172	253	332
3	8	16	23	50	92	147	224	420	473
4	17	33	57	110	182	297	462	773	913
5	47	94	143	231	380	578	908	1485	1650
6	91	182	248	396	627	902	1386	2063	2178
8	116	231	330	528	858	1452	2508	4158	4257
10	223	446	633	935	1320	2090	3630	6710	7095
12	303	605	825	1320	2063	3135	5528	10230	10780

Class II

- Valve to be operated a minimum of once a month.
- Temperature well within resilient seat limits.
- Line media is a self lubricating. (Aqueous liquids)
- Minor chemical attacks on seat.
- Disc corrosion and media deposits to be mild.

Notes:
1. This chart to be used as a guide only.
2. These torque ratings do not apply to every possible service criteria, which may affect seating and unseating torque.
3. Torque values are applicable to Flow Line Series 70/71.
4. Do not apply a safety factor to the above torque values when sizing actuators.
5. Dynamic Torque should always be a consideration when sizing valves with high differential pressures.
6. For 3 way tee assemblies multiply the above torques by 1.5.

SPECIFICATIONS

HOW TO ORDER

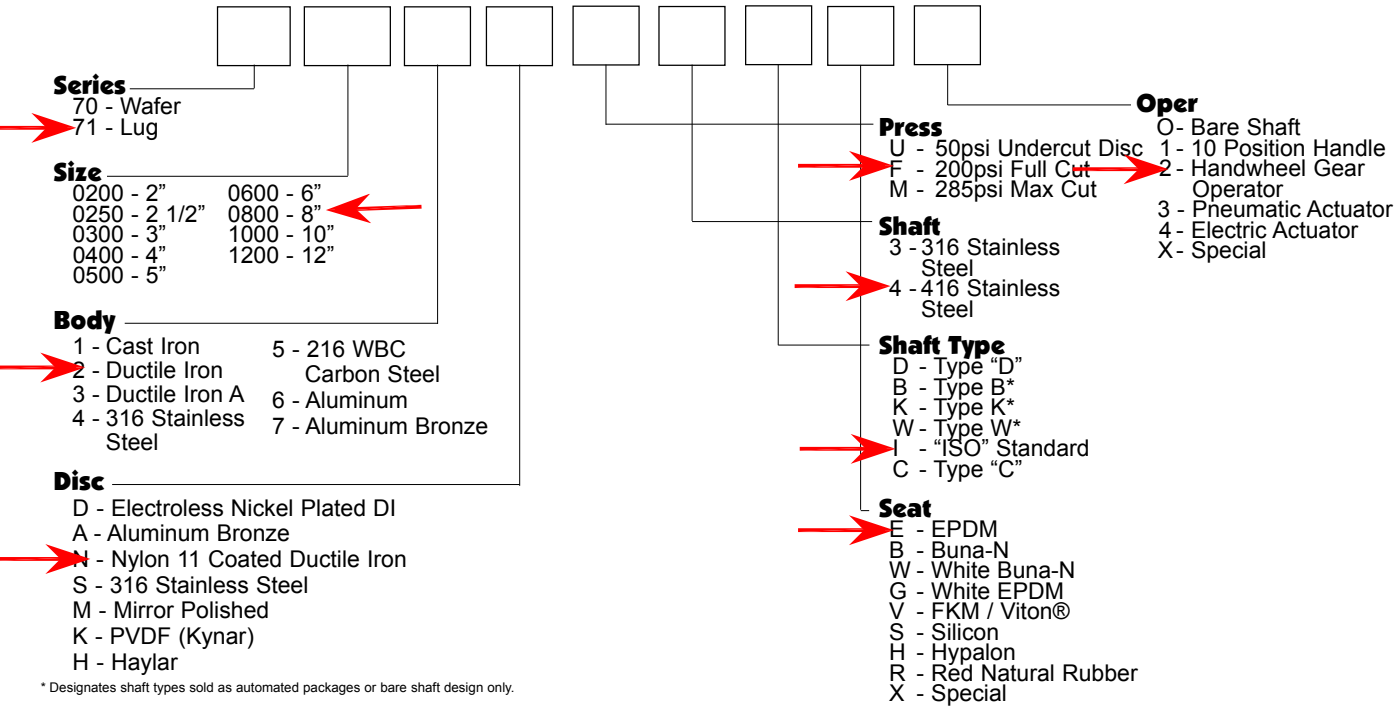

* Designates shaft types sold as automated packages or bare shaft design only.

Recommended Specifications

- Polyester coated ribbed wafer or lug bodies to provide extended necks for insulation and be able to install between ANSI 125/150 flanges. Lug design in sizes 2” - 12” to be fully rated for dead end service without any modification.
- Streamlined disc design with no pins or screws in the flow path and designed for high Cv and lower pressure drop.
- Upper and lower shaft design to utilize triple shaft seals as standard.
- Blow out proof design utilizing a Double D drive for a positive disc/shaft connection.
- Pressure responsive 360° sealing design will use constant pressure between machined radius on disc and flatted area of the seat.
- Valve to be Flow Line Series 70 wafer or Flow Line Series 71 lug design.

Components

Qty	Description	Qty	Description
1	Body	2	Shaft Retainers
1	Disc	1	Bearing Retainer
1	Upper Shaft	1	Environmental Shaft Seal
1	Lower Shaft	2	Secondary Shaft Seals
1	Seat	1	Thrust Bearing
		1	Inboard Bearing

Materials of Construction 2” - 12”

Body

- Cast Steel ASTM A-216 WCB
- 316 Stainless Steel ASTM A-351 CF8M
- Cast Iron ASTM A-126 Class B
- Ductile Iron ASTM A-536 (65-45-12)
- Ductile Iron ASTM A-395 (60-40-18)

Disc

- Electroless Nickel Plated Ductile Iron ASTM A-536 (65-45-12)
- Aluminum Bronze ASTM B-148 (954)
- Nylon 11 Coated Ductile Iron ASTM A-536 Grade (65-45-12)
- 316 Stainless Steel ASTM A-351 (CF8M)

Stem

- 316 Stainless Steel ASTM A-276 Type 316
- 416 Stainless Steel ASTM A-582 Type 416

Seat

EPDM - FDA Food Grade	-30 to + 275
Buna-N - FDA Food Grade	0 to +180
White Buna-N - FDA Food Grade	0 to + 180
Viton® - FDA Food Grade	0 to + 375
Silicon - FDA Food Grade	-80 to + 450
Hypalon	0 to + 180
Red Natural Rubber	0 to + 150

Viton® is a registered trademark of the E.I. DuPont De Nemours Company. FKM is the ASTM D1418 designation for Flourinated Hydrocarbon elastomers such as Viton® (DuPont) and Flourel® (3M).

FEATURES

- **Slotted ISO 5211 top plate and shaft for flexibility of direct mounting options**
- **Environmental shaft seal to keep contaminants from entering shaft bore**
- **Offset shaft retainers mechanically retain the shaft ensuring a blow out proof design**
- **One piece ribbed Polyester coated body with extended neck**
- **Streamlined disc with no pins or screws in flow path**
- **Primary seal provides a smooth flow conduit and prevents media buildup in crevices normally found with traditional designs**
- **Independent seals provide full vacuum rating**

- **High strength upper and lower shafts with triple shaft seals**
- **Two self lubricated bronze bearings to eliminate side loading**
- **Double D Drive for a positive disc/shaft connection with no pins or bolts exposed to flow**
- **Proven pressure responsive 360° sealing method uses constant pressure between machined radius on disc and flatted area of the seat that eliminates the "squeeze" of the interference seat design our competition relies on**
- **Phenolic bonded cartridge seat with primary and secondary seals provide no movement of the elastomer**
- **Two secondary shaft seals located inside the seat shaft holes**

The **Series 70 wafer** style and **Series 71 lug** style are heavy duty cartridge seated butterfly valves compatible ANSI 125/150 weld neck, slip on, and threaded flange standards. 2" - 12" valves are fully rated to 200 psi, bi-directional, dead end service. Valves with undercut discs to 50 psi are also available through the size range. Valves with Max cut Disc to 285 psi are also available through size range. All Series 70/71 valves, regardless of the rated working pressure, are vacuum rated to 29.92" of Mercury Gauge (0 Micron).

COATINGS

Flow Line Series 70 and 71 butterfly valve bodies are Polyester coated as standard. Polyester is a significant upgrade to paint or two part epoxy coatings. Our standard Polyester coating offers outstanding protection against abrasion and corrosion. The Flow Line Polyester coating is not affected by outdoor exposure and maintains excellent resistance to UV rays.

TEST	RESULT
Salty Fog Test	No change in excess of 2000 hours
Outdoor Weathering (UV Rays)	No noticeable change in excess of 12 months
50% Sulfuric Acid Test	No change for 48 hours

INSTALLATION, MAINTENANCE AND ASSEMBLY

Handle Kit

The Flow Line Handle Kit is designed for manual on/off and throttling service for quarter turn, resilient seated butterfly valves ranging from 2" - 12". The Polyester coated ductile iron handle kit includes the handle assembly with a locking lever and bolt on plate notched at 10 degree increments. The notched plate also includes on/off stops to prevent over travel of the handle and can be used with a padlock as standard. Other available options include an Infinite Throttling Handle Kit, Memory Stop and a 2" Square Nut.

Handwheel Gear Operator

The Flow Line Handwheel Gear Operator is designed for manual on/off and throttling service for quarter turn butterfly valves ranging from 2" - 12". The handwheel gear operator is constructed with a heavy duty, Polyester coated ductile iron housing, is completely self lubricated and weatherproof. Along with the gear operator, it also includes a valve position indicator, ductile iron handwheel and mechanical travel stops for field adjustment. Other available options include a Chainwheel Kit, Padlock Kit and a 2" Square Nut.

Actuation

Series 21 spring return actuators are available throughout the size range.

Series 50 solenoid valves are available in 1/8", 1/4", and 1/2"NPT.

Series 52 and 53 limit switches provide local and remote valve position.

Series 55 and 56 positioners are available with either a 3-15 psi or 4-20 MADC signal.

Installation

To install, simply close the valve, position between the flanges and assemble the valve to the flanges with studs or cap screws. Do not use flange gaskets. Flow Line Series 70 and 71 butterfly valves can be installed with the disc closed. Before hand tightening the flange bolts, fully open the disc to ensure disc O.D. clearance with pipe I.D. Hand tighten the flange bolts and close the valve to check for valve disc and pipe clearance. If contact is made, reposition as necessary and tighten all flange bolts to proper torque specification.

Maintenance and Repair

No regular maintenance or lubrication is required. Factory assembly procedures provide adequate lubrication for the life of the valve. To replace any component, remove valve from the line by fully closing valve disc. Spread flanges, remove all bolts then remove valve from line.

Testing

All Flow Line Series 70 and 71 butterfly valves are bi-directionally tested to 130 percent of rated working pressure. Test certification is available upon request at time of order.

Flanges

ANSI 125/150 cast iron, steel, raised face, flat faced weld neck, slip on and threaded flanges are suitable for use with Flow Line butterfly valves. Please contact the factory for proposed installation with plastic flanges.

Warranty

All products manufactured by Flow Line Valve and Controls are warranted against defects in material and workmanship for a period of 2 years from date of installation.

All statements, technical information and recommendations in the bulletin are for general use only. Flow Line Valve and Controls is not responsible for suitability or compatibility of these products in relation to system requirements. Consult Flow Line Valve and Controls distributors or factory for the specific requirements and material selection for your intended application. Flow Line Valve and Controls reserves the right to change or modify product design or product without prior notice. Flow Line Valve and Controls is not responsible for editorial or pictorial errors within this literature.

Flow Line Valve and Controls

110 Main Project Rd. Schriever, LA 70395
Phone (985) 414-6004 Fax (985) 414-6072
Toll 800-815-9226
www.flowlinevalves.com

Doc. No. FLBV1
© Flow Line

Series 71
Technical Drawing 71-001
Date: June 2009/Page 1 of 1

VALVE SIZE	Z	Y	X	W	V	U	S	R	Q	P	N	LUG DRILLING M	L	K1	TOP PLATE DRILLING K2	#holes	J1	J2	WGT. (LB)
2	1.74	2.25	2.65	1.46	5.62	8.44	4.00	.827	.44	.551	4.75	5/8-11	4	2.76	3.25	4	.39	41	8
2-1/2	1.86	2.81	3.15	2.14	6.12	9.19	4.00	.827	.44	.551	5.50	5/8-11	4	2.76	3.25	4	.39	.41	10
3	1.86	3.31	3.78	2.74	6.38	9.69	4.00	.827	.44	.551	6.00	5/8-11	4	2.76	3.25	4	.39	.41	11
4	2.11	4.19	4.78	3.60	7.12	11.00	4.00	.827	.44	.551	7.50	5/8-11	8	2.76	3.25	4	.39	.41	17
5	2.24	5.06	5.84	4.58	7.75	12.12	4.00	1.063	.44	.670	8.50	3/4-10	8	2.76	3.25	4	.39	.41	23
6	2.24	6.06	7.03	5.62	8.25	13.25	4.00	1.063	.44	.670	9.50	3/4-10	8	2.76	3.25	4	.39	.41	29
8	2.54	7.94	8.96	7.43	9.44	15.56	6.00	1.063	.56	.866	11.75	3/4-10	8	4.02	5.00	4	.53	.53	44
10	2.74	10.00	11.09	9.38	11.25	18.69	6.00	1.063	.56	.866	14.25	7/8-9	12	4.02	5.00	4	.53	.53	66
12	3.24	11.94	13.09	11.35	12.19	21.69	6.00	1.063	.56	.866	17.00	7/8-9	12	4.02	5.00	4	.53	.53	99

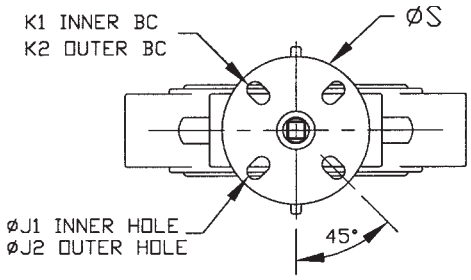

ITEM	DESCRIPTION	MATERIAL	REMARKS
4	STEM		
3	DISC		
2	SEAT		
1	BODY		

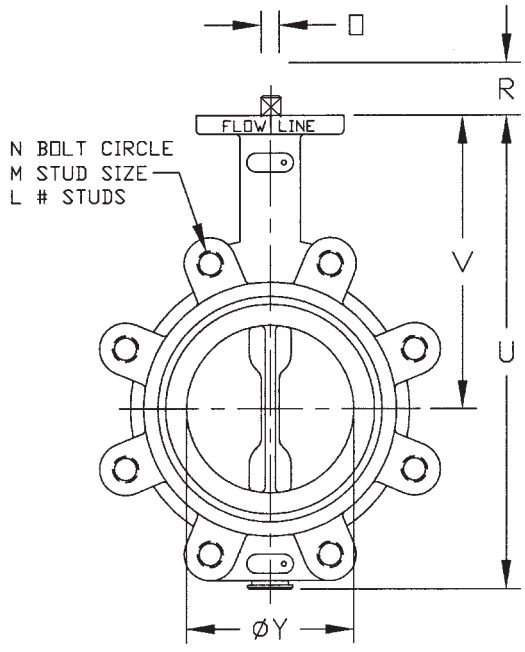

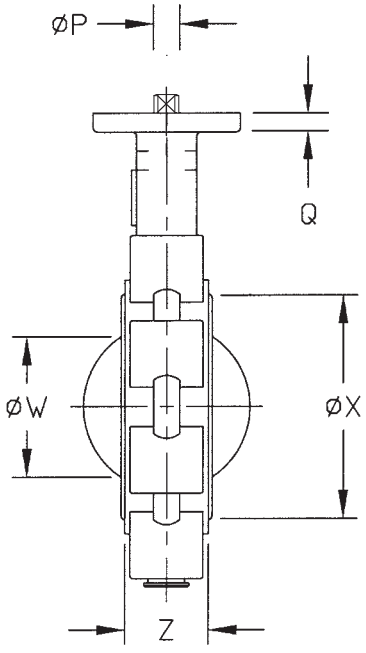

VALVE SIZE	FLANGE DRILLING	**DIMENSIONAL DATA SHEET**	PART NO.
PRESSURE RATING		**BUTTERFLY VALVE**	DRAWING NO. 71-001 / REV B
CUSTOMER/PROJECT		**SERIES 71**	DATE 6/09
INQ./PO NO.		**SIZES 2”-12”**	
ORDER NO.			
CERTIFIED BY	DATE		

Flow Line Valve and Controls, Inc.
PO Box 677, 110 Main Project Rd • Schriever, LA 70395 • Phone (985) 414-6004 • Fax (985) 414-6072
www.flowlinevalves.com

DIMENSIONS
Series 17 Chain Wheel

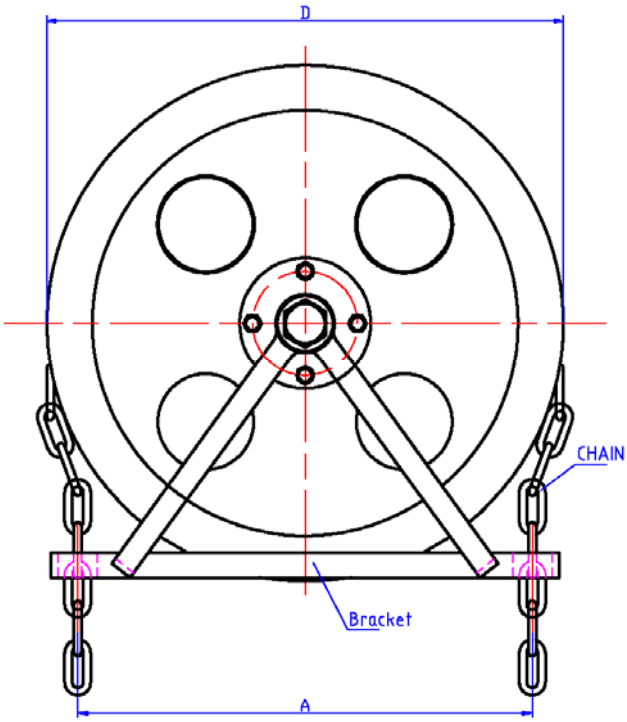

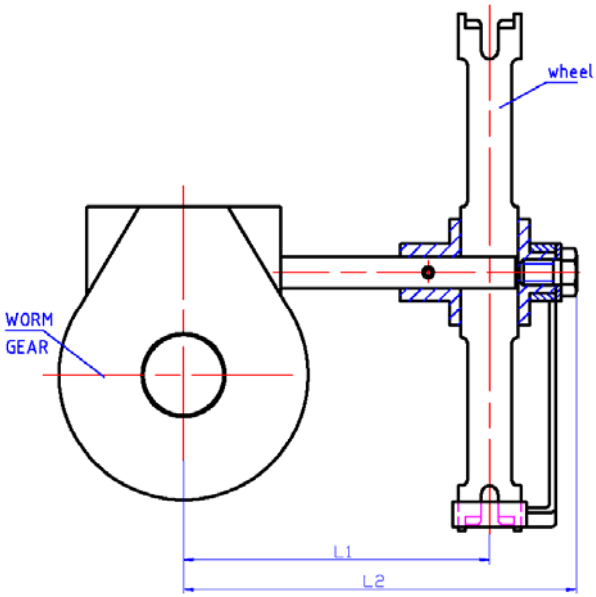

PART #	USE WITH GEAR OPERATOR PART #	D	L1	L2	A	SHAFT BORE*
17-32200	15-00202 15-00225 15-00203	7.87"	3.62"	5.62"	7.08"	0.629"
	15-00204 15-00205 15-00206	200 mm	92 mm	143 mm	180 mm	16 mm
17-32290	15-00208 15-00210	11.41"	6.41"	8.46"	10.62"	0.748"
	15-00212 15-00214	290 mm	163 mm	215 mm	270 mm	19 mm
17-32410	15-00216 15-00218	16.14"	10.10"	12.32"	14.96"	0.984"
	15-00220 15-00224	410 mm	257 mm	313 mm	380 mm	25 mm

* Standard shaft bore sizes, custom sizes available

Flow Line Controls, Inc.
P.O. Box 677 · Schriever, LA 70395 · Phone: 985-414-6003 · Toll Free 1-800-815-9226 ·Fax 985-414-6072
www.flowlinecontrols.com

 © 2009 Flow Line

Dimensions

Series 15 Gear Operator
Size: 15-00204, 15-00206,
and 15-00210

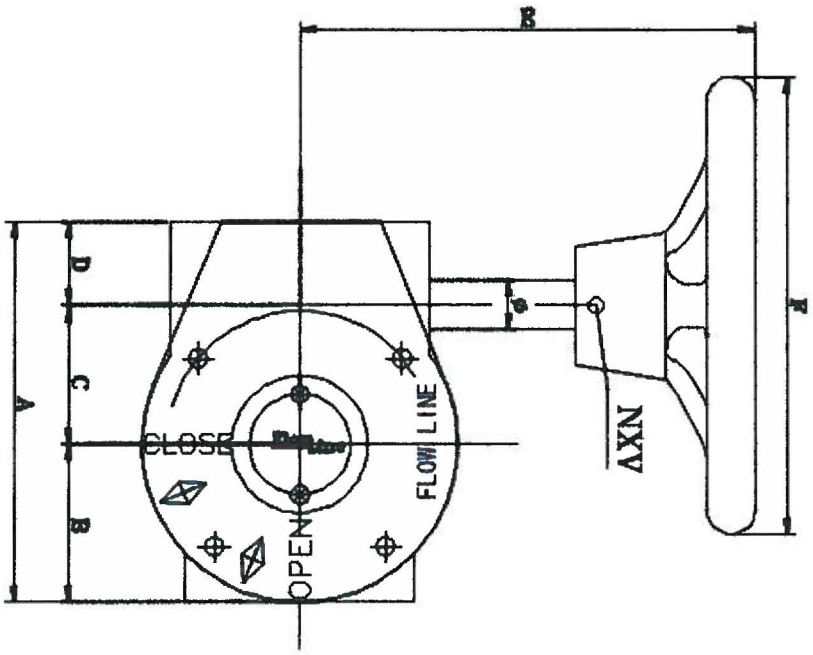

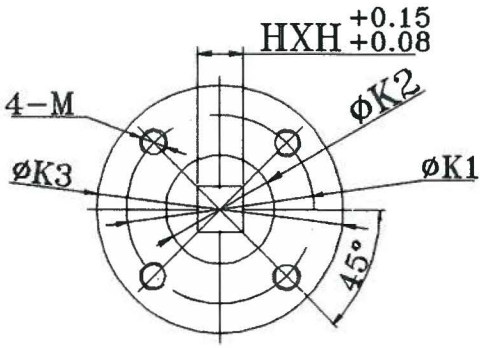

IS05211

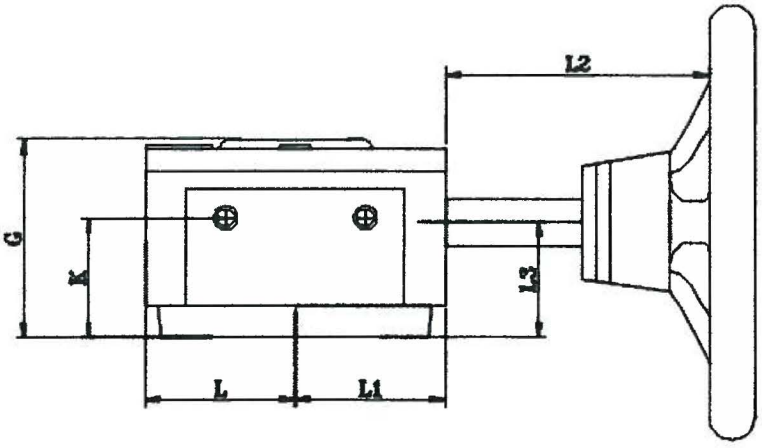

DIMENSIONS ARE INCHES UNLESS NOTED

SIZE	PART #	RATIO	A	B	C	D	E	F	G	H*H	K	L	L1	L2	L3	ISO5211	K1	K2	K3	M	ø	NXV	Torque Output
2"-4"	15-00204	24:1	4.88	2.00	1.77	1.10	6.14	7.48	2.56	14*14	1.57	2.05	2.05	4.05	1.57	F07	2.76	1.77	3.54	M8	0.63	5x36mm	1328
5"-6"	15-00206	24:1	4.88	2.00	1.77	1.10	6.14	7.48	2.56	17*17	1.57	2.05	2.05	4.05	1.57	F07	2.76	1.77	3.54	M8	0.63	5x36mm	1328
8"-10"	15-00210	30:1	6.73	2.87	2.6	1.14	9.25	11.37	3.15	22*22	1.73	2.87	2.87	6.41	1.73	F10	4.01	1.89	4.92	M10	0.75	6x45mm	4425

Drawn By: DAP
Revision: A
Date: 3-1-2016

DAP

Flow Line Valve and Controls, LLC
P.O. Box 677; 110 Main Project Road, Schriever, LA 70395
Phone: (985) 414-6004 Fax: (985) 414-414-6072
www.flowlinevalves.com

	BALL VALVES MATERIAL SPECIFICATION	SPEC NO:
CalgonCarbon	FORGED BRONZE, BRASS, OR BARSTOCK BRASS BODY REGULAR PORT BALL VALVE	4.03

SAP PART NUMBER:

CCC DRAWING NUMBER:

MATERIAL: Bronze or forged brass or barstock brass body regular port ball valve, blow-out proof stem, ball and seat retainer design to permit valve to be dead ended in either flow direction, chrome plated bronze or brass ball and stem, PTFE seats and seals (furnish glass fiber reinforced PTFE seats and graphited stem seal if required to meet pressure and temperature rating), wrench handle operated, threaded ends.

RATING: 500 PSIG @ 100 DEG. F.
150 PSIG @ 366 DEG. F.

MANUFACTURER: DuraValve / Siral or Equal.

SIZES: 1/4" thru 2"

MODELS: VRN5000 or Equal

GENERAL REQUIREMENTS:

PROPRIETARY AND CONFIDENTIAL
THIS DOCUMENT AND DESIGN DETAILS ARE THE PROPERTY OF CALGON CARBON CORPORATION AND ARE NOT TO BE REPRODUCED IN WHOLE OR PART, NOR EMPLOYED FOR ANY PURPOSE OTHER THAN SPECIFICALLY PERMITTED IN WRITING BY CALGON CARBON CORPORATION. THIS DOCUMENT IS LOANED AND SUBJECT TO RETURN ON DEMAND.

Issue Date: 01/01/89 Revision Date: 08/14/2003

Approved by Gerald Kirner on 02/09/2006

CALGON CARBON
SPECIFICATION 4.03

Ultra Pure™
A HAMMOND VALVE PRODUCT

UP8901* 1/4"-3"

Brass Ball Valve For Potable Water
Two-Piece • Full-Port
600 PSIG WOG
Threaded Ends

Dimensions and workmanship conform to MSS SP-110
ASME A112.4.14
***Also Available UP8901-07**
Designed in accordance with the requirements of California AB 1953, Vermont S 152 and Senate Bill S3874

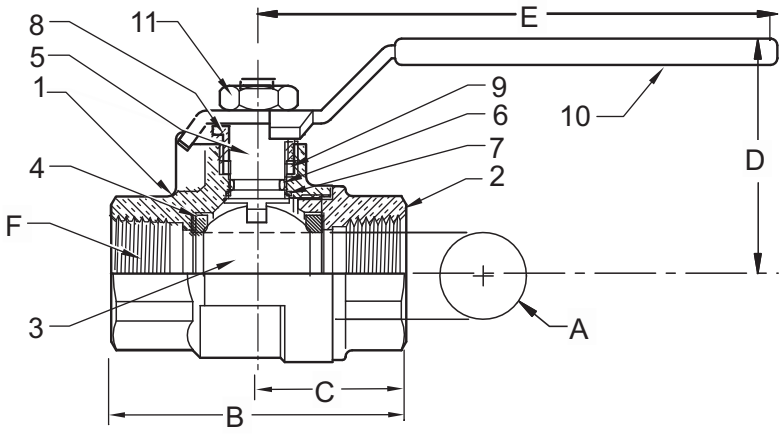

TESTED AND CERTIFIED UNDER INDUSTRY STANDARDS — WaterQuality

C SP US — ANSI Z 21.15a, ASME B16.44 — CGA 9.1a

C UL US — UL 125, UL 842 — **

MATERIAL LIST

ITEM	PART	MATERIALS	ASTM SPEC.
1	Body	Brass, Forged	B283 C27450
2	Tailpiece	Brass, Forged	B283 C27450
3	Ball	Brass w/Chrome	C27450
4	Ball Seal	PTFE	Commercial
5	Stem	Brass	C27450
6	O-Ring	Buna-N	D2006
7	Thrust Washer	PTFE	Commercial
8	Gland Nut	Brass	B16
9	Packing	PTFE	Commercial
10	Handle	Zinc Plated Steel	Commercial
11	Handle Nut	Zinc Plated Steel	Commercial

DIMENSIONS

Valve Size	UNITS	1/4"	3/8"	1/2"	3/4"	1"	1-1/4"	1-1/2"	2"	2-1/2"	3"
A	INCHES	0.39	0.39	0.51	0.76	1.00	1.26	1.50	2.00	2.48	2.95
	mm	9.9	9.9	12.7	19.3	25	32.0	38.1	51.0	63	74.9
B	INCHES	1.87	1.87	2.25	2.62	3.06	3.5	3.75	4.38	5.16	6
	mm	47	47	57	67	78	89	95	111	131.1	152.4
C	INCHES	0.95	0.95	1.12	1.31	1.91	2.21	1.87	2.19	2.58	3
	mm	24	24	61	33	49	56	47	56	65.5	76.2
D	INCHES	1.42	1.42	1.46	1.93	2.1	2.33	2.52	2.96	3.94	4.37
	mm	36	36	37	49	53	59	64	75	100.1	111
E	INCHES	3.14	3.14	3.14	4.35	4.35	5.00	5.00	6.90	7.87	7.87
	mm	80	80	80	110	110	127	127	175	199.9	199.9
F	THREAD SIZE	1/4" NPT	3/8" NPT	1/2" NPT	3/4" NPT	1" NPT	1-1/4" NPT	1-1/2" NPT	2" NPT	2-1/2" NPT	3" NPT
Cv		12	12	18	40	72	112	161	287	307	323
TORQUE	in-lb	16	16	19	58	69	89	124	210	445	563
	N.m	1.8	1.8	2.1	6.5	7.8	10	14	24	50	64
WEIGHT	lbs	0.33	0.34	0.47	0.89	1.24	1.66	2.34	4.94	7.4	10.47
	Kg	0.149	0.155	0.213	0.403	0.565	0.755	1.064	2.245	3.35	4.75

Hammond Valve
16550 W. Stratton Drive
New Berlin, WI 53151
Phone: 262-432-2702
Fax: 262-432-2703

Rev 11

*Same design as Milwaukee UPBA-475B.

Note: Lead free refers to the wetted surface of the pipe, fittings and fixtures in potable water systems that have a weighted average lead content ≤0.25%. Source: California Health and Safety Code (116875).

The information presented on this sheet is correct at the time of publication. Hammond Valve reserves the right to change design, and/or material specifications without notice. For the Installation, Operation and Maintenance Manual (IOM) see the engineering section on our website. For the most current information access www.hammondvalve.com
Hammond Valve is a registered trade mark of Milwaukee Valve Company.

HAMMONDVALVE

INSTALLATION -BALL VALVE ,THREADED END

1) Thoroughly clean and prepare the piping system before valve installation.
2) Remove the valve end caps if present, and inspect the valve ports and seating surfaces for cleanliness just prior to installation.
3) Support the valve to prevent unnecessary stresses induced by connecting pipe.
4) Be sure the rating of the valve is compatible with the intended service conditions.
5) Operate the valve from the full open to closed position.
6) PTFE thread sealant is recommended when making up connections. Consult the sealant manufacturer's instructions for proper use. Install on pipe and not on the valve.
7) Care should be used to not over tighten the valve onto the pipe, as it is possible to distort the internal parts of the valve.
8) Because bronze is a softer metal than steel, always put the pipe in a vise and turn the valve onto the pipe end. Always use a smooth-jawed wrench on the valve end on the same side of the valve to which the pipe or fitting is being installed to prevent distortion of the internal parts of the valve or transmission of torque and stress into the body joint. Pipe Wrenches should be used on a pipe and fittings only.
9) Take precaution also to prevent loosening body to tailpiece connection by reverse rotation during installment/alignment. Such loosening could comprise body to tailpiece sealing.
10) Verify the tightness of the packing nut after installation.

OPERATION

1) Ball valves are designed to be opened by rotating the lever handle in a counterclockwise direction, and closing in a clockwise direction. The handle indicates the ball port direction.
2) Under certain conditions, throttling flow in the near-closed position can destroy the valve seats. Consult factory for throttling service.

INSPECTION & MAINTENANCE

1) Periodic inspection and preventative maintenance is not required other than adjustment of stem packing, and cycling of the valve from open to closed position.
2) If a valve develops a packing leak, adjust the packing nut to increase the pressure on the stem packing. The packing nut should be turned in a clockwise direction approximately ¼ turn, or until the leakage stops. **Do not repack valves under pressure.**
3) Repair or replacement of two piece ball valves internal parts is not recommended. Damage can occur to the body and tailpiece during disassembly that would make the valve inoperable.

REPAIR PARTS Not available for ULTRA-PURE valves.

CalgonCarbon	BALL VALVES MATERIAL SPECIFICATION	SPEC NO:
	STAINLESS STEEL AND ENTRY FULL BORE BALL VALVE	4.08

SAP PART NUMBER:

CCC DRAWING NUMBER:

MATERIAL: Stainless steel and entry full bore ball valve 1/2" thru 4" size (Reduced Port for 6" & 8" Acceptable) with blow-out proof stem and seat retainer design to permit valve to be dead ended in either flow direction. Valve has lockable feature to lock the valve in either the open or shut position. Type 316 stainless steel body, ball and stem, TFE seats and seals, wrench operated, 150 lb. ANSI B16.5 flanged ends, raised face, 1/2" thru 4" size Face-to-face dimensions to conform to ANSI B16.10 for steel gate valves. Screwed body inserts not acceptable. Gear Operator for 6" and 8" size valves. No asbestos allowed.

RATING: 275 PSIG @ 100 DEG. F. or 110 PSIG @ 353 DEG. F.

MANUFACTURER: Modentic VL-11, Sharpe Valve #50116-R, or equal

SIZES: 1/2" thru 8"

MODELS: Modentic Figure No. VL-11-150 , Figure No. BV-150, or equal.

Issue Date: 01/01/89 Revision Date: 09/15/99

Approved by Joseph P. McMahon on 07/17/2001

CCC SPEC. 4.08

SHARPE® VALVES

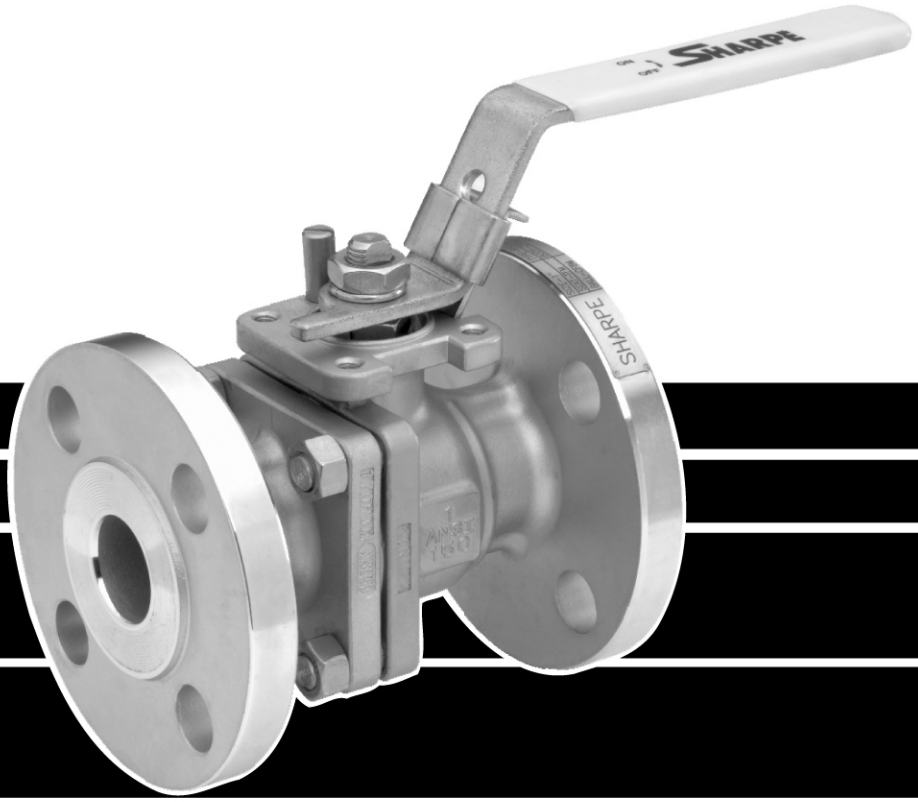

FLANGED FULL PORT BALL VALVE SERIES 50 / CLASS 150

SERIES 50
VALVE PARTS AND IDENTIFICATION

CLASS 150
BLOW OUT PROOF STEM
LOCKING DEVICE

APPLICABLE STANDARDS	
Wall Thickness	ASME B 16.34
Face to Face Dimensions	ASME B 16.10
Flange Dimensions	ASME B 16.5
Pressure Tests	ASME B 16.34 API 598 (Optional)
Basic Design	ASME B16.34

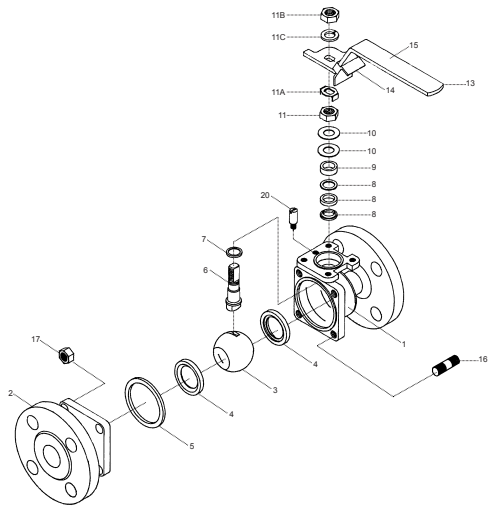

1/2" - 2"

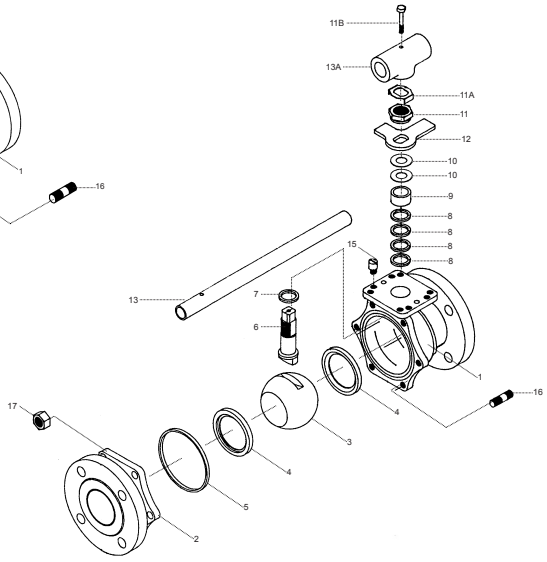

2-1/2" - 4"

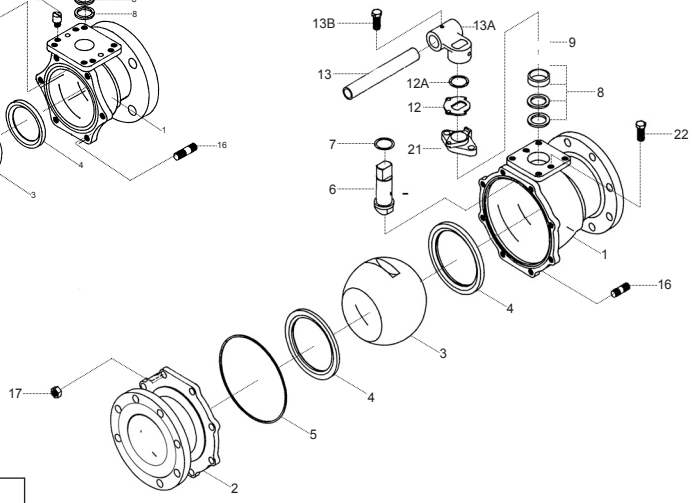

6" - 8"

PART NO.	PART	QTY.	MATERIAL
1	Body	1	316 Stainless Steel ASTM A351 CF8M Alloy 20 ASTM A351 CN7M Carbon Steel ASTM A216 WCB Hastelloy C ASTM A494 GR CW-12MW Monel ASTM A494 GR M35-1
2	End Connector	1	316 Stainless Steel ASTM A351 CF8M Alloy 20 ASTM A351 CN7M Carbon Steel ASTM A216 WCB Hastelloy C ASTM A494 GR CW-12MW Monel ASTM A494 GR M35-1
3	Ball	1	316 Stainless Steel Alloy 20 Hastelloy C
4	Seat	2	TFM(Super TFE) TFE Reinforced TFE NOVA PEEK
5	Body Seal	1	TFE
6	Stem	1	316 Stainless Steel Alloy 20 Hastelloy C 17-4PH (Option)
7	Thrust Bearing	2	Reinforced TFE
8	Stem Packing	3/4	Reinforced TFE
9	Gland Packing	1	304 Stainless Steel
10	Belleville Washer (1/2"-4")	2/4	304 Stainless Steel
11	Packing Nut (1/2"-4")	1	304 Stainless Steel
11A	Lock Tab	1	Stainless Steel
11B	Handle Nut	1	304 Stainless Steel
11C	Lock Washer	1	304 Stainless Steel (1/2"-2")

*See Dimensions

PART NO.	PART	QTY.	MATERIAL
12	Stopper	1	304 Stainless Steel
12A	Snap Ring	1	Stainless Steel (6"-8")
13	Handle	1	304 Stainless Steel (1/2"-2") Galvanized Steel (2-1/2"-4") Ductile Iron (6"-8")
13A	Wrench Block	1	Stainless Steel
13B	Hex Head Bolt	1	304 Stainless Steel
14	Locking Device (1/2"-2")	1	304 Stainless Steel
15	Sleeve	1	Vinyl
16	Body Stud	SEE* N	A193 B8 (SST) A193 B7 (CS)
17	Nut	SEE* N	A194 8 (SST) A194 2H (CS)
20	Stop Pin (1/2"-2") (2-1/2"-4")	1 2	304 Stainless Steel 304 Stainless Steel
21	Gland Flange (6"-8")	1	304 Stainless Steel
22	Gland Bolts (6"-8")	2	304 Stainless Steel

SERIES 50
DIMENSIONS

1/2” - 2”

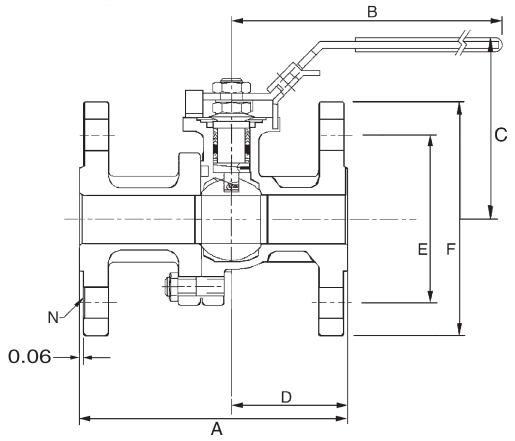

2-1/2” - 4”

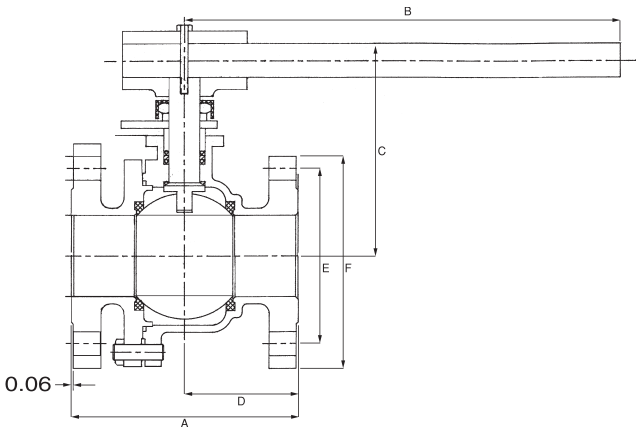

6” - 8”

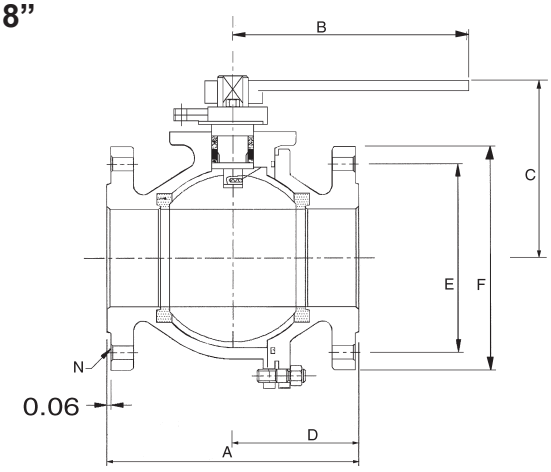

CV DATA	
1/2”	26
3/4”	50
1”	94
1-1/2”	260
2”	480
2-1/2”	750
3”	1300
4”	2300
6”	5400
8”	10000

PORT	
1/2”	0.59
3/4”	0.78
1”	1.00
1-1/2”	1.50
2”	2.00
2-1/2”	2.55
3”	3.00
4”	4.00
6”	6.00
8”	7.88

WEIGHT (lbs.)	
1/2”	4
3/4”	6
1”	8
1-1/2”	15
2”	20
2-1/2”	36
3”	45
4”	75
6”	135
8”	290

SIZE	A	B	C	D	E	F	N	G	H	I	J	K	W
1/2”	4.25	4.75	3.60	1.80	2.38	3.50	4	1.39	3/8-24 UNF	.22	.28	.63	M5
3/4”	4.62	4.75	3.75	2.00	2.75	3.85	4	1.39	3/8-24 UNF	.22	.28	.63	M5
1”	5.00	6.22	3.75	2.12	3.13	4.25	4	1.39	7/16-20 UNF	.30	.30	.90	M6
1-1/2”	6.50	9.00	4.50	2.76	3.56	5.00	4	1.94	9/16-18 UNF	.35	.42	1.18	M8
2”	7.00	9.00	4.80	3.08	4.75	6.00	4	1.94	9/16-18 UNF	.35	.42	1.18	M8
2-1/2”	7.50	13.75	6.70	3.09	5.50	7.00	4	2.84	M20	.55	.55	1.83	M10
3”	8.00	13.75	7.00	3.74	6.00	7.48	4	2.84	1-14 UNS	.745	.66	1.83	M10
4”	9.00	13.75	7.70	4.46	7.50	9.01	8	2.84	1-14 UNS	.745	.66	1.83	M10
6”	15.50	38.97	11.22	7.61	9.50	10.98	8	3.89	1.02	1.64	1.46	3.00	M12
8”	18.00	38.97	11.57	8.34	11.75	13.50	8	4.59	1.02	1.64	1.46	3.00	M12

The dimensions above are for information only, not for construction. For complete actuator mounting dimensions refer to Engineering Bulletin EB-2003.

1/2" - 4"

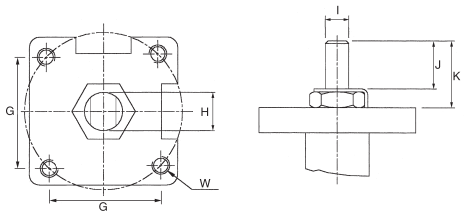

6" - 8"

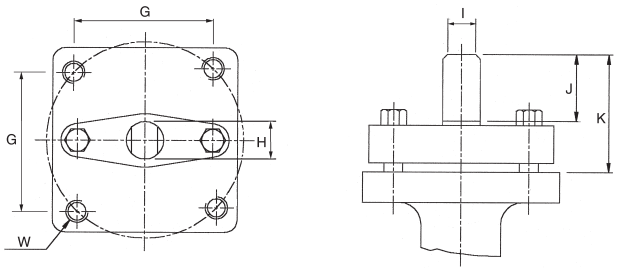

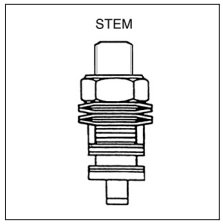

1/2" - 4"
STEM ARRANGEMENT
FOR ACTUATORS

SEAT PRESSURE/TEMPERATURE RATING SERIES 50

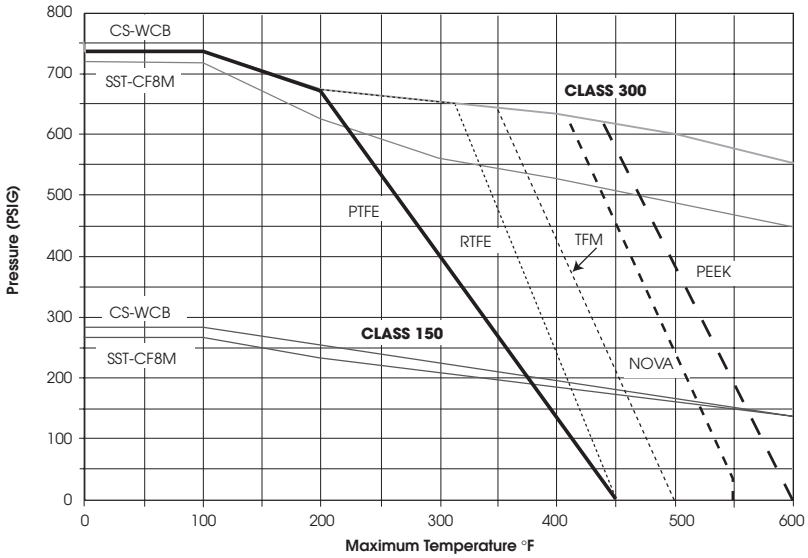

HOW TO ORDER

VALVE SIZE	VALVE SERIES	CLASS	ALLOY	SEATS	OPTIONS
1/2" 3/4" 1" 1-1/2" 2" 2-1/2" 3" 4" 6" 8"	50	150# = 11	2 = Alloy 20 4 = Carbon Steel 6 = Stainless Steel 5 = Hastelloy C 3 = Monel	T = TFE R = RTFE N = NOVA P = Peek M = TFM™	X = Oxygen Service OH = Oval Handle F = Fugitive Emissions Certified ANSI 593.00.01 E = Extended Stem L = Lockable Extended Stem D = Leak detection Stem GO = Gear Operator 7 = 17- 4PH Stem A = Nace

3/4" 50 11 6 T X

SHARPE® VALVES
A Division of Smith-Cooper International, LLC

Toll-Free 1-877-7SHARPE
(877) 774-2773
Fax: (708) 562-9250
E-Mail: info@sharpevalves.com
www.sharpevalves.com
1260 Garnet Drive
Northlake, Illinois 60164 U.S.A.

Due to continuous development of our product range we reserve the right to change the dimensions and information contained in the leaflet as required.
TFM is a registered trademark of Dyneon, LLC.

CalgonCarbon	BALL VALVES MATERIAL SPECIFICATION	SPEC NO:
	STAINLESS STEEL END ENTRY REGULAR PORT BALL VALVE	4.57

SAP PART NUMBER:

CCC DRAWING NUMBER:

MATERIAL: Stainless steel end entry regular port ball valve with blowout proof stem and seat retainer design to permit valve to be dead ended in either flow direction. ASTM A-296, Grade CF8M Type 316 stainless steel body, ball and stem, TFE seats and seals, wrench operated, threaded ends. Screwed body inserts or tail pieces not acceptable.

RATING: 80 PSIG @ 400 DEG. F. or 1500 PSIG @ 150 DEG. F.

MANUFACTURER: Modentic, Sharpe Valve #54576, Jamesbury, or equal.

SIZES: 1/4" thru 2"

MODELS: Modentic Figure No. V-008, Jamesbury Bulletin 210, Trueline - N600LL, or equal

Issue Date: 01/01/89 Revision Date: 09/15/99

Approved by Joseph P. McMahon on 07/17/2001

Series 50M76

2-Piece Ball Valve

SHARPE®

Valves, Automation & Controls

Features

- Full port
- 1000 WOG
- 316 Stainless Steel
- Locking device
- Blow-out proof stem
- Oval handle available

Dimensions

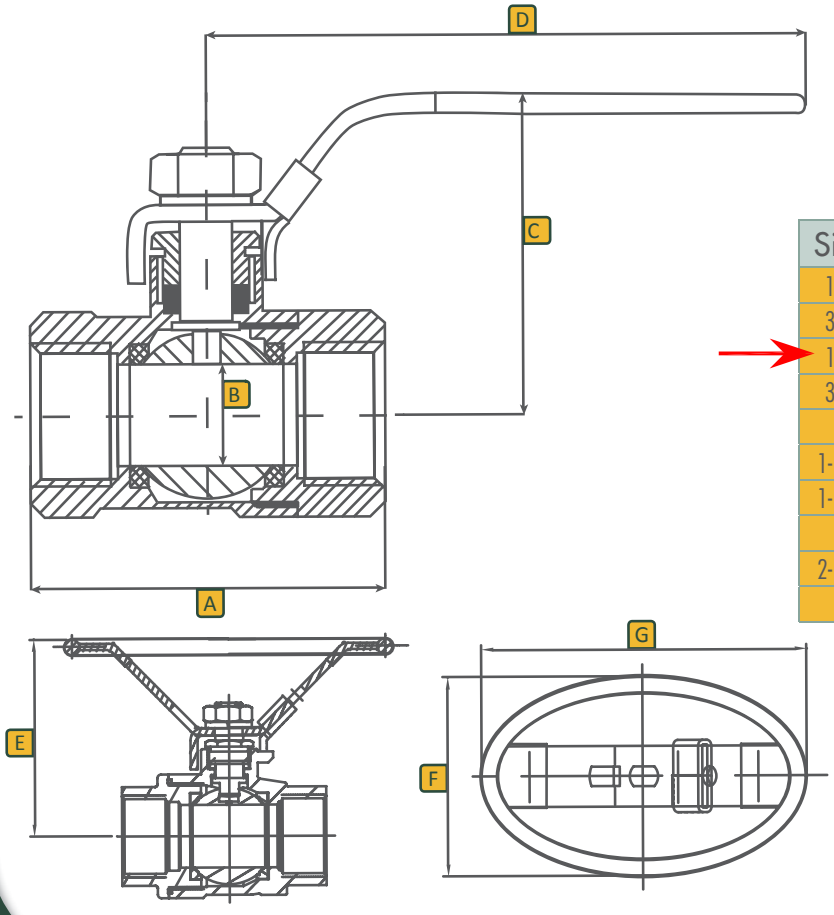

Dimensions (Inches)

Size	A	B	C	D	E	F	G
1/4	2.00	0.43	1.81	4.00	1.06	2.16	3.39
3/8	2.00	0.43	1.81	4.00	1.06	2.16	3.39
1/2	2.36	0.50	1.89	4.00	1.06	2.16	3.39
3/4	2.75	0.80	2.04	5.00	1.34	2.76	4.33
1	3.25	1.00	2.44	5.75	1.53	3.18	5.26
1-1/4	3.80	1.25	2.56	5.75	1.53	3.18	5.26
1-1/2	4.33	1.50	2.96	7.50	1.97	4.13	6.30
2	5.27	2.00	3.25	7.50	1.97	4.13	6.30
2-1/2	6.58	2.50	5.00	9.73	-	-	-
3	7.55	3.00	5.40	9.73	-	-	-

SHARPE - SERIES 50M76 | 2-Piece Ball Valve

Toll Free (877) 774-2773 | Local (708) 562-9221 | Fax (708) 562-0890 | www.sharpevalves.com

Parts & Materials

No.	Part Name	Qty	Material
1	Body	1	316 Stainless Steel
2	Ball	1	316 Stainless Steel
3	Cap	1	316 Stainless Steel
4	Seat	2	RTFE
5	Gasket	1	PTFE
6	Stem	1	316 Stainless Steel
7	Stem Packing	1 Set	PTFE
8	Handle	1	304 Stainless Steel
9	Nut	1	304 Stainless Steel
10	Thrust Washer	1	PTFE
11	Galand Nut	1	304 Stainless Steel
12	Spring Washer	1	304 Stainless Steel
13	Handle Cover	1	Plastic
14	Locking Pad	1	304 Stainless Steel

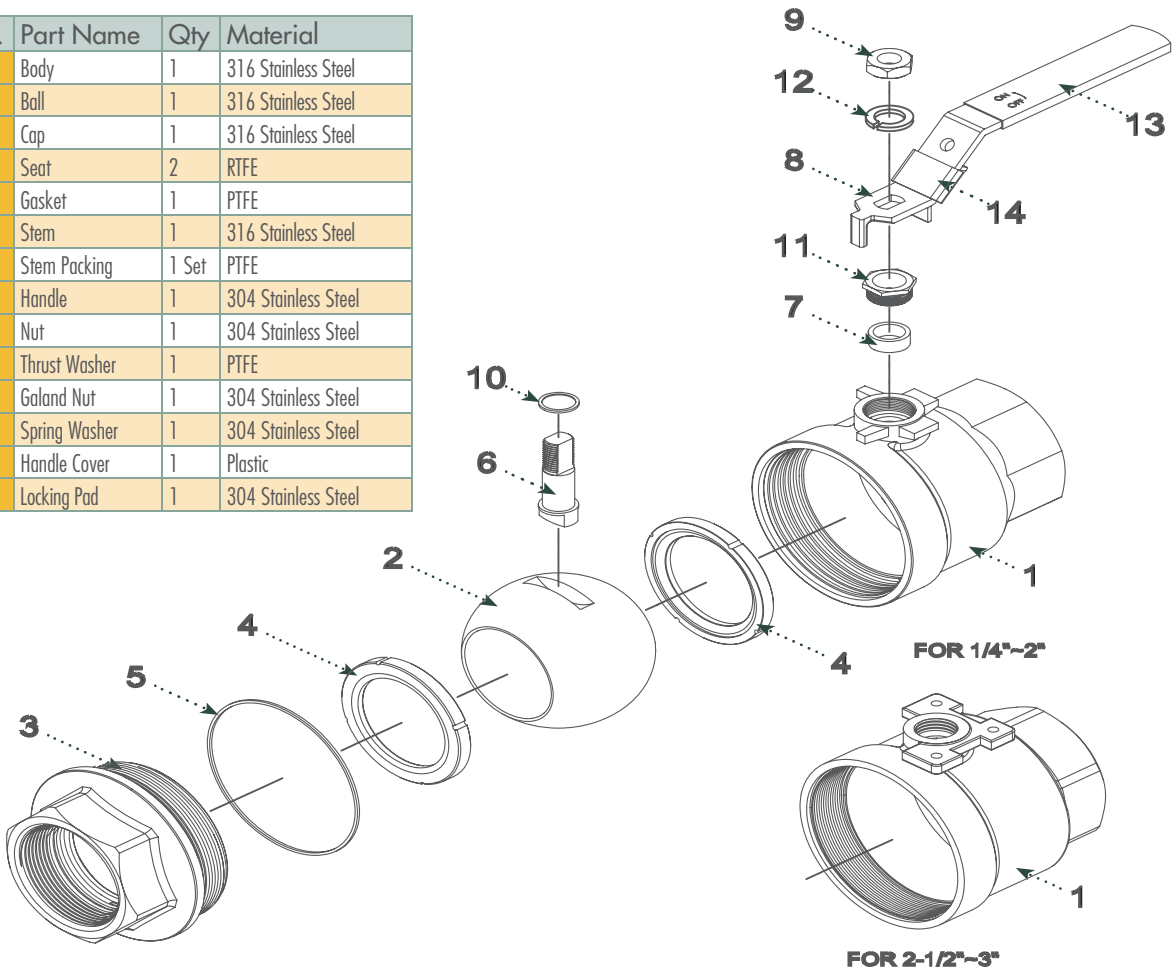

Technical Information

Size	Cv	Weight-Lbs
1/4	6	0.5
3/8	6	0.5
1/2	24	0.7
3/4	35	1.1
1	47	2.0
1-1/4	81	3.0
1-1/2	105	4.8
2	241	8.0
2-1/2	319	14.0
3	580	20.0

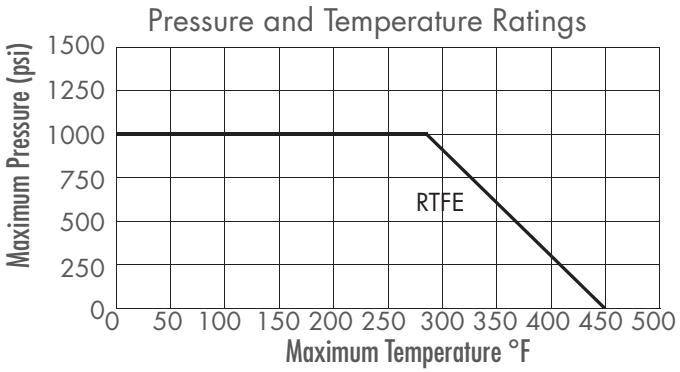

Ordering

Fig: 1/2 - 50M76
Description: 1/2" - Series 50M76

Size		Series	Options	
1/4	1-1/4	50M76	OH	Oval Handle
3/8	1-1/2			
1/2	2			
3/4	2-1/2			
1	3			

Due to continuous development of our product range, we reserve the right to change the dimensions and information for this product as required.

CalgonCarbon	STRAINERS MATERIAL SPECIFICATION	SPEC NO:
	SAMPLE PORT SEPTUM, TYPE 316 STAINLESS STEEL	22.29

SAP PART NUMBER: 1058440

CCC DRAWING NUMBER: 90100025

MATERIAL: Sample port septum, Type 316 stainless steel, 0.060" wedge wire with 0.008" slot opening, Septum to be 1" O.D. x 1 1/2" long with 1/2" threaded half-coupling one end and 1/8" thk. cap other end, Overall Length= 2 9/16"

MANUFACTURER: Orthos or equal

Issue Date: Revision Date: 10/22/2010

Approved by Joseph P. McMahon on 10/22/2010

BILL OF MATERIAL

ITEM	QUANTITY	SAP#	DESCRIPTION	MATERIAL
A	1		1/2" HALF COUPLING, 3000#, THREADED	316L SS
B	1		WEDGE WIRE, 1" O.D. X 1 1/2"LG., 0.060" WIRE W/0.008" SLOT	316L SS
C	1		CAP, 1" O.D. X 1/8" THK.	316L SS

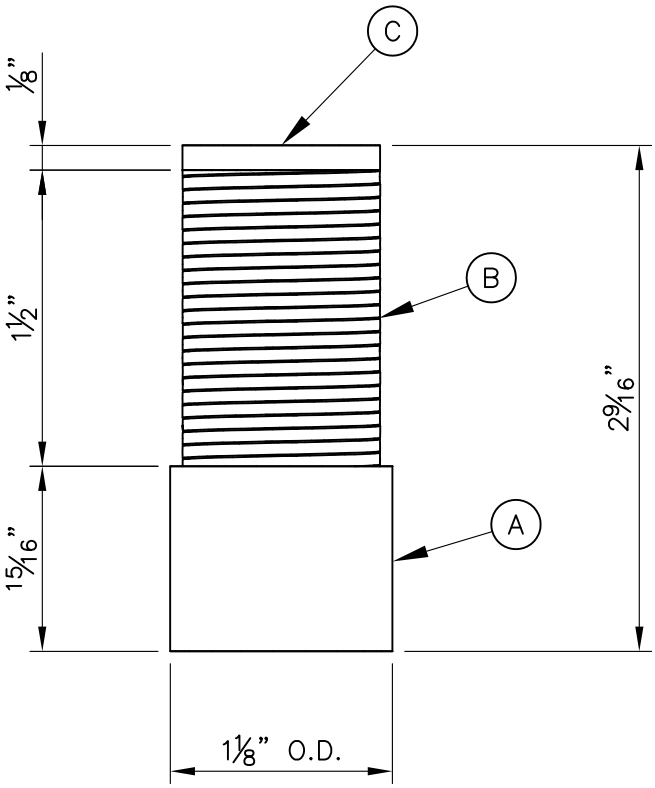

PLAN

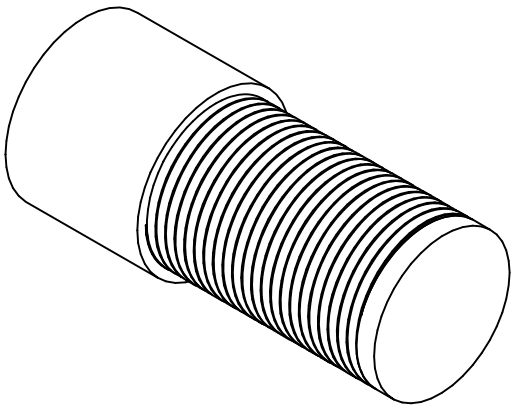

ISO

SAP NUMBER: 1058440

THIS DRAWING AND DESIGN IS THE PROPERTY OF CALGON CARBON CORPORATION AND IS NOT TO BE REPRODUCED IN WHOLE OR IN PART NOR EMPLOYED FOR ANY PURPOSE OTHER THAN SPECIFICALLY PERMITTED IN WRITING BY CALGON CARBON CORPORATION. THIS DRAWING LOANED SUBJECT TO RETURN ON DEMAND.

	NAME	DATE
DRAFTER	RES	10-21-2010
DESIGNER		
CHECKER		
APPROVAL		
PROJECT No.	STANDARD	

REV	DESCRIPTION	APP	DATE
2			
1			
0	ISSUED FOR FABRICATION	RES	10/21/10

REVISIONS

CalgonCarbon

CLIENT

TITLE
1/2" SAMPLE PORT
SEPTA DETAIL
CCC SPEC. 22.29

DWG. Size	SHEET No.	SCALE
A	1 OF 1	NONE

DWG. No. 90100025 REV. 0

V:\Products\Septa\90100025 Septa Spec 22.29.dwg Oct 07, 2014 - 11:12am

CalgonCarbon	STRAINERS MATERIAL SPECIFICATION	SPEC NO:
	BASKET STRAINER, TYPE 316 STAINLESS STEEL	22.53

SAP PART NUMBER:

CCC DRAWING NUMBER:

MATERIAL: Perforated basket strainer (Carbon Retainer) for 150 lb. Raised Face Flanges, type 316 stainless steel construction. Basket is to be Fabricated from 14 Gage 316 stainless steel with 1/8" holes drilled on 3/16" centers and covered with 40 mesh 316 stainless steel screen, this will then be covered by a 4 mesh 316 stainless steel support screen (0.063" wire diameter).

RATING: Support Screen is to be designed for 125 PSIG if plugged in forward or reverse flow.

MANUFACTURER: Mack Iron Works Company, or equal.

SIZES: 2" thru 12"

MODELS: Mack Iron Works Company Series PB-R/FF, Style PBL or equal.

Issue Date: 01/01/90 Revision Date: 08/23/90

Approved by Matthew R. McGowan on 06/16/99

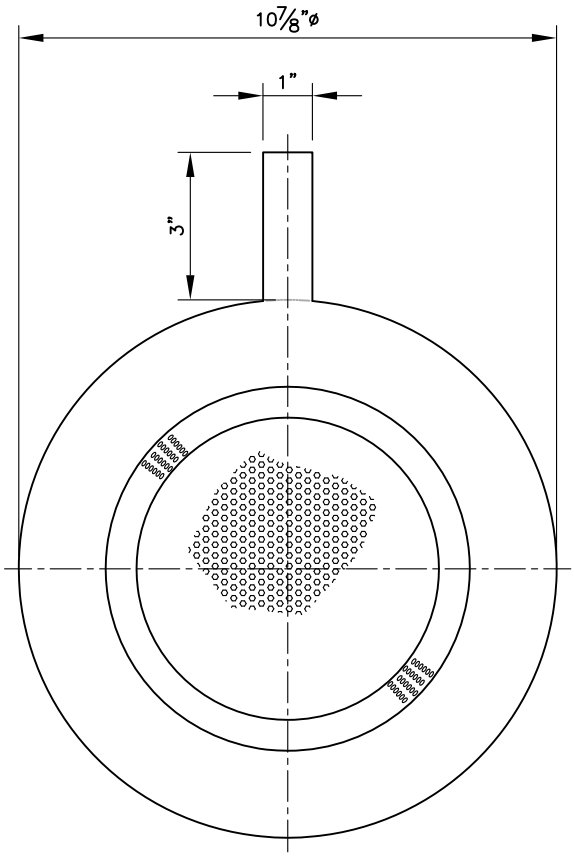

FRONT

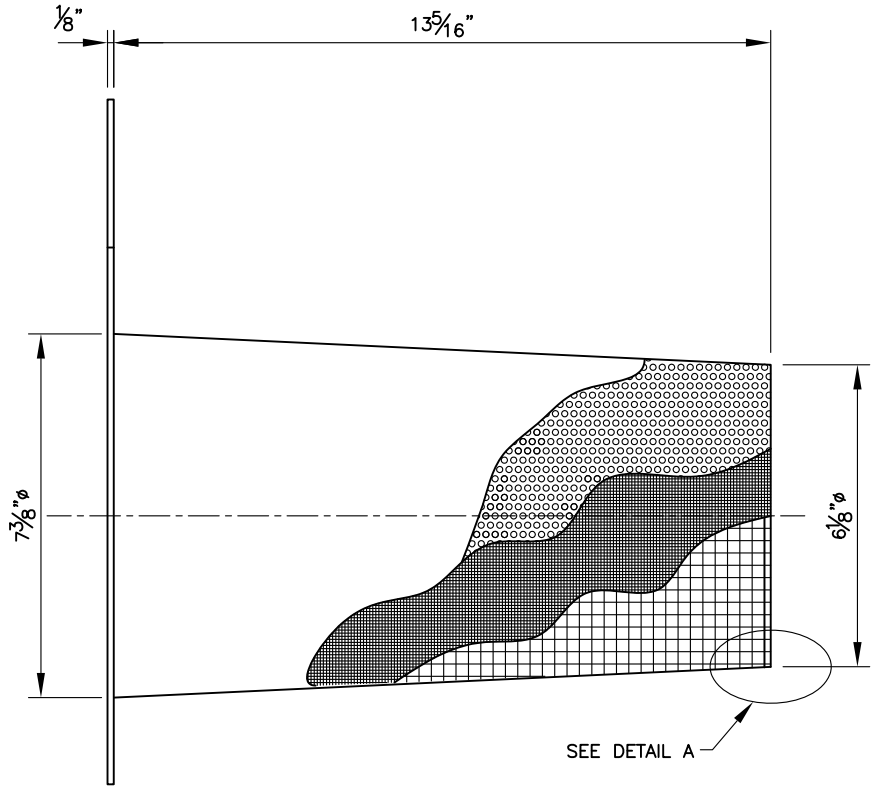

SIDE

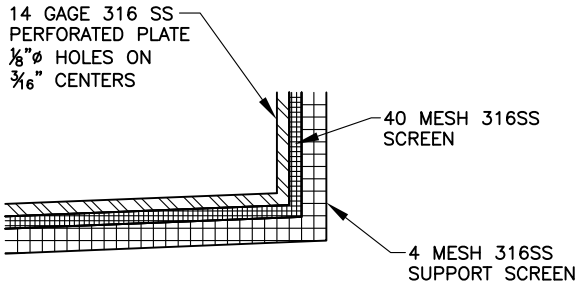

DETAIL A

THIS DRAWING AND DESIGN IS THE PROPERTY OF CALGON CARBON CORPORATION AND IS NOT TO BE REPRODUCED IN WHOLE OR IN PART NOR EMPLOYED FOR ANY PURPOSE OTHER THAN SPECIFICALLY PERMITTED IN WRITING BY CALGON CARBON CORPORATION. THIS DRAWING LOANED SUBJECT TO RETURN ON DEMAND.

	NAME	DATE
DRAFTER	BKM	8/29/06
DESIGNER		
CHECKER	RES	4/3/07
APPROVAL		
PROJECT No.	STANDARD	

REV	DESCRIPTION	APP	DATE
2			
1			
0	ISSUED FOR FABRICATION	RES	4/3/07

REVISIONS

CalgonCarbon

CLIENT: STANDARD

TITLE: 8" STRAINER, 316L SS
CCC SPEC 22.53
DETAILS

DWG. Size	SHEET No.	SCALE
A	1 OF 1	NONE

DWG. No. 90060220 REV. 0

V:\Products\Strainers\90060220 8inch Strainer.dwg Jul 24, 2013 – 9:21am

CalgonCarbon	STRAINERS MATERIAL SPECIFICATION	SPEC NO:
	FILTER NOZZLE, POLYPROPYLENE	22.106

SAP PART NUMBER:

CCC DRAWING NUMBER:

MATERIAL:

Filter Nozzle, 0.008"(0.2mm) Slot, 1" WW thread x 45 MM long with 3/4" six point nut, polypropylene construction. Expanding ring, 32 MM diameter 1" WW thread for 12-17 MM plate thickness, polypropylene construction. Pipe saddle, FDA approved Rubber to suit a schedule 80 PVC pipe, the pipe header size shall be specified by Calgon Carbon Corporation. All polypropylene parts used in this manufacture shall be virgin grade material and an ivory color.

MANUFACTURER: Orthos or equal.

MODELS: Orthos type C2, or equal.

Issue Date: 03/08/2005 Revision Date:

Approved by Gerald Kirner on 03/08/2005

Technical Information

Design

For general purposes the filter nozzles should be placed on 6" centers, with 8" centers being the maximum recommended (subject to the filter media, single or multi-layer, depth of bed, etc.). The filter nozzles are available in a wide variety of slot sizes to suit the media; and airtubes and tailpipes for air or water backwash can be provided as required.

Consistency of the Material

Filter nozzles made of polypropylene are resistant to many chemicals including the following examples:

@ 140°F / 60°C

- ammonia 10%
- formaldehyde 10%
- isopropanol all concentrations
- methanol 50%
- caustic soda solution 50%
- hydrochloric acid 10%
- sulfuric acid 10%
- soda water
- ozone (68°F / 20°C, 50 pphm)

In addition to virgin polypropylene (max. temperature 140°F), all filter nozzles are also available in glass fiber reinforced polypropylene (max. temperature 230°F) and Kynar (max. temperature 275°F). Other available materials include stainless steel, alloy 20 and hastelloy.

Installation Specifications

Recommended Torque	4.0 ft. lbs.
Max RPM	430

In lower temperatures polypropylene becomes more brittle. If nozzles are to be installed in cold weather, we recommend that all polypropylene materials are first warmed before installation.

When using with hot water (max. continuous temperature up to 230°F / 110°C, polypropylene with chemically combined 30% glass fiber is recommended.

PVDF is recommended for hot water with a continuous temperature of up to 275°F / 135°C. (Conditionally resistant to concentrated caustic solutions.)

Color Coded Polypropylene Nozzles

Slot Size	Color
0.2	ivory
0.3	green
0.35	white
0.5	grey
0.7	yellow
0.8	blue
1.0	black
1.5	orange
2.0	green

All specifications are subject to change without notice.

Conversion Chart

Multiply units in left column by proper factor below

LENGTH	in.	ft.	mm	cm	m
1 inch	1	0.0833	25.4	2.540	0.0254
1 foot	12	1	304.8	30.48	0.3048
1 millimeter	0.0394	0.0033	1	0.100	0.001
1 centimeter	0.3937	0.0328	10	1	0.01
1 meter	39.37	3.281	1000	100	1
AREA	**in.²**	**cm²**			
1 inch²	1	6.452			
1 centimeter²	0.1550	1			
VOLUME	**liter**	**U.S. gal.**			
1 liter	1	0.2642			
1 U.S. gallon	3.785	1			
VOLUME RATE	**gallon / min.**	**m³ / hr.**	**liter / hr.**		
1 gallon/minute	1	0.227	227		
1 m³/hour	4.403	1	1000		
1 liter/hour	0.063	0.001	1		
PRESSURE	**lbs. / in.²**	**ft. water at 39.2°F**	**bar**		
1 pound/in.²	1	2.307	0.069		
1 foot water	0.4335	1	0.0299		
1 Bar	14.50	33.45	1		

Filter Nozzles

Model C2

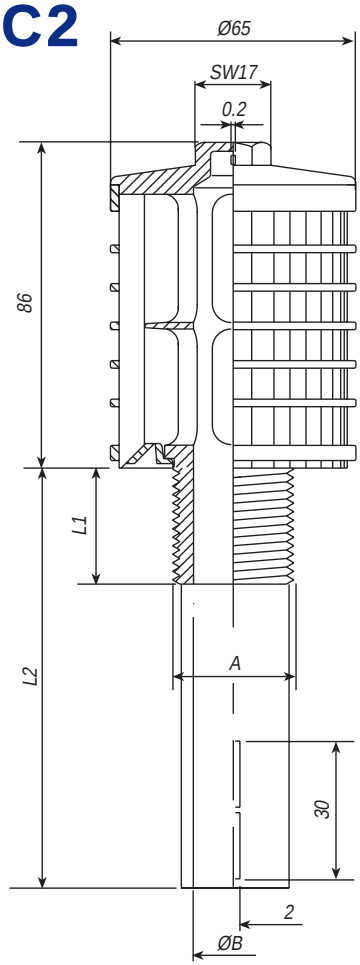

All dimensions in mm
unless otherwise noted.

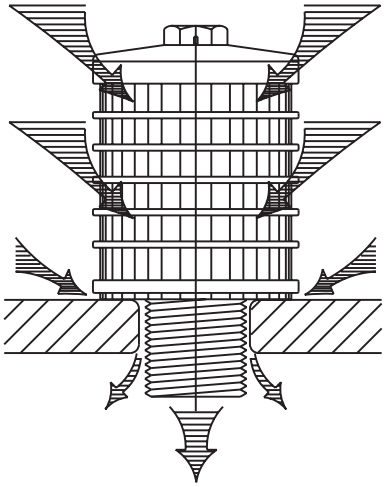

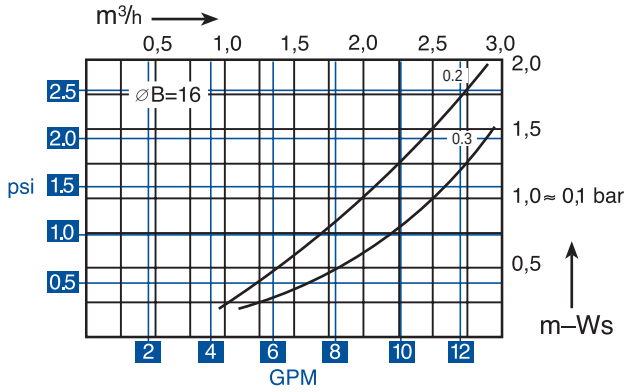

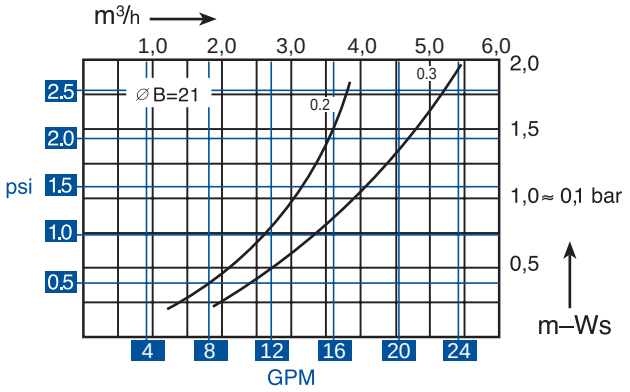

Model C2 Ordering Information

Slots	Thread	ØA	Thread Length — L1	Shaft — L2	ØB
36 x 0.2 = 3.70 cm²	3/4" NPT				16 = 2.00 cm²
36 x 0.3 = 5.50 cm²	1" NPT				21 = 3.40 cm²
	M24	24	20, 45, + 5 + 5...	L1, 80, 110, 140, 200, *up to* 400	16 = 2.00 cm²
	1" WW	25.4	45	L1, 80, 110, 140, 200, *up to* 400	16 = 2.00 cm²
	1-1/4" WW	32	20, 30, 45,	L1, 80, 110, 140, 200, *up to* 400	21 = 3.40 cm²
	G3/4"	26.5	20, 45, + 5 + 5...	L1, 80, 110, 140, 200, *up to* 400	16 = 2.00 cm²

Nuts / Washers / Expanding Rings

Model MU60

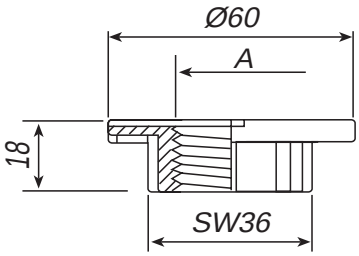

Model MU43

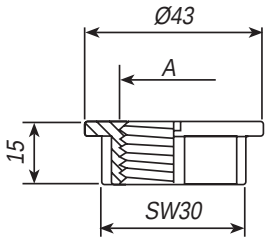

Model MUZ

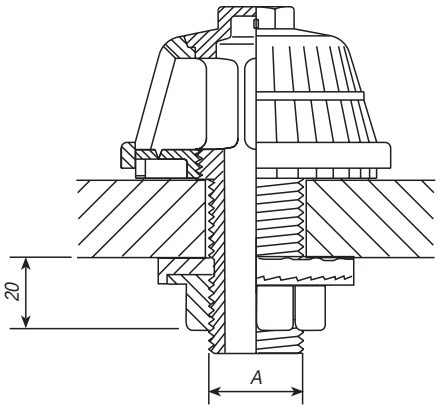

All dimensions in mm unless otherwise noted.

Ordering Information (Nuts)

Model #	Thread (A)
MU60	1-1/4" WW, 1" WW, M24
MU43	1" WW, M24, M20
MUZ	M24

Model DP

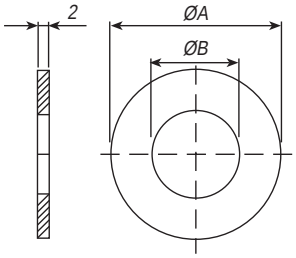

Model DG

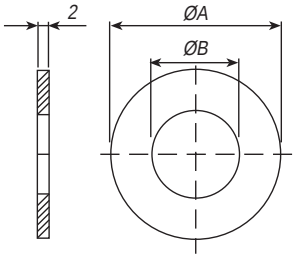

All dimensions in mm unless otherwise noted.

Ordering Information (Washers)

Model #	ØA	ØB	Material
DP	50	32	PP
	70	30	
		27	
		25	
		21	
DG	50	32	Rubber
	70	27	
		25	
		21	

Model DB65

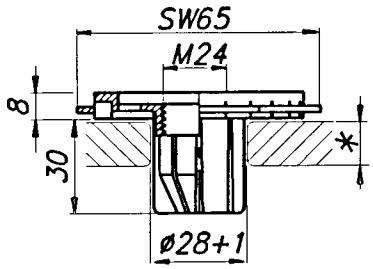

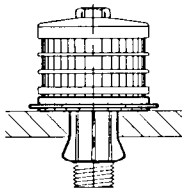

Model KSPB

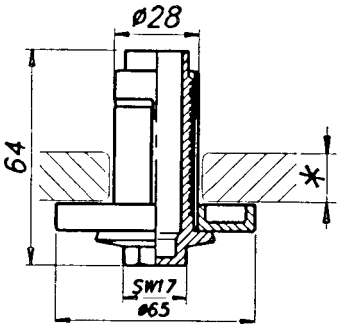

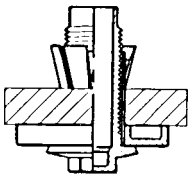

All dimensions in mm unless otherwise noted.

Ordering Information (Expanding Rings)

Model #	Plate Thickness
DB65	8 - 12
	12 - 17
	17 - 22

Model #	Plate Thickness
KSPB	8 - 28
	25 - 45

CalgonCarbon	EXPANSION JOINTS MATERIAL SPECIFICATION	SPEC NO:
	RUBBER EXPANSION JOINT, DOUBLE ARCH TYPE	24.06

SAP PART NUMBER:

CCC DRAWING NUMBER:

MATERIAL: Rubber expansion joint, double arch type, molded neoprene reinforced with multiple plies of nylon. Joint allows 4 way movement and 30 DEG. angular misalignment. Has loose steel backing flanges to be galvanized or zinc plated, 150 # drilling. No gaskets required. Control unit assemblies for pressures specified as 135 psi or greater.

RATING: 225 psi @ 170 DEG. F.

MANUFACTURER: Dynex, Inc., Proco Products, Inc., or Approved Equal.

SIZES: 1" thru 12"

MODELS: Dynex Series 702, Proco Products, Inc., Model 242-A-NN-4, with "blue" I.D. label or Approved Equal.

Issue Date: 01/01/89 Revision Date: 08/30/99

Approved by Matthew R. McGowan on 08/30/99

PROCO

The Expansion Joint and Check Valve People

CCC SPEC 24.06

Molded Spherical Joints Style 240/242

Proco Style 240/242 Molded Spherical Joints

Proco Style 240/242 Spherical Molded Expansion Joints are designed for piping systems to absorb pipe movements, relieve stress, reduce system noise/vibration, compensate for misalignment/offset and to protect rotating mechanical equipment against start-up surge forces.

The molded style 240 single sphere and 242 twin sphere designed bellows are inherently stronger than the conventional hand-built style spool arch type. Internal pressure within a "sphere" is exerted in all directions, distributing forces evenly over a larger area. The spherical design "flowing arch" reduces turbulence and sediment buildup.

Features and Benefits:

Absorbs Directional Movement

Thermal movements appear in any rigid pipe system due to temperature changes. The Style 240 and Style 242 spherical arch expansion joints allow for axial compression or axial extension, lateral deflection as well as angular movement. (Note: Rated movements in this publication are based on one plane movements. Multiple movement conditions are based on a multiple movement calculation. Contact Proco for information when designing multiple pipe movements.)

Easy Installation with Rotating Metallic Flanges

The floating metallic flanges freely rotate on the bellows, compensating for mating flange misalignment, thus speeding up installation time. Gaskets are not required with the Style 240 or Style 242, provided the expansion joints are mated against a flat face flange as required in the installation instructions.

Flange Materials/Drilling

The Proco Style 240 and Style 242 molded expansion joints are furnished complete with plated carbon steel flanges for corrosion protection. 304 or 316 stainless steel flanges are available upon request as well as ANSI 250/300 lb., BS-10, DIN PN10 & PN16 and JIS-10K drilling.

Absorbs Vibration, Noise and Shock

The Proco Style 240 and Style 242 molded expansion joints effectively dampen and insulate downstream piping against the transmission of noise and vibration generated by mechanical equipment. Noise and vibration caused by equipment can cause stress in pipe, pipe guides, anchors and other equipment downstream. Water hammer and pumping impulses can also cause strain, stress or shock to a piping system. Install the Style 240 or Style 242 molded expansion joints to help compensate for these system pressure spikes.

Wide Service Range with Low Cost

Engineered to operate up to 300 PSIG or 265°F, the Proco Style 240 and Style 242 can be specified for a wide range of piping requirements. Compared to conventional hand-built spool type joints, you will invest less money when specifying the mass-produced, consistent high quality, molded single or twin sphere expansion joints.

Material Identification

All Style 240 or Style 242 molded expansion joints have branded elastomer designations. Neoprene Tube/Neoprene Cover (NN) and Nitrile Tube/Neoprene Cover (NP) elastomer designated joints meet the Coast Guard Requirements and conform to ASTM F1123-87. 240C/NP-9 joints have ABS certification.

Large Inventory

Proco Products, Inc. maintains one of the largest inventories of rubber expansion joints in the world. Please contact us for price and availability.

Table 1: Available Styles • Materials

For Specific Elastomer Recommendations, See: **PROCO** "Chemical To Elastomer Guide"

240-A	240-C	240-AV,D,E,M	242-A,B,C	PROCO Material Code	Cover Elastomer [1]	Tube Elastomer [2]	Maximum Operating Temp. °F	Identifying Color Band/Label
		X	X	/BB[3]	Chlorobutyl	Chlorobutyl	250°	Black
		X	X	/EE[3]	EPDM	EPDM	250°	Red
X	X			/EE[3,4]	EPDM	FDA-EPDM	250°	Red
		X		/EQ[3]	EPDM	FDA-EPDM	250°	Red
X	X			/EE-9[3,5]	EPDM	EPDM	265°	DBL Red
	X			/ET-9[3,6]	EPDM	PTFE	265°	Red
	X			/HH	CSM	CSM	212°	Green
		X	X	/NH	Neoprene	CSM	212°	Green
	X			/NJ	Neoprene	FDA-Nitrile	212°	White
	X	X	X	/NN	Neoprene	Neoprene	225°	Blue
	X			/NT[6]	Neoprene	PTFE	225°	Blue
X	X	X	X	/NP	Neoprene	Nitrile	212°	Yellow
X	X			/NP-9[7]	Neoprene	Nitrile-ABS	212°	DBL Yellow

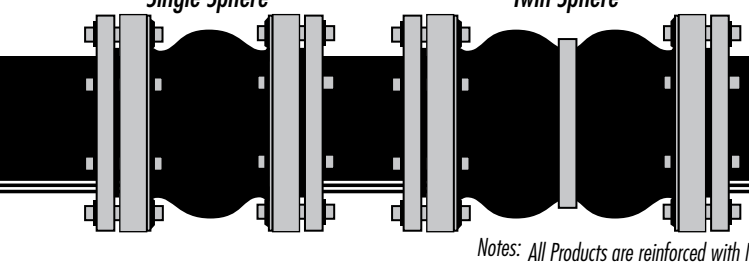

Protecting Piping and Equipment Systems from Stress/Motion

Notes:
All Products are reinforced with Nylon Tire Cord, except 240-A and 240-C which are reinforced with Polyester.
1. *All NN & NP elastomer designated joints meet the Coast Guard Requirements and conform to ASTM F 1123-87 and are marked accordingly.*
2. *Branding Label will be marked as "Food Grade".*
3. *BB, EE or EE-9 are good for 300°F blower service at 20 PSI or less.*
4. *240-A & 240-C expansion joints have black EPDM tube, but are FDA compliant.*
5. *EE-9 joints are peroxide cured.*
6. *Products with PTFE loose liner are not intended for vacuum service.*
7. *NP-9 joints have ABS certification.*
8. *All elastomers above are not intended for steam service.*

Information subject to change without notice.

Style 242 Twin Sphere Performance Data

Table 3: Sizes • Movements • Pressures • Flange Standards • Weights

NOMINAL Pipe Size I.D.	Neutral Length	PROCO Style Number [1]	242 Movement Capability: From Neutral Position [2]					Pressure [4]		Standard Flange Drilling Dimensions [8]					Weight in lbs	
			Axial Compression Inches	Axial Extension Inches	Lateral Deflection Inches	Angular Deflection Degrees	Thrust Factor [3]	Positive PSIG [5]	Vacuum [6] Inches of Hg	Flange O.D. Inches	Bolt Circle Inches	Number of Holes	Size of Holes Inches	Bolt Hole [7] Thread	Exp. Joint & Flanges	Control Unit Set (2 Rod)
1 (25)	10.00	242-C	2.000	1.188	1.750	45	4.43	225	26	4.25	3.13	4	0.625	—	5.2	3.6
1.25 (32)	7.0	**242-A**	2.000	1.188	1.750	45	6.34	225	26	4.63	3.5	4	0.625	1/2-13 UNC	5.3	3.5
	7.0	242-HA						300					0.625	—	6.5	3.5
	10.00	242-C						225					0.625	—	6.2	3.6
1.5 (40)	6.00	242-B	2.000	1.188	1.750	45	6.49	225	26	5.0	3.88	4	0.625	—	6.1	4.6
	6.00	242-HB						300					0.625	—	7.6	4.6
	7.00	**242-A**						225					0.625	1/2-13 UNC	6.8	4.8
	7.00	242-HA						300					0.625	—	8.3	4.8
	10.00	242-C						225					0.625	—	7.7	5.1
2 (50)	6.00	242-B	2.000	1.188	1.750	45	7.07	225	26	6.0	4.75	4	0.750	—	9.0	6.6
	7.00	**242-A**						225		6.0	4.75	4	0.750	—	9.0	7.0
	10.00	242-C						235		6.0	4.75	4	0.750	5/8-11 UNC	10.2	7.3
	6.00	Q-242-HB						300		6.0	4.75	4	0.750	—	10.5	6.6
	7.00	Q-242-HA						300		6.5	5.00	8	0.750	—	10.5	7.0
2.5 (65)	6.00	242-B	2.000	1.188	1.750	43	11.05	225	26	7.0	5.5	4	0.750	—	12.9	7.6
	7.00	**242-A**						225					0.750	—	13.3	8.0
	10.00	242-C						225					0.750	5/8-11 UNC	14.5	8.4
	6.00	Q-242-HB						300					0.750	—	15.3	7.6
	7.00	Q-242-HA						300					0.750	—	15.8	8.0
3 (80)	7.00	**242-A**	2.000	1.188	1.750	38	13.36	225	26	7.5	6.0	4	0.750	5/8-11 UNC	14.3	8.6
	9.00	242-B						225		7.5	6.0	4	0.750	—	15.2	9.0
	10.00	242-C						225		7.5	6.0	4	0.750	—	15.8	9.1
	12.00	242-C						300		7.5	6.0	4	0.750	—	16.0	9.9
	7.00	Q-242-HA						300		8.25	6.62	8	0.875	—	18.2	8.6
3.5 (90)	10.00	242-C	2.000	1.188	1.750	34	18.67	225	26	8.5	7.0	8	0.750	—	20.6	8.1
4 (100)	9.00	**242-A**	2.000	1.375	1.562	34	22.69	225	26	9.0	7.5	8	0.750	5/8-11 UNC	20.3	8.0
	10.00	242-C						225		9.0	7.5	8	0.750	—	21.3	8.2
	12.00	242-C						225		9.0	7.5	8	0.750	—	22.0	8.2
	9.00	Q-242-HA						300		10.0	7.88	8	0.750	3/4-10 UNC	26.4	8.0
5 (125)	9.00	**242-A**	2.000	1.375	1.562	29	30.02	225	26	10.0	8.5	8	0.875	—	24.5	8.3
	10.00	242-C						225		10.0	8.5	8	0.875	—	25.5	9.1
	12.00	242-C						225		10.0	8.5	8	0.875	—	26.0	9.1
	9.00	Q-242-HA						300		11.0	9.25	8	0.875	—	31.4	8.3
6 (150)	9.00	**242-A**	2.000	1.375	1.562	25	41.28	225	26	11.0	9.5	8	0.875	3/4-10 UNC	29.5	11.7
	10.00	242-C						225		11.0	9.5	8	0.875	—	30.5	11.9
	12.00	242-C						225		11.0	9.5	8	0.875	—	31.0	12.0
	14.00	242-C						225		11.0	9.5	8	0.875	—	32.0	12.0
	9.00	Q-242-HA						300		12.5	10.62	12	0.875	—	38.6	11.7
8 (200)	9.00	242-B	2.375	1.375	1.375	19	63.62	225	26	13.5	11.75	8	0.875	—	42.3	14.5
	10.00	242-C						225		13.5	11.75	8	0.875	—	43.4	15.0
	12.00	242-C						225		13.5	11.75	8	0.875	—	44.0	15.2
	13.00	**242-A**						225		13.5	11.75	8	0.875	—	43.8	15.4
	14.00	242-C						225		13.5	11.75	8	0.875	3/4-10 UNC	46.0	16.0
	9.00	Q-242-HB						300		15.0	13.0	12	1.000	—	55.4	14.5
	13.00	Q-242-HA						300		15.0	13.0	12	1.000	—	57.5	15.4

See Notes Page 6

Style 242 Twin Sphere Performance Data

Table 3: Sizes • Movements • Pressures • Flange Standards • Weights

NOMINAL Pipe Size I.D.	Neutral Length	PROCO Style Number [1]	242 Movement Capability: From Neutral Position [2]					Pressure [4]		Standard Flange Drilling Dimensions [8]					Weight in lbs	
			Axial Compression Inches	Axial Extension Inches	Lateral Deflection Inches	Angular Deflection Degrees	Thrust Factor [3]	Positive PSIG [5]	Vacuum [6] Inches of Hg	Flange O.D. Inches	Bolt Circle Inches	Number of Holes	Size of Holes Inches	Bolt Hole [7] Thread	Exp. Joint & Flanges	Control Unit Set (2 Rod)
10 (250)	12.00	242-B	2.375	1.375	1.375	15	103.87	225	26	16.0	14.25	12	1.000	—	64.1	23.5
	13.00	**242-A**						225		16.0	14.25	12	1.000	—	65.5	24.5
	14.00	242-C						225		16.0	14.25	12	1.000	7/8-9 UNC	66.7	24.5
	12.00	Q-242-HB						275		17.5	15.25	16	1.125	—	86.5	23.5
	13.00	Q-242-HA						275		17.5	15.25	16	1.125	—	88.4	24.5
12 (300)	12.00	242-B	2.375	1.375	1.375	13	137.89	225	26	19.0	17.00	12	1.000	—	94.0	30.0
	13.00	**242-A**						225		19.0	17.00	12	1.000	—	95.0	31.0
	14.00	242-C						225		19.0	17.00	12	1.000	7/8-9 UNC	99.1	31.0
	12.00	Q-242-HB						275		20.5	17.75	16	1.250	—	110.0	30.0
	13.00	Q-242-HA						275		20.5	17.75	16	1.250	—	110.0	31.0
14 (350)	13.75	**242-A**	1.750	1.118	1.118	9	182.65	150	26	19.0	18.75	12	1.125	—	112.0	32.0
16 (400)	12.00	242-C	1.750	1.118	1.118	8	240.53	125	26	23.5	21.25	16	1.125	—	124.0	28.8
	12.00	242-HC						175					1.125	—	160.0	28.8
	13.75	**242-A**						125					1.125	—	132.0	30.8
	13.75	242-HA						175					1.125	—	170.2	30.8
18 (450)	12.00	242-C	1.750	1.118	1.118	7	298.65	125	26	25.0	22.75	16	1.250	—	138.0	35.1
	13.75	**242-A**						125					1.250	—	146.0	36.1
	13.75	242-HA						175					1.250	—	181.2	36.1
20 (500)	12.00	242-C	1.750	1.118	1.118	7	363.05	125	26	27.5	25.0	20	1.250	—	172.0	35.0
	13.75	**242-A**						125					1.250	—	182.0	35.5
	13.75	242-HA						175					1.250	—	182.0	35.5
24 (600)	12.00	242-C	1.750	1.118	1.118	5	510.70	110	26	32.5	29.5	20	1.375	—	190.0	47.0
	13.75	**242-A**						110					1.375	—	220.0	48.0
	13.75	242-HA						160					1.375	—	266.2	48.0
30 (750)	12.00	242-C	1.750	1.118	1.118	4	779.31	110	26	38.75	36.0	28	1.375	—	270.0	62.0

NOTES:

Standard Proco Style 242-A Expansion Joints shown in Bold Type are considered Standards and are inventoried in large quantities.

1. *"HW" denotes Heavy Weight Construction. For sizes 2" I.D. thru 12" I.D., Proco will only offer these items with 300 lb. drilling and are denoted by Q-242-HW. All Q-240-HW units will only be sold with control units.*

2. *Movements shown in the above tables are non-concurrent.*

3. *Calculation of Thrust (Thrust Factor). When expansion joints are installed in the pipeline, the static portion of the thrust is calculated as a product of the area of the I.D. of the arch of the expansion joint times the maximum pressure (design, test or surge) that will occur in the line. The result is a force expressed in pounds.*
Take design, surge or test pressure X thrust factor to calculate end thrust.

"Effective Area"

Thrust Factor=

$T = \frac{\pi}{4}(D)^2, (P)$

T= Thrust
P= PSI (Design, Test or Surge)
D= Arch I.D.

4. *Pressure rating is based on 170°F operating temperature. The pressure rating is reduced at higher temperatures.*

5. *Pressures shown at maximum "operating pressure". Test pressure is 1.5 times "operating pressure". Burst pressure is 4 times "operating pressure". If factory hydro-test is required, an additional joint per size must be purchased and tested. Once hydro-tested this joint may not be sent to field for installation as the beaded end will have taken a (compressed) set and can not be reused.*

6. *Vacuum rating is based on neutral installed length, without external load. Products should not be installed in extension for vacuum applications. Flattening of the arch in extended mode will cause the arch to collapse.*

7. *Style 242A/NN (neoprene elastomer only) expansion joints 1.0" I.D. thru 12" I.D. are available with tapped (threaded) holes and must be specified at time of order.*

8. *In addition to standard 150 lb. drilled flanges, Proco can provide expansion joints listed above in 300 lb. drilling, BS-10 (British) drilling, Metric PN10 and PN16 drilling and JIS 10kg/cm drilling.*

Style 240/242 Drilling Chart

Table 4: Flange Drilling

NOMINAL Pipe Size Inch (mm)	American 125/150# Conforms to ANSI B16.1 and B16.5						American 250/300# Conforms to ANSI B16.1 and B16.5					British Standard 10:1962 Conforms to BS 10 Table E				
	Flange Thickness	Flange O.D.	Bolt Circle	No. of Holes	Drilled Hole Size	Threaded Hole Size	Flange Thickness	Flange O.D.	Bolt Circle	No. of Holes	Hole Size	Flange Thickness	Flange O.D.	Bolt Circle	No. of Holes	Hole Size
1 (25)	0.55 (14.0)	4.25 108.0	3.13 79.4	4 4	0.62 15.9	1/2 - 13 UNC	0.63 16.0	4.88 124.0	3.5 88.9	4 4	0.75 19.1	0.59 15.0	4.5 114.0	3.25 82.6	4 4	0.62 15.9
1.25 (32)	0.55 (14.0)	4.63 118.0	3.5 88.9	4 4	0.62 15.9	1/2 - 13 UNC	0.63 16.0	5.25 133.0	3.88 98.4	4 4	0.75 19.1	0.59 15.0	4.75 121.0	3.44 87.3	4 4	0.62 15.9
1.5 (40)	0.55 (14.0)	5.0 127.0	3.88 98.4	4 4	0.62 15.9	1/2 - 13 UNC	0.63 16.0	6.12 156.0	4.50 114.3	4 4	0.88 22.2	0.59 15.0	5.25 133.0	3.88 98.4	4 4	0.62 15.9
2 (50)	0.63 (16.0)	6.0 152.0	4.75 120.7	4 4	0.75 19.1	5/8 - 11 UNC	0.71 18.0	6.50 165.0	5.00 127.0	8 8	0.75 19.1	0.63 16.0	6.0 152.01	4.5 114.3	4 4	0.75 19.1
2.5 (65)	0.71 18.0	7.0 178.0	5.5 139.7	4 4	0.75 19.1	5/8 - 11 UNC	0.71 18.0	7.5 191.0	5.88 149.2	8 8	0.88 22.2	0.71 18.0	6.5 165.0	5.0 127.0	4 4	0.75 19.1
3 (80)	0.71 18.0	7.5 191.0	6.0 152.4	4 4	0.75 19.1	5/8 - 11 UNC	0.79 20.0	8.25 210.0	6.62 168.2	8 8	0.88 22.2	0.71 18.0	7.25 184.0	5.75 146.1	4 4	0.75 19.1
3.5 (90)	0.71 18.0	8.5 216.0	7.0 177.8	8 8	0.75 19.1	5/8 - 11 UNC	0.79 20.0	9.0 229.0	7.25 184.2	8 8	0.88 22.2	0.71 18.0	8.0 203.0	6.5 165.1	8 8	0.75 19.1
4 (100)	0.71 18.0	9.0 229.0	7.5 190.5	8 8	0.75 19.1	5/8 - 11 UNC	0.79 20.0	10.0 254.0	7.88 200.0	8 8	0.88 22.2	0.71 18.0	8.5 216.0	7.0 177.8	8 8	0.75 19.1
5 (125)	0.79 20.0	10.0 254.0	8.5 215.9	8 8	0.88 22.2	3/4 - 10 UNC	0.87 22.0	11.0 279.0	9.25 235.0	8 8	0.88 22.2	0.79 20.0	10.0 254.0	8.25 209.6	8 8	0.75 19.1
6 (150)	0.87 22.0	11.0 279.0	9.5 241.3	8 8	0.88 22.2	3/4 - 10 UNC	0.87 22.2	12.5 318.0	10.62 269.9	12 12	0.88 22.2	0.87 22.2	11.0 279.0	9.25 235.0	8 8	0.88 22.2
8 (200)	0.87 22.0	13.5 343.0	11.75 298.5	8 8	0.88 22.2	3/4 - 10 UNC	0.95 24.0	15.0 381.0	13.0 330.2	12 12	1.00 25.4	0.87 1 22.2	3.25 337.0	11.5 292.1	8 8	0.88 22.2
10 (250)	0.95 24.0	16.0 406.0	14.25 362.0	12 12	1.00 25.4	7/8 - 9 UNC	1.02 26.0	17.5 445.0	15.25 387.4	16 16	1.13 28.6	0.95 24.0	116.0 406.0	14.0 355.6	12 12	0.88 22.2
12 (300)	0.95 24.0	19.0 483.0	17.0 431.8	12 12	1.00 25.4	7/8 - 9 UNC	1.02 26.0	20.5 521.0	17.75 450.9	16 16	1.25 31.8	0.95 24.0	18.0 457.0	16.0 406.4	12 12	1.00 25.4
14 (350)	1.02 26.0	21.0 533.0	18.75 476.3	12 12	1.13 28.6	1 - 8 UNC	1.10 28.0	23.0 584.0	20.25 514.4	20 20	1.25 31.8	1.02 26.0	20.75 527.0	18.5 469.9	12 12	1.00 25.4
16 (400)	1.10 28.0	23.5 597.0	21.25 539.8	16 16	1.13 28.6	1 - 8 UNC	1.18 30.0	25.5 648.0	22.5 571.5	20 20	1.38 34.9	1.10 28.0	22.75 578.0	20.5 520.7	12 12	1.00 25.4
18 (450)	1.18 30.0	25.0 635.0	22.75 577.9	16 16	1.25 31.8	1 1/8 - 7 UNC	1.18 30.0	28.0 711.0	24.75 628.7	24 24	1.38 34.9	1.18 30.0	25.25 641.0	23.0 584.2	16 16	1.00 25.4
20 (500)	1.18 30.0	27.5 699.0	25.0 635.0	20 20	1.25 31.8	1 1/8 - 7 UNC	1.18 30.0	30.5 775.0	27.0 685.8	24 24	1.38 34.9	1.18 30.0	27.75 705.0	25.25 641.4	16 16	1.00 25.4
24 (600)	1.18 30.00	32.06 813.0	29.5 749.3	20 20	1.38 34.9	1 1/4 - 7 UNC	1.18 30.0	36.0 914.0	32.0 812.8	24 24	1.62 41.3	1.18 30.0	32.5 826.0	29.75 755.7	16 16	1.25 31.8
30 (750)	1.26 32.0	38.75 984.0	36.0 914.4	28 28	1.38 34.9	1 1/4 - 7 UNC	1.26 32.0	43.0 1092.0	39.25 997.0	28 28	2.00 50.8	1.26 32.0	39.25 997.0	36.5 927.1	20 20	1.38 34.9

Installation Instructions for Non-Metallic Expansion Joints with Beaded End Flanges

1. Service Conditions:

Make sure the expansion joint rating for temperature, pressure, vacuum*, movements and selection of elastomeric materials match the system requirements. Contact the manufacturer if the system requirements exceed those of the expansion joint selected.
(*Vacuum service for spherical rubber connectors: Vacuum rating is based on neutral installed length. These products should not be installed "extended" on vacuum applications.)

2. Alignment:

Expansion joints are not designed to make up for piping misalignment errors. Piping misalignment should be no more than 1/8" in any direction. Misalignment of an expansion joint will reduce the rated movements and can induce severe stress of the material properties, thus causing reduced service life.

3. Anchoring:

Anchors are required wherever the piping system changes direction. Expansion joints should be located as close as possible to anchor points. If an anchoring system is not used, it is recommended that control rods be installed on the expansion joint to prevent excessive movements from occurring due to pressure thrust of the line.

4. Pipe Support:

Piping must be supported so expansion joints do not carry any pipe weight.

5. Mating Flanges:

Install the expansion joint against the mating pipe flanges and install bolts so that the bolt head is against the expansion joint flange. Flange-to-flange dimension of the expansion joint must match the breech opening*. (*A spherical rubber connector must be compressed 1/8" to 3/16" during installation in order to obtain a correct installed face-to-face dimension.)

Make sure the mating flanges are clean and are a flat-faced type. When attaching beaded end flange expansion joints to raised face flanges, the use of metal gaskets are required to prevent metal flange faces from cutting rubber bead during installation.
Never install expansion joints next to wafer type check or butterfly valves. Serious damage to the rubber flange bead can result due to lack of flange mating surface and/or bolt connection.

6. Bolting Torque:

Table 8 shows the recommended torque values for non-metallic expansion joints with beaded end type-flanges: Tighten bolts in stages by alternating around the flange. Use the recommended torque values in Table 8 to achieve a good seal. Never tighten an expansion joint to the point that there is metal-to-metal contact between the expansion joint flanges and the mating flanges. A slight bulge in the rubber beaded end should create a flush tight seal.
Note: Torque values are approximate due to mating flange surfaces, installation offsets, operating pressures and environmental conditions.

7. Storage:

Ideal storage is in a warehouse with a relatively dry, cool location. Store flanges face down on a pallet or wooden platform. Do not store other heavy items on top of the expansion joints. Ten year shelf life can be expected with ideal conditions. If storage must be outdoors, place on a wooden platform and joints should not be in contact with the ground. Cover with a tarpaulin.

8. Large Joint Handling:

Do not lift with ropes or bars through the bolt holes. If lifting through the bore, use padding or a saddle to distribute the weight. Make sure cables or forklift tines do not contact the rubber. Do not let expansion joints sit vertically on the edges of the flanges for any period of time.

9. Additional Tips:

A. Do not insulate over a non-metallic expansion joint. This facilitates inspection of the tightness of the joint bolting.
B. It is acceptable (but not necessary) to lubricate the expansion joint flanges with a thin film of graphite dispersed in glycerin or water to ease disassembly at a later time.
C. Do not weld in the near vicinity of a non-metallic joint.
D. If expansion joints are to be installed underground, or will be submerged in water, contact manufacturer for specific recommendations.
E. If the expansion joint will be installed outdoors, make sure the cover material will withstand ozone, sunlight, etc.
F. Check the tightness of lead-free flanges two or three weeks after installation and retighten if necessary.

Warning: Expansion joints may operate in pipelines or equipment carrying fluids and/or gasses at elevated temperature and pressures and may transport hazardous materials. Precautions should be taken to protect personnel in the event of leakage or splash. Rubber joints should not be installed in areas where inspection is impossible. Make sure proper drainage is available in the event of leakage when operating personnel are not available.

Installation Instructions for Non-Metallic Expansion Joints with Beaded End Flanges

Table 8:	Bolt-Torque				
Nominal Pipe Size Expansion Joint I.D. Inch /(mm)	Step 1 FT-LBS (Nm)	Rest	Step 2 FT-LBS (Nm)	Rest	Step 3 FT-LBS (Nm)
1 (25)	18 (25)	30 Min	30 (40)	60 Min	45-60 (60-80)
1.25 (32)	18 (25)	30 Min	30 (40)	60 Min	45-60 (60-80)
1.5 (40)	18 (25)	30 Min	30 (40)	60 Min	45-60 (60-80)
2 (50)	18 (25)	30 Min	30 (40)	60 Min	45-60 (60-80)
2.5 (65)	18 (25)	30 Min	35 (50)	60 Min	50-60 (70-80)
3 (80)	25 (35)	30 Min	45 (60)	60 Min	60-75 (80-100)
3.5 (90)	25 (35)	30 Min	45 (60)	60 Min	60-75 (80-100)
4 (100)	25 (35)	30 Min	45 (60)	60 Min	60-75 (80-100)
5 (125)	25 (35)	30 Min	45 (60)	60 Min	60-75 (80-100)
6 (150)	30 (40)	30 Min	50 (70)	60 Min	60-75 (80-100)
8 (200)	30 (40)	30 Min	50 (70)	60 Min	60-75 (80-100)
10 (250)	30 (40)	30 Min	50 (70)	60 Min	75-85 (100-115)
12 (300)	30 (40)	30 Min	50 (70)	60 Min	75-85 (100-115)
14 (350)	30 (40)	30 Min	60 (80)	60 Min	75-95 (110-130)
16 (400)	30 (40)	30 Min	60 (80)	60 Min	75-95 (110-130)
18 (450)	30 (40)	30 Min	60 (80)	60 Min	90-95 (120-130)
20 (500)	30 (40)	30 Min	65 (90)	60 Min	95-185 (130-250)
24 (600)	30 (40)	30 Min	65 (90)	60 Min	95-185 (130-250)
30 (750)	30 (40)	30 Min	65 (90)	60 Min	95-220 (130-300)

Note: Bolt torque based on new bolts and nuts

Right: Flanges with correct ID help prevent damage to rubber.

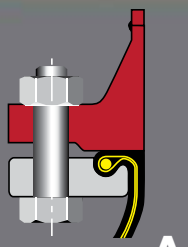

Wrong: Insure matting flanges I.D. is flush with rubber.

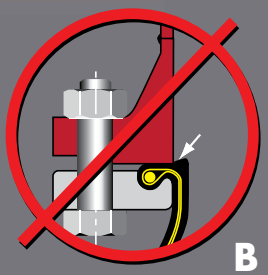

Right: Weld neck flanges with correct ID prevent damage to rubber.

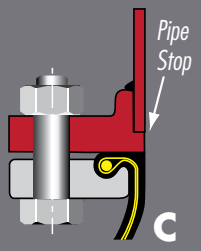

Wrong: Uneven end of pipe can cause damage to rubber.

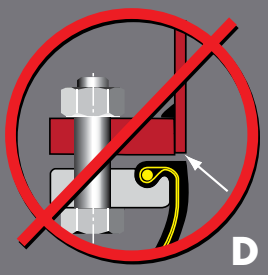

Right: In case of B, D, F an additional metal gasket can be used to prevent damage to rubber.

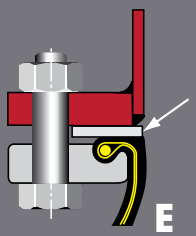

Wrong: Inner edge of flanges damages rubber.

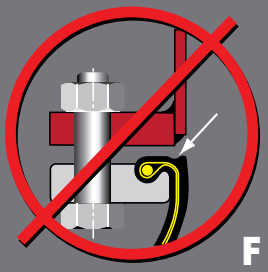

Right: Well rounded smooth edge prevents damage to rubber.

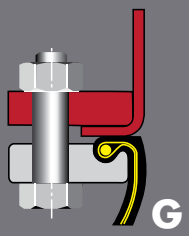

Tighten opposing nuts/bolts gradually according to the following sequence

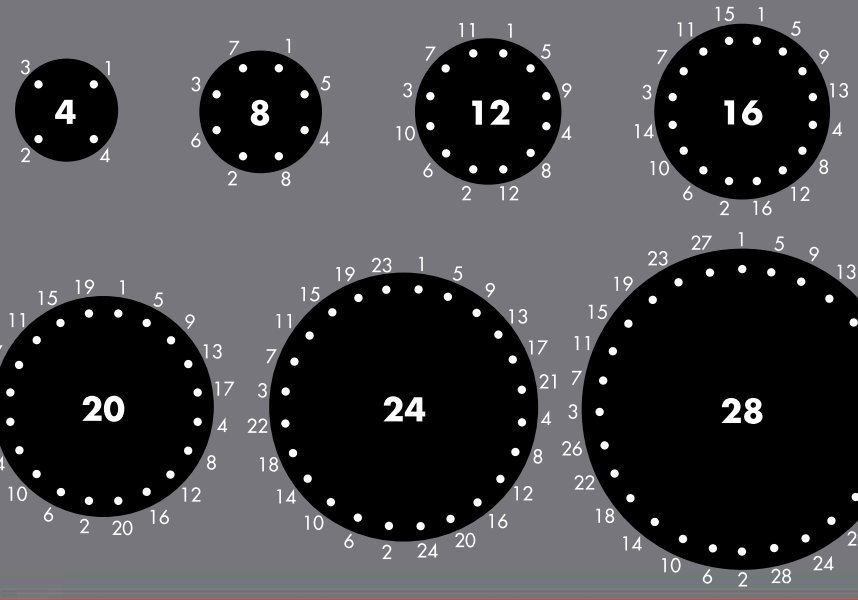

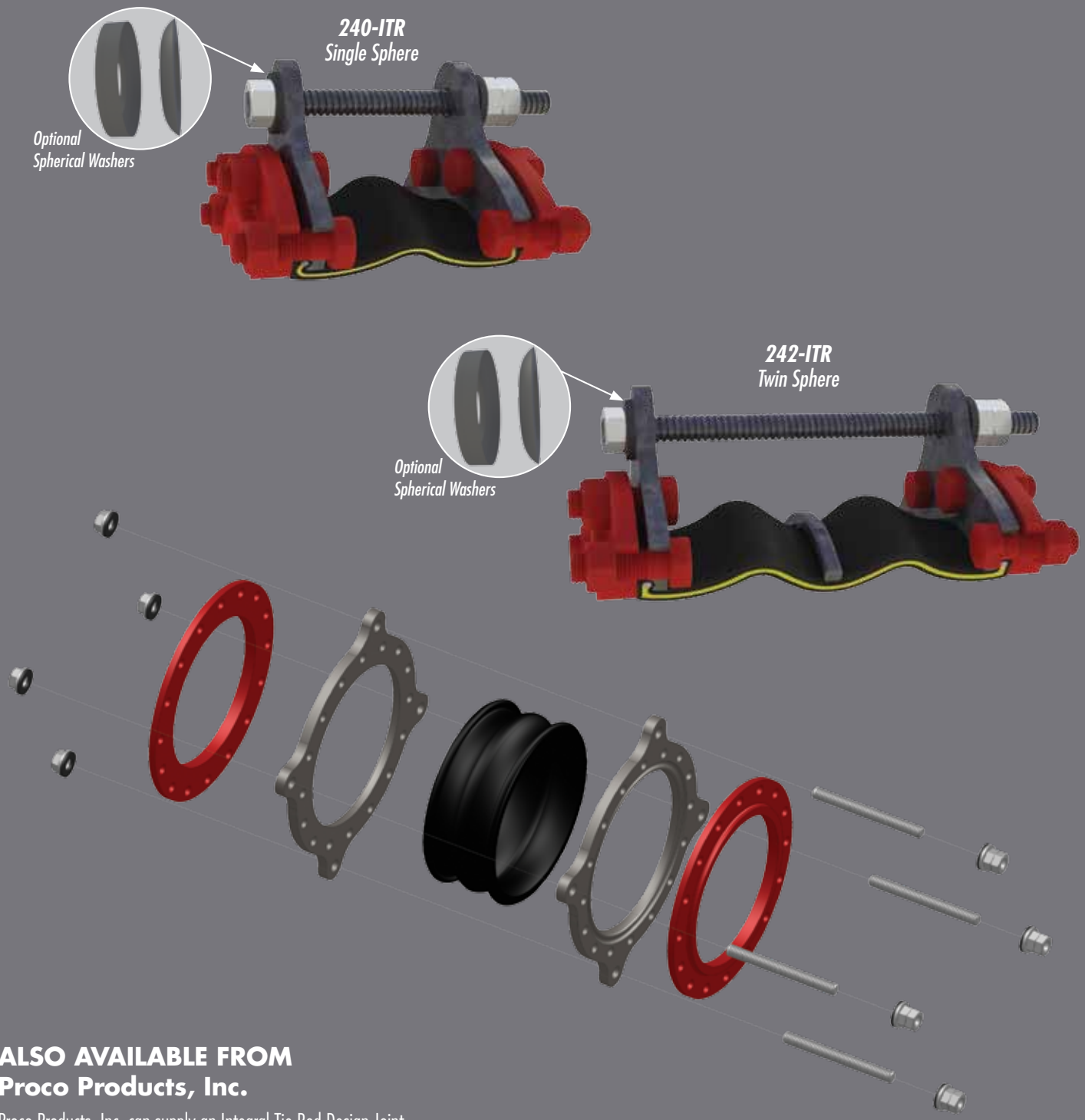

ALSO AVAILABLE FROM
Proco Products, Inc.

Proco Products, Inc. can supply an Integral Tie Rod Design Joint when space prohibits use of typical rod designs.

PROCO PRODUCTS, INC.

2431 North Wigwam Dr. (95205)
P.O. Box 590 • Stockton, CA
95201-0590 • USA

Toll-Free Phone: (800) 344-3246
Facsimile: (209) 943-0242
(209) 943-6088
email: sales@procoproducts.com
website: http://www.procoproducts.com

NATIONWIDE AND CANADA

INTERNATIONAL

American Water Works Association

IDCO Industrial Distributor Co-op

NAHAD Charter Listed Member — Safety · Quality · Reliability

Fluid Sealing Association FSA

Water Environment Federation® — Preserving & Enhancing the Global Water Environment — MEMBER

REPRESENTED BY:

Revised 3/11

CalgonCarbon	HOSE FITTINGS MATERIAL SPECIFICATION	SPEC NO:
	UNIVERSAL HOSE COUPLING - MALLEABLE IRON	32.40

SAP PART NUMBER:

CCC DRAWING NUMBER:

MATERIAL: Universal Hose Coupling, Malleable iron, male pipe thread on one end with other end for connecting to universal coupling.

RATING: 90 psig @ 140 DEG. F.

MANUFACTURER: Chicago Pneumatic, or equal.

SIZES:
1/4" - C-36844Y
3/8" - C-36843Y
1/2" - C-36842Y
3/4" - C-36841Y
1" - C-36840Y

NOTE: Above model number includes one standard type rubber gasket No. C-101158Y for air service. For water service use neoprene gasket No. C-101160Y.

Issue Date: Revision Date:

Approved by Joseph P. McMahon on 10/30/98

HOSE END

Ductile Iron (machined serrations)

hose size	part number	list each
3/8	UH-38	7.98
1/2	UH-2	4.99
5/8	UH-58	7.61
3/4	UH-3	5.15
1	UH-4	6.88

Brass (machined serrations)

3/8	UHB-38	–
1/2	UHB-2	12.60
5/8	UHB-58	–
3/4	UHB-3	14.49
1	UHB-4	18.59

316 Stainless (machined serrations)

1/2	UHSS-2	43.47
3/4	UHSS-3	36.71
1	UHSS-4	40.57

FEMALE NPT

Ductile Iron

npt size	part number	list each
3/8	UF-38	6.88
1/2	UF-2	6.30
3/4	UF-3	5.93
1	UF-4	7.72

Brass

3/8	UFB-38	–
1/2	UFB-2	–
3/4	UFB-3	–
1	UFB-4	–

316 Stainless

1/2	UFSS-2	44.71
3/4	UFSS-3	38.75
1	UFSS-4	41.73

MALE NPT

Ductile Iron

npt size	part number	list each
3/8	UM-38	6.88
1/2	UM-2	5.72
3/4	UM-3	6.09
1	UM-4	6.83

Brass

3/8	UMB-38	–
1/2	UMB-2	–
3/4	UMB-3	–
1	UMB-4	–

316 Stainless

1/2	UMSS-2	44.71
3/4	UMSS-3	38.75
1	UMSS-4	41.73

BLANK END

Ductile Iron

size	part number	list each
All	UB	9.82

Brass

All	UBB	–

THREE WAY

Ductile Iron

size	part number	list each
All	UTW	17.85

Brass

All	UTWB	–

UNIVERSAL WASHER

Nitrile

size	part number	list each
All	UG	0.53

Never use Universal Washers in UniversaLock Couplings

SAFETY CLIP

size	part number	list each
All	SC	0.26

TWO-BOLT UNIVERSAL CLAMP

Ductile Iron

hose o.d. min to max	part no.	list each
3/4 to 15/16	UC-2	5.78
1 to 1-1/4	UC-3	5.83
1-1/4 to 1-17/32	UC-4	10.08

DISTRIBUTOR AUTHORIZATION

Safety is of paramount concern to everyone. Due to the volatile nature of compressed air, and in accordance with our ISO 9000 quality system, we reserve the right to restrict sales of our UniversaLock® Couplings to only those distributors authorized by Campbell Fittings.

Please contact our customer service department for more information.

HOSE END

Ductile Iron (machined serrations)

hose size	part number	list each
1/2	ULH-2	19.10
3/4	ULH-3	19.10
1	ULH-4	19.10

MALE END

Ductile Iron

npt size	part number	list each
1/2	ULM-2	19.10
3/4	ULM-3	19.10
1	ULM-4	19.10

FEMALE END

Ductile Iron

npt size	part number	list each
1/2	ULF-2	19.10
3/4	ULF-3	19.10

UNIVERSALOCK WASHER

Nitrile

size	part number	list each
All	ULW	2.13

Never use UniversaLock Washers in standard Universal Couplings

CalgonCarbon	HOSE FITTINGS MATERIAL SPECIFICATION	SPEC NO:
	QUICK DISCONNECT MALE ADAPTER - ALUMINUM	32.60

SAP PART NUMBER:

CCC DRAWING NUMBER:

MATERIAL: Quick disconnect male adapter, Aluminum, male NPT on one end with other end for connecting to quick disconnect female coupler.

RATING: 150 psig @ 100 DEG. F.

MANUFACTURER: Dixon, Ever-Tite

SIZES: 1/2" thru 4"

MODELS: Dixon "Andrews" line, type F, Ever-Tite Part F, or equal.

Issue Date: 04/16/90 Revision Date: 09/15/99

Approved by Matthew R. McGowan on 09/27/99

"EZ BOSS-LOCK"

No more fumbling with clamps, wire, clips or pins . .
Just close the handles and the locking mechanism is engaged.

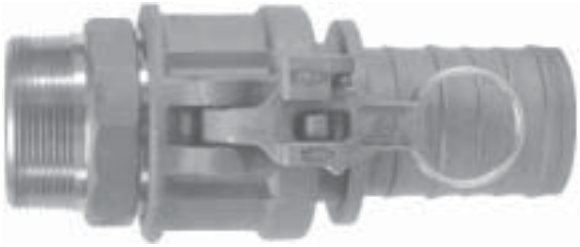

Unlike other safety couplings . . .

- **The EZ Boss-Lock is extremely EASY TO OPEN!!!** *The release lever is under your thumb when you want to open the fitting.* **ERGONOMIC.**
- **The EZ Boss-Lock is resistant to accidental disconnection when being dragged.** *The release lever opens in the direction opposite to the cam arm, so movements that tend to open the release lever also tend to close the cam arm!!!*
- **The EZ Boss-Lock alerts you if it is not properly engaged.** *If the rotating lever is not flush with the handle, it is not properly engaged.*
- **The EZ Boss-Lock has no sliding pins to jam**. *The EZ Boss-Lock's rotating action helps keep the locking device free of debris.*
- **The EZ Boss-Lock has no sliding pins to pop open.** *The EZ Boss-Lock is designed to protect critical parts from impact and to withstand rugged use.*
- **The EZ Boss-Lock can be supplied with special shanks custom suited to your needs.** *The EZ Boss-Lock is available with Swaged and PF shank designs, for hard to couple chemical hoses.*
- **The EZ Boss-Lock cam arm assemblies are made of investment cast Stainless Steel with plated Carbon Steel pull rings.**
- **The EZ Boss-Lock is easier to insert into the hose tubes on Tank Trucks, and easier to use in restricted spaces.** *This is due to the smaller maximum O.D. and a more snag free exterior.*
- **The EZ Boss-Lock Cam Arm assemblies can be retrofitted onto Undamaged Stainless Steel Boss-Lock.** *This allows you to protect your investment in Stainless Steel Boss-Lock couplings while you upgrade.*
- **The EZ Boss-Lock is Made in the USA.**

All measurements in this brochure are for reference only and are subject to change. Where dimensions are critical, please consult the factory. For products not shown or special application questions, please consult the factory.

CAM & GROOVE LINE DRAWINGS

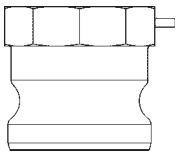

TYPE A
(male adapter x female NPT)

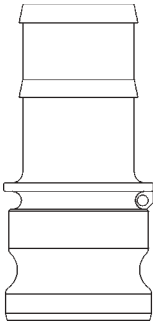

TYPE E
(male adapter x hose shank)

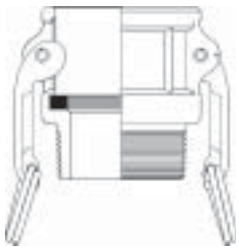

TYPE B
(female coupler x male NPT)

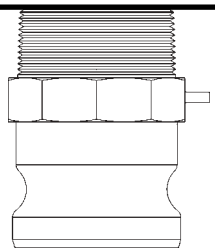

TYPE F
(male adapter x male NPT)

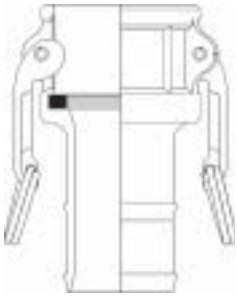

TYPE C
(female coupler x hose shank)

TYPE DC *
(dust cap)

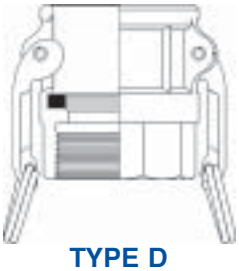

TYPE D
(female coupler x female NPT)

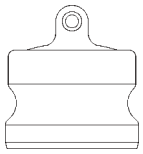

TYPE DP *
(dust plug)

NOTE: Line drawings are representative of the Dixon / "Andrews" line of cam and groove.

** Dust Caps and Dust Plugs are NOT to be used in Pressure Applications for safety and environmental reasons.*

WARNING:
SAFETY ALERT
UNDER NO CIRCUMSTANCES should Cam and Groove couplings be used for compressed air or steam service!

6 Dixon "Andrews" / "Boss-Lock" Type F Adapters

Male Adapter x Male NPT

Size	Aluminum Part #	Aluminum Hard Coat Part #	Brass Part #	Unplated Malleable Iron Part #	Plated Malleable Iron Part #	Stainless Steel Part #
1/2"	***50-F-AL***	***----***	***50-F-BR***	***----***	***----***	***50-F-SS***
3/4" x 1/2"	***7550-F-AL***	***----***	***7550-F-BR***	***----***	***----***	***7550-F-SS***
3/4"	***75-F-AL***	***----***	***75-F-BR***	***----***	***75-F-PM***	***75-F-SS***
1"	***100-F-AL***	***----***	***100-F-BR***	***----***	***100-F-PM***	***100-F-SS***
1 1/4"	***125-F-AL***	***----***	***125-F-BR***	***----***	***----***	***125-F-SS***
1 1/2"	***150-F-AL***	***150-F-ALH***	***150-F-BR***	***150-F-MI***	***150-F-PM***	***150-F-SS***
2"	***200-F-AL***	***200-F-ALH***	***200-F-BR***	***200-F-MI***	***200-F-PM***	***200-F-SS***
2 1/2"	***250-F-AL***	***----***	***250-F-BR***	***----***	***250-F-PM***	***250-F-SS***
3"	***300-F-AL***	***300-F-ALH***	***300-F-BR***	***300-F-MI***	***300-F-PM***	***300-F-SS***
4"	***400-F-AL***	***400-F-ALH***	***400-F-BR***	***400-F-MI***	***400-F-PM***	***400-F-SS***
5"	***500-F-AL***	***----***	***----***	***----***	***----***	***----***
6"	***600-F-AL***	***600-F-ALH***	***600-F-BR***	***----***	***600-F-PM***	***600-F-SS***
8" AND*	***800-F-AL***	***----***	***----***	***----***	***----***	***----***
8" BL*	***801-F-AL***	***----***	***----***	***----***	***----***	***----***

* "Andrews" and "Boss-Lock" Cam and Groove Couplings **DO NOT INTERCHANGE IN THE 8" SIZE.**

SAFETY ALERT

- The 8" "Boss-Lock" were designed to interchange with 8" Cam & Groove Couplings manufactured by P.T. Coupling.

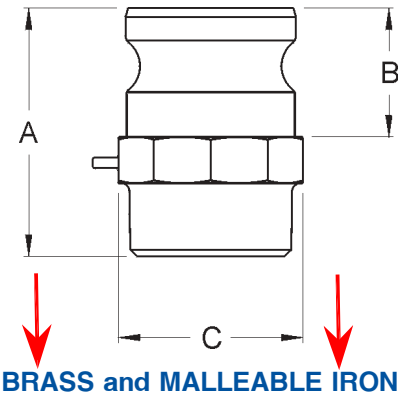

ALUMINUM, BRASS and MALLEABLE IRON DIMENSIONS

Size	1/2"	3/4 x 1/2"	3/4"	1"	1 1/4"	1 1/2"	2"	2 1/2"	3"	4"	5"	6"	8" AND	8" BL
A Overall Length	2 1/8	2 7/16	2 1/16	2 3/8	2 15/16	3 5/32	3 17/32	4 3/8	4 15/32	4 21/32	4 1/2	5 17/32	6 15/16	6 3/8
B Adapter Length	1	1	1	1 5/16	1 9/16	1 5/8	1 7/8	1 15/16	2	2 1/16	2 5/16	2 1/4	3 9/16	3 1/16
C Distance Across Flats	1	1 5/16	1 3/8	1 1/2	1 7/8	2 1/4	2 11/16	3 1/4	3 3/4	5	6 1/2*	8 1/32*	10 5/8*	10 5/8*

STAINLESS STEEL DIMENSIONS

Size	1/2"	3/4 x 1/2"	3/4"	1"	1 1/4"	1 1/2"	2"	2 1/2"	3"	4"	5"	6"	8" AND	8" BL
A Overall Length	2 1/8	2 1/4	2 1/16	2 23/32	2 15/16	3 1/8	3 21/32	4 5/16	4 17/32	4 59/64	------	4 15/16	------	------
B Adapter Length	1	1	1	1 5/16	1 9/16	1 5/8	1 7/8	1 15/16	2	2 1/16	------	2 1/4	------	------
C Distance Across Flats	1	1 5/16	1 5/16	1 1/2	1 7/8	2 1/4	2 11/16	3 1/4	3 3/4	5	------	7 3/4*	------	------

* Distance Over Lugs

CalgonCarbon	CARBON STEEL PIPE MATERIAL SPECIFICATION	SPEC NO:
	CARBON STEEL PIPE WITH STEEL FITTINGS	C02

SAP PART NUMBER:

CCC DRAWING NUMBER:

MATERIAL:
Carbon steel pipe with steel fittings

RATING:
125 PSIG @ 350 DEG. F, 200 PSIG @ 150 DEG. F, Includes corrosion allowance of 0.050" min.

CONSTRUCTION:
Screwed for 1 1/2" and smaller, welded and/or flanged for 2" and larger.

PIPE:
Carbon steel, ASTM A53, Grade B: Threaded, schedule 80, seamless, 1 1/2" and smaller, plain end, schedule 40, seamless, 2" to 10", Plain end, 3/8" wall, seamless, 12" and above.

FITTINGS:
3000 lb ANSI B16.11, forged steel, threaded ends, 1 1/2" and smaller. Schedule 40, ANSI B16.9, ASTM A234, Grade WPB, carbon steel, butt welding ends, 2"-12". 3/8" wall, ANSI B16.9, ASTM A234, Grade WPB, carbon steel, butt welding ends, 14" to 24", or 125# flanged cast iron elbows and tees, ASTM A126, Class B with 125# ANSI B16.1 drilling with dimensions per ANSI A21.10 (AWWA C110). Location of tapped holes for drains shall be in accordance with ANSI B16.1. Use thread-o-lets on branch connections 1-1/2" and smaller, use stub-in or reducing tee connections for 2" and above.

UNIONS:
3000 lb forged steel, ASTM A105, Grade 2, integral steel seat, ground joint, threaded ends.

FLANGES:
150 lb ANSI B16.5, ASTM A105 forged carbon steel, slip-on, weld neck, or MSS lap joint/stub end for 2" and larger, threaded 1 1/2" and smaller. Where bolting to flat face cast iron flanges, flanges shall be furnished with a flat face. Others shall be raised face.

Issue Date: 12/01/89 Revision Date: 03/25/2008

Approved by Joseph P. McMahon on 03/25/2008

CalgonCarbon	CARBON STEEL PIPE MATERIAL SPECIFICATION	SPEC NO:
	GALVANIZED CARBON STEEL PIPE	C13

SAP PART NUMBER:

CCC DRAWING NUMBER:

MATERIAL: Galvanized carbon steel pipe with galvanized iron or steel fittings.

RATING: 275 PSIG @ -20 to 150 DEG. F
215 PSIG @ 350 DEG. F Includes corrosion allowance of 0.050" minimum.

CONSTRUCTION: Screwed 3" and smaller
No bending permitted

PIPE: Galvanized carbon steel, ASTM A53:
Threaded, schedule 40, butt welded seam 2" and smaller.
Threaded schedule 40, butt welded seam or seamless, 2 1/2" and 3".

FITTINGS: 150 lb., ANSI B16.3, ASTM A197, galvanized malleable iron, banded, threaded ends.

UNIONS: 150 LB., ASTM A197, galvanized malleable iron, integral iron seat, ground joint, threaded ends.

FLANGES: 150 lb., ANSI B16.5, ASTM A105, Grade 1, galvanized forged carbon steel, threaded.

Where bolting to flat face cast iron flanges, steel flanges shall be furnished with a flat face. Others shall be raised face

ORIFICE FLANGES: Instrument item.

BOLTING: See attached Fastener Specification F03.

GASKETS: See attached Gasket Specification G02.

Issue Date: 12/01/89 Revision Date: 04/10/92

Approved by Gerald Kirner on 11/09/2005

CalgonCarbon	FASTENER MATERIAL SPECIFICATION	SPEC NO:
		F03

SAP PART NUMBER:

CCC DRAWING NUMBER:

MATERIAL:
Hex Bolt, low or medium carbon steel, ASTM A307 Grade B.
1/4" through 4" Proof load 55,000 psi.
1/4" through 4" Tensile strength: 60,000 psi minimum, 100,000 psi maximum.
Zinc plated.
Threads to be UNC unless specified UNF bolts to include (1) heavy hex nut, ASTM A563, Grade A.

Issue Date: 01/01/89 Revision Date: 07/16/2001

Approved by Matthew R. McGowan on 07/16/2001

CalgonCarbon	GASKET MATERIAL SPECIFICATION	SPEC NO:
	1/8" EPDM RUBBER (FDA)	G-46

SAP PART NUMBER:

CCC DRAWING NUMBER:

MATERIAL:	EPDM, Color: Off-White, 1/8" thick.
RATING:	Durometer (Shore A +/- 5): 60
MANUFACTURER:	Garlock or equal.
SIZES:	Pipe gasket flange dimension per ANSI B16.21
MODELS:	Garlock- 8316 or equal.
SPECIFICATIONS:	Meets FDA Requirements

SERVICE CONDITIONS:
Temperature: -40 thru 300 degrees F. Pressure: 250 psig

Issue Date: 03/12/2008 Revision Date: 03/25/2008

Approved by Joseph P. McMahon on 03/26/2008

CalgonCarbon	PRESSURE INDICATING GAGES MATERIAL SPECIFICATION	SPEC NO:
	PI-213 TO PI-218; PI-448 TO PI-560	IS008

SAP PART NUMBER:

CCC DRAWING NUMBER:

MATERIAL: As listed below:

Case:	4-1/2" size, stainless steel, steel, brass, aluminum and phenol.
Socket:	1/2" NPT male bottom connection, stainless steel.
Dial:	White litho with black figures.
Pointer:	Balanced micrometer.
Bourdon Tube:	Stainless steel.
Movement:	Stainless steel and Delrin.
Accuracy:	1% of full range.
Liquid Fill:	None

RATING: Temperature range of -4 DEG. F. to +150 DEG. F.

MANUFACTURER: Ashcroft, WIKA

MODELS: Ashcroft "Duragauge" - 1279, WIKA 232.34

NOTES: As listed below:

1. Spec. IS008 replaces Spec. No. 7209A-CS263
2. This specification replaces the Specs. listed below.

RANGE: As listed below:

ITEM NO.	SCALE RANGE	REPLACES THESE ITEMS	
PI-213	0-15 PSIG	PI-101,7	SPEC. No. 7209A-CS161,2 (IS001,2)
PI-214	0-30 PSIG	PI-102,8	SPEC. No. 7209A-CS161,2 (IS001,2)
PI-215	0-60 PSIG	PI-103,9	SPEC. No. 7209A-CS161,2 (IS001,2)
PI-216	0-100 PSIG	PI-104,10	SPEC. No. 7209A-CS161,2 (IS001,2)
PI-217	0-160 PSIG	PI-105,11	SPEC. No. 7209A-CS161,2 (IS001,2)
PI-218	0-200 PSIG	PI-106,12	SPEC. No. 7209A-CS161,2 (IS001,2)
PI-448	0-300 PSIG		
PI-557	0-300 PSIG *		
PI-449	0-400 PSIG		
PI-556	0-400 PSIG *		
PI-450	0-800 PSIG		
PI-558	0-800 PSIG *		
PI-559	0-1500 PSIG		
PI-560	0-1500 PSIG *		*With Steam Coil Siphon

GENERAL REQUIREMENTS:

Tag each assembly with Item No. and Service.

Issue Date: 01/01/89 Revision Date: 12/16/2005

Approved by Gerald Kirner on 03/21/2006

Bourdon Tube Pressure Gauges
Solid-Front Process Gauge - SS Wetted Parts
Type 232.34 - Dry Case
Type 233.34 - Liquid-filled Case

Applications

- For applications with high dynamic pressure pulsations or vibration a liquid filled case and socket restrictor are available
- Suitable for corrosive environments and gaseous or liquid media that will not obstruct the pressure system
- Process industry: chemical/petrochemical, power stations, mining, on and offshore, environmental technology, mechanical engineering and plant construction

Special features

- Excellent load-cycle stability and shock resistance
- Solid front thermoplastic case
- Positive pressure ranges to 30,000 psi
- All lower mount connection gauges are factory prepared for liquid filling

(LBM: must install membrane prior to field filling)

Bourdon Tube Pressure Gauge Model 232.34

Standard Features

Design
ASME B40.100

Sizes
4½" & 6" (115 & 160 mm) dial size

Accuracy class
± 0.5% of span (ASME B40.100 Grade 2A)
± 1.0% of span (ASME B40.100 Grade 1A)
(for 20,000 psi range and above)

Ranges
Vacuum / Compound to 200 psi
Pressure from 15 psi to 30,000 psi
or other equivalent units of pressure or vacuum

Working pressure

Steady:	full scale value
Fluctuating:	0.9 x full scale value
Short time:	1.5 x full scale value

Operating temperature
Ambient: -40°F to +150°F (-40°C to +66°C) - dry
-4°F to +150°F (-20°C to +66°C) - glycerine filled
-40°F to +150°F (-40°C to +66°C) - silicone filled
Medium: max. +212°F (+100°C) (See Note 1 on reverse)

Temperature error
Additional error when temperature changes from reference temperature of 68°F (20°C) ±0.4% for every 18°F (10°C) rising or falling. Percentage of span.

Weather protection
Weather resistant (NEMA 3 / IP54) - without membrane
Weather tight (NEMA 4X / IP65) - dry case or filled case with membrane installed

Pressure connection
Material: 316L stainless steel
Lower mount (LM) or lower back mount (LBM)
1/4" or 1/2" NPT with M4 internal tap

Restrictor
Material: Stainless steel (0.6 mm)

Bourdon tube
Material: 316L stainless steel
≤ 1,000 PSI: C-type
≥ 1,500 PSI: helical type

Movement
Stainless steel. Internal stop pin at 1.3 x full scale
Overload and underload stops - standard
Dampened movement - optional

Dial
White aluminum with black lettering, stop pin at 6 o'clock

Pointer
Black aluminum, adjustable

Case
Black fiberglass-reinforced thermoplastic (POCAN)
Solid front, blowout back
Turret-style case with built in rear flange lugs

WIKA
Part of your business

Window
Clear acrylic with Buna-N gasket

~~Case filling~~
~~Glycerine 99.7% - Type 233.34~~

Cycle testing
400,000 - 2,000,000* cycles, depending upon pressure range

* Liquid filled

Note 1: The maximum continuous media temperature for this gauge is 212°F. However, higher temperatures can be maintained safely for short term exposure per table to the right. The user should consider temperature error and gauge component degradation when exposing gauge to any media or ambient temperature above 212°F. For continuous use in either ambient or media temperatures above 212°F, a diaphragm seal or other heat dissipating means is recommended. Consult factory for technical inquiries and application assistance.

~~Optional extras~~

- ~~Silicone dampened movement~~
- ~~Panel mounting adaptor kit (field assembled)~~
- ~~Silicone case filling~~
- ~~Halocarbon case filling~~
- ~~Cleaned for oxygen service~~
- ~~Instrument glass or safety glass window~~
- ~~Drag pointer (maximum reading indicator)~~
- ~~Alarm contacts switches (magnetic or inductive)~~
- ~~Special process connections~~
- ~~Custom dial layout~~
- ~~External zero adjustment~~

Short term, intermittent maximum media temperature limits
(Optional glass window required for all these temperatures)

500°F (260 °C) -	Dry Gauge
250°F (130°C) -	Liquid filled gauge
300°F (150°C) -	Dampened movement gauge

Dimensions

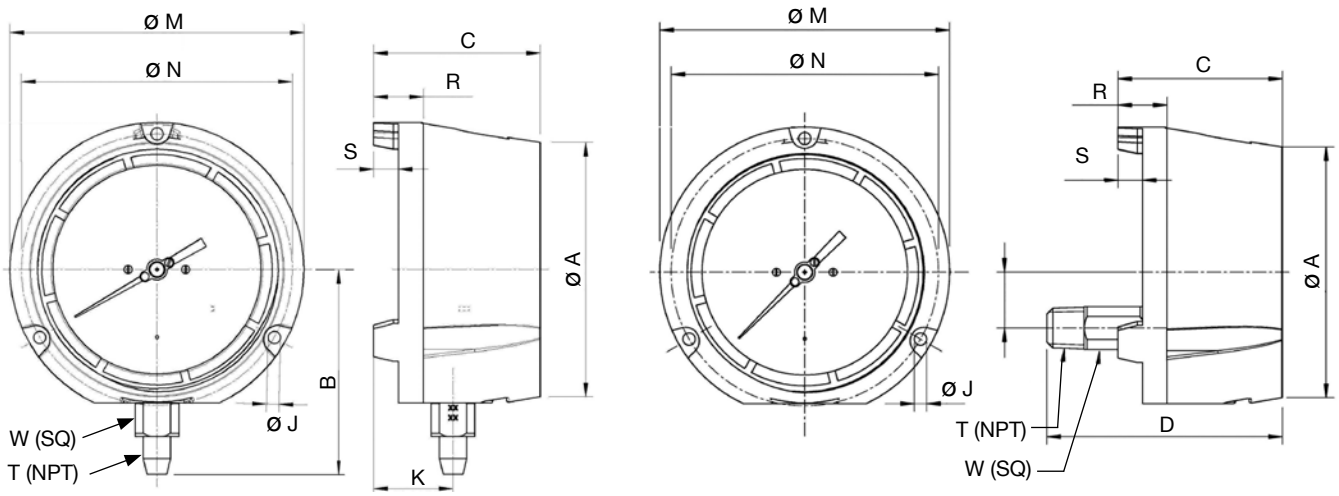

Size		A	B	C	D	J	K	L	M	N	R	S	T	W	Weight[1]	
4.5”	mm	128	103	84	120.3	6.3	40	28.5	148	136.5	25	12.5		22	2 lb.	dry
	in	5	4.06	3.31	4.74	0.248	1.57	1.12	5.83	5.37	0.99	0.49	1/2”	0.87	3 lb.	filled
6”	mm	164	122.5	88	123.4	7.1	40.2	28.5	190	177.8	25.4	12.7		22	3 lb.	dry
	in	6.46	4.82	3.46	4.86	0.28	1.58	1.12	7.5	7	1	0.5	1/2”	0.87	4 lb.	filled

[1] Weight without optional accessories

Ordering information
Pressure gauge model / Nominal size / Scale range / Size of connection / Optional extras required
Specifications and dimensions given in this leaflet represent the state of engineering at the time of printing.
Modifications may take place and materials specified may be replaced by others without prior notice.

WIKA Instrument Corporation
1000 Wiegand Boulevard
Lawrenceville, GA 30043
Tel (770) 513-8200 Toll-free 1-888-WIKA-USA
Fax (770) 338-5118
E-Mail info@wika.com
www.wika.com

CalgonCarbon	RUPTURE DISKS MATERIAL SPECIFICATION	SPEC NO:
	PSE-155 TO PSE-157;PSE-252;PSE-301 TO PSE-306;PSE-577;PSE-580	IS015

SAP PART NUMBER:

CCC DRAWING NUMBER:

MATERIAL: Impervious graphite.

Type: Standard.
Vacuum Support: Furnish for disks with bursting pressure of 15 psig or less.

FLANGES: 150 # ANSI RF or FF companion flanges (furnished by others)

MANUFACTURER: Zook, BS&B or equal.

SIZES: As listed below:

ITEM NO.	SIZE	BURSTING PRESSURE
PSE-155	1"	75 PSIG +/- 5%
PSE-156	1-1/2"	75 PSIG +/- 5%
PSE-157	2"	75 PSIG +/- 5%
PSE-170	2"	125 PSIG +/- 5%
PSE-252	3"	75 PSIG +/- 5%
PSE-301	3"	35 PSIG +/- 5%
PSE-302	3"	50 PSIG +/- 5%
PSE-303	3"	65 PSIG +/- 5%
PSE-304	3"	87 PSIG +/- 5%
PSE-305	3"	150 PSIG +/- 5%
PSE-306	3"	75 PSIG +/- 5%
PSE-307	3"	100 PSIG +/- 5%
PSE-577	3"	125 PSIG +/- 5%
PSE-580	4"	125 PSIG +/- 5%

MODELS: Zook - Mono Type Disk, BS&B - Monobloc Model MB or equal

SPECIFICATIONS: ASME UD stamp required.

NOTES: As listed below:

1 - Tag with Item No. and Service.
2 - IS015 replaces Spec. No. 7209a-CS172

SERVICE CONDITIONS:
As listed below:

Fluid Under Disks:	Water
Pressure Fluctuation:	Back Pressure:
Temperature:	40 to 150 degrees F.
Operating Pressure:	80% of bursting pressure.
Back Pressure:	Atmospheric.

GENERAL REQUIREMENTS:
As listed Below:

Bursting Pressure:	See table above
Coincident Temperature:	150 degrees F.
Relieving Capacity:	In accordance with ASME

Issue Date: 04/06/90 Revision Date: 08/15/2012

Approved by Joseph P. McMahon on 08/15/2012

CCC SPEC. IS015
PSE-577

Bulletin no. 6000-3

ZOOK®

Graphite Rupture Disks

ASME CERTIFIED

ISO 9001

ZOOK Enterprises, LLC
16809 Park Circle Drive
Box 419
Chagrin Falls, OH 44022 U.S.A.

Local **440.543.1010**
U.S.A. Toll Free **800.543.1043**
Fax **440.543.4930**
E-Mail **zook@zook.cc**
www.zook.cc

ZOOK Rupture Disks provide many exclusive performance and service benefits. Information contained in this bulletin **should not** be applied to other rupture disks including impervious graphite designs of similar appearance.

ZOOK® Graphite Rupture Disks…

protect equipment and personnel from the effects of overpressurization in static and dynamic pressurized systems. The disk is designed to rupture at a predetermined burst rating when installed in a piping system.

Each disk is made from a single piece of graphite, a high-purity form of carbon, which is impregnated with phenolic resin. The resulting material, called impervious graphite, is impermeable and is resistant to most corrosives.

Easy to install and maintain, disks:

- are tamperproof
- have no springs or moving parts
- mount directly between standard flanges without special holders.

Options and accessories increase the flexibility of standard disks. TFE coated disks offer stick-resistant surfaces. Special gaskets and stainless steel armor are also available. Spacer rings let you replace metal rupture disks without requiring piping modification. For unique applications, our engineering department will work with you to create a custom-designed disk.

ZOOK is the first and largest company in the world committed to manufacturing QUALITY impervious graphite rupture disks, through product innovations and superior service. ZOOK is the first graphite rupture disk manufacturer to earn the ASME Code UD symbol stamp and certificate of authorization. Also, ZOOK's quality management system is certified to ISO 9001 and TÜV standards.

In addition:

- ZOOK offers 1-day shipment of disks with over 100 rating and diameter combinations. Service personnel are also available 24 hours-a-day, 7 days-a-week, 365 days-a-year to handle your emergency shut-down needs
- produces a standard line of graphite disks as small as 1/2" diameter and disks with burst ratings as low as 0.25 psig
- tests disk performance at cryogenic and elevated temperatures

Applications

ZOOK Disks enhance *SAFETY* in chemical, petrochemical, pharmaceutical, food, medical, and related processing systems around the world. Other applications include: storage tanks, tank trailers, rail cars, barges, pressured switchgear, and air conditioning compressors.

ZOOK Disks also increase *system efficiency* by:

- eliminating back pressure effects on overpressure devices in common vent lines
- solving sourcing and cost problems for disks used with highly corrosive fluids
- offering ultra low rated pressure settings
- preventing relief valves from fouling and leaking

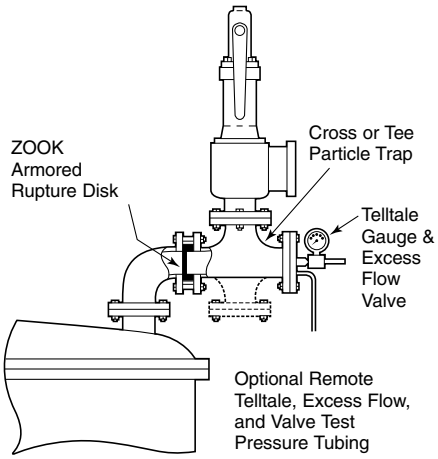

Installation

ZOOK Graphite Rupture Disks fit directly between standard flanges without the need for additional holders.

A flow arrow on each disk indicates proper orientation.

Armor provides additional protection from extraneous stress to the disk resulting from misaligned piping. Armor is standard on selected diameter and burst ratings and is required in fire case and toxic services. See ARMOR, page 7, for more information.

Gaskets should be ring type, non-metallic, relatively soft, and properly sized. See GASKETS, page 8, for more information.

Normal good practice should be followed when making flange connections. Particular attention should be paid to ensure:

- concentric alignment of the disk and gaskets
- uniform cross-tightening of flange bolts
- adequate support of piping to withstand external loading and thrust during blowdown
- protection of personnel and equipment against high velocity open discharge of process material and rupture disk particles

METAL Rupture Disk Installation

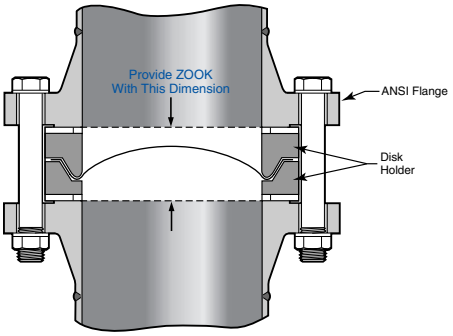

Graphite Rupture Disk Replacement

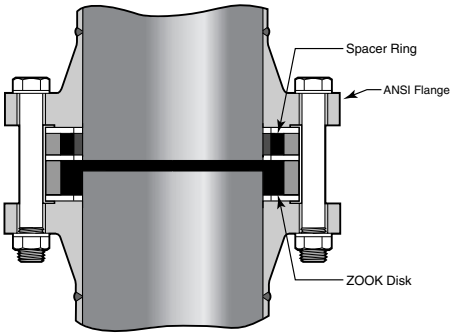

When replacing a metal rupture disk with a ZOOK Graphite Rupture Disk, a graphite lined armored spacer ring can be provided to fill the space of existing flange face-to-face distance, eliminating the need for piping modifications.

Detailed installation instructions are provided with each disk.

MONO Type Disks

the best choice for low and intermediate burst ratings

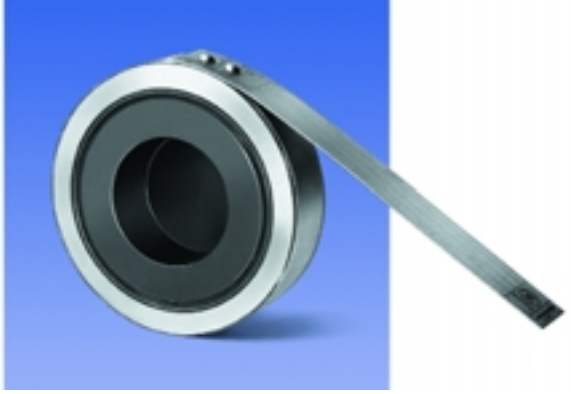

- Sizes 1/2″ thru 24″ diameters
- Designed to fit ANSI Class 150 flanges (Higher ratings to fit Class 300 flanges are furnished in the INVERTED and DUPLEX Type Disks)
- Burst ratings 0.25 to 150 psig
- 0% manufacturing range
- Operating pressures to 90% of the disk's marked burst pressure (Consult ZOOK for operating ratio for burst pressures below 15 psig)
- Temperature ratings –290°F to +700°F (–179°C to +371°C). Maximum temperature rating without insulation is 430°F (221°C) or 700°F (371°C) with insulation. Consult ZOOK for higher temperature ratings. The specified temperature shall be at the disk location at the time when the disk is expected to rupture
- Counterbored side of the disk contacts the process media
- Vacuum supports are available for ratings below 25 psig
- May be configured to withstand high back pressure generated in closed piping systems – request Bak-Pressure™ bulletin
- Stocked MONO Disks, ready for immediate shipment

  Sizes: 1″, 1-1/2″, 2″, 3″, 4″, 6″, 8″ to fit ANSI Class 150 flanges

  Burst Ratings: 10, 15, 20, 25, 30, 40, 50, 75, 100, 125, 150 psig @ 72°F (22°C)

Note: Sizes 6″ and 8″ with burst ratings 125 and 150 psig @ 72°F (22°C) are stocked in INVERTED type

- ASME UD stamping available

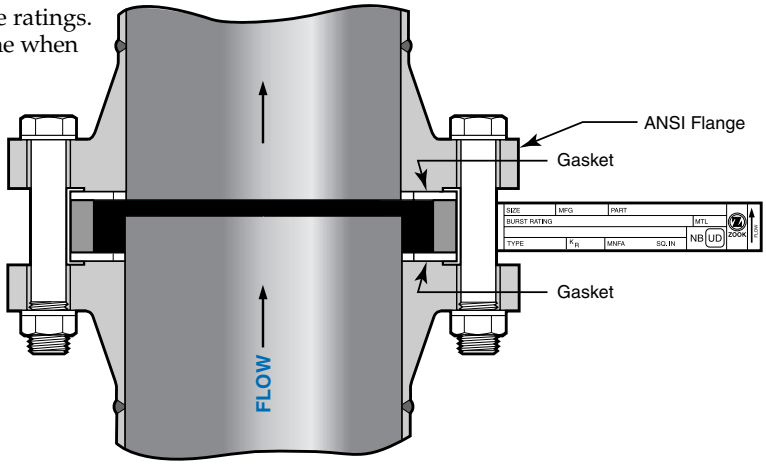

Certified Flow Resistance Factor (K_r)

Support Style	K_r
MONO – no support	0.26
MONO – with bar	2.40
MONO – with cross	5.40
MONO – with ring	6.44
MONO – with plate	15.70

Required Vacuum Support Style for Full Vacuum Service

Size	Burst Rating	Support Style
1″	below 25 psig	MONO – with ring
1-1/2″	below 25 psig	MONO – with bar
2″ - 14″	9 to 25 psig	MONO – with bar
2″ - 14″	5 to below 9 psig	MONO – with cross
2″ - 14″	below 5 psig	MONO – with plate

Specifications – ANSI Class 150

Disk Sizes	Minimum net flow area (MNFA) Sq. inches					Disk Dimensions				Burst Ratings psig	
	Full Bore	Vacuum support style				Diameter		Thickness*			
		Ring	Bar	Cross	Plate	I.D.	O.D.	Standard Disk	Insulated Unit	Min.	Max.
1/2″	0.19	N/A	N/A	N/A	N/A	1/2″	1-3/4″	5/8″	1-3/4″	25	150
3/4″	0.44	N/A	N/A	N/A	N/A	3/4″	2-1/8″	5/8″	1-3/4″	25	150
1″	0.78	0.44	0.60	0.47	0.32	1″	2-1/2″	7/8″	2-1/4″	10	150
1-1/2″	1.76	N/A	1.34	1.05	0.72	1-1/2″	3-1/4″	7/8″	2-1/4″	7	150
2″	3.14	N/A	2.39	1.86	1.30	2″	4″	7/8″	2-1/4″	3	150
3″	7.06	N/A	5.56	4.31	2.95	3″	5-1/4″	7/8″	2-1/4″	2	150
4″	12.56	N/A	10.56	8.81	5.47	4″	6-3/4″	7/8″	2-1/4″	1.5	150
6″	28.27	N/A	22.27	17.27	12.05	6″	8-5/8″	7/8″	2-1/4″	1	100
8″	50.26	N/A	40.26	31.82	21.14	8″	10-7/8″	1-1/8″	2-3/4″	0.50	100
10″	78.53	N/A	63.53	50.78	32.66	10″	13-1/4″	1-1/2″	3-3/8″	0.25	100
12″	113.09	N/A	89.09	69.09	47.24	12″	16″	2″	4-3/8″	0.25	75
14″	137.88	N/A	108.06	83.31	58.07	13-1/4″	17-5/8″	2-1/4″	4-7/8″	0.25	50
16″	182.65	N/A	144.52	112.65	84.49	15-1/4″	20-1/8″	2-1/2″	5-3/8″	0.25	50
18″	233.70	N/A	181.95	153.70	104.31	17-1/4″	21-1/2″	2-3/4″	5-7/8″	0.25	50
20″	291.03	N/A	233.28	184.53	122.49	19-1/4″	23-3/4″	3″	6-3/8″	0.25	40
24″	424.55	N/A	354.80	294.05	190.61	23-1/4″	28-1/8″	3″	6-3/8″	0.25	25

*Standard disk thickness does not include gaskets.
Insulated unit thickness includes all gaskets

Note: Maximum pressure rating of ANSI Class 150 flanges is 290 psig @ 100°F (38°C). The maximum pressure rating is lower at higher temperatures. Reference ASME/ANSI B16.5

Technical Data

Testing Method

Standard disks are rated at the specified burst pressure without applying a Manufacturing Design Range (MDR) by bursting two or more disks to establish burst accuracy. Where higher than room temperature (+40°F to +100°F) service is specified, oven tests can be conducted, or disks can be room temperature tested with compensation made using a temperature curve developed specifically for our disks. (These disks are designated *Chart Compensated Disks.*)
ASME disks are tested at the specified coincident temperature.

ASME Code and Jurisdictional Regulations

Most jurisdictions require ASME Code compliance on Boiler and Pressure Vessel construction. All pressure vessels within the scope of the ASME Code Section VIII, Div. 1 shall be provided with pressure relief devices. It is the responsibility of the ***user*** to ensure that the required devices are properly installed prior to initial operation of the pressure vessels.

If company policy or jurisdictional regulation requires ASME Code compliance, the rupture disk devices used for pressure vessel overpressure protection shall bear the ASME Code UD symbol. The UD marking is the manufacturer's declaration that the device was manufactured in full compliance with the ASME Code.

Disks specified to ASME Code requirements are rated using a 0% MDR unless a special MDR is specified and agreed upon. 0% MDR disks are marked with the specified burst rating. Refer to the certified type for the flow resistance factors (K_r) and the Minimum Net Flow Area (MNFA).

Pressure Ratings and Burst Tolerances

Burst ratings range from 0.25 psig to above 1000 psig for sizes 1/2″ thru 24″. Refer to minimum and maximum values in tables provided for each disk. Standard burst tolerances are:

Pressure Rating psig @ 72°F (22°C)	Burst Tolerance
Above 40	±5%
15 to 40	±2.0 psi
5 to less than 15	±1.0 psi
Above 1 to less than 5	±0.75 psi
1 or less	+0.75 psi /−0

Consult ZOOK for tighter burst tolerance

Corrosion Resistance

Depending on the type and options, disks handle almost any corrosive except free fluorine. See CORROSION Guide, page 8.

Vacuum

Disks are self-supporting up to full vacuum at burst ratings of 25 psig and higher. At lower pressures, integral vacuum supports are available only for MONO Disks. External vacuum supports are available for DUPLEX Disks. Consult ZOOK for partial vacuum services.

Dimensional Standards

Standard disks fit directly between ANSI Class 150 or 300 flanges with flat or raised faces. Flat ring gaskets are required and can be attached to the disk before shipment. Consult ZOOK for flange requirements other than ANSI.

Capacity and Flow Resistance

Full bore opening at time of rupture is a consistent characteristic of ZOOK Disks and results in very low flow resistance values (K_r). Refer to K_r values in tables provided for each disk type.

Service Life

Indefinite service life is normal in static systems. Replacement is unnecessary at operating-pressure to burst-rating ratios to 90%. In cycling service, this ratio should be lowered.

Burst Sensors

For remote and quick detection of a ruptured condition, ZOOK offers the ZENSOR™: Rupture disk and sensing element are integral parts of the electrical circuit to eliminate false readings. Model BA: An external re-usable and replaceable indicator. Specify Model BA-L for optional leak detection.

Armor

Armor is available on any standard style, size and rating of graphite rupture disk. Standard material is Carbon Steel (316SS optional). Armor is required on the following:

- Disks for ANSI Class 300 flanges
- TWO-WAY Type Disks
- Disks rated for temperatures above 338°F (170°C), regardless of disk style or flange class
- Disks for ANSI Class 150 flanges. See table at right with the following sizes and burst ratings:

Sizes	Rated Over psig @ 72°F (22°C)
1/2″ - 3″	150
4″	100
6″ - 10″	75
12″ - 24″	50

Where fire or blowdown temperatures exceeding 338°F (170°C) are design considerations, armor is required. Armored disks typically withstand the same conditions, i.e. blowdown temperatures, as the piping.

Disks not covered above are furnished unarmored unless armor is specifically ordered. Armor is highly recommended for:

- added safety
- greater reliability
- easier installation

WARNING

If a disk ruptures, material may:

- vent at high velocity with significant reaction thrust force
- contain disk particles and other solids and liquids
- be toxic or flammable.

The end user must make provisions to prevent personal injury and equipment damage. Use of disks described in this bulletin are intended for use only by persons with requisite technical skill and at their own discretion and risk. Because application, installation, and use are beyond our control, we make no warranties expressed or implied and do not assume any liability exceeding purchase price of the disk.

It is the responsibility of the end user to fully understand his process and determine the disk needed to properly protect the system.

Gaskets

Gaskets used with graphite disks are stocked in the following materials: Neoprene, Non-asbestos, solid PTFE, and PTFE envelope. Gaskets can be supplied loose or attached to the disk (Note: field installation of gaskets NOT recommended on TWO-WAY Disks or Insulted Units)

When supplying your own gaskets, follow dimensions in the chart, especially the inside diameter which provides proper clearance to ensure accurate burst. 1/8″ thick gasket is recommended. Gaskets for INSULATED Disks are made from high-temperature material and are always supplied attached.

Gasket Dimensions

Disk Size	Flanges			
	ANSI Class 150		ANSI Class 300	
	I.D.	O.D.	I.D.	O.D.
1/2″	3/4″	1-3/4″	3/4″	2″
3/4″	1″	2-1/8″	1″	2-1/2″
1″	1-5/16″	2-1/2″	1-5/16″	2-3/4″
1-1/2″	1-29/32″	3-1/4″	1-29/32″	3-5/8″
2″	2-1/2″	4″	2-1/2″	4-1/4″
3″	3-3/4″	5-1/4″	3-3/4″	5-3/4″
4″	5″	6-3/4″	4-3/4″	7″
6″	7-1/8″	8-5/8″	7-1/8″	9-3/4″
8″	8-7/8″	10-7/8″	9″	12″
10″	11-5/8″	13-1/4″	N/A	N/A
12″	13-3/4″	16″	N/A	N/A
14″	14-1/2″	17-5/8″	N/A	N/A
16″	17″	20-1/8″	N/A	N/A
18″	19-1/2″	21-1/2″	N/A	N/A
20″	21-3/4″	23-3/4″	N/A	N/A
24″	25″	28-1/8″	N/A	N/A

Corrosion Guide

Refer to the chart to determine which disk is best suited for your system fluid. Corrosives not shown can typically be accommodated by our unlined Graphite Disks. If in doubt, use the DUPLEX Disk or contact ZOOK to obtain a material sample for testing.

INSULATED Disks cannot be used with liquids, hydrofluoric and phosphoric acids or concentrated alkalis.

	MONO and INVERTED Disks	DUPLEX Disks*
Aluminum Hydroxide	No	Yes
Ammonium Hydroxide	No	Yes
Bromine (free)*	No	Yes
Calcium Chlorate	No	Yes
Calcium Hydroxide	No	Yes
Calcium Hypochlorite	No	Yes
Chloral	No	Yes
Chlorine (free)	No	Yes
Chromic Acid (plating)	No	Yes
Fluorine (free)	No	No
Hydrofluoric Acid	No	Yes
Iodine (free)	No	Yes
Molten Metal Alkalis	Yes	Yes
Nitric Acid	No	Yes
Oleum	No	Yes
Ozone	No	Yes
Potassium Chlorate	No	Yes
Potassium Hydroxide	No	Yes
Potassium Hypochlorite	No	Yes
Sodium Chlorate	No	Yes
Sodium Hydroxide	No	Yes
Sodium Hypochlorite	No	Yes
Sulfur Trioxide	No	Yes
Sulfuric Acid	No	Yes

*Upon request we will furnish liners in Kynar, FEP, PFA, or PTFE

Other Rupture Disks

Metal Rupture Disks and Disk Holders...

- Forward and Reverse-Acting Designs
- Full range of burst ratings and materials
- Non-fragmenting designs available
- Available with insert holders for bubbletight, metal-to-metal sealing

Sanitary Rupture Disks...

protect sanitary piping systems

- Metal or Graphite materials
- Ideal for food, pharmaceutical, medical, biotech other high purity systems
- Full range of burst ratings
- Comply with FDA requirements
- Full size range available
- No special holders or fittings required

Rail Car Rupture Disks...

can be used for a full year without change-out (regardless of number of trips)

- 60, 100, 135 or 165 psig burst ratings
- Meets or exceeds AAR A5.03 and A5.04 specifications
- Steel armored for added safety and greater reliability

Bak-Pressure™ Disks...

guard against excess pressure in common piping systems

- Burst ratings from 0.25 to over 1000 psig
- Sizes from 1/2″ thru 24″

Transportation Rupture Disks...

protect over-the-road tank trailers and intermodal tanks

- Sizes from 2″ thru 4″
- Metal or graphite materials available
- Stocked burst ratings: 30, 35, 40, 45, and 50 psig in graphite disks
- Last up to one year without change-out

For more information on any ZOOK Graphite Rupture Disks or to place an order contact:

ZOOK Enterprises, LLC
16809 Park Circle Drive
Box 419
Chagrin Falls, OH 44022

Local **440.543.1010**
U.S.A. Toll Free **800.543.1043**
Fax **440.543.4930**
E-Mail **zook@zook.cc**
www.zook.cc

CalgonCarbon	LINED PIPE MATERIAL SPECIFICATION	SPEC NO:
	PLASTIC LINED STEEL PIPE WITH PLASTIC LINED FLANGED FITTINGS	L01

SAP PART NUMBER:

CCC DRAWING NUMBER:

MATERIAL: Plastic lined steel pipe with plastic lined flanged fittings.

RATING: 150 PSIG @ minus 20 DEG. to plus 225 DEG. F.

CONSTRUCTION: Flanged 1" to 8", Crane Resistoflex brand piping system using polypropylene resin lined steel pipe and lined cast iron flanged fittings. Each spool piece and fitting to be furnished with ends of plastic liner formed over flanged ends to form a molded raised face.

PIPE: Schedule 40, ANSI B36.10, ASTM A53, steel pipe with lining.

FITTINGS: 125 lb., ANSI B16.1, ASTM A126, Class A, cast iron flanged with lining.

FLANGES: 125 lb., ANSI B16.1, ASTM A126, Class A, cast iron, threaded, flat face with smooth finish, drilled and chamfered.

BOLTING: See attached Fastener Specification F03.

FIELD FABRICATION: For piping not shop fabricated Contractor must have special tools and equipment to cut the lined pipe and form the molded raised face on the job. See Crane Resistoflex Design Manual for necessary equipment and instructions.

LINING: Thermally stabilized polypropylene resin.

Issue Date: 08/04/2009 Revision Date: 08/04/2009

Approved by Joseph P. McMahon on 08/13/2009

CalgonCarbon	STAINLESS STEEL PIPE MATERIAL SPECIFICATION	SPEC NO:
	INSTRUMENT PIPING, HEAT TRACING, ETC.	S06

SAP PART NUMBER:

CCC DRAWING NUMBER:

MATERIAL: Stainless steel tubing and flareless compression fittings, and stainless steel pipe and fittings.

RATING: 150 PSIG @ 365 DEG. F.
300 PSIG @ 100 DEG. F.

CONSTRUCTION: For tubing systems 1" and smaller. Pipe and screwed pipe fittings to be used for take-off connections on larger pipe, manifolding, connections to screwed instruments, equipment, etc. Tubing to be used for all other piping in the system.

PIPE NIPPLES: ASTM A312, Type 316, seamless, Schedule 80S, ANSI B36.19, annealed and pickled.

PIPE FITTINGS: Type 316 stainless steel screwed fittings, dimensions per ANSI B16.3, forged, wrought or cast material rated 150 lb. Camco Fittings Co., or equal.

TUBING: Type 316 stainless steel seamless tubing, 0.035" wall thickness, annealed and pickled, hardness 70-74 Rockwell "B", 1/4 O.D.

TUBE FITTINGS: Type 316 stainless steel, flareless compression fittings, Crawford Fitting Company "Swagelok", or equal.

Issue Date: 01/01/89 Revision Date:

Approved by Joseph P. McMahon on 07/24/98

CalgonCarbon	STAINLESS STEEL PIPE MATERIAL SPECIFICATION	SPEC NO:
	TYPE 316 STAINLESS STEEL PIPE AND FITTINGS	S15

SAP PART NUMBER:

CCC DRAWING NUMBER:

MATERIAL: Type 316 stainless steel pipe and fittings.

RATING: 150 PSIG @ 365 DEG. F.
300 PSIG @ 100 DEG.F.

CONSTRUCTION: Screwed for 3" and smaller

PIPE: Threaded, Schedule 40S, ASTM A312, Type316, welded, ANSI B36.19, annealed and pickled.

FITTINGS: Type 316 stainless steel screwed fittings, general dimensions to conform to ANSI B16.3 for malleable iron screwed fittings. Forged, wrought or cast material rated 150 Lb. @ 365 DEG.F., Camco Fittings Co., or equal.

FLANGES: Type 316 stainless steel, threaded, MSS-SP-51, 150 Lb. flat face, serrated finish.

ORIFICE FLANGES: Instrument Item.

BOLTING: See attached Fastener Specification F03.

GASKETS: See attached Gasket Specification G02.

Issue Date: 12/01/89 Revision Date: 06/20/2001

Approved by Gerald Kirner on 06/21/2001

SECTION 10

SHIPPING SPECIFICATION

SPECIFICATION NUMBER: VS-13

SHIPPING OF STANDARD METAL ADSORBER SYSTEMS

1.0 INTRODUCTION

1.1 The following Calgon Carbon Corporation shipping, and handling instructions are designed to protect the mechanical integrity and the surface finish of the adsorber vessels and/or piping comprising an adsorption system. Proper handling procedures are required to ensure against damage to the new equipment.

1.2 The shipping and handling instructions outlined here are only recommendations and do not relieve any party from full responsibility for proper inspection, handling, shipping preparation, transporting, or unloading of the equipment. Also, the purchaser should be aware that failure to take the precautions outlined here may invalidate the equipment warranty.

2.0 GENERAL HANDLING AND LIFTING INSTRUCTIONS

2.1 Calgon Carbon Corporation equipment is designed with specific locations for lifting and will withstand normal handling procedures. The lifting lugs, shown on the general arrangement installation drawing, are generally located on top of the vessel. Fork tubes are located near the bottom of the equipment.

Refer to the project drawings is required before handling the equipment.

2.2 Normal precautions to follow to prevent equipment damage are as follows:

2.2.1 Operators of hoist equipment must follow proper safety and rigging procedures at all times.

2.2.2 Always lift -- ***NEVER*** roll or slide the vessels or piping.

2.2.3 When moving equipment, do not drop or allow hard impact. Do not allow cables, hooks, or spanner bars to swing against the vessel.

2.2.4 Never allow tools to strike or drop on equipment (especially inside or outside of vessels).

2.2.5 All ladders used inside vessels should have ends protected. They should be wood construction; if not, ladders must have rubber protectors to prevent damaging the lining.

2.2.6 Workmen entering a lined vessel must wear soft-soled shoes, free of grit. Workmen must follow plant and OSHA requirements for confined space entry.

2.2.7 Always make lifting attachments to the lifting lugs when using chains or cables. Never lift from the nozzles.

2.2.8 Never lift a vessel by using any fitting or appurtenance other than the lift lugs. When lift lugs are not provided as part of the equipment, nylon web rigging slings must be used by attachment directly to the corners of the structural frame. It is recommended that the nylon web be protected with rubber pads or sheets to prevent cutting or tearing across the corners.

CALGON CARBON CORPORATION ♦ COPYRIGHT 2016 ♦ ALL RIGHTS RESERVED

3.0 PREPARATION FOR SHIPMENT

3.1 Calgon Carbon Corporation and their representatives are to take reasonable precautions when preparing equipment for shipment. Normally, a flat-bed truck will be used to transport the vessels, pipe rack and piping to the customer. Any hold-down location where a chain or strap contacts a painted surface must be protected with rubber sheeting, carpeting or other similar material.

3.2 Vessel loading will be the responsibility of the fabrication shop. Securing the load on the truck will be the responsibility of the truck driver. Painted surfaces must be protected from damage.

3.3 The pipe rack loading, if supplied, is the responsibility of the fabrication shop. The truck driver is to secure the rack to the truck bed. Points of contact are to be padded to protect the equipment.

3.4 All loose piping is to be loaded in such a manner as to avoid damage to painted surfaces. No chains are to be in direct contact with piping. Padding is to be used. Loading of loose piping will be the responsibility of the fabrication shop. The truck driver is to secure the piping to the truck bed.

4.0 SHIPPING REQUIREMENTS

4.1 Systems are typically shipped on one (1) truck. An additional truck may be required due to specific height or weight restrictions.

4.2 Once the vessels, pipe racks or loose piping are loaded onto a truck, they shall not be unloaded again until they reach their final destination.

4.3 No vessels, pipe racks or loose piping shall be shipped without a complete bill of lading which itemizes all parts. Also, no shipment shall be made without the completed packing list for crated parts which has been initialed by the person who packed and the person doing the checking.

5.0 INSPECTION UPON RECEIPT

5.1 The purchaser should arrange for an inspector or an authorized person at the jobsite to inspect and also supervise the off-loading of the system.

5.2 Check the bill of lading against the equipment received.

5.3 If damage has occurred during transit, it must be noted on the delivery receipt prior to signing acceptance. If damage has occurred, a claim should be filed promptly with the delivery carrier. If excessive damage is found:

- Do not unpack or unload the equipment
- Document the extent of the damage with photographs
- Contact your Calgon Carbon representative

5.4 If no claim is filed, the purchaser accepts all further responsibility for damaged equipment.

5.5 If damage has occurred and is not repaired by Calgon Carbon Corporation prior to the equipment being put into service, the purchaser accepts all future responsibility for the effects of equipment failure resulting from such damage.

CALGON CARBON CORPORATION ♦ COPYRIGHT 2016 ♦ ALL RIGHTS RESERVED

6.0 RECOMMENDED INSPECTION PROCEDURES

The following should be used as a guideline in making an inspection of the equipment prior to unloading.

6.1 The adsorber vessel exterior should be visually examined for damage. Any sign of impacting may result in cracked or flaking of the vessel interior lining. If this damage has occurred, it is required that the manway be opened and the interior lining be visually inspected.

6.2 Check the equipment for any signs of breakage, abrasion, shifting or rotation that may have resulted in damage to the paint on vessels, pipe rack, or loose piping.

6.3 Upon discovering minor or major damage, contact your Calgon Carbon representative to report your findings.

7.0 UNLOADING

7.1 Calgon Carbon Corporation specifically does not assume responsibility for the unloading of vessels, pipe racks or piping. Shipment will be considered complete when the equipment arrives at the jobsite and prior to removal of the equipment from the truck by the purchaser. The presence of Calgon Carbon Corporation representative(s) at the delivery or installation site does not relieve the purchaser of any of his responsibility for proper handling procedures.

7.2 All instructions shown in the Unloading/Foundations Section of the Calgon Carbon Corporation Operation and Maintenance Manual for this equipment shall be followed.

7.3 Vessel and pipe rack unloading shall be accomplished in such a manner as to avoid damage to finished surfaces. Adequate padding may be necessary around the lifting point.

7.4 The use of chains, slings, or a spreader bar is required for hoisting vessels and the pipe rack. The angle between the lifting point and the top of the equipment must always be 60° or greater. Workmen should keep control over the vessel with guidelines.

8.0 INSTALLATION

8.1 All instructions shown in Installation Section of the Calgon Carbon Corporation Operation and Maintenance Manual for this equipment shall be followed.

**** REVISIONS * ****

This specification has been revised as indicated below. The new pages added and/or the existing pages revised are attached as replacements for those previously issued.

REVISION	DATE	BY	PAGE	REMARKS
A	1-15-93	JMcM	All	Issued for Comment
B	5/19/93	JPM	All	Issued for Comment
C	9/1/93	JPM	2-3	Issued for Comment
D	10/12/93	JPM	3	Issued for Comment
E	11/13/07	JSR	All	
F	02/29/2008	RES	All	Modified to include vapor-phase equipment

ISSUED: JANUARY 15, 1993

CALGON CARBON CORPORATION ♦ COPYRIGHT 2016 ♦ ALL RIGHTS RESERVED

SECTION 11

DRAWINGS

SECTION 11

DRAWINGS

DRAWING INDEX

DRAWING NUMBER	REVISION	TITLE
91157779	0	Model 10 Carbon Adsorber System, 8" Piping, Non-Potable, Flow Diagram
91157780	0	Model 10 System, 125 PSIG, 10 ø Vessel, 8" Piping, General Arrangement; Sheets 1 & 2
91157781	1	Model 10, 125 PSIG, 10 Ft. Dia., V-214A Vessel Arrangement; Sheets 1 & 2
91157782	1	Model 10, 125 PSIG, 10 Ft. Dia., V-214B Vessel Arrangement; Sheets 1 & 2

CALGON CARBON CORPORATION ♦ COPYRIGHT 2016 ♦ ALL RIGHTS RESERVED

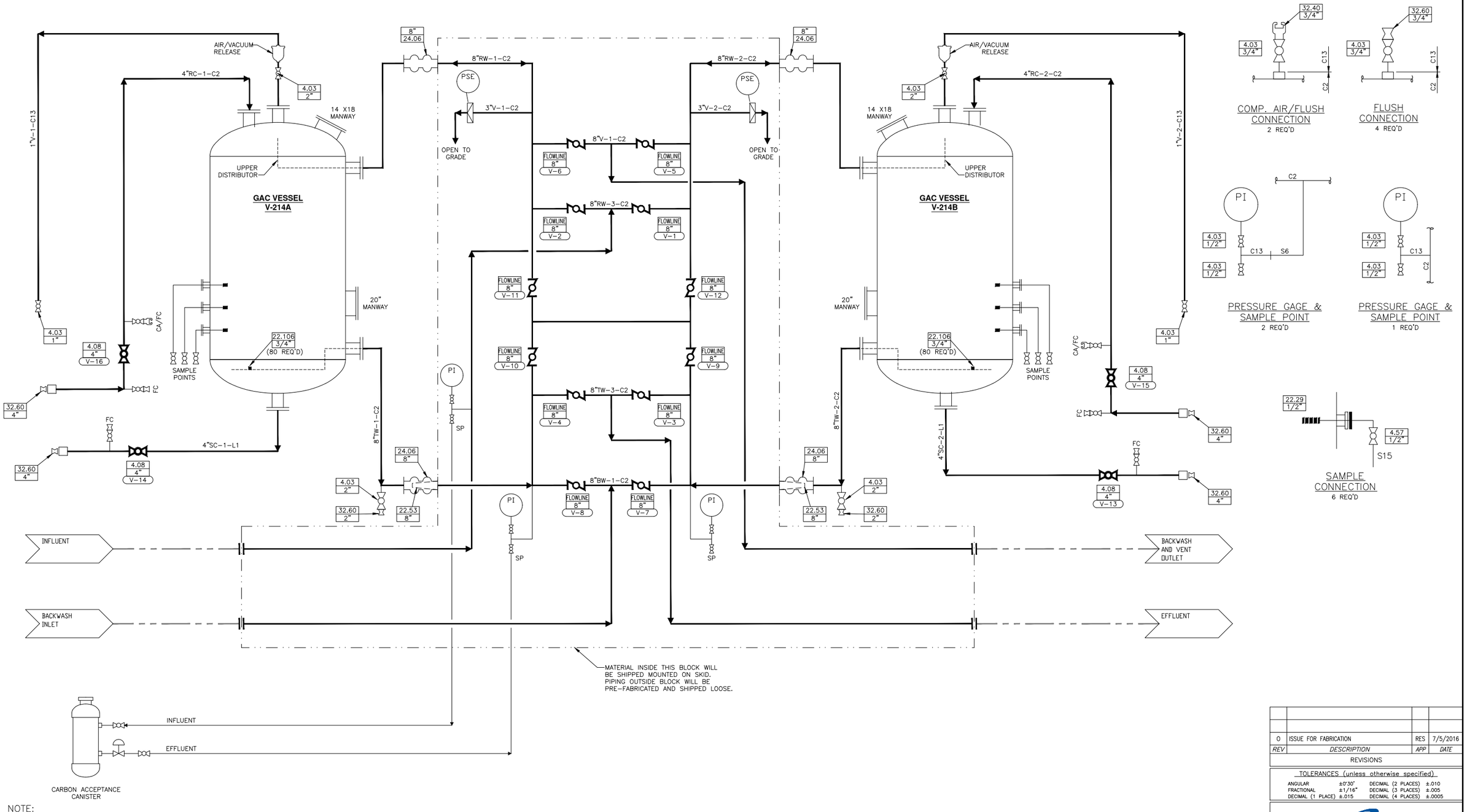

NOTE:
FOR CAC INSTALLATION, SEE O&M MANUAL.

MEDIA	INSTRUMENTATION	DESIGN CONDITIONS	LEGEND	ADSORBERS	UTILITY REQUIREMENTS
MEDIA: OLC AW 12 X 40 QUANTITY PER VESSEL: 20,000 LBS. SERVICE: NON-POTABLE	PI 217 PSE 577 FOR 100 psig MAX. OPER. PRESS. AIR/VACUUM RELEASE - CRISPIN AL SERIES PROCESS VAVLES - FLOWLINE W/ NYLON COATED DISC	FLOW RATE - 700 GPM (SERIES) 1400 GPM (PARALLEL) INFLUENT PRESSURE - 100 PSIG MAX. INFLUENT TEMP. - 120°F MAX. BACKWASH RATE - 550 GPM @ 60° F ELECTRIC POWER - 120 V, 60~ SINGLE PHASE, 15 AMP	BW - BACKWASH WATER FC - FLUSH CONNECTION RC - REACT.(OR VIRGIN) CARBON RW - RAW WATER SC - SPENT CARBON SLURRY SP - SAMPLE PORT TW - TREATED WATER V - VENT	10'-0" O.D. x 10'-0" S.S. ASME 2:1 ELLIPTICAL TOP AND BOTTOM HEADS. CARBON STEEL CONSTRUCTION. ASME SECT. VIII, DIV. 1 W/ PLASITE 4110 LINING 125 PSIG @ 140°F DESIGN.	AIR, CARBON TRANSFER - 100 SCFM @ 30 PSIG MIN. PLANT WATER - 100 GPM @ 30 PSIG MIN.

THIS DRAWING AND DESIGN IS THE PROPERTY OF CALGON CARBON CORPORATION AND IS NOT TO BE REPRODUCED IN WHOLE OR IN PART NOR EMPLOYED FOR ANY PURPOSE OTHER THAN SPECIFICALLY PERMITTED IN WRITING BY CALGON CARBON CORPORATION. THIS DRAWING LOANED SUBJECT TO RETURN ON DEMAND.

	NAME	DATE
DRAFTER	JPARRISH	12/11/2015
DESIGNER		
CHECKER	RES	7/5/2016
APPROVAL		
PROJECT No.	CTO.150010.KRTAF	

REV	DESCRIPTION	APP	DATE
0	ISSUE FOR FABRICATION	RES	7/5/2016

REVISIONS

TOLERANCES (unless otherwise specified)

ANGULAR	±0°30'	DECIMAL (2 PLACES)	±.010
FRACTIONAL	±1/16"	DECIMAL (3 PLACES)	±.005
DECIMAL (1 PLACE)	±.015	DECIMAL (4 PLACES)	±.0005

CalgonCarbon

CLIENT
KIRTLAND AFB
ALBUQUERQUE, NM

TITLE
MODEL 10 CARBON ADSORBER SYSTEM
8" PIPING, NON-POTABLE
FLOW DIAGRAM

DWG. Size	SHEET No.	SCALE
D	1 OF 1	NONE

DWG. No. 91157779 REV. 0

V:\2015\CTO.150010.KRTAF\Drawings\Process\91157779 P&ID.dwg Oct 12, 2016 - 2:11pm

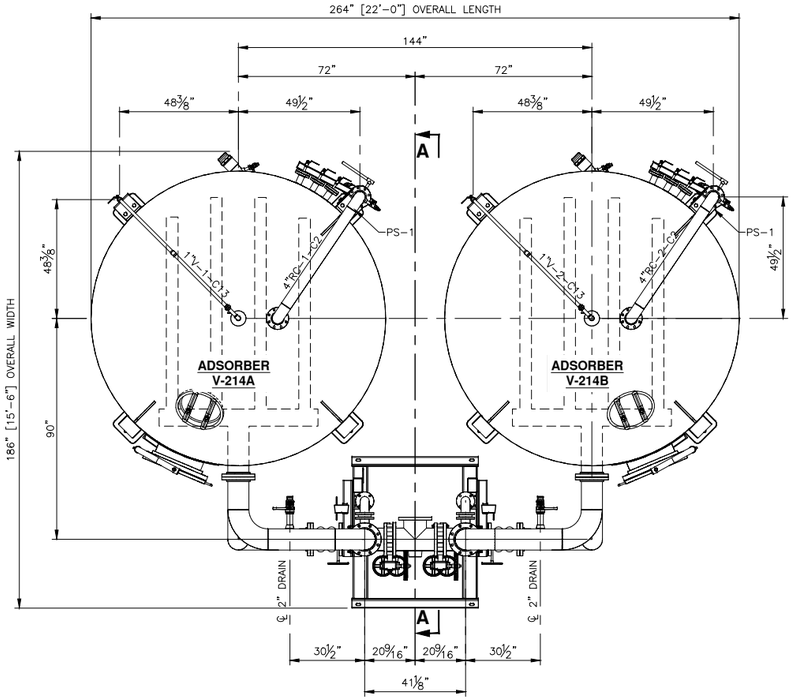

PLAN

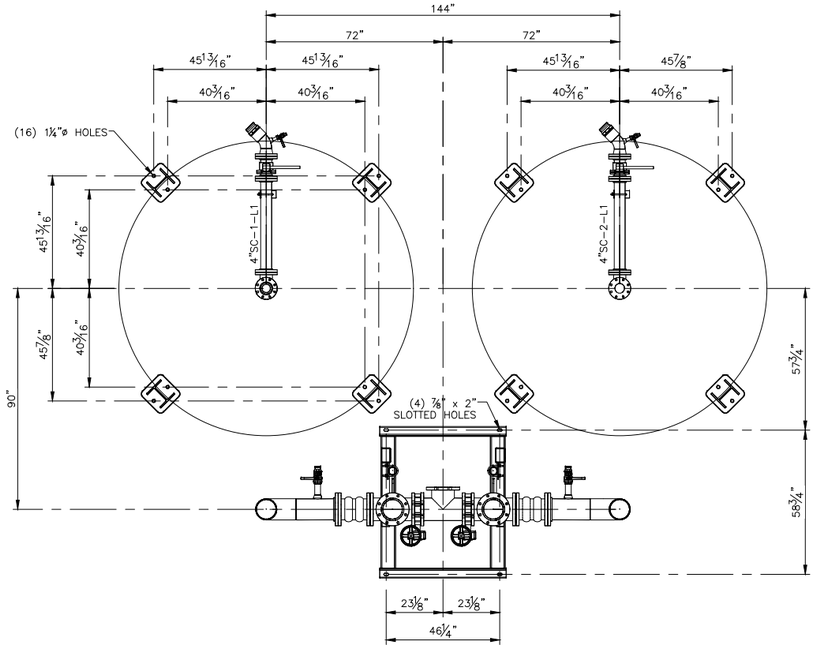

LOWER PLAN

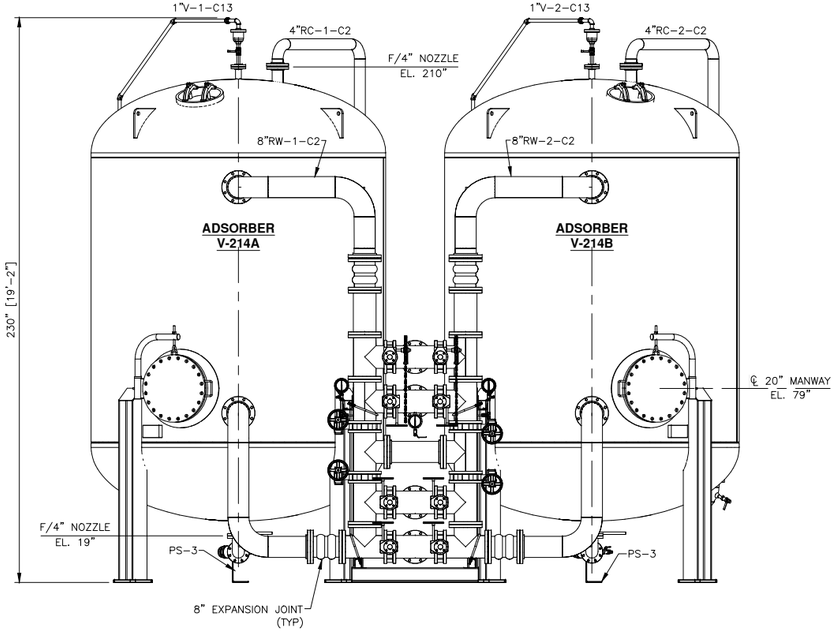

ELEVATION

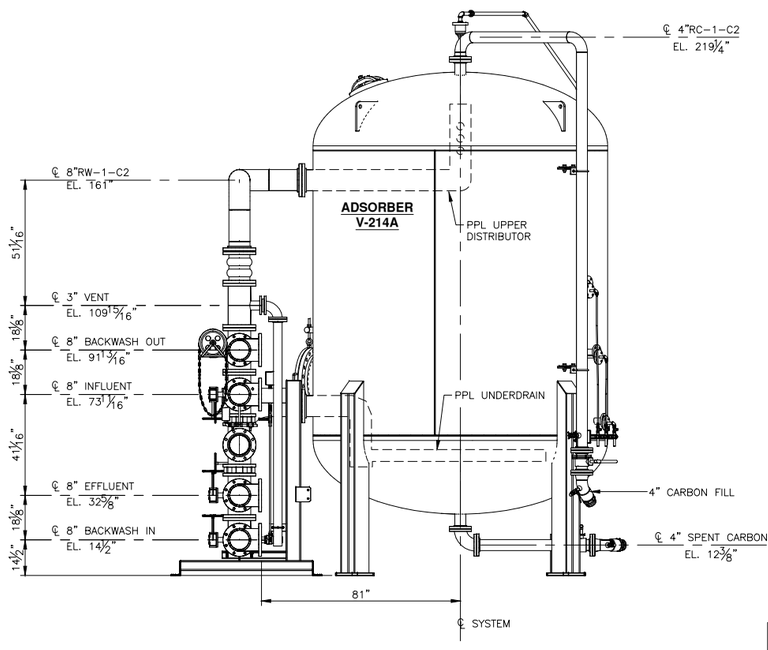

SECTION A-A

SYSTEM DATA	
DESIGN CONDITIONS	125 PSIG @ 140° F
DESIGN CODE	ASME SECTION VIII DIVISION1
APPROXIMATE WEIGHTS (LB.)	
VESSEL (EMPTY)	14,100
CARBON (PER VESSEL)	20,000
VESSEL (OPERATING)	90,000
SYSTEM (EMPTY)	40,000
SYSTEM (OPERATING)	214,000

NOTE:
1.) PIPE PAINTED TO MATCH VESSEL.

PIPE SUPPORT SCHEDULE			
ITEM#	REQ'D	DRAWING#	DESCRIPTION
PS-1	4	90110065	RAW CARBON
PS-2	4	90110118	AIR / VACUUM RELEASE
PS-3	2	91168001	SPENT CARBON
PS-4	2	91167959	SAMPLE/UNDER CONE VENT

REV	DESCRIPTION	APP	DATE
0	ISSUE FOR FABRICATION	RES	6/29/2016

REVISIONS

TOLERANCES (unless otherwise specified)

ANGULAR	±0°30"	DECIMAL (2 PLACES)	±.010
FRACTIONAL	±1/16"	DECIMAL (3 PLACES)	±.005
DECIMAL (1 PLACE)	±.015	DECIMAL (4 PLACES)	±.0005

THIS DRAWING AND DESIGN IS THE PROPERTY OF CALGON CARBON CORPORATION AND IS NOT TO BE REPRODUCED IN WHOLE OR IN PART NOR EMPLOYED FOR ANY PURPOSE OTHER THAN SPECIFICALLY PERMITTED IN WRITING BY CALGON CARBON CORPORATION. THIS DRAWING LOANED SUBJECT TO RETURN ON DEMAND.

	NAME	DATE
DRAFTER	JPARRISH	12/15/2015
DESIGNER		
CHECKER	JFS	6/28/2016
APPROVAL		
PROJECT No.	CTO.150010.KRTAF	

CalgonCarbon

CLIENT
KIRTLAND AFB
ALBUQUERQUE, NM

TITLE
MODEL 10 SYSTEM, 125 PSIG
10'ø VESSEL, 8" PIPING
GENERAL ARRANGEMENT

DWG. Size	SHEET No.	SCALE
D	1 OF 2	NONE
DWG. No. 91157780		REV. 0

V:\2015\CTO.150010.KRTAF\Drawings\General Arrangements\91157780 GA.dwg Oct 12, 2016 - 2:17pm

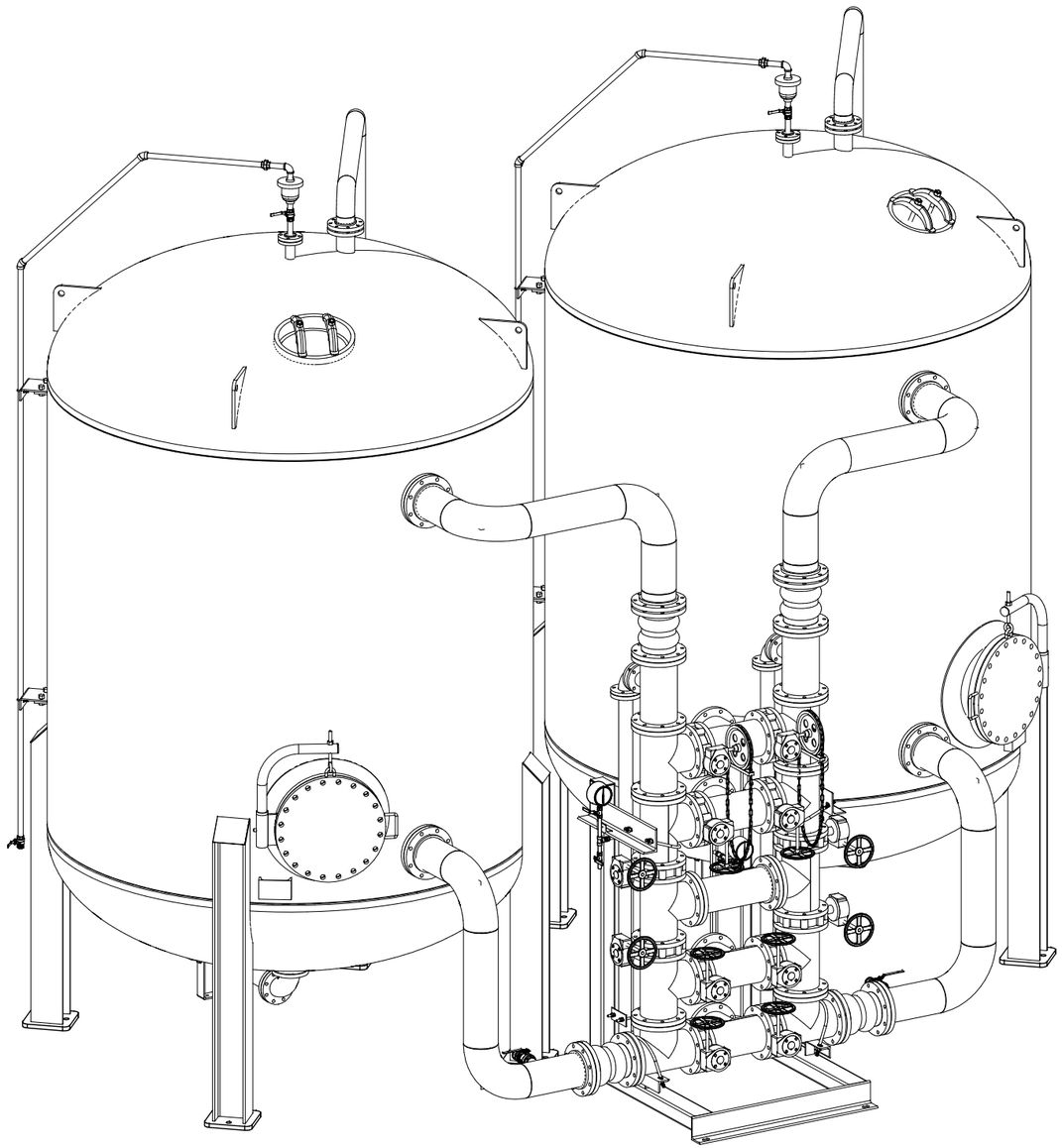

ISOMETRIC FRONT VIEW

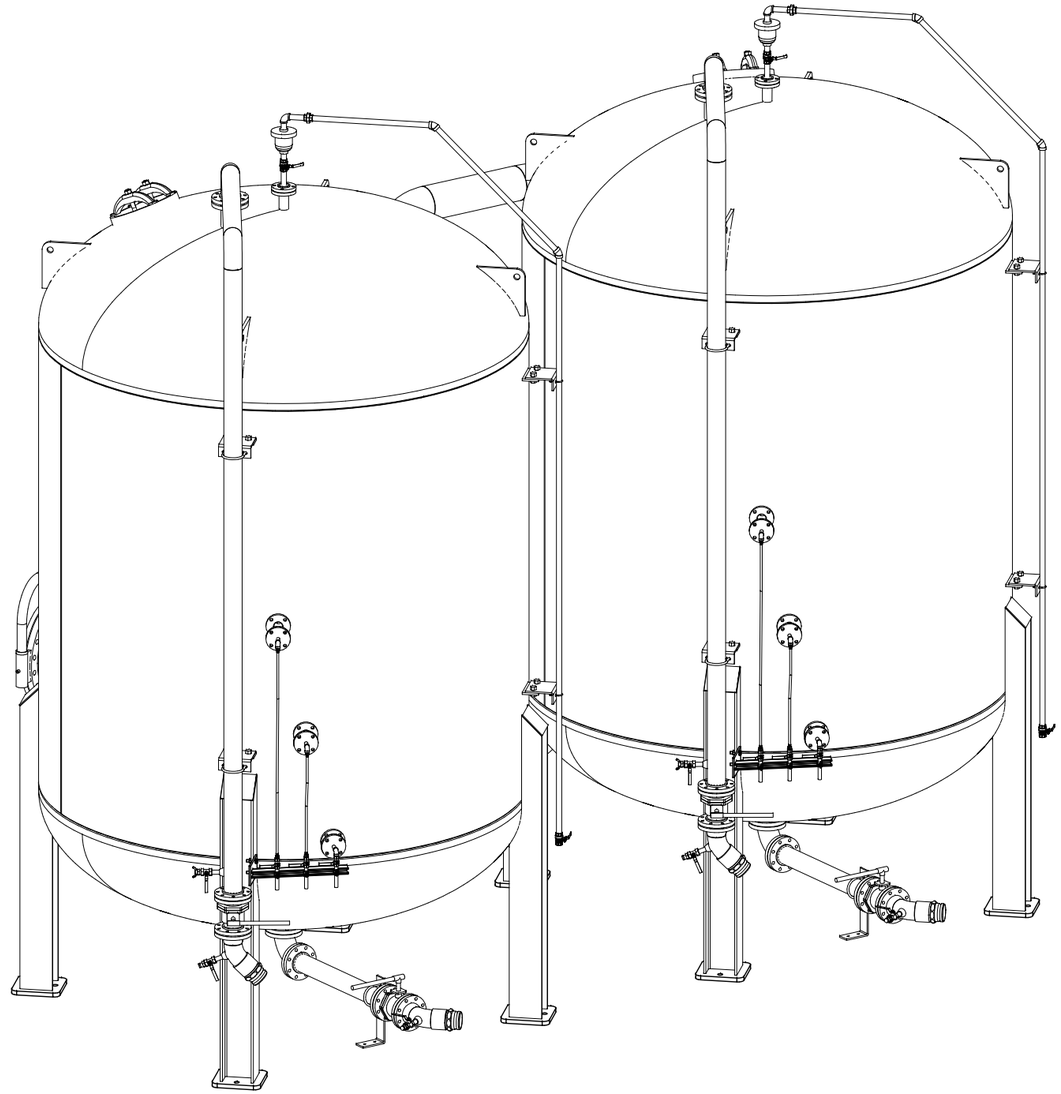

ISOMETRIC REAR VIEW

0	ISSUE FOR FABRICATION	RES	6/29/2016
REV	*DESCRIPTION*	*APP*	*DATE*

REVISIONS

TOLERANCES (unless otherwise specified)

ANGULAR	±0°30"	DECIMAL (2 PLACES)	±.010
FRACTIONAL	±1/16"	DECIMAL (3 PLACES)	±.005
DECIMAL (1 PLACE)	±.015	DECIMAL (4 PLACES)	±.0005

THIS DRAWING AND DESIGN IS THE PROPERTY OF CALGON CARBON CORPORATION AND IS NOT TO BE REPRODUCED IN WHOLE OR IN PART NOR EMPLOYED FOR ANY PURPOSE OTHER THAN SPECIFICALLY PERMITTED IN WRITING BY CALGON CARBON CORPORATION. THIS DRAWING LOANED SUBJECT TO RETURN ON DEMAND.

	NAME	DATE
DRAFTER	JPARRISH	12/15/2015
DESIGNER		
CHECKER	JFS	6/28/2016
APPROVAL		
PROJECT No.	CTO.150010.KRTAF	

CalgonCarbon

CLIENT
KIRTLAND AFB
ALBUQUERQUE, NM

TITLE
MODEL 10 SYSTEM, 125 PSIG
10'ø VESSEL, 8" PIPING
GENERAL ARRANGEMENT

DWG. Size D	*SHEET No.* 2 OF 2	*SCALE* NONE	
DWG. No. 91157780		*REV.* 0	

V:\2015\CTO.150010.KRTAF\Drawings\General Arrangements\91157780 GA.dwg Oct 12, 2016 - 2:19pm

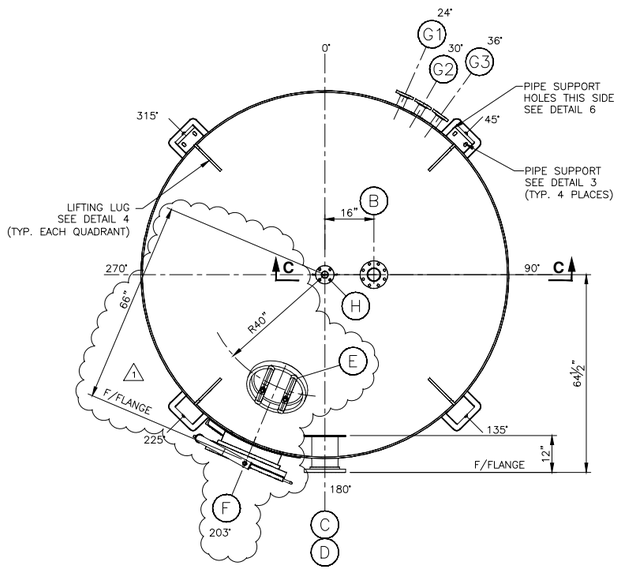

PLAN

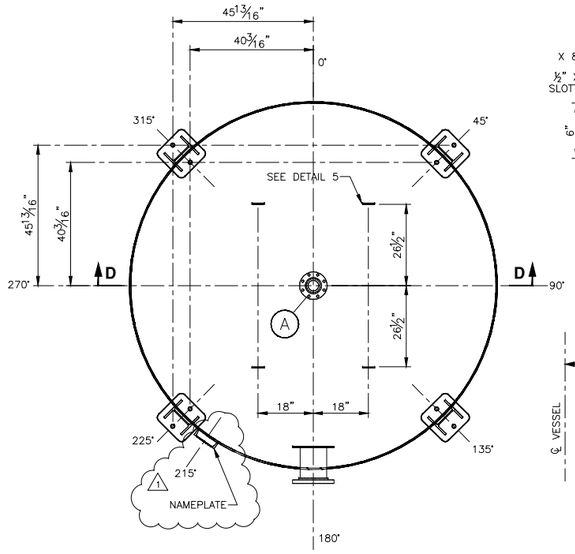

SECTION A-A

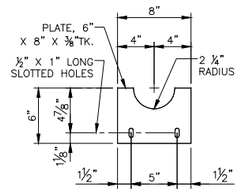

DETAIL 7
UPPER DISTRIBUTOR CLIP

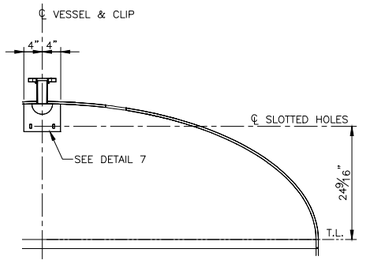

SECTION C-C

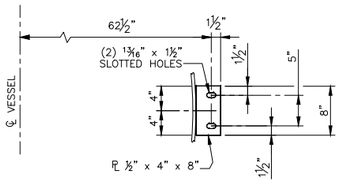

DETAIL 3
PIPE SUPPORT
(4) REQ'D

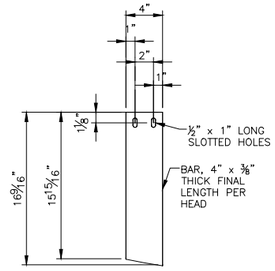

DETAIL 5
UNDER DRAIN CLIP
(4) REQ'D

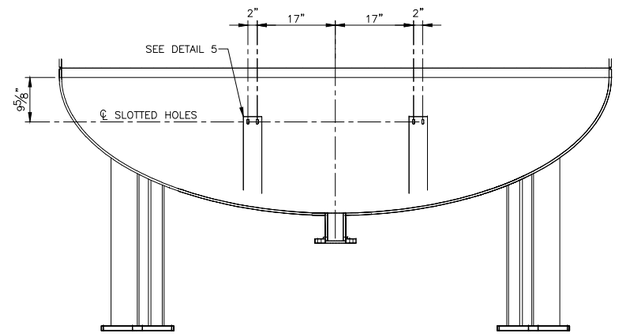

SECTION D-D
UNDER DRAIN CLIP

VESSEL DESCRIPTION	VESSEL V-214A	
REFERENCES	VESSEL SPECIFICATION VS1	
DESIGN CONDITIONS	125 PSIG @ 140° F	
OPERATING CONDITIONS		
PROCESS FLUID	WATER, S.G. = 1.0	
WALL THICKNESS	PER CODE REQUIREMENTS	
MATERIALS OF CONSTRUCTION	SHELL	SA-516 GR. 70
	TOP HEAD	SA-516 GR. 70
	BOT. HEAD	SA-516 GR. 70
	NOZZLES	SA-106 GR. B (UNLESS NOTED)
	FLANGES	SA-105 (UNLESS NOTED)
	LINING	PLASITE 4110 35-45 MIL NOMINAL DFT PER CCC SPEC. VS-7
	FORCE CURED PER NSF 61 CRITERIA	NO
	SUPPORTS	A-992
	BOLTING	MANWAY: A-325 GR 1, GALVANIZED NOZZLES: A-307 GR B, ZINC PLATED
	GASKETS	EPDM (45-55 DUROMETER)
TYPE CONSTRUCTION	FUSION WELDED	
CORROS. ALLOW	NONE	
CODE	ASME SECTION VIII, DIVISION 1, LATEST EDITION	
INSPECTION	BY CALGON & CODE AGENCY	
STAMPING	ASME "U", NBR	
TESTING	HYDROSTATIC PER CODE	
STRESS RELIEF	PER CODE	
RADIOGRAPH	PER CODE AND CALGON CALCULATIONS	
NAMEPLATE	ASME	
STENCILS	LINED TANK – DO NOT WELD OR BURN	
SEISMIC LOAD	IBC 2006, Ss = .458, SITE CLASS D, I = 1.25	
INSULATION	NONE – SEE NOTE 6	
SURFACE PREP	EXTERIOR	BRUSH BLAST PER SSPC-SP7
	INTERIOR	WHITE METAL BLAST PER SSPC-SP5
1 PAINTING	PRIMER COAT	SHERWIN-WILLIAMS RECOATABLE EPOXY PRIMER (LIGHT GRAY)
	FINISH COAT	SHERWIN-WILLIAMS ACROLON 218 PER CCC SPEC. RS-15. COLOR: SW7425 – WHITE 5-7 MILS DFT TOTAL COATING
CAPACITIES	FULL	7,700 GAL
	OPERATING	7,700 GAL AT 100% FILL
	MEDIA	20,000 LBS.
WEIGHTS	EMPTY	14,100 LBS.
	FULL H_2O	79,000 LBS.
	FULL PRODUCT	34,100 LBS. (DRY CARBON)
	OPERATING	90,000 LBS.

NOZZLE SCHEDULE

MARK	REQ'D	SIZE	DRILLING	FACING	DESCRIPTION
A	1	4"	150#	F.F.	CARBON OUTLET
B	1	4"	150#	F.F.	CARBON INLET/VENT
C	1	8"	150#	F.F.	INFLUENT
D	1	8"	150#	F.F.	EFFLUENT
E	1	14X18	ELLIP.		MANWAY W/ ¼" THK. GASKET
F	1	20"	150#	F.F.	MANWAY W/BLIND FLANGE & GASKET
G	3	2"	150#	F.F.	SAMPLE POINT
H	1	2"	150#	F.F.	AIR RELEASE

NOTES:

1. ALL INTERIOR WELDS & EDGES TO BE GROUND TO 1/8" RADIUS MIN.
2. ALL NOZZLES MUST BE FLUSH ON INSIDE OF SHELL, U.O.N
3. 20" MANWAY FLG. TO BE SECURED WITH (2) BOLTS. REMAINDER OF BOLTS & NUTS TO BE PACKAGED AND SHIPPED IN THE CRATE.
4. REMOVE ALL WATER & DIRT AFTER HYDROTEST.
5. REMOVE ALL WELD SPATTER.
6. CONTACT CCC FOR HEAT TRACE REQUIREMENTS.
7. ALL FLANGE BOLT HOLES TO STRADDLE CENTERLINES.
8. FOR MANWAY DETAIL SEE DWG. 90110066.

ELEVATION
SEE PLAN FOR TRUE ORIENTATION

DETAIL 2
SAMPLE POINT
(3) REQ'D

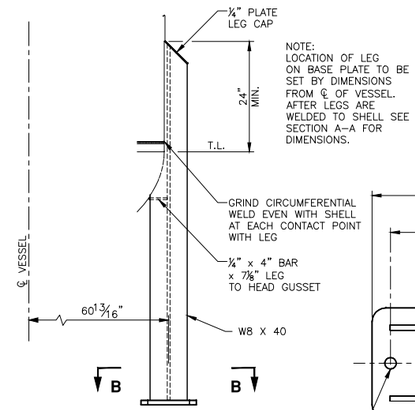

DETAIL 1
VESSEL SUPPORT LEG
(4) REQ'D

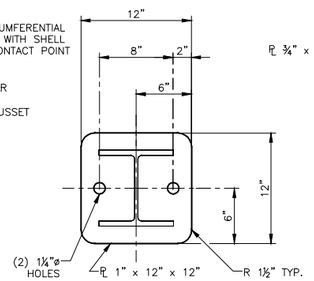

SECTION B-B
BASE PLATE
(4) REQ'D

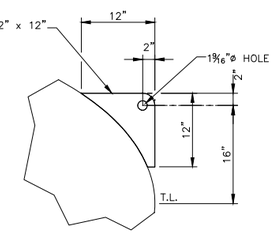

DETAIL 4
LIFTING LUG
(4) REQ'D

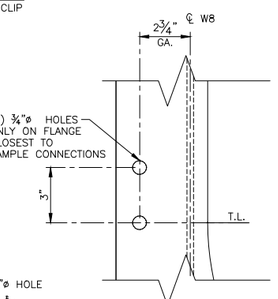

DETAIL 6
AT LEG LOCATED AT 45° ONLY

REV	DESCRIPTION	APP	DATE
1	MANWAYS, SAMPLE NOZZLE, PAINT & COLOR	MHS	7/6/2016
0	ISSUE FOR FABRICATION	MHS	5/16/2016

REVISIONS

TOLERANCES (unless otherwise specified)

ANGULAR	±0°30'	DECIMAL (2 PLACES)	±.010
FRACTIONAL	±1/16"	DECIMAL (3 PLACES)	±.005
DECIMAL (1 PLACE)	±.015	DECIMAL (4 PLACES)	±.0005

THIS DRAWING AND DESIGN IS THE PROPERTY OF CALGON CARBON CORPORATION AND IS NOT TO BE REPRODUCED IN WHOLE OR IN PART NOR EMPLOYED FOR ANY PURPOSE OTHER THAN SPECIFICALLY PERMITTED IN WRITING BY CALGON CARBON CORPORATION. THIS DRAWING LOANED SUBJECT TO RETURN ON DEMAND.

	NAME	DATE
DRAFTER	JPARRISH	12/18/2015
DESIGNER		
CHECKER	M. SAULSBERY	5/16/2016
APPROVAL		
PROJECT No.	CTO.150010.KRTAF	

CalgonCarbon

CLIENT: KIRTLAND AFB ALBUQUERQUE, NM

TITLE: MODEL 10, 125 PSIG 10 FT DIA. VESSEL ARRANGEMENT

DWG. Size	SHEET No.	SCALE
D	1 OF 2	NONE

DWG. No. 91157781 REV. 1

C:\Users\jparrish\oppdata\local\temp\AcPublish_2096\91157781 PV1 Ves Argt.dwg Jul 06, 2016 - 11:24am

BILL OF MATERIAL					
ITEM	QTY.	DESCRIPTION	MATERIAL	SAP No.	CCC SPEC
1	80	SEPTA	PPL	---	22.106
2	1	DECAL, DANGER, MANWAY	---	1058401	---
3	2	DECAL, CALGON LOGO	---	1059524	---
4	2	DECAL, LINED TANK	---	1025014	---
5	1	DECAL, DANGER, ELLIPTICAL MANWAY	---	1002706	---
6	1	GASKET, ELLIPTICAL 14" X 18" X ¼" THICK	WHITE EPDM	1053980	G46
7	1	GASKET, 20", 150#, ⅛" THICK	WHITE EPDM	1054140	G46
8	20	BOLT, 1 ⅛" X 5" LG, HVY. HEX W/ NUT, GALVANIZED	A-325 GR 1	1060550	---

MATERIAL FOR ONE VESSEL, TWO REQUIRED

NOTES:

1.) LOCATE MANWAY DANGER DECALS ITEMS (2) & (5) AS SHOWN.

2.) LOCATE LINED TANK DECALS ITEM (4) NEAR BOTTOM WELD SEAM TO CLEAR PIPING.

3.) LOCATE CCC LOGOS ITEM (3) AT 0° & 180°, HEIGHT AS SHOWN.

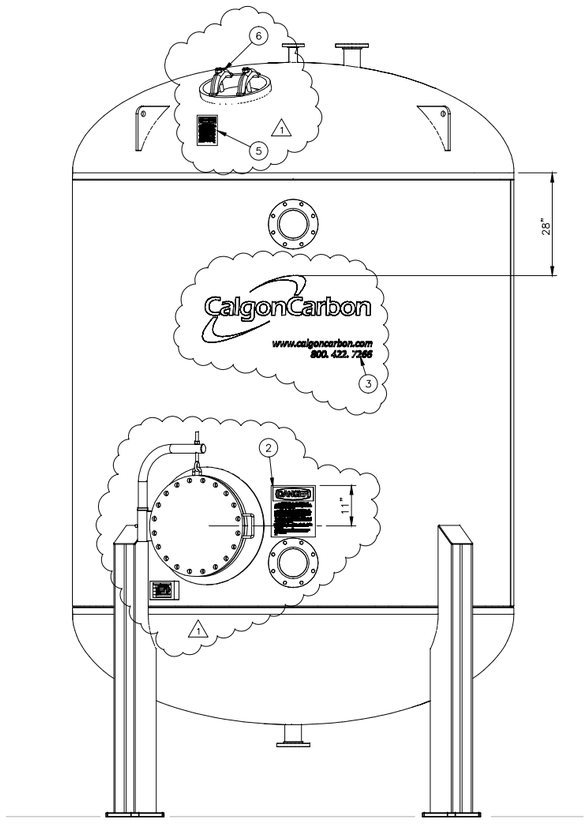

FRONT ELEVATION

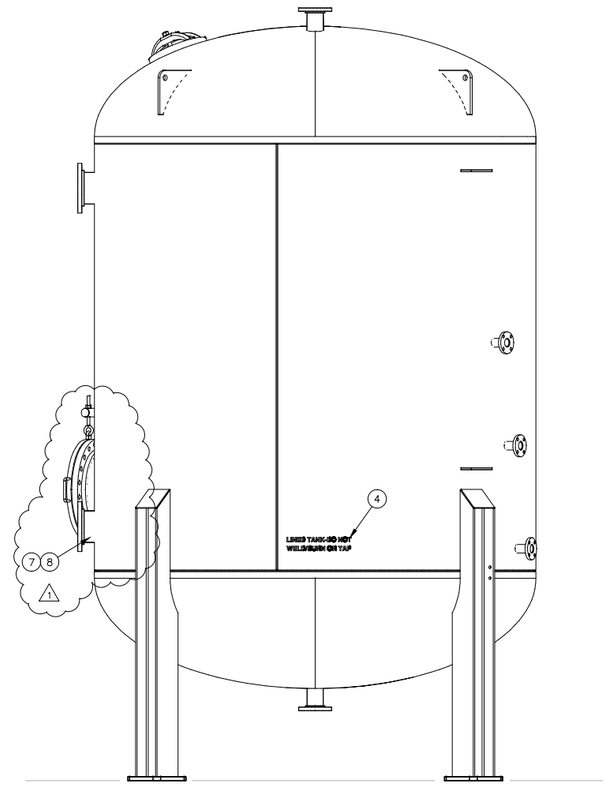

RIGHT ELEVATION

THIS DRAWING AND DESIGN IS THE PROPERTY OF CALGON CARBON CORPORATION AND IS NOT TO BE REPRODUCED IN WHOLE OR IN PART NOR EMPLOYED FOR ANY PURPOSE OTHER THAN SPECIFICALLY PERMITTED IN WRITING BY CALGON CARBON CORPORATION. THIS DRAWING LOANED SUBJECT TO RETURN ON DEMAND.

	NAME	DATE
DRAFTER	JPARRISH	12/18/2015
DESIGNER		
CHECKER	M. SAULSBERY	5/16/2016
APPROVAL		
PROJECT No.	CTO.150010.KRTAF	

REV	DESCRIPTION	APP	DATE
1	MANWAYS, SAMPLE NOZZLE, PAINT & COLOR	MHS	7/6/2016
0	ISSUE FOR FABRICATION	MHS	5/16/2016

REVISIONS

TOLERANCES (unless otherwise specified)

ANGULAR	±0°30'	DECIMAL (2 PLACES)	±.010
FRACTIONAL	±1/16"	DECIMAL (3 PLACES)	±.005
DECIMAL (1 PLACE)	±.015	DECIMAL (4 PLACES)	±.0005

CalgonCarbon

CLIENT: KIRTLAND AFB
ALBUQUERQUE, NM

TITLE: MODEL 10, 125 PSIG
10 FT DIA.
VESSEL ARRANGEMENT

DWG. Size	SHEET No.	SCALE
D	2 OF 2	NONE

DWG. No. 91157781 REV. 1

C:\Users\jparrish\oppdata\local\temp\AcPublish_2096\91157781 PV1 Ves Arrgt.dwg Jul 06, 2016 - 11:24am

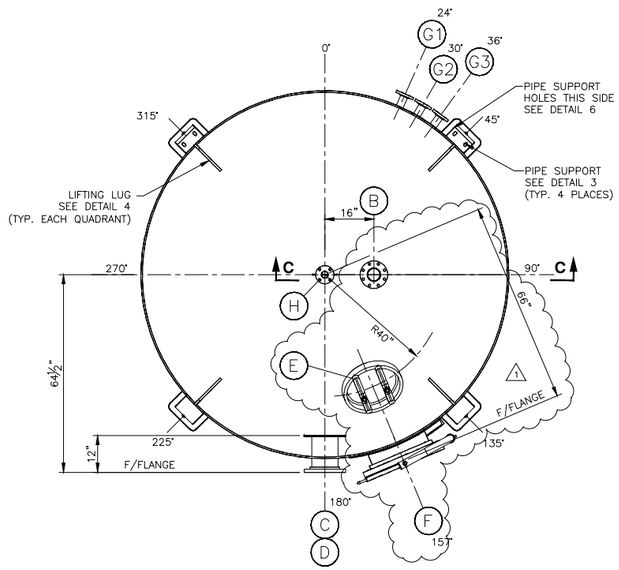

PLAN

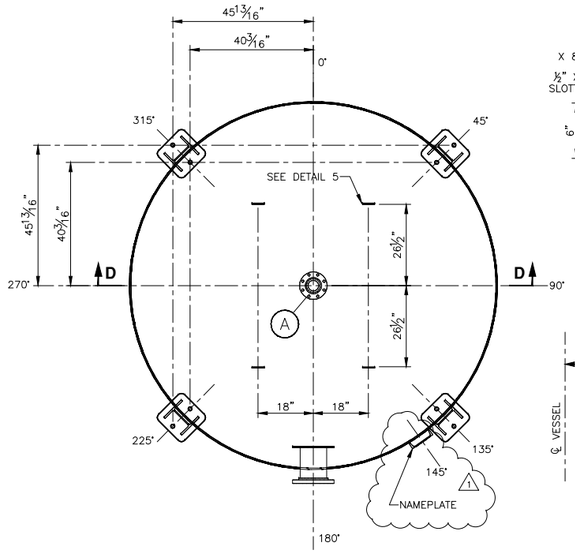

SECTION A-A

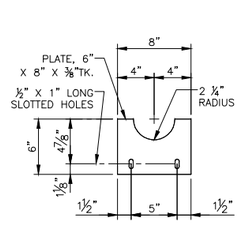

DETAIL 7
UPPER DISTRIBUTOR CLIP

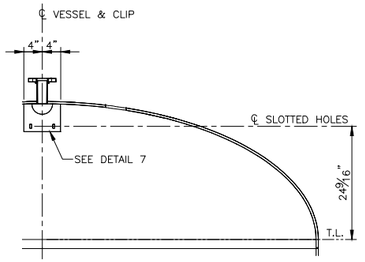

SECTION C-C

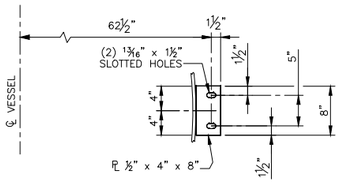

DETAIL 3
PIPE SUPPORT
(4) REQ'D

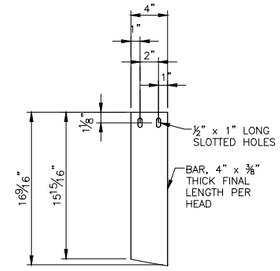

DETAIL 5
UNDER DRAIN CLIP
(4) REQ'D

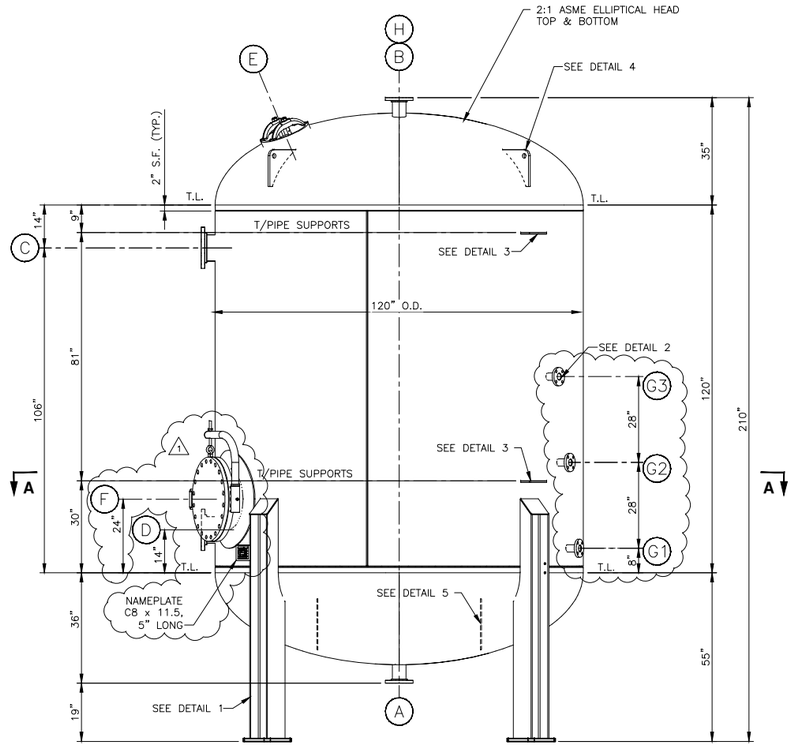

ELEVATION
SEE PLAN FOR TRUE ORIENTATION

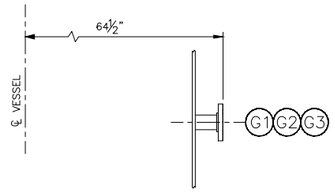

DETAIL 2
SAMPLE POINT
(3) REQ'D

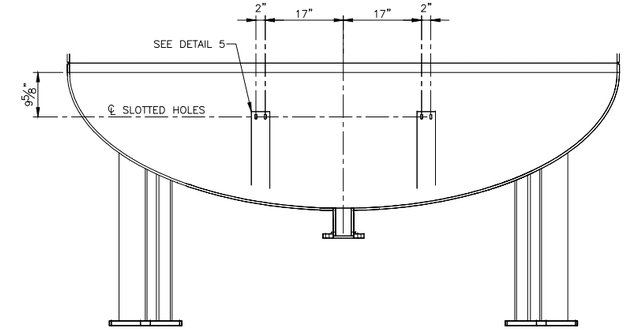

SECTION D-D
UNDER DRAIN CLIP

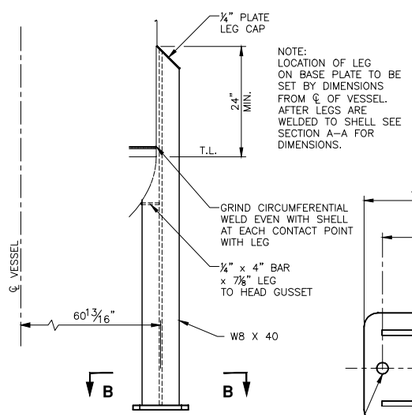

DETAIL 1
VESSEL SUPPORT LEG
(4) REQ'D

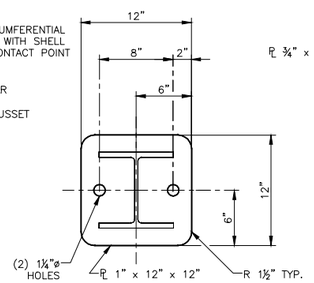

SECTION B-B
BASE PLATE
(4) REQ'D

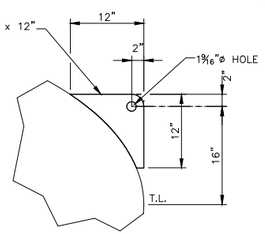

DETAIL 4
LIFTING LUG
(4) REQ'D

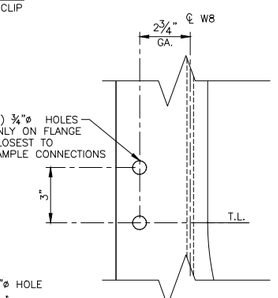

DETAIL 6
AT LEG LOCATED AT 45° ONLY

VESSEL DESCRIPTION	VESSEL V-214B
REFERENCES	VESSEL SPECIFICATION VS1
DESIGN CONDITIONS	125 PSIG @ 140° F
OPERATING CONDITIONS	
PROCESS FLUID	WATER, S.G. = 1.0

WALL THICKNESS	PER CODE REQUIREMENTS		
MATERIALS OF CONSTRUCTION	SHELL	SA-516 GR. 70	
	TOP HEAD	SA-516 GR. 70	
	BOT. HEAD	SA-516 GR. 70	
	NOZZLES	SA-106 GR. B (UNLESS NOTED)	
	FLANGES	SA-105 (UNLESS NOTED)	
	LINING	PLASITE 4110 35-45 MIL NOMINAL DFT PER CCC SPEC. VS-7	
	FORCE CURED PER NSF 61 CRITERIA		NO
	SUPPORTS	A-992	
	BOLTING	MANWAY: A-325 GR 1, GALVANIZED NOZZLES: A-307 GR B, ZINC PLATED	
	GASKETS	EPDM (45-55 DUROMETER)	

TYPE CONSTRUCTION	FUSION WELDED	
CORROS. ALLOW	NONE	
CODE	ASME SECTION VIII, DIVISION 1, LATEST EDITION	
INSPECTION	BY CALGON & CODE AGENCY	
STAMPING	ASME "U", NBR	
TESTING	HYDROSTATIC PER CODE	
STRESS RELIEF	PER CODE	
RADIOGRAPH	PER CODE AND CALGON CALCULATIONS	
NAMEPLATE	ASME	
STENCILS	LINED TANK - DO NOT WELD OR BURN	
SEISMIC LOAD	IBC 2006, Ss = .458, SITE CLASS D, I = 1.25	
INSULATION	NONE - SEE NOTE 6	
SURFACE PREP	EXTERIOR	BRUSH BLAST PER SSPC-SP7
	INTERIOR	WHITE METAL BLAST PER SSPC-SP5
1 PAINTING	PRIMER COAT	SHERWIN-WILLIAMS RECOATABLE EPOXY PRIMER (LIGHT GRAY)
	FINISH COAT	SHERWIN-WILLIAMS ACROLON 218 PER CCC SPEC. RS-15. COLOR: SW7425 - WHITE 5-7 MILS DFT TOTAL COATING
CAPACITIES	FULL	7,700 GAL
	OPERATING	7,700 GAL AT 100% FILL
	MEDIA	20,000 LBS.
WEIGHTS	EMPTY	14,100 LBS.
	FULL H_2O	79,000 LBS.
	FULL PRODUCT	34,100 LBS. (DRY CARBON)
	OPERATING	90,000 LBS.

NOZZLE SCHEDULE

MARK	REQ'D	SIZE	DRILLING	FACING	DESCRIPTION
A	1	4"	150#	F.F.	CARBON OUTLET
B	1	4"	150#	F.F.	CARBON INLET/VENT
C	1	8"	150#	F.F.	INFLUENT
D	1	8"	150#	F.F.	EFFLUENT
E	1	14X18	ELLIP.		MANWAY W/ ¼" THK. GASKET
F	1	20"	150#	F.F.	MANWAY W/BLIND FLANGE & GASKET
G	3	2"	150#	F.F.	SAMPLE POINT
H	1	2"	150#	F.F.	AIR RELEASE

NOTES:

1. ALL INTERIOR WELDS & EDGES TO BE GROUND TO 1/8" RADIUS MIN.
2. ALL NOZZLES MUST BE FLUSH ON INSIDE OF SHELL, U.O.N
3. 20" MANWAY FLG. TO BE SECURED WITH (2) BOLTS. REMAINDER OF BOLTS & NUTS TO BE PACKAGED AND SHIPPED IN THE CRATE.
4. REMOVE ALL WATER & DIRT AFTER HYDROTEST.
5. REMOVE ALL WELD SPATTER.
6. CONTACT CCC FOR HEAT TRACE REQUIREMENTS.
7. ALL FLANGE BOLT HOLES TO STRADDLE CENTERLINES.
8. FOR MANWAY DETAIL SEE DWG. 90110066.

REV	DESCRIPTION	APP	DATE
1	MANWAYS, SAMPLE NOZZLES, PAINT & COLOR	MHS	7/6/2016
0	ISSUE FOR FABRICATION	MHS	5/16/2016

REVISIONS

TOLERANCES (unless otherwise specified)

ANGULAR	±0°30'	DECIMAL (2 PLACES)	±.010
FRACTIONAL	±1/16"	DECIMAL (3 PLACES)	±.005
DECIMAL (1 PLACE)	±.015	DECIMAL (4 PLACES)	±.0005

THIS DRAWING AND DESIGN IS THE PROPERTY OF CALGON CARBON CORPORATION AND IS NOT TO BE REPRODUCED IN WHOLE OR IN PART NOR EMPLOYED FOR ANY PURPOSE OTHER THAN SPECIFICALLY PERMITTED IN WRITING BY CALGON CARBON CORPORATION. THIS DRAWING LOANED SUBJECT TO RETURN ON DEMAND.

	NAME	DATE
DRAFTER	JPARRISH	12/18/2015
DESIGNER		
CHECKER	M. SAULSBERY	5/16/2016
APPROVAL		
PROJECT No.	CTO.150010.KRTAF	

CalgonCarbon

CLIENT: KIRTLAND AFB ALBUQUERQUE, NM

TITLE: MODEL 10, 125 PSIG 10 FT DIA. VESSEL ARRANGEMENT

DWG. Size	SHEET No.	SCALE
D	1 OF 2	NONE

DWG. No. 91157782 REV. 1

C:\Users\jparrish\oppdata\local\temp\AcPublish_2096\91157782 PV2 Ves Arrgt.dwg Jul 06, 2016 - 11:24am

BILL OF MATERIAL					
ITEM	QTY.	DESCRIPTION	MATERIAL	SAP No.	CCC SPEC
1	80	SEPTA	PPL	---	22.106
2	1	DECAL, DANGER, MANWAY	---	1058401	---
3	2	DECAL, CALGON LOGO	---	1059524	---
4	2	DECAL, LINED TANK	---	1025014	---
5	1	DECAL, DANGER, ELLIPTICAL MANWAY	---	1002706	---
6	1	GASKET, ELLIPTICAL 14" X 18" X ¼" THICK	WHITE EPDM	1053980	G46
7	1	GASKET, 20", 150#, ¼" THICK	WHITE EPDM	1054140	G46
8	20	BOLT, 1 ⅛" X 5" LG, HVY. HEX W/ NUT, GALVANIZED	A-325 GR 1	1060550	---

MATERIAL FOR ONE VESSEL, TWO REQUIRED

NOTES:

1.) LOCATE MANWAY DANGER DECALS ITEMS (2) & (5) AS SHOWN.

2.) LOCATE LINED TANK DECALS ITEM (4) NEAR BOTTOM WELD SEAM TO CLEAR PIPING.

3.) LOCATE CCC LOGOS ITEM (3) AT 0° & 180°, HEIGHT AS SHOWN.

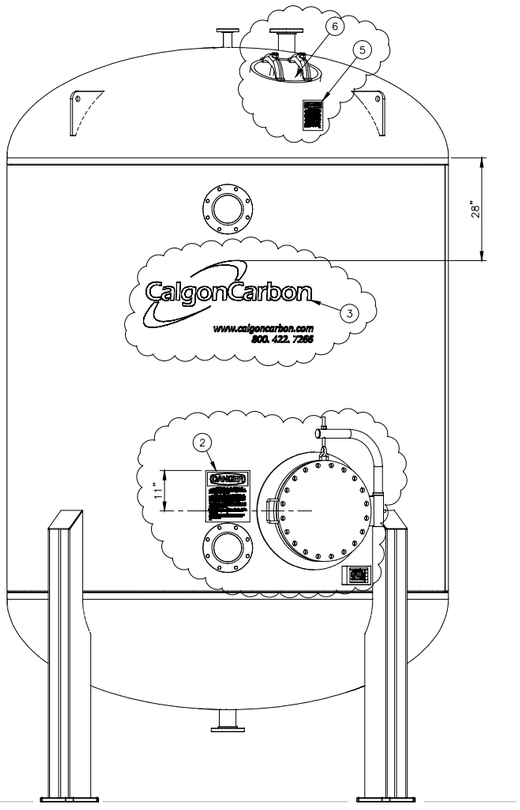

FRONT ELEVATION

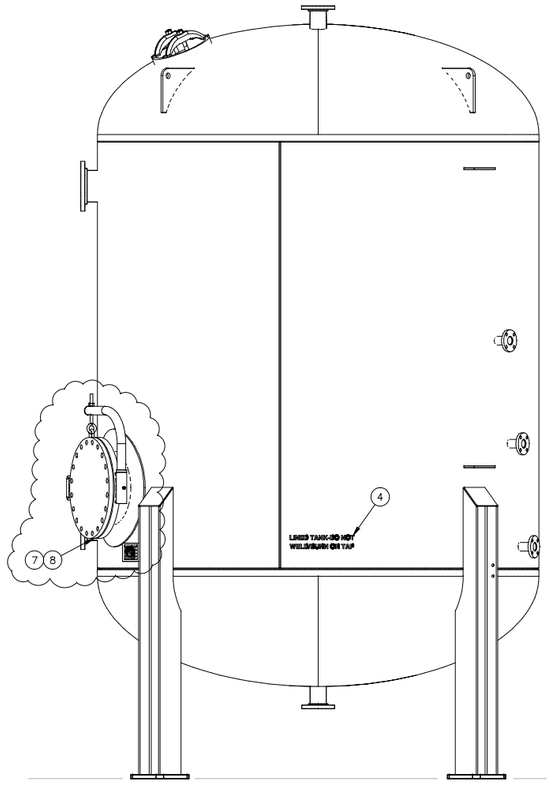

RIGHT ELEVATION

THIS DRAWING AND DESIGN IS THE PROPERTY OF CALGON CARBON CORPORATION AND IS NOT TO BE REPRODUCED IN WHOLE OR IN PART NOR EMPLOYED FOR ANY PURPOSE OTHER THAN SPECIFICALLY PERMITTED IN WRITING BY CALGON CARBON CORPORATION. THIS DRAWING LOANED SUBJECT TO RETURN ON DEMAND.

	NAME	DATE
DRAFTER	JPARRISH	12/18/2015
DESIGNER		
CHECKER	M. SAULSBERY	5/16/2016
APPROVAL		
PROJECT No.	CTO.150010.KRTAF	

REV	DESCRIPTION	APP	DATE
1	MANWAYS, SAMPLE NOZZLES, PAINT & COLOR	MHS	7/6/2016
0	ISSUE FOR FABRICATION	MHS	5/16/2016

REVISIONS

TOLERANCES (unless otherwise specified)

ANGULAR	±0°30'	DECIMAL (2 PLACES)	±.010
FRACTIONAL	±1/16"	DECIMAL (3 PLACES)	±.005
DECIMAL (1 PLACE)	±.015	DECIMAL (4 PLACES)	±.0005

CalgonCarbon

CLIENT: KIRTLAND AFB
ALBUQUERQUE, NM

TITLE: MODEL 10, 125 PSIG
10 FT DIA.
VESSEL ARRANGEMENT

DWG. Size	SHEET No.	SCALE
D	2 OF 2	NONE

DWG. No. 91157782 REV. 1

C:\Users\jparrish\appdata\local\temp\AcPublish_2096\91157782 PV2 Ves Arrgt.dwg Jul 06, 2016 - 11:24am

SIEMENS

SITRANS

Pressure transmitter
SITRANS P DS III/P410 with PROFIBUS PA

Operating Instructions

Edition 02/2016

Answers for industry.

SIEMENS

SITRANS

Pressure transmitter SITRANS P DS III/P410 with PROFIBUS PA

Operating Instructions

7MF4.34

02/2016
A5E00053276-08

Introduction 1
Safety information 2
Description 3
Installing / mounting 4
Connecting up 5
Operation 6
Operator control functions via PROFIBUS 7
Functional safety 8
Configuration/project engineering 9
Commissioning 10
Repair and maintenance 11
Interrupts, error and system alarms 12
Technical data 13
Dimension drawings 14
Spare parts / accessories 15
Appendix A
List of abbreviations/acronyms B

Legal information

Warning notice system

This manual contains notices you have to observe in order to ensure your personal safety, as well as to prevent damage to property. The notices referring to your personal safety are highlighted in the manual by a safety alert symbol, notices referring only to property damage have no safety alert symbol. These notices shown below are graded according to the degree of danger.

⚠ DANGER

indicates that death or severe personal injury **will** result if proper precautions are not taken.

⚠ WARNING

indicates that death or severe personal injury **may** result if proper precautions are not taken.

⚠ CAUTION

indicates that minor personal injury can result if proper precautions are not taken.

NOTICE

indicates that property damage can result if proper precautions are not taken.

If more than one degree of danger is present, the warning notice representing the highest degree of danger will be used. A notice warning of injury to persons with a safety alert symbol may also include a warning relating to property damage.

Qualified Personnel

The product/system described in this documentation may be operated only by **personnel qualified** for the specific task in accordance with the relevant documentation, in particular its warning notices and safety instructions. Qualified personnel are those who, based on their training and experience, are capable of identifying risks and avoiding potential hazards when working with these products/systems.

Proper use of Siemens products

Note the following:

⚠ WARNING

Siemens products may only be used for the applications described in the catalog and in the relevant technical documentation. If products and components from other manufacturers are used, these must be recommended or approved by Siemens. Proper transport, storage, installation, assembly, commissioning, operation and maintenance are required to ensure that the products operate safely and without any problems. The permissible ambient conditions must be complied with. The information in the relevant documentation must be observed.

Trademarks

All names identified by ® are registered trademarks of Siemens AG. The remaining trademarks in this publication may be trademarks whose use by third parties for their own purposes could violate the rights of the owner.

Disclaimer of Liability

We have reviewed the contents of this publication to ensure consistency with the hardware and software described. Since variance cannot be precluded entirely, we cannot guarantee full consistency. However, the information in this publication is reviewed regularly and any necessary corrections are included in subsequent editions.

Siemens AG
Division Process Industries and Drives
Postfach 48 48
90026 NÜRNBERG
GERMANY

Document order number: A5E00053276
℗ 03/2016 Subject to change

Copyright © Siemens AG 2016.
All rights reserved

Table of contents

1 Introduction 11

1.1 Purpose of this documentation 11
1.2 Product information 11
1.3 History 11
1.4 Scope of the instructions 12
1.5 Checking the consignment 12
1.6 Transportation and storage 13
1.7 Notes on warranty 13

2 Safety information 15

2.1 Precondition for use 15
2.1.1 Laws and directives 15
2.1.2 Conformity with European directives 15
2.2 Improper device modifications 16
2.3 Requirements for special applications 16
2.4 Use in hazardous areas 17
2.4.1 Use of incorrect device parts in potentially explosive environments 18
2.4.2 Electrostatic-sensitive devices 19

3 Description 21

3.1 System configuration 21
3.2 Application 22
3.3 SITRANS P DS III and SITRANS P410 24
3.4 Structure 24
3.5 Nameplate layout 26
3.6 Measuring point label layout 27
3.7 Principle of operation 27
3.7.1 Overview of mode of operation 27
3.7.2 Operation of the electronics 28
3.7.3 Principle of operation of the measuring cell 29
3.7.3.1 Measuring cell for gauge pressure 30
3.7.3.2 Measuring cell for differential pressure and flow rate 31
3.7.3.3 Measuring cell for level 32
3.7.3.4 Measuring cell for absolute pressure from the differential pressure series 33
3.7.3.5 Measuring cell for absolute pressure from the gauge pressure series 34
3.7.3.6 Measuring cell for gauge pressure, front-flush membrane 34
3.7.3.7 Measuring cell for absolute pressure, front-flush membrane 35
3.8 Remote seal 36

3.9 SIMATIC PDM ... 36
3.10 PROFIBUS ... 37
3.10.1 Transmission technology ... 37
3.10.2 Bus topology ... 37
3.10.3 Properties ... 38
4 Installing / mounting ... 39
4.1 Basic safety instructions ... 39
4.1.1 Installation location requirements ... 43
4.1.2 Proper mounting ... 43
4.2 Disassembly ... 44
4.2.1 Incorrect disassembly ... 44
4.3 Installation (except level) ... 45
4.3.1 Installation mounting (except for level) ... 45
4.3.2 Installation (except level) ... 46
4.3.3 Fastening ... 46
4.4 "Level" installation ... 48
4.4.1 Instructions for level installation ... 48
4.4.2 Installation for level ... 49
4.4.3 Connection of the negative pressure line ... 50
4.5 "Remote seal" installation ... 53
4.5.1 Remote seal installation ... 53
4.5.2 Installation of the remote seal with the capillary line ... 54
4.6 Turing the measuring cell against housing ... 60
4.7 Rotating the display ... 61
5 Connecting up ... 63
5.1 Basic safety instructions ... 63
5.1.1 Hazardous contact voltage in versions with 4-conductor extension ... 63
5.1.2 Incorrect measured values with incorrect grounding ... 65
5.2 Connecting the device ... 66
5.2.1 PROFIBUS assembly guidelines ... 66
5.3 Connecting the M12 connector ... 68
6 Operation ... 71
6.1 Overview of operation ... 71
6.2 Basic safety instructions ... 72
6.3 Information on operation ... 72
6.4 Display ... 73
6.4.1 Display elements ... 73
6.4.2 Units display ... 74
6.4.3 Error display ... 74
6.4.4 Mode display ... 75
6.4.5 Status display ... 76
6.5 Local operation ... 76
6.5.1 Control elements for local operation ... 76

6.5.2 Operation using buttons 79
6.5.3 Setting/adjusting electrical damping 79
6.5.4 Calibrate zero point 80
6.5.5 Locking of buttons and functions 81
6.5.6 Measured value display 82
6.5.7 Unit 84
6.5.8 Bus address 88
6.5.9 Device operation type 88
6.5.10 Position of the decimal point 90
6.5.11 Display of the zero-point adjustment 90
6.5.12 LO calibration 91
6.5.13 HI calibration 92

7 Operator control functions via PROFIBUS 95

7.1 Communications structure for PROFIBUS PA 95
7.1.1 Overview 95
7.1.2 Block model for collection and processing of measured values 95
7.1.3 Pressure transducer block 98
7.1.3.1 Pressure transducer block (transducer block 1) 98
7.1.3.2 Linearization type function group 100
7.1.3.3 Units of the pressure transducer block 102
7.1.4 Electronics temperature transducer block 103
7.1.5 Analog input function block 104
7.1.6 Totalizer function block 105
7.2 Overview of operating functions 106
7.3 Measurement 106
7.4 Settings 107
7.4.1 Overview of settings 107
7.4.2 Settings 107
7.4.3 Pressure measurement 107
7.4.4 Level measurement 108
7.4.5 Flow measurement 111
7.4.6 Adjusting to a desired process value 114
7.5 Electrical damping (filter time constant) 116
7.6 Key lock and write protection 116
7.7 Warning and alarm limits 117
7.8 Failure behavior 119
7.8.1 Overview of failure behavior 119
7.8.2 Output 119
7.8.3 Totalizer output 119
7.9 Diagnostics functions 120
7.9.1 Operating hours counter 120
7.9.2 Calibration interval and service interval 120
7.9.3 Clearing warning 121
7.9.4 Clearing the alarm 121
7.9.5 Min/max indicator 122
7.10 Simulation 122
7.10.1 Overview of simulation 122

7.10.2 Simulating output ... 123
7.10.3 Simulating input ... 123
7.10.4 Simulating the pressure sensor ... 124
7.10.5 Simulating sensor and electronics temperature ... 125
7.11 Calibrating the sensor ... 125
7.12 Correcting for positional error ... 126
7.13 Reset ... 127
7.13.1 Resetting to delivery state ... 127
7.13.2 Warm start/restart ... 128
7.13.3 Resetting the PROFIBUS address ... 128
8 Functional safety ... 129
8.1 Safety function ... 129
8.2 Safety Integrity Level (SIL) ... 130
8.3 Settings ... 132
8.4 Safety-related characteristics ... 132
8.5 Maintenance/check ... 133
8.5.1 Overview ... 133
8.5.2 Checking safety function/proof test ... 134
8.5.2.1 Checking temperature sensors ... 135
8.5.2.2 Check response time of pressure transmitter. ... 135
8.5.2.3 Two-point measurement ≥ 10% of the maximum measuring range ... 135
8.5.2.4 Two-point measurement ≥ 50% of the maximum measuring range ... 138
8.5.2.5 Checking pressure transmitter for external damage ... 140
8.6 Add-on parts ... 140
8.6.1 Checking a device with add-on pneumatic block ... 140
8.6.2 Checking a device with add-on remote seal ... 141
8.7 PROFIsafe ... 141
8.7.1 Introduction ... 141
8.7.2 Technical advantages of PROFIsafe ... 141
8.7.3 Further information ... 143
8.7.4 Preconditions ... 144
8.7.5 PROFIsafe Configuration ... 144
8.7.5.1 Import EDD with SIMATIC PDM ... 145
8.7.5.2 Configure CPU with HW Config ... 145
8.7.5.3 Configure device with HW Config ... 145
8.7.5.4 Configure CFC ... 148
8.7.6 Write protection ... 150
8.7.6.1 Overview ... 150
8.7.6.2 Activate write protection using PIN in SIMATIC PDM ... 151
8.7.7 PROFIsafe Commissioning ... 151
8.7.7.1 Activate and parameterize PROFIsafe with SIMATIC PDM ... 152
8.7.7.2 Commission PROFIsafe with SIMATIC PDM ... 153
8.7.7.3 Check write protection with SIMATIC PDM ... 158
8.7.7.4 Speeding up the commissioning process ... 159
8.7.7.5 Resetting the device ... 159
8.7.8 Quit PROFIsafe commissioning ... 160
8.7.8.1 Preparations for maintenance and service ... 160

8.7.8.2 Deactivating PROFIsafe commissioning in SIMATIC PDM 160
8.7.8.3 Disable write protection using PIN in SIMATIC PDM 160
8.7.9 Replacing a device 161
8.7.9.1 Making settings locally 161
8.7.9.2 Configuration with host system 162

9 Configuration/project engineering 165

9.1 Cyclical data transfer 165

9.2 Configuring 165
9.2.1 Overview of configuration 165
9.2.2 Configuration of user data 165
9.2.3 Transmission of user data over PROFIBUS 167
9.2.4 Status 167
9.2.5 Diagnosis 168

9.3 Acyclic data transfer 170

10 Commissioning 171

10.1 Basic safety instructions 171

10.2 Introduction to commissioning 171

10.3 Gauge pressure, absolute pressure from differential pressure series, and absolute pressure from gauge pressure series 172
10.3.1 Commissioning for gases 172
10.3.2 Commissioning with steam or liquid 174

10.4 Differential pressure and flow rate 175
10.4.1 Safety notes for commissioning with differential pressure and flow rate 175
10.4.2 Commissioning in gaseous environments 176
10.4.3 Commissioning for liquids 177
10.4.4 Commissioning with vapor 179

11 Repair and maintenance 181

11.1 Basic safety instructions 181

11.2 Maintenance and repair work 184
11.2.1 Defining the maintenance interval 184
11.2.2 Checking the gaskets 185
11.2.3 Display in case of a fault 185
11.2.4 Changing the measuring cell and application electronics 186

11.3 Cleaning 186
11.3.1 Servicing the remote seal measuring system 187

11.4 Return procedure 187

11.5 Disposal 188

12 Interrupts, error and system alarms 189

12.1 Overview of status codes 189

12.2 Errors 192

13 Technical data 193

13.1 Overview of technical data 193

13.2 SITRANS P DS III input ... 194
13.3 SITRANS P410 input ... 200
13.4 Output ... 202
13.5 Measuring accuracy of SITRANS P DS III ... 203
13.6 Measuring accuracy of SITRANS P410 ... 211
13.7 Operating conditions ... 214
13.8 Construction ... 218
13.9 Display, keyboard and auxiliary power ... 224
13.10 Certificates and approvals ... 225
13.11 PROFIBUS communication ... 227
14 Dimension drawings ... 229
14.1 SITRANS P, DS III/P410 for gauge pressure and absolute pressure from the gauge pressure series ... 229
14.2 SITRANS P DS III/P410 for differential pressure, flow rate and absolute pressure from the differential pressure series ... 231
14.3 SITRANS P DS III/P410 for level ... 234
14.4 SITRANS P DS III (flush-mounted) ... 235
14.4.1 Note 3A and EHDG ... 236
14.4.2 Connections as per EN and ASME ... 237
14.4.3 F&B and pharma flange ... 238
14.4.4 PMC Style ... 242
14.4.5 Special connections ... 243
15 Spare parts / accessories ... 245
15.1 Order data ... 245
15.2 Spare parts/accessories for SITRANS P DS III ... 245
15.3 Order data for SIMATIC PDM ... 247
15.4 Ordering data for PROFIBUS accessories ... 248
A Appendix ... 249
A.1 Certificate ... 249
A.2 Certificates (China) ... 249
A.3 Literature and standards ... 253
A.4 Technical support ... 254
B List of abbreviations/acronyms ... 255
B.1 Pressure transmitter ... 255
B.2 Functional safety ... 257
Glossary ... 259
Index ... 263

Introduction 1

1.1 Purpose of this documentation

These instructions contain all information required to commission and use the device. Read the instructions carefully prior to installation and commissioning. In order to use the device correctly, first review its principle of operation.

The instructions are aimed at persons mechanically installing the device, connecting it electronically, configuring the parameters and commissioning it, as well as service and maintenance engineers.

1.2 Product information

The programming manual is an integral part of the CD, which is either supplied or can be ordered. The programming manual is also available on the Siemens homepage.

On the CD, you will also find the catalog extract with the ordering data, the Software Device Install for SIMATIC PDM for additional installation, and the required software.

See also

Process instrumentation catalog (http://www.siemens.com/processinstrumentation/catalogs)

Product information on SITRANS P in the Internet (http://www.siemens.com/sitransp)

1.3 History

This history establishes the correlation between the current documentation and the valid firmware of the device.

The documentation of this edition applies to the following firmware:

Edition	Firmware identifier nameplate	System integration
12/2015	FW:300.01.08 FW:301.01.10 PROFIsafe FW:301.02.03 FW:301.02.04	SIMATIC PDM V8.x

The most important changes in the documentation when compared with the respective previous edition are given in the following table.

Edition	Remark
12/2015	All safety information has been revised. The following chapters have also been changed: • "Functional safety" chapter • "Technical data" chapter

1.4 Scope of the instructions

Table 1- 1 "7MF4.34.." stands for:

Order number	SITRANS P DS III/P410 for
7MF4034..	Gauge pressure
7MF4134..	Gauge pressure, flush mounted diaphragm
7MF4234..	Absolute pressure from the gauge pressure series
7MF4334..	Absolute pressure from the differential pressure series
7MF4434..	Differential pressure and flow rate, PN 32/160 (MAWP 464/2320 psi)
7MF4534..	Differential pressure and flow rate, PN 420 (MAWP 6092 psi)
7MF4634..	Level

1.5 Checking the consignment

1. Check the packaging and the delivered items for visible damage.
2. Report any claims for damages immediately to the shipping company.
3. Retain damaged parts for clarification.
4. Check the scope of delivery by comparing your order to the shipping documents for correctness and completeness.

⚠ WARNING

Using a damaged or incomplete device

Danger of explosion in hazardous areas.

- Do not use damaged or incomplete devices.

See also

Return procedure (Page 187)

1.6 Transportation and storage

To guarantee sufficient protection during transport and storage, observe the following:

- Keep the original packaging for subsequent transportation.
- Devices/replacement parts should be returned in their original packaging.
- If the original packaging is no longer available, ensure that all shipments are properly packaged to provide sufficient protection during transport. Siemens cannot assume liability for any costs associated with transportation damages.

CAUTION

Insufficient protection during storage

The packaging only provides limited protection against moisture and infiltration.

- Provide additional packaging as necessary.

Special conditions for storage and transportation of the device are listed in "Technical data" (Page 193).

1.7 Notes on warranty

The contents of this manual shall not become part of or modify any prior or existing agreement, commitment or legal relationship. The sales contract contains all obligations on the part of Siemens as well as the complete and solely applicable warranty conditions. Any statements regarding device versions described in the manual do not create new warranties or modify the existing warranty.

The content reflects the technical status at the time of publishing. Siemens reserves the right to make technical changes in the course of further development.

Safety information

2

2.1 Precondition for use

This device left the factory in good working condition. In order to maintain this status and to ensure safe operation of the device, observe these instructions and all the specifications relevant to safety.

Observe the information and symbols on the device. Do not remove any information or symbols from the device. Always keep the information and symbols in a completely legible state.

Symbol	Explanation
	Consult operating instructions

2.1.1 Laws and directives

Observe the test certification, provisions and laws applicable in your country during connection, assembly and operation. These include, for example:

- National Electrical Code (NEC - NFPA 70) (USA)
- Canadian Electrical Code (CEC) (Canada)

Further provisions for hazardous area applications are for example:

- IEC 60079-14 (international)
- EN 60079-14 (EC)

2.1.2 Conformity with European directives

The CE mark on the device is a sign of conformity with the following European directives:

Electromagnetic Compatibility EMC 2004/108/EC	Directive of the European Parliament and of the Council on the approximation of the laws of the Member States relating to electromagnetic compatibility and repealing Directive 89/336/EEC.
Atmosphère explosible ATEX 94/9/EC	Directive of the European Parliament and the Council on the approximation of the laws of the Member States concerning equipment and protective systems intended for use in potentially explosive atmospheres.
Pressure Equipment Directive PED 97/23/EC	Directive of the European Parliament and of the Council on the approximation of the laws of the Member States concerning pressure equipment.

The standards applied can be found in the EC declaration of conformity for the device.

2.2 Improper device modifications

WARNING

Improper device modifications

Danger to personnel, system and environment can result from modifications to the device, particularly in hazardous areas.

- Only carry out modifications that are described in the instructions for the device. Failure to observe this requirement cancels the manufacturer's warranty and the product approvals.

2.3 Requirements for special applications

Due to the large number of possible applications, each detail of the described device versions for each possible scenario during commissioning, operation, maintenance or operation in systems cannot be considered in the instructions. If you need additional information not covered by these instructions, contact your local Siemens office or company representative.

Note

Operation under special ambient conditions

We highly recommend that you contact your Siemens representative or our application department before you operate the device under special ambient conditions as can be encountered in nuclear power plants or when the device is used for research and development purposes.

2.4 Use in hazardous areas

Qualified personnel for hazardous area applications

Persons who install, connect, commission, operate, and service the device in a hazardous area must have the following specific qualifications:

- They are authorized, trained or instructed in operating and maintaining devices and systems according to the safety regulations for electrical circuits, high pressures, aggressive, and hazardous media.
- They are authorized, trained, or instructed in carrying out work on electrical circuits for hazardous systems.
- They are trained or instructed in maintenance and use of appropriate safety equipment according to the pertinent safety regulations.

⚠ WARNING

Unsuitable device for the hazardous area

Danger of explosion.

- Only use equipment that is approved for use in the intended hazardous area and labelled accordingly.

See also

Technical data (Page 193)

⚠ WARNING

Loss of safety of device with type of protection "Intrinsic safety Ex i"

If the device has already been operated in non-intrinsically safe circuits or the electrical specifications have not been observed, the safety of the device is no longer ensured for use in hazardous areas. There is a danger of explosion.

- Connect the device with type of protection "Intrinsic safety" solely to an intrinsically safe circuit.
- Observe the specifications for the electrical data on the certificate and/or in Chapter "Technical data (Page 193)".

2.4.1 Use of incorrect device parts in potentially explosive environments

⚠ WARNING

Use of incorrect device parts in potentially explosive environments

Devices and their associated device parts are either approved for different types of protection or they do not have explosion protection. There is a danger of explosion if device parts (such as covers) are used for devices with explosion protection that are not expressly suited for this type of protection. If you do not adhere to these guidelines, the test certificates and the manufacturer warranty will become null and void.

- Use only device parts that have been approved for the respective type of protection in the potentially explosive environment. Covers that are not suited for the "explosion-proof" type of protection are identified as such by a notice label attached to the inside of the cover with "Not Ex d Not SIL".
- Do not swap device parts unless the manufacturer specifically ensures compatibility of these parts.

⚠ WARNING

Risk of explosion due to electrostatic charge

To prevent the build-up of an electrostatic charge in a hazardous area, the key cover must be closed during operation and the screws tightened.

The key cover may be opened temporarily at any time for the purposes of operating the pressure transmitter, even during plant operation; the screws should then be tightened again.

2.4.2 Electrostatic-sensitive devices

NOTICE

Electrostatic-sensitive devices

The device contains electrostatic-sensitive devices (ESD). ESD can be destroyed by voltages far too low to be detected by humans. These voltages can occur if you simply touch a component part or the electrical connections of a module without being electrostatically discharged. The damage to a module caused by overvoltage cannot normally be detected immediately; it only becomes apparent after a longer period of operating time has elapsed.

Protective measures against the discharge of static electricity:

- Make sure that no power is applied.
- Before working with modules, make sure that you discharge static from your body, for example by touching a grounded object.
- Devices and tools used must be free of static charge.
- Hold modules only by their edges.
- Do not touch connector pins or conductor tracks on a module with the ESD notice.

Description

3

3.1 System configuration

Overview

The pressure transmitter can be used in a number of system configurations.

Use with the SIMATIC PCS 7 Automation System is described below.

System communication

The operator station of the SIMATIC PCS 7 process control system allows easy and safe control of the process by the operating personnel via OS clients.

The maintenance station assists the maintenance engineer in guaranteeing high plant availability, securing this long-term using optimization measures, and implementing the maintenance measures using a minimum of personnel, materials, energy, expenses, etc.

The field devices are integrated over PROFIBUS PA with:

- PA Link to the gateway between PROFIBUS PA and PROFIBUS DP
- Control system, e.g. SIMATIC PCS 7 Automation System, which communicates over PROFIBUS
- Engineering station, SIMATIC PDM (Process Device Manager) which communicates over Industrial Ethernet

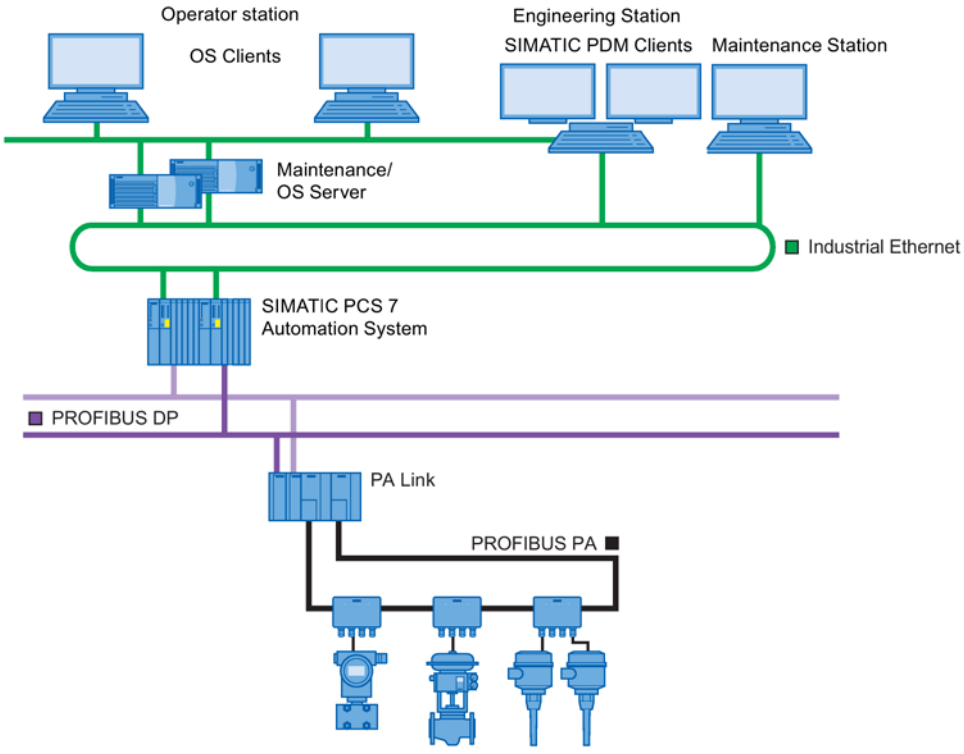

Image 3-1 Possible system configuration

3.2 Application

Overview

Depending on the variant, the pressure transmitter measures corrosive, non-corrosive and hazardous gases, vapors and liquids.

Depending on the device version, you can use the pressure transmitter for the following types of measurement:

- Gauge pressure
- Absolute pressure
- Differential pressure

With appropriate parameter settings and the necessary add-on parts (e.g. flow limiters and remote seals), the pressure transmitter can also be used for the following measurements:

- Level
- Volume
- Mass
- Volume flow
- Mass flow

The output signal is a process-based, digital PROFIBUS PA/FOUNDATION™ Fieldbus FF signal.

You can install the "intrinsically-safe" or "flameproof enclosure" version of the pressure transmitter in hazardous areas. The devices have an EC-Type Examination Certificate, and comply with the corresponding harmonized European directives of the CENELEC.

The pressure transmitter is available with various designs of the remote seal for special applications. A special application, for example, is the measurement of highly viscous materials.

Gauge pressure

This version measures the gauge pressure of corrosive, non-corrosive and toxic gases, vapors and liquids.

The smallest nominal measuring range is 0.01 bar g/1kPa g/14.5 psi g, the largest is 700 bar g/70 MPa g/10153 psi g.

Absolute pressure

This version measures the absolute pressure of corrosive, non-corrosive and toxic gases, vapors and liquids.

There are two series: A "Differential pressure" series and a "Gauge pressure" series. The "Differential pressure" series features a high overload capacity.

The smallest nominal measuring range of the "Differential pressure" series is 8.3 mbar a/0.83kPa/3.63 psi a, the largest is 100 bar a/10 MPa a/1450 psi a.

The smallest nominal measuring range of the "Gauge pressure" series is 8.3 mbar a/0.83kPa/3.63 psi a, the largest is 30 bar a/3 MPa/435 psi a.

Differential pressure and flow rate

This version measures corrosive, non-corrosive and toxic gases, vapors and liquids. You can use it for the following types of measurement:

- Differential pressure
- Gauge pressure, suitable for small positive or negative pressure value
- In combination with a primary element: flow rate q ~ $\sqrt{\Delta p}$

The smallest nominal measuring range is 20 mbar (8.03 in H_2O), the largest is 30 bar (435 psi).

Level

This version with mounting flange measures the level of non-corrosive, corrosive and toxic liquids in open and closed containers. The smallest nominal measuring range is 250 mbar (3.63 psi), the largest is 5 bar (72.5 psi). The nominal diameter of the mounting flange is DN 80 or DN 100, or 3" or 4".

For the level measurement on open containers, the low-pressure side of the measuring cell remains open. This measurement is referred to as "Measurement against atmospheric pressure". For the measurement on closed containers, the low-pressure side is usually connected to the container. This balances out the static pressure.

The parts wetted by the medium are made of various materials according to the corrosion resistance required.

3.3 SITRANS P DS III and SITRANS P410

SITRANS P DS III and SITRANS P410

These instructions describe the pressure transmitters SITRANS P DS III and SITRANS P410. The main difference of the SITRANS P410 is the higher measuring precision compared to the SITRANS P DS III. Refer to the information in the section Technical data (Page 193).

You order SITRANS P410 using the order option C41 for specific device versions.

3.4 Structure

Depending on a customer-specific order, the device comprises different parts.

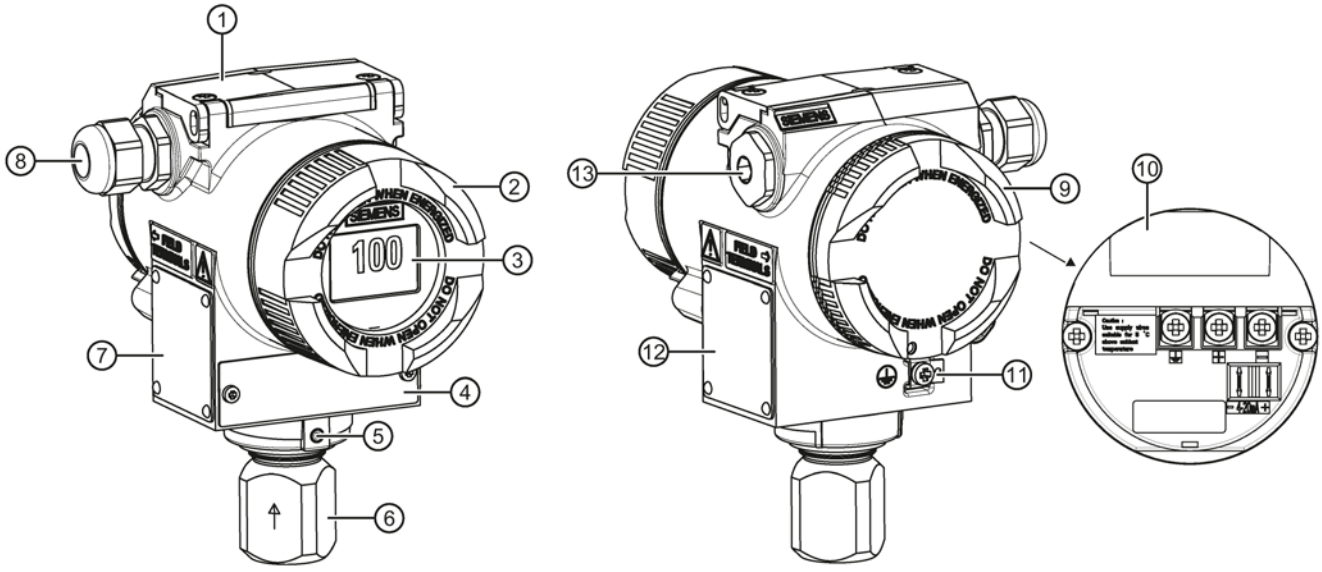

①	Key cover	⑧	Cable inlet, optionally with cable gland
②	Cover (front), optionally with inspection window	⑨	Cover (rear) for electrical terminal compartment
③	Display (optional)	⑩	Electrical terminal compartment
④	Measuring point label	⑪	Protective conductor connector/equipotential bonding terminal
⑤	Retaining screw; twist proofing of the measuring cell in relation to the electronics enclosure	⑫	Nameplate (approval information)
⑥	Process connection	⑬	Blanking plug
⑦	Nameplate (general information)		

Image 3-2 View of the pressure transmitter: Left: Front right: Rear view

- The electronics enclosure is made of die cast aluminum or precision cast stainless steel.
- The housing has a removable circular cover at the front and the back.
- Depending on the device version, the front cover ② may be designed as an inspection window. You can read the measured values straight off the digital display through this inspection window.
- The cable inlet ⑧ to the electrical terminal compartment is at the side; either the left or right-hand one can be used. The unused opening is closed with a blanking plug ⑬.
- The protective conductor terminal/equipotential bonding terminal ⑪ is located at the back of the enclosure.
- The electrical terminal compartment ⑩ for the auxiliary power and shield is accessible when you remove the back cover ⑨.
- The measuring cell with a process connection ⑥ is located in the lower section of the enclosure. This measuring cell is secured against twisting by a retaining screw ⑤. Thanks to the modular design of the pressure transmitter, the measuring cell and application electronics or connection board can be replaced if required.
- On the upper face of the enclosure you can see crosshead screws which secure the key cover ①, under which there are 3 keys for local operation.

3.5 Nameplate layout

Nameplate with general information

The label which bears the Order No. and other important information such as design details or technical data is present on the side of the housing.

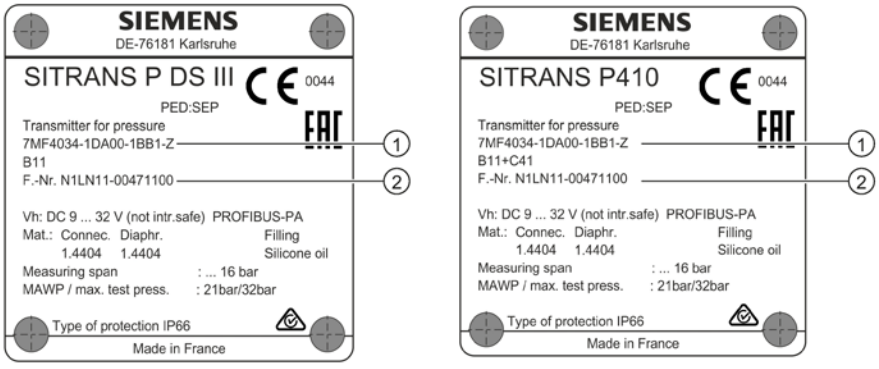

① Order number (machine-readable product code) ② Serial number

Nameplate with approval information

On the opposite side is the nameplate with approval information. This nameplate shows the firmware and hardware versions, for example. You must also observe the information in the relevant certificate for a pressure transmitter version for use in hazardous areas.

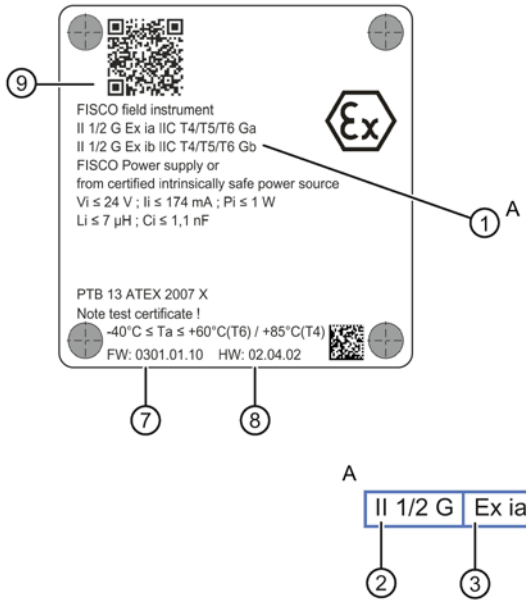

①	Characteristics of the hazardous area	⑤	Maximum surface temperature (temperature class)
②	Category of the operating range	⑥	Device protection level
③	Type of protection	⑦	Firmware identifier
④	Group (gas, dust)	⑧	Hardware identifier
⑨	QR code to the mobile website with device-specific information on the product	A	More detailed information on the characteristics ①

3.6 Measuring point label layout

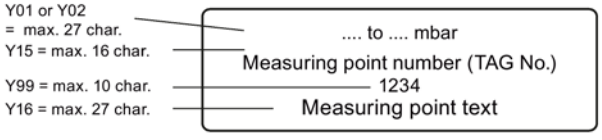

Image 3-3 Example of measuring point label

3.7 Principle of operation

3.7.1 Overview of mode of operation

This chapter describes how the pressure transmitter works.

First the electronics are described, and then the physical principle of the sensors which are used with the various device versions for the individual measurement types.

3.7.2 Operation of the electronics

Description

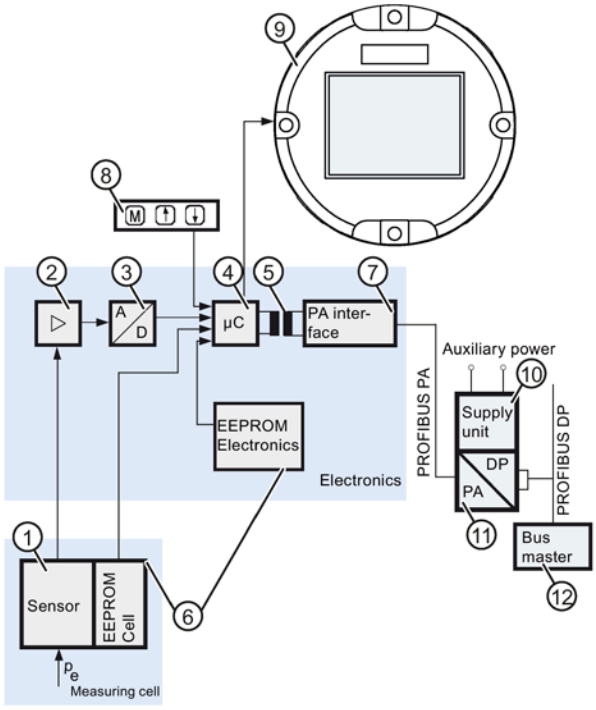

①	Measuring cell sensor	⑧	Buttons (local operation)
②	Measuring amplifier	⑨	Display
③	Analog-to-digital converter	⑩	Power supply
④	Microcontroller	⑪	DP/PA coupler or DP/PA link
⑤	Electrical isolation	⑫	Bus master
⑥	Each with an EEPROM in the measuring cell and in the electronics	p_e	Input variable
⑦	PROFIBUS PA interface		

Image 3-4 Principle of operation of the electronics with PA communication

Function

- The inlet pressure is converted into an electrical signal by the sensor ①.
- This signal is amplified by the measuring amplifier ② and digitized in an analog-to-digital converter ③.
- The digital signal is analyzed in a microcontroller ④ and corrected with regard to linearity and thermal characteristics.
- The signal is available at an electrically isolated PA interface ⑦ on the PROFIBUS PA.

- The data specific to the measuring cell, the electronics data, and the parameterization data are stored in two EEPROMs ⑥. The first memory is linked with the measuring cell, the second with the electronics.
- The results with the status values and diagnostics data are transmitted cyclically over the PROFIBUS PA. Parameterization data and error messages are transmitted acyclically by SIMATIC PDM.

Operation

- The buttons ⑧ can be used to call up individual functions, so-called modes.
- If you have a display ⑨, you can track the mode settings and other messages on it.

3.7.3 Principle of operation of the measuring cell

⚠WARNING

Destruction of the seal diaphragm

Danger of injury or damage to device

If the seal membrane is destroyed, the sensor may also be destroyed. If the seal membrane is destroyed, no reliable measured values can be output.

Hot, toxic and corrosive process media can be released.

- Ensure that the material of the device parts wetted by the process medium is suitable for the medium. Refer to the information in Technical data (Page 193).
- Make sure that the device is suitable for the maximum operating pressure of your system. Refer to the information on the nameplate and/or in Technical data (Page 193).
- Define maintenance intervals for regular inspections in line with device use and empirical values. The maintenance intervals will vary from site to site depending on corrosion resistance.

In the following sections, the process variable to be measured is called general inlet pressure.

Overview

The following modes of operation are described:

- Gauge pressure
- Absolute pressure
- Differential pressure and flow rate
- Level

The following process connections are available, for example:

- G1/2 B, 1/2-14 NPT
- Male thread: M20

- Flange connection in accordance with EN 61518
- Flush-mounted process connections

3.7.3.1 Measuring cell for gauge pressure

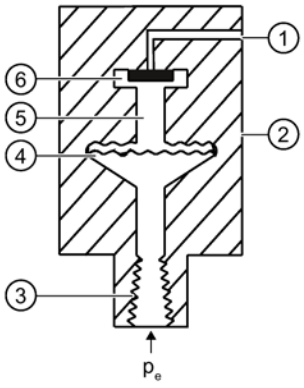

①	Reference pressure opening	⑤	Filling liquid
②	Measuring cell	⑥	Gauge pressure sensor
③	Process connection	p_e	Inlet pressure
④	Seal diaphragm		

Image 3-5 Function chart of measuring cell for gauge pressure

The inlet pressure (p_e) is transferred to the gauge pressure sensor ⑥ via the seal diaphragm ④ and the fill fluid ⑤, displacing its measuring diaphragm. The displacement changes the resistance of the four piezoresistors (bridge circuit) of the gauge pressure sensor. The change in the resistance causes a bridge output voltage proportional to the inlet pressure.

Pressure transmitters with spans ≤ 6.3 MPa measure the inlet pressure against atmosphere, those with spans ≥ 16 MPa the inlet pressure against vacuum.

3.7.3.2 Measuring cell for differential pressure and flow rate

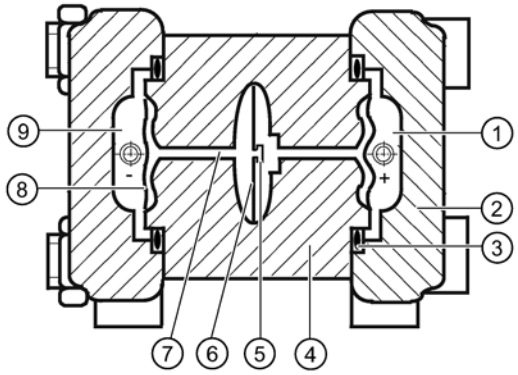

①	Inlet pressure P_+	⑥	Overload diaphragm
②	Pressure cap	⑦	Filling liquid
③	O-ring	⑧	Seal diaphragm
④	Measuring cell body	⑨	Inlet pressure P_-
⑤	Differential pressure sensor		

Image 3-6 Function chart of the measuring cell for differential pressure and flow rate

- Differential pressure is transmitted to the differential pressure sensor ⑤ through the seal diaphragms ⑧ and the filling liquid ⑦.
- When measuring limits are exceeded, the seal diaphragm ⑧ is displaced until the seal diaphragm rests on the measuring cell body ④. The differential pressure sensor ⑤ is thus protected against overloading since no further deflection of the overload diaphragm ⑥ is possible.
- The seal diaphragm ⑧ is displaced by the differential pressure. The displacement changes the resistance of the four piezoresistors (bridge circuit) of the differential pressure sensor.
- The change in the resistance causes a bridge output voltage proportional to the differential pressure.

3.7.3.3 Measuring cell for level

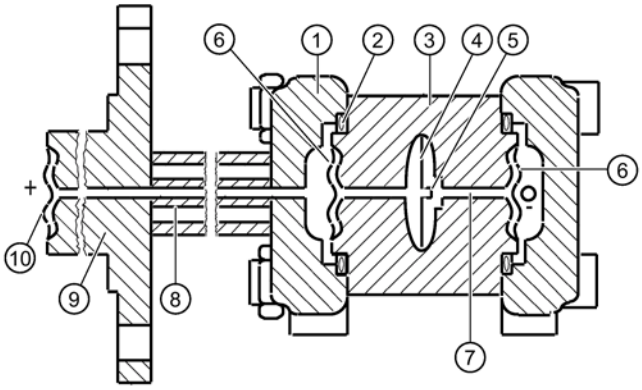

①	Pressure cap	⑥	Seal diaphragm on the measuring cell
②	O-ring	⑦	Filling liquid of the measuring cell
③	Measuring cell body	⑧	Capillary tube with the fill fluid of the mounting flange
④	Overload diaphragm	⑨	Flange with a tube
⑤	Differential pressure sensor	⑩	Seal diaphragm on the mounting flange

Image 3-7 Function chart of the measuring cell for level

- The inlet pressure (hydrostatic pressure) works hydraulically on the measuring cell through the seal diaphragm ⑩ on the mounting flange ⑩.
- Differential pressure at the measuring cell is transmitted to the differential pressure sensor ⑤ through the seal diaphragms ⑥ and the filling liquid ⑦.
- When measuring limits are exceeded, the overload diaphragm ④ is displaced until one of the seal diaphragms ⑥ or ⑩ rests on the measuring cell body ③. The seal diaphragms ⑥ thus protect the differential pressure sensor ⑤ from overload.
- The seal diaphragm ⑥ is displaced by the differential pressure. The displacement changes the resistance of the four doped piezoresistors in the bridge circuit.
- The change in the resistance causes a bridge output voltage proportional to the differential pressure.

3.7.3.4 Measuring cell for absolute pressure from the differential pressure series

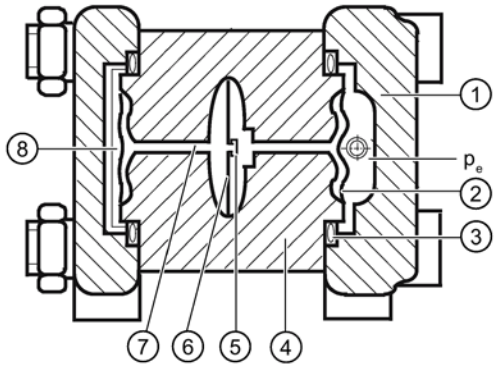

①	Pressure cap	⑥	Overload diaphragm
②	Seal diaphragm on the measuring cell	⑦	Measuring cell filling liquid
③	O-ring	⑧	Reference pressure
④	Measuring cell body	p_e	Pressure input variable
⑤	Absolute pressure sensor		

Image 3-8 Function chart of measuring cell for absolute pressure

- Absolute pressure is transmitted to the absolute pressure sensor ⑤ through the seal diaphragm ② and the filling liquid ⑦.
- When measuring limits are exceeded, the overload diaphragm ⑥ is displaced until the seal diaphragm ② rests on the measuring cell body ④. The seal diaphragm thus protects the absolute pressure sensor ⑤ from overload.
- The difference between the inlet pressure (p_e) and the reference pressure ⑧ on the negative side of the measuring cell displaces the seal diaphragm ②. The displacement changes the resistance of the four piezoresistors (bridge circuit) of the absolute pressure sensor.
- The change in the resistance causes a bridge output voltage proportional to the absolute pressure.

3.7.3.5 Measuring cell for absolute pressure from the gauge pressure series

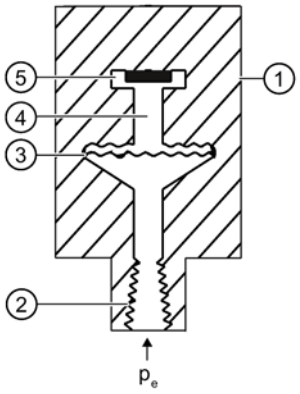

①	Measuring cell	④	Filling liquid
②	Process connection	⑤	Absolute pressure sensor
③	Seal diaphragm	P_e	Inlet pressure

Image 3-9 Function chart of measuring cell for absolute pressure

The inlet pressure (p_e) is transferred to the absolute pressure sensor ⑤ via the seal diaphragm ③ and the fill fluid ④, displacing its measuring diaphragm. The displacement changes the resistance of the four piezoresistors (bridge circuit) of the absolute pressure sensor. The change in the resistance causes a bridge output voltage proportional to the inlet pressure.

3.7.3.6 Measuring cell for gauge pressure, front-flush membrane

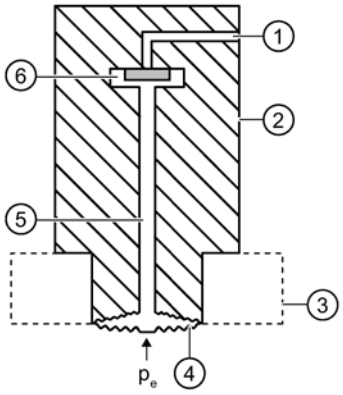

①	Reference pressure opening	⑤	Filling liquid
②	Measuring cell	⑥	Gauge pressure sensor
③	Process connection	p_e	Inlet pressure
④	Seal diaphragm		

Image 3-10 Function chart of the measuring cell for gauge pressure, flush mounted diaphragm

The inlet pressure (p_e) is transferred to the gauge pressure sensor ⑥ via the seal diaphragm ④ and the filling liquid ⑤, displacing its measuring diaphragm. The displacement changes

the resistance of the four piezoresistors (bridge circuit) of the gauge pressure sensor. The change in the resistance causes a bridge output voltage proportional to the inlet pressure.

Pressure transmitters with measuring span ≤ 63 bar measure the inlet pressure against atmosphere, those with measuring spans ≥ 160 bar the inlet pressure against vacuum.

3.7.3.7 Measuring cell for absolute pressure, front-flush membrane

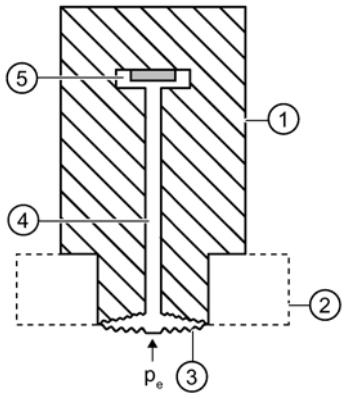

①	Measuring cell	④	Filling liquid
②	Process connection	⑤	Absolute pressure sensor
③	Seal diaphragm	p_e	Inlet pressure

Image 3-11 Function chart of the measuring cell for absolute pressure, flush mounted diaphragm

The inlet pressure (p_e) is transferred to the absolute pressure sensor ⑤ via the seal diaphragm ③ and the filling liquid ④, and displaces its measuring diaphragm. The displacement changes the resistance of the four piezoresistors (bridge circuit) of the absolute pressure sensor. The change in the resistance causes a bridge output voltage proportional to the inlet pressure.

3.8 Remote seal

Product description

- A remote seal measuring system comprises the following elements:
  - Remote seal
  - Transmission line, e.g. capillary line
  - Pressure transmitter.

  Note
  Malfunction of the remote seal measuring system

  If you separate the components of the remote seal measuring system, this results in malfunctioning of the system.

  Do not separate the components under any circumstances.

- The measuring system based on a hydraulic principle is used to transfer pressure.
- The capillary line and the remote seal diaphragm are the most sensitive components in the remote seal measuring system. The material thickness of the remote seal diaphragm is only ~ 0.1 mm.
- The smallest of leakages in the transmission system leads to the loss of transmission fluid.
- The loss of transmission fluid results in inaccuracies in the measurement and failure of the measuring system.
- In order to avoid leaks and measuring errors, please observe the installation and maintenance instructions in addition to the safety notes.

3.9 SIMATIC PDM

SIMATIC PDM is a software package for configuring, parameter assignment, commissioning, diagnostics and maintenance of this device and other process devices.

SIMATIC PDM offers simple monitoring of process values, alarms, and device status information.

SIMATIC PDM allows the process device data to be:

- displayed
- set
- modified
- saved
- diagnosed
- checked for plausibility

- managed
- simulated

3.10 PROFIBUS

The Process Fieldbus (PROFIBUS) is an open communications system for automation technology and is specified in the international standard IEC 61158.

PROFIBUS Process Automation (PROFIBUS PA) is a variant of PROFIBUS Decentral Peripherals (PROFIBUS DP), which is widely used in process technology.

3.10.1 Transmission technology

The PROFBUS PA has the special transmission technique MBP (Manchester coded Bus Powered) and therefore satisfies the requirements of process automation and process engineering requirements.

This transmission technology is defined in the international standard IEC 61158-2.

The PROFIBUS PA is based on the FISCO model (Fieldbus Intrinsically safe Concept) and can therefore be used in hazardous areas.

3.10.2 Bus topology

The bus topology is mainly able to be selected as desired. Therefore, line, star and tree structures, and mixed forms are possible. All types of field devices such as transmitters, actors, analysis devices, etc. can be connected to the PROFIBUS PA.

Advantages include:

- Savings on installation costs
- More extensive diagnostics, leading to increased availability of installation sections
- Automatic management of installation documentation
- Installation optimization on the fly during operation

In an automation system, there are generally multiple PROFIBUS PA lines connected to fast PROFIBUS DP via coupler units. This is also connected to the process control system.

Both bus systems use the same protocol layer. This makes PROFIBUS PA a "communications-compatible" extension of the PROFIBUS DP into the field.

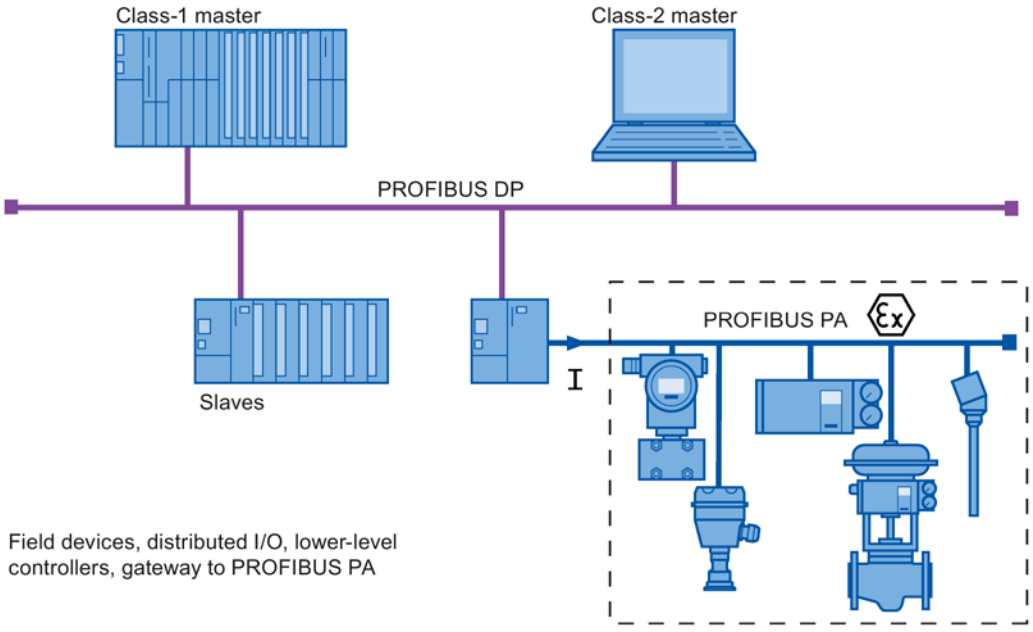

Image 3-12 Functional principle of the PROFIBUS automation system

The figure shows a section of a typical PROFIBUS automation system. The control system consists of two masters with distributed tasks.

The class-1 master recognizes the control and regulation tasks. The class-2 master enables the operating and monitoring functions. Between the class-1 master and the field devices there is a periodic exchange of measurement and settings data. The status information from the field devices is transmitted parallel to this data, and evaluated in the class-1 master. Assignment of parameters for the field devices or the reading of additional device information is not performed during periodic operation.

Besides periodic operation, one or more class-2 masters can access the field devices asynchronously. Using this type of communication, additional information can be retrieved from the devices or settings sent to them.

3.10.3 Properties

PROFIBUS PA allows bidirectional communication between a bus master and field devices. At the same time, the shielded two-strand wiring provides auxiliary power to the two-wire field devices.

Installing / mounting

4

4.1 Basic safety instructions

⚠ WARNING

Wetted parts unsuitable for the process media

Danger of injury or damage to device.

Hot, toxic and corrosive media could be released if the process medium is unsuitable for the wetted parts.

- Ensure that the material of the device parts wetted by the process medium is suitable for the medium. Refer to the information in "Technical data" (Page 193).

⚠ WARNING

Incorrect material for the diaphragm in Zone 0

Danger of explosion in the hazardous area. If operated with intrinsically safe supply devices of category "ib" or devices of the flameproof enclosure version "Ex d" and simultaneous use in Zone 0, pressure transmitter explosion protection depends on the tightness of the diaphragm.

- Ensure that the material used for the diaphragm is suitable for the process medium. Refer to the information in the section "Technical data (Page 193)".

⚠ WARNING

Unsuitable connecting parts

Danger of injury or poisoning.

In case of improper mounting hot, toxic and corrosive process media could be released at the connections.

- Ensure that connecting parts (such as flange gaskets and bolts) are suitable for connection and process media.

Note

Material compatibility

Siemens can provide you with support concerning selection of sensor components wetted by process media. However, you are responsible for the selection of components. Siemens accepts no liability for faults or failures resulting from incompatible materials.

⚠ WARNING

Exceeded maximum permissible operating pressure

Danger of injury or poisoning.

The maximum permissible operating pressure depends on the device version. The device can be damaged if the operating pressure is exceeded. Hot, toxic and corrosive process media could be released.

- Make sure that the device is suitable for the maximum permissible operating pressure of your system. Refer to the information on the nameplate and/or in "Technical data (Page 193)".

⚠ WARNING

Exceeded maximum ambient or process media temperature

Danger of explosion in hazardous areas.

Device damage.

- Make sure that the maximum permissible ambient and process media temperatures of the device are not exceeded. Refer to the information in Chapter "Technical data (Page 193)".

⚠ WARNING

Open cable inlet or incorrect cable gland

Danger of explosion in hazardous areas.

- Close the cable inlets for the electrical connections. Only use cable glands or plugs which are approved for the relevant type of protection.

⚠ WARNING

Incorrect conduit system

Danger of explosion in hazardous areas as result of open cable inlet or incorrect conduit system.

- In the case of a conduit system, mount a spark barrier at a defined distance from the device input. Observe national regulations and the requirements stated in the relevant approvals.

See also

Technical data (Page 193)

WARNING

Incorrect mounting at Zone 0

Danger of explosion in hazardous areas.

- Ensure sufficient tightness at the process connection.
- Observe the standard IEC/EN 60079-14.

WARNING

Danger with "flameproof enclosure" protection

Danger of explosion in hazardous areas. An explosion may be caused by hot gas escaping from the flameproof enclosure if there is too little space between it and the fixed parts.

- Ensure that there is a space of at least 40 mm between the flameproof joint and the fixed parts.

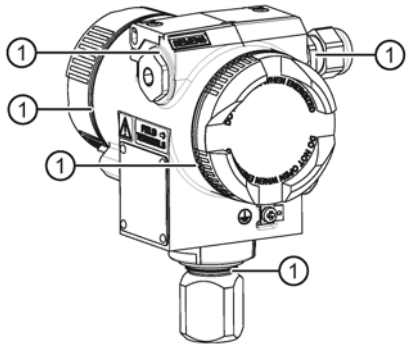

① Flameproof joint

WARNING

Loss of explosion protection

Danger of explosion in hazardous areas if the device is open or not properly closed.

- Close the device as described in Chapter "PROFIBUS assembly guidelines (Page 66)".

⚠ WARNING

Use of incorrect device parts in potentially explosive environments

Devices and their associated device parts are either approved for different types of protection or they do not have explosion protection. There is a danger of explosion if device parts (such as covers) are used for devices with explosion protection that are not expressly suited for this type of protection. If you do not adhere to these guidelines, the test certificates and the manufacturer warranty will become null and void.

- Use only device parts that have been approved for the respective type of protection in the potentially explosive environment. Covers that are not suited for the "explosion-proof" type of protection are identified as such by a notice label attached to the inside of the cover with "Not Ex d Not SIL".
- Do not swap device parts unless the manufacturer specifically ensures compatibility of these parts.

⚠ CAUTION

Hot surfaces resulting from hot process media

Danger of burns resulting from surface temperatures above 70 °C (155 °F).

- Take appropriate protective measures, for example contact protection.
- Make sure that protective measures do not cause the maximum permissible ambient temperature to be exceeded. Refer to the information in Chapter "Technical data (Page 193)".

⚠ CAUTION

External stresses and loads

Damage to device by severe external stresses and loads (e.g. thermal expansion or pipe tension). Process media can be released.

- Prevent severe external stresses and loads from acting on the device.

4.1.1 Installation location requirements

⚠ WARNING

Insufficient air supply

The device may overheat if there is an insufficient supply of air.

- Install the device so that there is sufficient air supply in the room.
- Observe the maximum permissible ambient temperature. Refer to the information in the section "Technical data (Page 193)".

⚠ CAUTION

Aggressive atmospheres

Damage to device through penetration of aggressive vapors.

- Ensure that the device is suitable for the application.

NOTICE

Direct sunlight

Increased measuring errors.

- Protect the device from direct sunlight.

Make sure that the maximum ambient temperature is not exceeded. Refer to the information in the section Technical data (Page 193).

4.1.2 Proper mounting

NOTICE

Incorrect mounting

The device can be damaged, destroyed, or its functionality impaired through improper mounting.

- Before installing ensure there is no visible damage to the device.
- Make sure that process connectors are clean, and suitable gaskets and glands are used.
- Mount the device using suitable tools. Refer to the information in Technical data (Page 193) for installation torque requirements.

CAUTION

Loss of degree of protection

Damage to device if the enclosure is open or not properly closed. The degree of protection specified on the nameplate or in Chapter "Technical data (Page 193)" is no longer guaranteed.

- Make sure that the device is securely closed.

See also

PROFIBUS assembly guidelines (Page 66)

4.2 Disassembly

4.2.1 Incorrect disassembly

WARNING

Incorrect disassembly

The following dangers may result through incorrect disassembly:

- Injury through electric shock

- Danger through emerging media when connected to the process

- Danger of explosion in hazardous area

In order to disassemble correctly, observe the following:

- Before starting work, make sure that you have switched off all physical variables such as pressure, temperature, electricity etc. or that they have a harmless value.
- If the device contains dangerous media, it must be emptied prior to disassembly. Make sure that no environmentally hazardous media are released.
- Secure the remaining connections so that no damage can result if the process is started unintentionally.

4.3 Installation (except level)

4.3.1 Installation mounting (except for level)

Requirements

Note

Compare the desired operating data with the data on the nameplate.

Please also refer to the information on the remote seal if this is fitted.

Note

Protect the pressure transmitter from:

- Direct heat radiation
- Rapid temperature fluctuations
- Heavy contamination
- Mechanical damage
- Direct sunlight

Note

The housing may only be opened for maintenance, local operation or to make electrical connections.

The installation location is to be as follows:

- Easily accessible
- As close as possible to the measuring point
- Vibration-free
- Within the permitted ambient temperature values

Installation configuration

The pressure transmitter may in principle be configured above or below the pressure tapping point. The recommended configuration depends on the medium.

Installation configuration for gases

Install the pressure transmitter above the pressure tapping point.

Lay the pressure tubing with a constant gradient to the pressure tapping point, so that any condensate produced can drain in the main line and thereby avoid corruption of the measured values.

Installation configuration for vapor and liquid

Install the pressure transmitter below the pressure tapping point.

Lay the pressure tubing with a constant gradient to the pressure tapping point so that any gas pockets can escape in the main line.

4.3.2 Installation (except level)

Note

Damage to measuring cell

When installing the process connection of the pressure transmitter, do not rotate the housing. Rotating the housing may damage the measuring cell.

To avoid damage to the device, tighten the threaded nuts of the measuring cell using a wrench.

Procedure

Attach the pressure transmitter to the process connection with an appropriate tool.

4.3.3 Fastening

Fastening without the mounting bracket

You can fasten the pressure transmitter directly to the process connection.

Fastening with the mounting bracket

You can fasten the mounting bracket as follows:

- On a wall or a mounting frame using two screws
- On a vertical or horizontal mounting tube (Ø 50 to 60 mm) using a tube bracket

Fasten the pressure transmitter mounting bracket using the two screws provided.

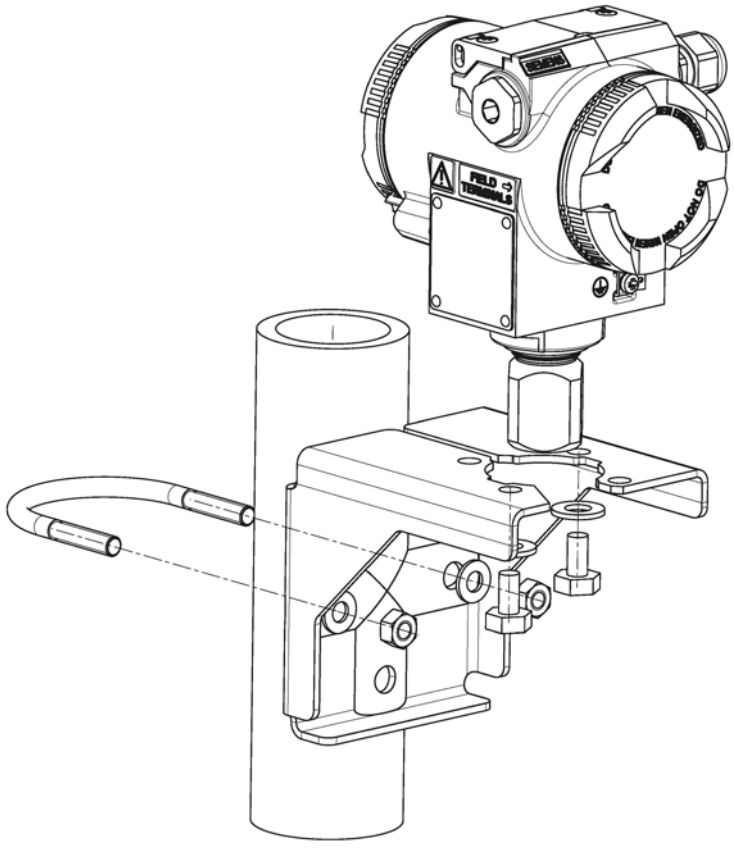

Image 4-1 Fastening the pressure transmitter on the mounting bracket

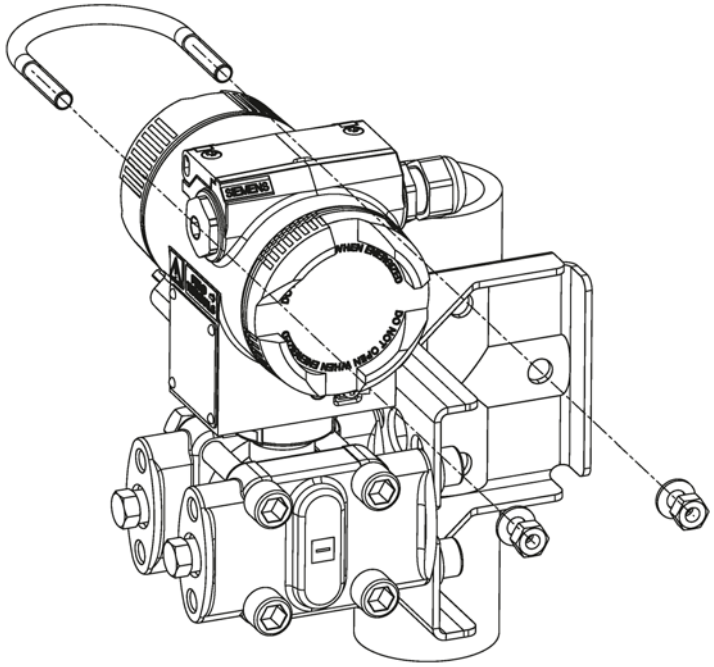

Image 4-2 An example of fastening the pressure transmitter on the mounting bracket in the case of differential pressure and horizontal differential pressure lines

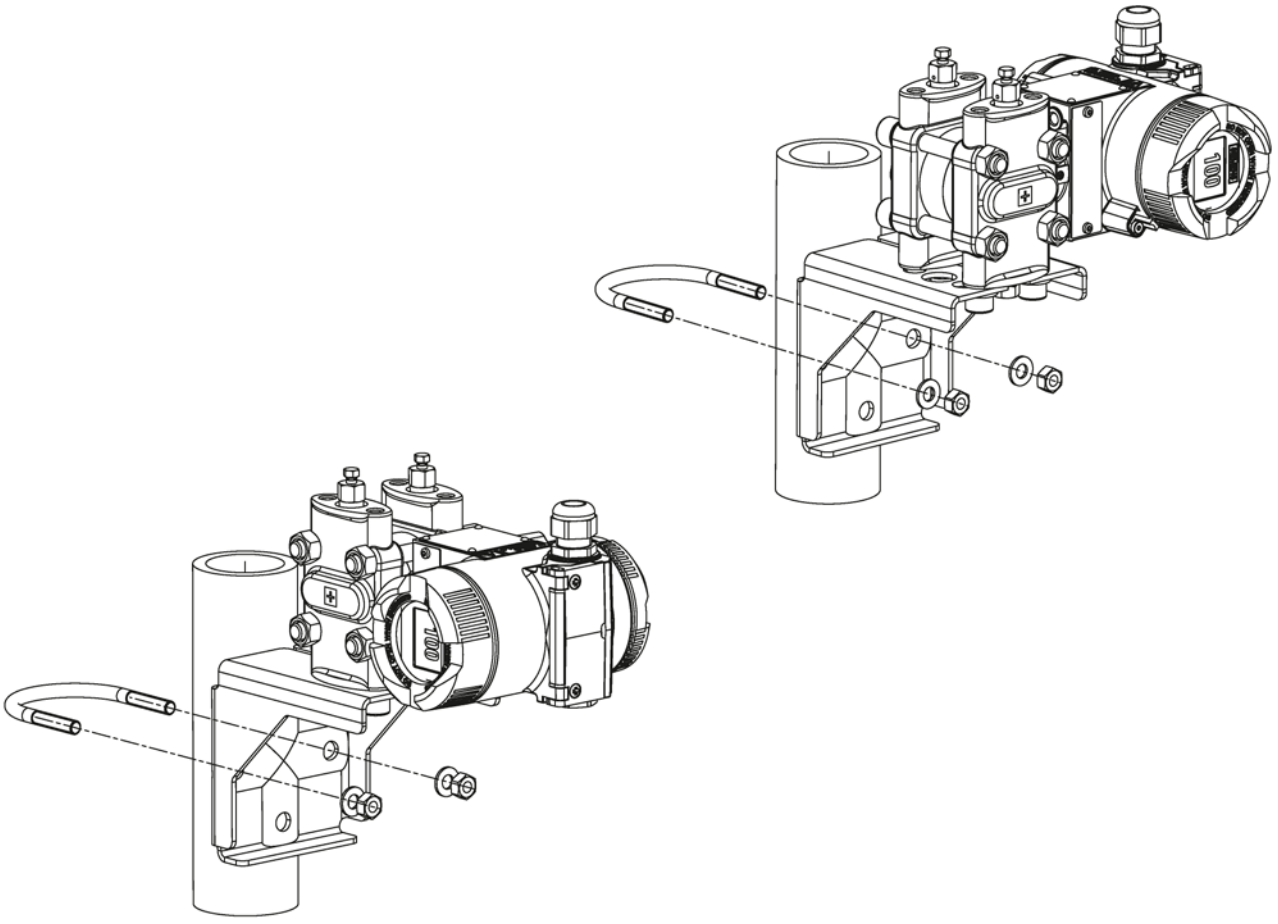

Image 4-3 An example of fastening on the mounting bracket in the case of differential pressure and vertical differential pressure lines

4.4 "Level" installation

4.4.1 Instructions for level installation

Requirements

Note

Compare the desired operating data with the data on the nameplate.

Please also refer to the information on the remote seal if this is fitted.

Note

Protect the pressure transmitter from:

- Direct thermal radiation
- Rapid temperature fluctuations
- Severe soiling
- Mechanical damage
- Direct sunlight

Note

Select the height of the mounting flange such that the pressure transmitter is always mounted below the lowest fill height to be measured.

The installation location is to be as follows:

- Easily accessible
- The measuring point must be as close as possible
- Vibration-free
- Within the permitted ambient temperature values

4.4.2 Installation for level

Note

Seals are required for the installation. The seals must be compatible with the medium to be measured.

Seals are not included in the delivery.

Procedure

To install the pressure transmitter for level, proceed as follows:

1. Attach the seal to the container's mating flange.

   Ensure that the seal is centrically positioned and that it does not restrict the movement of the flange's seal diaphragm in any way as otherwise the tightness of the process connection is not guaranteed.

2. Screw on the pressure transmitter's flange.
3. Observe the installation position.

4.4.3 Connection of the negative pressure line

Assembly on an open container

A line is not required when taking measurements in an open container since the negative chamber is connected with the atmosphere.

Ensure that no dirt enters the open connection ports, for example by using connection screws with a 7MF4997-1CP bleed valve.

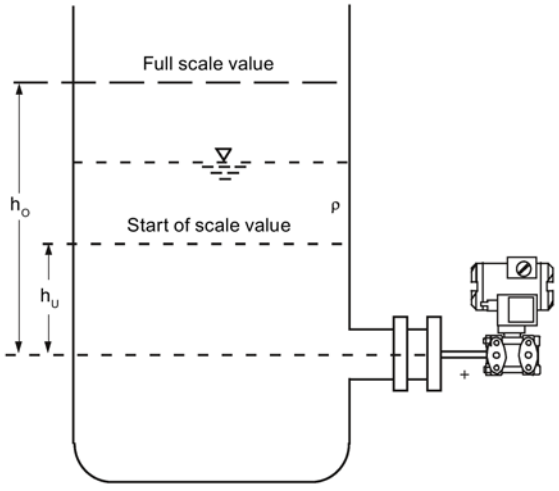

Measurement assembly on an open container

Formula:

Start of scale value: $p_{MA} = \rho \cdot g \cdot h_U$

Full-scale value: $p_{ME} = \rho \cdot g \cdot h_O$

h_U	Lower filling level	Δp_{MA}	Start of scale value
h_O	Upper filling level	Δp_{ME}	Full-scale value
p	Pressure	ρ	Density of the measured medium in the container
		g	Acceleration due to gravity

Assembly on a closed container

When taking measurements in a closed container without or with little condensate formation, the negative pressure line is not filled. Lay the line in such a way that pockets of condensate do not form. Install a condensation container if required.

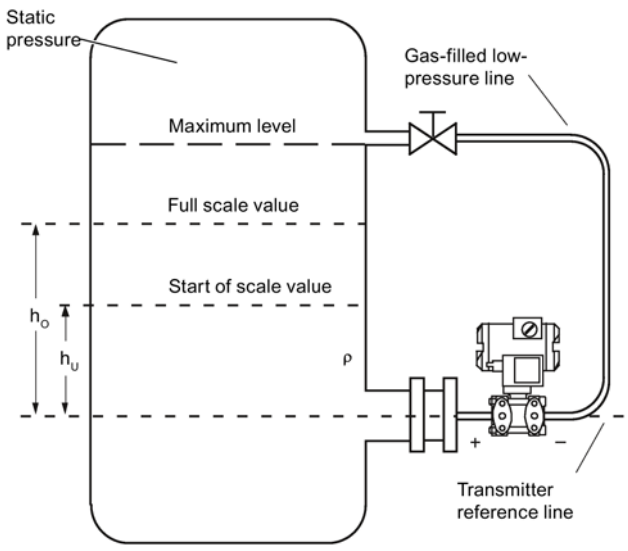

Measurement assembly on a closed container (no or little condensate separation)

Formula:

Start-of-scale value: $\Delta p_{MA} = \rho \cdot g \cdot h_U$

Full-scale value: $\Delta p_{ME} = \rho \cdot g \cdot h_O$

h_U	Lower filling level	Δp_{MA}	Start of scale value
h_O	Upper filling level	Δp_{ME}	Full-scale value
p	Pressure	ρ	Density of the measured medium in the container
		g	Acceleration due to gravity

When taking measurements in a closed container with strong condensate formation, you must fill the negative pressure line (mostly with the condensate of the measured medium) and install a condensate pot. You can cut off the device using the dual pneumatic block 7MF9001-2.

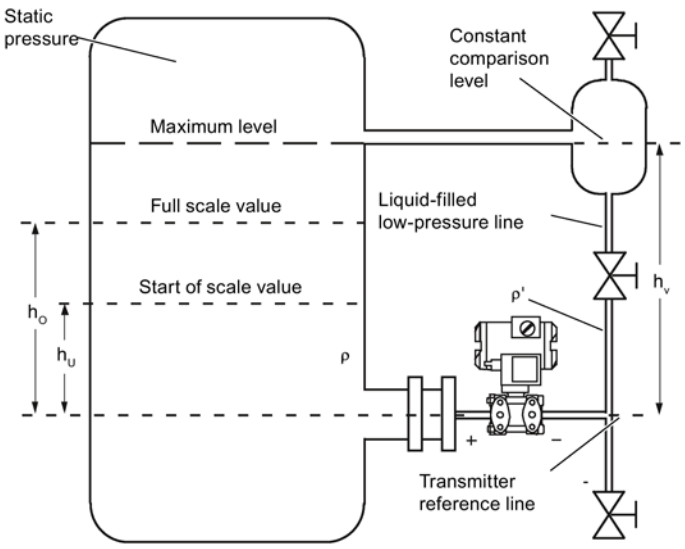

Formula:

Start-of-scale value:
$\Delta p_{MA} = g \cdot (h_U \cdot \rho - h_V \cdot \rho')$

Full-scale value:
$\Delta p_{MA} = g \cdot (h_O \cdot \rho - h_V \cdot \rho')$

Measurement assembly on a closed container (strong condensate formation)

h_U	Lower filling level	Δp_{MA}	Start of scale value
h_O	Upper filling level	Δp_{ME}	Full-scale value
h_V	Gland distance	ρ	Density of the measured medium in the container
p	Pressure	ρ '	Density of fluid in the negative pressure line corresponds to the prevailing temperature there
		g	Acceleration due to gravity

The process connection on the negative side is a female thread $^1/_4$-18 NPT or an oval flange.

Lay the line for the negative pressure using a seamless steel tube 12 mm x 1.5 mm.

4.5 "Remote seal" installation

4.5.1 Remote seal installation

General installation instructions

- Keep the measuring system in the factory packing until it is installed in order to protect it from mechanical damage.
- When removing from the factory packing and installing: ensure that damage to and mechanical deformations in the membrane are prevented.
- Never loosen the sealed filling screws on the remote seal and the measuring instrument.
- Do not cause damage to the remote separating membrane; scratches on the remote separating membrane, e.g. due to sharp-edged objects, are the main starting points for corrosion.
- Select suitable gaskets for sealing.
- Use a gasket having an adequately large inner diameter for flanging. Insert the gasket concentrically; contact with the membrane leads to deviations in measurements.
- When using gaskets made of soft materials or PTFE: follow the guidelines of the gasket manufacturer, especially regarding the tightening torque and setting cycles.
- At the time of installation, use suitable fastening components such as screws and nuts that are compliant with fitting and flange standards.
- Excessive tightening of screwed joints on the process connection may displace the zero point on the pressure transmitter.

Note

Commissioning

If a shut-off valve exists, open the shut-off valve slowly when commissioning in order to avoid pressure surges.

Note

Permissible ambient and operating temperatures

Install the pressure measuring device such that the permissible limits of ambient and measured medium temperatures are not overshot or undershot even with the consideration of the effect of convection and heat radiation.

- Note the effect of temperature on the measuring accuracy.
- When selecting the remote seals, ensure that fittings and flange components have adequate pressure-temperature resistance by selecting suitable materials and pressure ratings. The pressure rating specified on the remote seal applies to reference conditions according to IEC 60770.
- For the maximum permissible pressure at higher temperatures, please refer to the standard specified on the remote seal.

Using remote seals with pressure measuring device for hazardous areas:

- When using remote seals with pressure measuring device for hazardous areas, the permissible limits of ambient temperatures for the pressure transmitter must not be exceeded. Hot surfaces on the cooling section (capillaries or cooling elements) are a possible source of ignition. Initiate suitable measures.
- When remote seals with a flame arrestor are used, the pressure measuring instrument determines the permissible ambient temperature. In the case of potentially explosive gaseous atmosphere, the temperature around the flame arrestor must not exceed +60 °C.

4.5.2 Installation of the remote seal with the capillary line

Notes

- Do not transport the measuring assembly (pressure transmitters, flange and capillary) using the capillary line.
- Do not bend capillary lines; risk of leakages and/or risk of considerable increase in the setting time of the measuring system.
- Owing to the risk of bending and breakages, pay attention to mechanical overloads at the joints such as capillary line-remote seal and capillary line-measuring device.
- Unwinding the excess capillary lines with a radius of at least 150 mm.
- Fasten the capillary line such that there are no vibrations.
- Permissible height differences:
  - When installing the pressure measuring device above the measuring point, keep the following in mind: In the case of remote seal measuring systems with silicon, glycerin or paraffin oil filling, the height difference of $H_{1max.}$ = 7 m must not be exceeded.
  - If halocarbon oil is used as a fill fluid, this maximum height difference is only $H_{1max.}$ = 4 m; see installation type A and installation type B.

If negative overpressure is observed during measurements, reduce the permissible height difference accordingly.

Installation type for gauge pressure and level measurements (open containers)

Installation type A

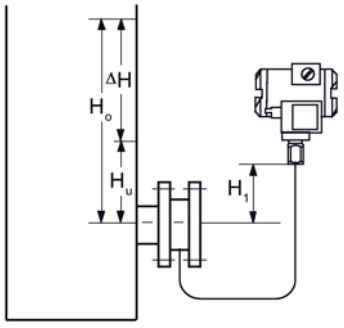

Pressure transmitter above the measuring point

Start of scale value:
$p_{MA} = \rho_{FL} * g * H_U + \rho_{oil} * g * H_1$
Full-scale value:
$p_{ME} = \rho_{FL} * g * H_O + \rho_{oil} * g * H_1$

Installation type B

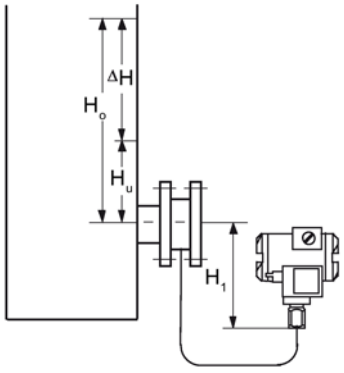

Pressure transmitter below the measuring point

Start of scale value:
$p_{MA} = \rho_{FL} * g * H_U - \rho_{oil} * g * H_1$
Full-scale value:
$p_{ME} = \rho_{FL} * g * H_O - \rho_{oil} * g * H_1$

$H_1 \leq 7$ m (23 ft); with halocarbon oil as the filling liquid, only $H_1 \leq 4$ m(13.1 ft)

Key

p_{MA}	Start of scale value
p_{ME}	Full-scale value
ρ_{FL}	Density of the process medium in the container
ρ_{oil}	Density of the filling oil in the capillary line of the remote seal
g	Acceleration due to gravity
H_U	Lower filling level
H_O	Upper filling level
H_1	Distance between the container flange and the pressure transmitter

For absolute pressure measurements (vacuum), install the measuring device at least at the height of the remote seal or below it (see installation types C).

Installation types for absolute pressure measurements (closed containers)

Installation type C_1

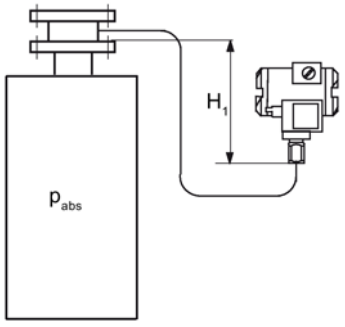

Start of scale value:
$p_{MA} = p_{start} + \rho_{oil} * g * H_1$
Full-scale value:
$p_{ME} = p_{end} + \rho_{oil} * g * H_1$

Installation type C_2

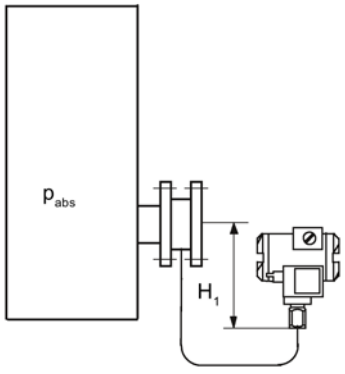

Pressure transmitter for absolute pressure always below the measuring point: $H_1 \geq 200$ mm (7.9 inch)

Key

p_{MA}	Start of scale value
p_{ME}	Full-scale value
p_{start}	Start of scale pressure
p_{end}	Full scale pressure
ρ_{oil}	Density of the filling oil in the capillary line of the remote seal
g	Acceleration due to gravity
H_1	Distance between the container flange and the pressure transmitter

Note

Effects of temperature

Keep the following instructions in mind in order to minimize keep the effects of temperature in remote seal measuring systems with the differential pressure measuring device:

Install the device such that the positive and negative sides are symmetrical as far as ambient effects, especially ambient temperatures, are concerned.

Installation type for differential pressure and flow rate measurements

Installation type D

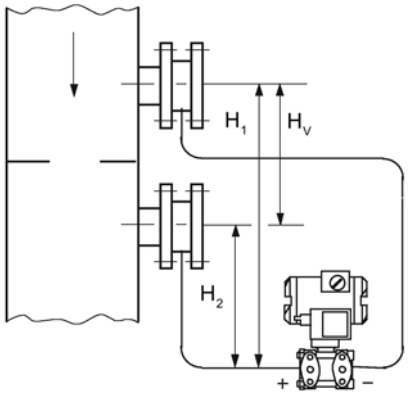

Start of scale value:
$p_{MA} = p_{start} - \rho_{oil} * g * H_V$
Full-scale value:
$p_{ME} = p_{end} - \rho_{oil} * g * H_V$

Key

p_{MA}	Start of scale value
p_{ME}	Full-scale value
p_{start}	Start of scale pressure
p_{end}	Full scale pressure
ρ_{oil}	Density of the filling oil in the capillary line of the remote seal
g	Acceleration due to gravity
H_V	Gland distance

Installation types for level measurements (closed containers)

Installation type E

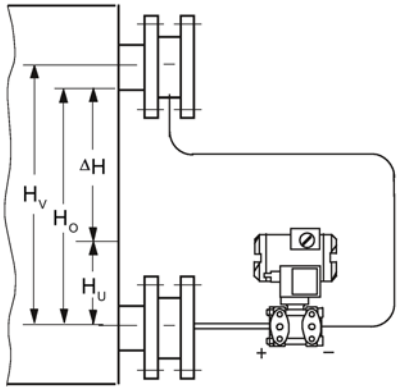

Start of scale value:
$p_{MA} = \rho_{FL} * g * H_U - \rho_{oil} * g * H_V$
Full-scale value:
$p_{ME} = \rho_{FL} * g * H_U - \rho_{oil} * g * H_V$

Key

p_{MA}	Start of scale value
p_{ME}	Full-scale value
ρ_{FL}	Density of the process medium in the container
ρ_{oil}	Density of the filling oil in the capillary line of the remote seal
g	Acceleration due to gravity
H_U	Lower filling level
H_O	Upper filling level
H_V	Gland distance

Installation type G

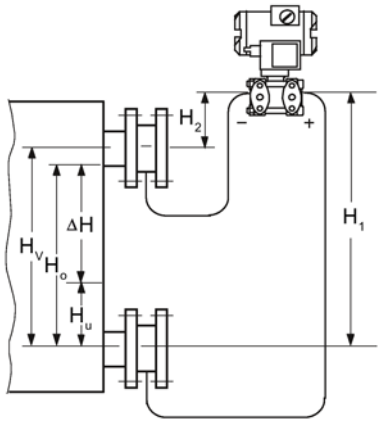

Pressure transmitter for differential pressure above the upper measuring point, no vacuum

$H_1 \leq 7$ m (23 ft), for halocarbon oil, however only H1 ≤ 4 m (13.1 ft)

Start of scale value:

$p_{MA} = \rho_{FL} * g * H_U - \rho_{oil} * g * H_V$

Full-scale value:

$p_{ME} = \rho_{FL} * g * H_O - \rho_{oil} * g * H_V$

Installation type H

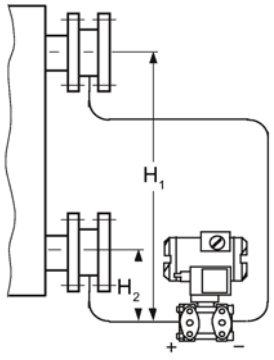

Below the lower measuring point

Start of scale value:

$p_{MA} = \rho_{FL} * g * H_U - \rho_{oil} * g * H_V$

Full-scale value:

$p_{ME} = \rho_{FL} * g * H_O - \rho_{oil} * g * H_V$

Installation type J

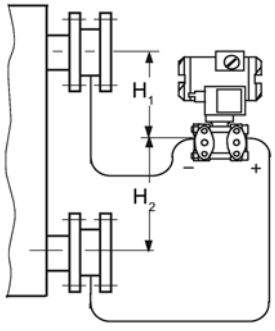

Between the measuring points, no vacuum

$H_2 \leq 7$ m (23 ft); with halocarbon oil as the filling liquid, only $H_2 \leq 4$ m(13.1 ft)

Start of scale value:

$p_{MA} = \rho_{FL} * g * H_U - \rho_{oil} * g * H_V$

Full-scale value:

$p_{ME} = \rho_{FL} * g * H_O - \rho_{oil} * g * H_V$

Key

p_{MA}	Start of scale value
p_{ME}	Full-scale value
ρ_{FL}	Density of the process medium in the container
ρ_{oil}	Density of the filling oil in the capillary line of the remote seal
g	Acceleration due to gravity
H_U	Lower filling level
H_O	Upper filling level
H_V	Gland distance

4.6 Turing the measuring cell against housing

Description

You can turn the measuring cell against the housing. Rotating the pressure transmitter facilitates its operation when it is installed at an angle, for example. The buttons and the current connection can thus also be operated for an external measuring device. The display also remains visible in enclosure covers with an inspection window.

Only limited turning is permissible! The turning range ① is marked at the foot of the electronic housing. An orientation mark ③ is provided at the throat of the measuring cell. This mark must remain in the marked section when turning.

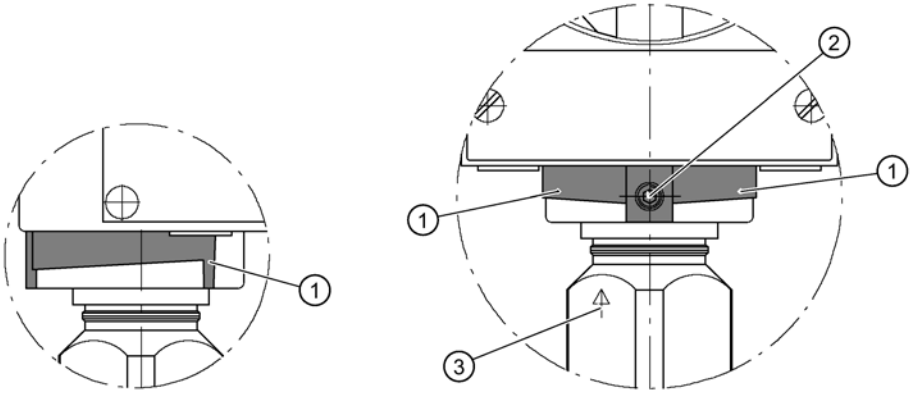

① Turning range
② Retaining screw
③ Orientation mark

Image 4-4 Example: Turning range of pressure transmitters for pressure and absolute pressure from the gauge pressure series

The turning range for pressure transmitters for differential pressure and flow rate, absolute pressure from the differential pressure series and level is identified in a similar manner.

Procedure

NOTICE
Damage to the ribbon cable
If the pressure transmitter enclosure is rotated against the measuring cell, this can damage the ribbon cable (sensor connection to the electronics). • Comply with the specified range of rotation ① as detailed.

1. Loosen the retaining screw ② (Allen screw 2.5 mm).
2. Turn the electronic housing against the measuring cell. Follow the marked turning range ① while doing so.
3. Tighten the retaining screw (torque: 3.4 to 3.6 Nm).

4.7 Rotating the display

You can rotate the display in the electronics enclosure. This makes it easier to read the display if the device is not being operated in a vertical position.

Procedure

1. Unscrew the cover of the electrical cable compartment. See section Structure (Page 24). An identification text "FIELD TERMINAL" is provided at the side of the housing.
2. Unscrew the display. Depending on the application position of the pressure transmitter, you can reinstall it at four different positions. You can turn it by ±90° or ±180°.
3. Screw the covers back on as far as they will go.
4. Secure the covers with the cover catch.

Connecting up

5

5.1 Basic safety instructions

⚠ WARNING

Unsuitable cables and/or cable glands

Danger of explosion in hazardous areas.

- Only use suitable cables and cable glands complying with the requirements specified in Chapter "Technical data (Page 193)".
- Tighten the cable glands in accordance with the torques specified in Chapter "Technical data (Page 193)".
- When replacing cable glands use only cable glands of the same type.
- After installation check that the cables are seated firmly.

5.1.1 Hazardous contact voltage in versions with 4-conductor extension

⚠ WARNING

Hazardous contact voltage in versions with 4-conductor extension

Danger of electrocution in case of incorrect connection.

- Observe the instructions in the 4-conductor extension operating manual for the electrical connection.

⚠ WARNING

Improper power supply

Danger of explosion in hazardous areas as result of incorrect power supply, e.g. using direct current instead of alternating current.

- Connect the device in accordance with the specified power supply and signal circuits. The relevant specifications can be found in the certificates, in Chapter "Technical data (Page 193)" or on the nameplate.

⚠ WARNING

Unsafe extra-low voltage

Danger of explosion in hazardous areas due to voltage flashover.

- Connect the device to an extra-low voltage with safe isolation (SELV).

⚠ WARNING

Lack of equipotential bonding

Danger of explosion through compensating currents or ignition currents through lack of equipotential bonding.

- Ensure that the device is potentially equalized.

Exception: It may be permissible to omit connection of the equipotential bonding for devices with type of protection "Intrinsic safety Ex i".

⚠ WARNING

Unprotected cable ends

Danger of explosion through unprotected cable ends in hazardous areas.

- Protect unused cable ends in accordance with IEC/EN 60079-14.

⚠ WARNING

Improper laying of shielded cables

Danger of explosion through compensating currents between hazardous area and the non-hazardous area.

- Only ground shielded cables that run into the hazardous area at one end.
- If grounding is required at both ends, use an equipotential bonding conductor.

⚠ WARNING

Connecting device in energized state

Danger of explosion in hazardous areas.

- Connect devices in hazardous areas only in a de-energized state.

Exceptions:

- Circuits of limited energy may also be connected in the energized state in hazardous areas.
- Exceptions for type of protection "Non-sparking nA" (Zone 2) are regulated in the relevant certificate

⚠ WARNING

Incorrect selection of type of protection

Danger of explosion in areas subject to explosion hazard.

This device is approved for several types of protection.

1. Decide in favor of one type of protection.
2. Connect the device in accordance with the selected type of protection.
3. In order to avoid incorrect use at a later point, make the types of protection that are not used permanently unrecognizable on the nameplate.

NOTICE

Ambient temperature too high

Damage to cable sheath.

- At an ambient temperature ≥ 60 °C (140 °F), use heat-resistant cables suitable for an ambient temperature at least 20 °C (36 °F) higher.

5.1.2 Incorrect measured values with incorrect grounding

NOTICE

Incorrect measured values with incorrect grounding

The device must not be grounded via the "+" connection. It may otherwise malfunction and be permanently damaged.

- If necessary, ground the device using the "-" connection.

Note

Electromagnetic compatibility (EMC)

You can use this device in industrial environments, households and small businesses.

For metal housings there is an increased electromagnetic compatibility compared to high-frequency radiation. This protection can be increased by grounding the housing, see Chapter "PROFIBUS assembly guidelines (Page 66)".

5.2 Connecting the device

5.2.1 PROFIBUS assembly guidelines

Further information on PROFIBUS and PROFINET can be found on the Internet "PI PROFIBUS - PROFINET (http://www.profibus.com/home/)" > DOWNLOADS under "Installation guidelines".

Opening the device

1. Use a 3 mm Allen key to loosen the cover (if present).
2. Unscrew the cover of the electrical cable compartment. An identification text "FIELD TERMINALS" is provided at the side of the housing.

Procedure

1. Insert the connecting cable through the cable gland ②.
2. Connect the device to the plant with the protective conductor connection ⑥.

3. Connect the wires to the terminals "+" and "-" ③.

   The device is not polarity sensitive.

4. If necessary, ground the shield to the screw of the ground terminal ⑧. The ground terminal is electrically connected to the external protective conductor connection.

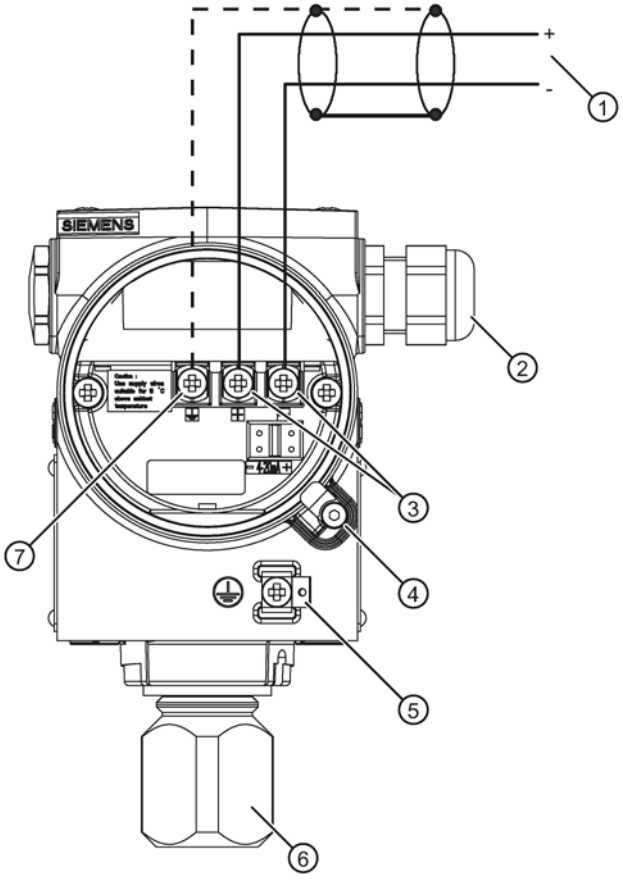

① PROFIBUS PA/FOUNDATION™ Fieldbus FF
② Cable entry
③ Connecting terminals
④ Safety catch
⑤ Protective conductor connector/equipotential bonding terminal
⑥ Process connection
⑦ Grounding terminal

Image 5-1 Electrical connection, power supply

Closing the device

1. Screw the covers ④⑦ back on as far as they will go.
2. Secure each cover with the cover catch ③⑥.
3. Close the key cover ①.

4. Tighten the screws in the key cover.
5. Check the tightness of the blanking plugs ⑤ and cable gland ② in accordance with the degree of protection.

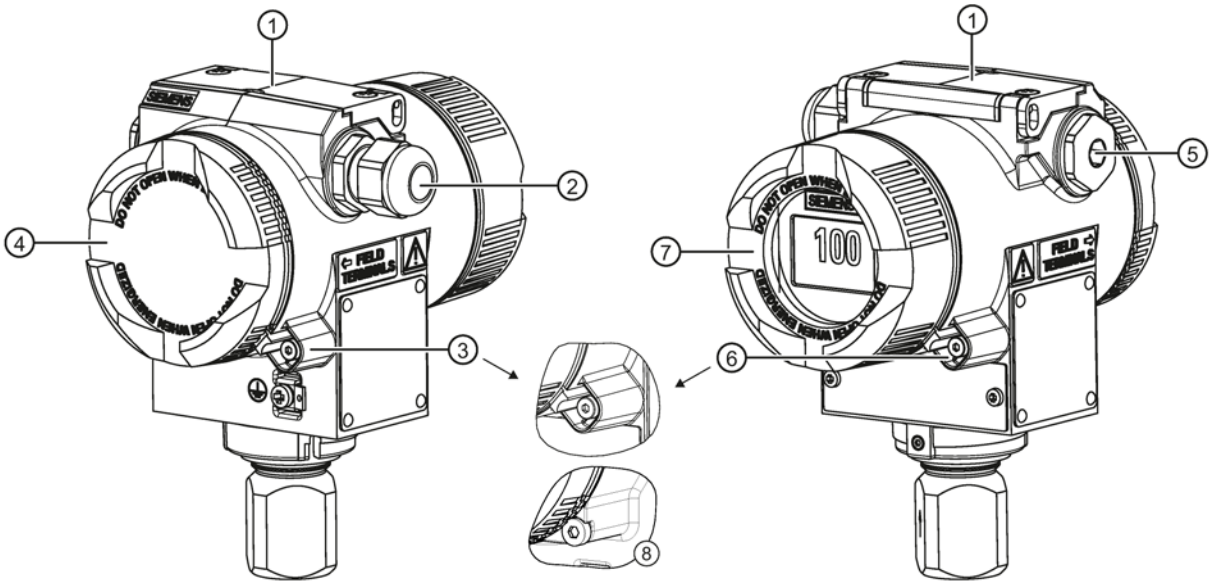

①	Key cover	⑤	Blanking plug
②	Cable gland	⑥	Safety catch (front)
③	Safety catch (back)	⑦	Cover (front), optionally with inspection window
④	Cover (rear) for electrical terminal compartment	⑧	Safety catch for stainless steel enclosure

Image 5-2 View of the pressure transmitter: Left: Back right: Front view

See also

Structure (Page 24)

5.3 Connecting the M12 connector

Procedure

⚠ CAUTION
A conductive connection must not exist between the shield and the connector housing.

⚠ WARNING
The connector may only be used for Ex ia devices and non-Ex devices; otherwise the safety required for the approval is not guaranteed.

Note

Observe the protection class of the M12 connector when defining the protection class.

For devices in which a connector is already available on the housing, the connection is established using a cable jack.

1. Thread the parts of the cable jack as described by the connector manufacturer.
2. Strip approximately 18 mm of the bus cable ①.
3. Twist the shield.
4. Thread the shield in the insulating sleeve.
5. Draw 8 mm of shrink sleeve over the cable, wires and shield up to the reference edge ②.
6. Screw the cable ends and the shield in the pin insert.
7. Fix the parts of the cable jack as described by the connector manufacturer.

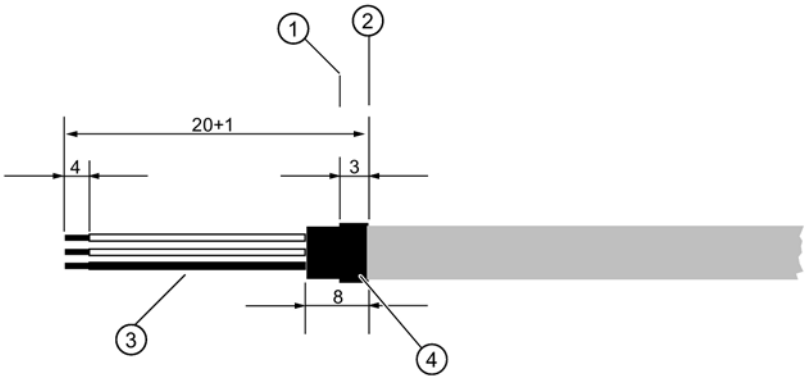

Image 5-3 Preparing the connecting cable

①	Reference edge for stripping	③	Insulating sleeve over the shield
②	Reference edge for the dimension specifications for cable assembly	④	Shrink sleeve

Pin assignment

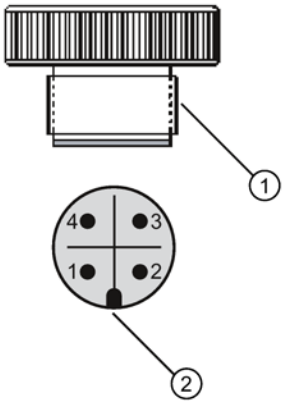

Layout for M12 connector

①	M12 x 1 thread
②	Positioning catch
1	+
2	Not connected
3	-
4	Shield

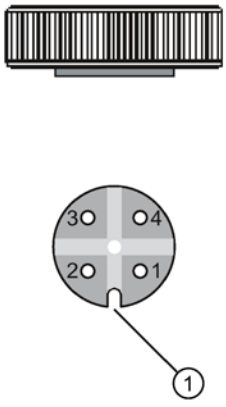

Layout for M12 jack

①	Positioning slot
1	+
2	Not connected
3	-
4	Shield
	Middle jack contact not connected

Operation

6

6.1 Overview of operation

Introduction

The following description provides an overview of the operating functions which can be executed with the pressure transmitter and the safety information which is to be observed when doing so. You can operate the pressure transmitter locally and over PROFIBUS. Local operation will be described first, and then the operating functions over PROFIBUS.

Chapter contents:

- Basic safety instructions (Page 72)
- Information on operation (Page 72)
- Display (Page 73)
- Local operation (Page 76)

Overview of operating functions

You can operate the basic settings of the pressure transmitter using the buttons on the device. The entire range of settings can be operated via PROFIBUS.

The following table describes the basic operating functions offered by a device with display.

Table 6- 1 Operating functions

Function	With buttons	Over PROFIBUS
Electrical damping	Yes	Yes
Zero point calibration (position correction)	Yes	Yes
Key lock and write protection	Yes	Yes
Measured value display	Yes	Yes
Unit	Yes	Yes
Bus address	Yes	Yes
Device mode	Yes	Yes
Decimal point	Yes	Yes
Zero point drift	Yes	Yes
LO calibration	Yes	Yes
HI calibration	Yes	Yes
Customized characteristic curve	No	Yes
Diagnostics function	No	Yes
Measurement type	No	Yes

Further operating functions are accessible via PROFIBUS for special applications.

6.2 Basic safety instructions

Note

Incorrect reproduction of the process pressure

If you have changed the basic functions of the pressure transmitter, the display and the measurement output could be set such that the actual process pressure is not reproduced.

Therefore, check the basic parameters before commissioning.

6.3 Information on operation

The following rules apply to operation of the pressure transmitter:

- The device always increments numerical values in steps from the displayed digit of least significance.

  If you press the button longer, it increments the next displayed digit of higher significance. This procedure can be used for fast coarse setting over a wide numerical range. For the fine adjustment, release the [↑] or [↓] button again. Then press the button again.

Violations of the measured value limits are output on the display by ⬆ or ⬇.

- If you wish to operate the device using the buttons, the lock must be canceled.
- If you are operating the pressure transmitter locally, write operations over PROFIBUS are rejected during this time.

  It is possible to read data at any time, e.g. measured values.

Note

If you allow more than 2 minutes to pass following the pressing of a button, the setting is saved and the measured-value display is returned to automatically.

The operating instructions in the section "Local operation (Page 76)" apply if the device has been delivered with a dummy cover.

6.4 Display

6.4.1 Display elements

Structure

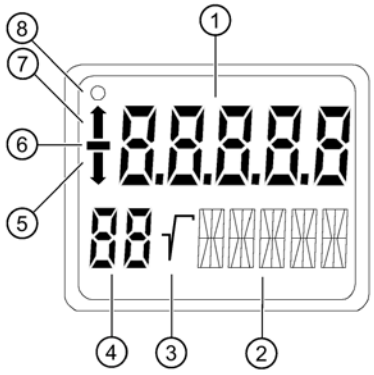

① Measured value
② Unit/bar graph
③ Root display
④ Mode/button lock
⑤ Violation of lower limit
⑥ Symbol for measured value
⑦ Violation of higher limit
⑧ Communication display

Image 6-1 Display layout

Description

The display is used for the local display of the measured value ① with:

- Unit ②
- Mode ④
- Sign ⑥
- Statuses ⑤ and ⑦

The display ① outputs the measured value in a physical unit ② which can be selected by the customer.

The *Violation of lower limit* ⑤ and *Violation of upper limit* ⑦ displays are also referred to as status since they have meanings dependent on the settings.

If the communication display ⑧ blinks, this indicates an active communication.

6.4.2 Units display

Description

The unit display comprises five 14-segment fields for representing the unit as a percentage value or physical unit. A bar graph showing the percentage measured value range from 0 to 100% can be displayed as an alternative to the unit. The bar graph function is disabled by default.

Display

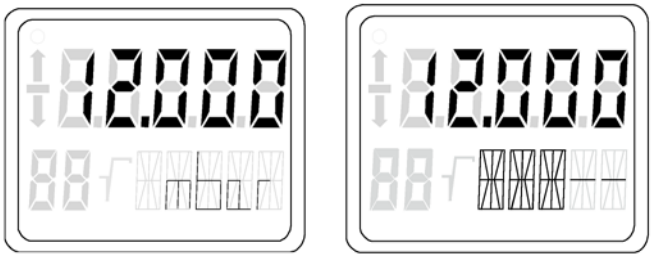

Image 6-2 Examples of measured-value display and bar graph

The following messages may appear as a ticker in the bottom line of the display.

Table 6- 2 Message as ticker

Ticker	Meaning
"DIAGNOSTIC WARNING"	Is always displayed if: • An event configured by the user is to be signaled with a warning. For example: – Limit reached – Event counter for limit values exceeded – Calibration time expired • The status of one of the device variables is "UNCERTAIN".
"SIMULATION"	Is always displayed when the simulation of a pressure value or temperature value is active.

6.4.3 Error display

Description

If hardware faults, software errors or diagnostic interrupts occur in the pressure transmitter, the message "Error" appears in the measured value display.

A status code indicating the type of error appears in the bottom line of the display. This diagnostic information is also available via PROFIBUS.

Error messages are displayed for about 10 seconds after the occurrence of the error.

Display

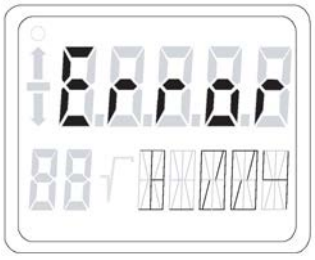

Image 6-3 Example of error message

See also

Overview of status codes (Page 189)

6.4.4 Mode display

Description

The selected active mode is shown in the mode display.

Display

Image 6-4 Example for mode display

In the example, a damping of 0.2 seconds was set in mode 4.

6.4.5 Status display

Description

The arrows of the status display have a different meaning depending on the mode setting. The table below shows the meanings of the arrows in the respective functions.

Meaning

Table 6- 3 Meaning of the arrow displays

Function	Mode	Display ↑	Display ↓
Measured value display		Pressure exceeds the upper sensor limit.	Pressure falls below the lower sensor limit.
Adjusting damping	4	Exceeds the upper damping value	Falls below the lower damping value
LO calibration	19	–	Calibration span too low
HI calibration	20	Calibration span too high	–
Alarm		Upper alarm limit reached	Lower alarm limit reached
Warning		Upper warning limit reached	Lower warning limit reached

See also

Overview of status codes (Page 189)

6.5 Local operation

6.5.1 Control elements for local operation

Introduction

The pressure transmitter can be operated on-site using the keys. You can select and execute the functions described in the table using adjustable modes. Operation by buttons is not available for devices without display.

Control elements

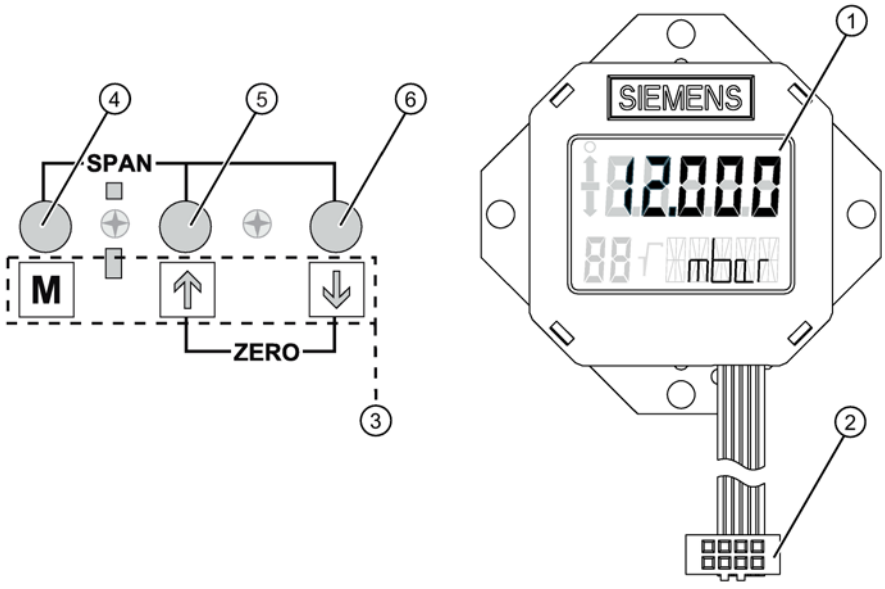

①	Display	④	Mode key
②	Connecting plug for the display	⑥	Increment button
③	Button symbols (see cap)	⑤	Decrement button

Image 6-5 Position of keys and display

Operating functions

Note

Zero point calibration

For absolute pressure transmitters, the start of scale value is at vacuum.

A zero-point calibration with pressure transmitters which do not measure absolute pressure leads to faulty settings.

Note

Locking of buttons and functions

Local operation is possible if you are in measuring mode and neither "L", "LA" nor "LL" is output in the mode display.

If operations are disabled, parameters can still be read. An error message is output if you try to change parameters.

Table 6- 4 Operating functions using buttons

Function	Mode	Button function			Display, explanations	
	[M]	[↑]	[↓]	[↑] and [↓]		
Measured value	Here you can select the modes.				The current measured value is displayed as you have set it in the function "Measured-value display, mode 13".	
Error display					Error	A fault exists.
Electrical damping	4	Increase damping	Decreased damping	Set to 0	Time constant T_{63} in seconds Range of adjustment: 0.0 s to 100.0 s	
Zero point calibration (position correction)	7[1)]	Increase correction value	Decrease correction value	Apply	Pressurize the pressure transmitter for gauge pressure, differential pressure, flow rate or level. Evacuate pressure transmitter for absolute pressure (< 0.1 ‰ of the measuring span). Measured value in pressure unit	
Locking of buttons and functions	10	Change		Cancel 5 s *)	L	Locking of buttons and functions (hardware write protection); local operation disabled
					LC	Write blocking; local operation possible
					LA	Enabling of local operation
					LL	Combination of write blocking and no enabling of local operation
					*) Does not apply to "Safe (PROFIsafe) mode". In this case, refer to the information in section "PROFIsafe (Page 141)".	
Measured value display	13	Select from various possibilities.		–	Selection of various variables	
Unit	14	Select from table for measured value display.		First value in each case from the physical unit table	Physical unit	
Bus address	15	Increase	Decrease		Node address on the PROFIBUS Value between 0 and 126	
Operating mode of device, see also Device operation type (Page 88)	16	Change			Selection of operating mode of device • Profile-compatible 1 AI • Profile-compatible with extensions • Old SITRANS P/PA device • Profile-compatible 1 AI, 1 TOT	
Decimal point	17	To left	To right		Position of decimal point in display	
Zero point adjustment	18				Display of current measuring range	
LO calibration	19	Increase value	Decrease value	Apply	Calibrate bottom point of characteristic	
HI calibration	20	Increase value	Decrease value	Apply	Calibrate top point of characteristic	

1) Mode 7 is not available with transmitter for absolute pressure. Please note the information in the sections "" and "".LO calibration (Page 91)HI calibration (Page 92)

6.5.2 Operation using buttons

Introduction

This overview informs you about the most important safety notes to be observed when operating the pressure transmitter. Furthermore, the overview guides you in adjusting the operating functions on site.

Requirement

The keyboard must have been unlocked in order to operate the device using the buttons.

Procedure

In the default setting, the device is in the measured value display.

To adjust the operating functions, proceed as follows:

1. Loosen both the screws of the keyboard cover and lift it upwards.
2. Press the [M] button until the desired mode is displayed.
3. Keep pressing the [↑] or [↓] button until the desired value is displayed.
4. Press the [M] button.

   Now you have saved the values and the device goes to the next mode.
5. Close the keyboard cover using the two screws.

Note

If you allow more than 2 minutes to pass after pressing a button, the setting is saved and the measured value display is returned to automatically.

6.5.3 Setting/adjusting electrical damping

Difference between setting and adjusting

You can set or adjust the time constant of electrical damping using the buttons. Setting means that the time constant is automatically set to 0 seconds. Adjusting means that the time constant is adjusted between 0 and 100 seconds using the increments of 0.1 seconds. This electrical damping also has an effect on the built-in basic damping of the device.

Condition for "setting"

You are familiar with the correct operation of the pressure transmitter and the associated safety information.

Setting electrical damping

To set electrical damping to 0 seconds, proceed as follows:

1. Set mode 4.
2. Press the [↑] and [↓] buttons simultaneously.
3. Save with the [M] button.

Result

Electrical damping has been set to 0 seconds.

Condition for "adjusting"

The default adjusting of steps is an interval of 0.1 seconds. If you press the [↑] or [↓] button for a long time, the steps are increased.

Adjusting electrical damping

To adjust electrical damping, proceed as follows:

1. Set mode 4.
2. Adjust the desired damping.
3. Save with the [M] button.

Result

Electrical damping has been set to the desired time constant.

See also

Operation using buttons (Page 79)

Electrical damping (filter time constant) (Page 116)

6.5.4 Calibrate zero point

Introduction

A zero point calibration is used to correct zero errors resulting from the mounting position of the transmitter. You must proceed differently depending on the device version.

Requirement

You are familiar with the correct operation of the pressure transmitter and the associated safety information.

Zero point calibration for gauge pressure transmitter

To calibrate the zero point, proceed as follows:

1. Pressurize the pressure transmitter.
2. Set mode 7.
3. Press the [↑] und [↓] buttons simultaneously for 2 seconds.
4. Save with the [M] button.

Note

Zero point calibration for absolute pressure transmitter

Mode 7 is not available with transmitter for absolute pressure. Please note the information in the sections "Balance LO (Page 91)" and "HI calibration (Page 92)".

6.5.5 Locking of buttons and functions

Introduction

In mode 10 you can lock the functions which are always possible using the buttons. An example of locking is the saving of stored parameter settings.

Requirement

Note

Check the measured value display to establish that this indicates the desired setting.

Activation of locking of buttons and functions

To lock the buttons, proceed as follows:

1. Set mode 10.
2. Activate the locking of buttons and functions.
3. Save with the [M] button.

"L" is output in the mode display.

Deactivate the locking of buttons and functions

To unlock the buttons, proceed as follows:

1. Set mode 10.
2. Press the [↑] und [↓] buttons simultaneously for 5 seconds.

Locking of the buttons and functions is now deactivated.

"- -" is output in the mode display.

See also

Key lock and write protection (Page 116)

6.5.6 Measured value display

Introduction

In mode 13, select a variable which represents the source of the measured value display. The variable is based on the measurement type set at the factory or over the bus. The measurement type cannot be set locally.

The measurement type options available can be set in SIMATIC PDM using the "transmitter type" parameter. Find the following values under this parameter:

- Pressure
- Flow, not relevant for relative and absolute pressure
- Level
- Volume

Procedure

To select the source for the measured value display, proceed as follows:

1. Set mode 13.
2. Select the variable.
3. Save with the [M] button.

Parameter

The following tables give the meaning of the variables, depending on the value of the "transmitter type" parameter. This allows you to select the units available in mode 14.

Table 6- 5 Measurement type "Absolute pressure", "Differential pressure" and "Pressure"

Source of measured value display	Variable	Available unit	
From analog input function block:			
[0] : Output :	OUT	(P) (U)	Pressure User specific
From pressure transducer block:			
[1] : Secondary variable 1	SEC 1	(P)	Pressure
[2] : Measurement value (primary variable)	PRIM	(P)	Pressure
[3] : Sensor temperature	TMP S	(T)	Temperature
[4] : Electronics temperature	TMP E	(T)	Temperature
[7] : Raw pressure value	SENS	(P)	Pressure

Table 6- 6 Measurement type "Flow"

Source of measured value display	Variable	Available unit	
From analog input function block:			
[0] : Output	OUT	(L) (U)	Level User specific
From pressure transducer block:			
[1] : Secondary variable 1	SEC 1	(P)	Pressure
[2] : Measurement value (primary variable)	PRIM	(L)	Level
[3] : Sensor temperature	TMP S	(T)	Temperature
[4] : Electronics temperature	TMP E	(T)	Temperature
[5] : Secondary variable 3:	SEC 3	(M)	Mass flow
[7] : Raw pressure value	SENS	(P)	Pressure
From totalizer function block:			
[6] : Totalizer output	TOTAL	(V) (ΣM) *)	Volume Total mass flow Flow not relevant for relative and absolute pressure
*) The option of selecting the physical unit is additionally determined by the channel setting (mass or volume) of the analog input and totalizer function blocks.			

Table 6- 7 Measurement type "Level (height)"

Source of measured value display	Variable	Available units	
From analog input function block:			
[0] : Output	OUT	(L) (U)	Level User specific
From pressure transducer block:			
[1] : Secondary variable 1	SEC 1	(P)	Pressure
[2] : Measurement value (primary variable)	PRIM	(L)	Level
[3] : Sensor temperature	TMP S	(T)	Temperature
[4] : Electronics temperature	TMP E	(T)	Temperature

Table 6- 8 Measurement type "Level (volume)"

Source of measured value display	Variable	Available units	
From analog input function block:			
[0] : Output	OUT	(V) (U)	Volume User specific
From pressure transducer block:			
[1] : Secondary variable 1	SEC 1	(P)	Pressure
[2] : Measurement value (primary variable)	PRIM	(V)	Volume
[3] : Sensor temperature	TMP S	(T)	Temperature
[4] : Electronics temperature	TMP E	(T)	Temperature

See also

Block model for collection and processing of measured values (Page 95)

Pressure transducer block (transducer block 1) (Page 98)

6.5.7 Unit

Introduction

In mode 14, set the physical unit in which the device's measured value display should be represented.

Requirement

You have already selected the desired source for the measured value display in mode 13.

Procedure

To adjust the physical unit, proceed as follows:

1. Set mode 14.

   The physical unit used appears in the bottom line of the display.
2. Select a unit.
3. Save with the [M] button.

The following tables show the physical units available in each measurement type.

Units

Table 6- 9 Unit for pressure (P)

Unit	Display		Unit	Display
Pa	Pa		g/cm²	G/cm2
MPa	MPa		kg/cm²	KGcm2
kPa	KPa		inH2O	INH2O
hPa	hPa		inH2O(4°C)	INH2O
bar	bar		mmH2O	mmH2O
mbar	mbar		mmH2O(4°C)	mmH2O
torr	Torr		ftH2O	FTH2O
atm	ATM		inHg	IN HG
psi	PSI		mmHg	mm HG

Table 6- 10 Unit for volume (V)

Unit	Display		Unit	Display
m^3	m3		ft^3	FT3
dm^3	dm3		yd^3	Yd3
cm^3	cm3		pint (US)	Pint
mm^3	mm3		quart (US)	Quart
l	L		US gallon	GAL
cl	cL		imp. gallon	ImGAL
ml	mL		bushel	BUSHL
hl	hL		barrel	bbl
in^3	IN3		barrel liquid	bblli

Table 6- 11 Unit for volume flow (F)

Unit	Display		Unit	Display
m^3 / second	m3/S		ft^3 / hour	FT3/H
m^3 / minute	m3/M		ft^3 / day	FT3/D
m^3 / hour	m3/H		Gallons / second	Gal/S
m^3 / day	m3/D		Gallons / minute	Gal/M
Liters / second	L/S		Gallons / hour	Gal/H
Liters / minute	L/M		Gallons / day	Gal/D
Liters / hour	L/H		British barrel liquid / second	bbl/S
Liters / day	L/D		British barrel liquid / minute	bbl/M
Millions of liters / day	ml/D		British barrel liquid / hour	bbl/H
ft^3 / second	FT3/S		British barrel liquid / day	bbl/D
ft^3 / minute	FT3/M			

Table 6- 12 Unit for mass flow (M)

Unit	Display		Unit	Display
g / s	G/S		Pound / s	P/S
g / min	G/MIN		Pound / min	lb/M
g / h	G/H		Pound / h	lb/H
g / d	G/D		Pound / d	lb/D
Kg / s	KG/S		Short tons / s	ST/S
Kg / min	KG/M		Short tons / min	ST/m
Kg / h	KG/H		Short tons / h	ST/h
Kg / d	KG/D		Short tons / d	ST/d
T / s	T/S		Long tons / s	LT/s
T / min	T/M		Long tons / m	LT/m
T / h	T/H		Long tons / h	LT/h
T / d	T/D		Long tons / d	LT/d

Table 6- 13 Unit for level (L)

Unit	Display		Unit	Display
m	m		ft	FT
cm	cm		in	IN
mm	mm		yd	Yd

Table 6- 14 Unit for mass (M)

Unit	Display		Unit	Display
kg	KG		lb	lb
g	G		STon	STon
t	T		LTon	LTon
oz	oz			

Table 6- 15 Unit for temperature (T)

Unit	Display		Unit	Display
K	K		°F	°F
°C	°C		°R	°R

Table 6- 16 Unit for user-specific (U)

Unit	Display
arbitrary	Max. 16 characters, If more than 5 characters, the display shows the unit as a ticker. The input of the characters to be displayed can only be performed through the PROFIBUS.
%	%

Note

The profile allows a much larger number of possible units. There is no limitation on some physical values special to the output of the analog input function block. For instance, if you have selected a unit with SIMATIC PDM which does not appear in the corresponding valid list, the current measurement value will be shown without a unit in the measured value display.

See also

Units of the pressure transducer block (Page 102)

6.5.8 Bus address

Introduction

The node address of the device on the PROFIBUS, the so-called bus address, is set in mode 15. The permissible range runs from 0 to 126.

Note

Do not change the bus address of the device while your system is running. The device will then no longer be visible from the application program.

Procedure

To change the bus address, proceed as follows:

1. Set mode 15.

   The currently set bus address of the device appears in the measured value display.
2. Select the bus address within the permissible range.
3. Save with the [M] button.

6.5.9 Device operation type

Introduction

Set the device mode to mode 16.

The device mode [1] is preset on the pressure transmitter. Other device modes are only suitable if you have set another operation type through PROFIBUS.

Table 6- 17 Device mode

Display	Meaning
[0]	Profile-compliant: Exchangeable for pressure transmitters with PROFIBUS PA Profile 3.0, with analog input function block, without totalizer
[1]	Delivery state Profile-compatible with extensions: Full functionality of the SITRANS P with: • Analog input function block • Totalizer

Display	Meaning
[2]	Exchangeable for previous SITRANS P/PA device
[128]	Profile-compliant: Exchangeable for pressure transmitter with PROFIBUS PA Profile 3.0 with: • Analog input function block • Totalizer.

Procedure

To change the device mode, proceed as follows:

1. Set mode 16.

   The current operation type "0", "1", "2" or "128" appears in the measured value display.

2. Select the device mode.

   The local operation type must match the operation type in PROFIBUS.

3. Save with the [M] button.

Note

Each device operation type is assigned a particular device master data file (GSD file).

If the configuration of your PROFIBUS-PA strand does not correspond to the device mode selected, the device will not start periodic data exchange. Successful establishment of communication is identified by the indicator "o" at the top left of the display.

Note

If the device is exchanging period data, no change is possible to the device operating type.

Table 6- 18 Device master data file

Display	File name
[0]	pa_29700.gsd or pa_39700.gsd
[1]	siem80A6.gsd
[2]	sip1804B.gsd
[128]	pa_29740.gsd or pa_39740.gsd

See also

Errors (Page 192)

6.5.10 Position of the decimal point

Introduction

Set the position of the decimal point in mode 17. The device can display measured values with up to four decimal places.

Procedure

To move the decimal point, proceed as follows:

1. Set mode 17.

   A mask appears in the display showing the current position of the decimal point.

2. Select the desired display format.

   8.8888

   88.888

   888.88

   8888.8

   88888

3. Save with the [M] button.

Note

If you set the decimal point too far to the right, the resolution of the display may be too low. The display may show e.g. "0" instead of "0.43".

If you set the decimal point too far to the left, it can overflow. The display will then show the character sequence 9.9.9.9.9 and error code F_004 instead of the measured value.

See also

Errors (Page 192)

6.5.11 Display of the zero-point adjustment

Introduction

The zero-point adjustment is shown in mode 18. The zero point adjustment is carried out by the zero point calibration in mode 7 or by the calibration procedure in modes 19 and 20.

Procedure

To display the current zero-point adjustment, proceed as follows:

1. Set mode 18.

   The current zero offset appears in the display.

2. Close with the [M] button.

6.5.12 LO calibration

Introduction

The slope of the characteristic is changed in mode 19. This rotates the characteristic around setting point HI.

This function replaces the zero-point calibration (mode 7) which is not permitted for absolute pressure transmitters.

The unit in which you want to calibrate is set using the following functions:

- In mode 13, set the source of the measured value display[7] : Raw pressure value, variable SENS.
- In mode 14, select the desired pressure unit.

Note

If you change this setting, the measurement range can be restricted to the point that the permissible sensor limits are violated even with small pressure changes.

Procedure

To calibrate LO, proceed as follows:

1. Set mode 19.

   The display shows the value of the last calibration procedure, with the appropriate unit.

2. Create the reference pressure.
3. Press the [↑] or [↓] button.

   The measured value display switches to the current pressure value. Using the [↑] and [↓] keys, you can enter the reference value starting from there.

4. Press the [↑] und [↓] buttons simultaneously for 2 seconds.
5. Save with the [M] button.

Note

In the case of transmitters for absolute pressure, note the following information:

- You need a thruster to apply the reference pressure.
- The value of the reference pressure can be changed by only about 10%.

Result

If the calibration was successful, the current measurement value of the device will be displayed, and will correspond to the calibration value as long as the reference pressure is still applied.

If you switch to the measured value display without taking a sufficiently large calibration span into account, the pressure status "Bad" B_004 will be displayed.

The failure logic of the function block is activated. The output has the status "Unsure" U_0xx, depending on the setting.

If the two trim points are too close together, status F_006 is displayed. The smallest calibration span depends on the nominal measurement range. Select either the higher reference pressure in mode 20, or the lower reference pressure in mode 19.

As long as mode 19 is active, you can repeat this procedure as often as necessary.

View LO calibration

To view the LO calibration, proceed as follows:

1. Set mode 19.

   The display shows the value of the last calibration procedure, with the appropriate unit.
2. Leave the mode by pressing [M].

See also

Errors (Page 192)

Calibrating the sensor (Page 125)

6.5.13 HI calibration

Introduction

The slope of the characteristic is changed in mode 20. This rotates the characteristic around setting point LO.

The unit in which you want to calibrate is set using the following functions:

- In mode 13, set the source of the measured value display[7] : Raw pressure value, variable SENS.
- In mode 14, select the desired pressure unit.

Note

If you change this setting, the measurement range can be restricted to the point that the permissible sensor limits are violated even with small pressure changes.

Procedure

To calibrate HI, proceed as follows:

1. Set mode 20.

   The display shows the value of the last calibration procedure, with the appropriate unit.
2. Create the reference pressure.
3. Press the [↑] or [↓] button.

   The measured value display switches to the current pressure value. Using the [↑] and [↓] keys, you can enter the reference value starting from there.
4. Press the [↑] und [↓] buttons simultaneously for 2 seconds.
5. Save with the [M] button.

Note

In the case of transmitters for absolute pressure, note the following information:

- You need a thruster to apply the reference pressure.
- The value of the reference pressure can be changed by only about 10%.

Result

If the calibration was successful, the current measurement value of the device will be displayed, and will correspond to the calibration value as long as the reference pressure is still applied.

If you switch to the measured value display without taking a sufficiently large calibration span into account, the pressure status "Bad" B_004 will be displayed.

The failure logic of the function block is activated. The output has the status "Unsure" U_0xx, depending on the setting.

If the two trim points are too close together, status F_006 is displayed. The smallest calibration span depends on the nominal measurement range. Select either the higher reference pressure in mode 20, or the lower reference pressure in mode 19.

As long as mode 20 is active, you can repeat this procedure as often as necessary.

Viewing the HI calibration

To view the HI calibration, proceed as follows:

1. Set mode 20.

   The display shows the value of the last calibration procedure, with the appropriate unit.

2. Leave the mode by pressing [M].

See also

Errors (Page 192)

Calibrating the sensor (Page 125)

Operator control functions via PROFIBUS 7

7.1 Communications structure for PROFIBUS PA

7.1.1 Overview

This chapter describes the processing method of the device-specific function blocks using a graphical block model which is resolved into its individual layers step by step. Knowledge of the physical block is assumed: This block is therefore not explained in this chapter.

7.1.2 Block model for collection and processing of measured values

The device functions are subdivided into blocks of different task areas. They can be parameterized during asynchronous data transmission.

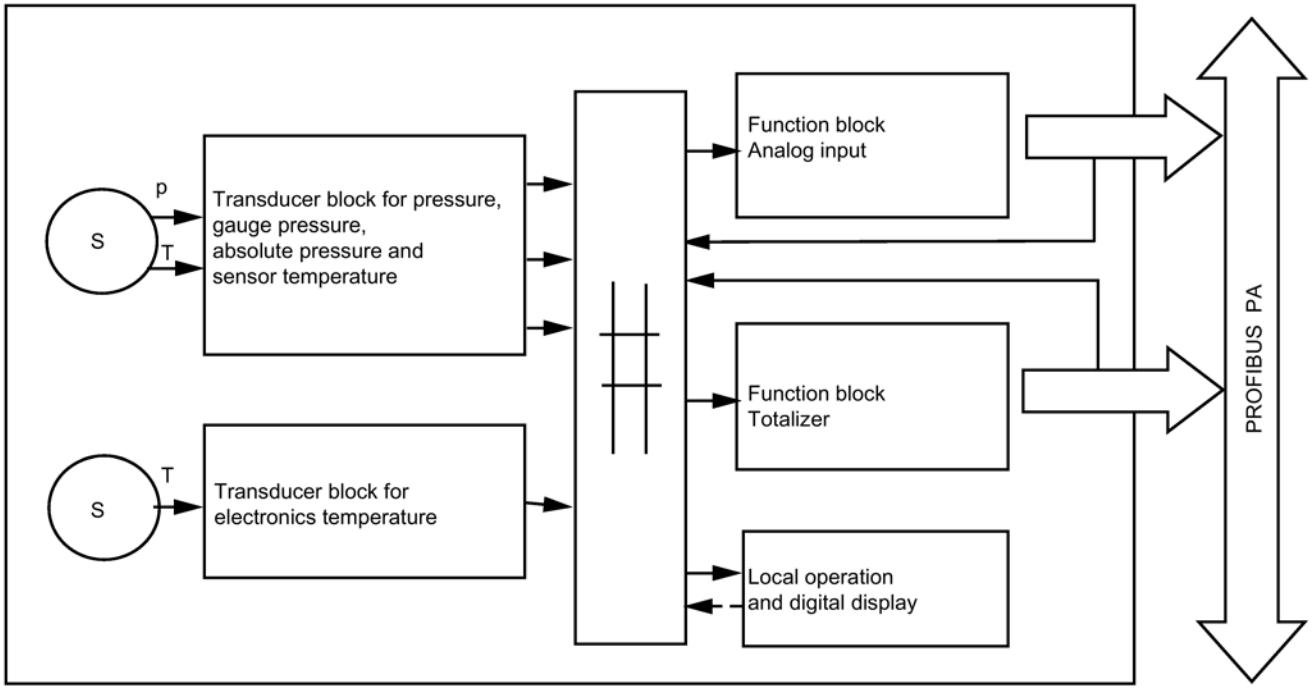

p Pressure S Sensor

T Temperature

Image 7-1 Block circuit diagram of collection and processing of measured values

Pressure transducer block

The transducer block for pressure handles the adaptation to the pressure sensor. Its output value is the linearized and temperature-compensated measurement result. When measuring levels and flow, the necessary recalculation of the measurement value is performed in the pressure transducer block. The output value is the linearized and temperature-compensated measurement result.

The pressure transducer block also processes the temperature measurement of the pressure sensor and monitors the pressure and temperature limits.

Example

In hydrostatic level measurement, the pressure transducer block converts the incoming pressure value into height or volume.

Electronics temperature transducer block

The electronics temperature transducer block executes the required temperature measurement functions and monitors the permissible temperature limits.

Analog input function block

The analog input function block further processes the selected measurement value and passes it on to the automation task.

Example

For a container full of water, you measure the volume. The analog input function block calculates the container volume [m^3] in a user-specific volume unit [bottles]. The output of this block gives the measured value and the corresponding status on the PROFIBUS.

Totalizer function block

The totalizer function block totals the volumes or mass that flowed during flow measurement. Its function is very similar to that of a water meter.

The output of this block forwards the totalized values and the corresponding status information via PROFIBUS.

Local operation and display

The display shows the desired measured value with its physical unit. You can select different functions for local operation.

Connection between blocks via parameters

The output values of the transducer blocks for pressure and electronics temperature can be fed to the analog input and totalizer function blocks as input values for further processing. To do this, the parameter "Channel" must be correctly set in each function block.

Table 7- 1 Connection between blocks

Transducer block	Output value (Parameters)	Usable in the analog input function block	Usable in the totalizer function block
Pressure	Temperature	X	
	Secondary variable 1	X	
	Secondary variable 2	X	
	Measurement value (primary variable)	X	X
	Secondary variable 3	X	X
Electronics temperature	Electronics temperature	X	

Parameters for measured value display

The values of the following parameters from the measurement and function blocks can be shown on the display. The parameter "Source for display" must be set appropriately.

Table 7- 2 Visualization on the display

Block	Parameter	Can be shown on the display
Pressure transducer block	Temperature	X
	Secondary variable 1	X
	Secondary variable 2	
	Measurement value (primary variable)	X
	Secondary variable 3	X
	Raw pressure value	X
Electronics temperature transducer block	Electronics temperature	X
Analog input function block	Output	X
Totalizer function block	Totalizer output	X

See also

Measured value display (Page 82)

Cyclical data transfer (Page 165)

Acyclic data transfer (Page 170)

7.1.3 Pressure transducer block

7.1.3.1 Pressure transducer block (transducer block 1)

The following figure shows the signal flow of measurement values from the sensor cell through the pressure transducer block into the appropriate output values, e.g. temperature, measurement value (primary variable), etc. The parameters of the individual functions, e.g. measurement range, output range, etc. can be changed using acyclic access.

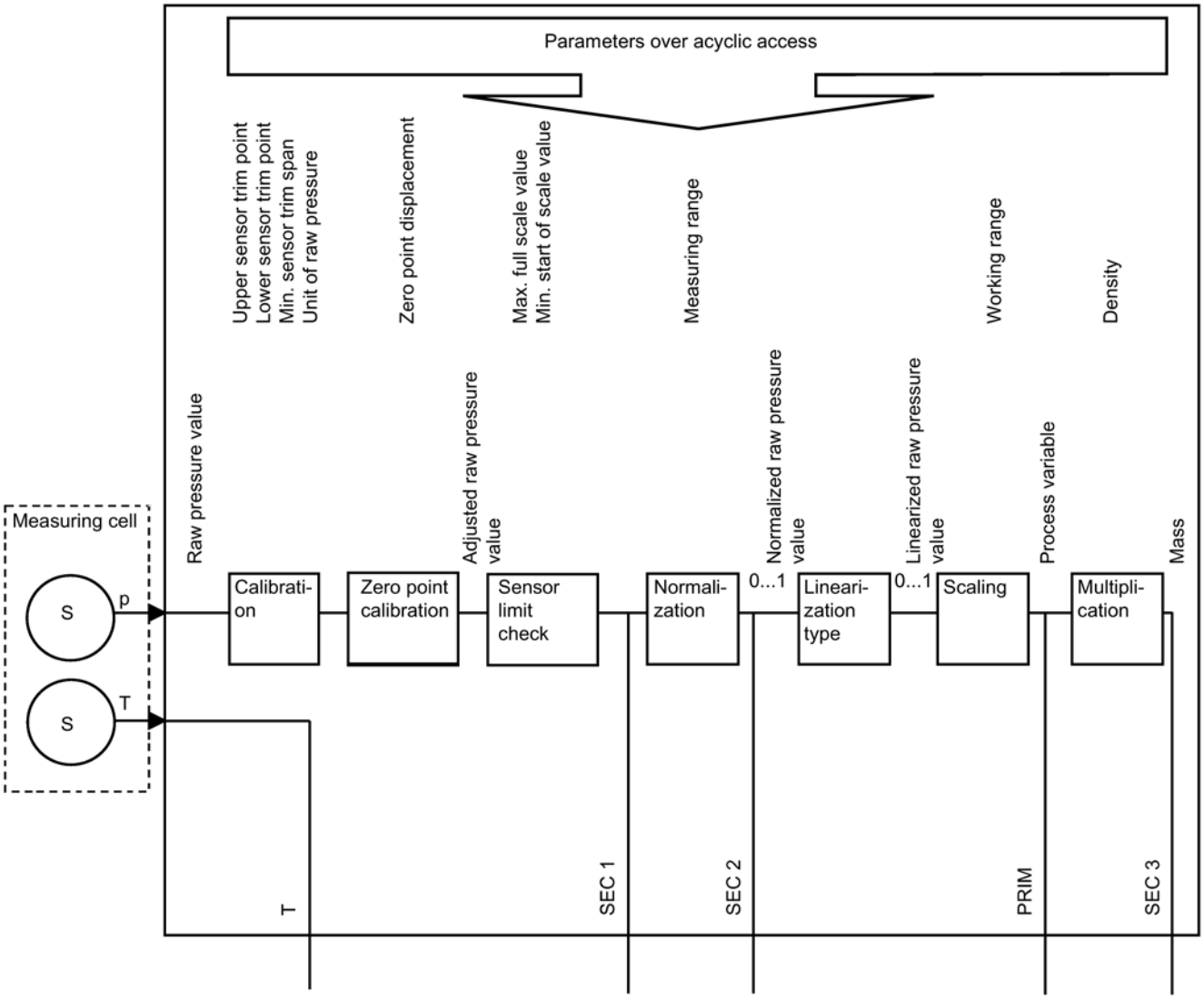

p	Pressure	SEC 1	Secondary variable 1
S	Sensor	SEC 2	Secondary variable 2
T	Temperature	PRIM	Primary variable
		SEC 3	Secondary variable 3

Image 7-2 Function groups of the pressure transducer block

Functional principle

The **raw pressure value** first passes through a **calibration**. The resulting **cleaned-up pressure value** is checked for **sensor limits**. Any violation of the limits results in status "Bad" and a diagnostic error of "error collecting measured value". The cleaned-up pressure value is stored in **SEC 1**.

Then, it is subjected to a **normalization**, where the input signal is expressed in the range 0 to 10 (percentage/100). The **normalized pressure value** is stored in **SEC 2**.

Afterwards, depending on the measurement task, it is fed through one of four different **linearization types**. **Scaling** uses the preset **working range** (minimum and maximum values) to determine the normalized and linearized measured value (pressure, height, or volume) of the actual process variable. This is stored in **PRIM**.

By means of a **multiplication** with the **density** the volume is used to compute the **mass**. This is stored in **SEC 3**.

The **temperature value of the pressure sensor** is available in the "**temperature**" parameter.

See also

Acyclic data transfer (Page 170)

7.1.3.2 Linearization type function group

The normalized pressure is fed through the linearization algorithms for adjustment to the various process requirements, as shown in the following figure. The algorithm is switched using the "Characteristic curve type" parameter.

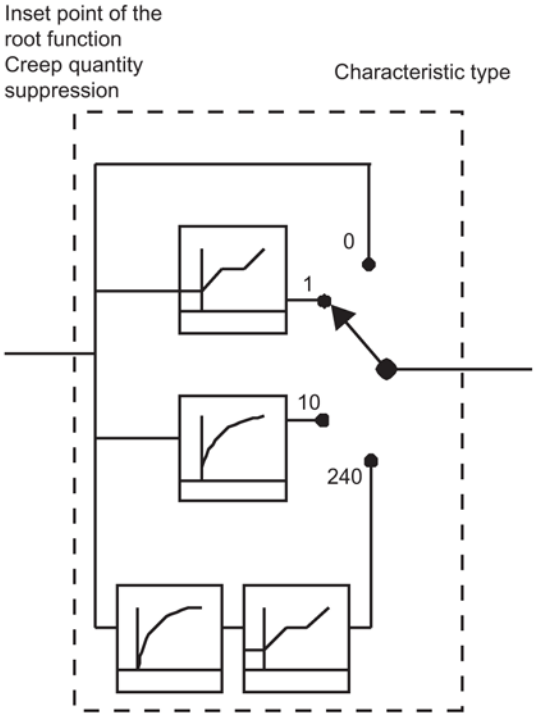

0	Linear	1	User-defined "table"
10	Root	240	Root/table

Image 7-3 Linearization type function group

Table 7- 3 Available linearization functions

Measurement task	Linearization symbol	Character-istic curve type	Description
Pressure meas-urement	-	Linear	No linearization
Level: Height	-	Linear	No linearization
Level: Volume	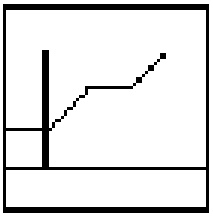	User de-fined (table)	Linearization of container characteris-tics. The relationship between level and volume is described using a maximum of 31 nodes at arbitrary intervals.

Measurement task	Linearization symbol	Characteristic curve type	Description
Flow: Mass/volume flow without correction	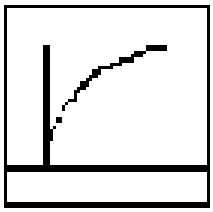	Root extracted	Square root extraction of the input value for measurement using the orifice plate method. Additional parameters for the root function: Application point of the root function and creep quantity suppression.
Flow: Mass/volume flow with correction	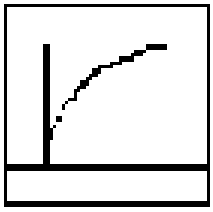 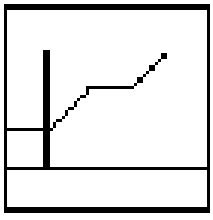	Root extracted and table	Square root extraction of the input value for measurement using the orifice plate method. With the orifice plate method, the accuracy is greatest when the operating point is at the design point. If there are deviations, the measurement deviation is also greater. For this reason, the measurement accuracy is corrected using a characteristic curve with 31 nodes.

To input a characteristic curve, select the characteristic curve type "user-defined (table)". Enter the "New number of nodes" which you will later want to enter.

The nodes must always be entered in pairs. For each point x[n] in the working range, a point y[n] is required.

The device checks which pair of nodes bracket the pressure (secondary variable 1) relative to the measurement range. To convert the pressure to the measured value (primary variable), the device interpolates on a line between the interpolation nodes.

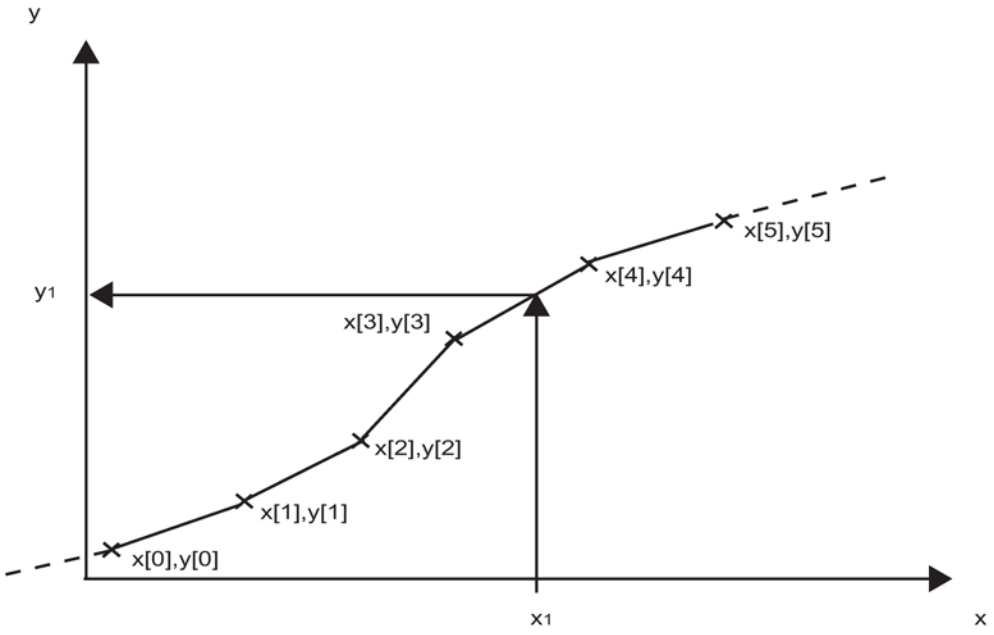

x Measurement range, here e.g. pressure (secondary variable 1)

y Working range, here e.g. volume, measured value (primary variable)

Image 7-4 Entry of a user-defined characteristic using nodes x(i), y(i)

The following table describes the vendor-specific parameters used with the flow measurement type and that supplement the root function.

Table 7- 4 Vendor-specific parameters for flow measurement

Parameter	Description
Application point of the root function	This parameter specifies the flow point as a % at which the differential pressure is set in a linear relationship to the flow.
Creep volume suppression	This parameter specifies the flow point as a % below which the flow becomes 0.

7.1.3.3 Units of the pressure transducer block

In the pressure transducer block you have the option of setting units in four different places. Depending on the measurement type, units are allowed from the following measurement functions:

Table 7- 5 Overview of available units

Variable	Measurement type				
	Pressure	Level	Volume	Volume flow	Mass flow
Raw pressure value	P	P	P	P	P
Secondary variable 1	P	P	P	P	P

Variable	Measurement type				
	Pressure	Level	Volume	Volume flow	Mass flow
Measurement value (primary variable)	P	L	V	F	F
Secondary variable 3	---	---	---	---	M

P	Pressure	F	Volume flow
L	Level	M	Mass flow
V	Volume		

For the measurement values (primary variables) you can also set the unit "%" for all measurement types.

Secondary variable 2 is a value normalized to one in all measurement types. The unit is fixed at "none".

See also

Unit (Page 84)

7.1.4 Electronics temperature transducer block

The electronics temperature transducer block is manufacturer-specific and not described in the profile. The transducer block is responsible for monitoring the internal temperature of the device electronics. The transducer block cannot change the pressure value, only its status.

The permissible limits correspond to those of the permissible ambient temperature. If a limit is violated, the status changes to "GOOD – Active Critical Alarm – High/Low-limit". The status of the cleaned-up pressure value in the pressure transducer block receives the status "UNCERTAIN – Value not accurate – high/low-limit". This procedure is accompanied by a PROFIBUS diagnostic message "Electronics temperature too high".

There are also peak indicators for maximum and minimum values available.

See also

Min/max indicator (Page 122)

Status (Page 167)

7.1.5 Analog input function block

The analog input function block is part of the standard functions of pressure transmitters. The following figure shows the processing of the measured values up to the **output**.

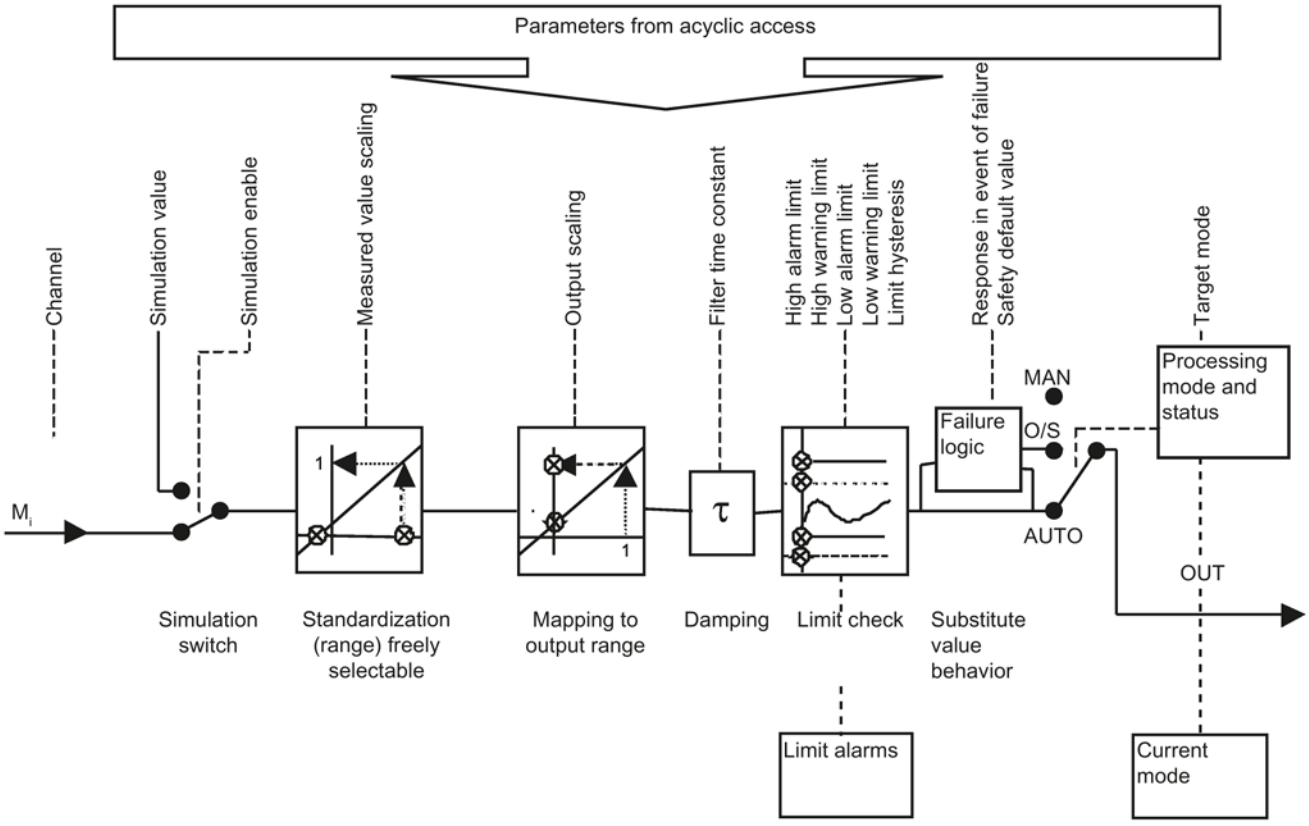

Image 7-5 Function groups of the analog input function block

M_i	Incoming measured value from the transducer for pressure	MAN	Manual
		O/S	Out of Service
OUT	Output (value, status)	AUTO	Automatically

Operating principle

The **incoming measurement value from the pressure transducer block** - or a **simulated value** prescribed through the **simulation switch** - is subject to another **normalization** (measured value scaling) and a **projection onto the output range** through output scaling (application-specific measured value).

Afterwards, the signal is **filtered** (damping) and check for being within preset **limit values**. An **upper and lower warning and alarm limit** is always available.

If the measured value has the status "Bad", the **shutdown logic** can output a **safety preset value**: This may be the last usable measured value or a preset substitute value.

Using the **target mode** selected in **Mode and status processing**, you can choose between output of the automatically acquired measured value (AUTO setting) or a manually set simulation value (MAN setting). If the function block is out of order (O/S setting) then the safety preset value is always output.

The analog input function block handles the numerical value separately from the physical unit. This allows you to set 1000 predefined units.

See also

Unit (Page 84)

7.1.6 Totalizer function block

The totalizer function block belongs to the standard functions of pressure transmitters. The function block is used in flow measurement. The following figure shows the processing of the measured values through to the output values.

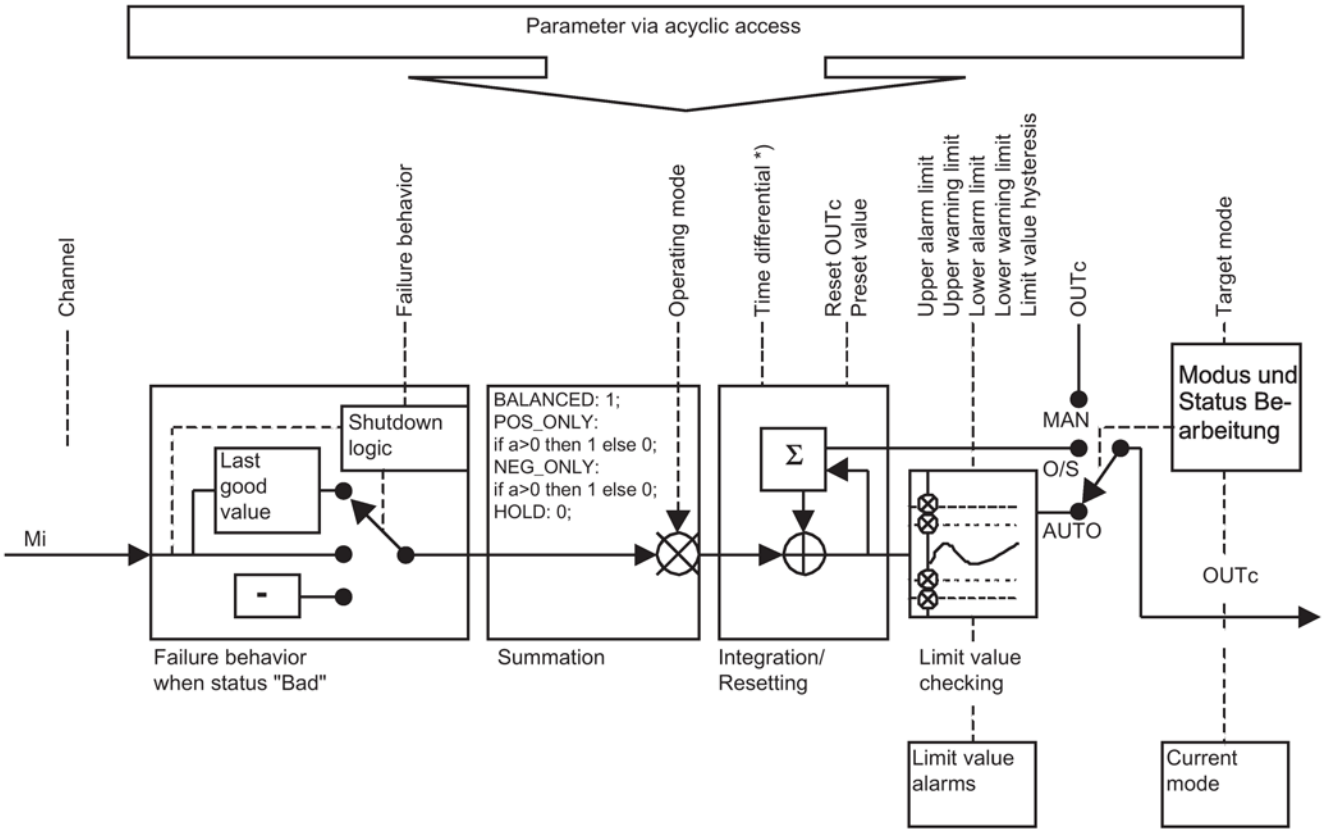

Image 7-6 Function groups of the totalizer function block

M_i	Incoming measured value from the transducer for pressure	MAN	Manual
		O/S	Out of Service

OUT Output (value, status) AUTO Automatically

Operating principle

The function block processes the **measured values from the transducer for pressure**. If the status of the measured values is "bad", the setting of the **failure behavior** decides whether this value or the last "good" value is forwarded for totalizing.

The measured value now pass through the specified **summation direction**. The measured values are fed to a forward flow, reverse flow or net counting function.

The measured values are then **integrated** over time so that the flow can be calculated for a specified time segment. Adherence to the limit values is also checked. Here, it is also possible to **reset** the counted total to a preload value.

You can reset or initialize the totalizer function block not only with acyclic services. You can configure the totalizer function block so that you can reset or initialize it from the user program in cyclic data traffic.

In the **Mode and status processing**, select **Target mode**. Using the target mode, you can choose between output of the automatically acquired measured value (AUTO setting) or a manually set simulation value (MAN setting).

The possible units correspond to the volume and mass values of the transducer for pressure.

See also

Configuration of user data (Page 165)

Units of the pressure transducer block (Page 102)

7.2 Overview of operating functions

A PC software program like SIMATIC PDM is necessary for operation over PROFIBUS PA. How to do this is explained in the corresponding user manual and the online help. The full functionality of the pressure transmitter is available via PROFIBUS PA communication.

7.3 Measurement

In measurement mode, measurement values such as pressure, fill level or flow are available on the PROFIBUS-PA interface. PROFIBUS PA communication is signaled by the communication symbol "o" on the display.

See also

Display elements (Page 73)

7.4 Settings

7.4.1 Overview of settings

The pressure transducer can handle numerous measurement tasks. You only have to make the following settings:

- Settings with a configuration tool, for example STEP 7 or HW Config: Here, you choose the desired configuration with which the cyclically transmitted user data will be structured.
- Settings with SIMATIC PDM: Here you set the parameters that also influence the cyclic user data.

See also

Configuration of user data (Page 165)

7.4.2 Settings

If you set a new device, select the measurement type, for example pressure or fill level. As a result, you will see the appropriate default parameter settings in the SIMATIC PDM user interface. The following sections will introduce only those which you will still have to set.

Procedure

To read out the settings, proceed as follows:

1. Start the "Download to PG/PC" function.

   The current settings are downloaded to the device.
2. Check the current settings.
3. Change the necessary settings.
4. Load the parameter settings into the device.
5. Save the parameter settings offline.

7.4.3 Pressure measurement

Procedure

To select pressure measurement, proceed as follows:

1. Start SIMATIC Manager.
2. Create a device with the desired measurement type.
3. To open SIMATIC PDM, double-click on the device you have created.

7.4.4 Level measurement

Procedure

To set fill level measurement, proceed as follows:

1. Start SIMATIC Manager.
2. Create a device with measurement type "Fill level".
3. To open SIMATIC PDM, double-click on the device you have created.

Depending on whether you want to measure a height, a volume, or a mass, set the following values.

Height measurement

To select height measurement, proceed as follows:

- Start SIMATIC PDM. Create an assignment between the pressure to be measured (measurement range) and the fill level to be recorded (working range), by setting these parameters:

> Input
> > Transducer block 1
> > Transmitter type: Level
> > > Measuring range
> > > Start of scale value
> > > Full scale value
> > > Working range
> > > Unit: Unit of length [m, cm, mm, ft, in, yd]
> > > Start of scale value
> > > Full scale value

- Create an assignment between the measured level value and the output value by setting these parameters:

> Output
> > Function block 1 - analog input
> > Channel: Measured value (primary variable)
> > > Measured value scaling
> > > Start of scale value: as in "working range"
> > > Full scale value: as in "working range"
> > > Output scaling
> > > Unit: as in "working range"
> > > Start of scale value: as in "working range"
> > > Full scale value: as in "working range"

You can also adjust the output to another process value. Assign the required unit to the parameters under the rubric output scaling. Assign the start of scale and full scale values according to the measured value scaling.

Volume measurement

- Start SIMATIC PDM. Create an assignment between the pressure to be measured (measurement range) and the volume to be recorded (working range), by setting these parameters:

> Input
> > Transducer block 1
> Transmitter type: Volume
> > > Measuring range
> Start of scale value
> Full scale value
> > > Working range
> Unit: Unit of volume [m^3, dm^3, cm^3, mm^3, l ...]
> Start of scale value
> Full scale value

- If there is no linear relationship between level and volume in your container, you can also define a characteristic curve:

> Input
> > Transducer block 1
> Transmitter type: Volume
> > > Characteristic curve
> Characteristic curve type: User-defined table
> > > Nodes
> New number of nodes: max. 31
> x[n] measurement range: Pressure value
> y[n] working range: Corresponding volume value

- Create an assignment between the measured volume value and the output value by setting these parameters:

> Output
> > Function block 1 - analog input
> Channel: Measured value (primary variable)
> > > Measured value scaling

Start of scale value: as in "working range"
Full scale value: as in "working range"

> > > Output scaling
Unit: as in "working range"
Start of scale value: as in "working range"
Full scale value: as in "working range"

You can also adjust the output to another process value. Assign the required unit to the parameters under the rubric output scaling. Assign the start of scale and full scale values according to the measured value scaling.

Mass measurement

- Start SIMATIC PDM. The measurement of mass is calculated from the volume and density. Therefore create an assignment between the pressure to be measured (measuring range) and the volume to be recorded (working range) by setting the following parameters:

> Input
> > Transducer block 1
Transmitter type: Volume
> > > Measuring range
Start of scale value
Full scale value
> > > Working range
Unit: Unit of volume [m^3, dm^3, cm^3, mm^3, l ...]
Start of scale value
Full scale value

- If there is no linear relationship between level and volume in your container, you can also define a characteristic curve:

> Input
> > Transducer block 1
Transmitter type: Volume
> > > Characteristic curve
Characteristic curve type: User-defined table
> > > Nodes
New number of nodes: max. 31
x[n] measurement range: Pressure value
y[n] working range: Corresponding volume value

- Create an assignment between the measured mass value and the output value by setting these parameters:

> Output
> > Function block 1 - analog input
Channel: Measured value (primary variable)
> > > Measured value scaling
Start of scale value: as in "working range"
Full scale value: as in "working range"
> > > Output scaling
Unit: Unit of mass [kg, g, t ...]
Start of scale value: as "measured value scaling" * density
Full scale value: as "measured value scaling" * density

You can also adjust the output to another process value. Assign the required unit to the parameters under the rubric output scaling. Assign the start of scale and full scale values according to the measured value scaling.

See also

Adjusting to a desired process value (Page 114)

7.4.5 Flow measurement

- Select the required configuration with the configuration tool:

Table 7- 6 Desired configuration for flow measurement

Desired configuration	Measurement type
Output	Current flow/time
Totalizer output	Volume or mass that has flowed over a time segment
Output, totalizer output	Current flow/time, volume or mass that has flowed over a time segment, reset totalizer output (with SIMATIC PDM)
Output, totalizer output, reset totalizer output	Current flow/time, volume or mass that has flowed over a time segment, Dosing

Desired configuration	Measurement type
Output, reset totalizer output, mode	Current flow/time, volume or mass that has flowed over a time segment, Dosing, Controlling the mode of the totalizer from the user program: Net, forward flow, reverse flow, hold totalizer count
Totalizer output, reset totalizer output	Volume or mass that has flowed over a time segment, Dosing
Totalizer output, reset totalizer output, mode	Volume or mass that has flowed over a time segment, Dosing, Controlling the mode of the totalizer from the user program: Net, forward flow, reverse flow, hold totalizer count

- Create a device with measurement type "Flow".
- Start SIMATIC PDM. Create an assignment between the pressure to be measured (measurement range) and the volume or mass flow to be recorded (working range), by setting these parameters:

> Input
> > Transducer Block 1
Transmitter type: Flow
> > > Measuring range
Start-of-scale value: 0
Final value
> > > Working area
Unit: Volume unit/time unit [m3/s, m3/h, l/s, ...]
Mass unit/time unit [kg/s, t/min, ...]
Start-of-scale value 0
Final value
> > > Characteristic curve
Characteristic curve type: Root extracted

- To acquire the current flow, use "Function Block 1 – Analog Input". Create an assignment between the measured flow value and the output value by setting these parameters:

> Output
> > Function Block 1 - Analog Input

Channel: Measurement value (primary variable)

> > > Measured value scaling
Start-of-scale value: as in "working range"
Final value: as in "working range"

> > > Output scaling
Unit: as in "working range"
Start value: as in "working range"
Final value: as in "working range"

- To acquire an amount that has flowed (mass or volume), use the totalizer function block.

> Output

> > Totalizer function block
Channel: Measurement value (primary variable)
Unit (totalizer)

- If your desired configuration does not include the mode settings (reset totalizer or mode), set the following parameters as well with SIMATIC PDM:

> Output

> > Totalizer function block

> > > Operating mode
Operating mode: [Pos. and neg. values | only positive values]
Totalizer output: Count

Application point of the root function, creep quantity suppression

If you want to suppress the error that occurs at low flow quantities, you have two options that you can also combine:

- The application point of the root function determines the point below which the root function becomes linear.
- Creep quantity suppression sets the measured flow quantity to 0, when the value falls below the preset limit.

Enter the application point as a % of the operating range (volume flow).

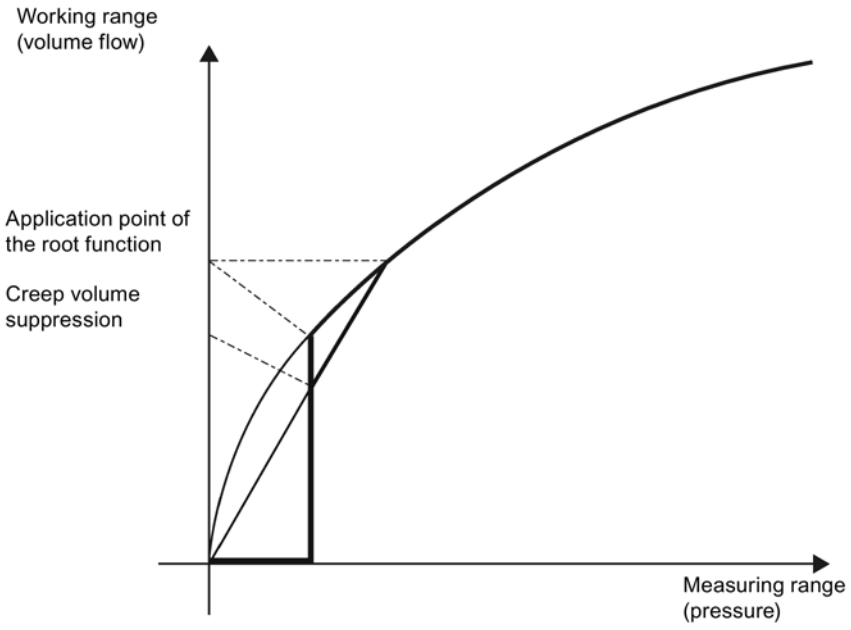

Image 7-7 Application point of the root function and creep quantity suppression

Flow measurement correction

If you want to carry out a correction in your application (for example to take account of the flow coefficient α and the expansion coefficient ε), select:

- Characteristic curve type: Root extracted and characteristic curve
- Nodes: For a maximum of 31 nodes, enter an input value (measured volume flow) and an output value (corrected volume flow).

See also

Configuration of user data (Page 165)

7.4.6 Adjusting to a desired process value

The analog input function block has the purpose of mapping the measured value to the process value. In general, you want to direct the measured value straight to the bus: Then the input and output range is taken from the working range.

If the measured pressure or the fill level has an indirect but linear relation to the process value, however, assign the start and final values of the input range to start and final values for the output range. The following examples illustrate this:

Procedure

The **procedure** is shown by means of two concrete application examples.

Example 1

You want to assign the input range 1 to 4 Pa to the output range 0 to 100%.

1. Set measurement type "Pressure".
2. Set the following parameters:

> Pressure transducer block

Unit for measured value (primary variable):	Pa

> Analog input function block

Input starting value:	1.0
Input final value:	4.0
Output starting value:	0.0
Output final value:	100.0
Unit (output):	%

Note

The display can only show a part of the ASCII character set in both upper and lower case. If you enter lower-case letters f, g, j, p, q, t, x, y, z in SIMATIC PDM in the parameter "Unit text (output)", they will only be shown in upper case. The German letters ä, ö, ü, and ß, as well as any ASCII characters with codes higher than 125, are displayed with a block symbol with all segments on. Thus try to avoid language-specific characters.

Example 2

You want to convert the input range 0 to 400 m^3 to 200 l barrels. The output range, for instance, is 0 to 2000 barrels.

1. Set measurement type "Volume".
2. Set the following parameters:

> Pressure transducer block

Unit for measured value (primary variable):	m^3

> Analog input function block

Input for start-of-scale value:	0.0
Input for final value:	400.0
Output for start-of-scale value:	0.0
Output for final value:	2000.0
Unit (output):	Text
Unit text (output):	Barrels

See also

Level measurement (Page 108)

Pressure measurement (Page 107)

7.5 Electrical damping (filter time constant)

You can set the time constant of electrical damping (filter time constant) to a point within a range of 0 to 100 seconds. It always applies to the "Pressure" device variable (DV0) and thus to the measured values derived from it.

See also

Setting/adjusting electrical damping (Page 79)

7.6 Key lock and write protection

You can set operation blocks according to the following table.

Table 7- 7 Keypad locks

Lock	Effect	Switching on/off	Display
Keypad and function block (hardware write protection)	Parameter changes with SIMATIC PDM and setting changes made locally are blocked. Independent of other operating locks.	Local Mode 10	L
Write block	Write block for parameterization using SIMATIC PDM. Local operation is possible. With PROFIsafe devices, password protection can be set for parameter modifications via bus. Refer to Write protection (Page 150).	SIMATIC PDM	LC
Local operation	If local operation is not enabled, no access is possible using the keypad. Regardless of the setting of this parameter, local operation is automatically enabled 30 seconds after loss of communication. After communication is restored, the "Local operation permitted" parameter is restored to its original setting in the device.	SIMATIC PDM	LA
Combination of write blocking and no enabling of local operation	Acts like an active keypad block. Changes to parameters (except for keypad block) are not possible either with local operation or using SIMATIC PDM.	SIMATIC PDM	LL

Blocks can also be combined:

Table 7- 8 Combined blocks

Lock	Write block for parameter changes over the bus	Release of local operation over SIMATIC PDM	Display
On	On or off	Released or blocked	L
Off	Off	Blocked	LA
Off	Off	Released	- -
Off	On	Blocked	LL
Off	On	Released	LC

See also

Locking of buttons and functions (Page 81)

7.7 Warning and alarm limits

The analog input function blocks each have high and low warning and alarm limits for the output. In order to avoid unstable display of warnings and alarms, specify a hysteresis.

In the analog input function blocks, set the following parameters according to process requirements:

- Limit value hysteresis
- High warning limit
- High alarm limit
- Low warning limit
- Low alarm limit

Status

If limits are violated, the output is accompanied by a status which you can evaluate in your application program:

Table 7- 9 Limits and status displays

Status Display	Status Hex	Violation
G_137	89	Low warning limit
G_138	8A	High warning limit
G_141	8D	Low alarm limit
G_142	8E	High alarm limit

Example

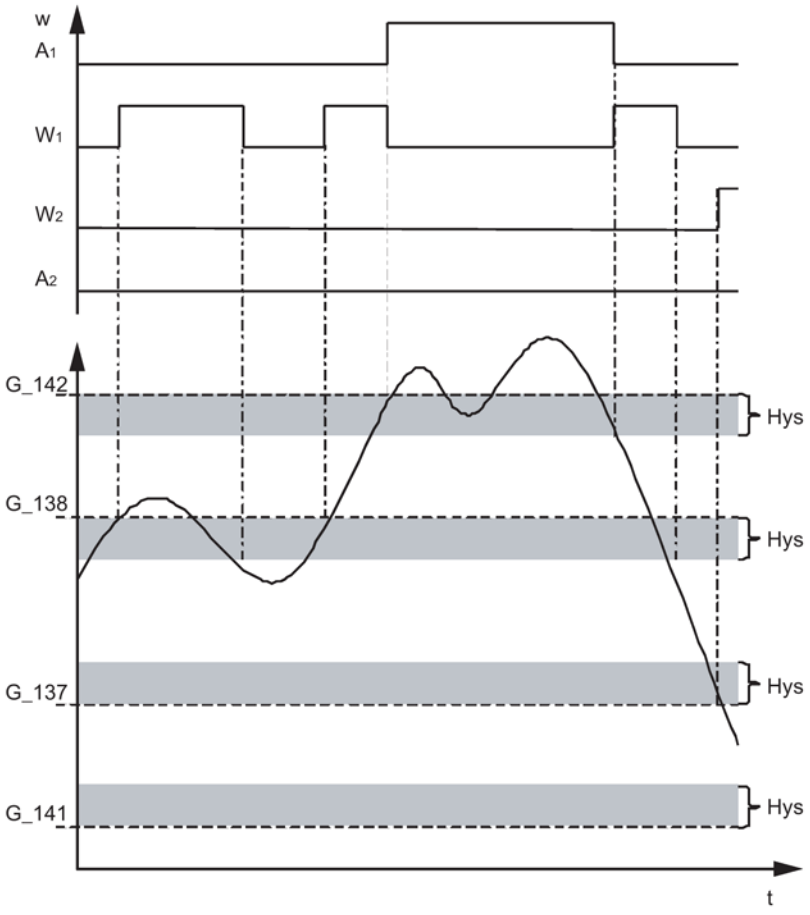

G_137	Low warning limit	A_1	High alarm
G_138	High warning limit	A_2	Low alarm
G_141	Low alarm limit	W_1	High warning limit
G_142	High alarm limit	W_2	Low warning limit
		Hys	Hysteresis
t	Time	w	Measured value

Image 7-8 Warning and alarm limits

7.8 Failure behavior

7.8.1 Overview of failure behavior

If the transducer block fails, the analog input and totalizer function blocks can adopt a value preset by the user. If the output variables of the transducer block have the status "Bad" due to an error, activate the failure behavior for the function blocks. The status "Unsure" then accompanies the output or the totalizer output.

7.8.2 Output

Set the failure behavior in the analog input function block:

Table 7- 10 Failure behavior of the analog input function block

Failure behavior	Description	Status code
The output value is set to the replacement value.	The predefined safety preset value is output.	U_075
Saving of the last valid output value.	The last valid output value is output.	U_071
The incorrectly calculated measured value is on the output (shutdown logic turned off).	The bad output value is accompanied by the status assigned to it by the transducer block.	B_0xx

To narrow down the cause of failure after the shutdown logic engages, read the measured value (primary variables) or secondary variables including the status from SIMATIC PDM.

7.8.3 Totalizer output

Set the failure behavior in the totalizer function block:

Table 7- 11 Failure behavior of the totalizer function block

Failure behavior	Description	Status code
Stop	Counting is stopped if there are input values with the "Bad" status.	U_075
Safe operation	Counting continues with the last input value that had the "Good" status prior to the failure.	U_072
Operation	The bad measured value is accompanied by the status assigned to it by the transducer block.	B_0xx

7.9 Diagnostics functions

7.9.1 Operating hours counter

You can read out one operating hours counter for the electronics and one for the sensor. They are activated upon first commissioning of the pressure transmitter.

7.9.2 Calibration interval and service interval

There are two timers in the pressure transmitter:

- A timer for the calibration interval, which ensures regular calibration of the electronics.
- A timer for the service interval, which draws attention to any necessary service for the sensor cell and its connections.

The interval is selectable. The timers can monitor on two levels, first giving a warning, then an alarm.

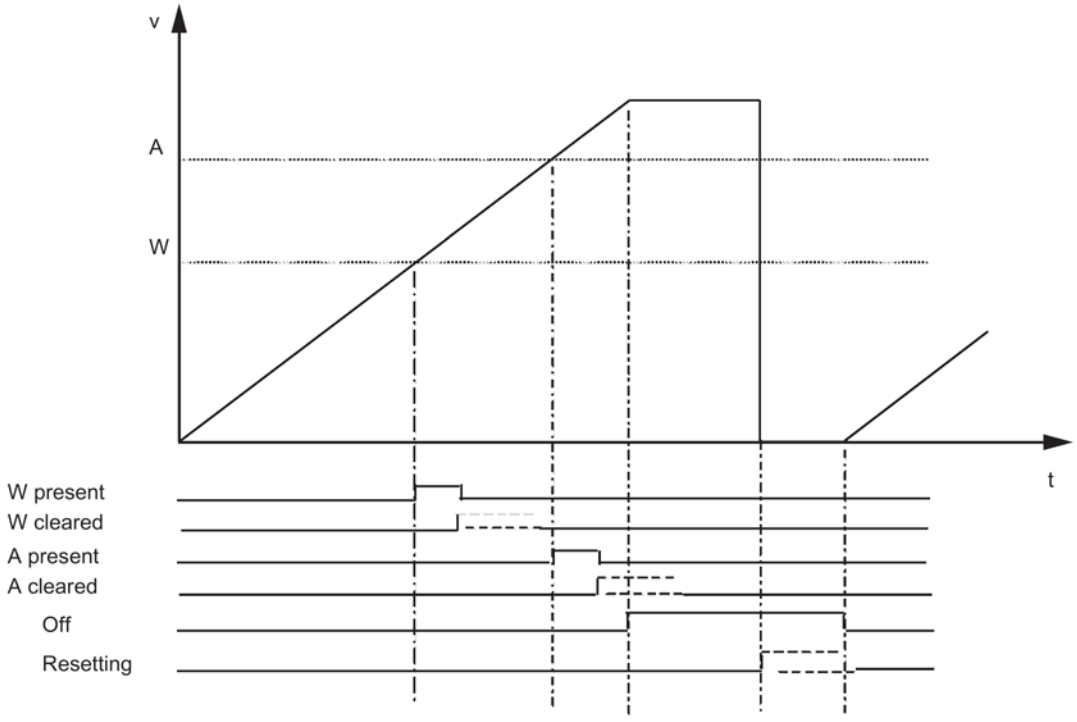

Image 7-9 Calibration and service intervals

v	Timer value	t	Time
A	Interrupt	W	Warning

Procedure

To adjust the calibration and service interval, proceed as follows:

1. Set the parameter for warning/alarm.
2. Give the time interval after which a warning is output.
3. Give the additional time interval after which an alarm is output.

7.9.3 Clearing warning

As soon as the warning interval is past, the first monitoring level emits a warning. Measured values have the status "Good, Maintenance request". The "Maintenance request" diagnostics alarm is also displayed. SIMATIC PDM can also display the status for calibration or service and the value of the timer.

Procedure

To clear a warning, proceed as follows:

1. Clear the warning.

   The diagnostic message is deleted and the status set back to "Good".
2. Perform the calibration or service.
3. Reset the timer.

7.9.4 Clearing the alarm

If you don't perform calibration or service on time, the second monitoring level emits an alarm which again draws attention to the urgent need for service. Measured values are accompanied by the status "Unsure, value inexact" and the diagnostic message "Service required" is displayed.

Procedure

To clear an alarm, proceed as follows:

1. Clear the alarm.

   The diagnostic message is deleted and the status set back to "Good".
2. Perform the calibration or service.
3. Reset the timer.

7.9.5 Min/max indicator

Description

The pressure transmitter has three pairs of min/max pointers which you can use to monitor the three measured variables pressure, sensor temperature, and electronics temperature for negative and positive peak values. For each measured value, a resettable min/max pointer saves the maximum and minimum peak values in long-term storage in the two non-volatile memories. Consequently, the values are available even after the device is restarted. The min/max pointers are also updated during a simulation.

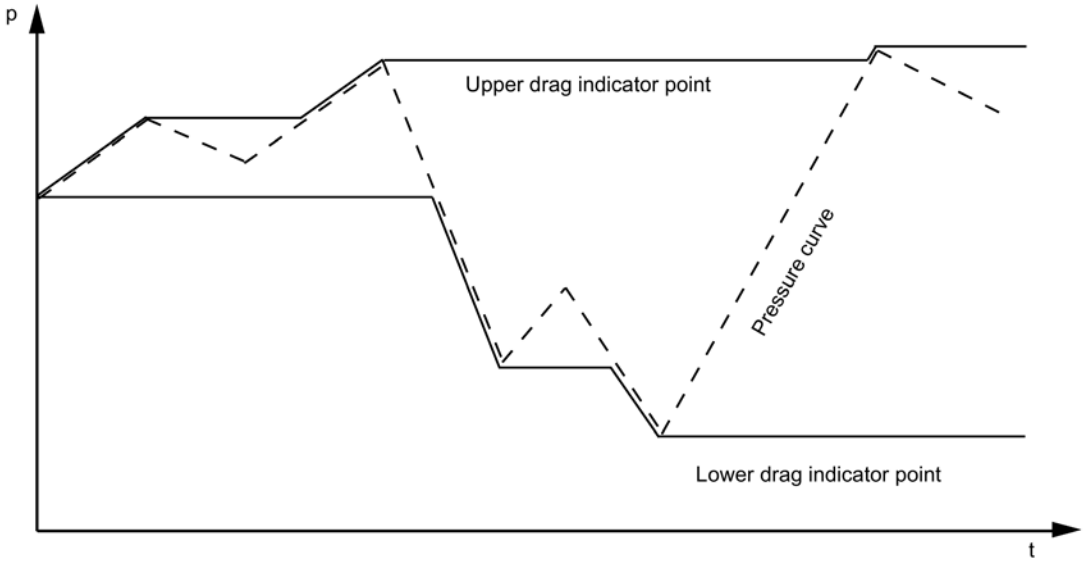

p Pressure

Image 7-10 Basic representation of min/max pointers

See also

Simulating the pressure sensor (Page 124)

Simulating sensor and electronics temperature (Page 125)

7.10 Simulation

7.10.1 Overview of simulation

Simulation functions help you when commissioning parts of the system and the pressure transmitter. You can generate process values without recording real measured values. The value range of simulated process values can be tested fully: This makes the simulation of errors possible.

From the output of the pressure transmitter, you can get ever closer to the sensor and check the measurement and function blocks.

The display indicates active simulation with an "Si" in the mode display.

7.10.2 Simulating output

By simulating the output, you can make process values available at the output of the pressure transmitter for cyclic data transmissions using acyclic write access. This allows you to test the process value processing in the automation program.

Procedure

To simulate the output, make the following settings:

1. Select output simulation.
2. Set the target mode to manual (MAN).
3. Enter the desired output value, the quality, and the status.
4. Transmit the settings from the program into the pressure transmitter.

The behavior of the output can be observed, e.g. in SIMATIC PDM or using a variable table (VAT component).

To return to normal operation afterwards, set the target mode to AUTO.

7.10.3 Simulating input

By simulating the input, you can check the following functions:

- Adaptation of the measured value to the required process variable
- Monitoring of the process limits you have set
- Electrical damping
- Response to failure

Procedure

To simulate the input, make the following settings:

1. Select input simulation.
2. Set the target mode to AUTO.
3. Select the simulation mode "Released".
4. Enter the desired input value, the quality, and the status.
5. Transmit the settings from the program into the pressure transmitter.

You can observe the behavior of the input in e.g. SIMATIC PDM.

To return to normal operation afterwards, you must switch off the simulation.

7.10.4 Simulating the pressure sensor

By simulating the pressure sensor as a fixed value or a parameterizable ramp, you can check the following functions:

- Trim
- Check the zero-point adjustment
- Reaction to violation of sensor limits
- Linearization
- Projection onto the working range

You can make the simulation value dynamic with a parameterizable ramp. The simulation value then goes from a start value (v_1) in a step function to a full-scale value (v_2), staying at each level for the given step interval (t_v). At the full-scale value, the direction reverses.

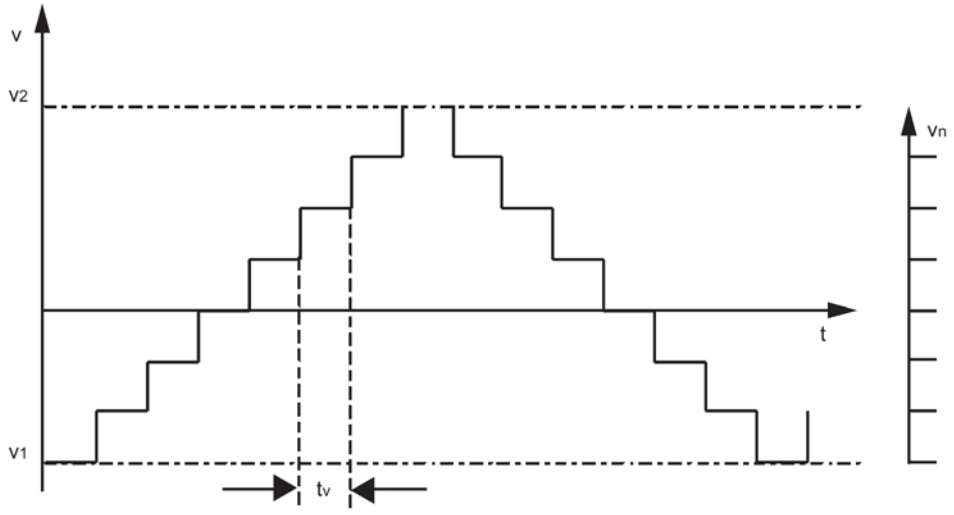

Image 7-11 Parameterizable ramp

v	Value	t	Time
v_1	Start value	t_v	Step interval
v_2	Full-scale value	v_n	Number of steps

Procedure

To simulate the pressure sensor, make the following settings:

1. Select pressure sensor simulation.
2. Set the simulation mode and the parameters:
   - Simulation mode "Fixed" and parameter pressure value
   - Simulation mode "Ramp" and ramp parameters
3. Transmit the settings from the program into the pressure transmitter.

The behavior of the measured value (primary variable), the secondary variables 1, 2, and 3, and of the output, can be observed in SIMATIC PDM.

To return to normal operation afterwards, you must switch off the simulation.

7.10.5 Simulating sensor and electronics temperature

By simulating the sensor and electronics temperature you can, for instance, check the influence of excessive temperature on the measurement results:

Procedure

To simulate the sensor and electronics temperature, make the following settings:

1. Select the simulation of sensor or of the electronics temperature.
2. Set the simulation mode and the parameters:
   - Simulation mode "Fixed" and parameter pressure value
   - Simulation mode "Ramp" and ramp parameters
3. Transmit the settings from the program into the pressure transmitter.

The behavior of the measured value (primary variable), the secondary variables 1, 2, and 3, and of the output, can be observed in SIMATIC PDM.

To return to normal operation afterwards, you must switch off the simulation.

7.11 Calibrating the sensor

Sensor calibration enables you to calibrate the pressure transmitter. Analogous to modes 19 and 20 for local operation, you can change the slope of the characteristic curve of the pressure transmitter.

Using a lower and an upper trim point, you can determine the course of the characteristic curve.

Change the slope of the characteristic to a minimum of 0.9 and a maximum of 1.1. Any larger variation from a slope of 1.0 will prevent the respective trim point from being stored.

The lower trim point must be far enough from the upper trim point so that the smallest calibration span is included.

The smallest calibration span is displayed in the sensor calibration dialog and depends on the measurement range. If the calibration is smaller than the smallest span, the following status code accompanies the measured value:

"Bad, configuration error"

In this case, recalibration the lower or the upper sensor trim point with a sufficiently large calibration span.

Calibrating the lower point

To calibrate the lower point, proceed as follows:

1. Call up the dialog "Sensor Trim".
2. Apply the reference pressure for the lower sensor trim point.
3. Enter the value of the reference pressure in the field "Lower Sensor Trim Point".
4. Click on "Transfer".

In the field "Pressure cleaned raw value", observe the effect of the calibration. In the "Lower Sensor Trim Point" box, you can see whether the new trim point was applied.

Calibrating the upper point

To calibrate the upper point, proceed as follows:

1. Call up the dialog "Sensor Trim".
2. Switch to the "Upper Sensor Trim" tab.
3. Apply the reference pressure for the upper sensor trim point.
4. Enter the value of the reference pressure in the field "upper sensor trim point".
5. Click on "Transfer".

In the field "Pressure cleaned raw value", observe the effect of the calibration. In the "Upper Sensor Trim Point" box, you can see whether the new calibration point was applied.

After both points have been calibrated, the status of the measured value must be "Good". If the status "Bad, configuration error" is displayed, the calibration was smaller than the smallest calibration span. You must move the trim points away from one another by moving one of the two trim points.

See also

LO calibration (Page 91)

HI calibration (Page 92)

7.12 Correcting for positional error

External influences can affect the original zero point. External influences include:

- Mounting position
- Ambient temperature
- Installation-caused preset pressures, for instance fluid columns in the pressure line to the pressure transmitter
- The screw-mounting on the process plant, e.g. measuring ranges from 1 to 20 mbar (differential pressure), can respond more sensitively to the screw-mounting.

You can correct for these influences within the following limits.

Differential pressure	-100% to +100% of the rated measuring range
Pressure	-100%, but not more than -1 bar
	up to +100% of the nominal measurement range
Absolute pressure	Correction for positional error not possible

Procedure

To correct for positional error, proceed as follows:

1. Call up the dialog "Position correction".
2. Create a pressure calibration.
3. Click on "Transfer".

7.13 Reset

7.13.1 Resetting to delivery state

If the pressure transmitter is so maladjusted that it can no longer fulfill its measurement tasks, you can use this function to reset it to the factory settings. It resets all parameters to the factory settings, with a few exceptions.

The exceptions are:

- PROFIBUS address
- Device operation type
- Static version number
  - In Transducer Block 1
  - In the analog input function block

The reset is indicated by the diagnostic message "New start executed". The automation or control system reads the status "Unsure, initial value, value constant" until a measured value result is available.

See also

Resetting the PROFIBUS address (Page 128)

Device operation type (Page 88)

7.13.2 Warm start/restart

With a warm start, you cause the pressure transmitter to switch itself off and restart. This interrupts and then reestablishes communication.

You need this function, for example, if the PROFIBUS address is changed during running communication with a cyclical master.

This restart is indicated by the diagnostic message "Restart executed". The automation or control system reads the status "Unsure, initial value, value constant" until a measured value result is available.

7.13.3 Resetting the PROFIBUS address

If no other pressure sensor in your system has the preset address 126, you can add your pressure transmitter to the PROFIBUS strand during running operation of the automation or control system. You must subsequently change the address of the newly connected device to a different value.

If you remove the pressure transmitter from the PROFIBUS chain, reset its address to 126. This allows you to include the pressure transmitter in this or another system if necessary.

Functional safety

8

8.1 Safety function

The safety function of SITRANS P DS III with PROFIsafe protocol (ordering option -Z C21) is based on the measurement of pressure.

The pressure is converted to a digital measured value and transmitted via PROFIsafe communication. Fault tolerance allowances must be made, because the measured value transferred to the automation system by the pressure transmitter can deviate from the physical value. This fault tolerance is calculated as follows:

Total tolerance (safety function) = ± [application-specific measurement error + 2 % safety accuracy].

Pressure transmitter safety accuracy: the maximum effect of a non-critical individual error on the measured value.

The measured value is transferred along with the "Validity" and "Quality" status information.

The diagnostics function will respond within 60 seconds in the worst-case scenario.

The safety accuracy together with the application-specific measurement error allows the system operator to include a backup for process monitoring. Even if a random individual error occurs that is within the safety accuracy, the system can still be safely shut down.

As there is also always a possibility of dangerous faults occurring, these are categorized and listed in the manufacturer declaration for the device (SIL declaration of conformity, functional safety pursuant to IEC 61508 and IEC 61511).

Example:

A silo is to be securely monitored to check that the level does not exceed 10 meters.

Application-specific measurement error: 0.1%

Safety accuracy: 2.0%

Total tolerance: 2.1%

2.1% of 10 meters is 21 centimeters. If process monitoring is set to 9.79 meters, safe shutdown is guaranteed even in the event of a random individual error within the safety accuracy.

Note

Use of remote seals

If remote seals are used, the application-specific measurement error is the product of the pressure transmitter and remote seal measurement errors.

WARNING
Disregarding conditions for fulfilling the safety function Disregard can result in a malfunction of the process plant or application, e.g. process pressure too high, maximum level exceeded. The mandatory settings and conditions are listed in chapters "Settings (Page 132)" and "Safety-related characteristics (Page 132)". Please observe the applicable conditions to ensure the safety function.

Safety-instrumented system in single-channel operation (SIL 2)

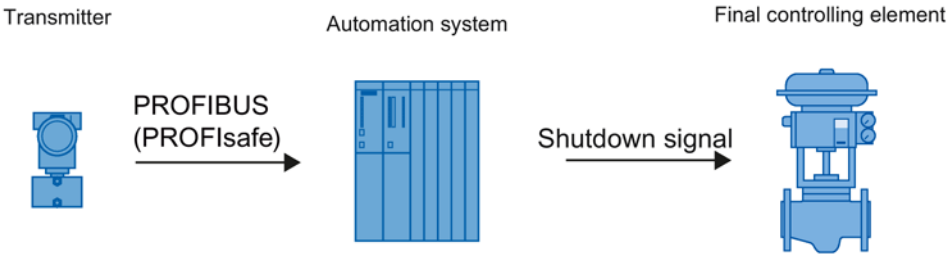

Image 8-1 Safety-related system for pressure transmitters in single-channel operation

The combination of pressure transmitter, automation system and final controlling element forms a safety-instrumented system that performs a safety function. The emphasis of this description is on the pressure transmitter. For information on requirements for the automation system or final controlling element, please refer to the corresponding standards.

The pressure transmitter generates a process-related measured value that is transferred to the automation system. The automation system monitors this measured value. If the measured value violates the high or low limit, the automation system generates a shutdown signal for the connected final controlling element, which switches the corresponding valve to the specified safety position.

Only one SITRANS P DS III device is required for single-channel operation for SIL 2.

8.2 Safety Integrity Level (SIL)

The international standard IEC 61508 defines four discrete Safety Integrity Levels (SIL) from SIL 1 to SIL 4. Every level corresponds to a probability range for the failure of a safety function.

Description

The following table shows the dependency of the SIL on the "average probability of dangerous failures of a safety function of the entire safety-instrumented system" (PFD_{AVG}). The table deals with "Low demand mode", i.e. the safety function is required a maximum of once per year on average.

Table 8- 1 Safety Integrity Level

SIL	**Interval**
4	$10^{-5} \leq PFD_{AVG} < 10^{-4}$
3	$10^{-4} \leq PFD_{AVG} < 10^{-3}$
2	$10^{-3} \leq PFD_{AVG} < 10^{-2}$
1	$10^{-2} \leq PFD_{AVG} < 10^{-1}$

The "average probability of dangerous failures of the entire safety-instrumented system" (PFD_{AVG}) is normally split between the following three components:

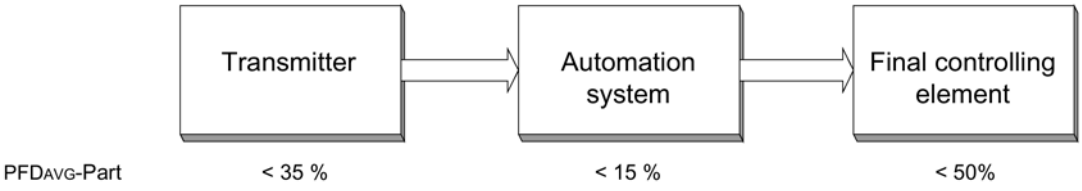

Image 8-2 PFD distribution

The following table shows the achievable Safety Integrity Level (SIL) for the entire safety-instrumented system for type B devices depending on the safe failure fraction (SFF) and the hardware fault tolerance (HFT).

- Type B devices include analog transmitters and shut-off valves **with** complex components, e.g. microprocessors (also see IEC 61508, Section 2).
- For detailed information on values and hardware/firmware versions for your device, refer to the manufacturer declaration for the device (Declaration of Conformity, Functional Safety according to IEC 61508 and IEC 61511): Certificates (http://www.siemens.com/processinstrumentation/certificates).

SFF	**HFT for type B devices**		
	0	**1 (0) [1]**	**2 (1) [1]**
< 60 %	Not permitted	SIL 1	SIL 2
60 to 90 %	SIL 1	SIL 2	SIL 3
90 to 99 %	SIL 2	SIL 3	SIL 4
> 99 %	SIL 3	SIL 4	SIL 4

[1] Operational reliability in accordance with IEC 61511-1, Section 11.4.4

Operational reliability

According to IEC 61511-1, Section 11.4.4, the hardware fault tolerance (HFT) can be reduced by one (values in brackets) for transmitters and final controlling elements with complex components if the following conditions apply to the device:

- The device is proven in operation.
- The user can configure only the process-related parameters, e.g. control range, signal direction in case of a fault, limiting values, etc.
- The configuration level of the firmware is blocked against unauthorized operation.
- The function requires SIL of less than 4.

See also

General functional safety (http://www.siemens.com/safety)

Functional safety in process instrumentation (http://www.siemens.com/SIL)

8.3 Settings

Introduction

When using the device for functional safety, follow these steps:

Procedure

1. Setting safety-relevant parameters (Page 144)
2. Checking the safety function (Page 134)
3. Enabling write protection (Page 150)

8.4 Safety-related characteristics

The safety characteristics necessary for using the system are listed in the "SIL Declaration of Conformity". These values apply under the following conditions:

- SITRANS P DS III pressure transmitters are only used in applications with a low demand rate for the safety function (low demand mode).
- The safety-relevant parameters/settings were entered before the safety-instrumented operation via PROFIBUS communication. Check the safety-relevant parameters/settings by means of PDM; refer to chapter "PROFIsafe Configuration (Page 144)".
- The safety function test has been concluded successfully.
- The pressure transmitters are protected from accidental and unauthorized changes/operation.

- Fault rates are calculated on the basis of a mean time to repair (MTTR) of eight hours (order option C21).
- Only one SITRANS P DS III device is required for single-channel operation in accordance with SIL 2.
- Secure data transmission is only guaranteed when using a PROFIsafe master.

8.5 Maintenance/check

8.5.1 Overview

Checking safety

Check the safety function of the entire safety circuit on a regular basis in accordance with IEC 61508/61511. The test intervals are determined in the course of calculations for each safety circuit of a system (PFD_{AVG}).

Checking safety function/proof test

Runs this test to detect hidden serious faults of the pressure transmitter.

Hidden faults result in incorrect measurements and dangerous failures in your safety-related system.

If necessary, replace the pressure transmitter.

Enabling write protection

After parameter assignment/commissioning as well as after a proof test, perform the following steps:

1. Disable the write protection. For this purpose you have various options, which are described in the section "Write protection (Page 150)".
2. Protect the keys from unintended change in the parameters, e.g. by selecting the key lock or function lock (Mode 10).

Electronics and measuring cell

The safety function of the pressure transmitter is ensured only if you use the electronics, measuring cell, display and connection board delivered by the factory. These components cannot be replaced.

8.5.2 Checking safety function/proof test

Requirement

- You should preferably check the safety function while the device is installed. If this is not possible, you can also check the safety function when the device is not installed. Make sure that the pressure transmitter is mounted in the same position for testing as it is in the system.
- Observe the information in the section Write protection (Page 150).
- If you are using add-on parts, also see the tests in section Add-on parts (Page 140).

Procedure

1. Make sure that the test does not inadvertently result in an emergency shutdown of the system.
2. Make sure that there are no active warnings or error messages.
3. Check temperature sensors (Page 135).
4. Check response time of pressure transmitter (Page 135).
5. Conduct a two-point measurement:

   Two-point measurement ≥ 10% of the maximum measuring range. (Page 135)

   - or -

   Two-point measurement ≥ 50% of the maximum measuring range. (Page 138)
6. Make sure that the pressure transmitter is in measuring mode.
7. After the test, make sure that the emergency shutdown of the system is working again.
8. Disable the write protection.

Result

If you are conducting the test as described, you will detect dangerous faults to a certain degree that are not detected by runtime diagnostics:

- With two-point measurement ≥ 10% of the maximum measuring range: 89% of the faults are detected.
- With two-point measurement ≥ 50% of the maximum measuring range: 98% of the faults are detected.

Interval

- Check the pressure transmitter regularly for proper function (proof test) to detect influences which could reduce the functionality of the pressure transmitter in time.
- Select the interval according to the process and ambient conditions of the installation location of the pressure transmitter.

Note

For a safety-instrumented system, we recommend checking the device at regular intervals of one year.

8.5.2.1 Checking temperature sensors

Procedure

- Read the sensor temperature and the electronics temperature via communication.
- Check whether the measured sensor temperature is within the range of -50 °C to 120 °C.
- Check whether the measured electronics temperature is within the range of -50 °C to 90 °C.

If the measured temperatures are not within this range, the temperature sensor is defective.

8.5.2.2 Check response time of pressure transmitter.

Procedure

To check whether the response time of the pressure transmitter meets the requirements of the process plant, follow these steps:

- Change the pressure at the input abruptly from a base value by ≥ 10% of the maximum measuring range and check the measured values that result from this.

  Note that the set damping can affect the damping of the response time of the pressure transmitter.

8.5.2.3 Two-point measurement ≥ 10% of the maximum measuring range

General procedure

Requirement

The difference between the first input pressure and the second input pressure is ≥ 10% of the maximum measuring range.

Checking the measuring range

1. Apply an initial input pressure.
2. Check the transferred value.

3. Apply a second input pressure.
4. Check the transferred value.

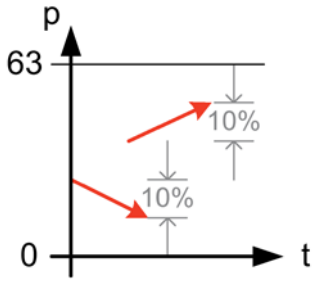

Image 8-3 Example of two-point measurement 10%

Procedure for monitoring a minimum pressure

Checking monitoring of a minimum pressure

1. Check the monitoring of the minimum pressure with the threshold defined in the system.
2. Apply an input pressure value that is above the threshold.
3. Apply an input pressure value that is ≥ 1% of the maximum measuring range below the threshold.

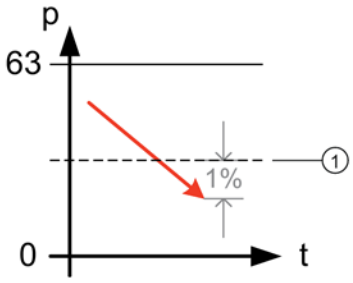

① Threshold

Image 8-4 Example of monitoring of a minimum pressure

Procedure for monitoring a maximum pressure

Checking monitoring of the maximum pressure

1. Check the monitoring of the maximum pressure with the threshold defined in the system.
2. Apply an input pressure value that is below the threshold.
3. Apply an input pressure value that is ≥ 10% of the maximum measuring range above the threshold.

Note

Step 3 can only be performed if the maximum limit value is ≥ 10% below the maximum full scale value. Otherwise, check only up to full scale value.

However, the test range must be ≥ 10% of the maximum measuring range.

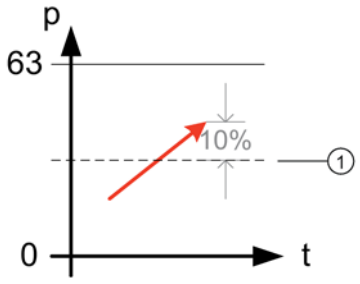

① Threshold

Image 8-5 Example of monitoring of a maximum pressure

Result

The two-point measurements are successful when the deviation between input pressure and transferred value is ≤ 0.2%.

Negative measurement result

If the two-point measurements of the pressure transmitter were not successful, the SIL level is no longer guaranteed.

- Replace the pressure transmitter.

8.5.2.4 Two-point measurement ≥ 50% of the maximum measuring range

General procedure

Requirement

The difference between the first input pressure and the second input pressure is ≥ 50% of the maximum measuring range.

Checking monitoring of the maximum measuring range

1. Apply an initial input pressure.
2. Measure the transferred value.
3. Apply a second input pressure.
4. Measure the transferred value.

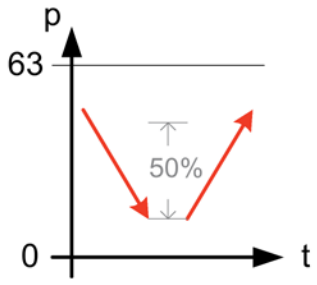

Image 8-6 Example of two-point measurement 50%

Procedure for monitoring a minimum pressure

Checking monitoring of a minimum pressure

1. Check the monitoring of the maximum pressure with the threshold defined in the system.
2. Apply an input pressure value that is above the threshold.
3. Apply an input pressure value that is ≥ 1% of the maximum measuring range below the threshold.

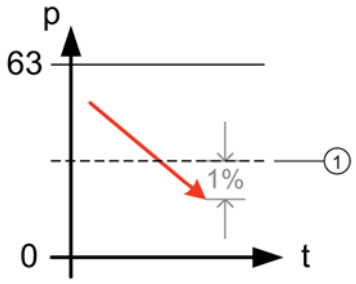

① Threshold

Image 8-7 Example of monitoring of a minimum pressure

Procedure for monitoring a maximum pressure

Checking monitoring of the maximum pressure

1. Check the monitoring of the maximum pressure with the threshold defined in the system.
2. Apply an input pressure value that is below the threshold.
3. Apply an input pressure value that is ≥ 10% of the maximum measuring range above the threshold.

Note

Step 3 can only be performed if the maximum limit value is ≥ 10% below the maximum full scale value. Otherwise, check only up to full scale value.

However, the test range must be 50% of the maximum measuring range.

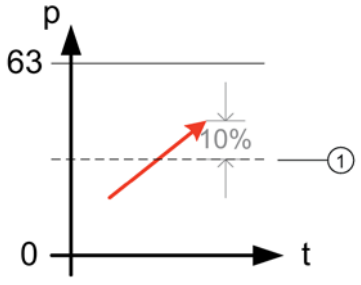

① Threshold

Image 8-8 Example of monitoring of a maximum pressure

Result

The two-point measurements are successful when the deviation between input pressure and transferred value is ≤ 0.2%.

Negative measurement result

If the two-point measurements of the pressure transmitter were not successful, the SIL level is no longer guaranteed.

- Replace the pressure transmitter.

8.5.2.5 Checking pressure transmitter for external damage

- Make sure that the terminal compartment is dry.
- Make sure that the enclosure and the process connections do not have any leaks through which the filling oil or the process medium could escape.
- Check the enclosure for critical damages.
- Make sure that the connecting cable is plugged in correctly and that it is not damaged.

8.6 Add-on parts

This chapter contains safety information for add-on parts.

⚠ WARNING

Add-on parts unsuitable for process medium

Danger of injury or damage to device.

If the process medium is not suitable for the parts which come into contact with it, hot and/or toxic or corrosive substances could be released.

- Refer to the information in the chapter "Technical data (Page 193)".
- Make sure that the add-on parts are suitable for the corresponding application with regard to materials, temperature of process medium, and pressure.

8.6.1 Checking a device with add-on pneumatic block

Procedure

1. Check the connection between the pressure transmitter and pneumatic block and between the pneumatic block and pipelines in the plant for leaks.
2. Observe the safety information and specifications in chapter Installing / mounting (Page 39).

3. Check the following valves for correct positioning and absence of leaks:
   - Process valves
   - Stabilizing valve
   - Vent valves
   - Blowout valves or plugs
4. Observe the safety information and specifications in chapter Commissioning (Page 171).

8.6.2 Checking a device with add-on remote seal

Procedure

1. Check the connection between the pressure transmitter and remote seal and between the remote seal and the plant for leaks.
2. Observe the safety information and specifications in chapter Installing / mounting (Page 39).

8.7 PROFIsafe

8.7.1 Introduction

PROFIsafe enables safe communication by detecting and reporting all communication errors. Data security is continuously monitored on the PROFIBUS in the process.

8.7.2 Technical advantages of PROFIsafe

The main advantage of PROFIsafe is that the PROFIBUS communication channel becomes secured by a protocol in a transparent way. Thus incorrect values cannot be transferred to the master without being discovered. The user does not need any special network components. All the user needs is the standard network components of PROFIBUS. However, the CPU must be suitable for safety applications.

In the following example, you see that PROFIsafe and PROFIBUS devices can be operated simultaneously on a PROFIBUS network.

Note

PROFIsafe devices can only be operated with the S7 F Systems V6.1 configuration software in combination with S7-400H.

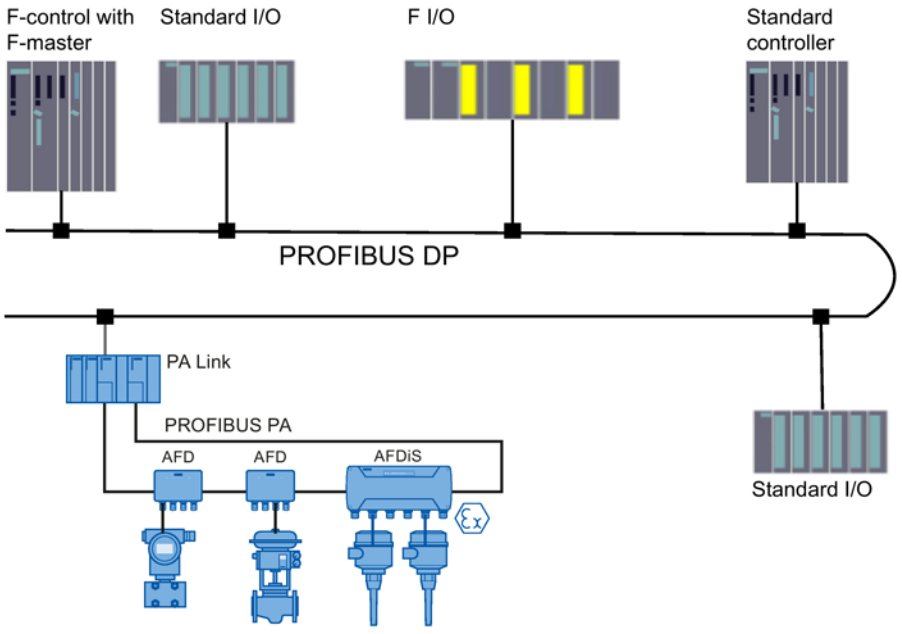

Image 8-9 Example of PROFIsafe communication

See also

PI PROFIBUS - PROFINET (http://www.profibus.com/home/)

8.7.3 Further information

Standards

The PROFIsafe protocol was developed while taking the international standard IEC 61508 into account. The IEC 61508 governs the requirements for the functional safety of products and systems. The use of the IEC 61508 in the process industry is described in the application-specific standard IEC 61511.

Safety levels

The device meets the requirements of Safety Integrity Level 2 (SIL).

Note

You will find more information on safety engineering and installing PROFIsafe in the document "Safety Engineering in SIMATIC S7".

See also

General functional safety (http://www.siemens.com/safety)

Functional safety in process instrumentation (http://www.siemens.com/SIL)

Product information on SITRANS P in the Internet (http://www.siemens.com/sitransp)

8.7.4 Preconditions

CPU

The CPU must be capable of operating in fail-safe mode to be able to communicate with PROFIsafe devices.

These F-CPUs are contained in the catalog ST 70, SIMATIC S7.

Electronic Device Description (EDD):

Operate your application in conjunction with the EDD and GSD of SITRANS P, series DSIII PA PROFIsafe in the following system environment:

- with EDD version 01.02.01-53 with GSD "SI0180A6.GSD revision 1.03"
  - PCS 7 V7.0 and F systems V5.2SP4 with library Failsafe Blocks (V1_2) or
  - PCS 7 V7.0 and F systems V6.0 with library Failsafe Blocks (V1_2) or
- EDD version 01.02.02 or higher with GSD "SI0180A6.GSD revision 1.04" with PCS 7 V7.0 SP1 and F systems V6.0 with library S7 F Systems Lib V1_3
- EDD version 01.02.03 or higher with GSD "SIEM8170.GSD revision 1.0" with PCS7 V7.1 SP3 and F systems V6.1 with libraryS7 F Systems Lib V1_4

Note

With this EDD, the "PROFIBUS Ident number" parameter can be set to manufacturer-specific (3.01), PROFIsafe V1/V2

PROFIsafe device

For safety reasons, the PROFIsafe device ships with default settings. This means PROFIsafe is deactivated. You activate PROFIsafe with the PROFIsafe commissioning.

Technical requirements for PROFIsafe:

- SIMATIC PDM HF1
- EDD from 01.02.01
- Firmware from 301.02.01

8.7.5 PROFIsafe Configuration

For safety reasons, the PROFIsafe device ships with default settings.

Requirement

Before you commission the PROFIsafe device, configure it, for example in STEP 7.

Process

Import EDD with SIMATIC PDM (Page 145)

Configure CPU with HW Config (Page 145)

Configure device with HW Config (Page 145)

Configure CFC (Page 148)

8.7.5.1 Import EDD with SIMATIC PDM

To import the EDD, click on "SIMATIC PDM" > "Manage Device Catalog".

8.7.5.2 Configure CPU with HW Config

The relevant settings for fail-safe of the CPU are located in the CPU-specific documentation.

Procedure

If your CPU is a SIMATIC CPU, proceed as follows:

1. Double click on the CPU.
2. You are now in the "Properties" dialog box on the "Protection" tab. Activate the following checkboxes:
   - Protection level "1"
   - "Removable with password"
   - "CPU contains safety program"

8.7.5.3 Configure device with HW Config

Procedure

1. You are in the "Catalog" view with the "standard" profile. Go to the device in the catalog:
   - "PROFIBUS-PA > Sensors > Pressure > SIEMENS > SITRANS P DSIII PROFIsafe" valid for firmware 0301.02.01 and 0301.02.02
   - "PROFIBUS-PA > Sensors > Pressure > SIEMENS > SITRANS P DSIII PROFIsafe V2"
     valid as of firmware 0301.02.03

   Note

   You will find the valid firmware version on the label and can then select the correct GSD file for your version.

2. Pull the following device onto "PA Master System" with Drag & Drop.
   The "Properties" dialog then opens.

3. Set the PROFIBUS address.
   The device is displayed in HW Config with the default configurations.
4. Delete the default module of the device at Slot 1.
5. You are now in the "Catalog" view. For the PROFIsafe device, select the fail-safe-compliant configuration "F:Pressure\Level\Flow\Temp".
6. Drag the F-module to slot 1.
7. Open the "PROFIsafe" tab in the "Properties - DP slave" dialog of the catalog.
8. Check the PROFIsafe address, parameter "F_Dest_ADD".

   Note:

   You must set the PROFIsafe address, parameter "F_Dest_ADD" to the same value later using the PDM table in the device.
9. Valid as of firmware 0301.02.03:
   Select the PROFIsafe protocol version V1 or V2 with which the device will work.
   - crc length = 3, F-Par-Version = 1 → V2 PROFIsafe protocol
   - crc length = 2, F-Par-Version = 0 → V1 PROFIsafe protocol

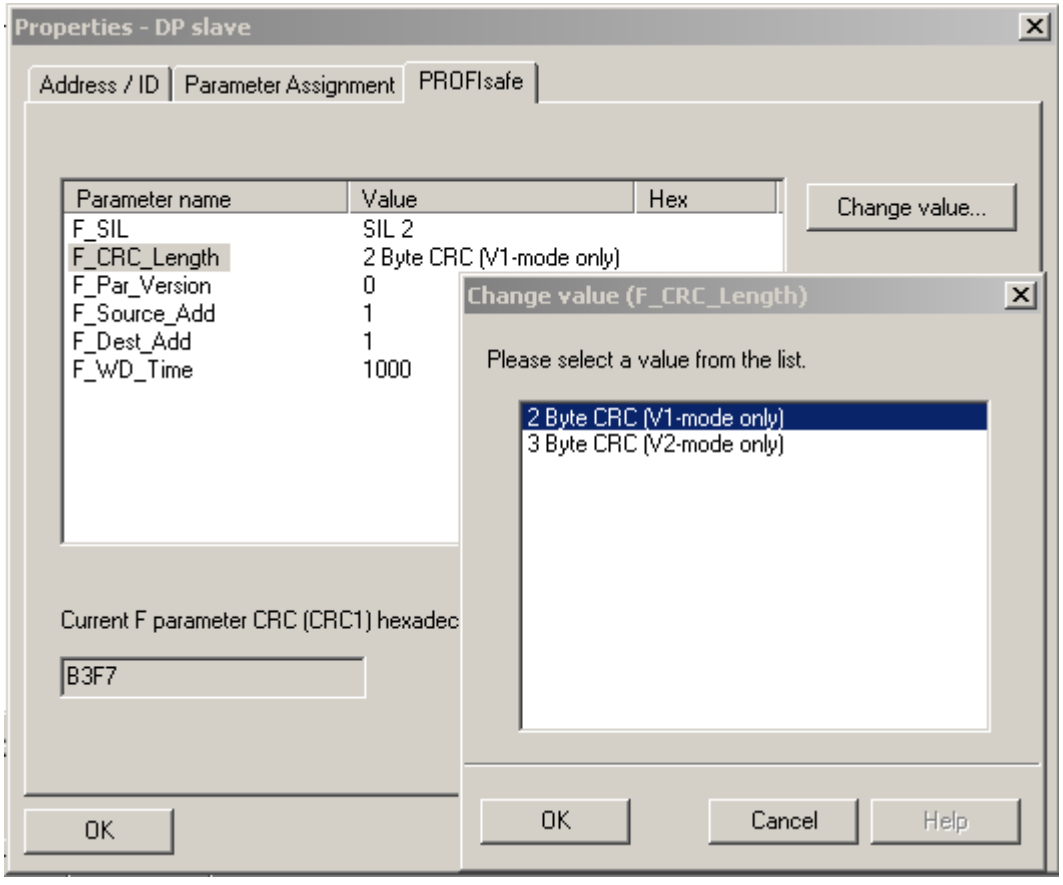

10. Adapt the value of the "F_WD_Time" parameter to the number of PROFIBUS devices connected to the PROFIBUS-PA bus. The default value for this parameter is 1 second.

11. Close the "Properties - DP slave" dialog of the catalog.
12. Click the "Save and compile" button.
13. Press the "Download to module" button.

Note

F-CPUs for PROFIsafe V2 communication

With F-CPUs, if you set "F_Par_Version" to "1" for a device, a communications error occurs in the case of safety-oriented communication with the device because PROFIsafe V2 communication does not support this setting. One of the following diagnostic events will then be entered in the diagnostic buffer of the F-CPU:

- "F-I/O passivated": Cyclic redundancy check error/sequence number error.
- "F-I/O passivated": F-monitoring time for safety frame exceeded.

To make sure that PROFIsafe V2 communication works correctly, use only F-CPUs approved for this purpose.

8.7.5.4 Configure CFC

Procedure

1. You are in the "Catalog" window, "Libraries" tab.
2. Locate the block "F_PA_AI [FB356] in the "Failsafe Blocks" library.
3. Pull the block into the plan with Drag & Drop.
4. Set the parameter "Value", value type "Real" in the block "F_PA_AI" as follows:
   - Click this parameter with the right mouse button.
   - Select "Connect to Operand..." in the context menu.

     A selection list of transfer rates is displayed.
   - Connect the parameter value of the block "F_PA_AI" with the real value of the configured device.
5. Click the "Compile program" button.

6. Select the "Generate module drivers" check box.

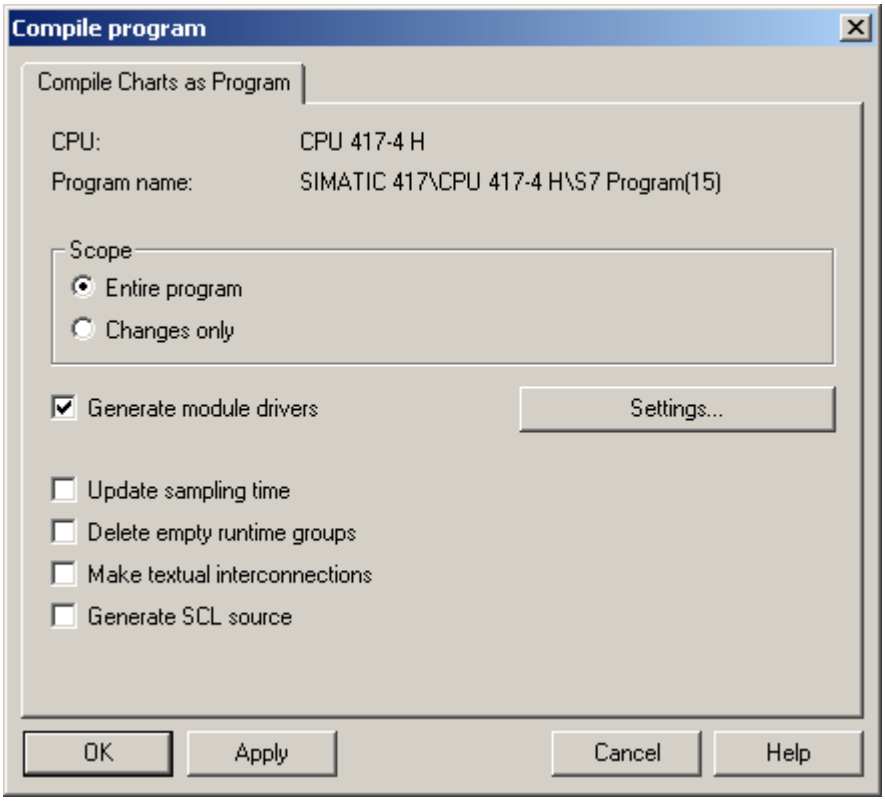

7. Click the "OK" button.

   The parameters are connected.

Note

Until PROFIsafe commissioning is completed, the device displays the error "B_60: Bad function check". This has no effect on the operation of the device. The error message lets you know that the device is not yet in "S4".

8.7.6 Write protection

8.7.6.1 Overview

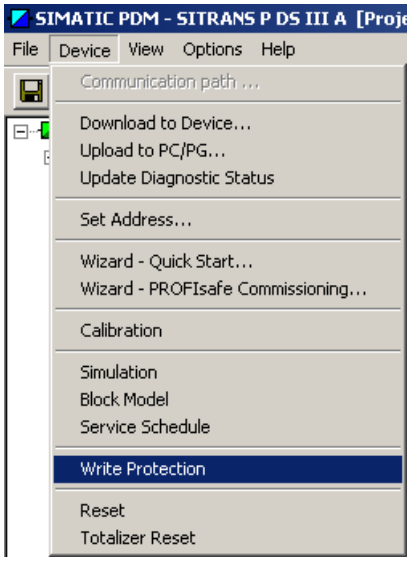

Write protection

The following write-protection options are available:

- Lock or unlock device

  The dialog box shows the current write protection. If you have activated write protection with PIN, you can lock or unlock the device with the PIN here.

  Default PIN: 2457

- Change stored PIN

  The dialog box shows the current write protection. In addition, you enter your desired PIN here.

- Enter Super PIN

  If you have forgotten your PIN, it is possible to deactivate the write protection by entering the super PIN. The device resets the PIN to the default value.

  Super PIN: G73KMQ2W

See also

Activate write protection using PIN in SIMATIC PDM (Page 151)

Activate and parameterize PROFIsafe with SIMATIC PDM (Page 152)

Disable write protection using PIN in SIMATIC PDM (Page 160)

8.7.6.2 Activate write protection using PIN in SIMATIC PDM

Requirement

The device is in the PROFIsafe commissioning status "S1".

Procedure for creating user-defined PIN

1. In the "Device" menu, select the "Write protection" command.
2. Click the "Change PIN" button.
   An additional dialog opens.
3. Enter the desired PIN.
4. Click "OK".
   The dialog closes.
5. Click the "ON" button.
6. Click the "Close" button.

Create default PIN

1. In the "Device" menu, select the "Write protection" command.
2. Click the "ON" button.

Result

The "Write protection" dialog is closed.

A user-defined PIN has been created for the write protection.

8.7.7 PROFIsafe Commissioning

Requirement

Before you commission the PROFIsafe device, configure it, for example in STEP 7.

Process

Activate and parameterize PROFIsafe with SIMATIC PDM (Page 152)
Commission PROFIsafe with SIMATIC PDM (Page 153)
Check write protection with SIMATIC PDM (Page 158)

8.7.7.1 Activate and parameterize PROFIsafe with SIMATIC PDM

Procedure

1. Click the "Upload to PC" button.

   SIMATIC PDM reads in the parameters from the device.
2. Under ">> PROFIsafe", set the "PROFIsafe activation" parameter to "Yes".
3. Set the "F_Dest_ADD" parameter so that it has the same value as in HW Config.
4. If you must change other parameters, then parameterize them.
5. Press the "Download to device" button.

Result

The device has activated the PROFIsafe functionality. The relevant menus for PROFIsafe commissioning are active in SIMATIC PDM.

Note

If you want to change the "F_Dest_ADD" parameter later, reset the device.

Resetting the device (Page 159)

8.7.7.2 Commission PROFIsafe with SIMATIC PDM

Start PROFIsafe commissioning

1. In the "Device" menu, select the "Wizard - PROFIsafe commissioning" command.

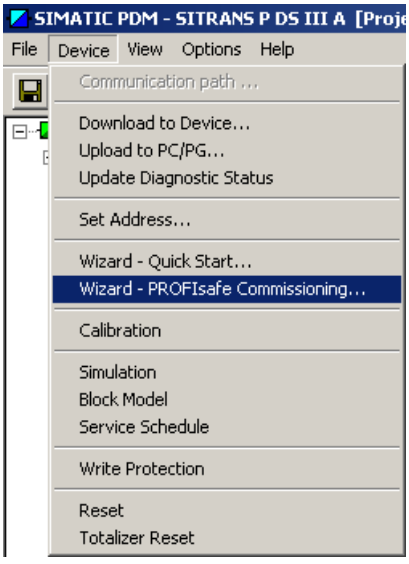

The "Wizard - PROFIsafe commissioning" dialog box is opened.

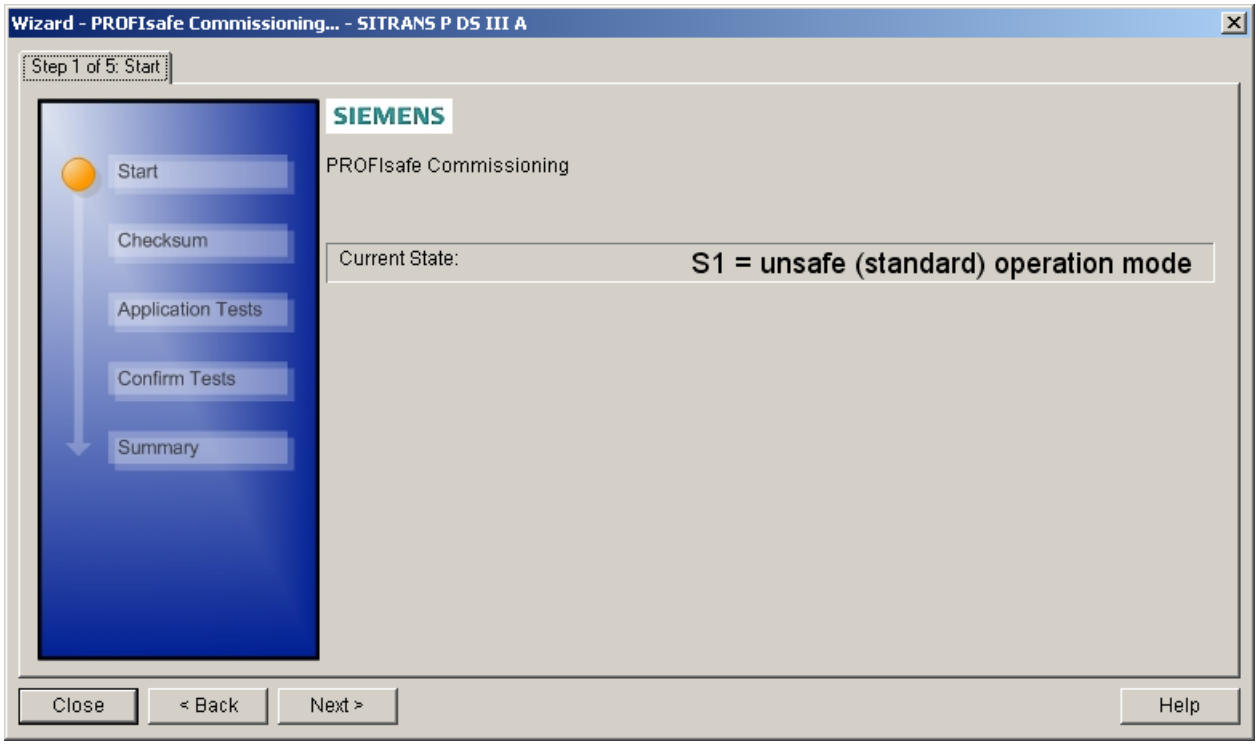

2. Click "Next".

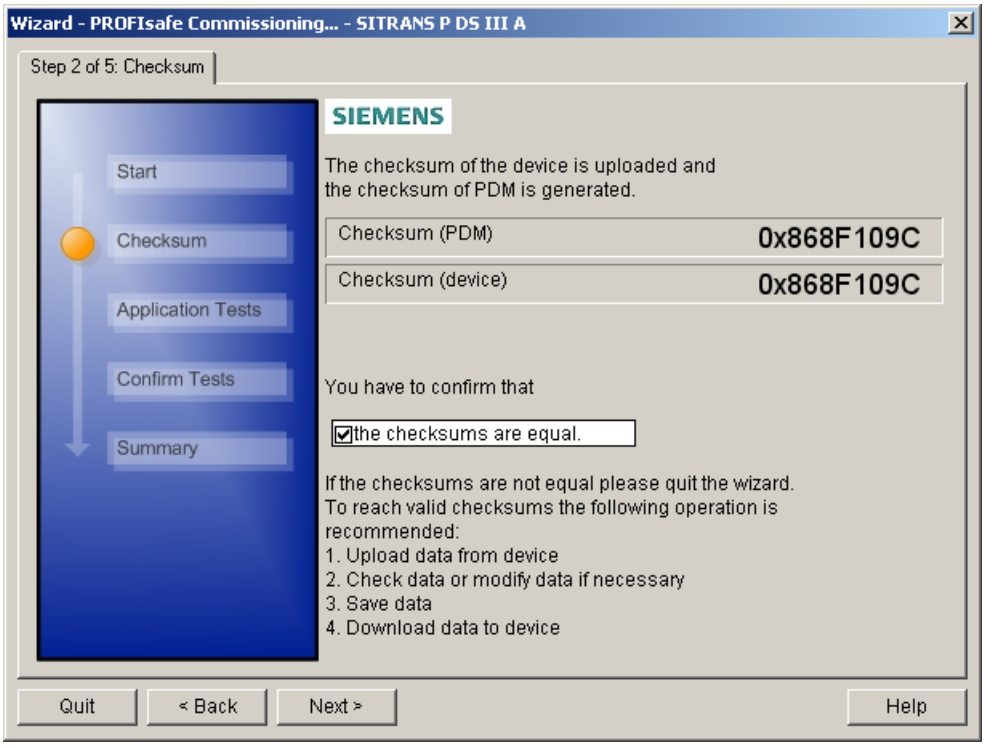

3. If the checksums are the same, select the checkbox.

   You obtain further information.

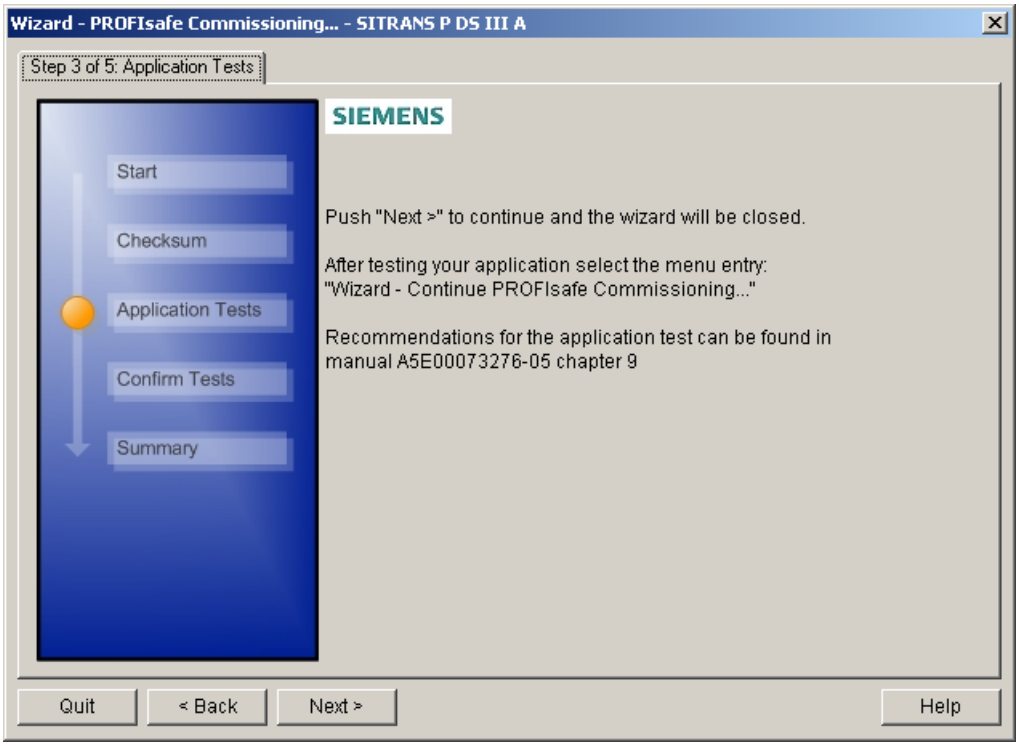

4. Click "Next".
5. Click "OK" to confirm the message that follows.

6. In the "Device" menu, select the "Wizard - continue PROFIsafe commissioning" command.

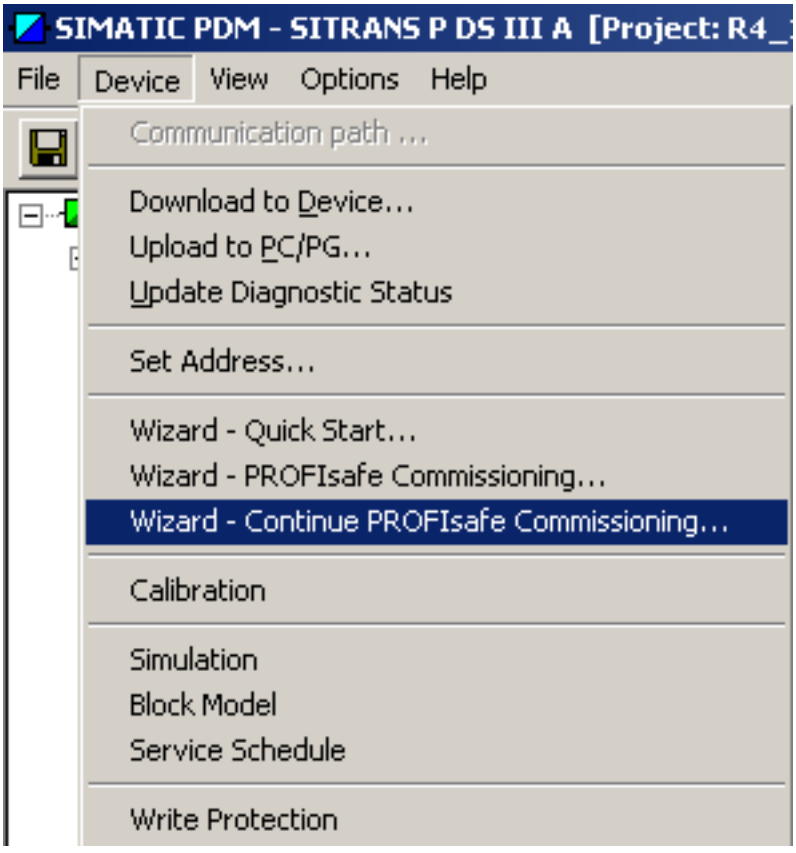

The "Wizard - PROFIsafe commissioning" dialog box is opened again.

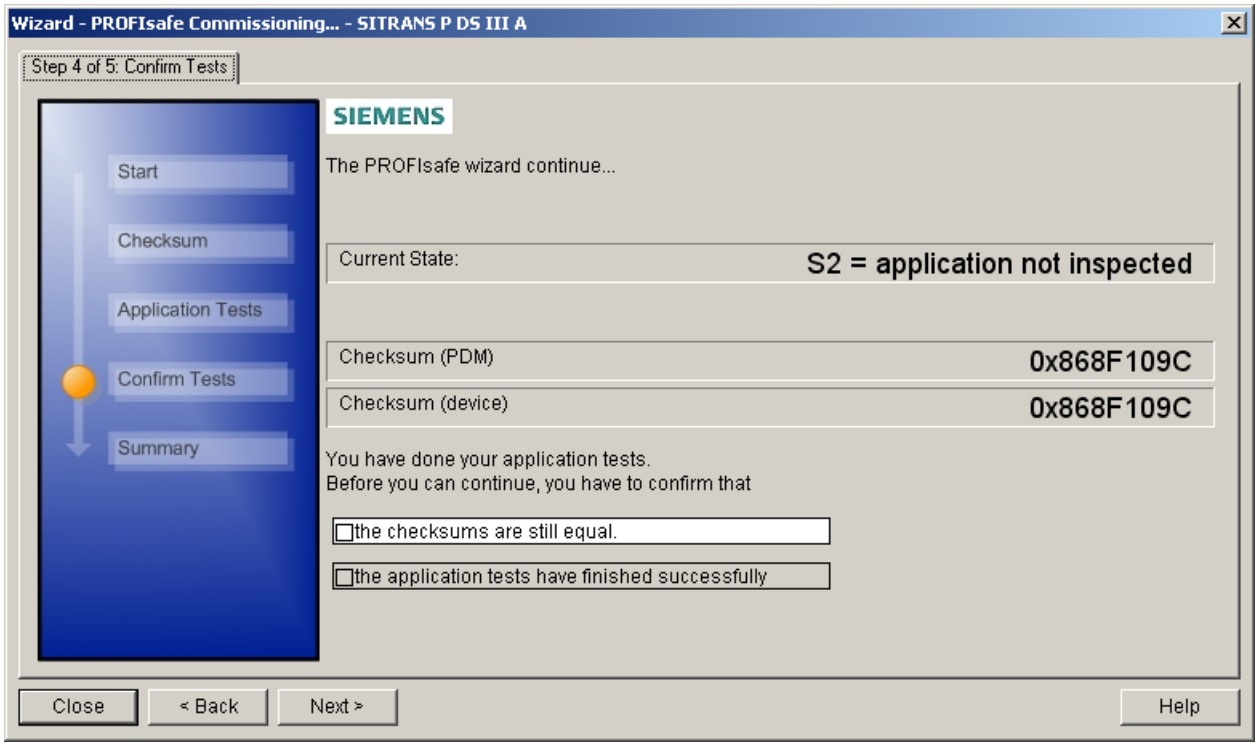

The PROFIsafe commissioning status shows the following: "S2 = application not inspected".

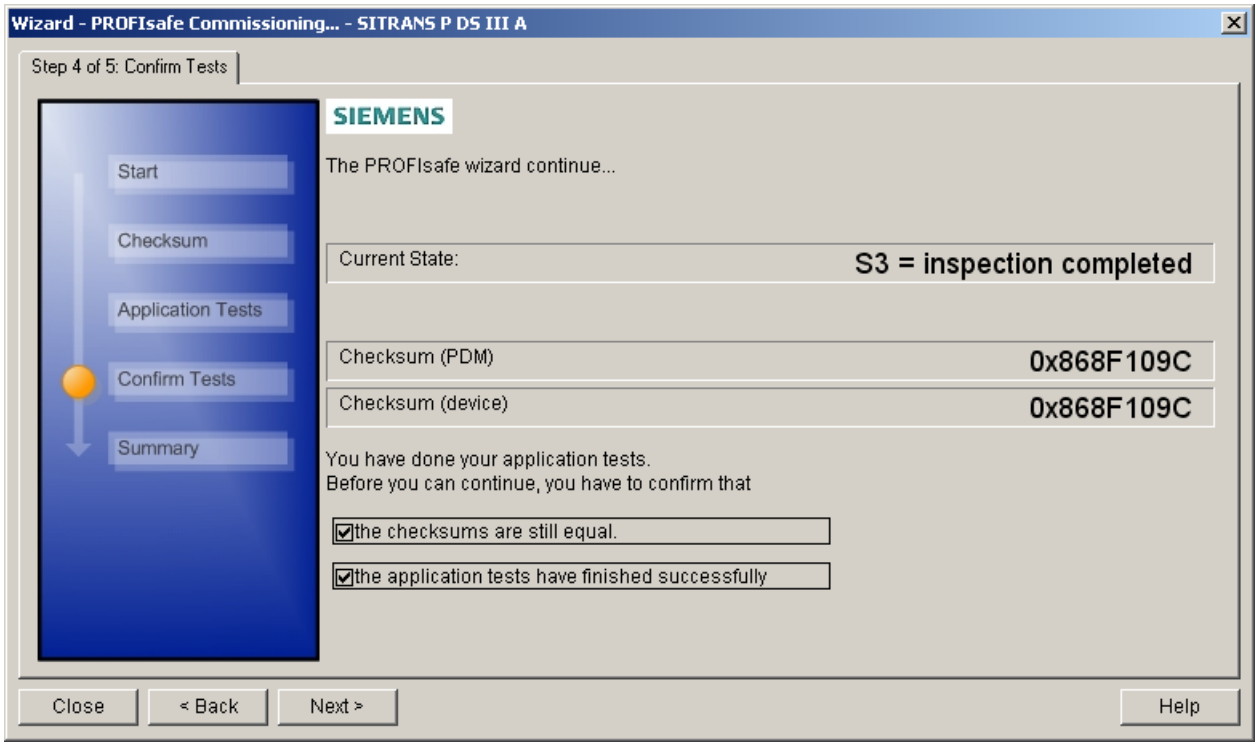

7. If the checksums are still the same, select the checkboxes.

   The PROFIsafe commissioning status shows the following: "S3 = inspection completed".

8. Click "Next".

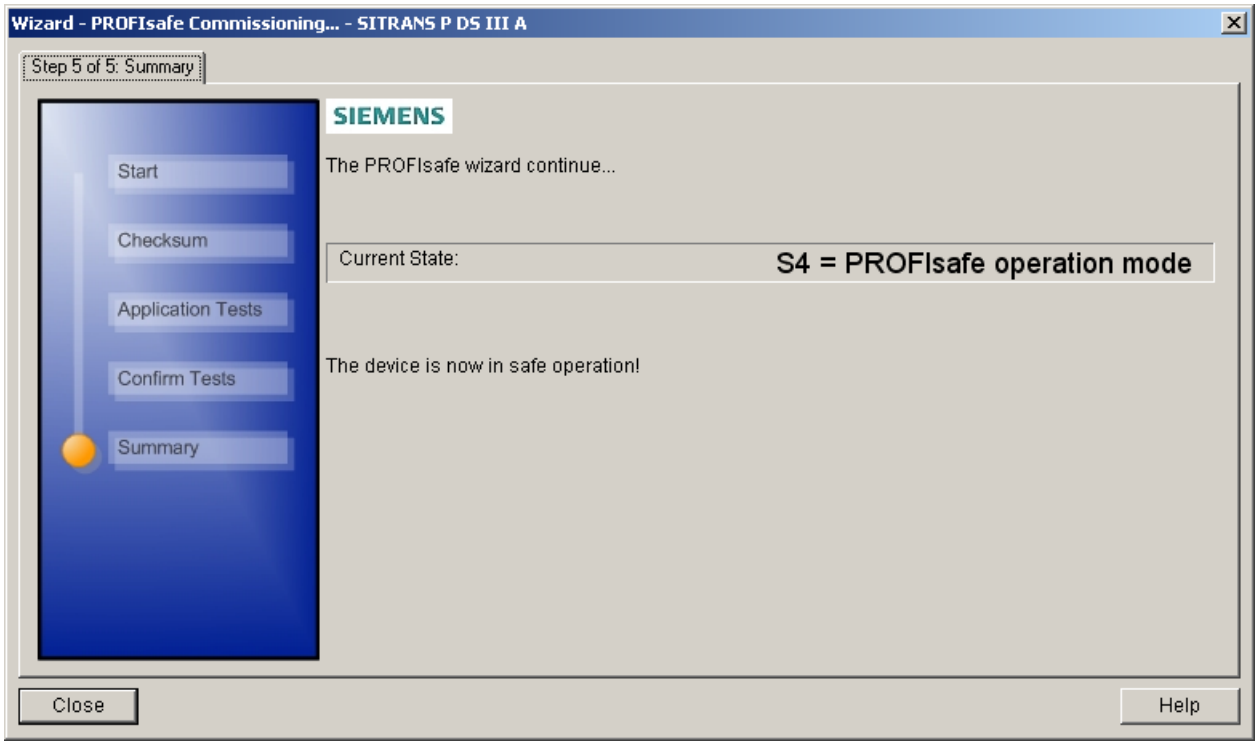

The PROFIsafe commissioning status shows the following: "S4 = PROFIsafe operation mode"

9. Click the "Close" button.

Result

The "Wizard - PROFIsafe commissioning" dialog box is closed.

The PROFIsafe device is in "S4" and is write protected accordingly.

8.7.7.3 Check write protection with SIMATIC PDM

Procedure

To check the write protection in the PROFIsafe Commissioning State, e.g. "S4", proceed as follows:

1. In the "Device" menu, select the "Write protection" command.
2. Make sure that the second option checkbox is active.

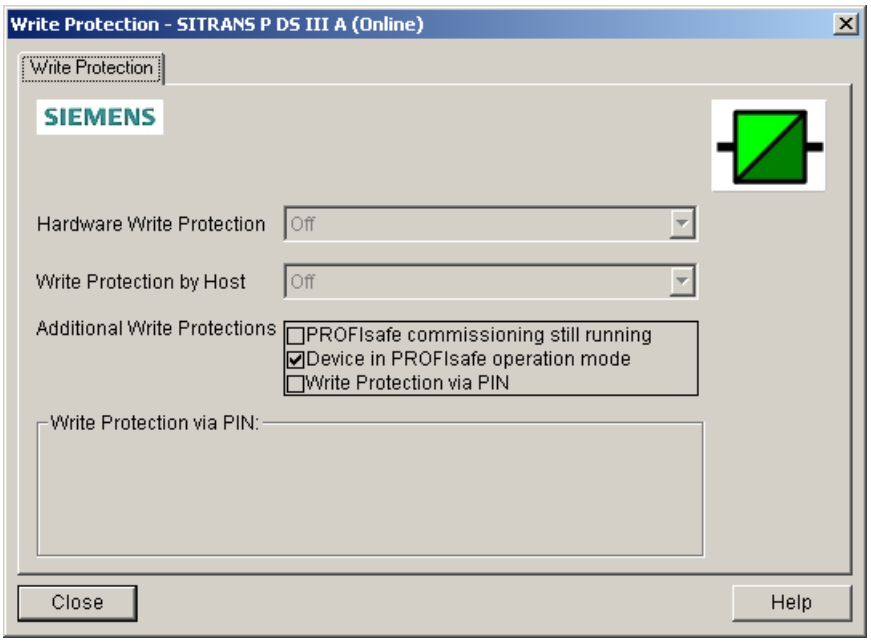

Note

Local operation

The write protection in the PROFIsafe Commissioning State "S4" restricts local operation. The parameters that affect the local appearance of the display can be adjusted.

Note

SIMATIC PDM operation

The write protection in the PROFIsafe commissioning status "S4" allows the maintenance timer to be changed, for example for the calibrating interval of the electronics and for the servicing interval of the sensor.

Note

Additional write protection by HOST

The additional write protection by HOST is set in Continuous Function Chart (CFC) in the F_PA_AI function block, I_PAR_EN parameter.

Note

If you need a user-defined PIN write protection, you will find it in the appropriate chapter.

See also

Overview (Page 150)

Activate write protection using PIN in SIMATIC PDM (Page 151)

8.7.7.4 Speeding up the commissioning process

Parameter setting

During PROFIsafe commissioning you only have 60 seconds for confirmation between steps S3 and S4.

Proceed as follows to speed up commissioning of the device:

1. Insert the blocks from the library into the CFC and interconnect them.
   Show the properties of the "F_PA_AI" block.
2. Go to the folder "Connections" and change the preselection of the "IPAR_EN" connection from hidden to visible.
3. Close the "Properties" menu.
   The input "IPAR_EN" is now visible at the "F_PA_AI" block.
4. Assign this input with "1."
   Write protection of the host is now cancelled.
5. Now go to the PDM table of SITRANS P DSIII PA PROFIsafe
6. Set the "Service Diagnostics" parameter to locked under "Performance > Status/Diagnostics add-on."
7. Save this setting before commissioning.
8. Once you have concluded commissioning, unlock the "Service Diagnostics" parameter once again to receive all diagnostics information of the device.

8.7.7.5 Resetting the device

The following procedure no longer belongs to standard commissioning. Take the following steps only when necessary.

Procedure

1. Select the "Master Reset" command in the "Device" menu.
   The "Master Reset - ..." dialog opens.
2. Click the "Warm restart" button.

Note

Procedure when subsequently changing the F parameter

1. Carry out a change to an F parameter using HW Config or PDM.
2. Select the "Reset" command in the "Device" menu.
   The "Reset - ..." dialog opens.
3. Click the "Warm restart" button.
   As a result of the warm restart, the change to the F parameter is included in the cyclic communication procedure.

8.7.8 Quit PROFIsafe commissioning

8.7.8.1 Preparations for maintenance and service

Procedure

Before you perform maintenance on a PROFIsafe device, proceed as follows:

1. Deactivate "PROFIsafe Commissioning".
2. Disable the write protection.

8.7.8.2 Deactivating PROFIsafe commissioning in SIMATIC PDM

Procedure

1. In the "Device" menu, select the "Wizard - PROFIsafe commissioning" command.
2. Click the "Change to unsafe mode" button.
3. Click the "Close" button.

8.7.8.3 Disable write protection using PIN in SIMATIC PDM

Procedure

1. In the "Device" menu, select the "Write protection" command.
2. Click on the "OFF" button.
3. Enter the user-defined PIN, the default PIN, or the super PIN.

See also

Overview (Page 150)

8.7.9 Replacing a device

Replacing a PROFIsafe device with firmware <= 0301.02.02 or a PROFIBUS device with a PROFIsafe device with firmware 0301.02.03 or higher

When shipped, PROFIsafe is disabled on the replacement device.

Requirement

Import the PROFIsafe EDD as of version 01.02.03 to the device catalog of SIMATIC PDM.

Process

1. Replace the device.
2. Configure the device. You have two options:
   - Making settings locally
   - Host system

The EDD of the new device must be reassigned to that of the replaced PDM object. Making the reassignment in the "Process Devices - Network View" of the SIMATIC Manager.

8.7.9.1 Making settings locally

Procedure

1. Set mode 16.
2. Set the device mode [129] with the [↑] and [↓] keys.
3. Save with the [M] key.

Device modes

Display	Meaning
[0]:	Profile-compliant: Exchangeable for pressure transmitters with PROFIBUS PA Profile 3.0, with analog input function block (without totalizer) (as standard device only)
[1]:	State as shipped Profile-compliant with expansions: Full range of functions of the SITRANS P, series DS III PROFIsafe with: • Analog input function block • Safe analog input • Totalizer PROFIsafe communication in mode V1 or V2 possible
[2]:	Can be replaced by the predecessor device SITRANS P, series DS III PA (only as standard device)
[128]:	Profile-compliant: Exchangeable for pressure transmitters with PROFIBUS PA Profile 3.0 (as standard device only) • Analog input function block • Totalizer
[129]:	• Can be replaced by SITRANS P, series DS III PROFIsafe with PROFIsafe communication only possible in V1 mode. • In this device operating mode a SITRANS P, DS III PA series (standard device with Profibus Profile 3.00 or 3.01) can be replaced by a SITRANS P, DS III PROFIsafe series (firmware version 0301.02.03 or higher).

A specific Generic Station Description (GSD) file is assigned to each device mode:

Display	File name
[0]:	pa_29700.gsd or pa_39700.gsd
[1]:	siem8170.gsd
[2]:	sip1804B.gsd
[128]:	pa_29740.gsd or pa_39740.gsd
[129]:	SI0180A6.gsd or SIEM80A6.gsd or SI0280A6.gsd

8.7.9.2 Configuration with host system

Note

Generic Station Description (GSD)

The generic station description file in HW Config remains the same: **SI0180A6.gsd**.

Procedure

1. Using the EDD, change the "PROFIBUS Ident Number" parameter from manufacturer specific (3.01), PROFIsafe V1/V2 to manufacturer specific (3.01), PROFIsafe V1, if you want to operate your devices with PROFIsafe V1.

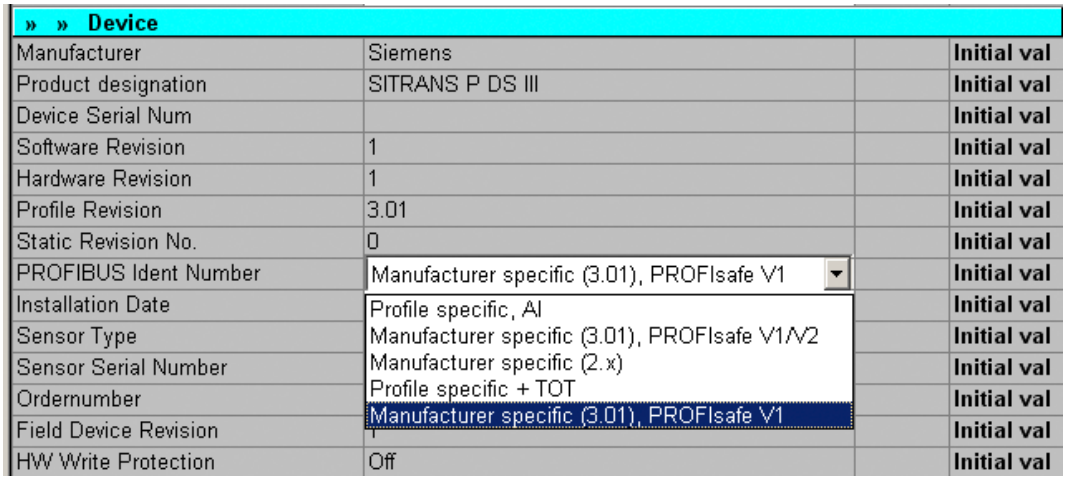

Note

Write protection

Check whether or not write protection is disabled. If write protection is enabled, no further configuration is possible, If write protection is enabled, disable it.

2. Commission PROFIsafe as described in section PROFIsafe Commissioning (Page 151) .

Result

After downloading the data to the device, cyclic communication with the device is once again possible.

See also

Activate and parameterize PROFIsafe with SIMATIC PDM (Page 152)

Commission PROFIsafe with SIMATIC PDM (Page 153)

Configuration/project engineering

9

9.1 Cyclical data transfer

Cyclical data transmission is used to transfer user data relevant for process automation between the control or automation system (class 1 master) and the pressure transmitter.

Setting the PROFIBUS address

The PROFIBUS is set to 126 at the factory. You set it at the device or using a parameterization tool through the bus, e.g.:

- SIMATIC PDM
- HW Config

The new address will take effect either after the first warm start or when the device is disconnected temporarily from the bus.

9.2 Configuring

9.2.1 Overview of configuration

General

Information on the input and output range as well as the consistency of cyclically transmitted data is defined in the device master data file (GSD file). Using the configuration packet, it is checked by the device and declared valid. During projection it must be determined which data will be transmitted in cyclical operation. This allows the optimization of the data quantity to be transmitted. In the Siemens control system, the GSD files of all the usual devices are already available, and they are also available on the Internet and can be imported later.

Reference

http://www.ad.siemens.de/csi_e/gsd

9.2.2 Configuration of user data

The user data which are provided through the PROFIBUS to the control system are based on the selected target configuration. User data is generated by the function blocks and assembled in the following order:

Analog input function block

The *Analog input function block* provides the content of the "Output" parameter. The *Totalizer function block* provides the content of the "Totalizer output" parameter. You can select in the configuration which function block is used to generate the output data:

- Output
- Totalizer output

In the "Totalizer output" parameter you can insert the following additional functions:

- Reset totalizer output
- Operating mode

Using "Reset totalizer output" you can reset the integrator from the application program, and with "Operating mode" you can determine its function.

Note

For STEP 7, the configuration tool is HW Config.

For STEP 5, the configuration tool is COM_PROFIBUS.

User data

Table 9- 1 User data dependent on the selected function block

Function block / parameter	Byte	User data, sent to master	User data, sent from master	Meaning, depending on parameter
Analog input/output	1-4	Measured value	---	Pressure, height, volume, mass flow, volume flow, sensor temperature, electronics temperature
	5.	Status		
Totalizer / totalizer output	6-9	Measured value	---	Mass or volume
	5	Status		

Table 9- 2 User data, dependent on selected additional function in the totalizer output function block

Additional function	Byte	User data, sent to master	User data, sent from master	Meaning	
Reset totalizer output	1	---	Reset totalizer output	Totalizer reset function	
				0	Normal operation of totalizer Integration running.
				1	Step integration and reset integrator back to 0.
				2	Stop integration and load integrator with preset value.

Additional function	Byte	User data, sent to master	User data, sent from master	Meaning	
Operating mode	2	---	Operating mode	Operating mode of totalizer	
				0	Net counter - count up and down.
				1	Ascending counter
				2	Descending counter
				3	Hold count.

See also

Analog input function block (Page 104)

Flow measurement (Page 111)

9.2.3 Transmission of user data over PROFIBUS

User data is continually updated via PROFIBUS cyclical data transmission.

Table 9- 3 IEEE standard floating point representation of the measured value

Bits	7	6	5	4	3	2	1	0
Byte 1	VZ	E 2^7	E 2^6	E 2^5	E 2^4	E 2^3	E 2^2	E 2^1
Byte 2	E 2^0	E 2^{-1}	M 2^{-2}	M 2^{-3}	M 2^{-4}	M 2^{-5}	M 2^{-6}	M 2^{-7}
Byte 3	M 2^{-8}	M 2^{-9}	M 2^{-10}	M 2^{-11}	M 2^{-12}	M 2^{-13}	M 2^{-14}	M 2^{-15}
Byte 4	M 2^{-16}	M 2^{-17}	M 2^{-18}	M 2^{-19}	M 2^{-20}	M 2^{-21}	M 2^{-22}	M 2^{-23}

VZ Sign
0 positive
1 negative
M mantissa
E exponent

9.2.4 Status

The status provides information on:

- Usability of the measured value in the application program
- Device status, e.g. self-diagnosis or system diagnostic
- Additional process information, for instance process alarms

The status code consists of one letter and a three-digit number. The letter stands for:

G	Good
U	Unsure
B	Bad

Table 9- 4 Example status code

Digital display	Hex	Configured measured value source	PDM display	Cause	Measure
G_141	8D	Electronics temperature, output	Good, lower alarm limit violated	Lower configured alarm limit violated.	Correct error through user program.
U_071	47	Output	Unsure, last usable value, value constant	Input condition "fail safe" is fulfilled, the parameterized safety setting is set to "keep last valid value".	Check the data measurement.
B_011	0B	Secondary variable 3	Bad, not connected, value constant	Variable is not calculated,	Correct the "transmitter type" setting.

See also

Overview of status codes (Page 189)

9.2.5 Diagnosis

Besides status information, the device can also actively send information about its own state. Diagnostics are important information which an automation system can use to initiate corrective measures.

To transmit diagnostic information, the standard mechanisms of the PROFIBUS DP are used and messages are actively sent to the class 1 master. PROFIBUS DP provides a protocol to transmit information to the class 1 master with a higher priority than the user data.

Messages

The content of the "Device state" parameter from the physical block is sent, along with information about whether a state change (event incoming/event sent) has occurred.

The diagnostic object consists of four bytes. For the pressure transmitter, only the first two bytes are relevant.

Table 9- 5 Diagnostics messages

Byte	Bit	Meaning of "1"	Cause	Measure
Byte 0	0			
	1			

Byte	Bit	Meaning of "1"	Cause	Measure
	2			
	3	Electronics temperature too high	The transmitter monitors the temperature of the transmitter electronics. If this exceeds 85 °C, this message is generated.	Reduce the ambient temperature to the permitted range.
	4	Memory errors	During operation, the memory of the cells and the electronics is continually checked for checksum errors and read/write errors. In case of error, this message is generated.	Replace the electronics and, if necessary, the sensor.
	5	Error recording measured value	In case of a sensor failure or the violation of control limits (< -20 % or > +20 % of the nominal measurement range)	Have a service technician check the sensor.
	6			
	7			
Byte 0	0			
	1			
	2			
	3	Restart executed (goes to "0" after 10 seconds)	Power was applied to the device, or a warm start was performed using SIMATIC PDM, or the internal watchdog triggered.	Check the wiring and the supply voltage.
	4	Restart Goes to "0" after 10 seconds	The device was reset to the factory settings.	
	5	Service necessary	A calibration or service interval has run out.	Perform the calibration or service and clear the message and reset the messages using SIMATIC PDM.
	6			
	7	Ident number changed	You changed the parameter "PROFIBUS Ident Number" during cyclical operation. The device signals the change to the ident number and shows a shutdown warning. In case of a restart, the device will no longer participate in cyclic user data exchange unless the system configuration is changed.	Make a change to the configuration data (change the GSD file) so that it matches the ident number configured in the device.

Note

The device state can be simulated using SIMATIC PDM. This allows you to check the reaction of the automation system to an error.

9.3 Acyclic data transfer

Acyclic data transmission is used primarily for the transmission of parameters:

- During commissioning
- During service
- In batch processes
- To display additional measurement data which is not sent during cyclic user data transmission, e.g. raw pressure value

The data traffic between a class 2 master and the field device occurs over a so-called C2 connection. So that multiple class 2 masters can access the same pressure transmitter at the same time, the device supports up to four C2 connections. However, you must ensure that the same data is not being written.

Commissioning 10

10.1 Basic safety instructions

⚠ DANGER

Toxic gases and liquids

Danger of poisoning when venting the device: if toxic process media are measured, toxic gases and liquids can be released.

- Before venting ensure that there are no toxic gases or liquids in the device, or take the appropriate safety measures.

⚠ WARNING

Improper commissioning in hazardous areas

Device failure or danger of explosion in hazardous areas.

- Do not commission the device until it has been mounted completely and connected in accordance with the information in Chapter "Technical data (Page 193)".
- Before commissioning take the effect on other devices in the system into account.

⚠ WARNING

Opening device in energized state

Danger of explosion in areas subject to explosion hazard.

- Only open the device in a de-energized state.
- Check prior to commissioning that the cover, cover locks, and cable inlets are assembled in accordance with the directives.

Exception: Devices having the type of protection "Intrinsic safety Ex i" may also be opened in energized state in hazardous areas.

10.2 Introduction to commissioning

Following commissioning, the pressure transmitter is immediately ready for use.

To obtain stable measured values, the pressure transmitter needs to be allowed to warm up for around 5 minutes after the power supply is switched on. When it starts up, the pressure transmitter goes through an initialization routine (display at the end: "Init done"). If the pressure transmitter does not complete the initialization routine, check the auxiliary power.

The operating data must correspond to the values specified on the nameplate. If you switch on the auxiliary power, the pressure transmitter is in operation.

The following commissioning cases are typical examples. Configurations different from those listed here may be meaningful depending on the system configuration.

10.3 Gauge pressure, absolute pressure from differential pressure series, and absolute pressure from gauge pressure series

10.3.1 Commissioning for gases

Usual arrangement

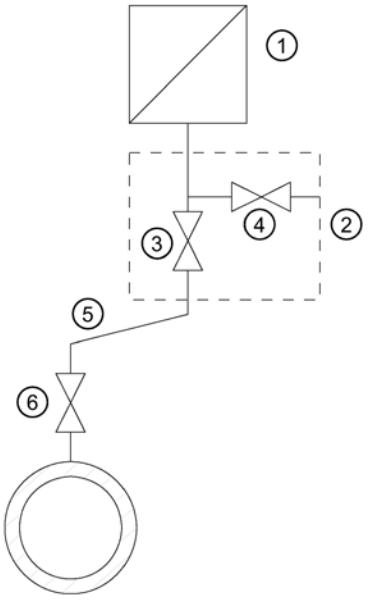

Measuring gases above the pressure tapping point

Special arrangement

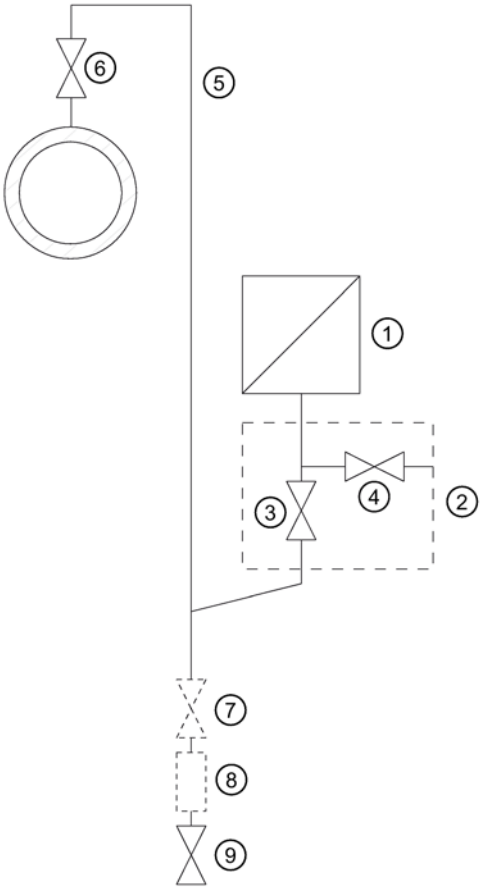

Measuring gases below the pressure tapping point

①	Pressure transmitter	⑤	Pressure line
②	Shut-off valve	⑥	Shut-off valve
③	Shut-off valve to process	⑦	Shut-off valve (optional)
④	Shut-off valve for test connection or for bleed screw	⑧	Condensate vessel (optional)
		⑨	Drain valve

Requirement

All valves are closed.

Procedure

To commission the pressure transmitter for gases, proceed as follows:

1. Open the shut-off valve for the test connection ④.
2. Via the test connection of the shut-off valve ②, apply the pressure corresponding to the start of scale value to the pressure transmitter ①.
3. Check the start of scale value.
4. If the start of scale value differs from the value desired, correct it.
5. Close the shut-off valve for the test connection ④.
6. Open the shut-off valve ⑥ at the pressure tapping point.
7. Open the shut-off valve for the process ③.

10.3.2 Commissioning with steam or liquid

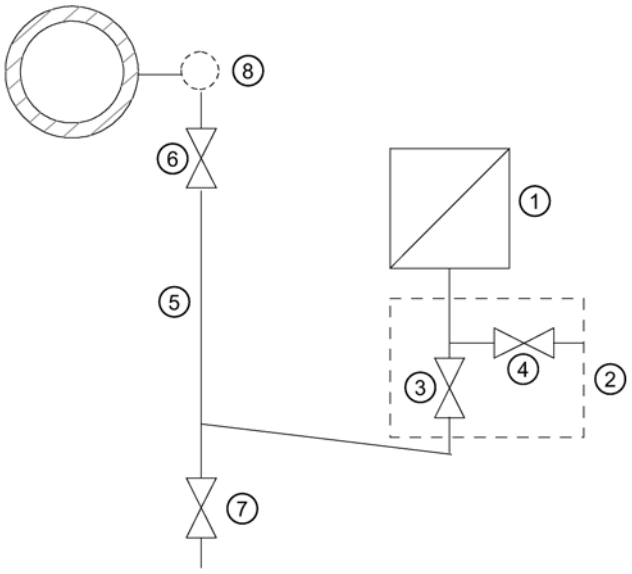

① Pressure transmitter
② Shut-off valve
③ Shut-off valve to process
④ Shut-off valve for test connection or for bleed screw
⑤ Pressure line
⑥ Shut-off valve
⑦ Blow-out valve
⑧ Compensation vessel (steam only)

Image 10-1 Measuring steam

Requirement

All valves are closed.

Procedure

To commission the pressure transmitter for steam or liquid, proceed as follows:

1. Open the shut-off valve for the test connection ④.
2. Via the test connection of the shut-off valve ②, apply the pressure corresponding to the start of scale value to the pressure transmitter ①.
3. Check the start of scale value.
4. If the start of scale value differs from the value desired, correct it.
5. Close the shut-off valve for the test connection ④.

6. Open the shut-off valve ⑥ at the pressure tapping point.
7. Open the shut-off valve for the process ③.

10.4 Differential pressure and flow rate

10.4.1 Safety notes for commissioning with differential pressure and flow rate

⚠ WARNING

Incorrect or improper operation

If the lock screws are missing or are not sufficiently tight, and/or if the valves are operated incorrectly or improperly, it could lead to serious physical injuries or considerable damage to property.

Measure

- Make sure the locking screw and/or the vent valve are screwed in and tightened.
- Ensure that the valves are operated correctly and properly.

10.4.2 Commissioning in gaseous environments

Usual arrangement

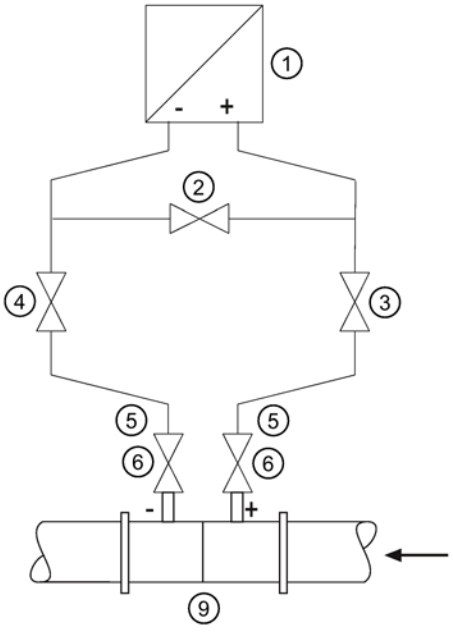

Pressure transmitter **above** the differential pressure transducer

Special arrangement

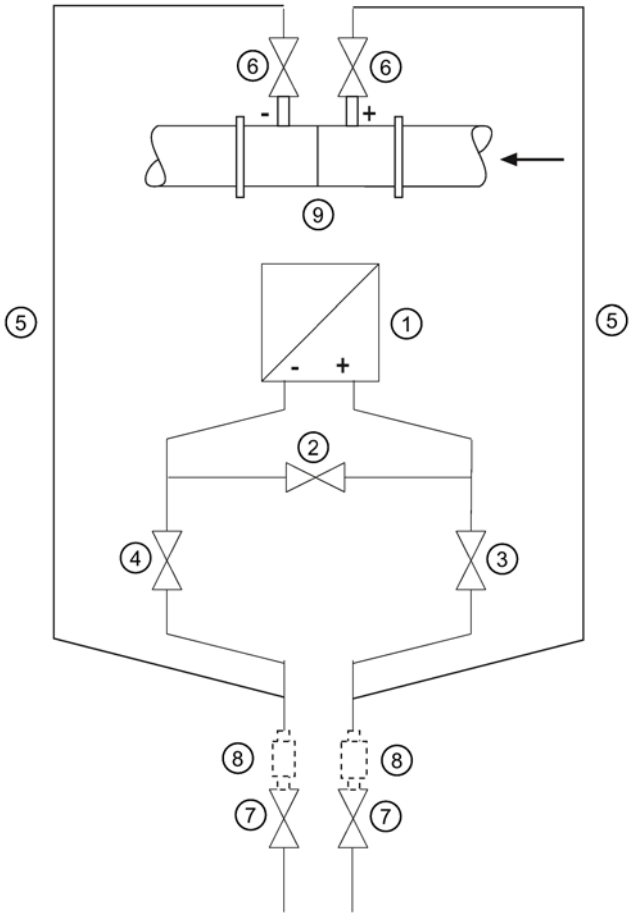

Pressure transmitter **below** the differential pressure transducer

① Pressure transmitter
② Stabilizing valve
③, ④ Differential pressure valves
⑤ Differential pressure lines
⑥ Shut-off valves
⑦ Blow-out valve
⑧ Condensation vessels (optional)
⑨ Differential pressure transducer

Requirement

All shut-off valves are closed.

Procedure

To commission the pressure transmitter for gases, proceed as follows:

1. Open both the shut-off valves ⑥ at the pressure tapping point.
2. Open the stabilizing valve ②.
3. Open the differential pressure valve (③ or ④).
4. Check and, if necessary, correct the zero point when the start of scale value is 0 kPa.
5. Close the stabilizing valve ②.
6. Open the other differential pressure valve (③ or ④).

10.4.3 Commissioning for liquids

Usual arrangement

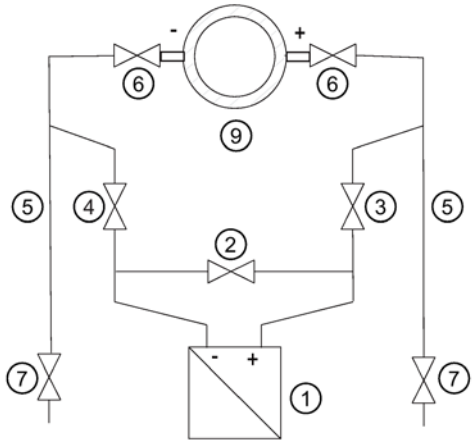

Pressure transmitter **below** the differential pressure transducer

Special arrangement

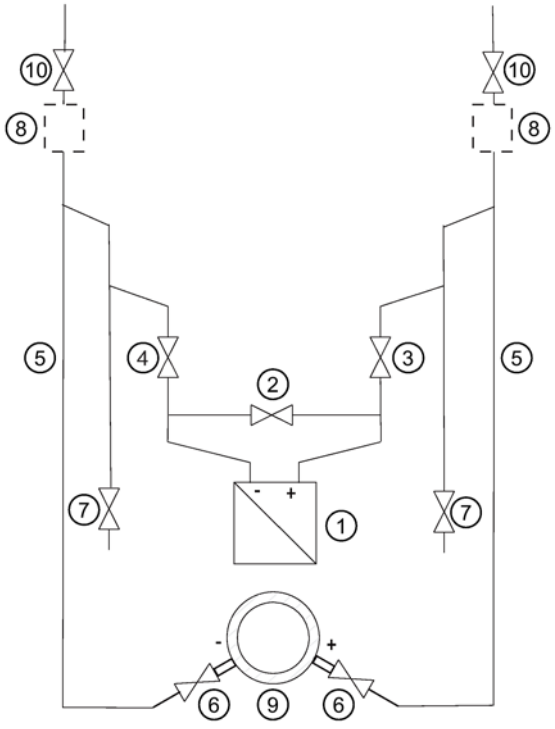

Pressure transmitter **above** the differential pressure transducer

① Pressure transmitter
② Stabilizing valve
③, ④ Differential pressure valves
⑦ Drain valve
⑧ Gas collector vessels (optional)
⑨ Differential pressure transducer

⑤ Differential pressure lines
⑥ Shut-off valves
⑩ Vent valves

Requirement

All valves are closed.

Procedure

DANGER

Toxic liquids

Danger of poisoning when the device is vented.

If toxic process media are measured with this device, toxic liquids can escape when the device is vented.

- Before venting, make sure there is no liquid in the device or take the necessary safety precautions.

To commission the pressure transmitter for liquids, proceed as follows:

1. Open both the shut-off valves ⑥ at the pressure tapping point.
2. Open the stabilizing valve ②.
3. With **pressure transmitters below the differential pressure transducer**, open both drain valves one after the other ⑦ until the liquid emerges without bubbles.
   In the case of a **pressure transmitter above the differential pressure transducer**, open both vent valves one after the other ⑩ until the liquid emerges without bubbles.
4. Close both drain valves ⑦ or vent valves ⑩.
5. Open the differential pressure valve ③ and the vent valve on the positive side of the pressure transmitter ① slightly, until fluid escapes without bubbles.
6. Close the vent valve.
7. Open the vent valve on the negative side of the pressure transmitter ① slightly, until fluid escapes without bubbles.
8. Close the differential pressure valve ③.
9. Open the differential pressure valve ④ until the liquid emerges and then close it.
10. Close the vent valve on the negative side of the pressure transmitter ①.
11. Open the differential pressure valve ③ by rotating it in half a turn.
12. Check and if required correct the zero point when the start of scale value is 0 kPa.
13. Close the stabilizing valve ②.
14. Open the differential pressure valves (③ and ④) completely.

10.4.4 Commissioning with vapor

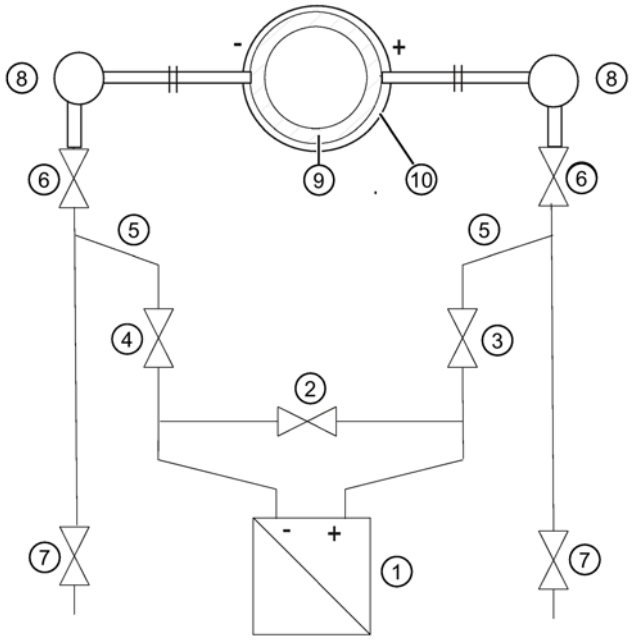

①	Pressure transmitter	⑦	Drain valve
②	Stabilizing valve	⑧	Condensate pots
③, ④	Differential pressure valves	⑨	Differential pressure transducer
⑤	Differential pressure lines	⑩	Insulation
⑥	Shut-off valves		

Image 10-2 Measuring steam

Requirement

All valves are closed.

Procedure

⚠ WARNING

Hot vapor

Danger of injury or damage to device.

If the shutoff valves ⑥ and the differential pressure valve ③ are both open and the stabilizing valve ② is then opened, the pressure transmitter ① can be damaged by the flow of vapor.

- Follow the specified procedure for commissioning.

⚠ WARNING

Hot vapor

Danger of injury.

You can briefly open the drain valves ⑦ to clean the line. Hot vapor can escape in the process.

- Only open the drain valves ⑦ briefly, and close them again before vapor escapes.

Note

Incorrect measurement results

The measurement result is only free of errors if the differential pressure lines ④ have equally high condensate columns with the same temperature. The zero calibration must be repeated, if required, if these conditions are fulfilled.

To commission the pressure transmitter for vapor, proceed as follows:

1. Open both the shut-off valves ⑥ at the pressure tapping point.
2. Open the stabilizing valve ②.
3. Wait till the vapor in the differential pressure lines ⑤ and in the condensate pots ⑧ condenses.
4. Open the differential pressure valve ③ and the vent valve on the positive side of the pressure transmitter ① slightly, until condensate escapes without bubbles.
5. Close the vent valve.
6. Open the vent valve on the negative side of the pressure transmitter ① slightly, until condensate escapes without bubbles.
7. Close the differential pressure valve ③.
8. Open the differential pressure valve ④ till the air-free condensate goes out and then close it.
9. Close the vent valve on the negative side ①.
10. Open the differential pressure valve ③ by rotating it in half a turn.
11. Check and if required correct the zero point when the start of scale value is 0 kPa.
12. Close the stabilizing valve ②.
13. Open the differential pressure valve ③ and ④ completely.
14. You can briefly open the blow-out valves ⑦ to clean the line. Close before steam starts to leak.

Repair and maintenance 11

11.1 Basic safety instructions

WARNING

Impermissible repair of explosion protected devices

Danger of explosion in areas subject to explosion hazard.

- Repair must be carried out by Siemens authorized personnel only.

WARNING

Impermissible accessories and spare parts

Danger of explosion in areas subject to explosion hazard.

- Only use original accessories or original spare parts.
- Observe all relevant installation and safety instructions described in the instructions for the device or enclosed with the accessory or spare part.

WARNING

Use of incorrect device parts in potentially explosive environments

Devices and their associated device parts are either approved for different types of protection or they do not have explosion protection. There is a danger of explosion if device parts (such as covers) are used for devices with explosion protection that are not expressly suited for this type of protection. If you do not adhere to these guidelines, the test certificates and the manufacturer warranty will become null and void.

- Use only device parts that have been approved for the respective type of protection in the potentially explosive environment. Covers that are not suited for the "explosion-proof" type of protection are identified as such by a notice label attached to the inside of the cover with "Not Ex d Not SIL".
- Do not swap device parts unless the manufacturer specifically ensures compatibility of these parts.

⚠ WARNING

Maintenance during continued operation in a hazardous area

There is a danger of explosion when carrying out repairs and maintenance on the device in a hazardous area.

- Isolate the device from power.

- or -

- Ensure that the atmosphere is explosion-free (hot work permit).

⚠ WARNING

Commissioning and operation with pending error

If an error message appears, correct operation in the process is no longer guaranteed.

- Check the gravity of the error.
- Correct the error.
- If the error still exists:
  - Take the device out of operation.
  - Prevent renewed commissioning.

See also

Display in case of a fault (Page 185)

⚠ WARNING

Hot, toxic or corrosive process media

Danger of injury during maintenance work.

When working on the process connection, hot, toxic or corrosive process media could be released.

- As long as the device is under pressure, do not loosen process connections and do not remove any parts that are pressurized.
- Before opening or removing the device ensure that process media cannot be released.

⚠ WARNING

Improper connection after maintenance

Danger of explosion in areas subject to explosion hazard.

- Connect the device correctly after maintenance.
- Close the device after maintenance work.

Refer to Chapter "Connecting up (Page 63)".

⚠ WARNING

Use of a computer in a hazardous area

If the interface to the computer is used in the hazardous area, there is a danger of explosion.

- Ensure that the atmosphere is explosion-free (hot work permit).

⚠ CAUTION

Releasing key lock

Improper modification of parameters could influence process safety.

- Make sure that only authorized personnel may cancel the key locking of devices for safety-related applications.

⚠ CAUTION

Hot surfaces

Danger of burns during maintenance work on parts having surface temperatures exceeding 70 °C (158 °F).

- Take corresponding protective measures, for example by wearing protective gloves.
- After carrying out maintenance, remount touch protection measures.

⚠ WARNING

Hazardous voltage with open device in versions with 4-conductor extension

Danger of electrocution when the enclosure is opened or enclosure parts are removed.

- Disconnect the device before you open the enclosure or remove enclosure parts.
- Observe the special precautionary measures if maintenance is required while the device is live. Have maintenance work carried out by qualified personnel.

NOTICE
Electrostatic-sensitive devices The device contains electrostatic-sensitive devices (ESD). ESD can be destroyed by voltages far too low to be detected by humans. These voltages can occur if you simply touch a component part or the electrical connections of a module without being electrostatically discharged. The damage to a module caused by overvoltage cannot normally be detected immediately; it only becomes apparent after a longer period of operating time has elapsed. Protective measures against the discharge of static electricity: • Make sure that no power is applied. • Before working with modules, make sure that you discharge static from your body, for example by touching a grounded object. • Devices and tools used must be free of static charge. • Hold modules only by their edges. • Do not touch connector pins or conductor tracks on a module with the ESD notice.

11.2 Maintenance and repair work

11.2.1 Defining the maintenance interval

⚠ WARNING
No maintenance interval has been defined Device failure, device damage, and risk of injury. • Define a maintenance interval for recurring tests depending on the use of the device and your own experience. • The maintenance interval will vary from site to site depending on corrosion resistance.

11.2.2 Checking the gaskets

Inspect the seals at regular intervals

Note

Incorrect seal changes

Incorrect measured values will be displayed. Changing the seals in a process flange of a differential pressure measuring cell can alter the start-of-scale value.

- Changing seals in devices with differential pressure measuring cells may only be carried out by personnel authorized by Siemens.

Note

Using the wrong seals

Using the wrong seals with flush-mounted process connections can cause measuring errors and/or damage the diaphragm.

- Always use seals which comply with the process connection standards or are recommended by Siemens.

1. Clean the enclosure and seals.
2. Check the enclosure and seals for cracks and damage.
3. Grease the seals if necessary.
   - or -
4. Replace the seals.

11.2.3 Display in case of a fault

Check the start of scale value of the device from time to time.

Differentiate between the following in case of a fault:

- The internal self test has detected a fault, e.g. sensor break, hardware fault/Firmware fault.

  Displays:

  – Display: display "ERROR"

  – PROFIBUS: B_016: sensor error
  diagnostics in measured-value recording

- Grave hardware faults, the processor is not functioning.

  Displays:

  – Display: no defined display

  – PROFIBUS: slave not available

In case of defect, you can replace the electronic unit by following the warning notes and the provided instruction manual.

See also

Error display (Page 74)

11.2.4 Changing the measuring cell and application electronics

Related

Each of the individual components "Measuring cell" and "Electronics" has a non-volatile memory (EEPROM).

Measuring cell data (e.g.: measuring range, measuring cell material, oil filling) and application-specific electronics data (e.g.: downscaling, additional electrical damping) are located in the measuring cell EEPROM. Application-specific data is lost when the measuring cell is changed. Application-specific data is not lost when the application electronics is changed.

You can backup application-specific data before changing the measuring cell and reload it afterwards. Use an input device which supports the PROFIBUS protocol (e.g. PROFIBUS communicator, PC with PROFIBUS modem and PROFIBUS software or PC with PROFIBUS modem and PDM software). Factory settings will be used if application-specific data is not backed up before the measuring cell is changed.

Technical developments enable advanced functions to be implemented in the firmware of the measuring cell or application electronics. Further technical developments are indicated by modified firmware statuses (FW). The firmware status does not affect whether the modules can be replaced. However, the scope of functions is limited to the function of existing components.

If a combination of certain firmware versions of measuring cell and application electronics is not possible for technical reasons, the device will identify this problem and go into "Fault current" mode. This information is also provided over the PROFIBUS interface.

11.3 Cleaning

⚠ WARNING

Dust layers above 5 mm

Danger of explosion in hazardous areas. Device may overheat due to dust build up.

- Remove dust layers in excess of 5 mm.

NOTICE
Penetration of moisture into the device
Device damage.
• Make sure when carrying out cleaning and maintenance work that no moisture penetrates the inside of the device.

Cleaning the enclosure

- Clean the outside of the enclosure and the display window using a cloth moistened with water or a mild detergent.
- Do not use aggressive cleaning agents or solvents. Plastic components or painted surfaces could be damaged.

⚠ WARNING
Electrostatic charge
Danger of explosion in hazardous areas if electrostatic charges develop, for example, when cleaning plastic surfaces with a dry cloth.
• Prevent electrostatic charging in hazardous areas.

11.3.1 Servicing the remote seal measuring system

The remote seal measuring system usually does not need servicing.

If the mediums are contaminated, viscous or crystallized, it could be necessary to clean the diaphragm from time to time. Use only a suitable solvent to remove the deposits from the diaphragm. Do not use corrosive cleaning agents. Prevent the diaphragm from getting damaged due to sharp-edged tools.

NOTICE
Improper cleaning of diaphragm
Device damage. The diaphragm can be damaged.
• Do not use sharp or hard objects to clean the diaphragm.

11.4 Return procedure

Enclose the bill of lading, return document and decontamination certificate in a clear plastic pouch and attach it firmly to the outside of the packaging.

Required forms

- Delivery note
- Return goods delivery note
  (http://www.siemens.com/processinstrumentation/returngoodsnote)

  with the following information:
  - Product (item description)
  - Number of returned devices/replacement parts
  - Reason for returning the item(s)
- Decontamination declaration (http://www.siemens.com/sc/declarationofdecontamination)

  With this declaration you warrant "that the device/replacement part has been carefully cleaned and is free of residues. The device/replacement part does not pose a hazard for humans and the environment."

  If the returned device/replacement part has come into contact with poisonous, corrosive, flammable or water-contaminating substances, you must thoroughly clean and decontaminate the device/replacement part before returning it in order to ensure that all hollow areas are free from hazardous substances. Check the item after it has been cleaned.

  Any devices/replacement parts returned without a decontamination declaration will be cleaned at your expense before further processing.

The forms can be found on the Internet as well as in the documentation which comes with the device.

11.5 Disposal

Devices identified by this symbol may not be disposed of in the municipal waste disposal services under observance of the Directive 2002/96/EC on waste electronic and electrical equipment (WEEE).

They can be returned to the supplier within the EC or to a locally approved disposal service. Observe the specific regulations valid in your country.

Note

Special disposal required

The device includes components that require special disposal.

- Dispose of the device properly and environmentally through a local waste disposal contractor.

Interrupts, error and system alarms

12

12.1 Overview of status codes

Table 12- 1 Status code

Display	Hex	configured measured value source	PDM display	Cause	Measure
	80	Electronics temperature, sensor temperature, raw pressure value, secondary variable 1, secondary variable 2, measured value (primary variable), secondary variable 3, output, totalizer output	---	Normal operation	---
G_132	84	Electronics temperature, sensor temperature, raw pressure value, secondary variable 1, secondary variable 2, measured value (primary variable), secondary variable 3, output, totalizer output	Good, update.event	A parameter relevant to the behavior of the slave was changed. The display goes off after 10 sec.	Note to the control system.
G_137	89	Output, totalizer output	Good, warning limit exceeded	Configured low warning limit violated.	Correct error through user program.
G_138	8A	Output, totalizer output	Good, warning limit exceeded	High configured warning limit violated.	Correct error through user program.
G_141	8D	Electronics temperature, output, totalizer output	Good, alarm limit violated	Configured low alarm limit violated.	Correct error through user program.
G_142	8E	Electronics temperature, output, totalizer output	Good, alarm limit violated	High configured alarm limit violated.	Correct error through user program.
G_164	A4	Raw pressure value, secondary variable 1, secondary variable 2, measured value (primary variable), secondary variable 3, output, totalizer output	Good, Service required	Service interval expired: Calibrate or service.	Service, calibration of the electronics, or service of the sensor cell is necessary.
U_071	47	Output	Unsure, Last usable value, value constant	Input condition "fail safe" is fulfilled, the parameterized safety setting is set to "keep last valid value".	Check the data measurement.

Display	Hex	configured measured value source	PDM display	Cause	Measure
U_072	48	Totalizer output	Unsure, Replacement value	Use of the totalizer block if the measured value status is "Bad" and the parameterized safety setting is "Safe operation". The summed value changes. Failure behavior = safe operation.	Check the data measurement.
U_075	4B	Output, totalizer output	Unsure, Replacement value, value constant	Value is not an automatic measurement value. A parameterizable, static replacement value or preset value is marked in this manner.	Check the data measurement.
U_079	4F	Output, totalizer output	Unsure, Initial value, value constant	An initial value is written to the device memory after startup.	Throw away the value in the application program.
U_080	50	Raw pressure value, secondary variable 1, secondary variable 2, measured value (primary variable), secondary variable 3, output, totalizer output	Unsure, Value inexact	Impermissible operating parameter or service alarm.	Check the operating parameters, e.g. the permissible ambient temperature. Immediate service required.
U_081	51	Raw pressure value, secondary variable 1, secondary variable 2, measured value (primary variable), secondary variable 3, output, totalizer output	Unsure, Value inexact, limit value violated	Low nominal range measurement limit violated (<0%).	Increase the pressure in the positive direction.
U_082	52	Raw pressure value, secondary variable 1, secondary variable 2, measured value (primary variable), secondary variable 3, output, totalizer output	Unsure, Value inexact, limit value violated	High nominal range measurement limit violated (>100%).	Reduce the pressure.
B_000	00	Output (cyclical data only), totalizer output (cyclical data only)	Bad	Used if no other information is available. Device does not exist or cyclical connection is interrupted.	-
B_004	04	Raw pressure value, secondary variable 1, secondary variable 2, measured value (primary variable), secondary variable 3, output 1), totalizer output 2)	Bad, Configuration error	Calibration span too small.	Repeat the calibration procedure with pressure values which are farther apart.
B_011	0B	Secondary variable 3	Bad, not connected, value constant	Variable is not calculated	Correct the "transmitter type" setting.

Display	Hex	configured measured value source	PDM display	Cause	Measure
B_012	0C	Raw pressure value, secondary variable 1, secondary variable 2, measured value (primary variable), secondary variable 3, output 1), totalizer output 2)	Bad, Device error	Device has an irreparable error	Replace the electronics.
B_015	0F	Raw pressure value, secondary variable 1, secondary variable 2, measured value (primary variable), secondary variable 3, output 1), totalizer output 2)	Bad, Device error, value constant	Device has an irreparable error	Replace the electronics.
B_016	10	Raw pressure value, secondary variable 1, secondary variable 2, measured value (primary variable), secondary variable 3, output 1), totalizer output 2)	Bad, Sensor error	Sensor indicates an error.	Have a service technician check the sensor.
B_017	11	Raw pressure value, secondary variable 1, secondary variable 2, measured value (primary variable), secondary variable 3, output 1), totalizer output 2)	Bad, Sensor error, limit value violated	Negative pressure too high. Low control limit violated (<-20% of nominal measurement range).	Increase the pressure in the positive direction.
B_018	12	Raw pressure value, secondary variable 1, secondary variable 2, measured value (primary variable), secondary variable 3, output 1), totalizer output 2)	Bad, Sensor error, limit value violated	Positive pressure too high. High control limit violated (>120% of nominal measurement range).	Reduce the pressure.
B_031	1F	Output, totalizer output	Bad, Out of service, value constant	Function block was placed out of service with a target mode command. A parameterized safety value is output.	For normal operation, reset the target mode to AUTO.
B_060	3C	Output	Bad; configuration error	Device is not yet in safe state.	Complete PROFIsafe commissioning.

[1] Only if the failure behavior of the analog input function block is set to "The incorrectly calculated measured value is on output".

[2] Only if the failure behavior of the totalizer function block has been set to "Operation".

See also

Error display (Page 74)

Status display (Page 76)

Status (Page 167)

12.2 Errors

Errors and error correction

Errors	Cause	Measure
Measured value		
Measured value shows up on the display but is not displayed in the control system.	• Mode 15	• Check whether the bus address on the device matches the bus address in the control system. If it does not match, correct the bus address.
	• Mode 16	• Set "ident" in mode 16.

Table 12- 2 Error message

Display	PDM display	Cause	Measure
F_001	-	Local operation blocked.	Remove write protection.
F_003	-	Changes to the bus address and device operating type are not possible, since the device is in communication with a class 1 master.	End communication with class 1 master.
F_004	-	Display overflow.	Check settings of physical unit and position of decimal point, and adjust to the current measured value.
F_005	-	Value is read-only.	-
F_006	-	Correction not successful.	Check calibration span and repeat procedure.
F_007	-	After zero-point calibration, measurements no longer possible in entire measurement range.	Check measurement range, decrease correction if necessary.
F_008	-	Local operation blocked by SIMATIC PDM.	Use SIMATIC PDM to set the "Local operation" parameter to "released".

See also

Status (Page 167)

Technical data

13

13.1 Overview of technical data

Introduction

The following overview of technical data provides you with a quick and easy access to relevant data and characteristic numbers.

Remember that tables in part contain the data of the three communication types HART, PROFIBUS and FOUNDATION™ Fieldbus. This data deviates in many cases. Therefore, adhere to the communication type used by you when using the technical data.

Contents of the chapter

- SITRANS P DS III input (Page 194)
- SITRANS P410 input (Page 200)
- Output (Page 202)
- Measuring accuracy of SITRANS P DS III (Page 203)
- Measuring accuracy of SITRANS P410 (Page 211)
- Operating conditions (Page 214)
- Construction (Page 218)
- Display, keyboard and auxiliary power (Page 224)
- Certificates and approvals (Page 225)
- PROFIBUS communication (Page 227)

13.2 SITRANS P DS III input

Gauge pressure input			
Measured variable	Gauge pressure		
Span continuously adjustable) or measuring range, max. operating pressure (in accordance with 97/23/EC Pressure Equipment Directive) and max. test pressure (in accordance with DIN 16086) (for oxygen measurement, max. 100 bar and 60 °C ambient temperature/process temperature)	Span [1]	Maximum operating pressure MAWP (PS)	Maximum test pressure
	8.3 … 250 mbar	4 bar	6 bar
	0.83 ... 25 kPa	400 kPa	0.6 MPa
	0.12 … 3.6 psi	58 psi	87 psi
	0.01 … 1 bar	4 bar	6 bar
	1 ... 100 kPa	400 kPa	0.6 MPa
	0.15 … 14.5 psi	58 psi	87 psi
	0.04 … 4 bar	7 bar	10 bar
	4 ... 400 kPa	0.7 MPa	1 MPa
	0.58 … 58 psi	102 psi	145 psi
	0.16 … 16 bar	21 bar	32 bar
	16 ... 1600 kPa	2.1 MPa	3.2 MPa
	2.3 … 232 psi	305 psi	464 psi
	0.63 … 63 bar	67 bar	100 bar
	63 ... 6300 kPa	6.7 MPa	10 MPa
	9.1 … 914 psi	972 psi	1450 psi
	1.6 … 160 bar	167 bar	250 bar
	0.16 ... 16 MPa	16.7 MPa	2.5 MPa
	23 … 2321 psi	2422 psi	3626 psi
	4 … 400 bar	400 bar	600 bar
	0.4 ... 40 MPa	40 MPa	60 MPa
	58 … 5802 psi	5802 psi	8702 psi
	7 … 700 bar	800 bar	800 bar
	0.7 ... 70 MPa	80 MPa	80 MPa
	102 ... 10153 psi	11603 psi	11603 psi
Low measuring limit[2]			
• Measuring cell with silicone oil filling	30 mbar a/3 kPa a/0.44 psi a		
• Measuring cell with inert liquid	30 mbar a/3 kPa a/0.44 psi a		
Upper measuring limit	100 % of max. span (for oxygen measurement: max. 100 bar/10 MPa/1450 psi and 60 °C ambient temperature/process temperature)		
Start of scale value	Between the measuring limits (fully adjustable)		

[1] Order the nominal measuring range with the order option Y01 for PROFIBUS PA or FOUNDATION Fieldbus.

[2] With 250mbar/25 kPa/3.6 psi measuring cells, the lower measuring limit is 750 mbar a/75 kPa a/10.8 psi a. The measuring cell is vacuum-tight down to 30 mbar a/3 kPa a/0.44 psi a.

gauge pressure input, with flush mounted diaphragm			
Measured variable	Gauge pressure		
Span (continuously adjustable) or measuring range, max. operating pressure and max. test pressure	Span [1]	Maximum operating pressure MAWP (PS)	Maximum test pressure
	0.01 … 1 bar	4 bar	6 bar
	1 ... 100 kPa	400 kPa	0.6 MPa
	0.15 … 14.5 psi	58 psi	87 psi
	0.04 … 4 bar	7 bar	10 bar
	4 ... 400 kPa	0.7 MPa	1 MPa
	0.58 … 58 psi	102 psi	145 psi
	0.16 … 16 bar	21 bar	32 bar
	0.06 ... 1600 kPa	2.1 MPa	3.2 MPa
	2.3 … 232 psi	305 psi	464 psi
	0.6 … 63 bar	67 bar	100 bar
	0.06 ... 6.3 MPa	6.7 MPa	10 MPa
	9.1 … 914 psi	972 psi	1450 psi
Lower measuring limit			
• Measuring cell with silicone oil filling	100 mbar a/10 kPa a/1.45 psi a		
• Measuring cell with inert liquid	100 mbar a/10 kPa a/1.45 psi a		
• Measuring cell with neobee	100 mbar a/10 kPa a/1.45 psi a		
Upper measuring limit	100% of maximum span		

[1] Order the nominal measuring range with the order option Y01 for PROFIBUS PA or FOUNDATION Fieldbus.

Absolute pressure input, with flush-mounted diaphragm			
Measured variable	Absolute pressure		
Span (continuously adjustable) or measuring range, max. operating pressure and max. test pressure	Span [1]	Maximum operating pressure MAWP (PS)	Maximum test pressure
	43 … 1300 mbar a	2.6 bar a	10 bar a
	4.3 ... 130 kPa a	260 kPa a	1 MPa a
	17 … 525 inH_2O a	37.7 psi a	145 psi a
	160 … 5000 mbar a	10 bar a	30 bar a
	16 ... 500 kPa a	1 MPa a	3 MPa a
	2.32 … 72.5 psi a	145 psi a	435 psi a
	1 … 30 bar a	45 bar a	100 bar a
	0.1 ... 3 MPa a	4.5 MPa	10 MPa a
	14.5 … 435 psi a	653 psi a	1450 psi a
	Depending on the process connection, the span may differ from these values		
Lower measuring limit	0 mbar a/kPa a/psi a		
Upper measuring limit	100% of maximum span		

[1] Order the nominal measuring range with the order option Y01 for PROFIBUS PA or FOUNDATION Fieldbus.

Input pressure transmitter with PMC connection			
Measured variable	Gauge pressure		
Span (continuously adjustable) or measuring range, max. operating pressure and max. test pressure	Span[1) 2)]	Maximum operating pressure MAWP (PS)	Maximum test pressure
	0.01 … 1 bar	4 bar	6 bar
	1 ... 100 kPa	400 kPa	600 kPa
	0.15 … 14.5 psi	58 psi	87 psi
	0.04 … 4 bar	7 bar	10 bar
	4 ... 400 kPa	700 kPa	1 MPa
	0.58 … 58 psi	102 psi	145 psi
	0.16 … 16 bar	21 bar	32 bar
	0.016... 1.6 MPa	2.1 MPa	3.2 MPa
	2.3 … 232 psi	305 psi	464 psi
Lower measuring limit			
• Measuring cell with silicone oil filling [2)]	100 mbar a/10 kPa a/1.45 psi a		
• Measuring cell with inert liquid [2)]	100 mbar a/10 kPa a/1.45 psi a		
• Measuring cell with neobee [2)]	100 mbar a/10 kPa a/1.45 psi a		
Upper measuring limit	100% of maximum span		

1) Order the nominal measuring range with the order option Y01 for PROFIBUS PA or FOUNDATION Fieldbus.

2) For PMC-Style Minibolt, the span should not be less than 500 mbar

Absolute pressure input (from the gauge pressure series)			
Measured variable	Absolute pressure		
Span (continuously adjustable) or measuring range, maximum operating pressure (as per 97/23/EC pressure device guideline) and maximum test pressure (as per DIN 16086)	Span [1)]	Maximum operating pressure MAWP (PS)	Maximum test pressure
	8.3 … 250 mbar a	1.5 bar a	6 bar a
	0.83 ... 25 kPa a	150 kPa a	600 kPa a
	3 … 100 inH_2O a	21.8 psi a	87 psi a
	43 … 1300 mbar a	2.6 bar a	10 bar a
	4.3 ... 130 kPa a	260 kPa a	1 MPa a
	17 … 525 inH_2O a	37.7 psi a	145 psi a
	160 … 5000 mbar a	10 bar a	30 bar a
	16 ... 500 kPa a	1 MPa a	3 MPa a
	2.32 … 72.5 psi a	145 psi a	435 psi a
	1 … 30 bar a	45 bar a	100 bar a
	0.1 ... 3 MPa a	4.5 MPa a	10 MPa a
	14.5 … 435 psi a	653 psi a	1450 psi a
Lower measuring limit			
• Measuring cell with silicone oil filling	0 mbar a/kPa a/psi a		
• Measuring cell with inert liquid			

Absolute pressure input (from the gauge pressure series)	
for process temperature -20°C < ϑ ≤ 60°C (-4°F < ϑ ≤ +140°F)	30 mbar a/3 kPa a/0.44 psi a
for process temperature 60°C < ϑ ≤ 100°C (max. 85°C for measuring cell 30 bar) (140°F < ϑ ≤ 212°F (max. 185°F for measuring cell 435 psi))	30 mbar a + 20 mbar a • (ϑ - 60 °C)/°C 3 kPa a + 2 kPa a • (ϑ - 60 °C)/°C 0.44 psi a + 0.29 psi a • (ϑ - 108 °F)/°F
Upper measuring limit	100 % of max. span (for oxygen measurement: max. 100 bar/10 MPa/1450 psi and 60 °C ambient temperature/process temperature)
Start of scale value	Between the measuring limits (fully adjustable)

1) Order the nominal measuring range with the order option Y01 for PROFIBUS PA or FOUNDATION Fieldbus.

Absolute pressure input (from the differential pressure series)		
Measured variable	Absolute pressure	
Span (continuously adjustable) or measuring range and max. operating pressure (in accordance with 97/23/EC Pressure Equipment Directive)	Span 1)	Maximum operating pressure MAWP (PS)
	8.3 … 250 mbar a	32 bar a
	0.83 ... 25 kPa a	3.2 MPa a
	3 … 100 inH_2O a	464 psi a
	43 … 1300 mbar a	32 bar a
	4.3 ... 130 kPa a	3.2 MPa a
	17 … 525 inH_2O a	464 psi a
	160 … 5000 mbar a	32 bar a
	16 ... 500 kPa a	3.2 MPa a
	2.32 … 72.5 psi a	464 psi a
	1 … 30 bar a	160 bar a
	0.1 ... 3 MPa a	16 MPa a
	14.5 … 435 psi a	2320 psi a
	5.3 … 100 bar a	160 bar a
	0.5 ... 10 MPa a	16 MPa a
	76.9 … 1450 psi a	2320 psi a
Lower measuring limit		
• Measuring cell with silicone oil filling	0 mbar a /kPa a /psi a	
• Measuring cell with inert liquid		
for process temperature -20°C < ϑ ≤ 60°C (-4°F < ϑ ≤ +140°F)	30 mbar a /3 kPa a /0.44 psi a	
for process temperature 60°C < ϑ ≤ 100°C (max. 85°C for measuring cell 30 bar) (140°F < ϑ ≤ 212°F (max. 185°F for measuring cell 435 psi))	30 mbar a + 20 mbar a • (ϑ - 60 °C)/°C 3 kPa a + 2 kPa a • (ϑ - 60 °C)/°C 0.44 psi a + 0.29 psi a • (ϑ - 108 °F)/°F	

Absolute pressure input (from the differential pressure series)	
Upper measuring limit	100 % of max. span (for oxygen measurement: max. 100 bar/10 MPa/1450 psi and 60 °C ambient temperature/process temperature)
Start of scale value	Between the measuring limits (fully adjustable)

1) Order the nominal measuring range with the order option Y01 for PROFIBUS PA or FOUNDATION Fieldbus.

Differential pressure and flow rate input		
Measured variable	Differential pressure and flow rate	
Span (continuously adjustable) or measuring range and max. operating pressure (in accordance with 97/23/EC Pressure Equipment Directive)	Span 1)	Maximum operating pressure MAWP (PS)
	1 ... 20 mbar	32 bar
	0.1 ... 2 kPa	3.2 MPa
	0.4015 … 8.031 inH_2O	464 psi
	1 ... 60 mbar	160 bar
	0.1 ... 6 kPa	16 MPa
	0.4015 … 24.09 inH_2O	2320 psi
	2.5 … 250 mbar	160 bar
	0.2 ... 25 kPa	16 MPa
	1.004 … 100.4 inH_2O	2320 psi
	6 … 600 mbar	160 bar
	0.6 ... 60 kPa	16 MPa
	2.409 … 240.9 inH_2O	2320 psi
	16 … 1600 mbar	160 bar
	1.6 ... 160 kPa	16 MPa
	6.424 … 642.4 inH_2O	2320 psi
	50 … 5000 mbar	160 bar
	5 ... 500 kPa	16 MPa
	20.08 … 2008 inH_2O	2320 psi
	0.3 … 30 bar	160 bar
	0.03 ... 3 MPa	16 MPa
	4.35 … 435 psi	2320 psi
	2.5 … 250 mbar	420 bar
	0.25 ... 25 kPa	42 MPa
	1.004 … 100.4 inH_2O	6091 psi
	6 … 600 mbar	420 bar
	0.6 ... 60 kPa	42 MPa
	2.409 … 240.9 inH_2O	6091 psi
	16 … 1600 mbar	420 bar
	1.6 ... 160 kPa	42 MPa
	6.424 … 642.4 inH_2O	6091 psi

Differential pressure and flow rate input		
	50 … 5000 mbar	420 bar
	5 ... 500 kPa	42 MPa
	20.08 … 2008 inH_2O	6091 psi
	0.3 … 30 bar	420 bar
	0.03 ... 3 MPa	42 MPa
	4.35 … 435 psi	6091 psi
Lower measuring limit		
• Measuring cell with silicone oil filling	-100% of max. measuring range (-33 % for 30 bar /3 MPa /435 psi measuring cell) or 30 mbar a /3 kPa a /0.44 psi a	
• Measuring cell with inert liquid		
for process temperature -20°C < ϑ ≤ 60°C (-4°F < ϑ ≤ +140°F)	-100 % of max. measuring range (-33 % for 30 bar/3 MPa/435 psi measuring cell) or 30 mbar a/3 kPa a/0.44 psi a	
for process temperature 60°C < ϑ ≤ 100°C (max. 85°C for measuring cell 30 bar) (140°F < ϑ ≤ 212°F (max. 185°F for measuring cell 435 psi))	• -100% of max. measuring range (-33% for 30 bar/3 kPa/435 psi measuring cell) • 30 mbar a + 20 mbar a • (ϑ - 60 °C)/°C 3 kPa a + 2 kPa a • (ϑ - 60 °C)/°C 0.44 psi a + 0.29 psi a • (ϑ - 108 °F)/°F	
Upper measuring limit	100 % of max. span (for oxygen measurement: max. 100 bar/10 MPa/1450 psi and 60 °C ambient temperature/process temperature)	
Start of scale value	Between the measuring limits (fully adjustable)	

[1] Order the nominal measuring range with the order option Y01 for PROFIBUS PA or FOUNDATION Fieldbus.

Level input		
Measured variable	Level	
Span (continuously adjustable) or measuring range and max. operating pressure (in accordance with 97/23/EC Pressure Equipment Directive)	Span [1]	Maximum operating pressure MAWP (PS)
	25 … 250 mbar 2.5 ... 25 kPa 10 … 100 inH_2O	see the mounting flange
	25 … 600 mbar 2.5 ... 60 kPa 10 … 240 inH_2O	
	53 … 1600 mbar 5.3 ... 160 kPa 021 … 640 inH_2O	
	160 … 5000 mbar 16 ... 500 kPa 2.32 … 72.5 psi	

Level input	
Lower measuring limit	
• Measuring cell with silicone oil filling	-100% of max. measuring range or 30 mbar a/3 kPa a/0.44 psi a depending on the mounting flange
• Measuring cell with inert liquid	-100% of max. measuring range or 30 mbar a/3 kPa a/0.44 psi a depending on the mounting flange
Upper measuring limit	100% of maximum span
Start of scale value	between the measuring limits continuously adjustable

1) Order the nominal measuring range with the order option Y01 for PROFIBUS PA or FOUNDATION Fieldbus.

13.3 SITRANS P410 input

Gauge pressure input			
Measured variable	Gauge pressure		
Span (continuously adjustable) or measuring range, max. operating pressure (in accordance with 97/23/EC Pressure Equipment Directive) and max. test pressure (in accordance with DIN 16086).	Span 1)	Maximum operating pressure MAWP (PS)	Maximum test pressure
	0.01 … 1 bar	4 bar	6 bar
	1 ... 100 kPa	400 kPa	0.6 MPa
	0.15 … 14.5 psi	58 psi	87 psi
	0.04 … 4 bar	7 bar	10 bar
	4 ... 400 kPa	0.7 MPa	1 MPa
	0.58 … 58 psi	102 psi	145 psi
	0.16 … 16 bar	21 bar	32 bar
	16 ... 1600 kPa	2.1 MPa	3.2 MPa
	2.3 … 232 psi	305 psi	464 psi
	0.63 … 63 bar	67 bar	100 bar
	63 ... 6300 kPa	6.7 MPa	10 MPa
	9.1 … 914 psi	972 psi	1450 psi
	1.6 … 160 bar	167 bar	250 bar
	0.16 ... 16 MPa	16.7 MPa	2.5 MPa
	23 … 2321 psi	2422 psi	3626 psi
Lower measuring limit			
• Measuring cell with silicone oil filling	30 mbar a/3 kPa a/0.44 psi a		
Upper measuring limit	100% of maximum span		
Start of scale value	Between the measuring limits (fully adjustable)		

1) Order the nominal measuring range with the order option Y01 for PROFIBUS PA or FOUNDATION Fieldbus.

Differential pressure and flow rate input		
Measured variable	Differential pressure and flow rate	
Span (continuously adjustable) or measuring range and max. operating pressure (in accordance with 97/23/EC Pressure Equipment Directive)	Span [1]	Maximum operating pressure MAWP (PS)
	2.5 … 250 mbar	160 bar
	0.2 ... 25 kPa	16 MPa
	1.004 … 100.4 inH_2O	2320 psi
	6 … 600 mbar	160 bar
	0.6 ... 60 kPa	16 MPa
	2.409 … 240.9 inH_2O	2320 psi
	16 … 1600 mbar	160 bar
	1.6 ... 160 kPa	16 MPa
	6.424 … 642.4 inH_2O	2320 psi
	50 … 5000 mbar	160 bar
	5 ... 500 kPa	16 MPa
	20.08 … 2008 inH_2O	2320 psi
	0.3 … 30 bar	160 bar
	0.03 ... 3 MPa	16 MPa
	4.35 … 435 psi	2320 psi
	6 … 600 mbar	420 bar
	0.6 ... 60 kPa	42 MPa
	2.409 … 240.9 inH_2O	6091 psi
	16 … 1600 mbar	420 bar
	1.6 ... 160 kPa	42 MPa
	6.424 … 642.4 inH_2O	6091 psi
	50 … 5000 mbar	420 bar
	5 ... 500 kPa	42 MPa
	20.08 … 2008 inH_2O	6091 psi
	0.3 … 30 bar	420 bar
	0.03 ... 3 MPa	42 MPa
	4.35 … 435 psi	6091 psi
Lower measuring limit		
• Measuring cell with silicone oil filling	-100 % of max. measuring range (-33 % for 30 bar/3 MPa/435 psi measuring cell) or 30 mbar a/3 kPa a/0.44 psi a	
Upper measuring limit	100% of maximum span	
Start of scale value	Between the measuring limits (fully adjustable)	

[1] Order the nominal measuring range with the order option Y01 for PROFIBUS PA or FOUNDATION Fieldbus.

13.4 Output

Output		
	HART	**PROFIBUS PA and FOUNDATION Fieldbus**
Output signal	4 … 20 mA	Digital PROFIBUS PA or FOUNDATION™ Fieldbus signal
• Low saturation limit (fully adjustable)	3.55 mA, set to 3.84 mA in the factory	–
• High saturation limit (fully adjustable)	23 mA, set to 20.5 mA or optionally 22.0 mA in the factory	–
• Ripple (without HART communication)	I_{SS} ≤ 0.5 % of the max. output current	–
adjustable time constants damping coefficient	0 … 100 s, continuously adjustable	0 … 100 s, continuously adjustable
Adjustable time constants (T63) with local operation	0 … 100 s, in steps of 0.1 s Factory-set to 2 s	0 … 100 s, in steps of 0.1 s Factory-set to 2 s
• Current transmitter	3.55 … 23 mA	–
• Failure signal	3.55 … 23 mA	–
Load	Resistor R [Ω]	–
• Without HART communication	$R = \frac{U_H - 10{,}5\ V}{23\ mA}$ U_H Power supply in V	–
• With HART communication		–
HART communicator (Handheld)	R =230 … 1100 Ω	–
SIMATIC PDM	R =230 … 500 Ω	–
Characteristic curve	• Linearly increasing or linearly decreasing • Linear increase or decrease or root extraction increase (only for differential pressure and flow rate)	
Bus physics	–	IEC 61158-2
Polarity-independent	–	Yes

13.5 Measuring accuracy of SITRANS P DS III

Measuring accuracy (as per EN 60770-1) gauge pressure			
Reference conditions	• Rising characteristic curve • Start of scale value 0 bar/kPa/psi • Seal diaphragm stainless steel • Measuring cell with silicone oil filling • Room temperature 25 °C (77 °F)		
Measuring span ratio r (spread, Turn-Down)	r = max. measuring span/set measuring span and nominal measuring range		
Conformity error at limit point setting, including hysteresis and repeatability			
• Linear characteristic curve	r ≤ 1.25		1.25 < r ≤ 30
250 mbar/25 kPa/3.6 psi	≤ 0.065%		≤ (0.008 • r + 0.055) %
• Linear characteristic curve	r ≤ 5		5 < r ≤ 100
1 bar/100 kPa/14.5 psi 4 bar/400 kPa/58 psi 16 bar/1.6 MPa/232 psi 63 bar/6.3 MPa/914 psi 160 bar/16 MPa/12321 psi	≤ 0.065%		≤ (0.004 • r + 0.045) %
• Linear characteristic curve	r ≤ 3	3 < r ≤ 10	10 < r ≤ 100
400 bar/40 MPa/5802 psi 700 bar/70 MPa/10152 psi	≤ 0.075%	≤ (0.0029 • r + 0.071) %	≤ (0.005 • r + 0.05) %
Effect of ambient temperature	In percent per 28 °C (50 °F)		
• 250 mbar/25 kPa/3.6 psi	≤ (0.16 • r + 0.1) %		
• 1 bar/100 kPa/14.5 psi	≤ (0.05 • r + 0.1) %		
• 4 bar/400 kPa/58 psi 16 bar/1.6 MPa/232 psi 63 bar/6.3 MPa/914 psi 160 bar/16 MPa/2321 psi 400 bar/40 MPa/5802 psi	≤ (0.025 • r + 0.125) %		
• 700 bar/70 MPa/10152 psi	≤ (0.08 • r + 0.16) %		
Long-term stability at ±30 °C (±54 °F)			
• 250 mbar/25 kPa/3.6 psi	Per year ≤ (0.25 • r) %		
• 1 bar/100 kPa/14.5 psi 4 bar/400 kPa/58 psi	In 5 years ≤ (0.25 • r) %		

Measuring accuracy (as per EN 60770-1) gauge pressure	
• 16 bar/1.6 MPa/232 psi 63 bar/6.3 MPa/914 psi 160 bar/16 MPa/2321 psi 400 bar/40 MPa/5802 psi	In 5 years ≤ (0.125 • r) %
• 700 bar/70 MPa/10152 psi	In 5 years ≤ (0.25 • r) %
Step response time T_{63} (without electrical damping)	Approx. 0.15 s
Effect of mounting position	≤ 0.05 mbar/0.005 kPa/0.000725 psi per 10° incline (zero-point correction is possible with position error compensation)
Effect of auxiliary power supply	In percent per change in voltage 0.005 % per 1 V
Measured value resolution for PROFIBUS PA or FOUNDATION Fieldbus	$3 \cdot 10^{-5}$ of the nominal measuring range

Gauge pressure measuring accuracy, with flush mounted diaphragm	
Reference conditions	• Rising characteristic curve • Start of scale value 0 bar/kPa/psi • Seal diaphragm stainless steel • Measuring cell with silicone oil filling • Room temperature 25 °C (77 °F)
Measuring span ratio r (spread, Turn-Down)	r = max. measuring span/set measuring span and nominal measuring range
Conformity error at limit point setting, including hysteresis and repeatability	
• Linear characteristic curve	
r ≤ 5	≤ 0.075 %
5 < r ≤ 100	≤ (0.005 • r + 0.05) %
Effect of ambient temperature	
In percent per 28 °C (50 °F)	≤ (0.08 • r + 0.16)
Effect of process temperature	In pressure per temperature change
• Temperature difference between medium temperature and ambient temperature	3 mbar per 10 K 0.3 kPa per 10 K 0.04 psi per 10 K
Long-term stability at ±30 °C (±54 °F)	In 5 years ≤ (0.25 • r) %
Step response time T_{63} without electrical damping	Approx. 0.2 s
Effect of mounting position	In pressure per change of angle 0.4 mbar/0.04 kPa/0.006 psi per 10° incline (zero-point correction is possible with position error compensation)

Gauge pressure measuring accuracy, with flush mounted diaphragm	
Effect of auxiliary power supply	In percent per change in voltage 0.005 % per 1 V
Measured value resolution for PROFIBUS PA or FOUNDATION Fieldbus	$3 \cdot 10^{-5}$ of the nominal measuring range

Absolute pressure measuring accuracy with flush diaphragm	
Reference conditions	• Rising characteristic curve • Start of scale value 0 bar/kPa/psi • Seal diaphragm stainless steel • Measuring cell with silicone oil filling • Room temperature 25 °C (77 °F)
Measuring span ratio r (spread, Turn-Down)	r = max. measuring span/set measuring span and nominal measuring range
Conformity error at limit point setting, including hysteresis and repeatability	
• Linear characteristic curve	
r ≤ 10	≤ 0.2%
10 < r ≤ 30	≤ 0.4%
Effect of ambient temperature	
In percent per 28 °C (50 °F)	≤ (0.16 • r + 0.24)
Effect of process temperature	In pressure per temperature change
• Temperature difference between medium temperature and ambient temperature	3 mbar per 10 K 0.3 kPa per 10 K 0.04 psi per 10 K
Long-term stability at ±30 °C (±54 °F)	In 5 years ≤ (0.25 • r) %
Step response time T_{63} without electrical damping	Approx. 0.2 s
Effect of mounting position	In pressure per change of angle 0.04 kPa/0.4 mbar/0.006 psi per 10° incline (zero-point correction is possible with position error compensation)
Effect of auxiliary power supply	In percent per change in voltage 0.005 % per 1 V
Measured-value resolution for PROFIBUS PA or FOUNDATION Fieldbus	$3 \cdot 10^{-5}$ of the nominal measuring range

Measuring accuracy (according to EN 60770-1) of pressure transmitter with PMC connection	
Reference conditions	• Rising characteristic curve • Start of scale value 0 bar/kPa/psi • Seal diaphragm stainless steel • Measuring cell with silicone oil filling • Room temperature 25 °C (77 °F)
Measuring span ratio r (spread, Turn-Down)	r = max. measuring span/set measuring span and nominal measuring range
Conformity error at limit point setting, including hysteresis and repeatability	
• Linear characteristic curve	
r ≤ 5	≤ 0.075 %
5 < r ≤ 100	≤ (0.005 • r + 0.05) %
Effect of ambient temperature	
In percent per 28 °C (50 °F)	≤ (0.08 • r + 0.16)
Effect of process temperature	In pressure per temperature change
• Temperature difference between medium temperature and ambient temperature	3 mbar per 10 K 0.3 kPa per 10 K 0.04 psi per 10 K
Long-term stability at ±30 °C (±54 °F)	In 5 years ≤ (0.25 • r) %
Step response time T_{63} without electrical damping	Approx. 0.2 s
Effect of mounting position	In pressure per change of angle ≤ 0.1 mbar/0.01 kPa/0.00145 psi per 10° incline (zero point correction is possible with position error compensation)
Effect of auxiliary power supply	In percent per change in voltage 0.005 % per 1 V
Measured-value resolution for PROFIBUS PA or FOUNDATION Fieldbus	$3 \cdot 10^{-5}$ of the nominal measuring range

Absolute pressure measuring accuracy (from gauge and differential pressure series)	
Reference conditions	• Rising characteristic curve • Start of scale value 0 bar/kPa/psi • Seal diaphragm stainless steel • Measuring cell with silicone oil filling • Room temperature 25 °C (77 °F)
Measuring span ratio r (spread, Turn-Down)	r = max. measuring span/set measuring span and nominal measuring range
Conformity error at limit point setting, including hysteresis and repeatability	

Absolute pressure measuring accuracy (from gauge and differential pressure series)	
• Linear characteristic curve	
r ≤ 10	≤ 0.1%
10 < r ≤ 30	≤ 0.2%
• Effect of ambient temperature	In percent per 28 °C (50 °F)
• 250 mbar/25 kPa/3.6 psi	≤ (0.15 • r + 0.1)
• 1300 mbar a/130 kPa a/18.8 psi a 5 bar a/500 kPa a/72.5 psi a 30 bar a/3000 kPa a/435 psi a 100 bar a/10 MPa a/1450.3 psi a 160 bar a/16 MPa a/2321 psi a 400 bar a/40 MPa a/5802 psi a 700 bar a/70 MPa a/10152.6 psi a	≤ (0.08 • r + 0.16)
Long-term stability at ±30 °C (±54 °F)	In 5 years ≤ (0.25 • r) %
Step response time T_{63} without electrical damping	Approx. 0.2 s
Effect of mounting position	In pressure per change of angle • for absolute pressure (from the gauge pressure series): ≤ 0.05 mbar/0.005 kPa/0.000725 psi per 10° incline • for absolute pressure (from the differential pressure series): 0.7 mbar/0.07 kPa/0.001015 psi per 10° incline (zero-point correction is possible with position error compensation)
Effect of auxiliary power supply	In percent per change in voltage 0.005 % per 1 V
Measured value resolution for PROFIBUS PA or FOUNDATION Fieldbus	$3 \cdot 10^{-5}$ of the nominal measuring range

Differential pressure and flow rate measuring accuracy	
Reference conditions	• Rising characteristic curve • Start of scale value 0 bar/kPa/psi • Seal diaphragm stainless steel • Measuring cell with silicone oil filling • Room temperature 25 °C (77 °F)
Measuring span ratio r (spread, Turn-Down)	r = max. measuring span/set measuring span and nominal measuring range
Conformity error at limit point setting, including hysteresis and repeatability	

Differential pressure and flow rate measuring accuracy			
• Linear characteristic curve	r ≤ 5	5 < r ≤ 10	10 < r ≤ 20
20 mbar/2 kPa/0.29 psi	≤ 0.075 %	≤ (0.0029 • r + 0.071) %	≤ (0.0045 • r + 0.071) %
• Linear characteristic curve	r ≤ 5		5 < r ≤ 60
60 mbar/6 kPa/0.87 psi	≤ 0.075 %		≤ (0.005 • r + 0.05) %
• Linear characteristic curve	r ≤ 5		5 < r ≤ 100
250 mbar/25 kPa/3.63 psi 600 mbar/60 kPa/8.70 psi 1600 mbar/160 kPa/23.21 psi 5 bar/500 kPa/72.52 psi 30 bar/3 MPa/435.11 psi	≤ 0.065%		≤ (0.004 • r + 0.045) %
• Root extraction characteristic			
Flow > 50 %	r ≤ 5	5 < r ≤ 10	10 < r ≤ 20
• 20 mbar/2 kPa/0.29 psi	≤ 0.075 %	≤ (0.0029 • r + 0.071) %	≤ (0.0045 • r + 0.071) %
• Root extraction characteristic			
Flow > 50 %	r ≤ 5		5 < r ≤ 60
• 60 mbar/6 kPa/0.87 psi	≤ 0.075 %		≤ (0.005 • r + 0.05) %
• Root extraction characteristic			
Flow > 50 %	r ≤ 5		5 < r ≤ 100
• 250 mbar/25 kPa/3.63 psi 600 mbar/60 kPa/8.70 psi 1600 mbar/160 kPa/23.21 psi 5 bar/500 kPa/72.52 psi 30 bar/3 MPa/435.11 psi	≤ 0.065%		≤ (0.004 • r + 0.045) %
• Root extraction characteristic			
Flow 25 ... 50%	r ≤ 5	5 < r ≤10	10 < r ≤ 20
• 20 mbar/2 kPa/0.29 psi	≤ 0.15 %	≤ (0.0058 • r + 0.142) %	≤ (0.009 • r + 0.142) %
• Root extraction characteristic			
Flow 25 ... 50%	r ≤ 5		5 < r ≤ 60
• 60 mbar/6 kPa/0.87 psi	≤ 0.15 %		≤ (0.01 • r + 0.1) %
• Root extraction characteristic	r ≤ 5		5 < r ≤ 100
• 250 mbar/25 kPa/3.63 psi 600 mbar/60 kPa/8.70 psi 1600 mbar/160 kPa/23.21 psi 5 bar/500 kPa/72.52 psi 30 bar/3 MPa/435.11 psi	≤ 0.13%		≤ (0.008 • r + 0.9) %
Effect of ambient temperature	In percent per 28 °C (50 °F)		

Differential pressure and flow rate measuring accuracy	
• 20 mbar/2 kPa/0.29 psi	≤ (0.15 • r + 0.1) %
• 60 mbar/6 kPa/0.87 psi	≤ (0.075 • r + 0.1) %
• 250 mbar/25 kPa/3.63 psi 600 mbar/60 kPa/8.70 psi 1600 mbar/160 kPa/23.21 psi 5 bar/500 kPa/72.52 psi 30 bar/3 MPa/435.11 psi	≤ (0.025 • r + 0.125) %
Effect of static pressure	
• At the start of scale value	
20 mbar/2 kPa/0.29 psi	≤ (0.15 • r) % per 32 bar (zero-point correction is possible with position error compensation)
60 mbar/6 kPa/0.87 psi 250 mbar/25 kPa/3.63 psi 600 mbar/60 kPa/8.70 psi 1600 mbar/160 kPa/23.21 psi	≤ (0.1 • r) % per 70 bar (zero-point correction is possible with position error compensation)
5 bar/500 kPa/72.52 psi 30 bar/3 MPa/435.11 psi	≤ (0.2 • r) % per 70 bar (zero-point correction is possible with position error compensation)
• On the measuring span	
20 mbar/2 kPa/0.29 psi	≤ 0.2% per 32 bar
60 mbar/6 kPa/0.87 psi 250 mbar/25 kPa/3.63 psi 600 mbar/60 kPa/8.70 psi 1600 mbar/160 kPa/23.21 psi 5 bar/500 kPa/72.52 psi 30 bar/3 MPa/435.11 psi	≤ 0.14 % per 70 bar
Long-term stability at ±30 °C (±54 °F)	Static pressure max. 70 bar/7 MPa/1015 psi
• 20 mbar/2 kPa/0.29 psi	Per year ≤ (0.2 • r) %
• 60 mbar/6 kPa/0.87 psi 30 bar/3 MPa/435.11 psi	In 5 years ≤ (0.25 • r) %
• 250 mbar/25 kPa/3.63 psi 600 mbar/60 kPa/8.70 psi 1600 mbar/160 kPa/23.21 psi 5 bar/500 kPa/72.52 psi	In 5 years ≤ (0.125 • r) %
Step response time T_{63} without electrical damping	
• 20 mbar/2 kPa/0.29 psi 60 mbar/6 kPa/0.87 psi	Approx. 0.3 s
• 250 mbar/25 kPa/3.63 psi 600 mbar/60 kPa/8.70 psi 1600 mbar/160 kPa/23.21 psi 5 bar/500 kPa/72.52 psi 30 bar/3 MPa/435.11 psi	Approx. 0.2 s

Differential pressure and flow rate measuring accuracy	
Effect of mounting position	In pressure per change of angle ≤ 0.7 mbar/0.07 kPa/0.028 inH_2O per 10° incline (zero-point correction is possible with position error compensation)
Effect of auxiliary power supply	In percent per change in voltage 0.005 % per 1 V
Measured-value resolution for PROFIBUS PA or FOUNDATION Fieldbus	$3 \cdot 10^{-5}$ of the nominal measuring range

Level measuring accuracy				
Reference conditions	• Rising characteristic curve • Start of scale value 0 bar/kPa/psi • Seal diaphragm stainless steel • Measuring cell with silicone oil filling • Room temperature 25 °C (77 °F)			
Measuring span ratio r (spread, Turn-Down)	r = max. measuring span/set measuring span and nominal measuring range			
Conformity error at limit point setting, including hysteresis and repeatability				
• Linear characteristic curve	r ≤ 5	5 < r ≤ 10	5 < r ≤ 25	5 < r ≤ 30
250 mbar/25 kPa/3.63 psi	≤ 0.125%	≤ (0.007 • r + 0.09) %		
600 mbar/60 kPa/8.70 psi	≤ 0.125%		≤ (0.007 • r + 0.09) %	
1600 mbar/160 kPa/23.21 psi	≤ 0.125%			≤ (0.007 • r + 0.09) %
5 bar/500 kPa/72.52 psi	≤ 0.125%			≤ (0.007 • r + 0.09) %
Effect of ambient temperature	In percent per 28 °C (50 °F)			
• 250 mbar/25 kPa/3.63 psi	≤ (0.4 • r + 0.16) %			
• 600 mbar/60 kPa/8.70 psi	≤ (0.24 • r + 0.16) %			
• 1600 mbar/160 kPa/23.21 psi 5 bar/500 kPa/72.52 psi	≤ (0.2 • r + 0.16) %			
Effect of static pressure				
• At the start of scale value				
Measuring cell 250 mbar/25 kPa/3.63 psi	≤ (0.3 • r) % per nominal pressure			
Measuring cell 600 mbar/60 kPa/8.70 psi	≤ (0.15 • r) % per nominal pressure			

Level measuring accuracy	
Measuring cell 1600 mbar/160 kPa/23.21 psi Measuring cell 5 bar/500 kPa/72.52 psi	≤ (0.1 • r) % per nominal pressure
• On the measuring span	≤ (0.1 • r) % per nominal pressure
Long-term stability at ±30 °C (±54 °F)	in 5 years ≤ (0.25 • r) % static pressure max. 70 bar/7 MPa/1015 psi
Step response time T_{63} without electrical damping	Approx. 0.2 s
Effect of mounting position	depending on the fill fluid in the mounting flange
Effect of auxiliary power supply	In percent per change in voltage 0.005 % per 1 V
Measured value resolution for PROFIBUS PA or FOUNDATION Fieldbus	$3 • 10^{-5}$ of the nominal measuring range

13.6 Measuring accuracy of SITRANS P410

Measuring accuracy (as per EN 60770-1) gauge pressure		
Reference conditions	• Rising characteristic curve • Start of scale value 0 bar/kPa/psi • Seal diaphragm stainless steel • Measuring cell with silicone oil filling • Room temperature 25 °C (77 °F)	
Measuring span ratio r (spread, Turn-Down)	r = max. measuring span/set measuring span and nominal measuring range	
Conformity error at limit point setting, including hysteresis and repeatability		
• Linear characteristic curve	r ≤ 5	5 < r ≤ 100
1 bar/100 kPa/14.5 psi 4 bar400 kPa/58 psi 16 bar/1.6 MPa/232 psi 63 bar/6.3 MPa/914 psi 160 bar/16 MPa/2321 psi	≤ 0.04%	≤ (0.004 • r + 0.045) %
Effect of ambient temperature	In percent per 28 °C (50 °F)	
• 1 bar/100 kPa/14.5 psi	≤ (0.05 • r + 0.1) %	
• 4 bar/400 kPa/58 psi 16 bar/1.6 MPa/232 psi 63 bar/6.3 MPa/914 psi 160 bar/16 MPa/2321 psi	≤ (0.025 • r + 0.125) %	

Measuring accuracy (as per EN 60770-1) gauge pressure	
Long-term stability at ±30 °C (±54 °F)	
• 1 bar/100 kPa/14.5 psi 4 bar/400 kPa/58 psi	In 5 years ≤ (0.25 • r) %
• 16 bar/1.6 MPa/232 psi 63 bar/6.3 MPa/914 psi 160 bar/16 MPa/2321 psi	In 5 years ≤ (0.125 • r) %
Step response time T_{63} (without electrical damping)	Approx. 0.15 s
Effect of mounting position	≤ 0.05 mbar/0.005 kPa/0.02 inH_2O per 10° incline (zero point correction is possible with position error compensation)
Effect of auxiliary power supply	In percent per change in voltage 0.005 % per 1 V
Measured value resolution for PROFIBUS PA or FOUNDATION Fieldbus	3 • 10^{-5} of the nominal measuring range

Differential pressure and flow rate measuring accuracy		
Reference conditions	• Rising characteristic curve • Start of scale value 0 bar/kPa/psi • Seal diaphragm stainless steel • Measuring cell with silicone oil filling • Room temperature 25 °C (77 °F)	
Measuring span ratio r (spread, Turn-Down)	r = max. measuring span/set measuring span and nominal measuring range	
Conformity error at limit point setting, including hysteresis and repeatability		
• Linear characteristic curve	r ≤ 5	5 < r ≤ 100
250 mbar/25 kPa/3.63 psi 600 mbar/60 kPa/8.70 psi 1600 mbar/160 kPa/23.21 psi 5 bar/500 kPa/72.52 psi 30 bar/3 MPa/435.11 psi	≤ 0.04%	≤ (0.004 • r + 0.045) %
• Root extraction characteristic		
Flow > 50 %	r ≤ 5	5 < r ≤ 30
• 250 mbar/25 kPa/3.63 psi 600 mbar/60 kPa/8.70 psi 1600 mbar/160 kPa/23.21 psi 5 bar/500 kPa/72.52 psi 30 bar/3 MPa/435.11 psi	≤ 0.04%	≤ (0.004 • r + 0.045) %
Flow 25 ... 50%	r ≤ 5	5 < r ≤ 30

Differential pressure and flow rate measuring accuracy		
• 250 mbar/25 kPa/3.63 psi 600 mbar/60 kPa/8.70 psi 1600 mbar/160 kPa/23.21 psi 5 bar/500 kPa/72.52 psi 30 bar/3 MPa/435.11 psi	≤ 0.08%	≤ (0.008 • r + 0.09) %
Effect of ambient temperature	In percent per 28 °C (50 °F)	
• 250 mbar/25 kPa/3.63 psi 600 mbar/60 kPa/8.70 psi 1600 mbar/160 kPa/23.21 psi 5 bar/500 kPa/72.52 psi 30 bar/3 MPa/435.11 psi	≤ (0.025 • r + 0.125) %	
Effect of static pressure		
• At the start of scale value		
250 mbar/25 kPa/3.63 psi 600 mbar/60 kPa/8.70 psi 1600 mbar/160 kPa/23.21 psi	≤ (0.1 • r) % per 70 bar (zero-point correction is possible with position error compensation)	
5 bar/500 kPa/72.52 psi 30 bar/3 MPa/435.11 psi	≤ (0.2 • r) % per 70 bar (zero-point correction is possible with position error compensation)	
• On the measuring span		
250 mbar/25 kPa/3.63 psi 600 mbar/60 kPa/8.70 psi 1600 mbar/160 kPa/23.21 psi 5 bar/500 kPa/72.52 psi 30 bar/3 MPa/435.11 psi	≤ 0.14 % per 70 bar	
Long-term stability at ±30 °C (±54 °F)	Static pressure max. 70 bar/7 MPa/1015 psi	
• 250 mbar/25 kPa/3.63 psi 600 mbar/60 kPa/8.70 psi 1600 mbar/160 kPa/23.21 psi 5 bar/500 kPa/72.52 psi	In 5 years ≤ (0.125 • r) %	
• 30 bar/3 MPa/435.11 psi	In 5 years ≤ (0.25 • r) %	
Step response time T_{63} without electrical damping		
• 250 mbar/25 kPa/3.63 psi 600 mbar/60 kPa/8.70 psi 1600 mbar/160 kPa/23.21 psi 5 bar/500 kPa/72.52 psi 30 bar/3 MPa/435.11 psi	Approx. 0.2 s	
Effect of mounting position	In pressure per change of angle ≤ 0.7 mbar/0.07 kPa/0.001015 psi per 10° incline (zero-point correction is possible with position error compensation)	

Differential pressure and flow rate measuring accuracy	
Effect of auxiliary power supply	In percent per change in voltage 0.005 % per 1 V
Measured value resolution for PROFIBUS PA or FOUNDATION Fieldbus	$3 \cdot 10^{-5}$ of the nominal measuring range

13.7 Operating conditions

Rated conditions for gauge pressure and absolute pressure (from the gauge pressure series)		
Installation conditions		
Ambient conditions		
• Ambient temperature		
Note	Observe the temperature class in hazardous areas.	
Measuring cell with silicone oil filling	-40 … +100 °C (-40 … +212 °F)	
Measuring cell with inert liquid	-20 … +85 °C (-4 … +185 °F)	
Measuring cell with inert filling liquid for gauge pressure measuring cells 1, 4, 16 and 63 bar	-40 ... +85°C (-40...+185°F)	
Display	-30 … +85 °C (-22 … +185 °F)	
Storage temperature	-50 … +85 °C (-58 … +185 °F)	
• Climate class		
Condensation	Permitted	
• Degree of protection in accordance with EN 60529	IP66, IP68	
• Degree of protection in accordance with NEMA 250	NEMA 4X	
• Electromagnetic compatibility		
Interference emission and interference immunity	In accordance with EN 61326 and NAMUR NE 21	
Process medium conditions		
• Process temperature		
Cell	*Pressure*	*Temperature range*
Measuring cell with silicone oil filling		-40 … +100 °C (-40 … +212 °F)

Rated conditions for gauge pressure and absolute pressure (from the gauge pressure series)		
Measuring cell with inert liquid	1 bar/100 kPa/3.6 psi	-40 … +100 °C (-40 … +212 °F)
	4 bar/400 kPa/58 psi	-40 … +100 °C (-40 … +212 °F)
	16 bar/1.6 MPa/232 psi	-40 … +100 °C (-40 … +212 °F)
	63 bar/6.3 MPa/914 psi	-40 … +100 °C (-40 … +212 °F)
	160 bar/16 MPa/2321 psi	-20 … +100 °C (-4 … +212 °F)
	400 bar/40 MPa/5802 psi	-20 … +100 °C (-4 … +212 °F)
	700 bar/70 MPa/10152 psi	-20 … +100 °C (-4 … +212 °F)
With extension to Zone 0		-20 … +60 °C (-4 … +140 °F)

Conditions of use for gauge pressure and absolute pressure with flush-mounted diaphragm		
Installation conditions		
Ambient temperature		
Note	Observe the temperature class in hazardous areas.	
• Measuring cell with silicone oil filling	-40 … +85 °C (-40 … +185 °F)	
• Measuring cell with inert liquid (various pressure classes)	1 bar/100 kPa/3.6 psi	-40 … +100 °C (-40 … +212 °F)
	4 bar/400 kPa/58 psi	-40 … +100 °C (-40 … +212 °F)
	16 bar/1.6 MPa/232 psi	-40 … +100 °C (-40 … +212 °F)
	63 bar/6.3 MPa/914 psi	-40 … +100 °C (-40 … +212 °F)
	160 bar/16 MPa/2321 psi	-20 … +100 °C (-4 … +212 °F)
	400 bar/40 MPa/5802 psi	-20 … +100 °C (-4 … +212 °F)
	700 bar/70 MPa/10152 psi	-20 … +100 °C (-4 … +212 °F)
• Measuring cell with Neobee (FDA-compliant)	-10 … +85 °C (14 … 185 °F)	
• Display	-30 … +85 °C (-22 … +185 °F)	
• Storage temperature	-50 … +85 °C (-58 … +185 °F) (with Neobee: -20 ... + 85 °C (-4 ... +185 °F)) (with high-temperature oil: -10 ... + 85 °C (14 ... 185 °F))	
Climate class		
Condensation	Permitted	
• Degree of protection in accordance with EN 60 529	IP66, IP68	
• Degree of protection in accordance with NEMA 250	NEMA 4X	
Electromagnetic compatibility		

Conditions of use for gauge pressure and absolute pressure with flush-mounted diaphragm	
• Interference emission and interference immunity	In accordance with EN 61326 and NAMUR NE 21
Process medium conditions	
Process temperature[1)]	
• Measuring cell with silicone oil filling	-40 … +150°C (-40 … +302 °F) -40 … +200°C (-40 … +392 °F) with cooling extension
• Measuring cell with inert liquid	-20 … +100 °C (-4 … +212 °F) -20 … +200°C (-4 … +392 °F) with cooling extension
• Measuring cell with Neobee (FDA-compliant)	-10 … +150°C (14 … 302 °F) -10 … +200°C (14 … 392 °F) with cooling extension
• Measuring cell with high-temperature oil filling	-10 ... +250 °C (14 ... 482 °F) with cooling extension

1) Observe the temperature limits in the process connection standards (e.g. DIN 32676 and DIN 11851) for the maximum process temperature for flush-mounted process connections.

Conditions of use for pressure transmitter with PMC connection	
Installation conditions	
Ambient temperature	
Note	Observe the temperature class in hazardous areas.
• Measuring cell with silicone oil filling	-40 … +85 °C (-40 … +185 °F)
• Display	-30 … +85 °C (-22 … +185 °F)
• Storage temperature	-50 … +85 °C (-58 … +185 °F)
Climate class	
Condensation	Permitted
• Degree of protection in accordance with EN 60529	IP66, IP68
• Degree of protection in accordance with NEMA 250	NEMA 4X
Electromagnetic compatibility	
• Interference emission and interference immunity	In accordance with EN 61326 and NAMUR NE 21
Process medium conditions	
• Process temperature	-40 … +100 °C (-40 … +212 °F)

Rated conditions for absolute pressure (from the differential pressure series), differential pressure and flow rate	
Installation conditions	
• Installation instruction	any
Ambient conditions	
• Ambient temperature	
Note	Observe the temperature class in hazardous areas.
Measuring cell with silicone oil filling	-40 … +85 °C (-40 … +185 °F)
• Measuring cell 30 bar (435 psi)	• -20 … +85 °C (-4 … +185 °F) • For flow: -20 … +85 °C (-4 … +185 °F)
Measuring cell with inert liquid	-20 … +85 °C (-4 … +185 °F)
Display	-30 … +85 °C (-22 … +185 °F)
Storage temperature	-50 … +85 °C (-58 … +185 °F)
• Climate class	
Condensation	Permitted
• Degree of protection in accordance with EN 60529	IP66, IP68
• Degree of protection in accordance with NEMA 250	NEMA 4X
• Electromagnetic compatibility	
Interference emission and interference immunity	In accordance with EN 61326 and NAMUR NE 21
Process medium conditions	
• Process temperature	
Measuring cell with silicone oil filling	-40 … +100 °C (-40 … +212 °F)
• Measuring cell 30 bar (435 psi)	-20 … +85 °C (-4 … +185 °F)
Measuring cell with inert liquid	-20 … +100 °C (-4 … +212 °F)
• Measuring cell 30 bar (435 psi)	-20 … +85 °C (-4 … +185 °F)
In conjunction with dust explosion protection	-20 … +60°C (-4 … +140°F)

Rated conditions for level	
Installation conditions	
• Installation instruction	specified through the flange
Ambient conditions	
• Ambient temperature	

Rated conditions for level	
Note	Observe the allocation of the max. permissible operating temperature to the max. permissible operating pressure of the relevant flange connection.
Measuring cell with silicone oil filling	-40 … +85 °C (-40 … +185 °F)
Display	-30 … +85 °C (-22 … +185 °F)
Storage temperature	-50 … +85 °C (-58 … +185 °F)
• Climate class	
Condensation	Permitted
• Degree of protection in accordance with EN 60529	IP66
• Degree of protection in accordance with NEMA 250	NEMA 4X
• Electromagnetic compatibility	
Interference emission and interference immunity	In accordance with EN 61326 and NAMUR NE 21
Process medium conditions	
• Process temperature	
Measuring cell with silicone oil filling	• Plus side: See mounting flange • Low-pressure side: -40 … +100 °C (-40 … +212 °F)

13.8 Construction

Construction for gauge pressure and absolute pressure (from the gauge pressure series)	
Weight	Approx. 1.5 kg (3.3 lb) for aluminum enclosure
Material	
• Wetted parts materials	
Process connection	Stainless steel, mat. no. 1.4404/316L or Hastelloy C4, mat. no. 2.4610
Oval flange	Stainless steel, mat. no. 1.4404/316L
Seal diaphragm	Stainless steel, material no. 1.4404/316L or Hastelloy C276, material no. 2.4819
• Non-wetted parts materials	
Electronics housing	• Copper-free die cast aluminum GD-AlSi 12 or stainless steel precision casting, mat. no. 1.4408 • Standard: Powder coating with polyurethane Option: 2 coats: Coat 1: epoxy-based; coat 2: polyurethane • Stainless steel nameplate
Mounting bracket	Steel or stainless steel

Construction for gauge pressure and absolute pressure (from the gauge pressure series)	
Measuring cell filling	• Silicone oil • Neobee M20 • Inert liquid (max. 120 bar g (2320 psi g) for oxygen measurement)
Process connection	G$^1/_2$B connection pin in accordance with DIN EN 837-1; female thread $^1/_2$-14 NPT or oval flange (PN 160 (MAWP 2320 psi g)) with M10 fastening screw thread in accordance with DIN 19213 or $^7/_{16}$-20 UNF in accordance with EN 61518. Male thread M20 x 1.5 and $^1/_2$-14 NPT
Electrical connection	Cable inlet using the following cable glands: • Pg 13.5 • M20 x 1.5 and ½-14 NPT or Han 7D/Han 8D connector[1)] – Cable diameter: 6 to 12 mm; types of protection "nA" and "ic" (Zone 2): 8 to 12 mm or a suitable cable gland for smaller diameters • M12 connector
Degree of protection for Han and M12 connectors	IP65

[1)] Han 8D is identical to Han 8U.

Construction for gauge pressure, with flush mounted diaphragm	
Weight	Approx 1.5 … 13.5 kg (3.3 … 30 lb) with aluminum enclosure
Material	
• Wetted parts materials	
Process connection	Stainless steel, mat. no. 1.4404/316L
Seal diaphragm	Stainless steel, mat. no. 1.4404/316L
• Non-wetted parts materials	
Electronics housing	• Non-copper aluminum die casting GD-AlSi 12 or stainless steel precision casting, mat. no. 1.4408 • Standard: Powder coating with polyurethane Option: 2 coats: Coat 1: epoxy-based; coat 2: polyurethane • Stainless steel nameplate
Mounting bracket	Steel or stainless steel
Measuring cell filling	• Silicone oil • Neobee M20 • Inert liquid
Process connection	• Flanges as per EN and ASME • F&B and Pharma flange, clamp and threaded connectors • NEUMO BioConnect/BioControl • PMC connections for the paper industry

Construction for gauge pressure, with flush mounted diaphragm	
Electrical connection	Cable inlet using the following cable glands: • Pg 13.5 • M20x1.5 • ½-14 NPT • Han 7D/Han 8D plug[1)] • M12 connector
Degree of protection for Han and M12 connectors	IP65

1) Han 8D is identical to Han 8U.

Construction of pressure transmitter with PMC connection	
Weight	Approx. 1.5 kg (3.3 lb) for aluminum enclosure
Material	
• Wetted parts materials	
Gasket (standard)	PTFE flat gasket
O-ring (minibolt)	• FPM (Viton) • FFPM or NBR (optional)
Seal diaphragm	Hastelloy C276, mat. No. 2.4819
• Non-wetted parts materials	
Electronics housing	• Non-copper aluminum die casting GD-AlSi 12 or stainless steel precision casting, mat. no. 1.4408 • Standard: Powder coating with polyurethane Option: 2 coats: Coat 1: epoxy-based; coat 2: polyurethane • Stainless steel nameplate
Mounting bracket	Steel or stainless steel
Measuring cell filling	• Silicone oil • Inert liquid
Process connection	
• Standard	• Flush mounted • 1 1/2" • PMC Standard design
• Minibolt	• Flush mounted • 1" • PMC Minibolt design

Construction of pressure transmitter with PMC connection	
Electrical connection	Cable inlet using the following cable glands: • Pg 13.5 • M20 x 1.5 • ½-14 NPT • Han 7D/Han 8D plug[1)] • M12 connector
Degree of protection for Han and M12 connectors	IP65

[1)] Han 8D is identical to Han 8U.

Design for absolute pressure (from the differential pressure series), differential pressure and flow rate	
Weight	Approx. 4.5 kg (9.9 lb) for aluminum enclosure
Material	
• Wetted parts materials	
Seal diaphragm	Stainless steel, mat. no. 1.4404/316L, Hastelloy C276, mat. no. 2.4819, Monel, mat. no. 2.4360, tantalum or gold
Pressure caps and locking screw	Stainless steel, mat. no. 1.4408 to PN 160, mat. no. 1.4571/316Ti for PN 420, Hastelloy C4, 2.4610 or Monel, mat. no. 2.4360
O-ring	FPM (Viton) or optionally: PTFE, FEP, FEPM and NBR
• Non-wetted parts materials	
Electronics housing	• Non-copper aluminum die casting GD-AlSi 12 or stainless steel precision casting, mat. no. 1.4408 • Standard: Powder coating with polyurethane Option: 2 coats: Coat 1: epoxy-based; coat 2: polyurethane • Stainless steel nameplate
Pressure cap screws	Stainless steel
Mounting bracket	Steel or stainless steel
Measuring cell filling	• Silicone oil • Neobee M20 • Inert liquid (max. 120 bar g (2320 psi g) for oxygen measurement)
Process connection	1/4-18 NPT female thread and flat connection with 7/16-20 UNF fastening screw thread in accordance with EN 61518 or M10 fastening screw thread in accordance with DIN 19213 (M12 for PN 420 (MAWP 6092 psi))

Design for absolute pressure (from the differential pressure series), differential pressure and flow rate	
Electrical connection	Screw terminals Cable inlet using the following cable glands: • Pg 13.5 • M20 x 1.5 • ½-14 NPT or Han 7D/Han 8D connector[1)] • M12 connector
Degree of protection for Han and M12 connectors	IP65

1) Han 8D is identical to Han 8U.

Construction for level	
Weight	
• as per EN (pressure transmitter with mounting flange, without tube)	approx 11 … 13 kg (24.2 … 28.7 lb)
• as per ASME (pressure transmitter with mounting flange, without tube)	approx 11 … 18 kg (24.2 … 39.7 lb)
Material	
• Wetted parts materials	
Plus side	
• Seal diaphragm on the mounting flange	Stainless steel, mat. no. 1.4404/316L, Monel 400, mat. no. 2.4360, Hastelloy B2, mat. no. 2.4617, Hastelloy C276, mat. no. 2.4819, Hastelloy C4, mat. no. 2.4610, tantalum, PTFE, ECTFE
• Sealing surface	smooth as per EN 1092-1, form B1 or ASME B16.5 RF 125 … 250 AA for stainless steel 316L, EN 2092-1 form B2 or ASME B16.5 RFSF for the remaining materials
Sealing material in the pressure caps	
• for standard applications	Viton
• for underpressure applications on the mounting flange	Copper
Minus side	
• Seal diaphragm	Stainless steel, mat. no. 1.4404/316L
• Pressure caps and locking screws	Stainless steel, mat. no. 1.4408
• O-ring	FPM (Viton)
• Non-wetted parts materials	

Construction for level	
Electronics housing	• Non-copper aluminum die casting GD-AlSi 12 or stainless steel precision casting, mat. no. 1.4408 • Standard: Powder coating with polyurethane Option: 2 coats: Coat 1: epoxy-based; coat 2: polyurethane • Stainless steel nameplate
Pressure cap screws	Stainless steel
Measuring cell filling	Silicone oil
• Mounting flange fill fluid	Silicon oil or a different design
Process connection	
• Plus side	Flange as per EN and ASME
• Minus side	$^{1}/_{4}$-18 NPT female thread and flat connection with M10 fastening screw thread in accordance with DIN 19213 (M12 for PN 420 (MAWP 6092 psi)) or $^{7}/_{16}$-20 UNF in accordance with EN 61518
Electrical connection	Screw terminals Cable inlet using the following cable glands: • Pg 13.5 • M20 x 1.5 • ½-14 NPT or Han 7D/Han 8D connector[1)] • M12 connector
Degree of protection for Han and M12 connectors	IP65

[1)] Han 8D is identical to Han 8U.

Torques	
Cable glands/blanking plugs	
• Screw-in torque for plastic gland in all enclosures	4 Nm (3 ft lb)
• Screw-in torque for metal/stainless steel glands in aluminum/stainless steel enclosure	6 Nm (4.4 ft lb)
• Screw-in torque for NPT adapter made of metal/stainless steel in aluminum/stainless steel enclosure	15 Nm (11.1 ft lb)
• Screw-in torque for NPT gland in the NPT adapter NOTE: To avoid damage to the device, the NPT adapter must be held in place while the NPT gland is screwed into the NPT adapter.	68 Nm (50 ft lb)
• Tightening torque for union nut made of plastic	2.5 Nm (1.8 ft lb)

Torques	
• Tightening torque for union nut made of metal/stainless steel	4 Nm (3 ft lb)

13.9 Display, keyboard and auxiliary power

Display and user interface	
Keys	3 for on-site programming directly at the device
Display	• With or without integrated display (optional) • Cover with inspection window (optional)

Auxiliary power U_H		
	HART	**PROFIBUS PA or Foundation Fieldbus**
Terminal voltage on pressure transmitter	• DC 10.5 V … 45 V • In the case of intrinsically safe operation 10.5 V … 30 V DC	–
Ripple	U_{SS} ≤ 0.2 V (47 … 125 Hz)	–
Noise	U_{eff} ≤ 1.2 mV (0.5 … 10 kHz)	–
Auxiliary power	–	Bus-powered
Separate supply voltage	–	Not necessary
Bus voltage		
• Not	–	9 … 32 V
• For intrinsically safe operation	–	9 … 24 V
Current consumption		
• Max. basic current	–	12.5 mA
• Starting current ≤ basic current	–	Yes
• Max. current in event of fault	–	15.5 mA
Error shut-down electronics (FDE) present	–	Yes

13.10 Certificates and approvals

Certificates and approvals		
	HART	**PROFIBUS PA and FOUNDATION Fieldbus**
Classification according to Pressure Equipment Directive (PED 97/23/EC)	• for gases of Fluid Group 1 and liquids of Fluid Group 1; meets requirements of Article 3 Para. 3 (good engineering practice) • only for flow rate: for gases of Fluid Group 1 and liquids of Fluid Group 1; fulfills the basic safety requirements as per article 3, Para 1 (appendix 1); classified as category III, module H conformity evaluation by TÜV Nord	
Drinking water	In preparation	
Explosion protection		
• Intrinsic safety "i"		
Designation	⟨Ex⟩ II 1/2 G Ex ia/ib IIC T4/T5/T6 Ga/Gb	
Permissible ambient temperature	-40 … +85 °C (-40 … +185 °F) temperature class T4 -40 … +70 °C (-40 … +158 °F) temperature class T5 -40 … +60 °C (-40 … +140 °F) temperature class T6	
Connection	To a certified intrinsically safe circuit with the max. values: U_i = 30 V, I_i = 100 mA, P_i = 750 mW, R_i = 300 Ω	FISCO supply unit U_0 = 17.5 V, I_0 = 380 mA, P_0 = 5.32 W Linear barrier U_0 = 24 V, I_0 = 174 mA, P_0 = 1 W
Effective inner capacitance	C_i = 6 nF	C_i = 1.1 nF
Effective inner inductance	L_i = 0.4 mH	L_i = 7 µH
• Flameproof enclosure encapsulation "d"		
Designation	⟨Ex⟩ II 1/2 G Ex d IIC T4, T6 Ga/Gb	
Permissible ambient temperature	-40 … +85 °C (-40 … +185 °F) temperature class T4 -40 … +60 °C (-40 … +140 °F) temperature class T6	
Connection	To a circuit with the operating values: U_H = 10.5 … 45 V DC	To a circuit with the operating values: U_H = 9 … 32 V DC
• Dust explosion protection for Zone 20 and 20/21		
Designation	⟨Ex⟩ II 1 D Ex ta IIIC IP65 T120°C Da, ⟨Ex⟩ II 1/2 D Ex ta/tb IIIC IP65 T120°C Da/Db	
Permissible ambient temperature	-40 ... +85 °C (-40 ... +185 °F)	
max. surface temperature	120°C (248°F)	
Connection	To a certified intrinsically safe circuit with the max. values: U_i = 30 V, I_i = 100 mA, P_i = 750 mW, R_i = 300 Ω	FISCO supply unit U_0 = 17.5 V, I_0 = 380 mA, P_0 = 5.32 W Linear barrier U_0 = 24 V, I_0 = 250 mA, P_0 = 1.2 W
Effective inner capacitance	C_i = 6 nF	C_i = 1.1 nF
Effective inner inductance	L_i = 0.4 mH	L_i = 7 µH

Certificates and approvals			
		HART	**PROFIBUS PA and FOUNDATION Fieldbus**
•	Dust explosion protection for Zone 22		
	Designation	⟨Ex⟩ II 2 D Ex tb IIIC IP65 T120°C Db	
	Connection	To a circuit with the operating values: U_H = 10.5 … 45 V DC; P_{max} = 1.2 W	To a circuit with the operating values: U_H = DC 9 … 32 V; P_{max} = 1.2 W
•	Type of protection "n" (Zone 2)		
	Designation	⟨Ex⟩ II 2/3 G Ex nA II T4/T5/T6 Gc ⟨Ex⟩ II 2/3 G Ex ic IIC T4/T5/T6 Gc	
	Connection "nA"	U_n = 45 V	U_m = 32 V
	Connection "ic"	To a circuit with the operating values: U_i = 45 V	FISCO supply unit U_O =17.5 V, I_O = 570 mA Linear barrier U_0 = 32 V, I_0 = 132 mA, P_0 = 1 W
	Effective inner capacitance	C_i = 6 nF	C_i = 1.1 nF
	Effective inner inductance	L_i = 0.4 mH	L_i = 7 µH
•	Explosion protection in accordance with FM	Certificate of Compliance 3008490	
	Designation (XP/DIP) or IS; NI; S	CL I, DIV 1, GP ABCD T4 ... T6; CL II, DIV 1, GP EFG; CL III; CL I, ZN 0/1 AEx ia IIC T4 ... T6; CL I, DIV 2, GP ABCD T4 ... T6; CL II, DIV 2, GP FG; CL III	
	Permissible ambient temperature	T_a = T4: -40 ... +85 °C (-40 ... +185 °F) T_a = T5: -40 ... +70 °C (-40 ... +158 °F) T_a = T6: -40 ... +60 °C (-40 ... +140 °F)	
	Entity parameters	As per "control drawing" A5E00072770A: U_i = 30 V, I_i = 100 mA, P_i = 750 mW, R_i = 300 Ω, C_i = 6 nF, L_i = 0.4 mH	As per "control drawing" A5E00072770A: U_{max} = 17.5 V, I_{max} = 380 mA, P_{max} = 5.32 W, C_{max} = 6 nF, L_{max} = 0.4 mH
•	Explosion protection as per CSA	Certificate of Compliance 1153651	
	Designation (XP/DIP) or (IS)	CL I, DIV 1, GP ABCD T4 ... T6; CL II, DIV 1, GP EFG; CL III; Ex ia IIC T4 ... T6: CL I, DIV 2, GP ABCD T4 ... T6; CL II, DIV 2, GP FG; CL III	
	Permissible ambient temperature	T_a = T4: -40 ... +85 °C (-40 ... +185 °F) T_a = T5: -40 ... +70 °C (-40 ... +158 °F) T_a = T6: -40 ... +60 °C (-40 ... +140 °F)	
	Entity parameters	As per "control drawing" A5E00072770A: U_i = 30 V, I_i = 100 mA, P_i = 750 mW, R_i = 300 Ω, L_i = 0.4 mH, C_i = 6 nF	

13.11 PROFIBUS communication

PROFIBUS PA communication	
Simultaneous communication with master Class 2	Max. 4
Setting of address possible using	• Configuration tool • Local operation (standard setting is address 126)
Cyclic user data	
• Output byte	• One measured value: 5 bytes • Two measured values: 10 bytes
• Input byte	• Totalizer mode: 0, 1 or 2 bytes • Reset function because of injection: 1 byte (totalizer mode and reset function because of injection)
Internal preprocessing	
Device profile	PROFIBUS PA Profile for Process Control Devices Version 3.0, Class B
Function blocks	2
• Analog input	
Adaptation to user-specific process variable	Yes, linearly rising or falling characteristic
Adjustable electrical damping	0 ... 100 s
Simulation function	Output/input
Failure response	Can be parameterized: • Last good value • Substitute value • Faulty value
Limit monitoring	Upper and lower warning and alarm limits
• Totalizer	• Can be reset and preset • Selectable counting direction • Simulation function of totalizer output
Failure response	Can be parameterized: • Addition with last good value • Stop addition • Addition with faulty value
Limit monitoring	Upper and lower warning and alarm limits
• Physical block	1
Transducer blocks	2
• Transducer block "Pressure"	
Calibration by applying two pressures	Yes

PROFIBUS PA communication	
Monitoring of sensor limits	Yes
Input of a container characteristic	With max. 30 interpolation points
Characteristic curve	• Linear • Square-root Not for gauge and absolute pressures
Low-flow cut-off and starting point of square-rooting Not for gauge and absolute pressures	Parameterizable
Simulation function	
• Pressure measurement	• Constant value • Parameterizable ramp function
• Sensor temperature	• Constant value • Parameterizable ramp function
• Transducer block "Electronics temperature"	
Simulation function	
• Pressure measurement	• Constant value • Parameterizable ramp function
• Electronics temperature	• Constant value • Parameterizable ramp function

Dimension drawings

14

14.1 SITRANS P, DS III/P410 for gauge pressure and absolute pressure from the gauge pressure series

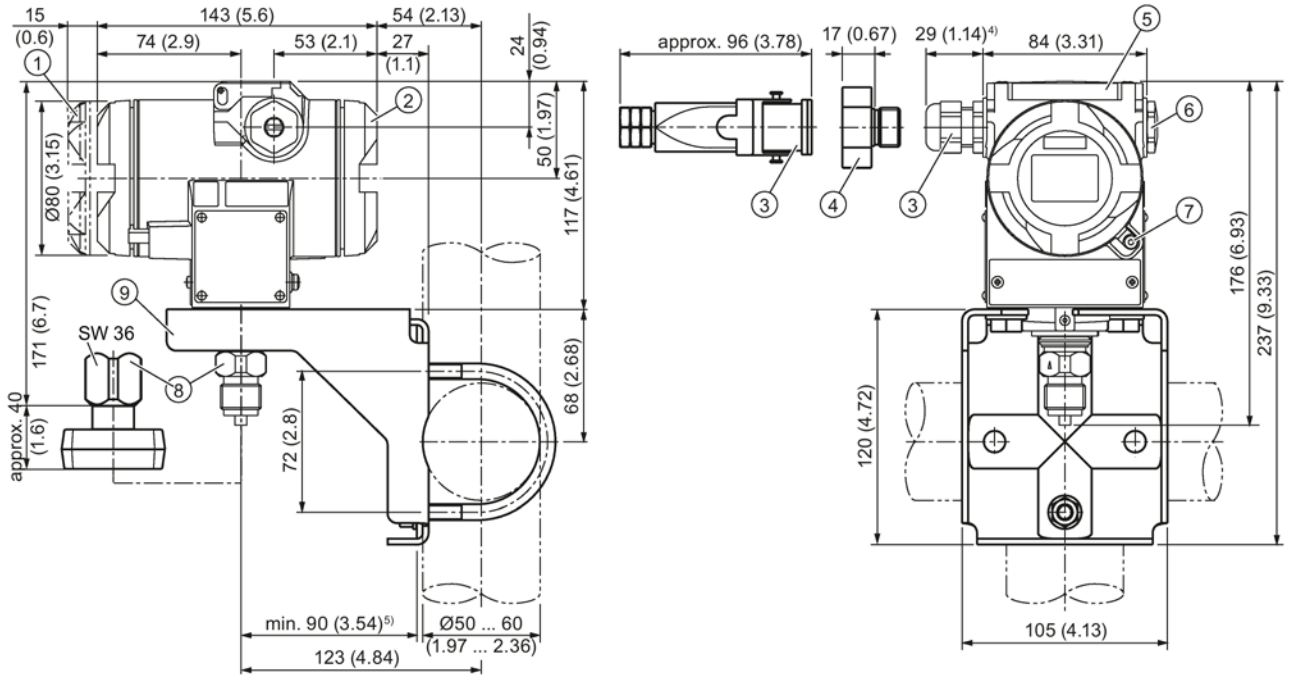

① Electronics side, display
(longer for cover with inspection window)[1)]

② Connection side[1)]

③ Electrical connection:

- Pg 13.5 gland (adapter)[2)3)]
- M20 x 1.5 gland[3)]
- ½-14 NPT gland
- Han 7D/Han 8D plug[2) 3)]

④ Harting adapter

⑤ Protective cap of the operating buttons

⑥ Blanking plug

⑦ Safety catch
(only for flameproof encapsulation, not shown in the drawing)

⑧ Process connection: G½B connection pin or oval flange

⑨ Mounting bracket (optional)

1) Take an additional 20 mm (0.79 inches) thread length into account

2) Not with "flameproof enclosure" type of protection

3) Not for "FM + CSA [is + XP]" type of protection

4) For Pg 13.5 with adapter, approx 45 mm (1.77 inches)

5) Minimum distance for rotating

6) SITRANS P410 is only available as gauge pressure and differential pressure version.

Image 14-1 Pressure transmitter SITRANS P DS III/P410 for absolute pressure, from the gauge pressure series, dimensions in mm (inches)

14.2 SITRANS P DS III/P410 for differential pressure, flow rate and absolute pressure from the differential pressure series

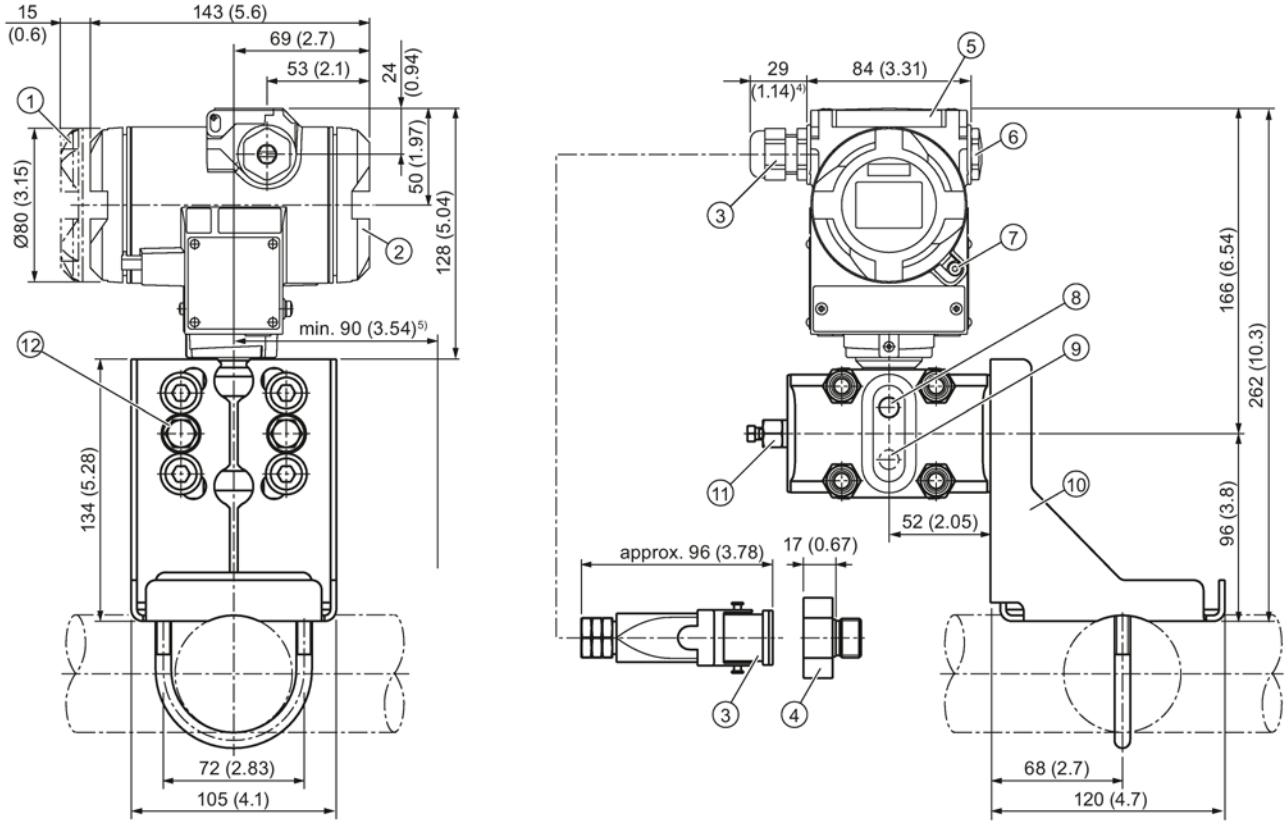

① Electronics side, display
(longer for cover with inspection window)[1)]

② Connection side[1)]

③ Electrical connection:

- Pg 13.5 gland (adapter)[2)3)]
- M20 x 1.5 gland
- ½-14 NPT gland
- Han 7D/Han 8D plug[2)3]

④ Harting adapter

⑤ Protective cap of the operating buttons

⑥ Blanking plug

⑦ Safety catch
(only for "flameproof enclosure" type of protection, not shown in the drawing)

⑧ Lateral ventilation for liquid measurement (standard)

⑨ Lateral ventilation for gas measurement (addition H02)

⑩ Mounting bracket (optional)

⑪ Sealing plug, with valve (optional)

⑫ Process connection: $^1/_4$-18 NPT (EN 61518)

1) Take an additional 20 mm (0.79 inches) thread length into account
2) Not with "flameproof enclosure" type of protection
3) Not for "FM + CSA [IS + XP]" type of protection
4) For Pg 13.5 with adapter, approx 45 mm (1.77 inches)
5) 92 mm (3.62 inch) minimum distance for rotating the pointer
6) SITRANS P410 is only available as gauge pressure and differential pressure version.

Image 14-2 Pressure transmitter SITRANS P DS III/P410 for differential pressure and flow rate, dimensions in mm (inches)

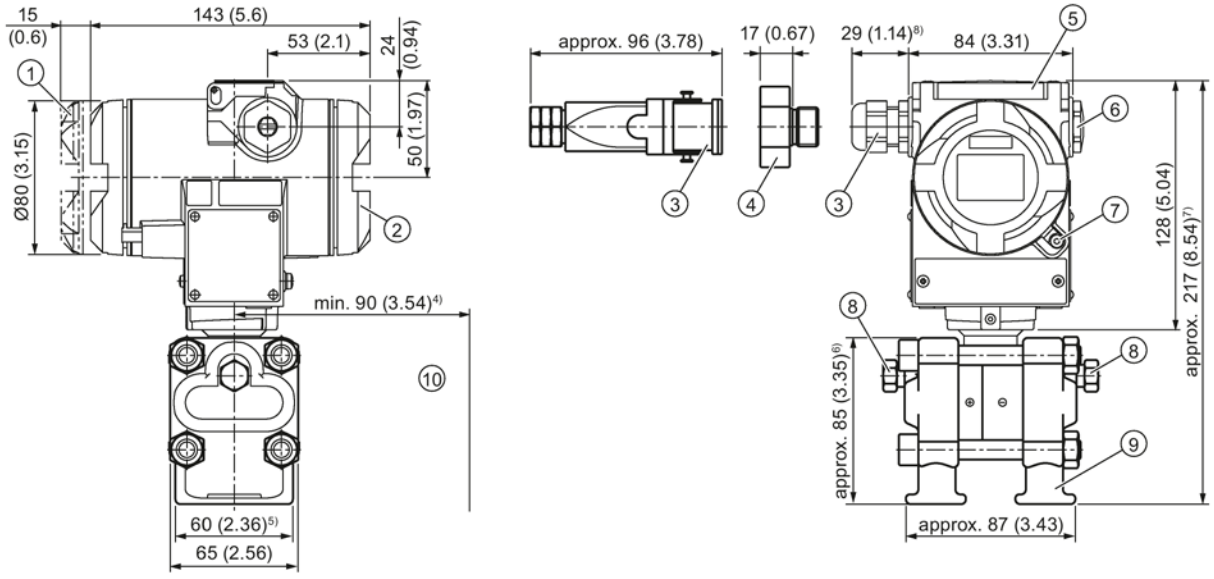

① Electronics side, display
(longer for cover with inspection window)[1)]

② Connection end

③ Electrical connection:

- Pg 13.5 gland (adapter)[2)3)]
- M20 x 1.5 gland
- ½-14 NPT gland
- Han 7D/Han 8D plug[2)3]

④ Harting adapter

⑤ Protective cap of the operating buttons

⑥ Blanking plug

⑦ Safety catch
(only for "flameproof enclosure" type of protection, not shown in the drawing)

⑧ Sealing plug, with valve (optional)

⑨ Process connection: ¼-18 NPT (IEC 61518)

⑩ Clearance for rotating the enclosure

1) Take an additional 20 mm (0.79 inches) thread length into account

2) Not with "flameproof enclosure" type of protection

3) Not for "FM + CSA [is + XP]" type of protection

4) 92 mm (3.6 inch) minimum distance for rotating the pointer

5) 74 mm (2.9 inch) for PN ≥ 420 (MAWP ≥ 6092 psi)

6) 91 mm (3.6 inch) for PN ≥ 420 (MAWP ≥ 6092 psi)

7) 219 mm (8.62 inch) for PN ≥ 420 (MAWP ≥ 6092 psi)

8) For Pg 13.5 with adapter approx. 45 mm (1.77 inches)

9) SITRANS P410 is only available as gauge pressure and differential pressure version.

Image 14-3 Pressure transmitter SITRANS P DS III/P410 for differential pressure and flow rate with caps for vertical differential pressure lines, dimensions in mm (inches)

14.3 SITRANS P DS III/P410 for level

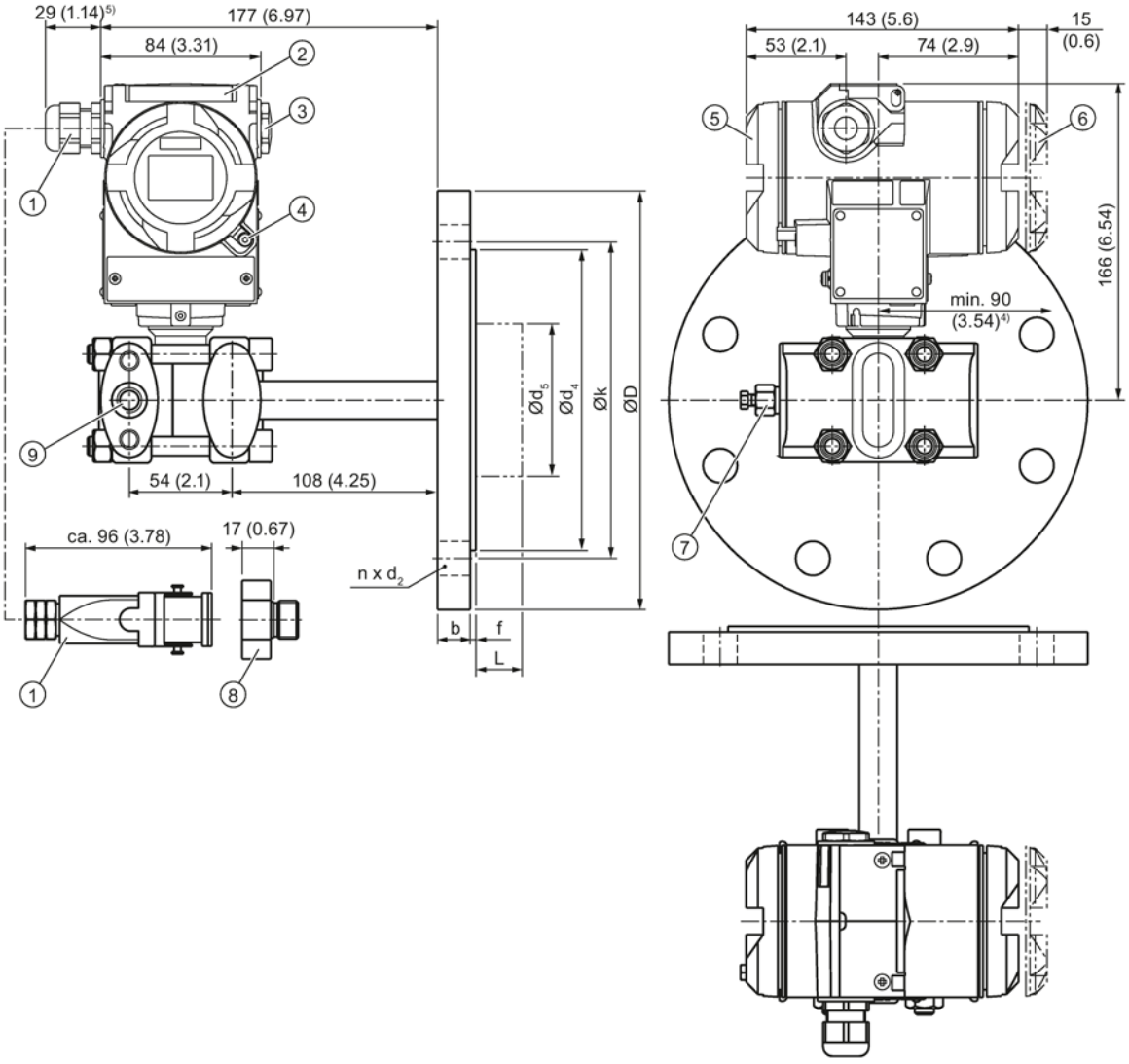

① Electrical connection:
- Pg 13.5 gland (adapter)[2)3)]
- M20 x 1.5 gland
- ½-14 NPT gland
- Han 7D/Han 8D plug[2) 3)]

② Protective cap of the operating buttons

③ Blanking plug

④ Safety catch
(only for "flameproof enclosure" type of protection, not shown in the drawing)

⑤ Connection side[1)]

⑥ Electronics side, display
(longer for cover with inspection window)[1)]

⑦ Locking screw with valve (option)
⑧ Harting adapter
⑨ Process connection: Minus side ¼-18 NPT (IEC 61518)
1) Take an additional 20 mm (0.79 inches) thread length into account
2) Not with "flameproof enclosure" type of protection
3) Not for "FM + CSA [is + XP]" type of protection
4) 92 mm (3.62 inches) minimum distance for rotating the enclosure with pointer
5) For Pg 13.5 with adapter, approx 45 mm (1.77 inches)
6) SITRANS P410 is only available as gauge pressure and differential pressure version.

Image 14-4 Pressure transmitter SITRANS P DS III/P410 for level, including mounting flange, dimensions in mm (inches)

14.4 SITRANS P DS III (flush-mounted)

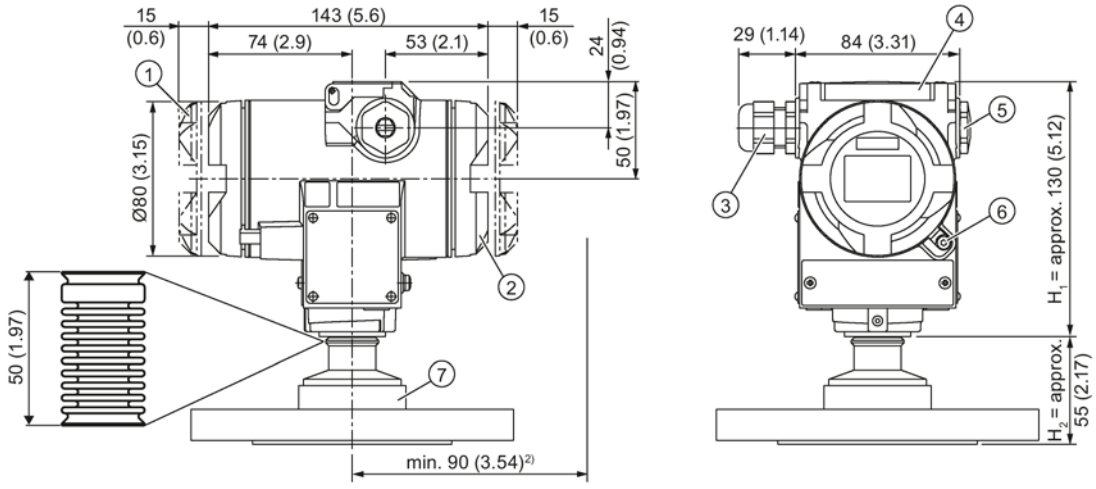

① Electronics side, display
(longer for cover with inspection window)1)
② Connection side1)
③ Electrical connection:
- M20 x 1.5 gland
- ½-14 NPT gland
- M12 connector

④ Protective cap of the operating buttons
⑤ Blanking plug
⑥ Safety catch
(only for "flameproof enclosure" type of protection, not shown in the drawing)
⑦ Process connection: see Flange table
1) In addition, allow approx. 20 mm (0.79 inch) for the thread length
2) 92 mm (3.6 inches) minimum distance for rotating the enclosure with display
3) SITRANS P410 is only available as gauge pressure and differential pressure version.

Image 14-5 SITRANS P DS III/P410 (flush mounted)

14.4.1 Note 3A and EHDG

Note

Approvals

The references to the approvals for "EHEDG" and "3A" refer to the respective process connections and are not device-specific. Please refer to the technical specifications of the respective pressure transmitter to see whether the desired certificate is available for your device/flange combination.

14.4.2 Connections as per EN and ASME

Flange as per EN

EN 1092-1

	DN	PN	⌀D	H_2
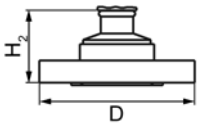	25	40	115 mm (4.5")	Approx. 52 mm (2")
	25	100	140 mm (5.5")	
	40	40	150 mm (5.9")	
	40	100	170 mm (6.7")	
	50	16	165 mm (6.5")	
	50	40	165 mm (6.5")	
	80	16	200 mm (7.9")	
	80	40	200 mm (7.9")	

Threaded connections

G3/4", G1" and G2" In accordance with DIN 3852

	DN	PN	⌀D	H_2
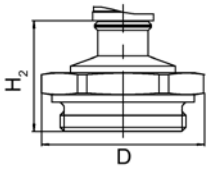	¾"	63	37 mm (1.5")	Approx. 45 mm (1.8")
	1"	63	48 mm (1.9")	Approx. 47 mm (1.9")
	2"	63	78 mm (3.1")	Approx. 52 mm (2")

Flanges as per ASME

ASME B 16.5

	DN	CLASS	⌀D	H_2
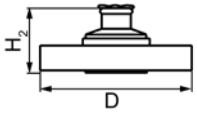	1"	150	110 mm (4.3")	Approx. 52 mm (2")
	1"	300	125 mm (4.9")	
	1½"	150	130 mm (5.1")	
	1½"	300	155 mm (6.1")	
	2"	150	150 mm (5.9")	
	2"	300	165 mm (6.5")	
	3"	150	190 mm (7.5")	
	3"	300	210 mm (8.1")	
	4"	150	230 mm (9.1")	
	4"	300	255 mm (10.0")	

14.4.3 F&B and pharma flange

Connections as per DIN

DIN 11851

	DN	PN	⌀D	H_2
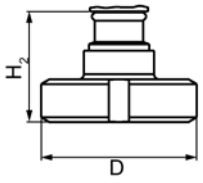	50	25	92 mm (3.6")	Approx. 52 mm (2")
	80	25	127 mm (5.0")	

DIN 11864-1 Form A - sterile threaded sockets

	DN	PN	⌀D	H_2
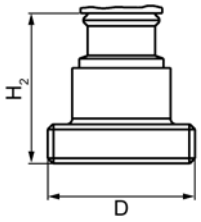	25	40	52 mm (2")	Approx. 52 mm (2")
	40	40	65 mm (2.6")	
	50	40	78 mm (3.1")	
	100	40	130 mm (5.1")	

Approvals	EHEDG

DIN 11864-2 Form A - sterile collar flange

	DN	PN	⌀D	H_2
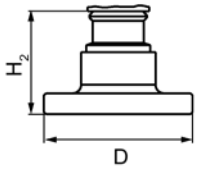	50	16	94 mm (3.7")	Approx. 52 mm (2")
	65	16	113 mm (4.4")	
	80	16	133 mm (5.2")	
	100	16	159 mm (6.3")	

Approvals	EHEDG

DIN 11864-2 Form A - sterile groove flange

	DN	PN	⌀D	H_2
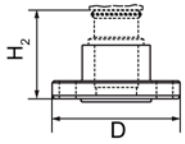	50	16	94 mm (3.7")	Approx. 52 mm (2")
	65	16	113 mm (4.4")	
	80	16	133 mm (5.2")	
	100	16	159 mm (6.3")	
Approvals	EHEDG			

DIN 11864-3 Form A - sterile collar sockets

	DN	PN	⌀D	H_2
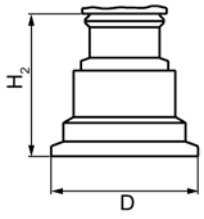	50	25	77.5 mm (3.1")	Approx. 52 mm (2")
	65	25	91 mm (3.6")	
	80	16	106 mm (4.2")	
	100	16	130 mm (5.1")	
Approvals	EHEDG			

Tri-Clamp as per DIN 32676				
	DN	**PN**	**⌀D**	**H_2**
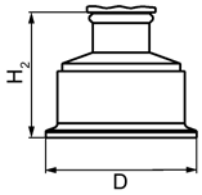	50	16	64 mm (2.5")	Approx. 52 mm (2")
	65	16	91 mm (3.6")	

Other connections

Varivent® connector				
	DN	**PN**	**⌀D**	**H_2**
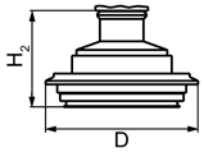	40-125	40	84 mm (3.3")	Approx. 52 mm (2")
Approvals	EHEDG			

Connection in accordance with DRD				
	DN	**PN**	**⌀D**	**H_2**
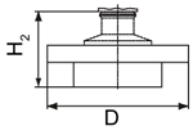	65	40	105 mm (4.1")	Approx. 52 mm (2")

BioConnect™ connectors

BioConnect™ screwed joint

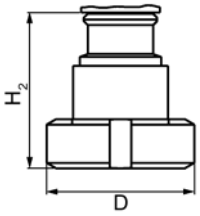

	DN	PN	⌀D	H_2
	50	16	82 mm (3.2")	Approx. 52 mm (2")
	65	16	105 mm (4.1")	
	80	16	115 mm (4.5")	
	100	16	145 mm (5.7")	
	2"	16	82 mm (3.2")	
	2½"	16	105 mm (4.1")	
	3"	16	105 mm (4.1")	
	4"	16	145 mm (5.7")	
Approvals	EHEDG			

BioConnect™ flange connector

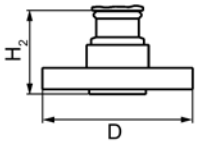

	DN	PN	⌀D	H_2
	50	16	110 mm (4.3")	Approx. 52 mm (2")
	65	16	140 mm (5.5")	
	80	16	150 mm (5.9")	
	100	16	175 mm (6.9")	
	2"	16	100 mm (3.9")	
	2½"	16	110 mm (4.3")	
	3"	16	140 mm (5.5")	
	4"	16	175 mm (6.9")	
Approvals	EHEDG			

BioConnect™ clamp connector

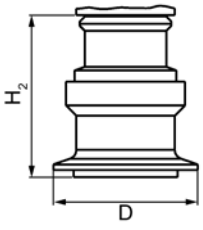

	DN	PN	⌀D	H_2
	50	16	77.4 mm (3.0")	Approx. 52 mm (2")
	65	10	90.9 mm (3.6")	
	80	10	106 mm (4.2")	
	100	10	119 mm (4.7")	
	2"	16	64 mm (2.5")	
	2½"	16	77.4 mm (3.0")	
	3"	10	90.9 mm (3.6")	
	4"	10	119 mm (4.7")	
Approvals	EHEDG			

Connect S™ flanged joint				
	DN	**PN**	**⌀D**	**H_2**
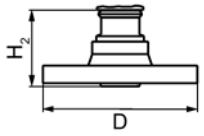	50	16	125 mm (4.9")	Approx. 52 mm (2")
	65	10	145 mm (5.7")	
	80	10	155 mm (6.1")	
	100	10	180 mm (7.1")	
	2"	16	125 mm (4.9")	
	2½"	10	135 mm (5.3")	
	3"	10	145 mm (5.7")	
	4"	10	180 mm (7.1")	
Approvals	EHEDG			

Other connections

BioControl™ connector				
	DN	**PN**	**⌀D**	**H_2**
	50	16	90 mm (3.5")	Approx. 52 mm (2")
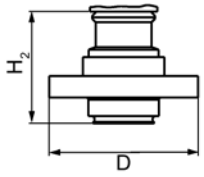	65	16	120 mm (4.7")	
Approvals	EHEDG			

14.4.4 PMC Style

Connections for the paper industry

PMC Style Standard				
	DN	**PN**	**⌀D**	**H_2**
	–	–	40.9 mm (1.6")	Approx. 36.8 mm (1.4")
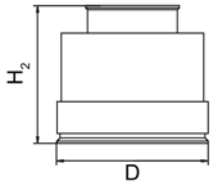	M44x1.25 cap nut			

PMC-Style Minibolt				
	DN	**PN**	**⌀D**	**H_2**
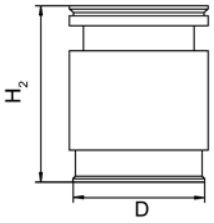	–	–	26.3 mm (1.0")	Approx. 33.1 mm (1.3")

14.4.5 Special connections

Tank connection

TG52/50 and TG52/150				
	DN	**PN**	**⌀D**	**H_2**
	TG52/50			
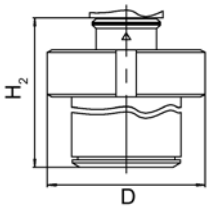	43.5 mm	10	63 mm (2.5")	Approx. 63 mm (2.5")
	TG52/150			
	43.5 mm	10	63 mm (2.5")	Approx. 170 mm (6.7")

SMS connectors

SMS sockets with union nut				
	DN	**PN**	**⌀D**	**H_2**
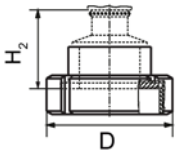	2"	25	84 mm (3.3")	Approx. 52 mm (2.1")
	2½"	25	100 mm (3.9")	
	3"	25	114 mm (4.5")	

SMS threaded sockets

	DN	PN	⌀D	H_2
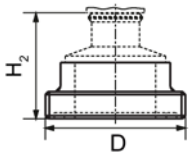	2"	25	70 x 1/6 mm (2.8")	Approx. 52 mm (2.1")
	2½"	25	85 x 1/6 mm (3.3")	
	3"	25	98 x 1/6 mm (3.9")	

IDF connectors

IDF sockets with union nut

	DN	PN	⌀D	H_2
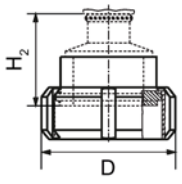	2"	25	77 mm (3.0")	Approx. 52 mm (2.1")
	2½"	25	91 mm (3.6")	
	3"	25	106 mm (4.2")	

IDF threaded sockets

	DN	PN	⌀D	H_2
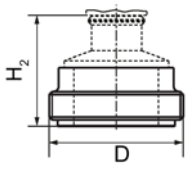	2"	25	64 mm (2.5")	Approx. 52 mm (2.1")
	2½"	25	77.5 mm (3.1")	
	3"	25	91 mm (3.6")	

Spare parts / accessories

15

15.1 Order data

In order to ensure that the ordering data you are using is not outdated, the latest ordering data is always available on the Internet:

Catalog process instrumentation (http://www.siemens.com/processinstrumentation/catalogs)

Selection and order data	Order no.
CD "sitrans p - pressure transmitters" with documentation in German/English/French/Spanish/Italian, etc.	A5E00090345
HART modem	
• With USB interface	7MF4997-1DB[1) D)]
Weld-in support for PMC connection	
For Series SITRANS P DS III and SITRANS P300	
• PMC Style Standard: Thread 1½"	7MF4997-2HA
• PMC-Style Minibolt: flush mounted 1"	7MF4997-2HB
Gaskets for PMC connection, (1 set = 5 pieces)	
• PTFE gasket for PMC Style Standard: Thread 1½"	7MF4997-2HC
• Viton gasket for PMC Style Minibolt: flush mounted 1"	7MF4997-2HD
Weld-in adapter for PMC connection	
For connection of weld-in support delay during welding for:	
• PMC Style Standard: Thread 1½"	7MF4997-2HE
• PMC-Style Minibolt: flush mounted 1"	7MF4997-2HF

1) Available from stock

D) Subject to export regulations AL: N, ECCN, EAR99H

15.2 Spare parts/accessories for SITRANS P DS III

Selection and order data	Order no.
Mounting bracket and fastening parts	
For SITRANS P DS III, DS III PA and DS III FF	
For gauge pressure transmitter (7MF403.-.....-..C.)	
For absolute pressure transmitter (7MF423.-.....-..C.)	
• Made of steel	7MF4997-1AB

Selection and order data	Order no.
• Made of stainless steel	7MF4997-1AH
Mounting bracket and fastening parts	
For SITRANS P DS III, DS III PA and DS III FF	
For gauge pressure transmitter (7MF403.-.....-..A., -..B. and -..D.)	
For absolute pressure transmitter (7MF423.-.....-..A., -..B. and -..D.)	
• Made of steel	7MF4997-1AC
• Made of stainless steel	7MF4997-1AJ
Mounting bracket and fastening parts	
For SITRANS P DS III, DS III PA and DS III FF	
Differential pressure transmitter with flange thread	
• Made of steel	
For thread M10 (7MF433.-... and 7MF443.-...)	7MF4997-1AD
For thread M12 (7MF453.-...)	7MF4997-1AE
• Made of stainless steel	
For thread M10 (7MF433.-... and 7MF443.-...)	7MF4997-1AK
For thread M12 (7MF453.-...)	7MF4997-1AL
Mounting bracket and fastening parts	
For SITRANS P DS III, DS III PA and DS III FF	
Differential and absolute pressure transmitter with flange thread 7/16-20 UNF (7MF433.-..., 7MF443.-... and 7MF453.-...)	
• Made of steel	7MF4997-1AF
• Made of stainless steel	7MF4997-1AM
Cover	
For SITRANS P DS III, DS III PA and DS III FF	
• Made of aluminum die casting, including gasket	
Without inspection window	7MF4997-1BB
With inspection window	7MF4997-1BE
• Made of stainless steel, including gasket	
Without inspection window	7MF4997-1BC
With inspection window	7MF4997-1BF
Digital display	
For SITRANS P DS III, DS III PA and DS III FF	
Including the fastening material	7MF4997-1BR
Measuring point label	
• not labeled (five pieces)	7MF4997-1CA
• labeled (1 unit) Specifications as per Y01 or Y02, Y15 and Y16 (refer to SITRANS P pressure transmitter)	7MF4997-1CB-Z Y..: .....

Selection and order data	Order no.
Fastening screws, 50 pieces for: • Measuring point label • Earthing and connecting terminals • Digital display	7MF4997-1CD
Locking screws, (1 set = 2 pieces) for pressure cap	
• Made of stainless steel	7MF4997-1CG
• Made of Hastelloy	7MF4997-1CH
Vent valves, complete (1 set = 2 pieces)	
• Made of stainless steel	7MF4997-1CP
• Made of Hastelloy	7MF4997-1CQ
Electronics	
• For SITRANS P DS III	7MF4997-1DK
• For SITRANS P DS III PA	7MF4997-1DL
• For SITRANS P DS III FF	7MF4997-1DM
Network card	
• For SITRANS P DS III	7MF4997-1DN
• For SITRANS P DS III PA and DS III FF	7MF4997-1DP
Sealing rings for pressure caps made of	
• FPM (Viton)	7MF4997-2DA
• PTFE (Teflon)	7MF4997-2DB
• FEP (with silicon core, suitable for food)	7MF4997-2DC
• FFPM (Kalrez, Compound 4079)	7MF4997-2DD
• NBR (Buna N)	7MF4997-2DE

15.3 Order data for SIMATIC PDM

You can find ordering data in the Catalog FI 01 "Field devices for process automation in the Chapter "Communication and software > Software > SIMATIC PDM - Process Device Manager".

See also

Catalog process instrumentation (http://www.siemens.com/processinstrumentation/catalogs)

15.4 Ordering data for PROFIBUS accessories

In the Industrial Communication catalog (IK PI) you can find additional accessories that are required for communication with our devices and PROFIBUS.

For the latest updates to this catalog, please visit the Industry Mall (https://mall.industry.siemens.com/).

Appendix

A

A.1 Certificate

The certificates can be found on the enclosed CD and on the Internet under:

Certificates (http://www.siemens.com/processinstrumentation/certificates)

A.2 Certificates (China)

Additional information for China

The product is based on the standards QDSSC 001-2013, QDSSC 002-2013, QDSSC 003-2013 and meets the requirements of CMC and CPA.

CMC

辽制 02000001 号

CPA

中华人民共和国

计量器具型式批准证书

西门子传感器与通讯有限公司：

根据中华人民共和国计量法第十三条和中华人民共和国计量法实施细则有关规定，对你单位申请型式批准的计量器具新产品经审查合格，现予批准，并可使用以下标志和编号：

PA

07F208-21

批准日期：2007.6.21

批准人签名：许国芳

经批准的计量器具新产品（名称、类别、型号）：

名　称：压力变送器

型　号：7MF4033 系列

名　称：压力变送器

型　号：7MF4034 系列

其技术指标为：

最大允许误差：±0.075%FS

最大允许误差：±0.075%FS

批准部门

（盖章）

中华人民共和国

计量器具型式批准证书

西门子传感器与通讯有限公司：

根据中华人民共和国计量法第十三条和中华人民共和国计量法实施细则有关规定，对你单位申请型式批准的计量器具新产品经审查合格，现予批准，并可使用以下标志和编号：

PA

07F209-21

批准日期：2007.6.21

批准人签名：许国荣

经批准的计量器具新产品（名称、类别、型号）：

名　称：绝压变送器

型　号：7MF4233 系列

7MF4333 系列

名　称：绝压变送器

型　号：7MF4234 系列

7MF4334 系列

其技术指标为：

最大允许误差：±0.075%FS

最大允许误差：±0.075%FS

批准部门（盖章）

中华人民共和国

计量器具型式批准证书

西门子传感器与通讯有限公司：

根据中华人民共和国计量法第十三条和中华人民共和国计量法实施细则有关规定，对你单位申请型式批准的计量器具新产品经审查合格，现予批准，并可使用以下标志和编号：

PA
07F210-21

批准日期：2007.6.21
批准人签名：许国荣

经批准的计量器具新产品（名称、类别、型号）：

名　称：差压变送器
型　号：7MF4133 系列
7MF4533 系列
名　称：差压变送器
型　号：7MF4134 系列
7MF4534 系列

其技术指标为：

最大允许误差：±0.075%FS
最大允许误差：±0.075%FS

批准部门
（盖章）

中华人民共和国

计量器具型式批准证书

西门子传感器与通讯有限公司

根据中华人民共和国计量法第十三条和中华人民共和国计量法实施细则有关规定，对你单位申请型式批准的计量器具新产品经审查合格，现予批准，并可使用以下标志和编号：

PA
07F211-21

批准日期：2007.5.24

批准人签名：

经批准的计量器具新产品（名称、类别、型号）：

名　称：液位差压变送器
型　号：7MF4633 系列

名　称：液位差压变送器
型　号：7MF4634 系列

其技术指标为：

基本误差：±0.15%FS
基本误差：±0.15%FS

批准部门
（盖章）

A.3 Literature and standards

No.	Standard	Description
/1/	IEC 61508 Section 1-7	Functional safety of following systems: • Safety-instrumented • Electrical • Electronic • Programmable Target group: Manufacturers and suppliers of equipment
/2/	IEC 61511 Section 1-3	Functional safety - Safety systems for the process industry Target group: Planners, constructors and users

A.4 Technical support

Technical Support

If this documentation does not provide complete answers to any technical questions you may have, contact Technical Support at:

- Support request (http://www.siemens.com/automation/support-request)
- More information about our Technical Support is available at Technical support (http://www.siemens.com/automation/csi/service)

Internet Service & Support

In addition to our documentation, Siemens provides a comprehensive support solution at:

- Service&Support (http://www.siemens.com/automation/service&support) where you will find support news, support documents including EDDs and software, and also support from experts.

Additional Support

If you have additional questions about the device, please contact your local Siemens representative.

Find your local contact partner at:

- Partner (http://www.automation.siemens.com/partner)

Documentation for various products and systems is available at:

- Instructions and manuals (http://www.siemens.com/processinstrumentation/documentation)

See also

Product information on SITRANS P in the Internet (http://www.siemens.com/sitransp)

Process instrumentation catalog (http://www.siemens.com/processinstrumentation/catalogs)

E-mail (mailto:support.automation@siemens.com)

List of abbreviations/acronyms

B

B.1 Pressure transmitter

List of abbreviations

Table B- 1 Tags

Abbreviation	In full	Meaning
OUT	Output	
PRIM	Primary variable	
SEC	Secondary variable	
SENS	Raw pressure value	
TMP E	Electronics temperature	
TMP S	Sensor temperature	
TOTAL	Totalizer output	

Table B- 2 Units

Abbreviation	In full	Meaning
bar a	Bar absolute	Pressure unit for absolute pressure
bar g	Bar gauge	Pressure unit for gauge pressure
lb	Pound	Unit of weight
psi a	psi absolute	Pressure unit for absolute pressure
psi g	psi gauge	Pressure unit for gauge pressure
mbar	Millibar	Unit for pressure
Pa	Pascal	Unit for pressure
hPa	Hectopascal	Unit for pressure
psi	Pound per square inch	Unit for pressure
g/cm²	Gram per square centimeter	Unit for pressure
kg/cm²	Kilogram per square centimeter	Unit for pressure
mmH_2O	Millimeter water column	Unit for pressure
inH_2O	Inch water column	Unit for pressure
ftH2O	Foot water column	Unit for pressure
mmHg	Millimeter mercury [column]	Unit for pressure
inHg	Inch mercury [column]	Unit for pressure
l	Liter	Unit for volume
norml	Standard liter	Unit for volume
m^3	Cubic meter	Unit for volume
$normm^3$	Standard cubic meter	Unit for volume
Hl	Hectoliter	Unit for volume
$inch^3$	Cubic inch	Unit for volume

Abbreviation	In full	Meaning
stdft³	Standard cubic foot	Unit for volume
ft³	Cubic foot	Unit for volume
yd³	Cubic yard	Unit for volume
gal	Gallon (USA)	Unit for volume
Imp. gallon	Imperial gallon	Unit for volume
Bushel	Bushel	Unit for volume
bl	Barrel	Unit for volume
Barrel liquid	Barrel liquid	Unit for volume
s	Second	Unit for time
min	Minute	Unit for time
h	Hour	Unit for time
d	Day	Unit for time
K	Kelvin	Temperature unit
°C	degrees Celsius	Temperature unit
°F	degrees Fahrenheit	Temperature unit
°R	degrees Rankine	Temperature unit

Table B- 3 Other abbreviations

Abbreviation	In full	Meaning
CLASS		Term for nominal pressure measured in psi
PED	Pressure Equipment Directive	
DN	Diameter Nominal	Nominal diameter measured in mm
DP	Distributed I/O	Protocol for the transmission of information between field device and automation system over PROFIBUS.
FDE	Fault disconnection electronics	
FISCO	Fieldbus Intrinsically Safety Concept	
GSD	Device master data	
HART	Highway Addressable Remote Transducer	Standard protocol for the transmission of information between field device and automation system.
F&B	Food and beverage industry	
PA	Process automation	Protocol for the transmission of information between field device and automation system over PROFIBUS.
PDM	Process Device Manager	
PN	Pressure Nominal	Nominal pressure measured in bar
PNO	PROFIBUS User Organization	
PROFIBUS	Process Field Bus	Manufacturer-independent standard for the networking of field devices, e.g. PLC, drives, or sensors. PROFIBUS can be used with the DP and PA protocols.
SELV	Safety extra-low voltage Safety extra-low-voltage	

B.2 Functional safety

Abbreviation	Full term in English	Meaning
CFC	Continuous Function Chart	Software package for graphical, technology-oriented configuration of automation tasks
FIT	Failure in Time	Frequency of failure Number of faults withing 10^9 hours
HFT	Hardware Fault Tolerance	Hardware fault tolerance: Capability of a function unit to continue executing a required function in the presence of faults or deviations.
MooN	"M out of N" voting	Classification and description of the safety-instrumented system in terms of redundancy and the selection procedures used. A safety-instrumented system or part that consists of "N" independent channels. The channels are connected to each other in such a way that "M" channels are in each case sufficient for the device to perform the safety instrumented function. Example: Pressure measurement: 1oo2 architecture. A safety-instrumented system decides that a specified pressure limit has been exceeded if one out of two pressure sensors reaches this limit. In a 1oo1 architecture, there is only one pressure sensor.
MTBF	Mean Time Between Failures	Average period between two failures
MTTR	Mean Time To Restoration	Average period between the occurrence of a fault in a device or system and restoration of functionality
PFD	Probability of Dangerous Failure on Demand	Probability of dangerous failures of a safety function on demand
PFD_{AVG}	Average Probability of Dangerous Failure on Demand	Average probability of dangerous failures of a safety function on demand
SFF	Safe Failure Fraction	Proportion of safe failures: Proportion of failures without the potential to bring the safety-instrumented system into a dangerous or non-permissible functional status.
SIL	Safety Integrity Level	The international standard IEC 61508 defines four discrete Safety Integrity Levels (SIL 1 to SIL 4). Each level corresponds to a range of probability for failure of a safety function. The higher the Safety Integrity Level of the safety-instrumented system, the lower the probability that it will not execute the required safety functions.
SIS	Safety Instrumented System	A safety-instrumented system (SIS) executes the safety functions that are required to achieve or maintain a safe status in a system. It consists of a sensor, logic unit/control system and final controlling element.

Glossary

Coupler

connects the DP and PA segments in PROFIBUS. It has a fixed transmission speed. The transmission speed is 45.45 kbps (DP) to 31.25 kbps (PA).

Dangerous failure

Failure with the potential to switch a safety-instrumented system to a hazardous or non-functioning safety status.

Diameter nominal

The diameter nominal is specified according to DIN EN ISO 6708 by the term DN followed by a dimensionless number approximating the inner diameter in millimeters. According to DIN 2440 (medium-weight threaded pipe), a DN 50 pipe, for example, identifies a pipe with an outer diameter of 60.3 mm and a wall thickness of 3.65 mm (inner diameter therefore 53 mm).

EEPROM

EEPROM (Electrically Erasable Programmable Read-Only Memory) is a non-volatile, electronic memory chip.

EEPROM are often used when individual data bytes change over long intervals and need to be stored and retained if there is a network failure, for example configuration data or operating hours counters.

Failure/Fault

Failure:
A resource is no longer capable of executing a required function.

Fault:
Undesired state of a resource indicated by the incapability of executing a required function.

Fault

→ *Failure/Fault*

Fault tolerance

Fault tolerance N means that a device can execute the intended task even when N faults exist. The device fails to execute the intended function in the case of N+1 faults.

Final controlling element

Converter that converts electric signals into mechanical or other non-electric variables.

Firmware

Firmware is a type of software that is embedded in a chip in electronic devices in contrast to software proper that is stored on hard disks or other media. Today, firmware is usually stored in a flash memory or EEPROM.

The firmware usually contains elementary functions for controlling the device or input and output routines.

Frequency shift keying

Frequency shift keying is a simple modulation method in which the digital values 0 and 1 are represented by two different frequencies.

Frequency shift keying (FSK)

→ *Frequency shift keying*

Function block

A named block consisting of one or more inputs, outputs, and included parameters.

Function blocks represent the basic automation functions executed by an application in a way as independent as possible from the details of I/O devices and the network. Each function block processes input parameters using a specified algorithm and a set of internally stored parameters. They produce output parameters which are available for use inside the same function block application or by other function block applications.

Generic Station Description

The generic station description (GSD) contains the information necessary for the control system to establish communication.

GSD

→ *Generic Station Description*

Link

is a coupler with a variable transmission speed. The transmission speed is a maximum of 12 Mbps (DP) to 31.25 kbps (PA).

Non-volatile memory

→ *EEPROM*

Risk

Combination of the probability of damage occurring and the extent of the damage.

Safety function

Defined function executed by a safety-instrumented system with the objective of attaining or maintaining a safe status of the system by taking a defined hazardous incident into account.

Example:
Limit pressure monitoring

Safety Integrity Level

→ *SIL*

Safety-instrumented system

A safety-instrumented system (SIS) executes the safety functions that are required to achieve or maintain a safe status in a system. It consists of a sensor, logic unit/control system and final controlling element.

Example:
A safety-instrumented system is made up of a pressure transmitter, a limit signal sensor and a control valve.

Sensor

Converter that converts mechanical or other non-electric variables into electric signals.

SIL

The international standard IEC 61508 defines four discrete safety integrity levels (SIL) from SIL 1 to SIL 4. Every level corresponds to a probability range for the failure of a safety function. The higher the SIL of the safety-instrumented system, the higher the probability that the required safety function works.

The achievable SIL is determined by the following safety-instrumented characteristics:

- Average probability of failure on demand (PFD_{AVG})
- Hardware fault tolerance (HFT)
- Safe failure fraction (SFF)

srli2

→ *srlin2*

srlin2

"srli2" or "srlin2" is a type of square root extracting characteristic curve for the output current. This characteristic curve type is proportional to the flow rate, linear in two levels up to the application point and has a pre-defined application point of 10%.

"srli2" or "srlin2" are synonymous and technically there is no difference between them. The abbreviation "srli2" is used in sections that refer to the on-site operation of the pressure transmitter. The reason for the abbreviation is that the pressure transmitter display is restricted to five characters. The abbreviation "srlin2" is used for HART operation.

Zero point adjustment

After the following functions, the measuring range will have changed:

- Zero point calibration
- LO calibration
- HI calibration

If you have used one of these functions, the measuring range will have changed. This changed, remaining measuring range is called the zero point offset.

Refer to the **Operation** section for the corresponding modes of these functions.

Index

3

3A, 236

A

Additional Support, 254
Address
  PROFIBUS, 88
Ambient temperature, 214, 215, 216, 217, 217
  Effect, 203, 204, 205, 206, 207, 208, 210, 211, 213
Approval
  3A, 236
  EHEDG, 236
Approval plate, (Nameplate with approval information)
Arrow display, 76
AUTO, 105

B

Bridge output voltage, 30, 31, 32
Bus address, 88
button and function lock
  Activate, 133
Buttons, 71

C

C2 connection, 170
Calibration
  HI, 93
  LO, 91
Certificate, 249
Certificates, 15
Certification, 249
Characteristics
  Safety, 132
Checksum, 154
Configuration, 165
Connector
  M12, 69
Correct usage, (See improper device modifications)
CPU, 144
Customer Support Hotline, 254

D

Damping, 104
Data consistency, 165
Data transmission
  acyclic, 170
  cyclic, 165
  Floating point representation, 167
Decimal point, 90
Device
  Electrostatic-sensitive, 19, 184
Device mode, 88
Device operating mode, 161
Diagnostic information
  Transmission, 168
Diagnostic information, 74
Diagnostics messages, 168
Differential pressure, 23, 23
Digital display, 97
Direct sunlight, 43
Display
  Error message, 192
  Status code, 189
Display of unit, 74

E

EDD, 145
EHEDG, 236
Electromagnetic compatibility, 214, 215, 216, 217, 218
Electronics, 133
Electrostatic-sensitive device (ESD), 19, 184
EMC, 214, 215, 216, 217, 218
Error message, 192

F

Filling liquid, 30, 32, 33
Firmware, 11
Flange, 32, 49
Flow, 23, 82
Function block
  Analog input, 104, 114
Function chart, 34

G

Generic Station Description, (See GSD)
GMD file, 89
GSD, 162
GSD file
  Internet address, 165

H

Hazardous area
  Laws and directives, 15
History, 11
Hotline, 254

I

Improper device modifications, 16
Install
  Remote seal, 53
Installation, 45, 45, 46
Internet, 254

K

Keypad lock, 116

L

Label, 26
Level, 24
Limits
  Alarm, 117
  Warning, 117
Load, 202
Locking of buttons, 81

M

M12 connector, 69
Master
  Class 2 master, 170
  Class-1 master, 38, 165
  Class-2 master, 38
Measured value display, 74, 79
Measured value display, 74, 79
Measuring cell
  Absolute pressure, 34
  Differential pressure and flow rate, 31
  Gauge pressure, 30
  Level, 32
Mode
  13, 82
  14, 84
  15, 88
  16, 88
  17, 90
  18, 90
  19, 91
  20, 92
Mounting bracket, 46
Mounting flange, 32
MTTR, 133

N

Nameplate with general information, 26

O

Operation
  Local, 79
Output scaling, 104, 108, 113

P

Pairs of min/max pointer, 122
Parameter
  Transmitter type, 82
PDM display
  Error message, 192
  Status code, 189
Position correction, 80, 80
Process connection, 25
PROFIBUS, 37, 95
  Automation system, 38
  Communication structure, 95
  DP, 37
  Eigenschaft, 38
  Functions, 106
  Operation, 106
  PA, 37
  Setting the address, 165
  Topology, 37
PROFIsafe, 141
Proof test, 133

Q

Qualified personnel, 17

R

Remote seal
Description, 36
Install, 53
Maintenance, 187
Resetting
Delivery state, 127
Factory settings, 127
Restart, 128

S

Safety
Checking, 133
Safety function, 129
Safety Integrity Level, 143
Scaling
Measured value, 104, 108, 113
Scope of delivery, 12
Service, 254
Setting
Height measurement, 108
Level measurement, 108
Mass measurement, 110
Volume measurement, 109
Shut-off valve, 174, 176, 178, 179, 180
SIL, 143
Simulation, 104, 122, 122
Software package
S7-F, 144
Stabilizing valve, 176, 177, 178, 180
Status, 167, 189
Status, 167, 189
Status code, 168, 189
Status code, 168, 189
Status display, 76
Structure, 24
Support, 254

T

Tank connection, 243
Test certificates, 15
Transducer block
for electronics temperature, 96, 103
for pressure, 96
Trim
Sensor, 125
Turning range, 60

U

Unit
for level, 86
for mass, 87
for pressure, 85
for temperature, 87
for user-specific, 87
for volume, 85

V

Variable, 82
Vent valve, 178, 180

W

Warm start, 128
Watchdog, 169
Write protection, 81, 133

Z

Zero point adjustment, 90
Zero point calibration, 80, 80, 91

Get more information

www.siemens.com/processautomation

www.siemens.com/processinstrumentation

Siemens AG
Process Industries and Drives
Process Automation
76181 Karlsruhe
GERMANY

Subject to change without prior notice
A5E00053276-08
© Siemens AG 2016

A5E00053276

A5E00053276

www.siemens.com/automation

PRO services

Installation, Operation, and Maintenance Manual

i-*ALERT®2* Equipment Health Monitor

ITT

ENGINEERED FOR LIFE

Table of Contents

Introduction and Safety 2
Introduction 2
Inspect the package 2
Limited warranty 2
Safety 3
Safety terminology and symbols 3
Safety regulations for Ex-approved products in potentially explosive atmosphere 3
Product approval standards 4

Product Description 7
General description i-*ALERT®2* Condition Monitor 7

Installation 8
Attach the i-*ALERT®2* Equipment Health Monitor to the pump 8

Commissioning, Startup, Operation, and Shutdown 11
Activate the i-*ALERT®2* Equipment Health Monitor 11
Reset the i-*ALERT®2* Equipment Health Monitor 12
i-*ALERT®2* Equipment Health Monitor routine operation 13

Maintenance 14
Guidelines for i-*ALERT®2* Equipment Health Monitor disposal 14

Troubleshooting 15
i-*ALERT®2* Equipment Health Monitor troubleshooting 15

Introduction and Safety

Introduction

Purpose of this manual

The purpose of this manual is to provide necessary information for:

- Installation
- Operation
- Maintenance

CAUTION:
Read this manual carefully before installing and using the product. Improper use of the product can cause personal injury and damage to property, and may void the warranty.

NOTICE:
Save this manual for future reference, and keep it readily available at the location of the unit.

Requesting other information

For instructions, situations, or events that are not considered in this manual or in the sales documents, please contact your ITT representative. Always specify the exact product type and identification code when requesting technical information or spare parts.

Inspect the package

1. Inspect the package for damaged or missing items upon delivery.
2. Note any damaged or missing items on the receipt and freight bill.
3. File a claim with the shipping company if anything is out of order.
   If the product has been picked up at a distributor, make a claim directly to the distributor.

Limited warranty

Goulds Pumps, Inc. ("Goulds") warrants to the original purchaser that your i-*ALERT®2* Equipment Health Monitor (the "Product") shall be free from defects in materials and workmanship under normal use for a period of one (1) year from the date of shipment. This Limited Warranty does not cover software embedded in the Product and the services provided by Goulds to owners of the Product.

Due to the varied ways that Product(s) can be accessed and/or configured during use, battery life is excluded from warranty. It is your responsibility to backup any data, software, or other materials you may have stored or preserved on the Product. It is likely that such data, software, or other materials will be lost or reformatted during service, and Goulds will not be responsible for any such damage or loss. Recovery and reinstallation of software programs and user data are not covered under this Limited Warranty. The Limited Warranty does not apply to any software, even if packaged or sold with the Product or embedded in the Product. We are not liable for any damage a mobile app may inflict on companion product

To view the full details of the Limited Product Warranty please go to: www.i-alert.com/warranty

Safety

WARNING:

- The operator must be aware of safety precautions to prevent physical injury.
- Operating, installing, or maintaining the unit in any way that is not covered in this manual could cause death, serious personal injury, or damage to the equipment. This includes any modification to the equipment or use of parts not provided by ITT. If there is a question regarding the intended use of the equipment, please contact an ITT representative before proceeding.
- Installation, Operation and Maintenance manuals clearly identify accepted methods for disassembling units. These methods must be adhered to.

Observe all safety messages highlighted in other sections of this manual.

Safety terminology and symbols

About safety messages

It is extremely important that you read, understand, and follow the safety messages and regulations carefully before handling the product. They are published to help prevent these hazards:

- Personal accidents and health problems
- Damage to the product
- Product malfunction

Hazard levels

Hazard level	Indication
DANGER:	A hazardous situation which, if not avoided, will result in death or serious injury
WARNING:	A hazardous situation which, if not avoided, could result in death or serious injury
CAUTION:	A hazardous situation which, if not avoided, could result in minor or moderate injury
NOTICE:	• A potential situation which, if not avoided, could result in undesirable conditions • A practice not related to personal injury

Safety regulations for Ex-approved products in potentially explosive atmosphere

Description of ATEX

The ATEX directives are a specification enforced in EU for electrical and non-electrical equipment. ATEX deals with the control of potentially explosive atmospheres and the standards of equipment and protective systems used within these atmospheres. The relevance of the ATEX requirements is not limited to Europe. You can apply these guidelines to equipment installed in any potentially explosive atmosphere.

Description of ETL

The ETL Mark is proof of product compliance to North American safety standards. Authorities Having Jurisdiction(AHJs) and code officials across the US and Canada accept the ETL Listed Mark as proof of product compliance to published industry standards.

Description of IECEx

The IECEx certificates of conformity attest that a sample of the Ex product, have been independently tested and found to comply with the International Standards. It also attests that the manufacturing site has been audited to verify that the manufacturer's quality system meets IECEx requirements.

Safety regulations regarding the Battery

Do not charge, short circuit, crush, dissemble, heat above 100°C (212°F), incinerate or expose contents to water.

Personal requirements

ITT disclaims all responsibility for work done by untrained and unauthorized personnel.
These are the personnel requirements for Ex-approved products in potentially explosive atmospheres:

- All users must know about the risks of electric current and the chemical and physical characteristics of the gas and/or vapor present in hazardous areas.
- The installation for Ex-approved products must be made in conformity to the international or national standards (IEC/EN 60079-17).

Product approval standards

Intrinsic safe standards

North America USA and Canada certifications

Standards tested to:

UL 913
UL 60079-0
UL 60079-11
CSA-C22.2 No. 157-92
CSA-C22.2 No. 60079-0:11
CSA-C22.2 No. 60079-11:14
Markings USA:
Class I, II, III; Division 1; Groups C, D, E, F, G
Class I; Zone 0, AEx ia IIB Ga (Groups C & D)
Markings Canada:
Class I, II, III; Division 1; Groups C, D, E, F, G
Ex ia IIB Ga (Groups C & D)
Ambient temperature: -40°C to 60°C | -40°F to 140°F

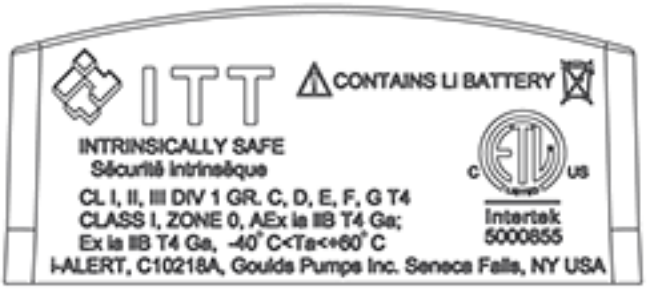

Europe and Worldwide certifications

Standards tested to:

ATEX

EN 60079-0:2012
EN 60079-11:2012
EN 60079-26:2007+COR1:2011
EN 50303:2000

IECEx

IEC 60079-0:2011
IEC 60079-11:2011
IEC 60079-26:2006

ATEX & IECEx Markings

I M1 Ex ia I Ma
II 1G Ex ia IIB T4 Ga
II 1D Ex ia IIIC Da T200°C Da
Ambient Temperature: -40°C to +60°C | -40°F to +140°F

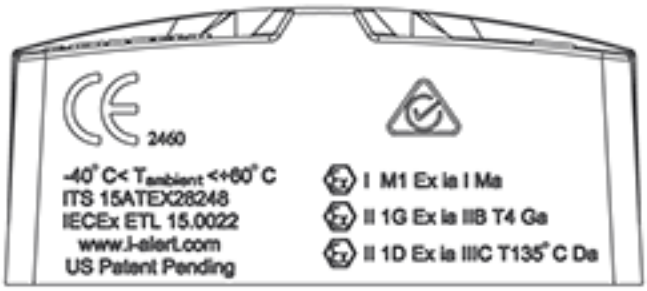

Electromagnetic compatibility certifications

Standards for testing i-*ALERT2* Equipment Health Monitor

Radiated Emissions
FCC 47CFR 15 Subpart B:2014
EN 61000-6-4:2007
Electro-Static Discharge Immunity Test
(EN 61000-4-2:1995 per EN 61000-6-2:2007 +AMD 1 Cor 12)
(EN 61000-4-2:2009 per ETSI EN 301 489-1 V1.9.2
Radiated, Radio-Frequency, Electromagnetic Immunity
(EN 61000-4-3:2002 per EN 61000-6-2:2007 +AMD 1 Cor 12)
(EN 61000-4-3:2006+A1:2008+A2:2010 per ETSI EN 301 489-1 V1.9.2
Power Frequency Magnetic Field Immunity Test
(EN 61000-4-8 1993 per EN 61000-6-2:2007 +AMD 1 Cor 12)

Standards for testing Bluetooth radio

Industry Canada, Interference-Causing Equipment Standard for Information Technology Equipment (ITE)
ICES-003 Issue 5 August 2012
Electromagnetic compatibility (EMC). Generic standards. Immunity for industrial environments
CENELEC EN 61000-6-2:2007 +AMD 1 Cor 12
Electromagnetic compatibility (EMC) Generic standards - Emission standard for industrial environments
CENELEC EN 61000-6-4:2007
Electromagnetic Compatibility (EMC) standard for radio equipment and services;
Part 1: Common technical requirements
ETSI EN 301 489-1 V1.9.2 (2011-09)
ElectroMagnetic Compatibility (EMC) standard for radio equipment;

Part 17: Specific conditions for Broadband Data Transmission Systems
ETSI EN 301 489-17 V2.2.1 (2012-09)

FCC Regulatory Information

The FCC identifier for the radio module contained in the i-*ALERT®2* device is **FCC ID: T7VPAN17**.

The radio module in the i-*ALERT®2* device meets the requirements for modular transmitter approval as detailed in FCC public Notice DA00-1407. Transmitter Operation is subject to the following two conditions:

1. Operation is subject to the following two conditions: (1) This device may not cause harmful interference, and
2. This device must accept any interference received, including interference that may cause undesired operation.

The FCC requires the user to be notified that any changes or modifications made to this device that are not expressly approved by ITT may void the user's authority to operate the equipment. This equipment has been tested and found to comply with the limits for a Class B digital device, pursuant to Part 15 of the FCC Rules. These limits are designed to provide reasonable protection against harmful interference in a residential installation. This equipment generates, uses and can radiate radio frequency energy and, if not installed and used in accordance with the instructions, may cause harmful interference to radio communications. However, there is no guarantee that interference will not occur in a particular installation. If this equipment does cause harmful interference to radio or television reception, which can be determined by turning the equipment off and on, the user is encouraged to try to correct the interference by one or more of the following measures:

- Reorient or relocate the receiving antenna.
- Increase the separation between the equipment and receiver.
- Connect the equipment into an outlet on a circuit different from that to which the receiver is connected.
- Consult the dealer or an experienced radio/TV technician for help

RF Exposure

To comply with FCC RF Exposure requirements, do not modify, remove or change the antenna on the radio module contained within the i-*ALERT®2* device.

The radiated output power of the radio with mounted ceramic antenna **(FCC ID: T7VPAN17)** is far below the FCC radio frequency exposure limits. Nevertheless, the radio shall be used in such a manner that the potential for human contact during normal operation is minimized.

Industry Canada Certification

The radio module contained in the i-*ALERT®2* device is licensed to meet the regulatory requirements of Industry Canada (IC), license**: IC: 216Q-PAN17.**

IC Notice

The radio module within the i-*ALERT®2* device complies with Canada RSS-GEN Rules. The device meets the requirements for modular transmitter approval as detailed in RSS-GEN.

Operation is subject to the following two conditions:

1. This device may not cause harmful interference, and
2. This device must accept any interference received, including interference that may cause undesired operation.

European R&TTE declaration of conformity

The Bluetooth module contained within the i-*ALERT®2* device is in compliance with the essential requirements and other relevant provisions of Directive 1999/5/EC. As a result of the conformity assessment procedure described in Annex III of the Directive 1999/5/EC.

The i-*ALERT®2* device can be used in the following countries: Austria, Belgium, Cyprus, Czech Republic, Denmark, Estonia, Finland, France, Germany, Greece, Hungary, Ireland, Italy, Latvia, Lithuania, Luxembourg, Malta, Poland, Portugal, Slovakia, Slovenia, Spain, Sweden, The Netherlands, the United Kingdom, Switzerland, and Norway.

Product Description

General description i-*ALERT®2* Condition Monitor

Description

The i-*ALERT®2* Equipment Health Monitor is a compact, battery-operated monitoring device that continuously measures the vibration and temperature of the pump. The i-*ALERT®2* Equipment Health Monitor uses blinking red LED and wireless notification to alert the pump operator when the pump exceeds vibration and temperature limits. This allows the pump operator to make changes to the process or the pump before catastrophic failure occurs. The Equipment Health Monitor is also equipped with a single green LED to indicate when it is operational and has sufficient battery life.

The i-*ALERT®2* Equipment Health Monitor also contains a Bluetooth radio that communicates to certain Bluetooth 4.0 equipped devices through a mobile application.

Data is shared between the i-*ALERT®2* Equipment Health Monitor, the mobile application, phone, and the data servers.

The i-*ALERT®2* Equipment Health Monitor will communicate sensor related data (such as vibration, temperature, runtime information, and device statistics) stored in the device to the mobile application. The mobile application will send commands to the device.

The Mobile application will back up device data as well as app usage information on the data servers.

The data servers will send the mobile application equipment technical data.

For full details about data storage and rights please review the Privacy Policy.

Alarm mode

The i-*ALERT®2* Equipment Health Monitor enters alarm mode when either vibration or temperature limits are exceeded over two consecutive readings within a 10 minute period. Alarm mode is indicated with 1 (one) red flashing LED within 2 (two) second intervals.

Warning and alarm values

Variable	Limit
Temperature (default)	80°C | 176°F
Vibration Alarm (0.1-1.5 ips)	100% increase over the baseline level
Vibration Warning (0.1-1.5 ips)	75% increase over the baseline level

Battery life

The i-*ALERT®2* Equipment Health Monitor battery is not replaceable. You must replace the entire unit once the battery runs out of power. The battery life is not covered as part of the standard 5-year pump warranty.

The following determines the “normal operating conditions” in which the 3-year battery life is determined:

- Temperature: 18°C | 65°F
- Dashboard connections (including trend download): Once per day
- FFT and Time Waveform usage: One tri-axial request per 14 days
- Operation time in Alarm: 25% of time

Installation

Attach the i-*ALERT*®*2* Equipment Health Monitor to the pump

CAUTION:
Always wear protective gloves. The equipment and the i-*ALERT*®*2* device can be hot.

Mounting options

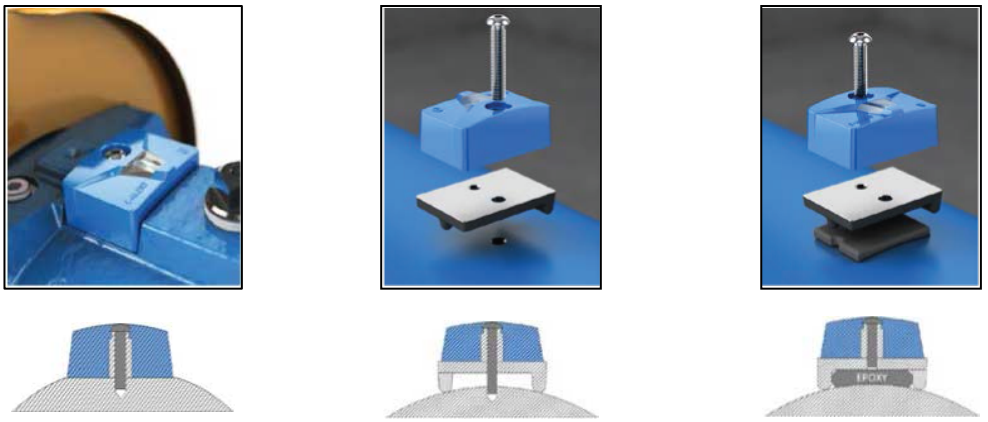

Figure 1: Mounting options

Mill a Slot	Drill and Tap	Epoxy[1]
Screw: ¼-28 x 1.125in	Screw: ¼-28 x 1.5in	Screw: ¼-28 x 1.125in
Slot: 2.25in L x 1.6in W	Tap: ¼-28 UNF x ¼in deep	Epoxy: application specific
Temperature: ****	Temperature: ***	Temperature: **
Vibration: ****	Vibration: ***	Vibration: ***
Prep Time: **	Prep Time: ***	Prep Time: ****

Epoxy[1] Not included

Epoxy recommendation

The epoxy used should be a two-part putty in stick form (not liquid) type, which contains metallic particles in order to enhance heat transfer. Epoxy of this type is commonly found at hardware and home improvement stores. The temperature range required and specific application determine the epoxy choice. Mount i-*ALERT*®*2* device to base using provided ¼-28 cap screw. Torque screw to 6 lb-ft. using a 5/32" size Allen Head wrench prior to the application of the epoxy.

Location selection

The i-*ALERT*®*2* device should be mounted on pumps or other rotating equipment as shown in the first image under “Mounting Options" (above) with the LED’s aligned with the shaft in order to maintain the preferred axis orientation shown below. Care should be taken to locate the device over the bearings, and to avoid placement on compliant surfaces such as coupling guards, and other light sheet metal. It is preferable to have one device over each bearing, but if that is not possible, monitoring the drive end is essential.

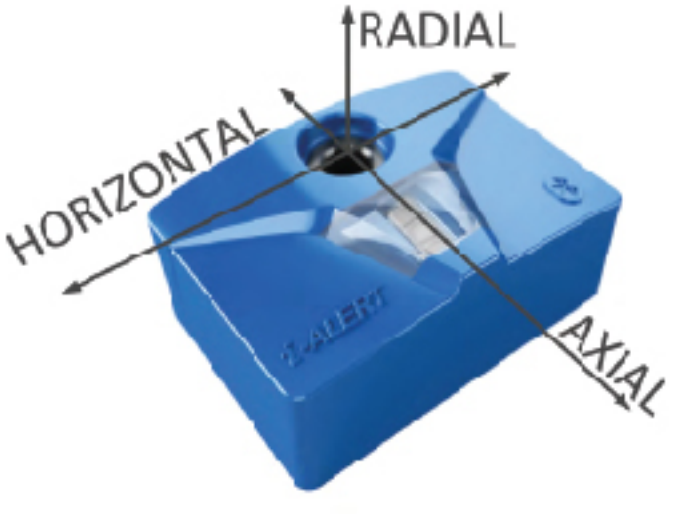

Figure 2: Location selection

App installation and registration

For installation guidance, video links can be found at the following site:
http://www.ittproservices.com/aftermarket-products/monitoring/i-alert2-condition-monitor/ (page)
To download the latest App, search for" i-ALERT2 condition monitor" in the Apple App Store.

Available on the App Store

To access the App it is necessary to create an account using a valid email in the registration tab on the login page.

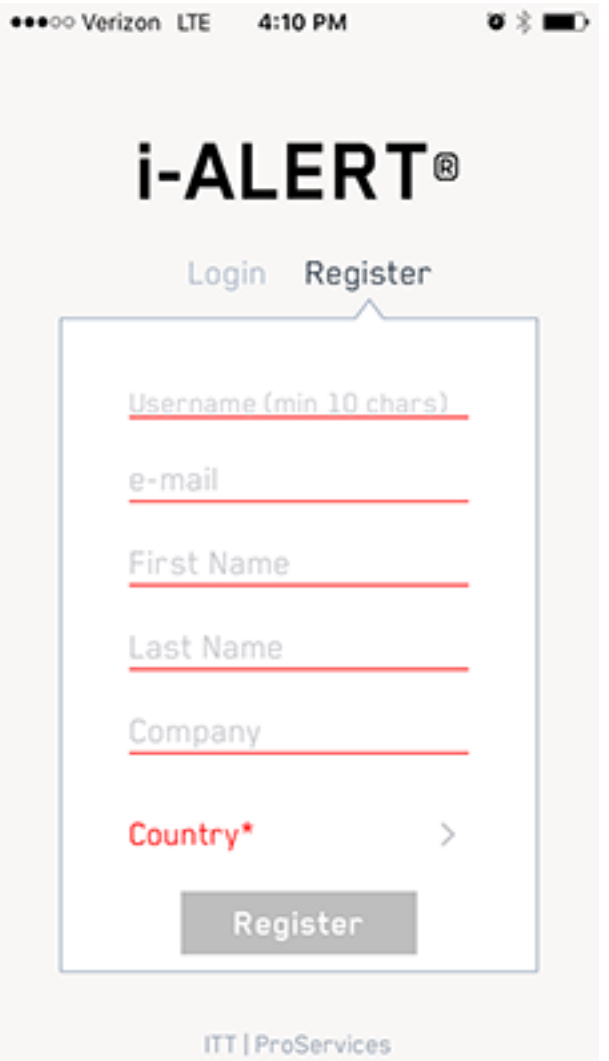

Figure 3: i-*ALERT*®*2* registration

Commissioning, Startup, Operation, and Shutdown

Activate the i-*ALERT*®*2* Equipment Health Monitor

Figure 4: i-*ALERT*®*2* Equipment Health Monitor activation

Steps to activate the i-*ALERT*®*2* Equipment Health Monitor

1. Remove the sticker.
2. The i-*ALERT*®*2* will look for light.

NOTICE: If in a dark environment use light source to activate.

3. When activated a sequence of flashing LEDs will start to indicate that the unit is powered on.
4. When sequence is completed the green LED will flash every 5 sec under normal operating conditions.

WARNING:
Never heat the condition monitor to temperatures in excess of 100°C | 212°F. Heating to these temperatures could result in death or serious injury.

CAUTION:
Always wear protective gloves. The pump and condition monitor can be hot.

Reset the i-*ALERT*®*2* Equipment Health Monitor

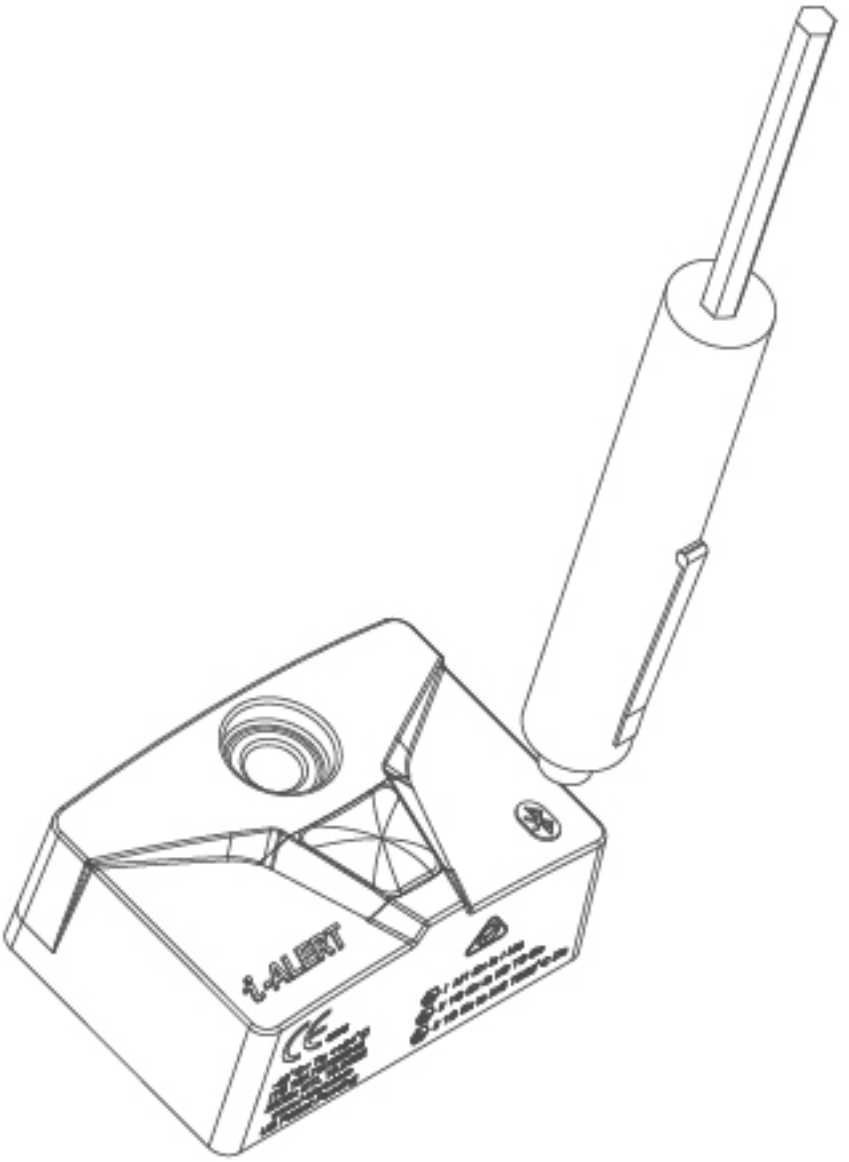

Figure 5: i-*ALERT*®*2* Equipment Health Monitor reset

The LEDs correspond to an i-*ALERT*®*2* Equipment Health monitor function.
When using the magnet over the BlueTooth icon you can change an i-*ALERT*®*2* Equipment Health monitor function. Lifting a magnet off on an LED will

Sequence	LED	When you lift the magnet off
1	Red	Nothing
2	Blue	Bluetooth is turned OFF/ON
3	Green	Unit is shut down
4	After flashing all colors stops	Unit is reset

i-*ALERT*®*2* Equipment Health Monitor routine operation

Measurement interval

The measurement interval for the condition monitor during normal and alarm operation is 5 minutes.

When the monitor measures a reading beyond the specified temperature and vibration limits, the appropriate red LED flashes (after 2 consecutive readings). After the process or pump condition that causes the alarm is corrected, the condition monitor returns to normal mode after one normal-level measurement.

Alarm mode

The condition monitor's alarm mode is activated after two consecutive readings. When the alarm mode is on, you should investigate the cause of the condition and make necessary corrections in a timely manner.

Magnetic device considerations

Be careful when you use magnetic devices in close proximity of the condition monitor, such as magnetic vibration-monitoring probes or dial indicators. These magnetic devices can accidentally activate or deactivate the condition monitor resulting in improper alarm levels or loss of monitoring.

Wireless integration

A Bluetooth Low Energy Radio is utilized to communicate condition monitoring information to a mobile Smart device that the operator can easily view and react to.

Maintenance

Guidelines for i-*ALERT*®*2* Equipment Health Monitor disposal

Precautions

WARNING:

- Never heat the condition monitor to temperatures in excess of 100°C | 212°F. Heating to these temperatures could result in death or serious injury.
- Never dispose of the condition monitor in a fire. This could result in death or serious injury.

Guidelines

This Product Contains Lithium Thionyl Chloride therefore the local Waste management companies can provide assistance in the disposal of the device that contain this type of battery.

Troubleshooting

i-*ALERT*®*2* Equipment Health Monitor troubleshooting

Symptom	Cause	Remedy
There are no red, green, or blue flashing LED.	The battery is dead.	Replace the equipment health monitor.
	The unit is in sleep mode.	Activate the condition monitor using magnet.
	The unit is malfunctioning.	Consult your ITT representative for a warranty replacement.
The red LED is flashing, but the temperature and vibration are at acceptable levels.	The baseline is set below normal operating limits.	Check the temperature and vibration levels and request new baseline. Or manually change alarm limits.
	The unit is malfunctioning.	Consult your ITT representative for a warranty replacement.

For connection issues with smart devices, please visit *www.i-ALERT.com* (page)

For ITT's privacy Policy, click here: *http://itt.com/privacy/* (page)

For User SW License Agreement, click here: *http://www.ittproservices.com/AppPrivacyPolicy* (page)

Visit our website for the latest version of this document and more information:
http://www.i-ALERT2.ittproservices.com

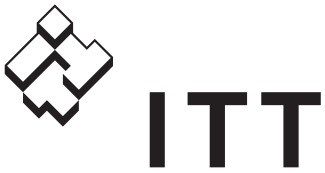

ENGINEERED FOR LIFE

Goulds Pumps Inc.
240 Fall Street
Seneca Falls, NY 13148
USA
Tel. 1-800-446-8537
Fax 1-315-568-2418

© 2016 ITT Corporation
The original instruction is in English. All non-English instructions are translations of the original instruction.

Form IOM.i-ALERT2.en-US.2016-03

SIEMENS

SITRANS F

Electromagnetic flowmeters

SITRANS F M MAG 5000/6000

Operating Instructions

Edition 12/2013

Answers for industry.

SIEMENS

SITRANS F

Flowmeters
SITRANS F M MAG 5000/6000

Operating Instructions

Introduction 1

Safety notes 2

Description 3

Installing/Mounting 4

Connecting 5

Commissioning 6

Functions 7

Alarm, error, and system messages 8

Service and maintenance 9

Troubleshooting/FAQs 10

Technical data 11

Spare parts/Accessories 12

Menu diagrams A

Factory settings B

Approvals/Certificates C

Electromagnetic flow transmitter designed for use with flow sensor types
MAG 1100/1100 F/3100/3100 P/5100 W
Compact and remote installation

12/2013
A5E02338368-002

Legal information

Warning notice system

This manual contains notices you have to observe in order to ensure your personal safety, as well as to prevent damage to property. The notices referring to your personal safety are highlighted in the manual by a safety alert symbol, notices referring only to property damage have no safety alert symbol. These notices shown below are graded according to the degree of danger.

⚠DANGER

indicates that death or severe personal injury **will** result if proper precautions are not taken.

⚠WARNING

indicates that death or severe personal injury **may** result if proper precautions are not taken.

⚠CAUTION

indicates that minor personal injury can result if proper precautions are not taken.

NOTICE

indicates that property damage can result if proper precautions are not taken.

If more than one degree of danger is present, the warning notice representing the highest degree of danger will be used. A notice warning of injury to persons with a safety alert symbol may also include a warning relating to property damage.

Qualified Personnel

The product/system described in this documentation may be operated only by **personnel qualified** for the specific task in accordance with the relevant documentation, in particular its warning notices and safety instructions. Qualified personnel are those who, based on their training and experience, are capable of identifying risks and avoiding potential hazards when working with these products/systems.

Proper use of Siemens products

Note the following:

⚠WARNING

Siemens products may only be used for the applications described in the catalog and in the relevant technical documentation. If products and components from other manufacturers are used, these must be recommended or approved by Siemens. Proper transport, storage, installation, assembly, commissioning, operation and maintenance are required to ensure that the products operate safely and without any problems. The permissible ambient conditions must be complied with. The information in the relevant documentation must be observed.

Trademarks

All names identified by ® are registered trademarks of Siemens AG. The remaining trademarks in this publication may be trademarks whose use by third parties for their own purposes could violate the rights of the owner.

Disclaimer of Liability

We have reviewed the contents of this publication to ensure consistency with the hardware and software described. Since variance cannot be precluded entirely, we cannot guarantee full consistency. However, the information in this publication is reviewed regularly and any necessary corrections are included in subsequent editions.

Siemens AG
Industry Sector
Postfach 48 48
90026 NÜRNBERG
GERMANY

Order number: A5E02338368
℗ 12/2013 Technical data subject to change

Copyright © Siemens AG 2013.
All rights reserved

Table of contents

1 Introduction 7

1.1 Preface 7

1.2 Items supplied 7

1.3 History 8

1.4 Further Information 9

2 Safety notes 11

2.1 Laws and directives 11

2.2 Installation in hazardous location 12

3 Description 15

3.1 System components 15

3.2 Operating principle 15

3.3 Applications 15

3.4 Features 16

3.5 MAG 5000/MAG 6000 versions 17

4 Installing/Mounting 19

4.1 Introduction 19

4.2 Installation conditions 20

4.3 MAG 5000/6000 compact 22

4.4 Remote installation 24

4.5 MAG 5000/6000 CT 28

4.5.1 Installing hardware key 29

4.5.2 Seal device 29

4.5.3 Installation conditions 31

4.5.3.1 MI-001 31

4.5.3.2 PTB K7.2 31

4.6 Turning transmitter/keypad 31

5 Connecting 35

5.1 Electrical connection 36

5.2 Electrical connection PTB K7.2 38

5.3 Connection of add-on modules 38

6 Commissioning 39

6.1 MAG 5000/6000 Blind 39

6.2 Local user interface 40

6.3 Menu structure ... 41
6.4 Changing password ... 42
6.5 Changing basic settings ... 43
6.6 Changing operator menu setup ... 45
6.7 Changing language ... 46
7 Functions ... 47
7.1 Output settings ... 47
7.2 External input ... 49
7.3 Sensor characteristics ... 49
7.4 Reset mode ... 49
7.5 Service mode ... 51
7.6 MAG 5000 CT and MAG 6000 CT settings ... 51
7.7 MAG 6000 SV ... 52
8 Alarm, error, and system messages ... 53
8.1 Diagnostics ... 53
8.2 List of error numbers ... 55
9 Service and maintenance ... 57
9.1 Transmitter check list ... 57
9.2 Technical support ... 58
9.3 Return procedures ... 59
9.4 Recalibration ... 60
10 Troubleshooting/FAQs ... 61
11 Technical data ... 63
11.1 Technical specifications ... 63
11.2 Accuracy ... 66
11.3 Output characteristics ... 68
11.4 Cable data ... 71
11.5 Cable requirements ... 72
12 Spare parts/Accessories ... 73
12.1 Ordering ... 73
12.2 Accessories ... 73
12.3 Spare parts ... 74
12.4 Sun shield ... 74
A Menu diagrams ... 75
A.1 Transmitter menu overview ... 75

A.2 Basic settings 76
A.3 Current output 77
A.4 Digital output - pulse 78
A.5 Digital output - frequency 78
A.6 Error level 78
A.7 Error number 79
A.8 Direction/limit 79
A.9 Batch 79
A.10 External input 80
A.11 Sensor characteristics 81
A.12 Reset mode 82
A.13 Reset mode - MAG 6000 SV 83
A.14 Service mode 84
A.15 Operator menu setup 85
A.16 Product identity 86
A.17 Add-on communication module 87
A.18 Cleaning 87
A.19 MAG 5000/6000 CT menu overview 88
A.20 Change password 89
B Factory settings 91
B.1 Transmitter factory settings 91
B.2 50 Hz Dimension dependent 93
B.3 60 Hz Dimension dependent 94
B.4 50 Hz Dimension dependent batch and pulse output settings 96
B.5 60 Hz Dimension dependent batch and pulse output settings 97
C Approvals/Certificates 99
Index 101

Introduction

1

1.1 Preface

These instructions contain all the information you need for using the device.

The instructions are aimed at persons mechanically installing the device, connecting it electronically, configuring the parameters and commissioning it as well as service and maintenance engineers.

Note

It is the responsibility of the customer that the instructions and directions provided in the manual are read, understood and followed by the relevant personnel before installing the device.

1.2 Items supplied

- SITRANS F M MAG 5000/6000 transmitter
- Calibration report
- SITRANS F literature CD
- Quick start guide

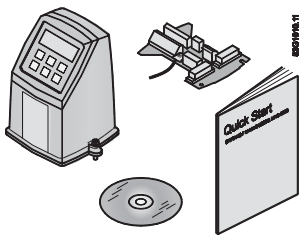

Inspection

1. Check for mechanical damage due to possible improper handling during shipment. All claims for damage are to be made promptly to the shipper.
2. Make sure the scope of delivery, and the information on the type plate corresponds to the ordering information

Device identification

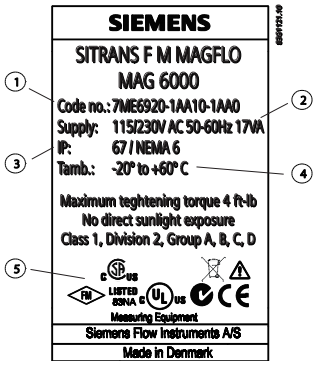

① Code number
② Power supply
③ Enclosure rating
④ Ambient temperature
⑤ Approvals

Figure 1-1 MAG 5000/6000 nameplate

1.3 History

This document describes:

- SITRANS F MAG 5000 and MAG 6000 transmitters (standard version).
- Optional versions:
  - MAG 5000 Blind and MAG 6000 Blind
  - MAG 5000 CT and MAG 6000 CT
  - MAG 6000 SV

Documentation history

The contents of these instructions are regularly reviewed and corrections are included in subsequent editions. We welcome all suggestions for improvement.

The following table shows the most important changes in the documentation compared to each previous edition.

Edition	Remarks	FW version
01 01/2010	First edition	
02 01/2012		4.04
03 12/2013	• Customer defined unit • Velocity value with unit • Operational without SensorProm • EPD for 60 Hz mains	4.07

1.4 Further Information

Product information on the Internet

The Operating Instructions are available on the CD-ROM shipped with the device, and on the Internet on the Siemens homepage, where further information on the range of SITRANS F flowmeters may also be found:

Product information on the internet (http://www.siemens.com/flow)

Worldwide contact person

If you need more information or have particular problems not covered sufficiently by these Operating Instructions, get in touch with your contact person. You can find contact information for your local contact person on the Internet:

Local contact person (http://www.automation.siemens.com/partner)

Safety notes

2

⚠ CAUTION

Correct, reliable operation of the product requires proper transport, storage, positioning and assembly as well as careful operation and maintenance. Only qualified personnel should install or operate this instrument.

Note

Alterations to the product, including opening or improper repairs of the product, are not permitted.

If this requirement is not observed, the CE mark and the manufacturer's warranty will expire.

2.1 Laws and directives

General requirements

Installation of the equipment must comply with national regulations. For example EN 60079-14 for the European Community.

Instrument safety standards

The device has been tested at the factory, based on the safety requirements. In order to maintain this condition over the expected life of the device the requirements described in these Operating Instructions must be observed.

Environmental conditions according to IEC 61010-1 (2001)

- Indoor use
- Altitude up to 2000m
- Maximum relative humidity 80% for temperatures up to 31°C (88°F) decreasing linearly up to 50% relative humidity from 40°C (104°F)
- Main supply voltage fluctuations up to ±10% of the nominal voltage (see technical specifications)
- Overvoltage category II
- Pollution degree 2

CE-marked equipment

The CE mark symbolizes the compliance of the device with the following guidelines:

- EMC-guideline 89/336/EEC
- Low voltage guideline 73/23/EWG
- ATEX Directive 94/9/EG
- CT: (MI-001) Directive 2004/22/EC

2.2 Installation in hazardous location

⚠ WARNING

Equipment used in hazardous locations must be Ex-approved and marked accordingly.

It is required that the special conditions for safe use provided in the manual and in the Ex certificate are followed!

Ex approvals

CSA Class I, Division 2, Groups A, B, C and D. Code T5 for an ambient temperature of +60 °C.

FM Class I, Division 2, Groups A, B, C and D and Class I, Zone 2, Group IIC indoor/outdoor Type IP67 hazardous (classified) locations

Temperature specifications for Ex use

Temperature class	Ambient temperature [°C]		
	-40 to +40	-40 to +50	-40 to +60
T2	180 (process temperature)	-	-
T3	165 (process temperature)	140 (process temperature)	-
T4	100 (process temperature)	100 (process temperature)	80 (process temperature)
T5	65 (process temperature)	65 (process temperature)	65 (process temperature)
T6	50 (process temperature)	50 (process temperature)	50 (process temperature)

EX requirements

It is required that:

- Electrical connections are in accordance with Elex V (VO in explosion hazardous areas) and EN60079-14 (Installing Electrical Systems in Explosion Hazardous Areas).
- The protective cover over the power supply is properly installed. For intrinsically safe circuits the connection area can be opened.

- Appropriate cable connectors are used for the output cicuits: intrinsically safe: blue, non-intrinsically safe: black
- Sensor and transmitter are connected to the potential equalization. For intrinsically safe output circuits potential equalization must be maintained along the entire connection path.
- Sensor insulation thickness is max. 100mm (only insulated sensors).
- EN50281-1-2 is considered for installation in areas with combustible dust.
- When protective earth (PE) is connected, no potential difference between the protective earth (PE) and the potential equalization (PA) can exist, even during a fault condition.

Description

3

3.1 System components

A SITRANS F M MAG 5000/6000 flowmeter system includes:

- Transmitter (type SITRANS F M MAG 5000/6000)
- Sensor (types: SITRANS F MAG 1100/1100F/3100/3100 P/5100 W)
- Communication module (optional) (types: HART, PROFIBUS PA/DP, MODBUS RTU RS 485, Foundation Fieldbus H1, Devicenet)
- SENSORPROM memory unit

Communication solutions

The SITRANS F USM II range of add on modules, presently including HART, Foundation Fieldbus. MODBUS RTU RS 485, PROFIBUS PA / DP and Devicenet, are all applicable with the SITRANS F M MAG 6000 transmitter.

3.2 Operating principle

The transmitters are microprocessor-based with a built-in alphanumeric display in several languages. The flow measuring principle is based on Faraday's law of electromagnetic induction. Magnet coils mounted diametrically on the measuring pipe generate a pulsed electromagnetic field. The liquid flowing through this electromagnetic field induces a voltage.

The transmitters evaluate the signals from the associated electromagnetic sensors, convert the signals into appropriate standard signals such as 4 ... 20 mA, and also fulfil the task of a power supply unit providing the magnet coils with a constant current.

The transmitter consists of a number of function blocks which convert the sensor voltage into flow readings.

3.3 Applications

The pulsed DC-powered magnetic flowmeters are suitable for measuring the flow of almost all electrically conductive liquids, pastes, and slurries with max. 40% solids.

The main applications can be found in the following sectors:

- Water and waste water
- Chemical and pharmaceutical industries
- Food & beverage industry
- Mining and cements industries

- Pulp and paper industry
- Steel industry
- Power generation; utility and chilled water industry

3.4 Features

Power supply

2 different types of power supply are available. A 12 ... 24 V AC/DC and a 115 ... 230 V AC switch mode type.

Coil current module generates a pulsating magnetizing current that drives the coils in the sensor. The current is permanently monitored and corrected. Errors or cable faults are registered by the self-monitoring circuit.

Input circuit amplifies the flow-proportional signal from the electrodes. The input impedance is extremely high: $>10^{14}$ Ω which allows flow measurements on fluids with conductivities as low as 5 µS/cm. Measuring errors due to cable capacitance are eliminated due to active cable screening.

Digital signal processor converts the analog flow signal to a digital signal and suppresses electrode noise through a digital filter. Inaccuracies in the transmitter as a result of long-term drift and temperature drift are monitored and continuously compensated for via the self-monitoring circuit. The analog to digital conversion takes place in an ultra low noise ASIC with 23 bit signal resolution. This has eliminated the need for range switching. The dynamic range of the transmitter is therefore unsurpassed with a turn down ratio of minimum 3000:1.

CAN communication

The transmitter operates internally via an internal CAN communication bus. Signals are transferred through a signal conditioner to the display module and to/from internal/external option modules and the dialog module.

Dialog module

The display unit consists of a 3-line display and a 6-key keypad. The display shows a flow rate or a totalizer value as a primary reading.

Output module

The output module converts flow data to analog, digital and relay outputs. The outputs are galvanically isolated and can be individually set to suit a particular application.

3.5 MAG 5000/MAG 6000 versions

The transmitters are designed in various versions and offer high performance and easy installation, commissioning and maintenance.

Standard version

The standard version is an IP67 version for compact or remote installation. Its robust design ensures a long lifetime if installed outdoors.

Blind version

This version carries all the normal MAG 5000/6000 features, except those associated with the display and keypad.

Both current and digital outputs are available.

Factory setting of current output in unit is switched off when delivered.

CT version

The MAG 5000/6000 CT version is a custody transfer-approved transmitter.

It is approved according to:

- Cold water pattern approval (MAG 5000/6000 CT):
  - OIML R 49
- Cold water pattern approval (MAG 6000 CT only):
  - MI-001
- Hot water pattern approval (MAG 6000 CT only):
- Heat meter pattern approval (MAG 6000 CT only):
  - OIML R 75
- Other media than water (MAG 6000 CT only):
  - OIML R 117

* Energy metering

- PTB K7.2

SV version (MAG 6000 only)

This version is identical to the standard MAG 6000 transmitters except for the following additional functions:

- Zero point adjustment
- Adjustable excitation frequency up to 44 Hz

Installing/Mounting

4

4.1 Introduction

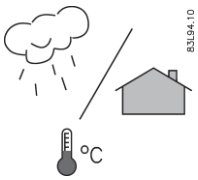

- SITRANS F flowmeters are suitable for indoor and outdoor installations.

WARNING

Installation in hazardous location

Special requirements apply to the location and interconnection of sensor and transmitter. See "Installation in hazardous area"

This chapter describes how to install the flowmeter in the compact version as well as in the remote version.

The transmitter is delivered ready for mounting on the sensor. The transmitter is delivered with a compression plate ready for mounting on the sensor. No further assembling is necessary.

The transmitter can be installed either compact on the sensor or remote.

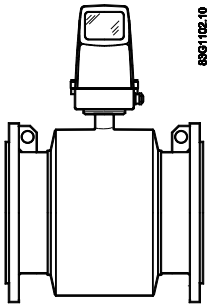

Figure 4-1 Compact installation

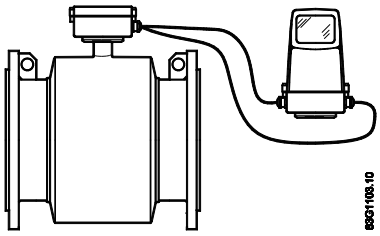

Figure 4-2 Remote installation

CAUTION
See Cable requirements (Page 72) before installing transmitter

4.2 Installation conditions

Reading and operating the flowmeter is possible under almost any installation conditions because the display can be oriented in relation to the sensor. To ensure optimum flow measurement, attention should be paid to the following:

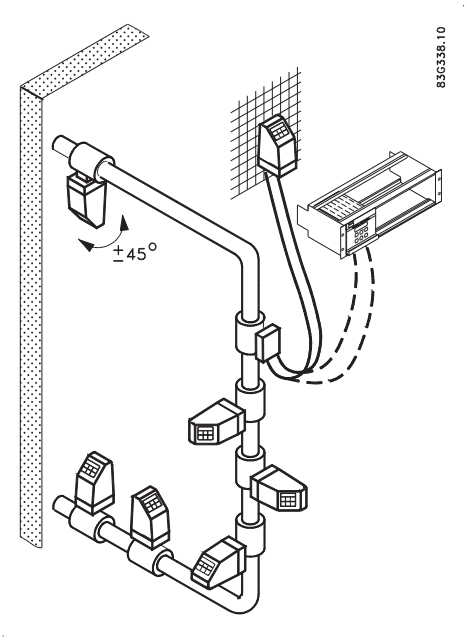

Vibrations

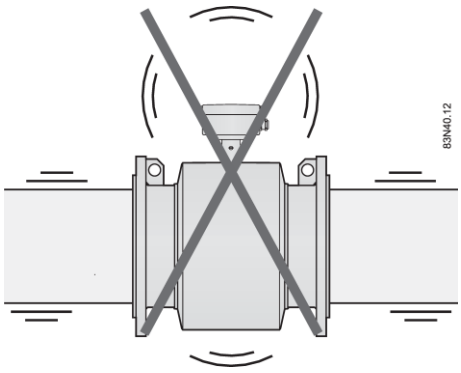

Figure 4-3 Avoid strong vibrations

Compact installation

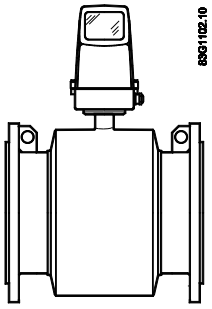

Medium temperature must be in accordance with the graphs showing max. ambient temperature as a function of medium temperature.

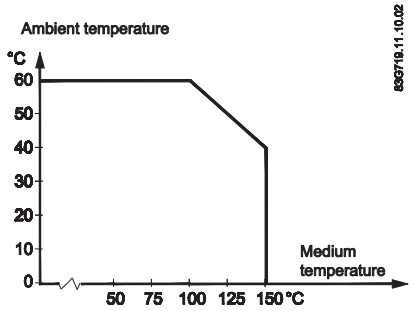

Figure 4-4 Standard, blind and SV versions

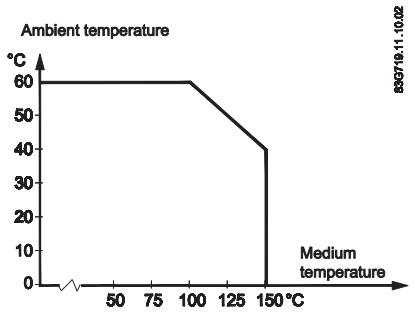

Figure 4-5 CT version

Remote installation

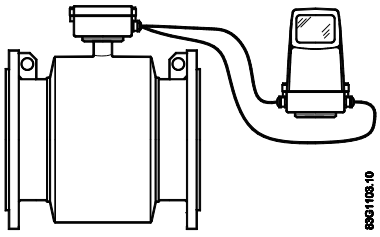

Cable length and type (as described in Cable requirements (Page 72)) must be used.

For installation conditions for sensors, see respective sensor operating instructions.

4.3 MAG 5000/6000 compact

Install MAG 5000 / MAG 6000 compact version

1. Remove and discard terminal box lid of sensor.

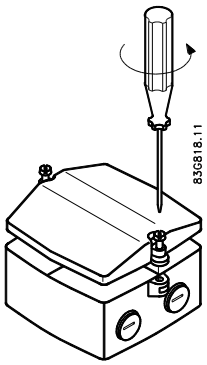

2. Ensure SENSORPROM® memory unit is installed.
3. Fit M20 or ½" NPT cable glands for supply and output cables.
4. Unplug the two black plug assemblies for coil and electrode cables in terminal box.
5. Connect earth wire from connection board to bottom of terminal box.
6. Connect 2-pin connector and 3-pin connector as shown to their corresponding terminal numbers on connection board as shown in Electrical connection (Page 36).

Note

System will not register flow if black plugs are not connected to connection board.

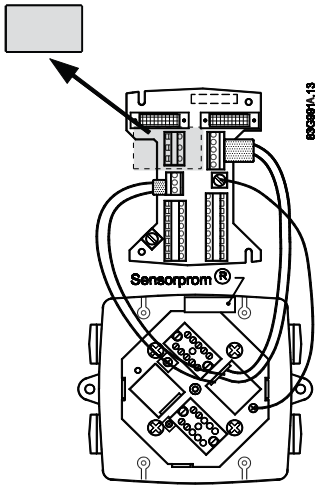

7. Fit supply and output cables through cable glands and connect to connection plate as shown in Electrical connection (Page 36).

8. Mount connection plate in terminal box.

Note

Check that your connection board lines up with SENSORPROM® unit, if not, move SENSORPROM® unit to the other side of terminal box.

SENSORPROM® memory unit connections will be established automatically when connection plate is mounted in terminal box.

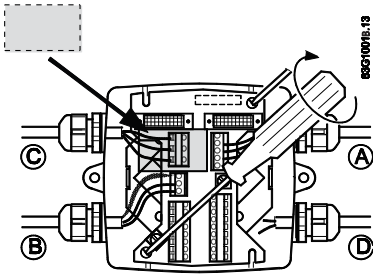

9. Tighten cable glands to obtain optimum sealing.
10. Mount transmitter on terminal box.

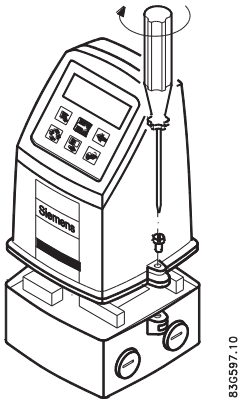

11. Transmitter is ready to be powered up.

NOTICE

Exposing transmitter to direct sunlight may increase operating temperature above its specified limit, and decrease display visibility.

A sunshield is available as accessory.

4.4 Remote installation

At sensor

1. Remove terminal box lid.

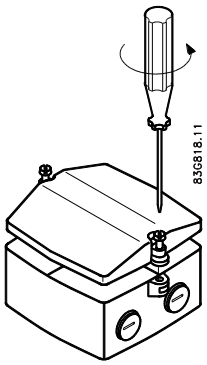

2. Remove SENSORPROM® unit from sensor terminal box and mount it in terminal box of wall mounting unit.

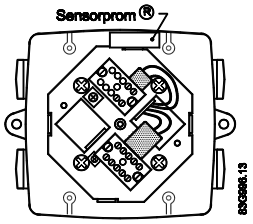

3. Fit M20 or ½" NPT cable glands for cables.

4. Fit and connect electrode (1) and coil (2) cables as shown in Electrical connection (Page 36).

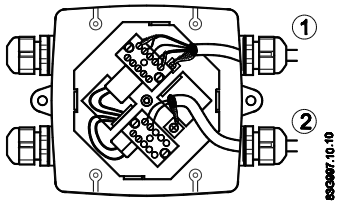

Note

Unscreened cable ends must be kept as short as possible.

Electrode cable and coil cable must be kept separate to prevent interference.

5. Tighten cable glands well to obtain optimum sealing.

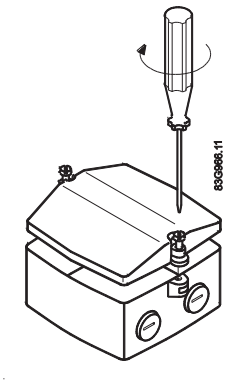

⚠ WARNING

Mount terminal box lid before power up.

Wall mounting

1. Mount bracket on a wall or on a horizontal or a vertical pipe using ordinary hose clips or duct straps.

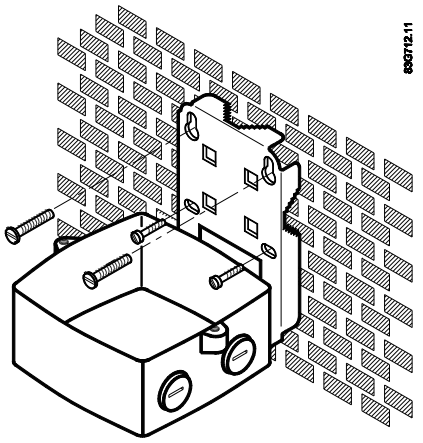

Figure 4-6 Wall mounting

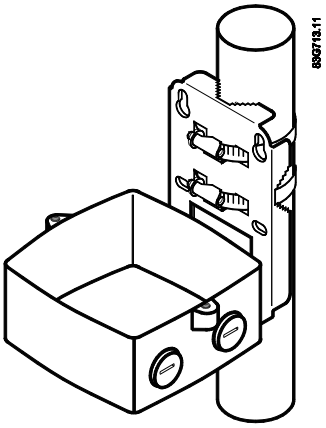

Figure 4-7 Pipe mounting - vertical

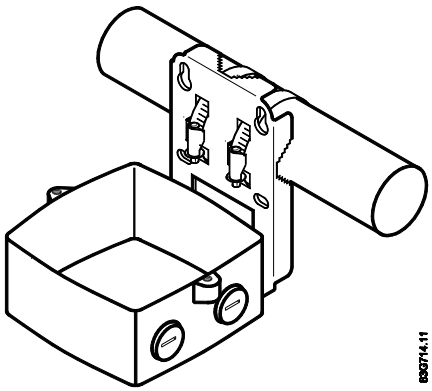

Figure 4-8 Pipe mounting - horizontal

2. Ensure that correct SENSORPROM® memory unit is mounted in wall/pipe mounting unit.

3. Fit M20 or ½" NPT cable glands for cables from bottom or sides of terminal box.
4. Mount earth wire in bottom of terminal box.

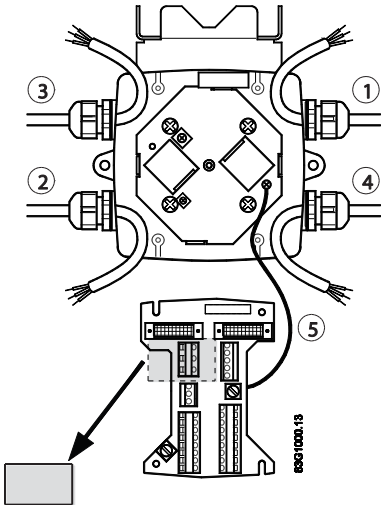

① Connect electrode cable
② Connect coil cable - keep separate from electrode cable
③ Connect power supply
④ Connect output cable
⑤ Connect PE (ground) wire

5. Mount connection plate in terminal box.

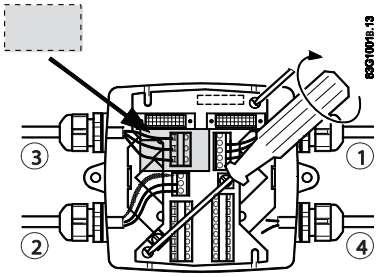

① Electrode cable
② Coil cable
③ Power supply
④ Output cable

6. Fit coil, electrode, supply and output cables through cable glands and connect to connection plate as shown in Electrical connection (Page 36).
7. Fix connection plate with the two diagonally opposite screws.

8. Tighten cable glands to obtain optimum sealing.

⚠ CAUTION
When remote mounted, power supply PE wire must be connected to PE terminal (⏚). Coil cable shield must be connected to SHIELD terminal.

9. Mount transmitter on terminal box.

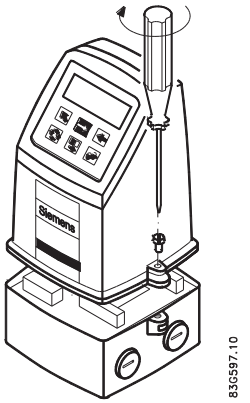

10. Transmitter is ready to be powered up.

NOTICE
Exposing the transmitter to direct sunlight may increase the operating temperature above its specified limit, and decrease display visibility. A sun shield is available as accessory.

4.5 MAG 5000/6000 CT

To ensure that the settings of this custody transfer-approved MAG 5000/6000 CT transmitter are not changed, it is necessary to install a hardware key to lock the software functions and to seal the device.

MAG 6000 CT is installed like a Standard MAG 6000 except for the final sealing.

Calibration sealing has been carried out at calibration.

4.5.1 Installing hardware key

Use hardware key on non-verified transmitter

1. Mount hardware key on transmitter connection plate during setting of primary operating parameters such as $Q_{max.}$, low-flow cut-off, units, approvals, etc. in connection with commissioning or calibration. See setup menus in appendix menu diagrams.

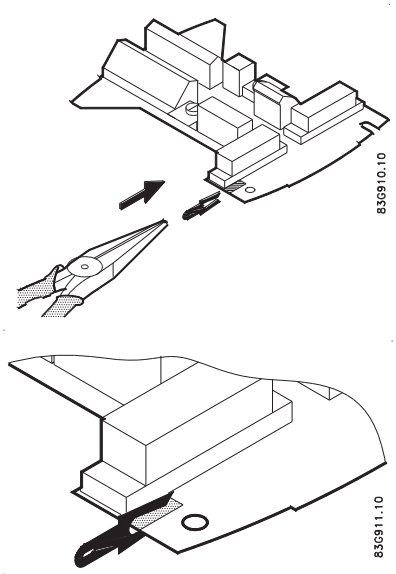

2. Remove hardware key after setting up and calibrating unit.

   This locks the menu structure and the selected settings.

Note

Hardware key function

Setting of primary operating parameters is blocked during normal operation.

When key is mounted, access to all menu items is gained. When key is removed, primary settings are blocked in accordance with requirements in authorisation.

4.5.2 Seal device

Seal transmitter

⚠ CAUTION
Seal transmitter to prevent unauthorized access.

1. Seal connection plate to prevent access to SENSORPROM® memory unit as shown below. 1 indicates sealing locations.

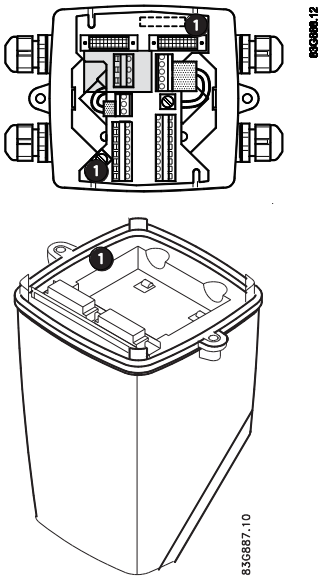

2. Drill through marked drilling holes in terminal box and transmitter/lid. Seal transmitter externally as shown below.

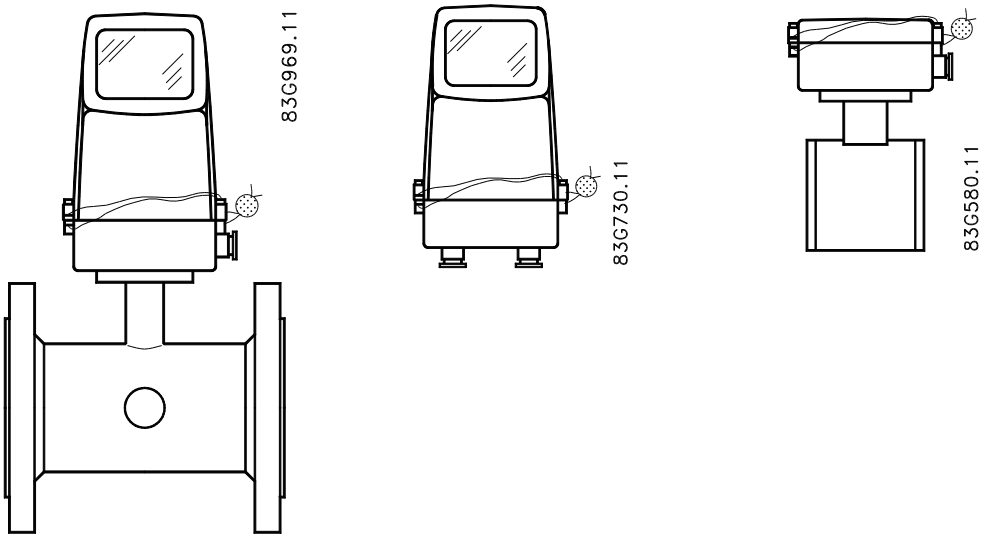

4.5.3 Installation conditions

4.5.3.1 MI-001

MAG 5000/6000 CT together with MAG 5100W (7ME652) are approved for Mi-001 under the following installation conditions.

- DN 50 to 300 mm (2" to 12")
- Horizontal installation
- Compact or remote with max. 3 m cable
- Power supply 115/230 V AC

Other restrictions may apply (see certificate).

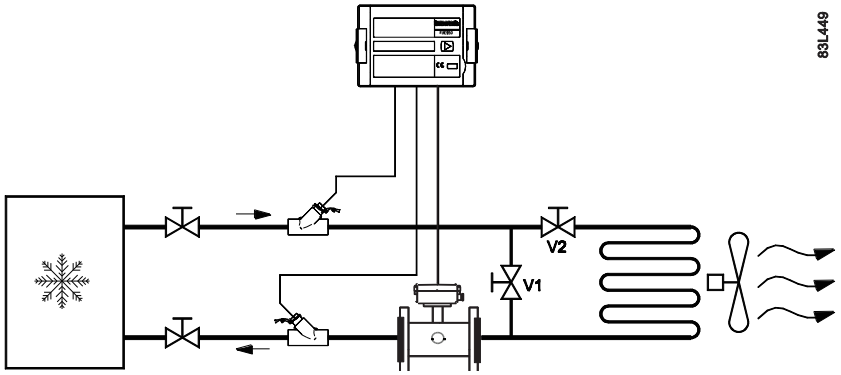

4.5.3.2 PTB K7.2

MAG 5000/6000 CT together with MAG 5100W (7ME652) are approved for PTB K7.2 under the following installation conditions.

SITRANS F M MAG 5100 W with MAG 5000/6000CT

- DN 50 to 300 mm (2" to 12")
- Horizontal installation
- Compact or remote with max. 10 m (33 ft.) cable

Other restrictions may apply (see certificate 22.76/10.02)

**insert installation conditions as pasted

4.6 Turning transmitter/keypad

It is possible to alter the standard assembly, e.g. to turn transmitter or keypad.

Transmitter

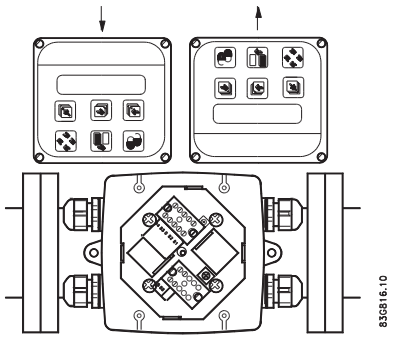

Figure 4-9 Transmitter can be mounted with its front in either direction indicated by the arrows without turning terminal box

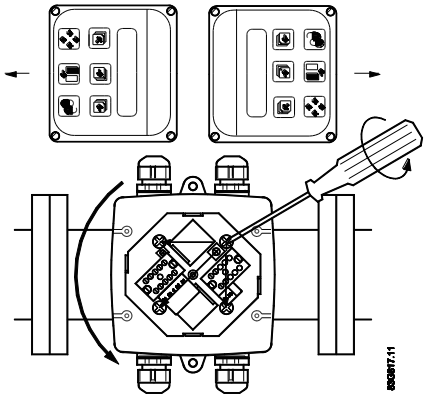

Figure 4-10 Terminal box can be rotated ±90° in order to optimize viewing angle of transmitter display/keypad

1. Unscrew the four screws in bottom of terminal box.
2. Turn terminal box to required position.
3. Retighten screws firmly.

Keypad

1. Remove outer frame using a screwdriver.

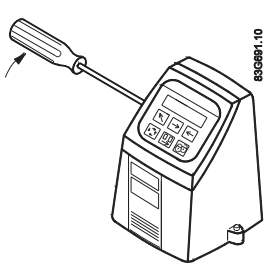

2. Loosen the four screws retaining keypad.

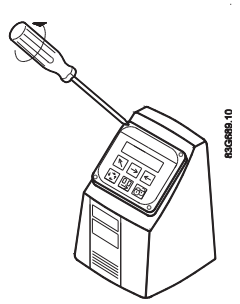

3. Withdraw keypad and turn it to required orientation.

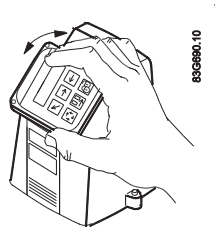

4. Tighten the four screws until a mechanical stop is felt in order to obtain IP67 enclosure.

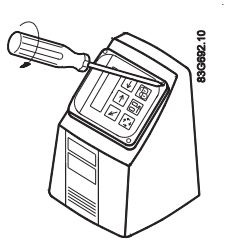

5. Snaplock outer frame onto keypad (click).

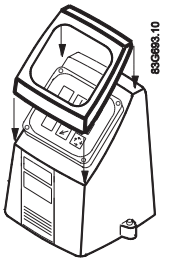

Connecting

5

⚠ WARNING

Mains supply from building installation Class II

A switch or circuit breaker (Max. 15 A) must be installed in close proximity to the equipment and within easy reach of the operator. It must be marked as the disconnecting device for the equipment.

⚠ WARNING

Protective conductor terminal

The required cable is min. AGW16 or 1.5 Cu.

⚠ WARNING

Wire insulation

The insulation between the connected mains supply and 24 V AC/DC supply for the flowmeter must at least be rated with double or reinforced insulation at mains voltage.

For field wiring installation: Ensure that the **National Installation Code** of the country in which the flowmeters are installed is met.

Note

National installation code

Observe country specific installation directives for field wiring.

5.1 Electrical connection

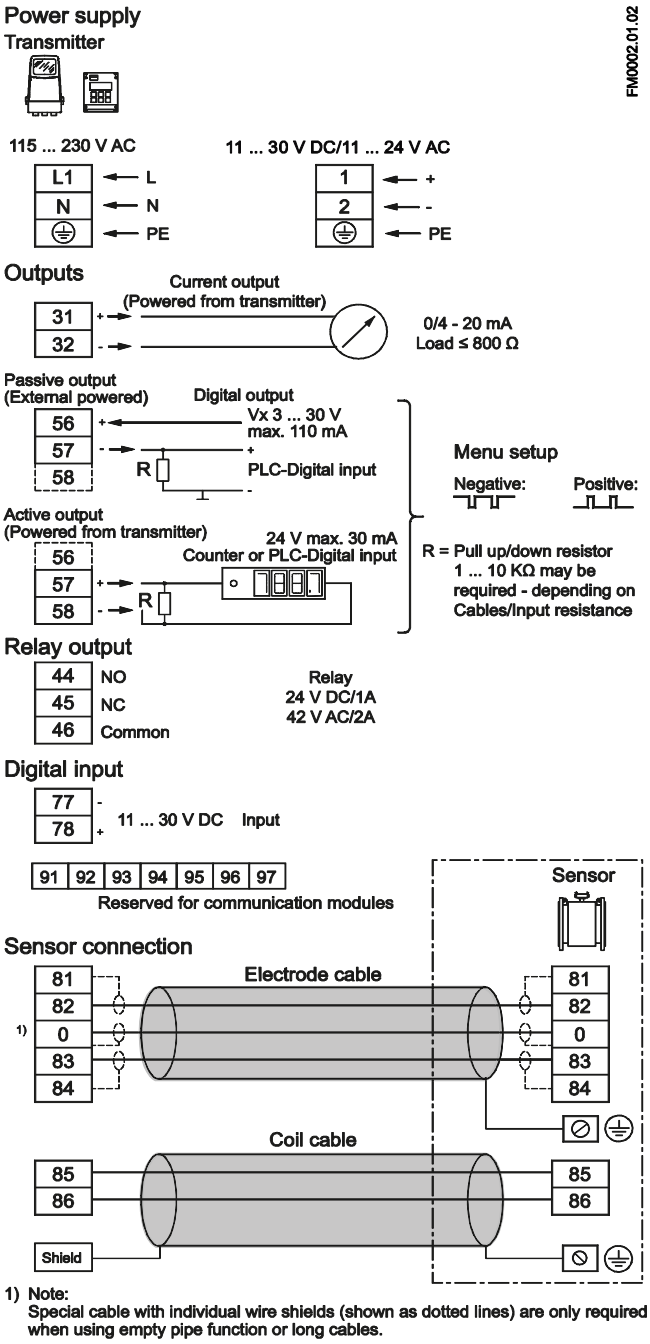

Figure 5-1 Wiring diagram

Note

Terminals 81 and 84 are only to be connected if special electrode cable with double screening is used, e.g. when empty pipe function or long cables are used.

Mains supply

Mains supply 115 ... 230 V AC from building installation Class II.

Note

For DC installations it is recommend to install an under voltage relay or protection circuit in the application where there is a risk of low power supply below the specifications for more than 10 minutes.

⚠ WARNING

Grounding

Connect mains protective earth wire to PE terminal in accordance with diagram (due to class 1 power supply).

Mechanical counter

Connect a 1000 µF capacitor (capacitor+ to terminal 56 and capacitor- to terminal 58) if a mechanical counter is connected to terminals 57 and 58 (active output).

Output cables

Use screened cables if long cables are used in noisy environments.

Digital output

If internal resistance of a load exceeds 10 kΩ, connect an external 10 kΩ load resistor in parallel to this load.

⚠ WARNING

Intrinsically safe terminals

Always ensure that distance between cables/wires is **minimum 50 mm** in order to avoid that wires/terminals of intrinsically safe circuits get into contact with wires of other cables.

Fasten cables/wires in a way that they **cannot** get into contact with each other, not even in case of an error. Keep wire ends as short as possible.

5.2 Electrical connection PTB K7.2

Additional Electrical connection for PTB K7.2 approved MAG5000/6000 with MAG5100W (7ME652)

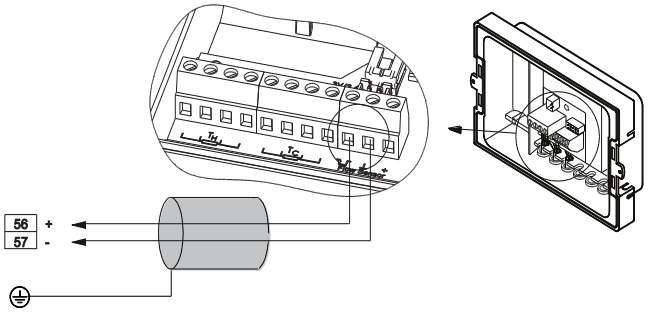

5.3 Connection of add-on modules

When the add-on module has been installed, the electrical connections are available on terminal rows 91-97.

For more information

Refer to the relevant BUS communication Quick Start or Operating Instructions available at the SITRANS F literature CD or on the internet, at : www.siemens.com/flowdocumentation (www.siemens.com/flowdocumentation).

Commissioning

6

In this chapter it is described how to commission the device via the local user interface (LUI).

The display is described in details in section Local user interface (Page 40).

Furthermore, the following functions are described in details:

- Changing password (Page 42)
- Changing basic settings (Page 43)
- Changing operator menu setup (Page 45)
- Changing language (Page 46)

Detailed diagrams concerning the specific menu are shown in appendix menu diagrams.

For factory settings, see Factory settings.

6.1 MAG 5000/6000 Blind

Note

Does not have a display. All factory settings will be uploaded from the SENSORPROM® unit after power-up.

For sensor dependent factory settings, see Appendix B.

Changing settings

If other settings are required, a standard transmitter with display and similar power supply can be used.

1. Unscrew and remove MAG 5000/6000 Blind.
2. Mount standard MAG 5000/6000 transmitter.
3. Change required settings via display and keypad.

   All changed data will be stored in SENSORPROM® memory unit.
4. Remove standard transmitter and remount Blind transmitter.
5. Fasten screws holding transmitter.

New settings stored in SENSORPROM® memory unit will be uploaded in blind transmitter.

6.2 Local user interface

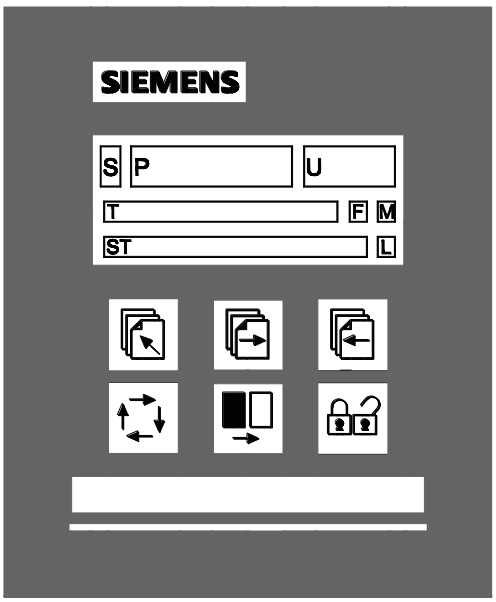

S Sign field

P Primary field for numeric value flow rate, Totalizer 1 or Totalizer 2)

U Unit field

T Title line with individual information according to operator or setup menu selected.

ST Subtitle line which will either add information to the title line or keep individual information independent of the title line.

F Alarm field. Two flashing triangles will appear in case of a fault condition.

M Mode field

L Lock field

Figure 6-1 Local User Interface

Mode field symbols

Communication mode	Language mode	Sensor characteristics
Service mode	Basic settings	Reset mode
Operator menu	Output	Operator-active
Product identity	External input	Operator-inactive

Lock field symbols

	Ready for change		Access to submenu
	Value locked		RESET MODE: Zero setting of totalizers and initialization of setting

Keypad

The keypad is used to set the flowmeter. The keys function as follows:

TOP UP KEY		This key (when held for 2 sec.) is used to switch between operator menu and setup menu. In transmitter setup menu, a short press will cause a return to previous level.
FORWARD KEY		This key is used to step forward through the menus. It is the only key normally used by the operator.
BACKWARD KEY		This key is used to step backwards through the menus.
CHANGE KEY		With this key settings or numerical values are changed.
SELECT KEY		With this key figures to be changed are selected.
LOCK/UNLOCK KEY		This key enables the operator to change settings and it gives access to submenus.

6.3 Menu structure

The menu is built up of two parts. An **operator menu** and a **setup menu**, see also overview diagrams MAG 5000/6000 and MAG 5000/6000 CT.

Operator menu

The operator menu is for daily operation. It is customized in the operator menu setup. The transmitter always starts up in operator menu No. 1. The forward and the backward keys are used to step through the operator menus.

Setup menu

The setup menu is for commissioning and service only. Access to the setup menu is gained by pressing the top up key for 2 seconds. The setup menu operates in two modes:

- View mode
- Setup mode

View mode is a read-only mode. The pre-selected settings can only be scanned.

Setup mode is a read and write mode. The pre-selected settings can be scanned and changed. Access to the setup mode is password-protected. The factory set password is 1000.

Access to a submenu in the setup menu is gained by pressing the lock key. Press the top up key briefly to return to the previous menu. Press longer (2 sec.) to exit the setup menu and return to operator menu No. 1.

6.4 Changing password

The setup menu is password-protected in order to ensure that only authorized personnel can make any changes in transmitter settings.

Change password as follows:

1. Press top up key for 2 sec.
2. Enter password.
3. Use forward key or backward key to reach password menu.
4. Press lock/unlock key to unlock password.
5. Use select key and change key to change password.
6. Press lock/unlock key to confirm new password.
7. Press top up key two times to exit setup mode.

See change password diagram.

The factory-set password is 1000, but it can be changed to any value between 1000 and 9999.

Factory setting of password can be re-established as follows:

1. Switch off power supply.
2. While pressing top up key - switch on power supply.
3. Release top up key after 10 sec.

6.5 Changing basic settings

In the basic settings menu it is possible to set the following parameters:

Parameter	Description
Main frequency	Selection of main power supply frequency corresponding to the country in which the flowmeter is installed (e.g. 60 Hz in America).
Flow direction	Selection of correct flow direction in pipe.
Customer units	Setting of user defined volume and time units.
Q_{max}	Setting of measuring range, analog outputs and frequency output. Also individual dimension-dependent setting of value, decimal point, unit and time.
Q_{max} 2	Setting of measuring range, analog outputs and frequency output. Also individual dimension-dependent setting of value, decimal point, unit and time. This menu is only visible if chosen as external digital input.
Totalizer	Setting of unit and decimal point.
Low flow cut-off	Setting of a percentage of selected Q_{max}. This filters noise in installation reducing fluctuations in display and all outputs.
Empty pipe cut-off	When set to "On" the alarm will indicate when sensor is running empty. All readings, display and outputs, will indicate zero.
Velocity unit	Setting of velocity unit per time unit
Error level	Selecting error level at which flowmeter will detect an error.

Note

Totalizer 2 is not visible when batch is selected as digital output.

Note

Q_{max} 2 is visible only when chosen as digital input.

Change basic settings as follows:

1. Press top up key for 2 sec.
2. Enter password.
3. Use forward key to reach basic settings menu.
4. Press lock/unlock key to unlock settings.
5. Use forward key or backward key to reach relevant menu.
6. Press lock/unlock key to unlock settings.
7. Use select key and change key to change settings.
8. Press lock/unlock key to confirm new settings.

9. Repeat steps 5-8 to change other settings.
10. Press top up key ⇱ two times to exit setup mode.

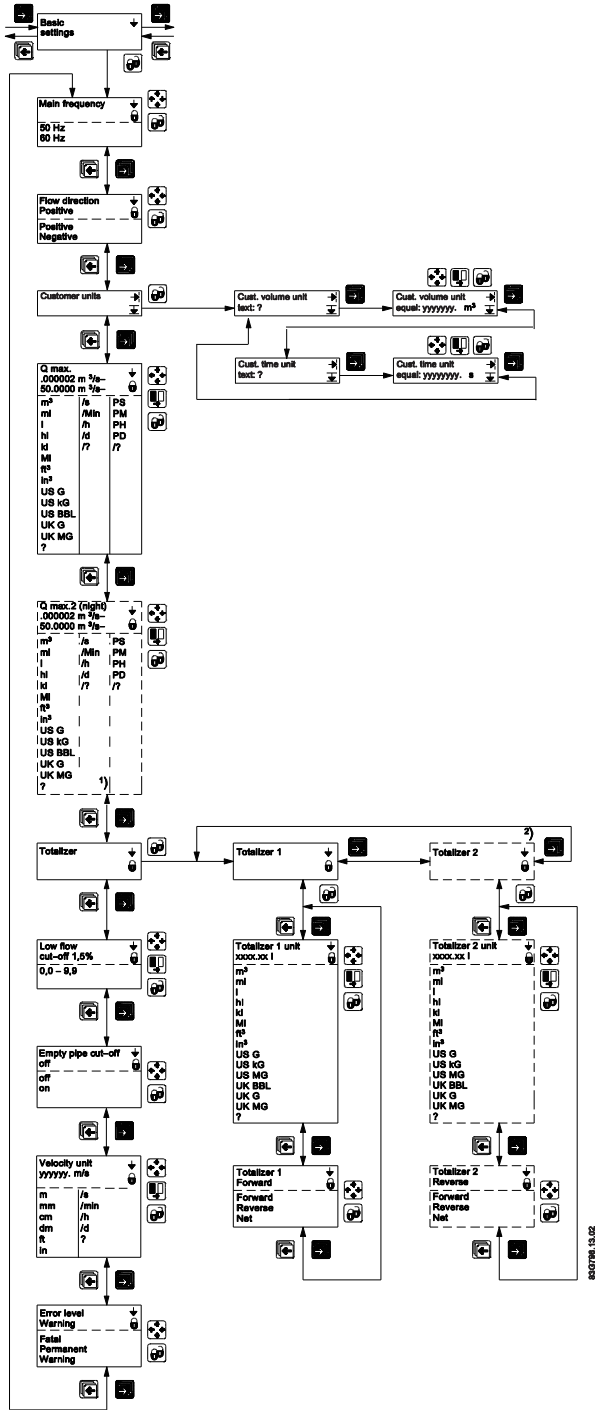

Decimal point can be positioned and units set individually for flow rate in totalizer 1 and totalizer 2.

Changing decimal point position

1. Enter the respective totalizer menu.
2. Use select key to position cursor below decimal point.
3. Use change key to move decimal point to requested position.

Changing units

1. Use select key to position cursor below unit.
2. Press change key until requested unit is displayed.

6.6 Changing operator menu setup

In the operator menu the menus required for daily operation of the flowmeter are shown. It is possible to hide and change some of the menus in the operator menu. This is done in the operator menu setup menu, see operator menu setup diagram.

Customizing menus in operator menu

To customize the menus in the operator menu perform the following steps:

1. Press top up key for 2 sec.
2. Enter password.
3. Use forward key or backward key to reach operator menu.

Changing text in line 1

1. Press lock/unlock key to unlock setting.
2. Use change key to select desired text.
3. Press lock/unlock key to confirm selected text.

Note

If "Text" is selected in line 2, this line functions as a heading for the value shown in line 3. Otherwise it shows the actual value of the reading selected.

Enabling two readings

1. Use forward key to reach requested menu.
2. Press lock/unlock key to unlock setting.
3. Use select key to move cursor to upper line.
4. Use change key to select requested reading.
5. Press lock/unlock key to confirm selection.

6. Use select key to move cursor to line 3.
7. Use change key to select desired setting.
8. Press lock/unlock key to confirm new setting.
9. Repeat steps 1-8 for each requested menu.

Showing/hiding menus in operator menu

1. Use forward key to reach requested menu.
2. Press lock/unlock key to unlock setting.
3. Use select key to move cursor to √/÷ symbol.
4. Press change key to select visible (√) or hidden (÷).
5. Press lock/unlock key to confirm new setting.

6.7 Changing language

It is possible to change language in transmitter. Default language is English, but it can be changed to various other languages.

Change language as follows:

1. Press top up key for 2 sec.
2. Enter password.
3. Use forward key or backward key to reach language menu.
4. Press lock/unlock key to unlock language.
5. Use change key to select desired language.
6. Press lock/unlock key to confirm new language.
7. Press top up key two times to exit setup mode.

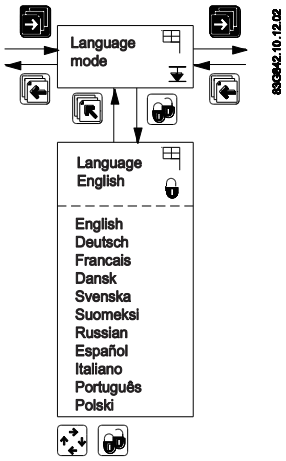

Functions

7

This chapter describes the various menus of the transmitter in details. The menu diagrams are shown in appendix menu diagrams.

7.1 Output settings

Three outputs are available:

- Current output (range and time constant); terminals 31 and 32.
- Digital output (pulse, frequency, error, limit, or batch settings); terminals 56, 57, and 58.
- Relay output (error, limit, and batch settings); terminals 44, 45, and 46.

Current output

In the current output menu it is possible to select current output direction, range and time constant, see also Current output menu diagram.

If current output "4-20 mA + Alarm" is selected, then alarm level and alarm differentiation may also be defined.

"Alarm level" defines if an alarm should be above 21 mA "High" or below 3.6 mA "Low".

"Alarm diff." defines whether or not the alarm should vary according to selected error level. Error level "Fatal". "Permanent" or "Warning" is selected in "Basic settings".

If Alarm differentiation is set to "Yes", depending on the Alarm level setting, the current output will show:

Alarm level	Output / Error level		
	Fatal	Permanent	Warning
Low	1.3 mA	2 mA	3 mA
High	23 mA	22 mA	21.5 mA

If Alarm differentiation is set to "No", depending on the Alarm level setting, the current output will show:

Alarm level	Output
Low	3.5 mA
High	22.6 mA

For setting of error level, see Error level menu diagram.

If current output is not used, it must be set to "Off".

Digital output

Digital output can be used to configure various settings:

- Pulse (volume/pulse, pulse output, pulse width, pulse polarity, and time constant), see pulse menu diagram.
- Frequency (frequency output, max frequency, and time constant), see frequency menu diagram.
- Error settings (level and number), see error level menu diagram and error number menu diagram.
- Limit settings (number of setpoints, setpoint settings, and hysteresis), see direction/limit menu diagram.
- Batch settings (quantity, time and counter settings, and time constant), see batch menu diagram.

Note

Batch settings

Only MAG 6000.

Not available in MAG 5000, MAG 5000 CT and MAG 6000 CT.

Note

When relay is set to batch function, pulse/frequency is not available on digital output.

Relay outputs

Relay output can be used to configure various settings:

- Error settings (level and number), see error level menu diagram and error number menu diagram.
- Limit settings (number of setpoints, setpoint settings, and hysteresis), see direction/limit menu diagram.
- Batch settings (quantity, time and counter settings, and time constant), see batch menu diagram.
- Cleaning (cycle time), see cleaning menu diagram.

Note

Batch settings

Only MAG 6000.

Not available in MAG 5000, MAG 5000 CT and MAG 6000 CT.

Note

Cleaning

If a cleaning unit is installed together with transmitter, relay output must **always** be used to operate this unit. It cannot be used for other purposes.

7.2 External input

By applying 11 … 30 V DC to terminals 77 and 78, it is possible to perform:

- Batch control (start, stop, hold/continue)
- Reset totalizer
- Force/freeze output
- Q_{max} 2 (night)

See external input menu diagram.

Note

Batch settings

Only MAG 6000.

Not available in MAG 5000, MAG 5000 CT and MAG 6000 CT.

Note

Manual cleaning

If the digital input is used for manual cleaning, the relay output also automatically changes to "cleaning".

7.3 Sensor characteristics

The sensor characteristics menu shows:

- If a SENSORPROM® is installed or not.
- Suppress error P 40 (SENSORPROM® not installed)
- Sensor size.
- Calibration factor.
- Correction factor.
- Excitation.

See also sensor characteristics menu diagram.

7.4 Reset mode

The reset mode is used for resetting totalizers/counters or for restoring MAG 5000/6000 to its factory settings.

Resetting

1. Press top up key for 2 sec.
2. Enter password.
3. Use forward key or backward key to reach reset mode menu.
4. Press lock/unlock key to enter reset menu.
5. Press forward key to reach totalizer/counter to be reset or default setting menu.
6. Press lock/unlock key to start resetting.

If restoring of factory settings is required:

1. Press lock/unlock key again to confirm destruction of customized settings.

See also reset menu diagram.

Zero point adjustment (MAG 6000 SV only)

Auto adjustment

Before auto zero point adjustment is carried out ensure that valves to and from flowmeter are completely closed and that flow velocity in sensor is zero.

1. Press top up key for 2 sec.
2. Enter password.
3. Use forward key or backward key to reach reset mode menu.
4. Press lock/unlock key to enter reset menu.
5. Press forward key to reach zero adjust menu.
6. Press lock/unlock key to enter the menu.
7. Use change key to select "auto".
8. Press forward key to view actual offset (lower line in display). Value will be zero after adjustment has been performed.
9. Press lock/unlock key to start adjustment.

Manual adjustment.

1. Press top up key for 2 sec.
2. Enter password.
3. Use forward key or backward key to reach reset mode menu.
4. Press lock/unlock key to enter reset menu.
5. Press forward key to reach zero adjust menu.
6. Press lock/unlock key to enter the menu.
7. Use change key to select "manual".

8. Press forward key and then select key and change key to key in offset value.
9. Press lock/unlock key to start adjustment.

Zero point can be adjusted manually in range -1.000 ... +1.000 m^3/s. If value outside this range is keyed in, zero point adjustment will not be implemented.

See also reset mode menu diagram (MAG 6000 SV).

7.5 Service mode

All outputs of the transmitter can be forced-controlled in the service mode menu, see also service mode menu diagram.

Here it is possible to check whether e.g. the current output is functioning.

Error pending and status log lists are also accessible from this menu and the operating time (in days) can be read.

The forced control is cut off and all previous settings are reinitialized the moment the service mode is left by pressing top up key .

7.6 MAG 5000 CT and MAG 6000 CT settings

Internal totallizers

Depending on the type of approval it is possible to reset the internal totalizers. The type of approval is selected in the reset menu with the hardware key mounted. It is possible to choose between:

- Hot/cold water
- Other liquids

Resetting of totalizers by electrical input is not possible.

Hot/cold water

- Totalizer 1 is allocated to forward flow (cannot be reset)
- Totalizer 2 is allocated to reverse flow (cannot be reset)

Other liquids

Both totalizer 1 and totalizer 2 are allocated to measure the net flow, i.e. any reverse flow will make the totalizers count backwards.

- Totalizer 1 cannot be reset.
- Totalizer 2 can be reset if the flow velocity in the meter pipe is <0.25 m/s. When the totalizer is reset, the pulse output register will also be reset.

Output

- When choosing hot water, changing the output settings is not allowed and the output setting menus are not shown in display.
- When choosing cold water or other liquids, all output settings can be changed.

7.7 MAG 6000 SV

Excitation frequency

The MAG 6000 SV excitation frequency can be changed in sensor characteristics menu to one of the following frequencies:

- 1 $^{9}/_{16}$ Hz
- 3 $^{1}/_{8}$ Hz
- 6 ¼ Hz
- 12½ Hz
- 25 Hz
- 44 Hz

Note

Calibration has been made with the frequency stored in SENSORPROM® memory unit. A change in excitation frequency is not recommended and will always mean decreased measuring accuracy. In some instances, however, it may be necessary to change frequency due to pulsating flow from piston pumps or other resonance frequencies from surroundings.

It is highly recommended to carry out a External input (Page 49) after changing the excitation frequency as the offset is affected by the frequency selected. When this is done, the decrease in measuring accuracy can be kept below 1% o.r.

A too high frequency for the sensor used will cause a coil current alarm indication.

Alarm, error, and system messages

8

8.1 Diagnostics

Error system

Transmitter system is equipped with an error and status log system with 4 groups of information.

(**I**) Information - system will continue to measure as normal, relay and current outputs will not be affected.

(**W**) Warning - system will continue to measure, but an event that may cause a system malfunction and require operator attention has occurred. The cause of the error may disappear on its own.

(**P**) Permanent error - may cause malfunction in the application and operator attention is required.

(**F**) Fatal error - is essential for the operation of the flowmeter. Immediate operator attention is required.

Two menus are available in service and operator menus for registration of information and errors.

- Error pending
- Status log

Note

Registration of errors in different modes

- In setup mode (local dialog) errors are entered only to Error pending list and not to Error log list, and not registered on physical outputs (current or relay).
- In service mode errors are entered to both Error pending and Error log lists, but not registered on physical outputs (current or relay).

Note

Power-off

Both error pending and status logs are reset at power-off.

Error pending

The first 9 pending errors are stored in the error pending list. When the error is corrected, it is removed from the error pending list.

The acceptance level for "error pending" can be individually configured to a particular application.

The acceptance level is set in the basic settings menu (Page 43).

Acceptance levels

The following three acceptance levels are selectable.

- Fatal error: Only fatal errors are registered as errors
- Permanent error: Permanent and fatal errors are registered as errors
- Warning (Default value): Warnings, permanent and fatal errors are registered as errors

Error information is displayed in title and subtitle lines, see display layout (Page 40). Title line will show time since occurrence of error in days, hours and minutes. Subtitle line will flash between an error text and a remedy text. Error text will indicate type of error (I, W, P or F), error number, and error text. Remedy text will inform operator of action to take to remove error.

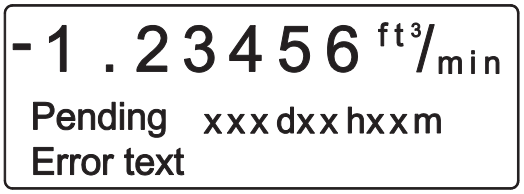

Status log

The latest 9 errors are stored in the status log. Errors are stored in the status log for 180 days, even if they are corrected.

Alarm field

The alarm field on the display will always flash when an error is pending.

Error output

The digital and relay output can be activated individually error by error (error level). The relay output is default selected to error level. An output can also be selected to activate on a single error number.

The alarm field, error output and error pending always operate together.

Operator menu

Error pending and status log are as default enabled (√) in the operator menu.

8.2 List of error numbers

Error No.	*Error text* Remedy text	Comment	Output status	Input status
1	*I1 - Power on* OK	Device powered on	Active	Active
2	*I2 - Add-on module* Applied	A new module has been applied to the system	Active	Active
3	*I3 - Add-on module* Install	An add-on module is defect or has been removed. This can be an internal add-on module	Active	Active
4	*I4 - Param. corrected* OK	A less vital parameter in the transmitter has been replaced by its default value	Active	Active
20	*W20 - Totalizer 1* Reset manually	During initialisation the check of the saved totalizer value has failed. It is not possible to rely on the saved totalizer value anymore. The totalizer value must be reset manually in order to rely on future readings	Active	Active
20	*W20 - Totalizer 2* Reset manually	During initialisation the check of the saved totalizer value has failed. It is not possible to rely on the saved totalizer value anymore. The totalizer value must be reset manually in order to rely on future readings	Active	Active
21	*W21 - Pulse overflow* Adj. pulse settings	Actual flow is too big compared with pulse width and volume/pulse	Reduced pulse width	Active
22	*W22 - Batch timeout* Check installation	Duration of batching has exceeded a predefined maximum time	Batch output on zero	Active
23	*W23 - Batch overrun* Check installation	Batch volume has exceeded a predefined maximum overrun volume	Batch output on zero	Active
24	*W24 - Batch neg. flow* Check flow direction	Negative flow direction during batch	Active	Active
30	*W30 - Overflow* Adj. Q_{max}	Flow is above Q_{max} settings	Max. 120 %	Active
31	*W31 - Empty pipe*	Pipe is empty	Zero	Active
40	*P40 - SENSORPROM®* Insert/change	SENSORPROM® unit not installed	Active	Active
41	*P41 - Parameter range* Switch off and on	A parameter is out of range. The parameter could not be replaced by its default value. The error will disappear at the next power-on	Active	Active

Error No.	*Error text* Remedy text	Comment	Output status	Input status
42	*P42 - Current output* Check cables	Current loop is disconnected or the loop resistance is too big	Active	Active
43	*P43 - Internal error* Switch off and on	Too many errors occurred at the same time. Some errors are not detected correctly	Active	Active
44	*P44 - CT SENSORPROM®*	SENSORPROM® unit has been used as CT version	Active	Active
60	*F60 - CAN comm. error* Transmitter/AOM	CAN bus communication error. An add-on module, the display module or the transmitter is defective	Zero	Inactive
61	*F60 - SENSORPROM® error* Replace	It is not possible to rely on the data in SENSORPROM® unit anymore	Active	Active
62	*F62 - SENSORPROM® ID* Replace	The SENSORPROM® unit ID does not comply with the product ID. The SENSORPROM® unit is from another type of product SITRANS F C, SITRANS F US etc.	Zero	Inactive
63	*F63 - SENSORPROM®* Replace	It is not possible to read from the SENSORPROM® unit anymore	Active	Active
70	*F70 - Coil current* Check cables	Coil excitation has failed	Active	Active
71	*F71 - Internal error* Replace transmitter	Internal convertion error in ASIC	Active	Active

Service and maintenance

9

The device is maintenance-free, however, a periodic inspection according pertinent directives and regulations must be carried out.

An inspection can include check of:

- Ambient conditions
- Seal integrity of the process connections, cable entries, and cover screws
- Reliability of power supply, lightning protection, and grounds

Under ideal conditions the flowmeter will operate continuously with no manual adjustment or intervention required.

The SITRANS F M Verificator is an external tool developed for verifying the MAG 5000/6000 system, installation, and application. It is a highly advanced instrument, which carries out the complex verification of the entire flowmeter system according to unique SIEMENS patented principles. The verification test is automated and the instrument easy to use, so no human error or influence will affect the verification.

9.1 Transmitter check list

If unstable/wrong measurements occur, it is often due to insufficient/wrong earthing or potential equalization. If earthing connection is OK, check transmitter as described below, and sensor as described in sensor check lists (see the respective operating instructions).

The easiest way to check the transmitter in a SITRANS F M installation is to replace the transmitter with another MAG 5000/6000 with a similar power supply.

As all settings are stored in and downloaded from the SENSORPROM®, replacement is easily done and no extra settings need to be made.

Check transmitter

If no replacement transmitter is available, check transmitter according to the following check table.

Power on transmitter		
0	Display light on?	Yes ⇒ 1
		No ⇒ 2
1	Flashing error triangles?	Yes ⇒ Check error table
		No ⇒ 1.2
1.2	Output and display readings OK?	Yes ⇒ 1.2.1
		No ⇒ 1.2.2

Power on transmitter		
1.2.1	Transmitter OK	Check application Check installation/sensor/earthing connection etc.
1.2.2	Check cables/conndections Check connection board Check pins in transmitter multiplug	OK ⇒ 1.2.1
		Not OK ⇒ correct fault
2	Check cables/conndections Check connection board Check pins in transmitter multiplug	OK ⇒ 2.1
		Not OK ⇒ Correct fault
2.1	Output readings OK?	Yes ⇒ 2.1.1
		No ⇒ 2.1.2.
2.1.1	Dispaly defective	Replace display
2.1.2	Transmitter defective	Replace transmitter

Note

Sensor check list

Check list for sensors are included in the respective sensor operating instructions.

9.2 Technical support

NOTICE
Repair and service must be carried out by approved Siemens Flow Instruments personnel only.

Note

Siemens Flow Instrument defines sensors as non-repairable products.

Technical Support

If you have any technical questions about the device described in these Operating Instructions and do not find the right answers, you can contact Technical Support:

- Via the Internet using the **Support Request:**
  Support request (http://www.siemens.com/automation/support-request)
- Phone: +49 (0) 180 5050 222

Further information about our technical support is available in the Internet at
Technical support (http://support.automation.siemens.com/WW/view/en/16604318)

Service & Support on the Internet

In addition to our documentation, we offer a comprehensive knowledge base online on the Internet at:

Service and support (http://www.siemens.com/automation/service&support)

There you will find:

- The latest product information, FAQs, downloads, tips and tricks.
- Our newsletter, providing you with the latest information about your products.
- A Knowledge Manager to find the right documents for you.
- Our bulletin board, where users and specialists share their knowledge worldwide.
- You can find your local contact partner for Industry Automation and Drives Technologies in our partner database.
- Information about field service, repairs, spare parts and lots more under "Services."

Additional Support

Please contact your local Siemens representative and offices if you have additional questions about the device

Find your contact partner at:

Local contact person (http://www.automation.siemens.com/partner)

9.3 Return procedures

Enclose the delivery note, the cover note for return delivery together with the declaration of decontamination form on the outside of the package in a well-fastened clear document pouch.

Required forms

- **Delivery Note**
- **Cover Note for Return Delivery** with the following information

  Cover note
  (http://cache.automation.siemens.com/dnl/zY/zY0OTg1AAAA_16604370_TxtObj/Begleitschein_RW_AD.pdf)

  – product (ordering number)

  – number of devices or spare parts returned

  – reason for the return

- **Declaration of Decontamination**

  Decontamination declaration
  (http://pia.khe.siemens.com/efiles/feldg/files/Service/declaration_of_decontamination_en.pdf)

  With this declaration you certify *that the returned products/spare parts have been carefully cleaned and are free from any residues.*

  If the device has been operated together with toxic, caustic, flammable or water-damaging products, clean the device before return by rinsing or neutralizing. Ensure that all cavities are free from dangerous substances. Then, double-check the device to ensure the cleaning is completed.

  We will not service a device or spare part unless the declaration of decontamination confirms proper decontamination of the device or spare part. Shipments without a declaration of decontamination will be cleaned professionally at your expense before further proceeding.

You can find the forms on the Internet and on the CD delivered with the device.

9.4 Recalibration

Siemens A/S Flow Instruments offers to recalibrate the sensor. The following calibrations are offered as standard:

- Standard matched pair calibration

Note

For recalibration the SENSORPROM® memory unit must always be returned with the sensor.

Troubleshooting/FAQs

10

Symptom	Output signals	Error code	Cause	Remedy
Empty display	Minimum		1. No power supply	Power supply Check MAG 5000/6000 for bended pins on the connector
			2. MAG 5000/6000 defective	Replace MAG 5000/6000
No flow signal	Minimum		1. Current output disabled	Turn on current output
			2. Digital output disabled	Turn on digital output
			3. Reverse flow direction	Change direction
		F70	Incorrect or no coil current	Check cables/connections
		W31	Measuring pipe empty	Ensure that the measuring pipe is full
		F60	Internal error	Replace MAG 5000/6000
	Undefined	P42	1. No load on current output	Check cables/connections
			2. MAG 5000/6000 defective	Replace MAG 5000/6000
		P41	Initializing error	Switch off MAG 5000/6000, wait 5 sec. and switch on again
Indicates flow with no flow in pipe	Undefined		Measuring pipe empty	Select empty pipe cut-off
			Empty pipe cut-off is OFF	Ensure that the measuring pipe is full
			Electrode connection missing/electrode cable is insufficiently screened	Ensure that electrode cable is connected and sufficiently screened
Unstable flow signal	Unstable		1. Pulsating flow	Increase time constant
			2. Conductivity of medium too low	Use special electrode cable
			3. Electrical noise potential between medium and sensor	Ensure sufficient potential equalization
			4. Air bubbles in medium	Ensure medium does not contain air bubbles
			5. High concentration of particles or fibres	Increase time constant
Measuring error	Undefined		Incorrect installation	Check installation
		P40	No SENSORPROM® unit	Install SENSORPROM® unit
		P44	CT SENSORPROM® unit	Replace SENSORPROM® unit or reset SENSORPROM® unit with MAG CT transmitter
		F61	Defective SENSORPROM® unit	Replace SENSORPROM® unit
		F62	Wrong type of SENSORPROM® unit	Replace SENSORPROM® unit

Symptom	Output signals	Error code	Cause	Remedy
		F63	Defective SENSORPROM® unit	Replace SENSORPROM® unit
		F71	Loss of internal data	Replace MAG 5000/6000
	Maximum	W30	Flow exceeds 100% of Qmax.	Check Q_{max} (Basic Settings)
		W21	Pulse overflow Volume/pulse too small	Change volume/pulse
			Pulse width too large	Change pulse width
Measuring approx. 50%			Missing one electrode connection	Check cables
Loss of totalizer data	OK	W20	Initializing error	Reset totalizer manually
##### Signs in display	OK		Totalizer roll over	Reset totalizer or increase totalizer unit

Technical data

11

11.1 Technical specifications

Mode of operation and design	Measuring principle	Electromagnetic with pulsed constant field
	Empty pipe	Detection of empty pipe (special cable required in remote mounted installation)
	Excitation frequency	Depends on sensor size
	Electrode input impedance	> 1 x 10^{14} Ω
Input	**Digital input**	11 ... 30 V DC, R_i = 4.4 KΩ
	Activation time	50 ms
	Current	$I_{DC\ 11\ V}$ = 2.5 mA, $I_{DC\ 30\ V}$ = 7 mA
Output	**Current output**	
	Signal range	0 ... 20 mA or 4 ... 20 mA, Alarm
	Load	< 800 Ω
	Time constant	0.1 … 30 s, adjustable (for batch: fixed at 0.1 s)
	Digital output	
	Frequency	0 ... 10 kHz, 50% duty cycle (uni/bidirectional)
	Pulse (active)	DC 24 V, 30 mA, 1 kΩ ≤ R_i ≤10 kΩ, short-circuit protected (power supplied from flowmeter)
	Pulse (passive)	DC 3 … 30 V, max. 110 mA, 200 Ω ≤ R_i ≤10 kΩ (powered from connected equipment)
	Time constant	0.1 … 30 s, adjustable (for batch: fixed at 0.1 s)
	Relay output	
	Time constant	Changeover relay, same as current output
	Load	42 V AC/2 A, 24 V DC/1 A
Low flow cut off	0 ... 9.9% of maximum flow	
Galvanic isolation	All inputs and outputs are galvanically isolated	
Max. measuring error (incl. sensor and zero point)	MAG 5000	0.4% ± 1 mm/s (for v > 0.1 m/s)

	MAG 6000	0.2% ± 1 mm/s (for v > 0.1 m/s)
Functions	Flow rate, 2 totalizers, low-flow cut-off, empty pipe cut-off, flow direction, error system, operating time, uni/bidirectional flow, limit switches, pulse output, control for cleaning and batch	
Rated operation conditions	**Ambient temperature**	
	Operation	Standard IP67, 19", blind and SV versions: -20 ... +60 °C (-4 ... +140 °F) CT version: -20 ... +50 °C (-4 ... +122 °F)
	Storage	-40 ... +70 °C (-40 ... +158 °F)
Mechanical load	18 ... 1000 Hz, 3.17 G rms, sinusoidal in all directions to IEC 68-2-36	
Degree of protection	IP67/NEMA 4X/6 to IEC 529 and DIN 40050 (1 mH_2O 30 min.)	
EMC performance	EN 61326-1 (industrial environments)	
	EN 61326-2-5	
Display and keypad	Totalizer	Two eight-digit counters for forward, net or reverse flow
	Display	Background illumination with alphanumeric text, 3 x 20 characters to indicate flow rate, totalized values, settings and faults; Reverse flow indicated by negative sign
	Time constant	Time constant as current output time constant
Design	Enclosure material	Fiber glass reinforced polyamide; optional (IP67 only): AISI 316 stainless steel
	Dimensions	See dimensional drawings
	Weight	0.75 kg (2 lb)
Power supply	115 ... 230 V AC +10% -15%, 50 ... 60 Hz, Fuse: 500 mA T 11 ... 30 V DC or 11 ... 24 V AC; Fuse 2 A T	
Power consumption	115 ... 230 V AC: 17 VA 24 V AC: 9 VA, I_N = 380 mA, I_{ST} = 8 A (30 ms) 12 V DC: 11 W, I_N = 920 mA, I_{ST} = 4 A (250 ms)	
Certificates and approvals	CE, C-UL US general purpose, C-tick, CSA/FM Class 1, div 2	
	Custody transfer approval (MAG 5000/6000 CT)	Cold water pattern approval: PTB OIML R 49, MI-001 Hot water pattern approval: DANAK OIML R 75 (MAG 6000 CT) Other media than water (milk, beer etc.) pattern approval: DANAK OIML R 117 (MAG 6000 CT) Energy metering : PTB K7.2
Communication	MAG 5000	Without communication or HART as option
	MAG 6000	Prepared for client mounted add-on modules: HART, MODBUS RTU/RS485, FOUNDATION Fieldbus H1, DeviceNet, PROFIBUS PA, PROFIBUS DP as add-on modules
	MAG 5000 CT / MAG 6000 CT	No communication modules approved

Transmitter IP67/NEMA 4X/6 compact polyamide

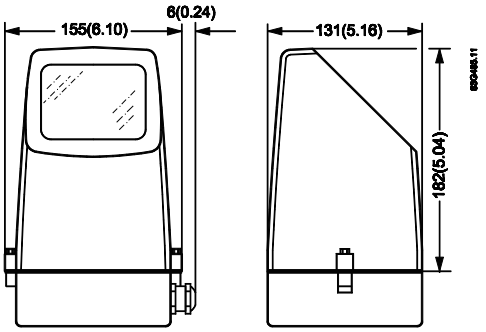

Weight: MAG 5000/6000: 0.75 kg (1.65 lbs)

Transmitter IP67/NEMA 4X/6 wall-mounted polyamide

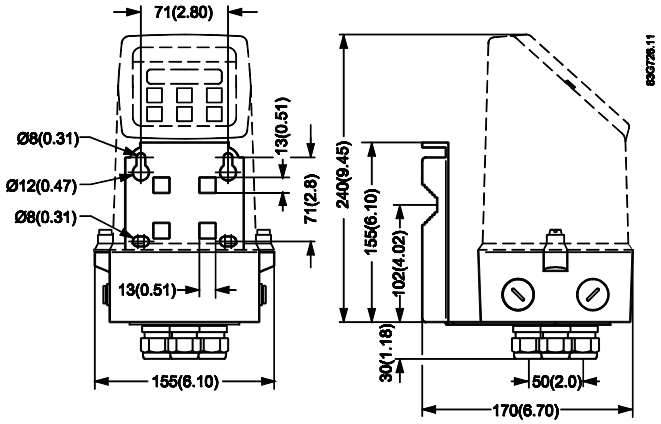

Weight(transmitter and wall mounting bracket): 1.65 kg (3.64 lbs)

11.2 Accuracy

For accuracy reference conditions, please see below.

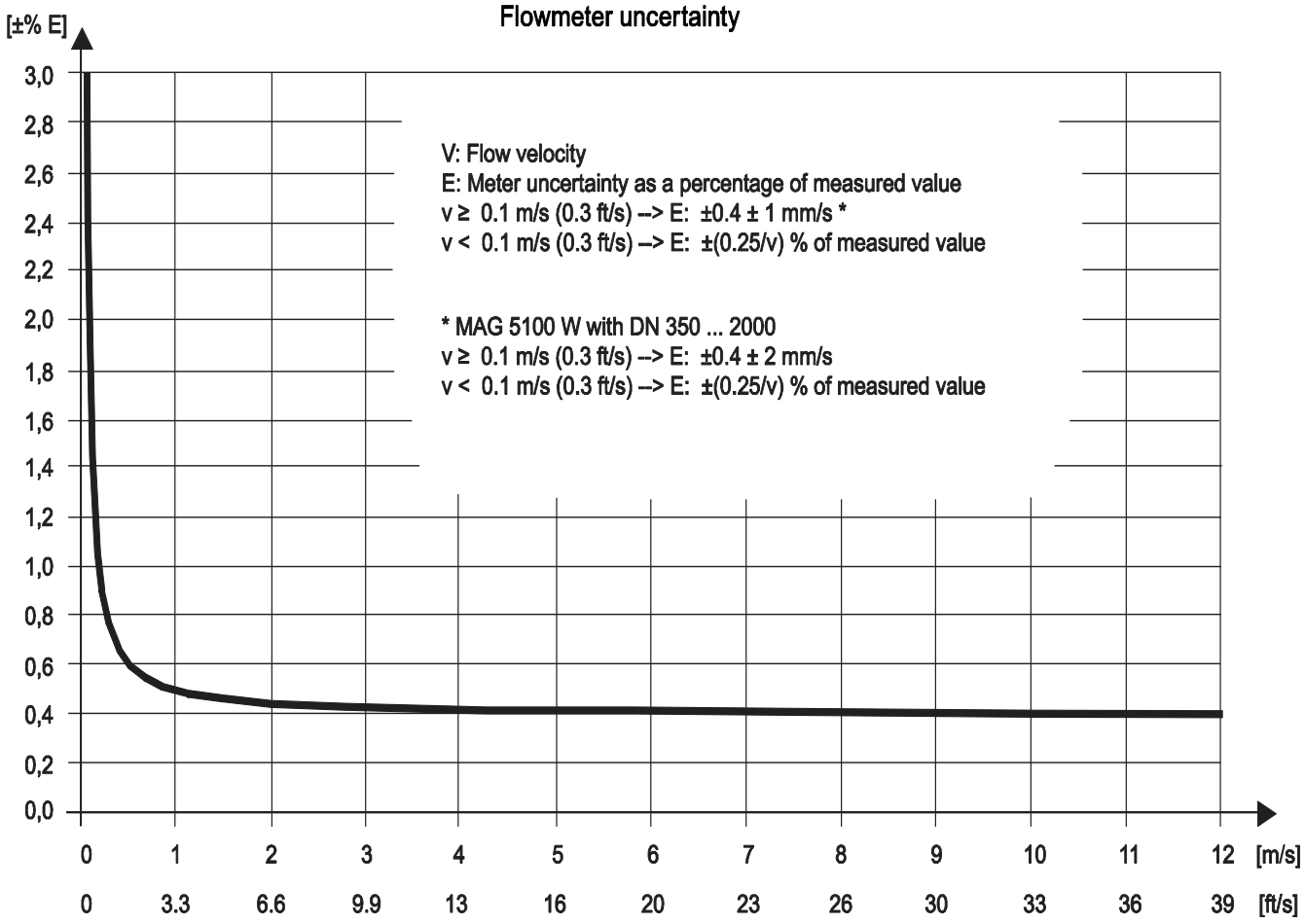

Figure 11-1 MAG 5000 with MAG 1100, MAG 1100 F, MAG 5100 W, MAG 3100 and MAG 3100 P and MAG 6000 with MAG 1100 (PFA), MAG 1100 F (PFA)

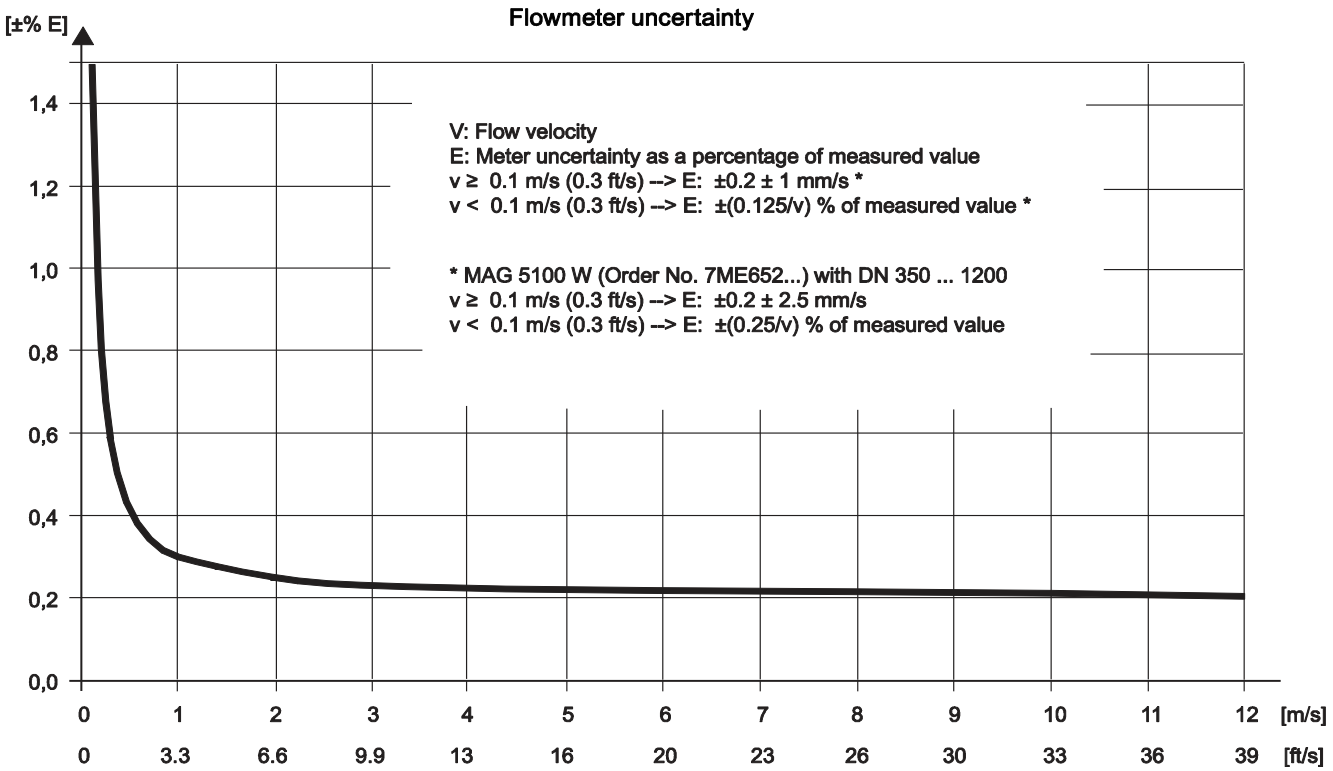

Figure 11-2 MAG 6000 with MAG 1100 (not PFA), MAG 1100 F (not PFA), MAG 5100 W, MAG 3100 and MAG 3100 P

Reference conditions

(ISO 9104 and DIN/EN 29104)

A calibration certificate is shipped with every sensor and calibration data are stored in SENSORPROM memory unit.

Medium temperature	20°C ± 5°C (68°F ± 9°C)
Ambient temperature	20°C ± 5°C (68°F ± 9°C)
Supply voltage	U_n ± 1%
Warming-up time	30 minutes
Incorporation in conductive pipe section Inlet section Outlet section	 10 x DN (DN ≤ 1200/48") 5 x DN (DN > 1200/48") 5 x DN (DN ≤ 1200/48") 3 x DN (DN > 1200/48")
Flow conditions	Developed flow profile

Reference conditions for sensor calibration

Current output	As pulse output ± (0.1% of actual flow + 0.05% FSO)
Effect of ambient temperature Display/frequency/pulse output Current output	 < ± 0.003% / °C act. < ± 0.005% / °C act.
Effect of supply voltage	< 0.005% of measuring value on 1% change
Repeatability	± 0.1% of actual flow for V ≥ 0.5 m/s (1.5 ft/s) and conductivity ≥ 10 µS/cm

Additions in the event of deviations from reference conditions

11.3 Output characteristics

Current output

Output characteristics	Bidirectional mode	Unidirectional mode
0...20 mA	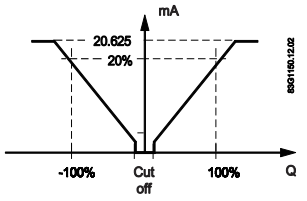	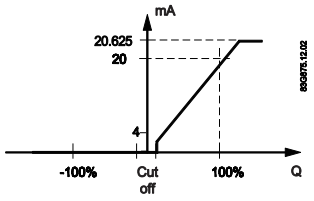
4...20 mA	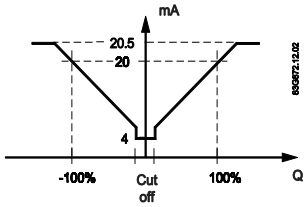	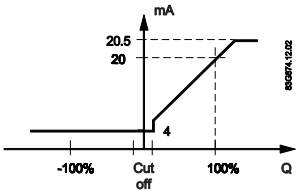

Frequency output

Bidirectional mode	Unidirectional mode
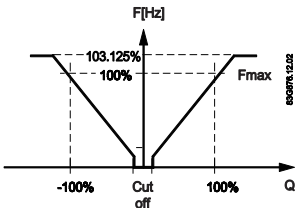	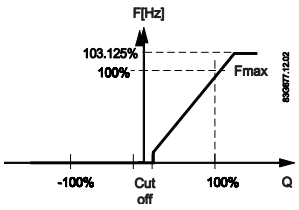

Pulse output

Bidirectional mode	Unidirectional mode
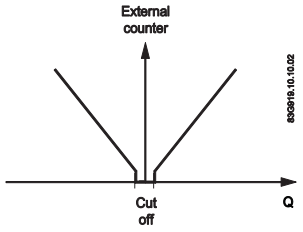	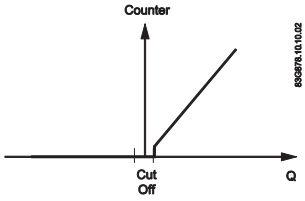

Relay output

Bidirectional mode		Unidirectional mode	
Power down	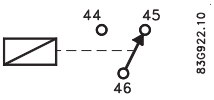	Active	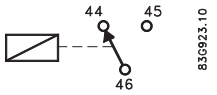

Error relay output

Bidirectional mode		Unidirectional mode	
No error	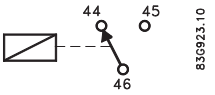	Error	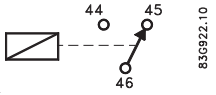

Limit switch (can be used as direction switch)

1 set point	2 set points
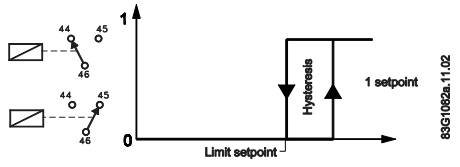	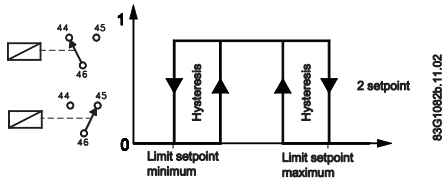
Passive Digital output	Passive Digital output

1 set point	2 set points
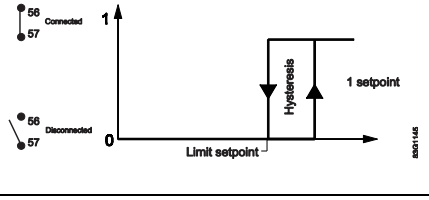	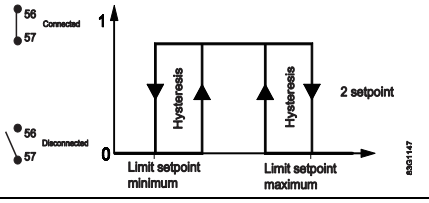
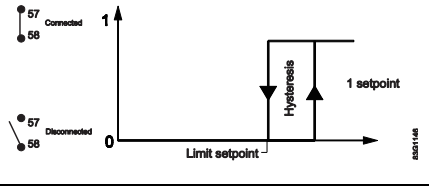	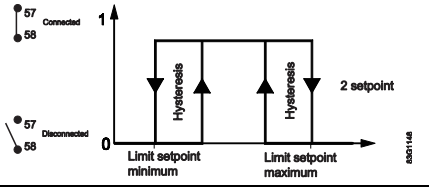

Note

Active digital output is not avaiable with MAG 6000 I.

Batch on digital output

Unidirectional mode (forward flow only)
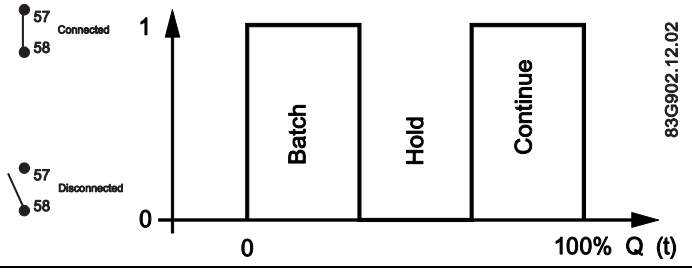

Totalizer lap

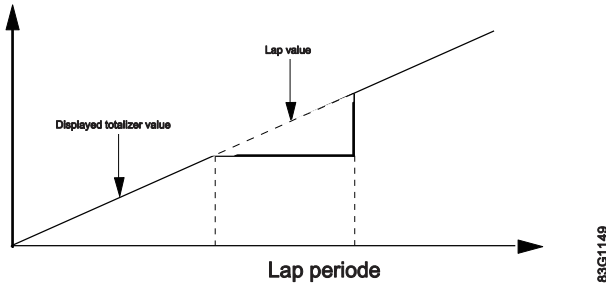

Batch on relay output

Unidirectional mode (forward flow only)			
Hold	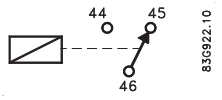	Batch	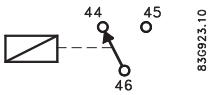

11.4 Cable data

Description

Cable for standard electrode or coil	
Electrode cable, double shielded	
Cable kit with standard coil cable and electrode cable double shielded (also available as low noise cable for MAG 1100 sensor)	

Technical data

		Standard electrode cable (electrode/coil)	Special cable (electrode)
Basic data	No. of conductors	3	3
	Sqr. area	1.5 mm^2	0.25 mm^2
	Screen	Yes	Double
	Color code	Brown, blue, black	Brown, blue, black
	Outside color	Grey	Grey
	Ext. diameter	7.8 mm	8.1 mm
	Conductor	Flexible CU	Flexible CU
	Isolation material	PVC	PVC
Ambient temperature	Flexible installation	-5 ... +70°C (23 ... 158°F)	-5 ... +70°C (23 ... 158°F)
	Non-flexible installtaion	-30 ... +70°C (-22 ... 158°F)	-30 ... +70°C (-22 ... 158°F)
Cable parameter	Capacity	161.50 pF/m	N/A
	Inductance	0.583 µH/m	N/A
	L/R	43.83 þH/Ω	N/A

11.5 Cable requirements

		Coil cable	Electrode cable
Basic data	No. of conductors	2	3
	Min. sqr. area	0.5 mm^2	0.2 mm^2
	Screen	Yes	Yes
	Max. capacitance	N/A	350 pF/m
Max. cable loop resistance	Media temperature:		
	< 100 °C	40 Ω	N/A
	> 200 °C	6 Ω	N/A
Cable glands on sensor	M20x1.5 gland - Cable ø 5 ... 13 mm (0.20 ... 0.51 inches)		
	½ NPT gland - cable ø 5 ... 9 mm (0.20 ... 0.35 inches)		

WARNING

Cable glands

For Ex zone 1 installations only certified cable glands with protection type "e" can be used for the power supply and the coil cable. The cable glands must be approved for the actual temperature and cable dimension.

Spare parts/Accessories

12

12.1 Ordering

In order to ensure that the ordering data you are using is not outdated, the latest ordering data is always available on the Internet:

Catalog process instrumentation (http://www.siemens.com/processinstrumentation/catalogs)

12.2 Accessories

Description	
Wall mounting unit	
Display protection lid	
Communication modules for MAG 6000	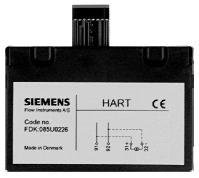

12.3 Spare parts

Description	
Connection plate	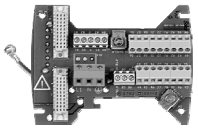
SENSORPROM® memory unit	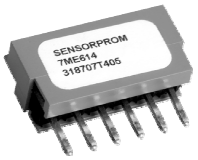
Display unit	
Communication modules for MAG 6000	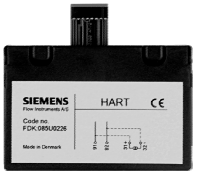

12.4 Sun shield

Description	
Sun shield	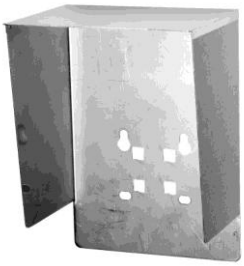

Menu diagrams

A

A.1 Transmitter menu overview

The menu diagrams shown on the following pages apply to MAG 5000/6000 as well as MAG 6000 I.

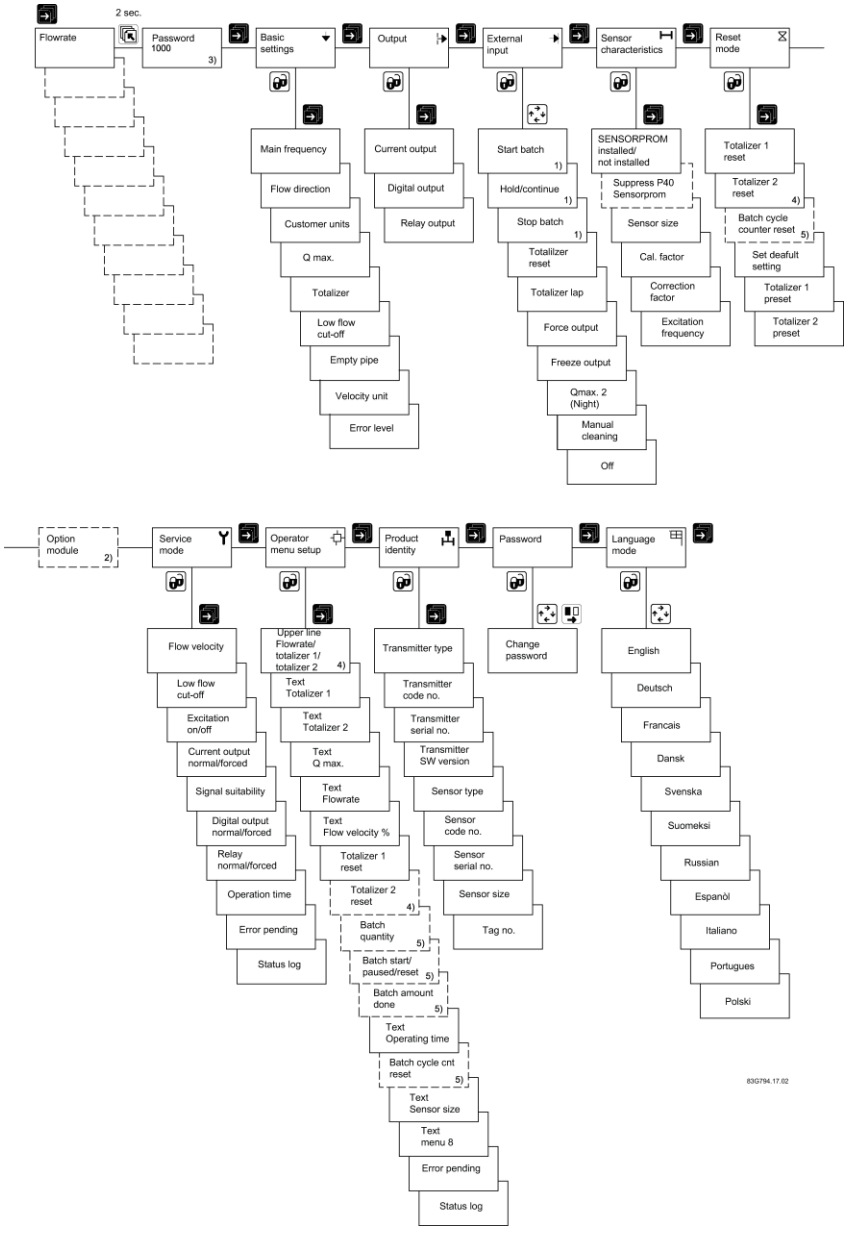

1) Not available in MAG 5000
2) Add-on module
3) Factory-set password: 1000
4) Not available when batch
5) Only available when batch

A.2 Basic settings

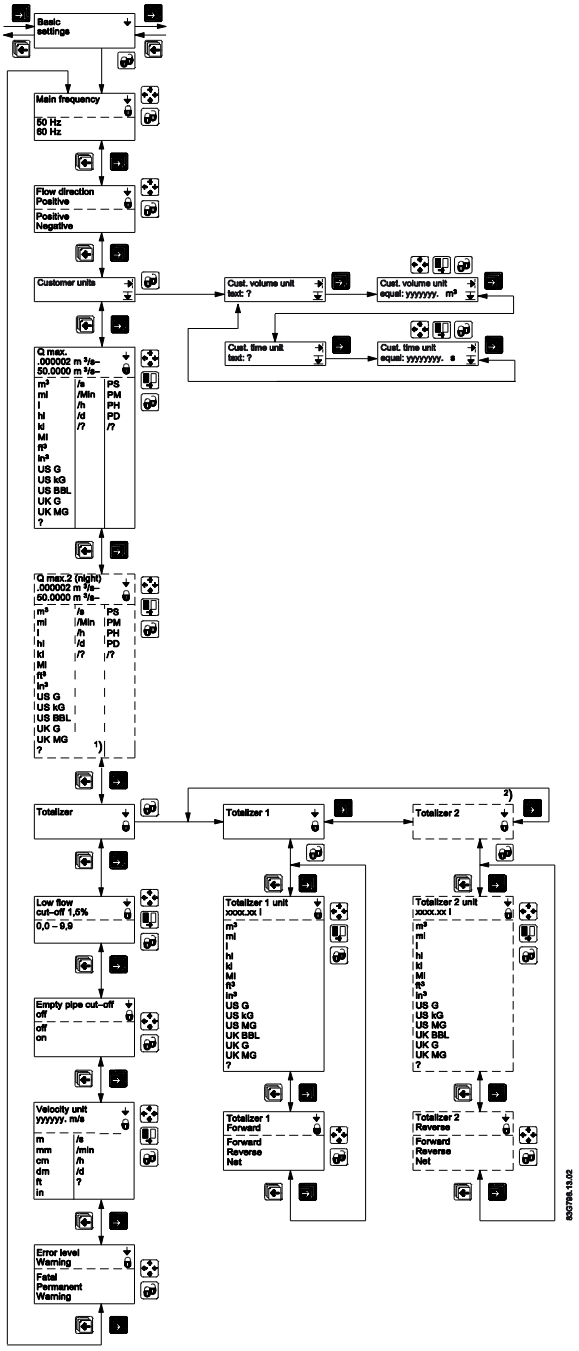

1) The question mark at unit selections stand for customer units. The unit is shown as a question mark on display if not overwritten with customer's own unit text setup using PDM or ordered specially using Y20 in ordering system.

   The flow rate unit can be "?/?" or show customer unit texts as for example "AcrFt/y" (Acre feet/year).

2) When batch is selected on digital output or relay, Totalizer 2 is not shown because it is controlled by the batch function.

A.3 Current output

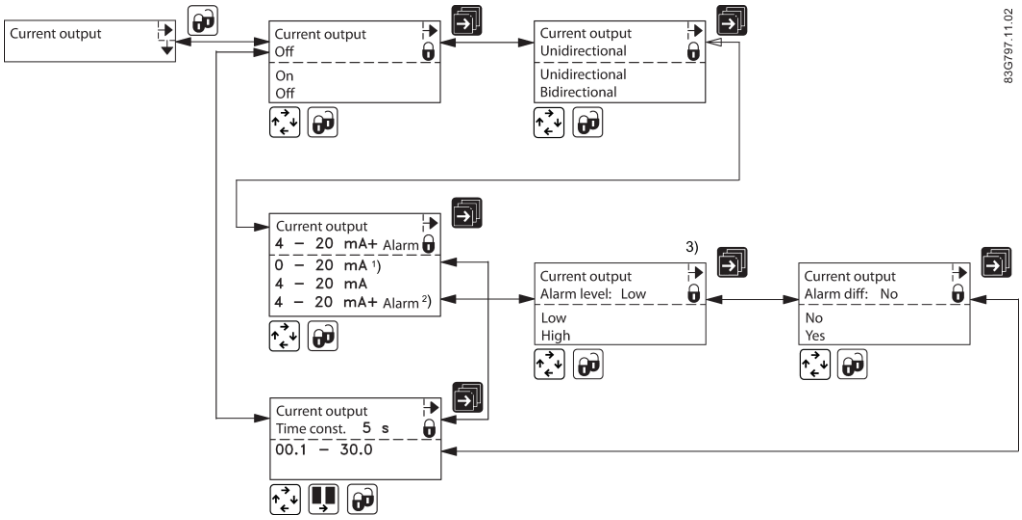

1) If HART communication is installed, it is not possible to set the output for 0-20 mA (even though the option is visible in the display). This is due to the fact that HART does not work if the output falls below 2-3 mA.

2) 4-20 mA + Alarm is the default setting for MAG 6000 I. For all other variants, the default setting is 4-20 mA.

3) The controlling of alarm levels does not recognize if the jumper is mounted for passive output. Do not combine differentiation and low alarm level together with passive output. The output will try to pull down the level to 1.3 mA at fatal errors which is not possible for passive output.

A.4 Digital output - pulse

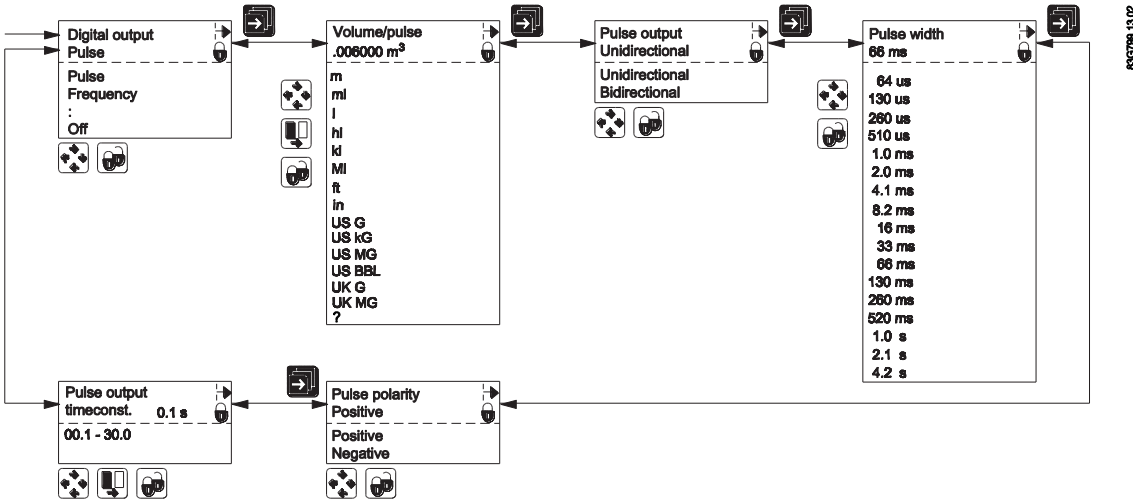

A.5 Digital output - frequency

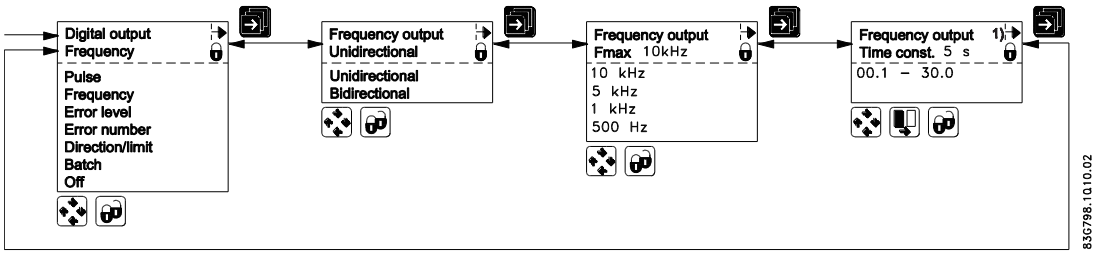

A.6 Error level

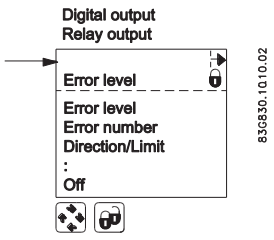

A.7 Error number

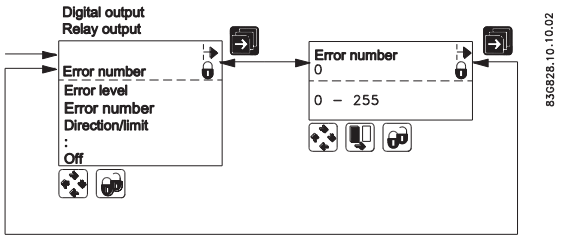

A.8 Direction/limit

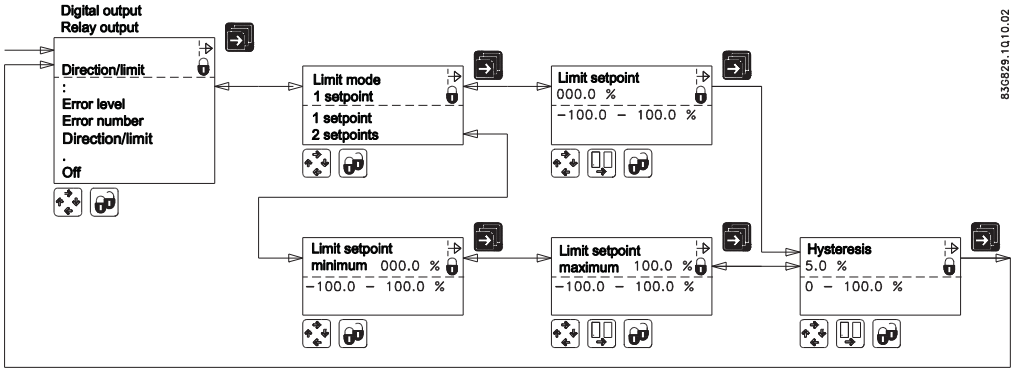

A.9 Batch

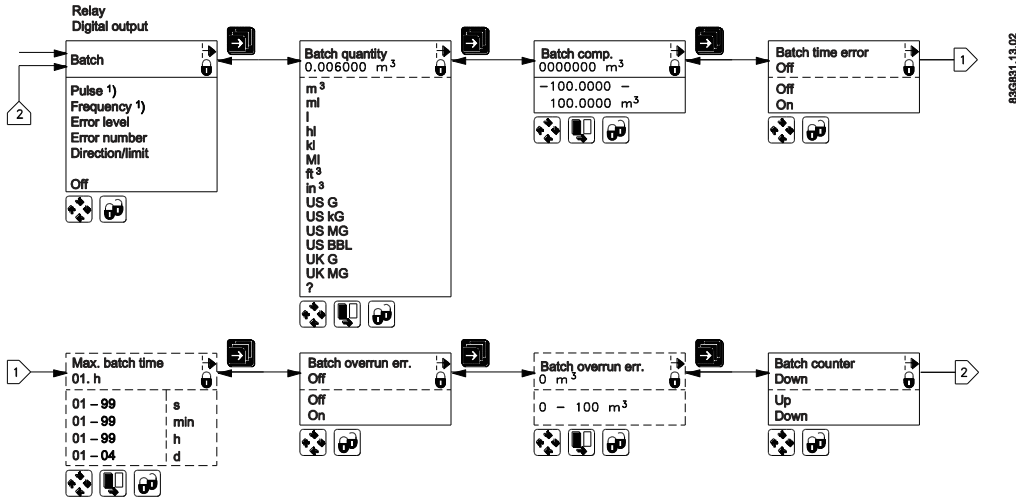

1) Visible only on Digital output.

Note

If batch function is chosen on the relay output, the digital output will be turned off if it has been set up for pulse, frequency or batch.

If digital output is set up for pulse, frequency or batch, then the relay output will be turned off if it has been set up for batch.

A.10 External input

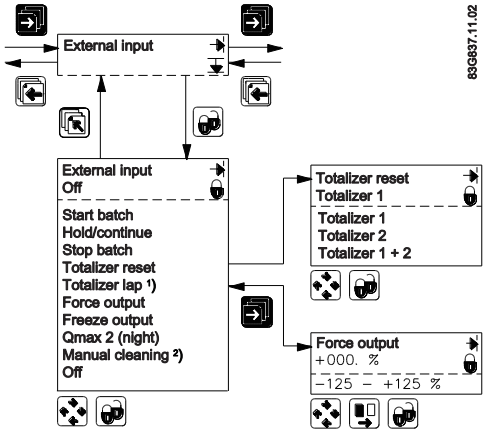

1) The value showing totalizer 1 on the display is frozen for as long as the digital output is activated. However, totalizer 1 continues counting, and when the digital input is released, the value on the display again follows totalizer 1.

2) MAG 6000 I cannot be equipped with cleaning unit. The cleaning option for relay output is however possible. When selecting function for MAG 6000 I relay output, the relay output has the same behavior as if cleaning unit was installed.

   The relay output of the transmitter determines when the relay is on by applying voltage for approximately 60 seconds. The metering is resumed after another 60 seconds when the cycle is complete. (The display is locked during this time). The time cycle can be set at 1 to 240 hours. If the cycle is set at for example three hours, the transmitter will be active every three hours.

A.11 Sensor characteristics

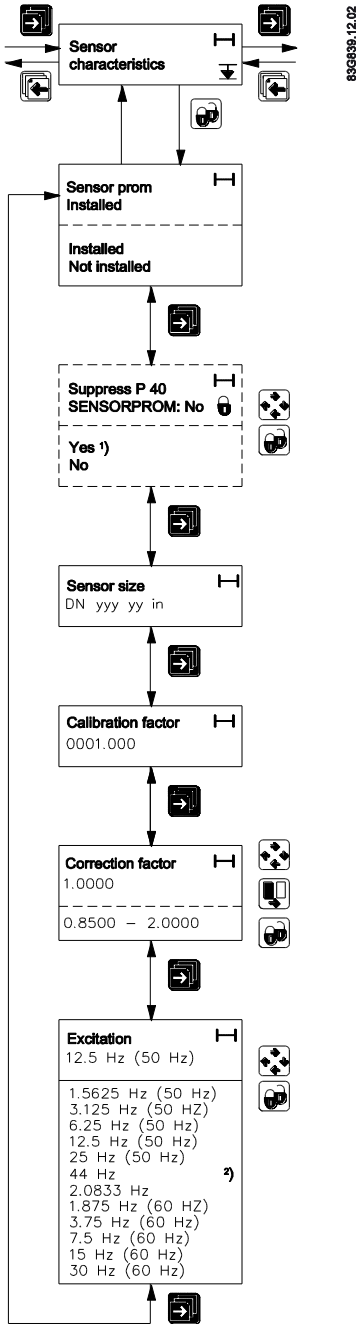

1) Error status (level or number) on an output is updated only at the time the error status changes (occurs or disappears). If P40 is suppressed after it has been detected (at power up), the output does not change state. In this case the power must be switched off/on to suppress the P40 error on the output.

2) The frequency can be set to 44 Hz in the MAG 6000 SV transmitter only.

A.12 Reset mode

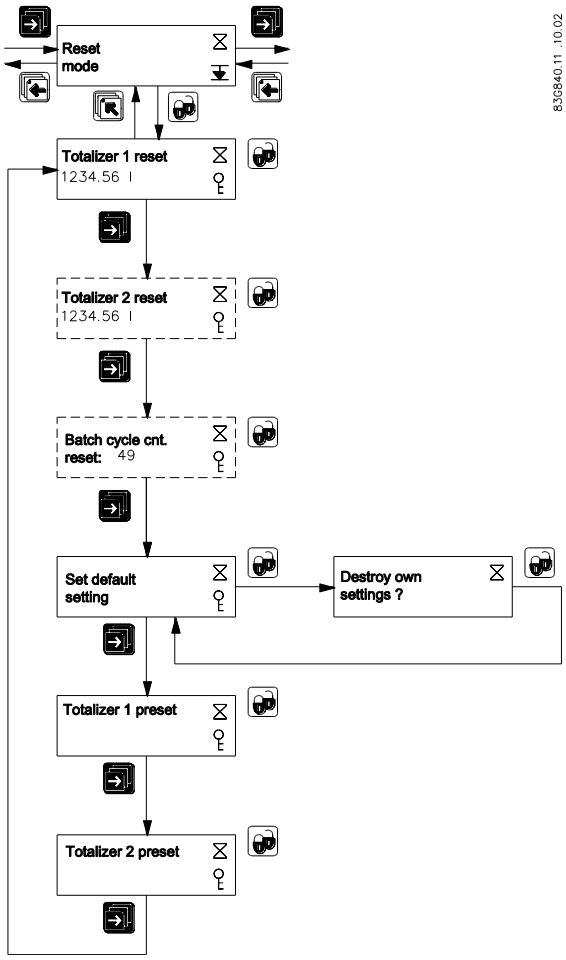

A.13 Reset mode - MAG 6000 SV

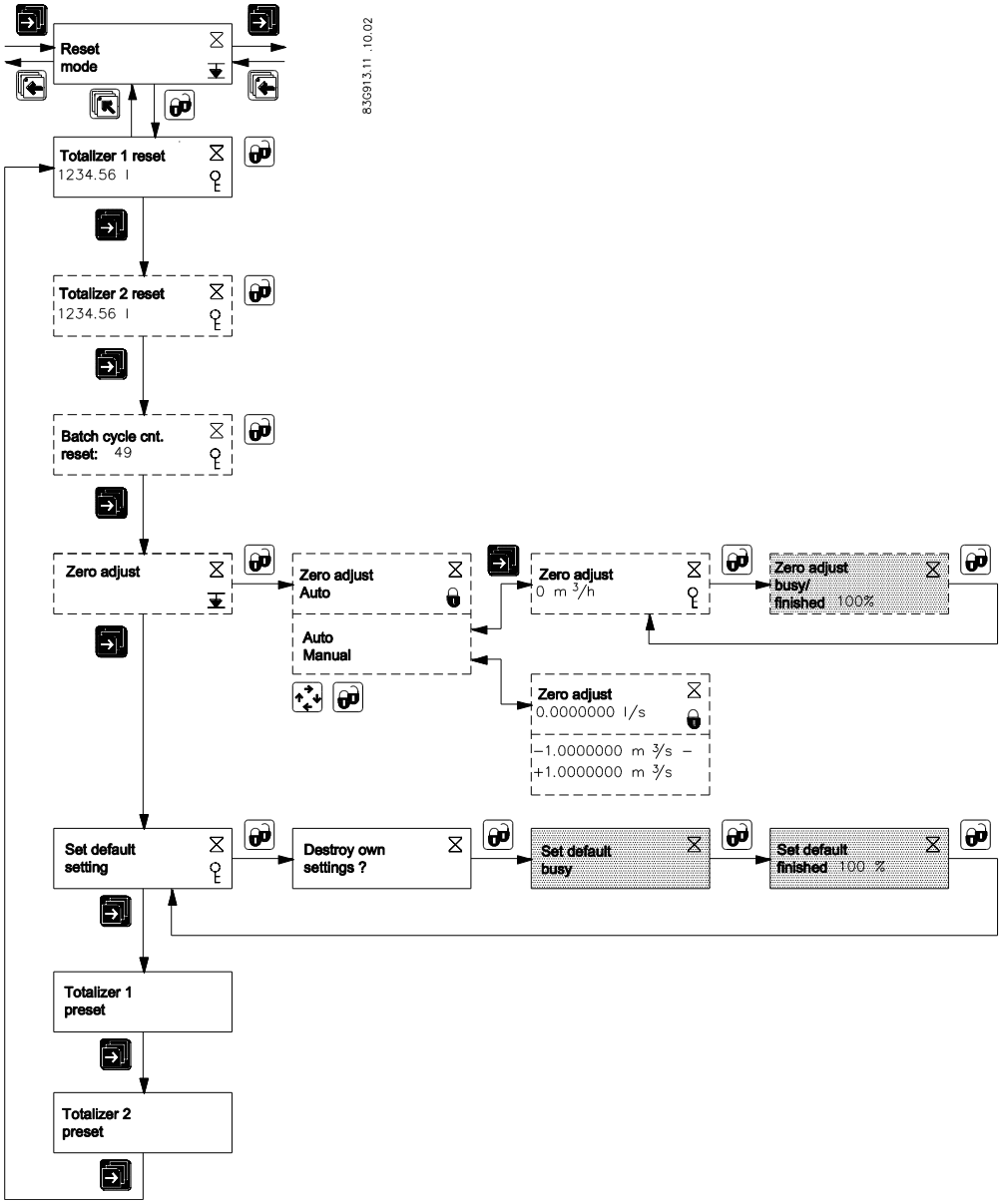

A.14 Service mode

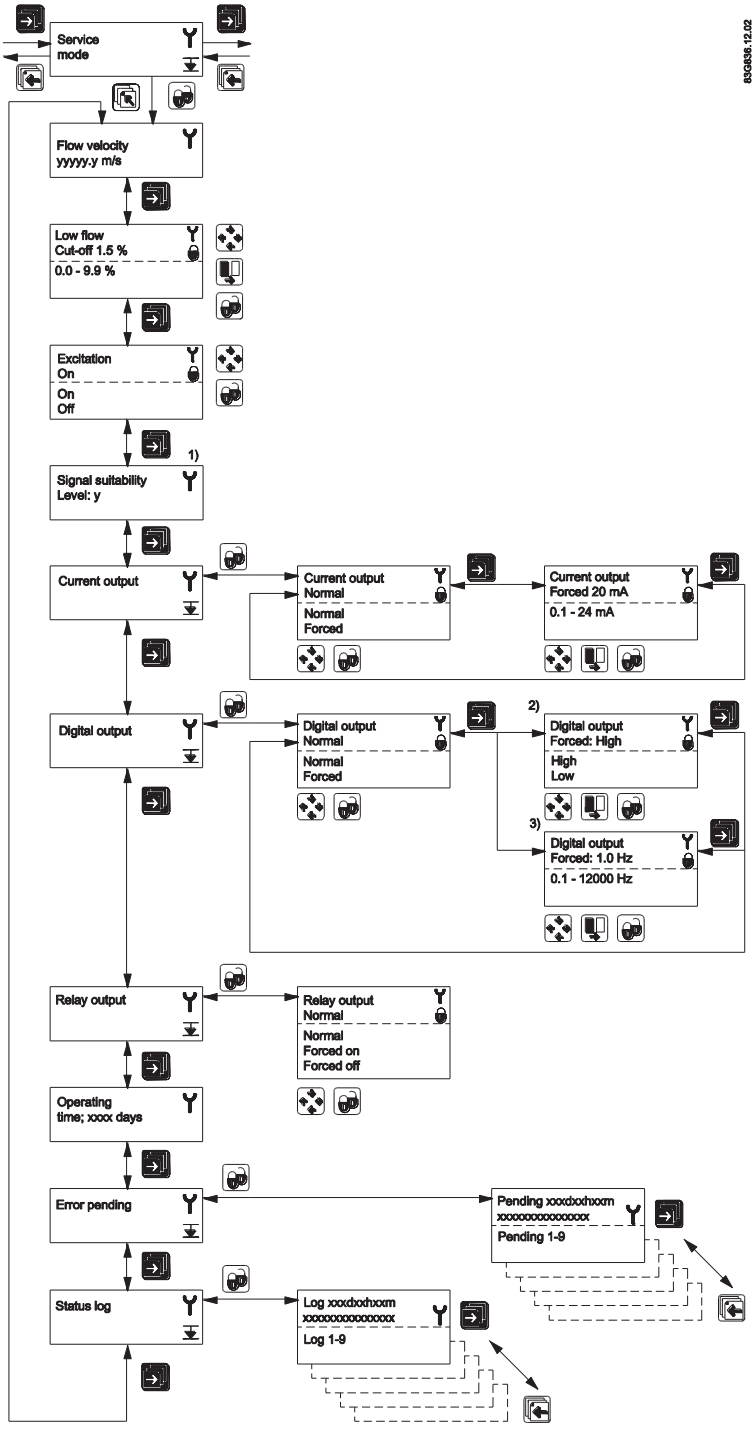

1) Signal suitability is a level from 0 to 9 of the electrode measured voltage. Level 0 is equal to the limit value that is set for empty pipe error detection, and level 9 is the best signal measured.

2) If digital output is set to pulse (standard).

3) If digital output is set to frequency.

A.15 Operator menu setup

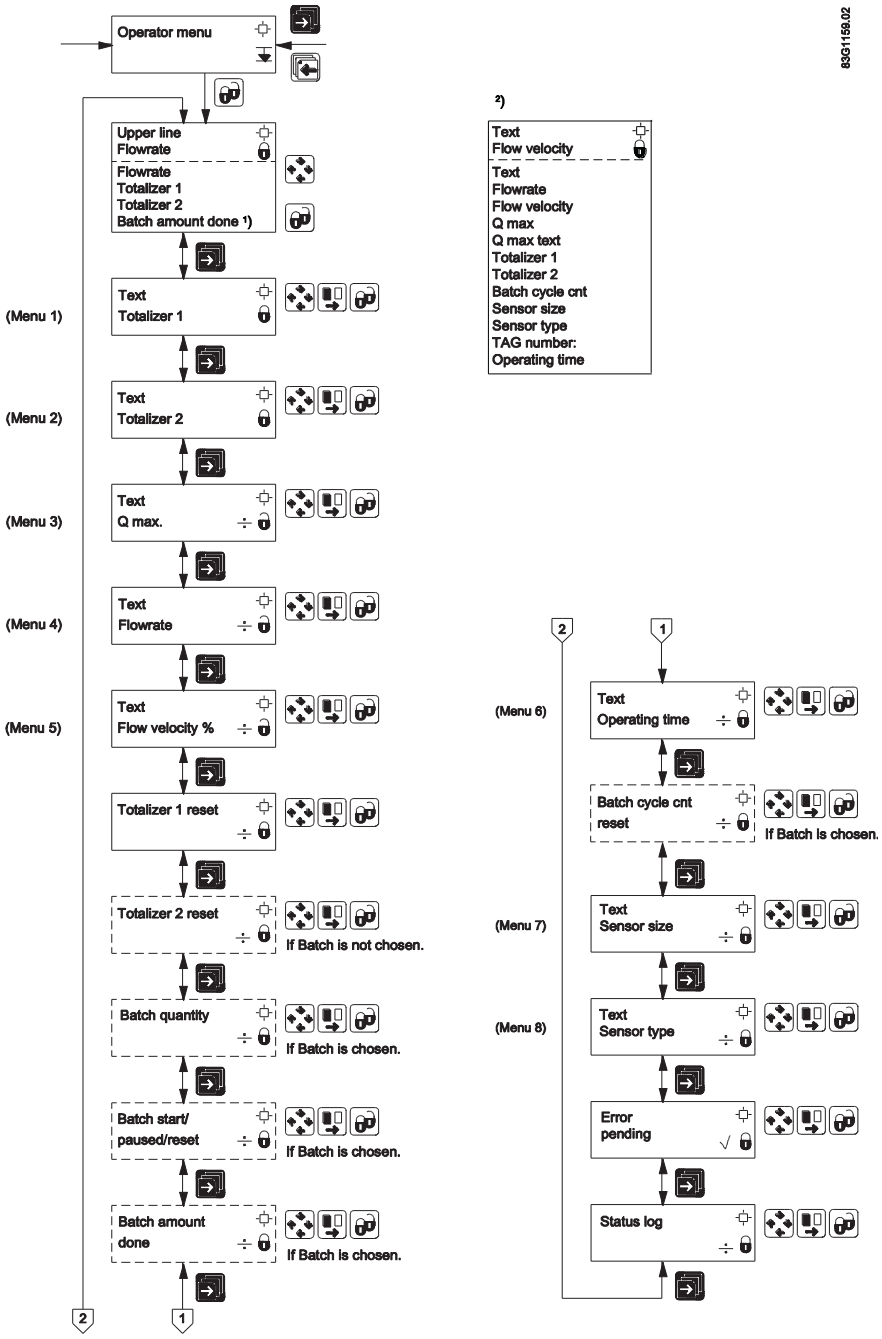

1) When selecting Batch amount for upper line, the upper line is initially blank. The amount done may not appear until the batch is started.

2) 'Text' means that the text for the chosen measured value is shown. For example, if textis chosen in line 2 and flow velocity is chosen in line 3, the text "Flow velocity " is shown in line2 and the measured flow velocity is shown in line 3.

A.16 Product identity

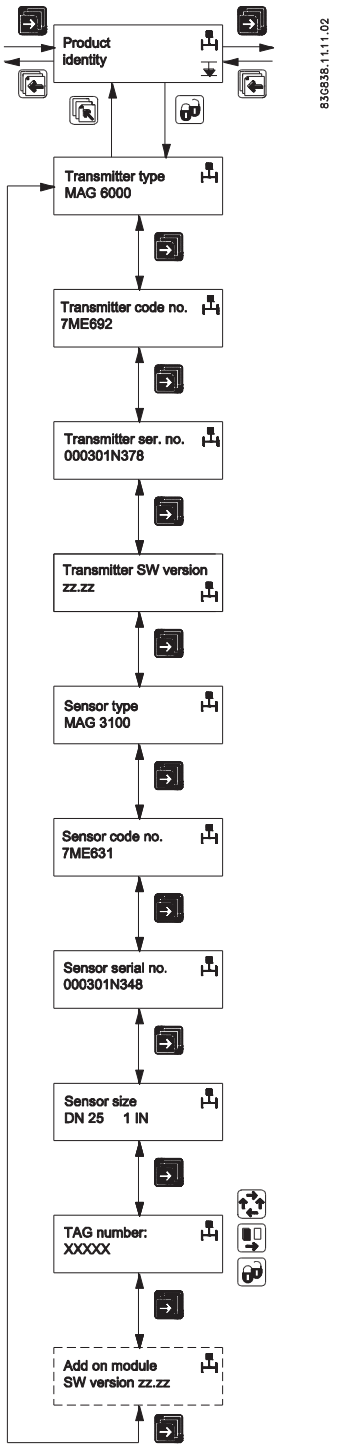

A.17 Add-on communication module

Example: HART

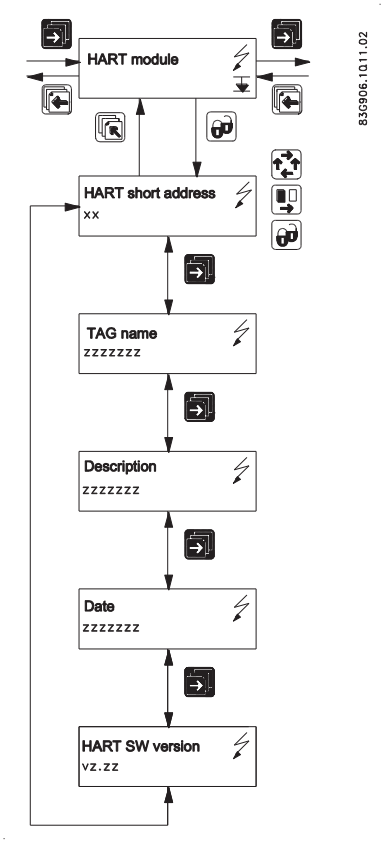

Note

Burst mode is not available with HART communication

A.18 Cleaning

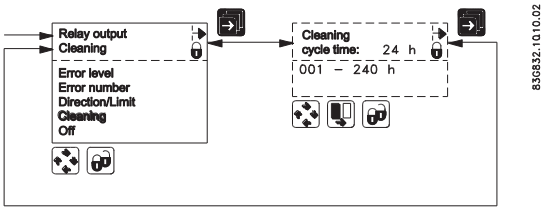

Note

Relay outputs

If cleaning unit is installed, relay outputs must always be used to operate cleaning.

Relay outputs cannot be used for other purposes

A.19 MAG 5000/6000 CT menu overview

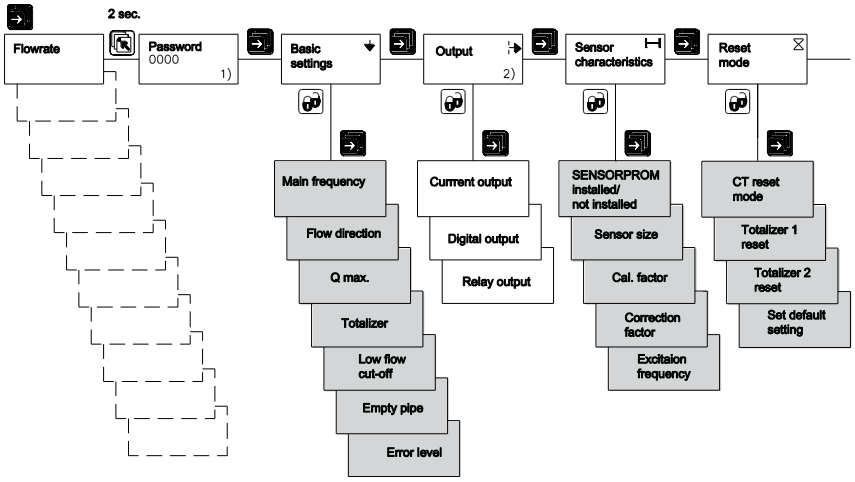

Figure A-1 Overview MAG 5000 CT and MAG 6000 CT (part 1)

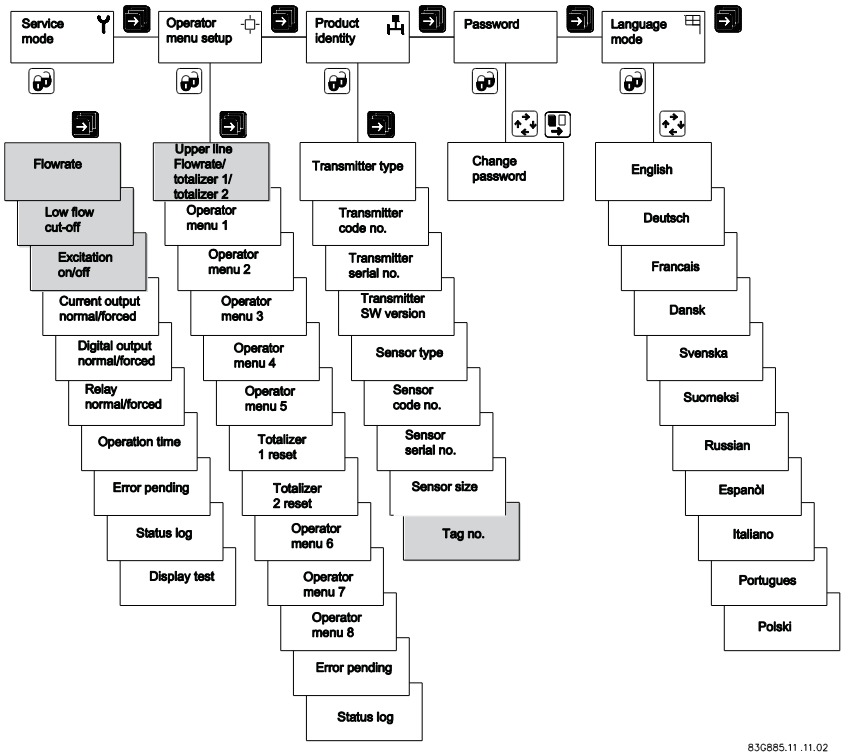

1) Factory-set password: 1000

2) Not visible when CT mode is "Hot water"

Figure A-2 Overview MAG 5000 CT and MAG 6000 CT (part 2)

Note
Sealing

Menus marked with gray are locked when transmitter is sealed.

A.20 Change password

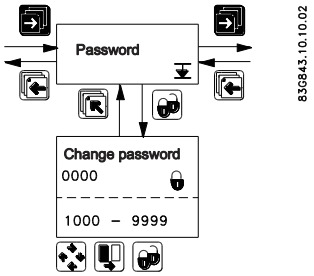

Factory settings

B

B.1 Transmitter factory settings

The factory settings shown on the following pages apply to MAG 5000/6000 as well as MAG 6000 I.

Menu item	Parameter	Factory settings	Options	More info
Password	Password	1000	1000 ... 9999	Changing password (Page 42) and Change password (Page 89)
Basic settings	Flow direction	Positive	Positive, negative	Changing basic settings (Page 43)
	Q_{max}	Sensor size dependent	Sensor size dependent	
	• *volume unit*	*Sensor size dependent*	*m^3, ml, l , hl, kl, Ml, ft^3, in^3, US G, US kG, US MG, US BBL, UK G, UK kG, UK MG, ? (customer unit)*	
	• *time unit*	*Sensor size dependent*	*Sec., min., hour, day, ? (customer unit)*	
	Totalizer 1	Forward	Forward, reverse, net	
	• *Totalizer 1 unit*	*Sensor size dependent*	*m^3, ml, l , hl, kl, Ml, ft^3, in^3, US G, US kG, US MG, US BBL, UK G, UK kG, UK MG, ? (customer unit)*	
	Totalizer 2	Reverse	Forward, reverse, net	
	• *Totalizer 2 unit*	*Sensor size dependent*	*m^3, ml, l , hl, kl, Ml, ft^3, in^3, US G, US kG, US MG, US BBL, UK G, UK kG, UK MG, ? (customer unit)*	
	Low flow cut-off	1.5%	0 ... 9.9%	
	Empty pipe	Off	On, Off	
	Velocity unit	m/s	m, mm, cm, dm, ft , in per s, min, h, d, ? (customer unit)	
	Error level	Warning	Fatal, permanent, warning	
Output	Current output	Off for MAG5000/ 6000 On for MAG6000I Namur	On/off, Unidirectional/bidirectional, 0...20 mA/4...20 mA/4...20 mA + Alarm	Output settings (Page 47)
	• *Alarm level*	*Low*	*High/Low*	
	• *Alarm diff.*	*No*	*Yes/No*	
	• *Time constant*	*5 s*	*0.1...30 s*	

Menu item	Parameter	Factory settings	Options	More info
	Digital output	Pulse	Error, direction/limit, batch, frequency, pulse, error number, off	Digital output - pulse (Page 78)
	Relay output	Error level	Error, direction/limit, cleaning, error number, off	Error level (Page 78)
	Direction/limit switch	Off	1 setpoint, 2 setpoints	Direction/limit (Page 79)
	• *Setpoints*	*0%*	*-100 ... +100%*	
	• *Hysteresis*	*5%*	*0.0 ... 100%*	
	Batch	Off		Batch (Page 79)
	• *Batch quantity*	*0*	*Sensor size dependent*	
	• *Batch compensation*	*0*	*-100 ... +100 m³*	
	• *Batch counter*	*Down*	*Up, down*	
	Frequency	Off	500 Hz, 1 kHz, 5 kHz, 10 kHz	Digital output - frequency (Page 78)
	• *Time constant*	*5 s*	*0.1 ... 30 s*	
	Pulse	On		Digital output - pulse (Page 78)
	• *Pulse polarity*	*Positive*	*Positive, negative*	
	• *Pulse width*	*66 ms*	*64 µs 130 µs, 260 µs, 510 µs, 1.0 ms, 2.0 ms, 4.1 ms, 8.2 ms, 16 ms, 33, ms, 66 ms, 130 ms, 260 ms, 520 ms, 1.0 s, 2.1 s, 4.2 s*	
	• *Volume/pulse*	*Sensor size dependent*	*Dimension-dependent*	
	• *Time constant*	*0.1 s*	*0.1 ... 30 s*	
External input	External input	Off	Batch, reset totalizer, freeze output, forced output, off	External input (Page 80)
	• *Batch*	*Start*	*Start, hold/continue, stop, Qmax 2*	

Menu item	Parameter	Factory settings	Options	More info
Sensor characteristics	Correction factor	1	0.85 ... 2.00	Sensor characteristics (Page 81)
Language	Language	English	English, German, French, Danish, Swedish, Finnish, Spanish, Russian, Italian, Portuguese, Polish	Changing language (Page 46)
Operator menu	Primary field	Flow rate	Flow rate, Totalizer 1, Totalizer 2	Changing operator menu setup (Page 45)
	Title/subtitle lines	Flow rate	Flow rate, Flow velocity, Qmax, Totalizer 1, Totalizer 2, Totalizer 1 reset, Totalizer 2 reset, Batch start/paused/stop, Batch cycle counter, Batch cycle counter reset, Sensor size, Sensor type, Error pending, Status log, Tag No.	

B.2 50 Hz Dimension dependent

50 Hz Dimension dependent factory settings MAG 1100, MAG1100F, MAG 3100, MAG 3100 P and MAG 5100W with M20 cable glands

DN	Q_{max}*					
	Factory settting	MAG 5100 W (Order no. 7ME6520)		MAG 1100, MAG 1100 F, 5100 W (Order no. 7ME6580) MAG 3100, 3100 P		unit
mm (inch)		min.	max.	min.	max.	
2 ($^1/_{12}$)	30	-	-	3.903623	156.1448	l/h
3 ($^1/_8$)	70	-	-	6.361726	254.469	l/h
6 ($^1/_4$)	300	-	-	25.44691	1017.876	l/h
10 ($^3/_8$)	900	-	-	70.68584	2827.433	l/h
15 (½)	2000	-	-	159.0432	6361.725	l/h
25 (1)	5000	441.7865	17671.45	441.7865	17671.45	l/h
40 (1½)	12	1.130974	45.23893	1.130974	45.23893	m^3/h
50 (2)	20	1.574527	62.98107	1.767146	70.68583	m^3/h
65 (2½)	30	2.499681	99.98723	2.986477	119.459	m^3/h
80 (3)	50	4.003646	160.1458	4.523894	180.9557	m^3/h
100(4)	120	6.252163	250.0864	7.068584	282.7433	m^3/h
125 (5)	180	10.00647	400.2585	11.04467	441.7864	m^3/h
150 (6)	250	15.74527	629.8107	15.90432	636.1725	m^3/h
200(8)	400	24.93797	997.5184	28.27434	1130.973	m^3/h
250(10)	700	40.00377	1600.15	44.17865	1767.145	m^3/h
300 (12)	1000	62.50395	2500.157	63.61726	254469	m^3/h
350 (14)	1200	86.59015	3463.605	86.59015	3463.605	m^3/h

DN	Q_{max}*					
	Factory settting	MAG 5100 W (Order no. 7ME6520)		MAG 1100, MAG 1100 F, 5100 W (Order no. 7ME6580) MAG 3100, 3100 P		unit
mm (inch)		min.	max.	min.	max.	
400 (16)	1800	113.0974	4523.893	113.0974	4523.893	m^3/h
450 (18)	2000	143.1389	5725.552	143.1389	5725.552	m^3/h
500 (20)	3000	176.7146	7068.583	176.7146	7068.583	m^3/h
600 (24)	4000	254.4691	10178.76	254.4691	10178.76	m^3/h
700 (28)	4500	346.3606	13854,42	346.3606	13854.42	m^3/h
750 (30)	5000	397.6079	15904.31	397.6079	15904.31	m^3/h
800 (32)	7000	452.3894	18095,57	452.3894	18095.57	m^3/h
900 (36)	9000	572.5553	22902,21	572.5553	22902.21	m^3/h
1000 (40)	12000	706.8584	28274.33	706.8584	28274.33	m^3/h
1050 (42)	12000	706.8584	28274.33	706.8584	28274.33	m^3/h
1100 (44)	14000	855.986	34211.94	855.2986	3421194	m^3/h
1200 (48)	15000	1017.877	40715.04	1017.877	40715.04	m^3/h
1400 (54)	25000	-	-	1385.443	55417.69	m^3/h
1500 (60)	30000	-	-	1590.432	63617.25	m^3/h
1600 (66)	35000	-	-	1809.558	72382.29	m^3/h
1800 (72)	40000	-	-	2290.222	91608.84	m^3/h
2000 (78)	45000	-	-	2827.434	113097.3	m^3/h
2200 (90)	50000	-	-	3421,195	136847.7	m^3/h
2400 (96)	55000	-	-	4071.505	162860.1	m3/h
2600 (102)	60000	-	-	4778.363	191134.4	m3/h
280 (114)	65000	-	-	5541.77	221670.7	m3/h
3000 (120)	70000	-	-	6361.726	254469	m3/h

* The min. and max. amount values show mathematical values and do not indicate measurement accuracy

B.3 60 Hz Dimension dependent

60 Hz Dimension dependent factory settings MAG 1100, MAG1100F, MAG 3100, MAG 3100 P and MAG 5100W with ½" NPT cable glands

DN	$Q_{max.}$					
	Factory setting*	MAG 5100 W (Order no. 7ME6520)		MAG 1100, MAG 1100 F, 5100 W (Order no. 7ME6580) MAG 3100, 3100 P		unit
mm (inch)		min.	max.	min.	max.	
2 ($^1/_{12}$)	0.14	-	-	0.01718714	0.6874852	US GPM
3 ($^1/_8$)	0.31	-	-	0.02800984	1.120393	US GPM
6 ($^1/_4$)	1.4	-	-	0.1120394	4.481573	US GPM
10 ($^3/_8$)	4	-	-	0.3112204	12.44881	US GPM
15 (½)	9	-	-	0.7002459	28.0	US GPM
25 (1)	23	1.945128	77.80509	1.945128	77.80509	US GPM
40 (1½)	53	4.979526	199.181	4.979526	199.181	US GPM
50 (2)	89	6.932434	277.2973	7.78051	311.2203	US GPM
65 (2½)	133	11.00577	440.2305	13.14907	525.9624	US GPM
80 (3)	221	17.62753	705.1008	19.91811	796.7241	US GPM
100(4)	529	27.52745	1101.097	31.12204	1244.881	US GPM
125 (5)	793	44.05714	1762.285	48.62819	1945.127	US GPM
150 (6)	1101	69.32434	2772.973	70.02459		
200 (8)	1762	109.7986	4391.941		4979.525	
250 (10)	3083	176.1313	7045.251	194.5128		
300 (12)	4403	275.1967	11007.86	280.0984	11203.93	US GPM
350 (14)	5284	381.245	15249.79	381.245	15249.79	US GPM
400 (16)	7926	497.9526	19918.1	497.9526	19918.1	US GPM
450 (18)	8806	630.2213	25208.84	630.2213	25208.84	US GPM
500 (20)	13209	778.051	31122.03	778.051	31122.03	US GPM
600 (24)	17612	1120.394	44815.73	1120.394	44815.73	US GPM
700 (28)	19813	1524.98	60999.19	1524.98	60999.19	US GPM
750 (30)	22015	1750.615	70024.58	1750.615	70024.58	US GPM
800 (32)	3082	1991.811	79672.4	1991.811	79672.41	US GPM
900 (36)	39626	2520.885	100835.3	2520.885	100835.3	US GPM
1000 (40)	52835	3112.204	124488.1	3112.204	124488.1	US GPM
1050 (42)	52835	3112.204	137248.1	3112.204	124488.1	US GPM
1100 (44)	61641	3765.767	150630.6	3765.767	150630.6	US GPM
1200 (48)	66044	4481.574	179262.9	4481.574	179262.9	US GPM
1400 (54)	110072	-	-	6099.92	243996.7	US GPM
1500 (60)	1320867	-	-	7002.459	280098.3	US GPM
1600 (66)	154101	-	-	7967.242	318689.6	US GPM

DN	$Q_{max.}$					
	Factory setting*	MAG 5100 W (Order no. 7ME6520)		MAG 1100, MAG 1100 F, 5100 W (Order no. 7ME6580) MAG 3100, 3100 P		unit
mm (inch)		min.	max.	min.	max.	
1800 (72)	176115	-	-	10083.54	403341.5	US GPM
2000 (78)	198130	-	-	12448.82	497952.5	US GPM
2200 (90)	220144	-	-	15063.07	602522.6	
	242158	-		17926.3	717051.7	
2600 (102)	264173	-	-	21038.5	841539.8	
2800 (114)	286187	-	-	24399.68	975987	
3000 (120)	308201	-	-	28009.84	1120393	

* Factory setting sets Qmax to a metric unit (see previous table). The values here are converted to rounded off US GPM.

B.4 50 Hz Dimension dependent batch and pulse output settings

50 Hz Dimension dependent factory settings MAG 1100, MAG1100F, MAG 3100, MAG 3100 P and MAG 5100W with ½" NPT cable glands

6DN	Volume/pulse or batch quantity*				Factory setting		
	MAG 5100 W (Order no. 7ME6520)		MAG 1100, MAG 1100 F, 5100 W (Order no. 7ME6580) MAG 3100, 3100 P		Volume/ pulse & batch amount	Pulse & batch unit	Totalizer unit
mm (inch)	min.	max.	min.	max.			
2 ($^1/_{12}$)	-	-	3.61466 µl	94.75103 l	0.1	ml	ml
3 ($^1/_8$)	-	-	5.890487 µl	154.4155 l	0.1	ml	ml
6 ($^1/_4$)	-	-	23.56195 µl	617.6622 l	1	l	l
10 ($^3/_8$)	-	-	65.44985 µl	1.715728 m^3	1	l	l
15 (½)	-	-	147.2622 µl	3.860389 m^3	1	l	l
25 (1)	409.0616 µl	10.7233 m^3	409.0616 µl	10.7233 m^3	10	l	l**
40 (1½)	1.047198 ml	27.45165 m^3	1.047198 ml	27.45165 m^3	10	l	l**
50 (2)	1.457896 ml	38.21785 m^3	1.636247 ml	42.89321 m^3	10	l	l**
65 (2½)	2.31452 ml	60.67373 m^3	2.765257 ml	72.48952 m^3	100	l	l**
80 (3)	3.70708 ml	97.17886 m^3	4.188791 ml	109.8066 m^3	100	l	l**
100(4)	5.789039 ml	151.7561 m^3	6.544985 ml	171.5728 m^3	100	l	l**
125 (5)	9.265244 ml	242.8828 m^3	10.22654 ml	268.0825 m^3	100	l	m^3
150 (6)	14.57896 ml	382.1785 m^3	14.72622 ml	386.0389 m^3	100	l	m^3
200 (8)	23.09071 ml	605.309 m^3	26.17994 ml	686.2913 m^3	1	m^3	m^3

6DN	Volume/pulse or batch quantity*				Factory setting		
	MAG 5100 W (Order no. 7ME6520)		MAG 1100, MAG 1100 F, 5100 W (Order no. 7ME6580) MAG 3100, 3100 P		Volume/ pulse & batch amount	Pulse & batch unit	Totalizer unit
mm (inch)	min.	max.	min.	max.			
250 (10)	37.04053 ml	970.995 m^3	40.90616 ml	1072.33 m^3	1	m^3	m^3
300 (12)	57.87403 ml	1517.132 m^3	58.90487 ml	1544.155 m^3	1	m^3	m^3
350 (14)	80.17607 ml	2101.767 m^3	80.17607 ml	210.7671 m^3	1	m^3	m^3
400 (16)	104.7198 ml	2745.165 m^3	104.7198 ml	2745.165 m^3	1	m^3	m^3
450 (18)	132.536 ml	3474.35 m^3	132.536 ml	3474.35 m^3	1	m^3	m^3
500 (20)	163.6247 ml	4289.321 m^3	163.6247 ml	4289.321 m^3	10	m^3	m^3
600 (24)	235.6195 ml	6176.622 m^3	235.6195 ml	6176.622 m^3	10	m^3	m^3
700 (28)	320.7043 ml	8407.069 m^3	320.7143 ml	8407.069 m^3	10	m^3	m^3
750 (30)	368.1554 ml	9650.972 m^3	368.1554 ml	9650.972 m^3	10	m^3	m^3
800 (32)	418.8791 ml	10980.66 m^3	418.8791 ml	10980.66 m^3	10	m^3	m^3
900 (36)	530.1438 ml	13897.4 m^3	530.1438 ml	13897.4 m^3	10	m^3	m^3
1000 (40)	654.4985 ml	17157.28 m^3	654.4985 ml	17157.28 m^3	10	m^3	m^3
1050 (42)	654.4985 ml	17157.28 m^3	654.4985 ml	17157.28 m^3	10	m^3	m^3
1100 (44)	79.94321 ml	20760.31 m^3	791.9432 ml	20760.31 m^3	10	m^3	m^3
1200 (48)	942.4778 ml	24706.48 m^3	942.4778 ml	24706.48 m^3	10	m^3	m^3
1400 (54)	-	-	1.282817 l	33628.27 m^3	10	m^3	m^3
1500 (60)	-	-	1.472622 l	38603.89 m^3	10	m^3	m^3
1600 (66)	-	-	1.675517 l	43922.64 m^3	10	m^3	m^3
1800 (72)	-	-	2.120576 l	55589.6 m^3	10	m^3	m^3
2000 (78)	-	-	2.617994 l	68629.13 m^3	10	m^3	m^3
2200 (90)	-	-	3.167773 l	83041.25 m^3	10	m^3	m^3
2400 (96)	-	-	3.769912 l	98825.9 m^3	10	m^3	m^3
2600 (102)	-	-	4.4241 l	115983. m^3	10	m^3	m^3
2800 (114)	-	-	5.131268 l	134513.1 m^3	10	m^3	m^3
3000 (120)	-	-	5.890487 l	154415.5 m^3	10	m^3	m^3

* The min. and max. amount values show mathematical values and do not indicate measurement accuracy.

** For CT devices the totalizer 1 unit is in m^3

B.5 60 Hz Dimension dependent batch and pulse output settings

60 Hz Dimension dependent factory settings MAG 1100, MAG1100F, MAG 3100, MAG 3100 P and MAG 5100W with ½" NPT cable glands

DN	Volume/pulse or batch quantity			
	MAG 5100 W (Order no. 7ME6520)		MAG 1100, MAG 1100 F, 5100 W (Order no. 7ME6580) MAG 3100, 3100 P	
mm (inch)	US G min.	US G max.	US G min.	US G max.
2 (1/12)	-	-	0.00000095484069	25.03057
3 (1/8)	-	-	0.000001556102	40.79227
6 (1/4)	-	-	0.000006224408	163.1691
10 (3/8)	-	-	0.00001729003	453.2475
15 (½)	-	-	0.00003890255	1019.806
25 (1)	0.0001080627	2832.796	0.0001080627	2832.796
40 (1½)	0.0002766404	7251.96	0.0002766404	7251.96
50 (2)	0.0003851353	10096.08	0.0004322506	11331.18
65 (2½)	0.0006114314	16028.3	0.0007305034	19149.7
80 (3)	0.0009793068	25671.93	0.001106562	29007.84
100(4)	0.001529303	40089.74	0.001729003	45324.75
125 (5)	0.002447619	64162.85	0.002701566	70819.92
150 (6)	0.003851353	100960.8	0.003890255	101980.6
200 (8)	0.00609992	159905.7	0.006916009	181299
250 (10)	0.009785071	256509.7	0.01080627	283279.6
300 (12)	0.01528871	400784.1	0.01556102	407922.7
350 (14)	0.02118028	555228.2	0.02118028	555228.2
400 (16)	0.02766404	725196	0.02766404	725196
450 (18)	0.0350123	917826.2	0.0350123	917826.2
500 (20)	0.04322506	1133118	0.04322506	1133118
600 (24)	0.06224408	1631691	0.06224408	1631691
700 (28)	0.0847211	2220912	0.0847211	2220912
750 (30)	0.09725637	2549517	0.09725637	2549517
800 (32)	0.1106562	2900784	0.1106562	2900784
900 (36)	0.1400492	3671304	0.1400492	3671304
1000 (40)	0.1729003	4532475	0.1729003	4532475
1050 (42)	0.1729003	4532475	0.1729003	4532475
1100 (44)	0.2092093	5484294	0.2092093	5484294
1200 (48)	0.2489763	6526764	0.2489763	6526764
1400 (54)	-	-	0.3388844	8883651
1500 (60)	-	-	0.3890255	10198060
1600 (66)	-	-	0.4426246	11603130
1800 (72)	-	-	0.5601967	14685210

DN	Volume/pulse or batch quantity			
	MAG 5100 W (Order no. 7ME6520)		MAG 1100, MAG 1100 F, 5100 W (Order no. 7ME6580) MAG 3100, 3100 P	
mm (inch)	US G min.	US G max.	US G min.	US G max.
2000 (78)	-	-	0.6916009	18129900
2200 (90)			0.836837	21937170
2400 (96)			0.995906	26107050
2600 (102)			1.168806	30639530
2800 (114)			1.355538	35534600
3000 (120)			1.556102	40792270

Approvals/Certificates

C

All certificates are posted on the Internet. Additionally, the CE Declaration of Conformity as well as ATEX approvals are available on the SITRANS F literature CD-ROM.

Certificates (http://support.automation.siemens.com/WW/view/en/10806951/134200)

Index

A

Add-on module, 15
Add-on modules
    Electrical connection:Add-on modules, 38
Alarm differentiation, 47
Alarm level, 47

C

Communication module, (See Add-on module)
Compliance, 11
Contact person, 9
Customer Support Hotline, 58

D

Decontamination, 59
Device
    Identification, 8
    Inspection, 7
Diagnostic functions, 53

E

Electrical connection, 38
Error handling, 53

H

Hotline, 58

I

Installation
    Indoor/outdoor, 19
Internet
    Contact person, 9, 59
    Flow documentation, 9
    Support, 59
Introduction, 7

L

Laws and directives, 11

M

Mains supply, 35
Maintenance, 57

P

Protective conductor terminal, 35
Protective earth, 35

R

Recalibration, 60
Repair, 58
Return procedures, 59

S

Safety
    Instrument safety standards, 11
Safety notes, 11
Service, 58, 59
Support, 59
System components, 15

W

Wire insulation, 35

For more information

www.siemens.com/flow

Siemens A/S
Flow Instruments
Nordborgvej 81
DK-6430 Nordborg

Subject to change without prior notice
Order No.: A5E02338368
Lit. No.: A5E02338368-002
© Siemens AG 12.2013

A5E02338368

www.siemens.com/processautomation

AC & DC Motor Installation & Maintenance

Safety Notice: Be sure to read and understand all of the Safety Notice statements in MN408 or Product Specific manual for your motor. A copy is available at: http://www.baldor.com/support/product_manuals.asp

ACCEPTANCE
Thoroughly inspect this equipment before accepting shipment from the transportation company. If any damage or shortage is discovered do not accept until noted on the freight bill. Report all damage to the freight carrier.

SAFETY
Eye bolts, lifting lugs or lifting openings, if provided, are intended only for lifting the motor and motor mounted standard accessories not exceeding, in total 30% of the motor weight. These lifting provisions should never be used when lifting or handling the motor and driven equipment. Eye bolt lifting capacity rating is based on a lifting alignment coincident with eye bolt center line. Eye bolt capacity reduces as deviation from this alignment is increased. Be sure eye bolts are tight and prevented from turning before lifting.

INSTALLATION OUTSIDE THE USA:
Refer to MN408 and MN1383 for Compliance with European Directives. Copies are available at:
http://www.baldor.com/support/product_manuals.asp

MOTOR ENCLOSURE
ODP, Open drip proof motors are intended for use in clean, dry locations with adequate supply of cooling air. These motors should not be used in the presence of flammable or combustible materials. Open motors can emit flame and/or molten metal in the event of insulation failure. TEFC, totally enclosed motors are intended for use where moisture, dirt and/or corrosive materials are present in indoor and outdoor locations.
Explosion protected motors, as indicated by a Nationally Recognized Testing Laboratory Certification mark and marking with Class, Division and Temperature Code are intended for installation in hazardous locations as described in Article 500 of the NEC. Refer to MN408 for more details.

MOUNTING
Foot mounted machines should be mounted to a rigid foundation to prevent excessive vibration. Shims may be used if location is uneven.

Flange mounted machines should be properly seated and aligned. Note: If improper rotation direction is detrimental to the load, check rotation direction prior to coupling the load to the motor shaft.
For V-belt drive, mount the sheave pulley close to the motor housing. Allow clearance for end to end movement of the motor shaft. Do not overtighten belts as this may cause premature bearing failure or shaft breakage.
Direct coupled machines should be carefully aligned and the shaft should rotate freely without binding.

GENERAL
The user must select a motor starter and overcurrent protection suitable for this motor and its application. Consult motor starter application data as well as the National Electric Code and/or applicable local codes. Special motors for use by United States Government including special specifications, master plans, etc. refer to the applicable master plans and specifications involved. On motors received from the factory with the shaft blocked, remove blocking before operating the motor. If motor is to be reshipped alone or installed to another piece of equipment, the shaft block must be installed to prevent axial movement and prevent brinelling of the bearings during shipment.

TESTING
If the motor has been in storage for an extensive period or has been subjected to adverse moisture conditions, check the motor insulation resistance with a meg ohm meter. Depending on storage conditions it may be necessary to regrease or change rusted bearings. Contact Baldor District Office if resistance is less than 5 meg ohms.

WARNING: Do not touch electrical connections before you first ensure that power has been disconnected. Electrical shock can cause serious or fatal injury.

WARNING: Be sure the system is properly grounded before applying power. Electrical shock can cause serious or fatal injury.

INSTALLATION
This motor must be installed in accordance with National Electric Code, NEMA MG-2, IEC standards or local codes.

WIRING
Connect the motor as shown in the connection diagrams. If this motor is installed as part of a motor control drive system, connect and protect the motor according to the control manufacturers diagrams. Refer to MN408 for additional details on lead marking. The wiring, fusing and grounding must comply with the National Electrical Code or IEC and local codes. When the motor is connected to the load for proper direction of rotation and started, it should start quickly and run smoothly. If not, stop the motor immediately and determine the cause. Possible causes are: low voltage at the motor, motor connections are not correct or the load is too heavy. Check the motor current after a few minutes of operation and compare the measured current with the nameplate rating.

GROUNDING
Ground the motor according to NEC and local codes. In the USA consult the National Electrical Code, Article 430 for information on grounding of motors and generators, and Article 250 for general information on grounding. In making the ground connection, the installer should make certain that there is a solid and permanent metallic connection between the ground point, the motor or generator terminal housing, and the motor or generator frame. In non-USA locations consult the appropriate national or local code applicable.

ADJUSTMENT
The neutral is adjustable on some DC motors. AC motors have no adjustable parts.

Noise
For specific sound power or pressure level information, contact your local Baldor representative.

VIBRATION
This motor is balanced to NEMA MG1, Part 7 standard.

BRUSHES (DC Motors)
Periodically, the brushes should be inspected and all brush dust blown out of the motor. If a brush is worn 1/2, (length specified in renewal parts data), replace the brushes.

WARNING: Guards must be installed for rotating parts such as couplings, pulleys, external fans, and unused shaft extensions, should be permanently guarded to prevent accidental contact by personnel. Accidental contact with body parts or clothing can cause serious or fatal injury.

Reassemble and seat the new brushes using a brush seating stone. Be sure the rocker arm is set on the neutral mark.

INSPECTION

Before connecting the motor to an electrical supply, inspect for any damage resulting from shipment. Turn the shaft by hand to ensure free rotation. Motor leads must be isolated before the shaft will turn freely on permanent magnet motors.

DRAIN PLUGS

One or more condensation drain plugs are provided on each endplate for various motor mounting configurations. For Washdown and totally enclosed, fan cooled or non-ventilated motors, the plugs in the lowest portion of the ends shields should be removed for operation (unless the motor has special stainless steel drains). All drains are located in the lowest portion of the ends shields.

MOUNTING

Mount the motor on a foundation sufficiently rigid to prevent excessive vibration. Grease lubricated ball bearing motors may be mounted with the feet at any angle. After careful alignment, bolt motor securely in place. Use shim to fill any unevenness in the foundation. Motor feet should sit solidly on the foundation before mounting bolts are tightened.

IP (Ingress Protection)

IP designations include two numerals, the first characteristic numeral is for ingress solid bodies and from dust. The second for ingress protection from liquid - water. Motors marked less than IP23 require additional protection from water.

GUARDING

After motor installation is complete, a guard of suitable dimensions must be constructed and installed around the motor/gearmotor. This guard must prevent personnel from coming in contact with any moving parts of the motor or drive assembly but must allow sufficient cooling air to pass over the motor. If a motor mounted brake is installed, provide proper safeguards for personnel in case of brake failure. Brush inspection plates and electrical connection cover plates or lids, must be installed before operating the motor.

STARTING

Before starting motor remove all unused shaft keys and loose rotating parts to prevent them from flying off. Check direction of rotation before coupling motor to load. The motor should start quickly and run smoothly and with little noise. If the motor should fail to start the load may be too great for the motor, the voltage is low or the motor has been miswired. In any case immediately shut motor off and investigate the cause.

ROTATION

To reverse the direction of rotation, disconnect and lockout power and interchange any two of the three AC power leads for three phase motors. For two-phase four wire, disconnect and lockout power and interchange the AC line leads on any one phase. For two phase three wire, disconnect and lockout power and interchange phase one and phase two AC line leads.

Maintenance Procedures

WARNING: Do not touch electrical connections before you first ensure that power has been disconnected. Electrical shock can cause serious or fatal injury.

WARNING: Surface temperatures of motor enclosures may reach temperatures which can cause discomfort or injury to personnel accidentally coming into contact with hot surfaces. Protection should be provided by the user to protect against accidental contact with hot surfaces. Failure to observe this precaution could result in bodily injury.

Lubrication Information

Refer to motor nameplate for recommended lubricant. If none is shown, the recommended lubricant for anti-friction bearings (-15°F to 120°) is POLYREX EM. For Min Start Temp -100°F use AEROSHELL #7. For roller bearings is ExxonMobil SHC-220.

Relubrication Intervals
(For motors with regrease capability)

New motors that have been stored for a year or more should be relubricated. Lubrication is also recommended at Table 1 intervals.

LUBRICATION INSTRUCTIONS

Cleanliness is important in lubrication. Any grease used to lubricate anti friction bearings should be fresh and free from contamination. Properly clean the grease inlet area of the motor to prevent grease contamination.

1. Select service conditions from Table 2.
2. Select lubrication interval (Table 1).
3. Adjust lubrication interval with multiplier from Table 3.
4. Select volume of grease from Table 4.

LUBRICATION PROCEDURE

Bearings should be lubricated while stationary and the motor is warm.

1. Locate the grease inlet, clean the area, and replace the pipe plug with a grease fitting.
2. Locate and remove the grease drain plug, if provided.
3. Add the recommended volume of the recommended grease.
4. Replace the grease inlet plug and run the motor for 15 minutes.
5. Replace the grease drain plug.

SPECIAL APPLICATIONS

For special temperature applications, consult your Baldor District Office.

Relubrication Intervals

Recommended relubrication intervals are shown in Table 1. It is important to realize that the recommended intervals of Table 2 are based on average use. Refer to additional information contained in Tables 2, 3 and 4.

Table1 Relubrication Interval

NEMA (IEC) Frame Size	Rated Speed (RPM)			
	3600	1800	1200	900
Up to 210 incl. (132)	5500Hrs.	12000Hrs.	18000Hrs.	22000Hrs.
Over 210 to 280 incl. (180)	3600Hrs.	9500Hrs.	15000Hrs.	18000Hrs.
Over 280 to 360 incl. (225)	2200Hrs.	7400Hrs.	12000Hrs.	15000Hrs.
Over 360 to 5800 incl. (400)	2200Hrs.	3500Hrs.	7400Hrs.	10500Hrs.

* Relubrication intervals are for ball bearings.
For vertically mounted motors and roller bearings, divide the relubrication interval by 2.

** For motors operating at speeds greater than 3600 RPM, contact Baldor for relubrication recommendations.

Table2 Service Conditions

Severity of Service	Hours per day of Operation	Ambient Temperature Maximum	Atmospheric Contamination
Standard	8	40° C	Clean, Little Corrosion
Severe	16 Plus	50° C	Moderate dirt, Corrosion
Extreme	16 Plus	>50° C* or Class H Insulation	Severe dirt, Abrasive dust, Corrosion, Heavy Shock or Vibration
Low Temperature		<-29 ° C **	

* Special high temperature grease is recommended (Dow Corning DC44).

** Special low temperature grease is recommended (Aeroshell 7).

Note: Different grease types are generally incompatible and should not be mixed. Mixing different types can cause lubricant and bearing failure. Thoroughly clean bearing and cavity before changing grease type.

Table3 Lubrication Interval Multiplier

Severity of Service	Multiplier
Standard	1.0
Severe	0.5
Extreme	0.1
Low Temperature	1.0

Some motor designs use different bearings on each motor end. This is normally indicated on the motor nameplate. In this case, the larger bearing is installed on the motor Drive endplate. For best relubrication results, only use the appropriate amount of grease for each bearing size (not the same for both).

Table4 Amount of Grease to Add

Frame Size NEMA (IEC)	Bearing Description (These are the "Large" bearings (Shaft End) in each frame size)			
	Bearing	Weight of Grease to add * oz (Grams)	Volume of grease to be added	
			in^3	teaspoon
56 to 140 (90)	6203	0.08 (2.4)	0.15	0.5
140 (90)	6205	0.15 (3.9)	0.2	0.8
180 (100–112)	6206	0.19 (5.0)	0.3	1.0
210 (132)	6307	0.30 (8.4)	0.6	2.0
250 (160)	6309	0.47 (12.5)	0.7	2.5
280 (180)	6311	0.61 (17)	1.2	3.9
320 (200)	6312	0.76 (20.1)	1.2	4.0
360 (225)	6313	0.81 (23)	1.5	5.2
400 (250)	6316	1.25 (33)	2.0	6.6
440 (280)	6318	1.52(40)	2.5	8.2
440 (280)	6319	2.12 (60)	4.1	13.4
5000 to 5800 (315–400)	6328	4.70 (130)	9.2	30.0
5000 to 5800 (315–400)	NU328	4.70 (130)	9.2	30.0
360 to 449 (225–280)	NU319	2.12 (60)	4.1	13.4
AC Induction Servo				
76 Frame 180 (112)	6207	0.22 (6.1)	0.44	1.4
77 Frame 210 (132)	6210	0.32 (9.0)	0.64	2.1
80 Frame 250(160)	6213	0.49 (14.0)	0.99	3.3

Typical IEC vs NEMA Lead Marking

Single Phase Non-Reversible
Refer to the connection diagram provided on the Baldor motor.

Single Phase Reversible

Dual Voltage Reversible

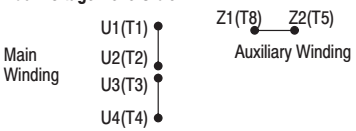

DC Motors
Lead markings can be translated between IEC and NEMA designations as follows:

	NEMA	IEC
Armature	A1, A2	A1, A2
Series Field	S1, S2	D1, D2
Shunt Field	F1, F2	E1, E2

Refer to the connection diagram provided on the Baldor motor.

Three Phase
For single winding 3 phase motors, lead markings can be directly translated between IEC and NEMA designations. For these motors, the lead markings are:

U1=T1	U2=T4	U3=T7	U4=T10
V1=T2	V2=T5	V3=T8	V4=T11
W1=T3	W2=T6	W3=T9	W4=T12

Refer to the connection diagram provided on the Baldor motor. Some examples are as follows:

Three Leads

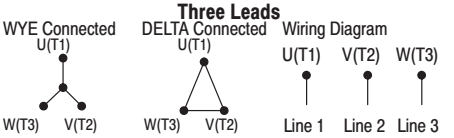

Six Leads

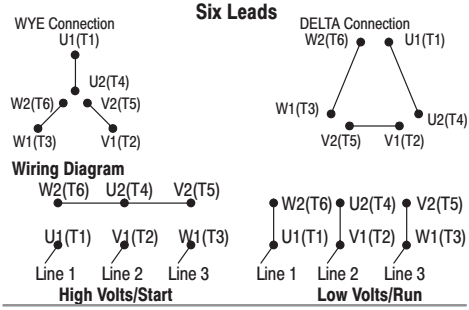

MN416A01-1114

BALDOR®
A MEMBER OF THE ABB GROUP
P.O. Box 2400 Fort Smith, AR 72902-2400 USA Ph: (1) 479.646.4711, Fax: (1) 479.648.5792
www.baldor.com

© Baldor Electric Company
All rights reserved. Printed in USA
MN416A01
11/14

User Manual

Allen-Bradley

PowerFlex 520-Series Adjustable Frequency AC Drive

PowerFlex 523 Catalog Number 25A, Series B
PowerFlex 525 Catalog Number 25B

Original Instructions

Allen-Bradley • Rockwell Software

Rockwell Automation

Important User Information

Solid-state equipment has operational characteristics differing from those of electromechanical equipment. Safety Guidelines for the Application, Installation and Maintenance of Solid State Controls (publication SGI-1.1 available from your local Rockwell Automation® sales office or online at http://www.rockwellautomation.com/literature/) describes some important differences between solid-state equipment and hard-wired electromechanical devices. Because of this difference, and also because of the wide variety of uses for solid-state equipment, all persons responsible for applying this equipment must satisfy themselves that each intended application of this equipment is acceptable.

In no event will Rockwell Automation, Inc. be responsible or liable for indirect or consequential damages resulting from the use or application of this equipment.

The examples and diagrams in this manual are included solely for illustrative purposes. Because of the many variables and requirements associated with any particular installation, Rockwell Automation, Inc. cannot assume responsibility or liability for actual use based on the examples and diagrams.

No patent liability is assumed by Rockwell Automation, Inc. with respect to use of information, circuits, equipment, or software described in this manual.

Reproduction of the contents of this manual, in whole or in part, without written permission of Rockwell Automation, Inc., is prohibited.

Throughout this manual, when necessary, we use notes to make you aware of safety considerations.

	WARNING: Identifies information about practices or circumstances that can cause an explosion in a hazardous environment, which may lead to personal injury or death, property damage, or economic loss.
	ATTENTION: Identifies information about practices or circumstances that can lead to personal injury or death, property damage, or economic loss. Attentions help you identify a hazard, avoid a hazard, and recognize the consequence.
	SHOCK HAZARD: Labels may be on or inside the equipment, for example, a drive or motor, to alert people that dangerous voltage may be present.
	BURN HAZARD: Labels may be on or inside the equipment, for example, a drive or motor, to alert people that surfaces may reach dangerous temperatures.
	ARC FLASH HAZARD: Labels may be on or inside the equipment, for example, a motor control center, to alert people to potential Arc Flash. Arc Flash will cause severe injury or death. Wear proper Personal Protective Equipment (PPE). Follow ALL Regulatory requirements for safe work practices and for Personal Protective Equipment (PPE).
IMPORTANT	Identifies information that is critical for successful application and understanding of the product.

Allen-Bradley, Rockwell Automation, Rockwell Software, PowerFlex, Connected Components Workbench, Studio 5000, Studio 5000 Logix Designer, DriveTools SP, AppView, CustomView, QuickView, MainsFree Programming, PointStop, and TechConnect are trademarks of Rockwell Automation, Inc.

Trademarks not belonging to Rockwell Automation are property of their respective companies.

Important User Information 2

Summary of Changes

New and Updated Information. 7

Preface

Overview

Who Should Use this Manual 9
Recommended Documentation 9
Manual Conventions 10
Drive Frame Sizes 11
General Precautions 12
Catalog Number Explanation 13

Chapter 1

Installation/Wiring

Mounting Considerations. 15
AC Supply Source Considerations 19
General Grounding Requirements 20
Fuses and Circuit Breakers 23
Power and Control Module 28
Control Module Cover 31
Power Module Terminal Guard 31
Power Wiring. 32
Power Terminal Block 35
Common Bus/Precharge Notes 36
I/O Wiring 36
Control I/O Terminal Block 37
Start and Speed Reference Control 49
CE Conformity 52

Chapter 2

Start Up

Prepare for Drive Start-Up 59
Display and Control Keys 62
Viewing and Editing Parameters 63
Drive Programming Tools 64
Language Support 64
Smart Start-Up with Basic Program Group Parameters 65
LCD Display with QuickView Technology. 67
Using the USB Port 67

Chapter 3

Programming and Parameters

About Parameters 71
Parameter Groups 73
Basic Display Group 78
Basic Program Group 83
Terminal Block Group 89
Communications Group 101
Logic Group 107
Advanced Display Group 110
Advanced Program Group 115
Network Parameter Group 141
Modified Parameter Group 142
Fault and Diagnostic Group 142
AppView Parameter Groups 150
CustomView Parameter Group 151
Parameter Cross Reference by Name 152

Chapter 4

Troubleshooting

Drive Status 157
Faults 157
Fault Descriptions 159
Common Symptoms and Corrective Actions 162

Appendix A

Supplemental Drive Information

Certifications 167
Environmental Specifications 168
Technical Specifications 169
Power Specifications 172

Appendix B

Accessories and Dimensions

Product Selection 175
Product Dimensions 185
Optional Accessories and Kits 198

Appendix C

RS485 (DSI) Protocol

Network Wiring 201
Parameter Configuration 202
Supported Modbus Function Codes 203
Writing (06) Logic Command Data 203
Writing (06) Comm Frequency Command 205
Reading (03) Logic Status Data 205
Reading (03) Drive Error Codes 207
Reading (03) Drive Operational Values 208
Reading (03) and Writing (06) Drive Parameters 208
Additional Information 208

Appendix D

Velocity StepLogic, Basic Logic and Timer/Counter Functions

Velocity StepLogic Using Timed Steps 210
Velocity StepLogic Using Basic Logic Functions 210
Timer Function 211
Counter Function 212
Velocity StepLogic Parameters 213

Appendix E

Encoder/Pulse Train Usage and Position StepLogic Application

Encoder and Pulse Train Usage 215
Wiring Notes 216
Determine Encoder Pulse Per Revolution (PPR) Specification Based on Speed Resolution 217
Positioning Overview 218
Common Guidelines for All Applications 218
Positioning Operation 220
Homing Routine 223
Encoder and Position Feedback 224
Use Over Communications 225
Setup Notes 226

Appendix F

PID Set Up

PID Loop 227
PID Reference and Feedback 229
Analog PID Reference Signals 230

Appendix G

Safe-Torque-Off Function

PowerFlex 525 Safe-Torque-Off Overview 235
EC Type Examination Certification 236
EMC Instructions 236
Using PowerFlex 525 Safe-Torque-Off 236
Safety Concept 237
Enabling PowerFlex 525 Safe-Torque-Off 239
Wiring 239
PowerFlex 525 Safe-Torque-Off Operation 239
Verify Operation 240
Connection Examples 241
PowerFlex 525 Certification for Safe-Torque-Off 245

Appendix H

EtherNet/IP

Establishing A Connection With EtherNet/IP 247
Ground Connections for EtherNet/IP Networks 248

Appendix I

Control Diagrams

Induction Motor Tuning Diagrams 249
Adjusting Speed Control Parameters 250

Appendix J

PowerFlex 525 PM Motor Configuration

Download Files 252
Automatic Configuration Using Drive Startup Wizard 254
Manual Configuration Using Drive Keypad 261
Additional PM Motor Configuration 262
Optional Parameter Adjustments for Optimum Performance 266

Index

This manual contains new and updated information.

New and Updated Information

This table contains the changes made to this revision.

Topic	Page
Added footnote to indicate that circuit breaker selection is not available for certain drive ratings.	24...27
Added PowerFlex 523 series B to Control I/O Wiring Block Diagram.	38
Added PowerFlex 523 series B to Control I/O Terminal Designations.	40
Added PowerFlex 523 series B I/O wiring examples for analog input and analog output.	45
Added note to PowerFlex 525 I/O wiring example for pulse train input.	46
Added footnote to enum "4" for P053 [Reset to Defalts] under Smart Start-Up with Basic Program Group Parameters.	67
Added new sub topic for 32-bit parameters.	72
Added footnotes to parameters that are available in PowerFlex 523 FRN 3.xxx and later.	Chapter 3
Updated descriptions for parameters that are available in PowerFlex 523 FRN 3.xxx and later.	
Added formula for calculating scaled process value to parameter b010 [Process Display].	79
Added recommendation to perform rotate tune when using VVC mode to parameter P040 [Autotune].	85
Added footnote to indicate which settings are PowerFlex 525 only for parameter d394 [Dig Out Status].	114
Updated descriptions for parameters A465 [PID 1 Deadband] and A477 [PID 2 Deadband].	123
Added corrective action to fault F114 (uC Failure).	162
Added analog output to PowerFlex 523 drives.	171
Added new topic "Determine Encoder Pulse Per Revolution (PPR) Specification Based on Speed Resolution" to Appendix E.	217
Updated information to verify operation of the safety inputs in Appendix G.	240
General maintenance updates.	Throughout manual

Notes:

Overview

The purpose of this manual is to provide you with the basic information needed to install, start-up and troubleshoot the PowerFlex® 520-Series Adjustable Frequency AC Drive.

For information on…	See page…
Who Should Use this Manual	9
Recommended Documentation	9
Manual Conventions	10
Drive Frame Sizes	11
General Precautions	12
Catalog Number Explanation	13

Who Should Use this Manual

This manual is intended for qualified personnel. You must be able to program and operate Adjustable Frequency AC Drive devices. In addition, you must have an understanding of the parameter settings and functions.

Recommended Documentation

All the recommended documentation listed in this section is available online at http://www.rockwellautomation.com/literature/.

The following publications provide general drive information:

Title	Publication
Wiring and Grounding Guidelines for Pulse Width Modulated (PWM) AC Drives	DRIVES-IN001
Preventive Maintenance of Industrial Control and Drive System Equipment	DRIVES-TD001
Safety Guidelines for the Application, Installation and Maintenance of Solid State Control	SGI-1.1
A Global Reference Guide for Reading Schematic Diagrams	100-2.10
Guarding Against Electrostatic Damage	8000-4.5.2

The following publications provide specific PowerFlex 520-Series information on drive installation, features, specifications, and service:

Title	Publication
PowerFlex 520-Series AC Drive Specifications	520-TD001
PowerFlex Dynamic Braking Resistor Calculator	PFLEX-AT001
PowerFlex AC Drives in Common Bus Configurations	DRIVES-AT002

The following publications provide specific Network Communications information:

Title	Publication
PowerFlex 525 Embedded EtherNet/IP Adapter	520COM-UM001
PowerFlex 25-COMM-D DeviceNet Adapter	520COM-UM002
PowerFlex 25-COMM-E2P Dual-Port EtherNet/IP Adapter	520COM-UM003
PowerFlex 25-COMM-P PROFIBUS DPV1 Adapter	520COM-UM004

Manual Conventions

- In this manual we refer to PowerFlex 520-Series Adjustable Frequency AC Drive as; drive, PowerFlex 520-series, PowerFlex 520-series drive or PowerFlex 520-series AC drive.
- Specific drives within the PowerFlex 520-series may be referred to as:
  – PowerFlex 523, PowerFlex 523 drive or PowerFlex 523 AC drive.
  – PowerFlex 525, PowerFlex 525 drive or PowerFlex 525 AC drive.
- Parameter numbers and names are shown in this format:

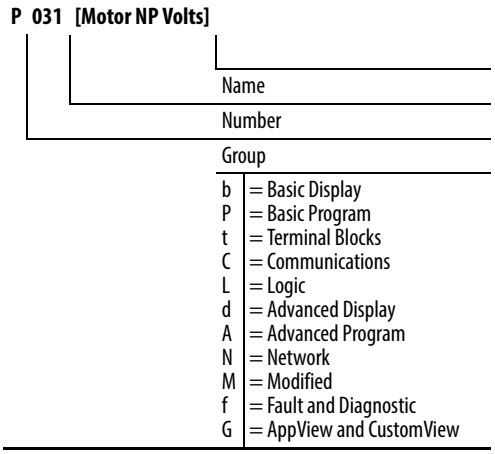

- The following words are used throughout the manual to describe an action:

Words	Meaning
Can	Possible, able to do something
Cannot	Not possible, not able to do something
May	Permitted, allowed
Must	Unavoidable, you must do this
Shall	Required and necessary
Should	Recommended
Should Not	Not Recommended

- The Studio 5000® Engineering and Design Environment combines engineering and design elements into a common environment. The first element in the Studio 5000 environment is the Logix Designer application. The Studio 5000 Logix Designer™ application is the rebranding of RSLogix™ 5000 software and will continue to be the product to program Logix 5000 controllers for discrete, process, batch, motion, safety, and drive-based solutions. The Studio 5000 environment is the foundation for the future of Rockwell Automation engineering design tools and capabilities. It is the one place for design engineers to develop all the elements of their control system.

Drive Frame Sizes

Similar PowerFlex 520-series drive sizes are grouped into frame sizes to simplify spare parts ordering, dimensioning, etc. A cross reference of drive catalog numbers and their respective frame sizes is provided in Appendix B.

General Precautions

ATTENTION: The drive contains high voltage capacitors which take time to discharge after removal of mains supply. After power has been removed from the drive, wait three minutes to make sure DC bus capacitors are discharged. After three minutes, verify AC voltage L1, L2, L3 (Line to Line and Line to Ground) to ensure mains power has been disconnected. Measure DC voltage across DC- and DC+ bus terminals to verify DC Bus has discharged to zero volts. Measure DC voltage from L1, L2, L3, T1, T2, T3 DC – and DC+ terminals to ground and keep the meter on the terminals until the voltage discharges to zero volts. The discharge process may take several minutes to reach zero volts. Darkened display LEDs is not an indication that capacitors have discharged to safe voltage levels.

ATTENTION: Only qualified personnel familiar with adjustable frequency AC drives and associated machinery should plan or implement the installation, start-up and subsequent maintenance of the system. Failure to comply may result in personal injury and/or equipment damage.

ATTENTION: This drive contains ESD (Electrostatic Discharge) sensitive parts and assemblies. Static control precautions are required when installing, testing, servicing or repairing this assembly. Component damage may result if ESD control procedures are not followed. If you are not familiar with static control procedures, reference A-B publication 8000-4.5.2, "Guarding Against Electrostatic Damage" or any other applicable ESD protection handbook.

ATTENTION: An incorrectly applied or installed drive can result in component damage or a reduction in product life. Wiring or application errors, such as undersizing the motor, incorrect or inadequate AC supply, or excessive ambient temperatures may result in malfunction of the system.

ATTENTION: The bus regulator function is extremely useful for preventing nuisance overvoltage faults resulting from aggressive decelerations, overhauling loads, and eccentric loads. However, it can also cause either of the following two conditions to occur.
1. Fast positive changes in input voltage or imbalanced input voltages can cause uncommanded positive speed changes;
2. Actual deceleration times can be longer than commanded deceleration times However, a "Stall Fault" is generated if the drive remains in this state for 1 minute. If this condition is unacceptable, the bus regulator must be disabled (see parameter A550 [Bus Reg Enable]). In addition, installing a properly sized dynamic brake resistor will provide proper stopping requirements based on braking resistor sizing.

ATTENTION: Risk of injury or equipment damage exists. Drive does not contain user-serviceable components. Do not disassemble drive chassis.

Catalog Number Explanation

1-3	4	5	6-8	9	10	11	12	13	14
25B	**–**	**B**	**2P3**	**N**	**1**	**1**	**4**	**–**	**–**
Drive	Dash	Voltage Rating	Rating	Enclosure	Reserved	Emission Class	Reserved	Dash	Dash

Code	Type
25A	PowerFlex 523
25B	PowerFlex 525

Code	Voltage	Phase
V	120V AC	1
A	240V AC	1
B	240V AC	3
D	480V AC	3
E	600V AC	3

Code	Enclosure
N	IP20 NEMA / Open

Code	Interface Module
1	Standard

Code	EMC Filter
0	No Filter
1	Filter

Code	Braking
4	Standard

Output Current @ 1 Phase, 100...120V Input						
Code	Amps	Frame	ND		HD	
			HP	kW	HP	kW
1P6[1]	1.6	A	0.25	0.2	0.25	0.2
2P5	2.5	A	0.5	0.4	0.5	0.4
4P8	4.8	B	1.0	0.75	1.0	0.75
6P0	6.0	B	1.5	1.1	1.5	1.1

Output Current @ 1 Phase, 200...240V Input						
Code	Amps	Frame	ND		HD	
			HP	kW	HP	kW
1P6[1]	1.6	A	0.25	0.2	0.25	0.2
2P5	2.5	A	0.5	0.4	0.5	0.4
4P8	4.8	A	1.0	0.75	1.0	0.75
8P0	8.0	B	2.0	1.5	2.0	1.5
011	11.0	B	3.0	2.2	3.0	2.2

Output Current @ 3Phase, 200...240V Input						
Code	Amps	Frame	ND		HD	
			HP	kW	HP	kW
1P6[1]	1.6	A	0.25	0.2	0.25	0.2
2P5	2.5	A	0.5	0.4	0.5	0.4
5P0	5.0	A	1.0	0.75	1.0	0.75
8P0	8.0	A	2.0	1.5	2.0	1.5
011	11.0	A	3.0	2.2	3.0	2.2
017	17.5	B	5.0	4.0	5.0	4.0
024	24.0	C	7.5	5.5	7.5	5.5
032	32.2	D	10.0	7.5	10.0	7.5
048[2]	48.3	E	15.0	11.0	10.0	7.5
062[2]	62.1	E	20.0	15.0	15.0	11.0

Output Current @ 3 Phase, 380...480V Input						
Code	Amps	Frame	ND		HD	
			HP	kW	HP	kW
1P4	1.4	A	0.5	0.4	0.5	0.4
2P3	2.3	A	1.0	0.75	1.0	0.75
4P0	4.0	A	2.0	1.5	2.0	1.5
6P0	6.0	A	3.0	2.2	3.0	2.2
010	10.5	B	5.0	4.0	5.0	4.0
013	13.0	C	7.5	5.5	7.5	5.5
017	17.0	C	10.0	7.5	10.0	7.5
024	24.0	D	15.0	11.0	15.0	11.0
030[2]	30.0	D	20.0	15.0	15.0	11.0
037[2]	37.0	E	25.0	18.5	20.0	15.0
043[2]	43.0	E	30.0	22.0	25.0	18.5

Output Current @ 3 Phase, 525...600V Input						
Code	Amps	Frame	ND		HD	
			HP	kW	HP	kW
0P9	0.9	A	0.5	0.4	0.5	0.4
1P7	1.7	A	1.0	0.75	1.0	0.75
3P0	3.0	A	2.0	1.5	2.0	1.5
4P2	4.2	A	3.0	2.2	3.0	2.2
6P6	6.6	B	5.0	4.0	5.0	4.0
9P9	9.9	C	7.5	5.5	7.5	5.5
012	12.0	C	10.0	7.5	10.0	7.5
019	19.0	D	15.0	11.0	15.0	11.0
022[2]	22.0	D	20.0	15.0	15.0	11.0
027[2]	27.0	E	25.0	18.5	20.0	15.0
032[2]	32.0	E	30.0	22.0	25.0	18.5

(1) This rating is only available for PowerFlex 523 drives.

(2) Normal and Heavy Duty ratings are available for this drive.

Notes:

Installation/Wiring

This chapter provides information on mounting and wiring the PowerFlex 520-series drives.

For information on...	See page...
Mounting Considerations	15
AC Supply Source Considerations	19
General Grounding Requirements	20
Fuses and Circuit Breakers	23
Power and Control Module	28
Control Module Cover	31
Power Module Terminal Guard	31
Power Wiring	32
Power Terminal Block	35
Common Bus/Precharge Notes	36
I/O Wiring	36
Control I/O Terminal Block	37
Start and Speed Reference Control	49
CE Conformity	52

Most start-up difficulties are the result of incorrect wiring. Every precaution must be taken to assure that the wiring is done as instructed. All items must be read and understood before the actual installation begins.

ATTENTION: The following information is merely a guide for proper installation. Rockwell Automation cannot assume responsibility for the compliance or the noncompliance to any code, national, local or otherwise for the proper installation of this drive or associated equipment. A hazard of personal injury and/or equipment damage exists if codes are ignored during installation.

Mounting Considerations

- Mount the drive upright on a flat, vertical and level surface.

Frame	Screw Size	Screw Torque
A	M5 (#10...24)	1.56...1.96 Nm (14...17 lb-in.)
B	M5 (#10...24)	1.56...1.96 Nm (14...17 lb-in.)
C	M5 (#10...24)	1.56...1.96 Nm (14...17 lb-in.)
D	M5 (#10...24)	2.45...2.94 Nm (22...26 lb-in.)
E	M8 (5/16 in.)	6.0...7.4 Nm (53...65 lb-in.)

- Protect the cooling fan by avoiding dust or metallic particles.

- Do not expose to a corrosive atmosphere.
- Protect from moisture and direct sunlight.

Minimum Mounting Clearances

See Appendix B for mounting dimensions.

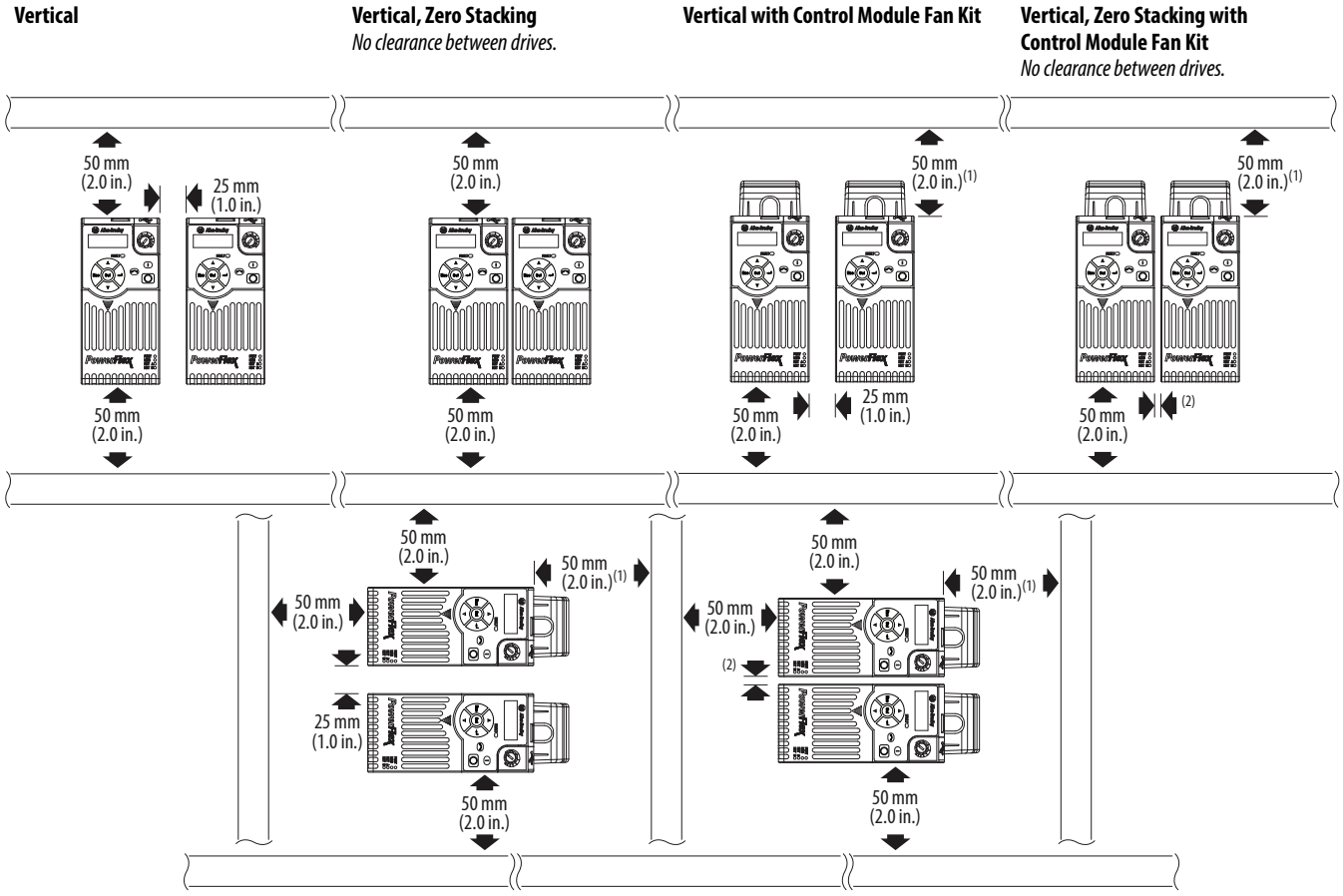

(1) For Frame E with Control Module Fan Kit only, clearance of 95 mm (3.7 in.) is required.
(2) For Frame E with Control Module Fan Kit only, clearance of 12 mm (0.5 in.) is required.

Ambient Operating Temperatures

See Appendix B for option kits.

Mounting	Enclosure Rating[1]	Ambient Temperature			
		Minimum	Maximum (No Derate)	Maximum (Derate)[2]	Maximum with Control Module Fan Kit (Derate)[3][5]
Vertical	IP 20/Open Type	-20 °C (-4 °F)	50 °C (122 °F)	60 °C (140 °F)	70 °C (158 °F)
	IP 30/NEMA 1/UL Type 1		45 °C (113 °F)	55 °C (131 °F)	–
Vertical, Zero Stacking	IP 20/Open Type		45 °C (113 °F)	55 °C (131 °F)	65 °C (149 °F)
	IP 30/NEMA 1/UL Type 1		40 °C (104 °F)	50 °C (122 °F)	–
Horizontal with Control Module Fan Kit[4][5]	IP 20/Open Type		50 °C (122 °F)	–	70 °C (158 °F)
Horizontal, Zero Stacking with Control Module Fan Kit[4][5]	IP 20/Open Type		45 °C (113 °F)	–	65 °C (149 °F)

(1) IP 30/NEMA 1/UL Type 1 rating requires installation of the PowerFlex 520-Series IP 30/NEMA 1/UL Type 1 option kit, catalog number 25-JBAx.
(2) For catalogs 25x-D1P4N104 and 25x-E0P9N104, the temperature listed under the Maximum (Derate) column is reduced by 5 °C (9 °F) for all mounting methods.
(3) For catalogs 25x-D1P4N104 and 25x-E0P9N104, the temperature listed under the Maximum with Control Module Fan Kit (Derate) column is reduced by 10 °C (18 °F) for vertical and vertical with zero stacking mounting methods only.
(4) Catalogs 25x-D1P4N104 and 25x-E0P9N104 cannot be mounted using either of the horizontal mounting methods.
(5) Requires installation of the PowerFlex 520-Series Control Module Fan Kit, catalog number 25-FANx-70C.

Current Derating Curves

Vertical Mounting

Single Drive

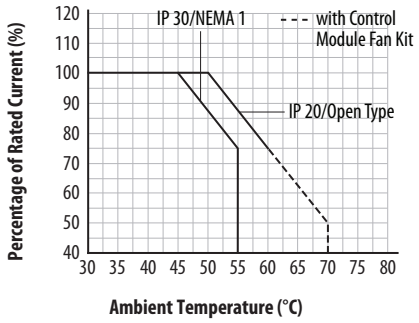

Zero Stacking

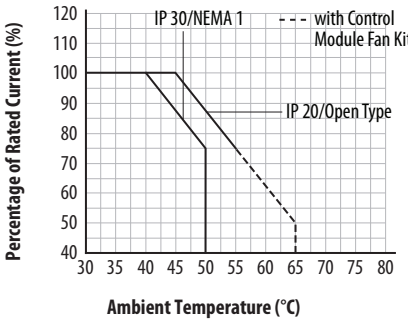

Horizontal/Floor Mounting

Single Drive

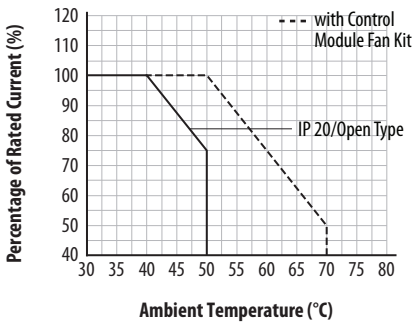

Zero Stacking

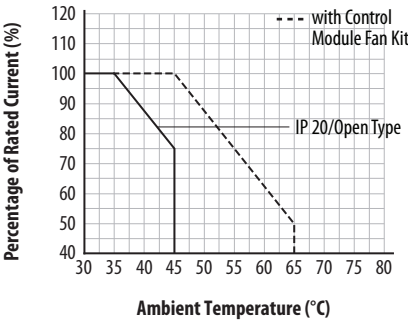

Derating Guidelines for High Altitude

The drive can be used without derating at a maximum altitude of 1000 m (3300 ft). If the drive is used above 1000 m (3300 ft):

- Derate the maximum ambient temperature by 5 °C (9 °F) for every additional 1000 m (3300 ft), subject to limits listed in the Altitude Limit (Based on Voltage) table below.
  Or
- Derate the output current by 10% for every additional 1000 m (3300 ft), up to 3000 m (9900 ft), subject to limits listed in the Altitude Limit (Based on Voltage) table below.

Altitude Limit (Based on Voltage)

Drive Rating	Center Ground (Wye Neutral)	Corner Ground, Impedance Ground, or Ungrounded
100...120V 1-Phase	6000 m	6000 m
200...240V 1-Phase	2000 m	2000 m
200...240V 3-Phase	6000 m	2000 m
380...480V 3-Phase	4000 m	2000 m
525...600V 3-Phase	2000 m	2000 m

High Altitude

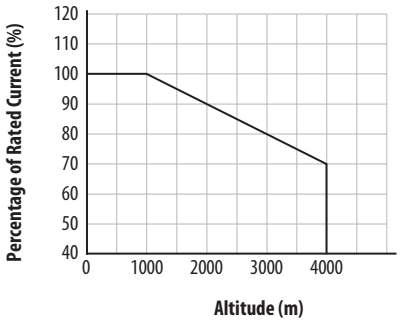

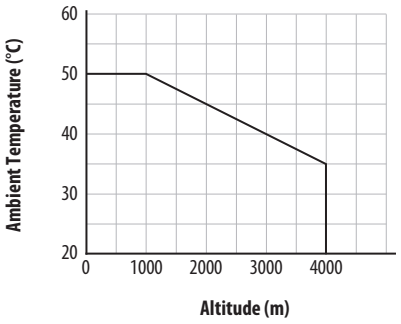

Debris Protection

Take precautions to prevent debris from falling through the vents of the drive housing during installation.

Storage

- Store within an ambient temperature range of -40...85°C(1).
- Store within a relative humidity range of 0...95%, noncondensing.
- Do not expose to a corrosive atmosphere.

(1) The maximum ambient temperature for storing a Frame E drive is 70 °C.

AC Supply Source Considerations

Ungrounded Distribution Systems

ATTENTION: PowerFlex 520-series drives contain protective MOVs that are referenced to ground. These devices must be disconnected if the drive is installed on an ungrounded or resistive grounded distribution system.

ATTENTION: Removing MOVs in drives with an embedded filter will also disconnect the filter capacitor from earth ground.

Disconnecting MOVs

To prevent drive damage, the MOVs connected to ground shall be disconnected if the drive is installed on an ungrounded distribution system (IT mains) where the line-to-ground voltages on any phase could exceed 125% of the nominal line-to-line voltage. To disconnect these devices, remove the jumper shown in the diagrams below.

1. Turn the screw counterclockwise to loosen.
2. Pull the jumper completely out of the drive chassis.
3. Tighten the screw to keep it in place.

Jumper Location (Typical)

Power Module

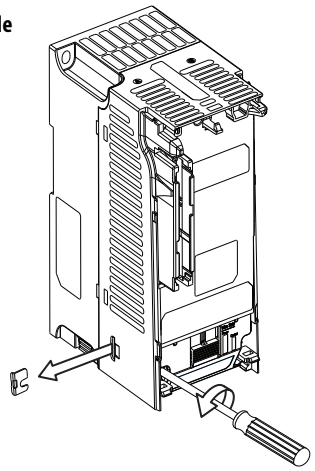

IMPORTANT Tighten screw after jumper removal.

Phase to Ground MOV Removal

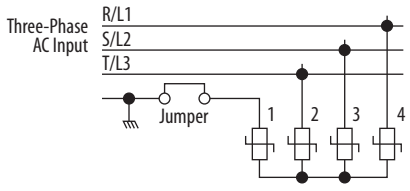

Input Power Conditioning

The drive is suitable for direct connection to input power within the rated voltage of the drive (see page 169). Listed in the Input Power Conditions table below are certain input power conditions which may cause component damage or reduction in product life. If any of these conditions exist, install one of the devices listed under the heading Corrective Action on the line side of the drive.

IMPORTANT Only one device per branch circuit is required. It should be mounted closest to the branch and sized to handle the total current of the branch circuit.

Input Power Conditions

Input Power Condition	Corrective Action
Low Line Impedance (less than 1% line reactance)	• Install Line Reactor(2) • or Isolation Transformer
Greater than 120 kVA supply transformer	
Line has power factor correction capacitors	• Install Line Reactor(2) • or Isolation Transformer
Line has frequent power interruptions	
Line has intermittent noise spikes in excess of 6000V (lightning)	
Phase to ground voltage exceeds 125% of normal line to line voltage	• Remove MOV jumper to ground. • or Install Isolation Transformer with grounded secondary if necessary.
Ungrounded distribution system	
B-phase grounded distribution system	
240V open delta configuration (stinger leg)(1)	• Install Line Reactor(2)

(1) For drives applied on an open delta with a middle phase grounded neutral system, the phase opposite the phase that is tapped in the middle to the neutral or earth is referred to as the "stinger leg," "high leg," "red leg," etc. This leg should be identified throughout the system with red or orange tape on the wire at each connection point. The stinger leg should be connected to the center Phase B on the reactor. See Bulletin 1321-3R Series Line Reactors on page 183 for specific line reactor part numbers.

(2) See Appendix B for accessory ordering information.

General Grounding Requirements

The drive Safety Ground - ⏚ (PE) must be connected to system ground. Ground impedance must conform to the requirements of national and local industrial safety regulations and/or electrical codes. The integrity of all ground connections should be periodically checked.

Typical Grounding

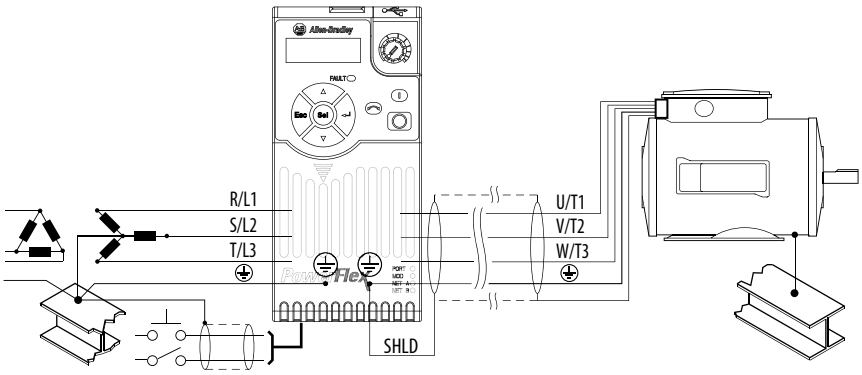

Ground Fault Monitoring

If a system ground fault monitor (RCD) is to be used, only Type B (adjustable) devices should be used to avoid nuisance tripping.

Safety Ground - ⏚ (PE)

This is the safety ground for the drive that is required by code. One of these points must be connected to adjacent building steel (girder, joist), a floor ground rod or bus bar. Grounding points must comply with national and local industrial safety regulations and/or electrical codes.

Network Ground

Connect terminal C1 to a clean earth ground when using a network with a star topology (EtherNet/IP) or daisy-chain (RS485). It is acceptable to ground both C1 and C2 terminals.

Connect terminal CS1 or CS2 to a clean ground when using a network with a ring topology (EtherNet/IP).

For more information on EtherNet/IP networks, see Ground Connections for EtherNet/IP Networks on page 248.

For more information on RS485 networks, see Network Wiring on page 201.

Motor Ground

The motor ground must be connected to one of the ground terminals on the drive.

Shield Termination - SHLD

Either of the safety ground terminals located on the power terminal block provides a grounding point for the motor cable shield. The **motor cable** shield connected to one of these terminals (drive end) should also be connected to the motor frame (motor end). Use a shield terminating or EMI clamp to connect the shield to the safety ground terminal. The earthing plate or conduit box option may be used with a cable clamp for a grounding point for the cable shield.

When shielded cable is used for **control and signal wiring**, the shield should be grounded at the source end only, not at the drive end.

RFI Filter Grounding

Using a drive with filter may result in relatively high ground leakage currents. Therefore, the **filter must only be used in installations with grounded AC supply systems and be permanently installed and solidly grounded** (bonded) to the building power distribution ground. Ensure that the incoming supply neutral is solidly connected (bonded) to the same building power distribution ground. Grounding must not rely on flexible cables and should not include any form of plug or socket that would permit inadvertent disconnection. Some local codes may require redundant ground connections. The integrity of all connections should be periodically checked.

Fuses and Circuit Breakers

The PowerFlex 520-series drive does not provide branch short circuit protection. This product should be installed with either input fuses or an input circuit breaker. National and local industrial safety regulations and/or electrical codes may determine additional requirements for these installations.

The tables found on pages 24...27 provide recommended AC line input fuse and circuit breaker information. See Fusing and Circuit Breakers below for UL and IEC requirements. Sizes listed are the recommended sizes based on 40 °C (104 °F) and the U.S. N.E.C. Other country, state or local codes may require different ratings.

Fusing

The recommended fuse types are listed in the tables found on pages 24...27. If available current ratings do not match those listed in the tables provided, choose the next higher fuse rating.

- IEC – BS88 (British Standard) Parts 1 & 2(1), EN60269-1, Parts 1 & 2, type GG or equivalent should be used.
- UL – UL Class CC, T, RK1, or J should be used.

Circuit Breakers

The "non-fuse" listings in the tables found on pages 24...27 include inverse time circuit breakers, instantaneous trip circuit breakers (motor circuit protectors) and 140M self-protected combination motor controllers. If one of these is chosen as the desired protection method, the following requirements apply:

- IEC – Both types of circuit breakers and 140M self-protected combination motor controllers are acceptable for IEC installations.
- UL – Only inverse time circuit breakers and the specified 140M self-protected combination motor controllers are acceptable for UL installations.

Bulletin 140M (Self-Protected Combination Controller)/UL489 Circuit Breakers

When using Bulletin 140M or UL489 rated circuit breakers, the guidelines listed below must be followed in order to meet the NEC requirements for branch circuit protection.

- Bulletin 140M can be used in single motor applications.
- Bulletin 140M can be used up stream from the drive **without** the need for fuses.

(1) Typical designations include, but may not be limited to the following; Parts 1 & 2: AC, AD, BC, BD, CD, DD, ED, EFS, EF, FF, FG, GF, GG, GH.

Fuses and Circuit Breakers for PowerFlex 520-Series Drives

100...120V 1-Phase Input Protection Devices – Frames A...B

Catalog No.		Output Ratings					Input Ratings		Frame Size	Contactor Catalog No.	IEC Applications (Non-UL)				UL Applications			
PF 523	PF 525	ND		HD		Amps	kVA	Max Amps(1)			Fuses (Rating)		Circuit Breakers		Fuses (Max. Rating)	Circuit Breakers		Min. Enclosure Vol. (in.3)
		HP	kW	HP	kW						Min.	Max.	140U/140G	140M	Class / Catalog No.	140U/140G	140M(2)(3)(4)	
25A-V1P6N104	–	0.25	0.2	0.25	0.2	1.6	0.8	6.4	A	100-C09	10	16	140U-D6D2-B80	140M-C2E-B63	CLASS RK5, CC, J, or T / DLS-R-15	140U-D6D2-B80	140M-C2E-B63	–
25A-V2P5N104	25B-V2P5N104	0.5	0.4	0.5	0.4	2.5	1.3	9.6	A	100-C12	16	20	140U-D6D2-C12	140M-C2E-C10	CLASS RK5, CC, J, or T / DLS-R-20	140U-D6C2-C12	140M-C2E-C10	–
25A-V4P8N104	25B-V4P8N104	1.0	0.75	1.0	0.75	4.8	2.5	19.2	B	100-C23	25	40	140U-D6D2-C25	140M-D8E-C20	CLASS RK5, CC, J, or T / DLS-R-40	140U-D6D2-C25	140M-D8E-C20	–
25A-V6P0N104	25B-V6P0N104	1.5	1.1	1.5	1.1	6.0	3.2	24.0	B	100-C23	32	50	140U-D6D2-C30	140M-F8E-C25	CLASS RK5, CC, J, or T / DLS-R-50	140U-D6D2-C30	140M-F8E-C25	–

200...240V 1-Phase Input Protection Devices – Frames A...B

Catalog No.		Output Ratings					Input Ratings		Frame Size	Contactor Catalog No.	IEC Applications (Non-UL)				UL Applications			
PF 523	PF 525	ND		HD		Amps	kVA	Max Amps(1)			Fuses (Rating)		Circuit Breakers		Fuses (Max. Rating)	Circuit Breakers		Min. Enclosure Vol. (in.3)
		HP	kW	HP	kW						Min.	Max.	140U/140G	140M	Class / Catalog No.	140U/140G	140M(2)(3)(4)	
25A-A1P6N104	–	0.25	0.2	0.25	0.2	1.6	1.4	5.3	A	100-C09	6	10	140U-D6D2-C10	140M-C2E-B63	CLASS RK5, CC, J, or T / DLS-R-15	140U-D6D2-C10	140M-C2E-B63	–
25A-A1P6N114	–	0.25	0.2	0.25	0.2	1.6	1.4	5.3	A	100-C09	6	10	140U-D6D2-C10	140M-C2E-B63	CLASS RK5, CC, J, or T / DLS-R-15	140U-D6D2-C10	140M-C2E-B63	–
25A-A2P5N104	25B-A2P5N104	0.5	0.4	0.5	0.4	2.5	1.7	6.5	A	100-C09	10	16	140U-D6D2-C10	140M-C2E-C10	CLASS RK5, CC, J, or T / DLS-R-15	140U-D6D2-C10	140M-C2E-C10	–
25A-A2P5N114	25B-A2P5N114	0.5	0.4	0.5	0.4	2.5	1.7	6.5	A	100-C09	10	16	140U-D6D2-C10	140M-C2E-C10	CLASS RK5, CC, J, or T / DLS-R-15	140U-D6D2-C10	140M-C2E-C10	–
25A-A4P8N104	25B-A4P8N104	1.0	0.75	1.0	0.75	4.8	2.8	10.7	A	100-C12	16	25	140U-D6D2-C15	140M-C2E-C16	CLASS RK5, CC, J, or T / DLS-R-25	140U-D6D2-C15	140M-C2E-C16	–
25A-A4P8N114	25B-A4P8N114	1.0	0.75	1.0	0.75	4.8	2.8	10.7	A	100-C12	16	25	140U-D6D2-C15	140M-C2E-C16	CLASS RK5, CC, J, or T / DLS-R-25	140U-D6D2-C15	140M-C2E-C16	–
25A-A8P0N104	25B-A8P0N104	2.0	1.5	2.0	1.5	8.0	4.8	18.0	B	100-C23	25	40	140U-D6D2-C25	140M-F8E-C25	CLASS CC, J, or T / 40	140U-D6D2-C25	140M-F8E-C25	–
25A-A8P0N114	25B-A8P0N114	2.0	1.5	2.0	1.5	8.0	4.8	18.0	B	100-C23	25	40	140U-D6D2-C25	140M-F8E-C25	CLASS CC, J, or T / 40	140U-D6D2-C25	140M-F8E-C25	–
25A-A011N104	25B-A011N104	3.0	2.2	3.0	2.2	11.0	6.0	22.9	B	100-C37	32	50	140G-G6C3-C35	140M-F8E-C25	CLASS CC, J, or T / 50	–(5)	140M-F8E-C25	–
25A-A011N114	25B-A011N114	3.0	2.2	3.0	2.2	11.0	6.0	22.9	B	100-C37	32	50	140G-G6C3-C35	140M-F8E-C25	CLASS CC, J, or T / 50	–(5)	140M-F8E-C25	–

(1) When the drive is controlling motors with lower amp ratings, refer to the drive nameplate for drive input current rating.

(2) The AIC ratings of the Bulletin 140M Motor Protector Circuit Breakers may vary. See Bulletin 140M Motor Protection Circuit Breakers Application Ratings.

(3) Bulletin 140M with adjustable current range should have the current trip set to the minimum range that the device will not trip.

(4) Manual Self-Protected (Type E) Combination Motor Controller, UL listed for 480Y/277 and 600Y/347 AC input. Not UL listed for use on 480V or 600V Delta/Delta, corner ground, or high-resistance ground systems.

(5) Circuit breaker selection is not available for this drive rating.

Fuses and Circuit Breakers for PowerFlex 520-Series Drives *(continued)*

200...240V 3-Phase Input Protection Devices – Frames A...E

Catalog No.[1]		Output Ratings					Input Ratings		Frame Size	Contactor Catalog No.	IEC Applications (Non-UL)				UL Applications			
PF 523	PF 525	ND		HD		Amps	kVA	Max Amps[2]			Fuses (Rating)		Circuit Breakers		Fuses (Max. Rating)	Circuit Breakers		Min. Enclosure Vol. (in.^{3})
		HP	kW	HP	kW						Min.	Max.	140U/140G	140M	Class / Catalog No.	140U/140G	140M[3][4][5]	
25A-B1P6N104	–	0.25	0.2	0.25	0.2	1.6	0.9	1.9	A	100-C09	3	6	140U-D6D3-B30	140M-C2E-B25	CLASS RK5, CC, J, or T / DLS-R-15	140U-D6D3-B30	140M-C2E-B25	–
25A-B2P5N104	25B-B2P5N104	0.5	0.4	0.5	0.4	2.5	1.2	2.7	A	100-C09	6	6	140U-D6D3-B40	140M-C2E-B40	CLASS RK5, CC, J, or T / DLS-R-6	140U-D6D3-B40	140M-C2E-B40	–
25A-B5P0N104	25B-B5P0N104	1.0	0.75	1.0	0.75	5.0	2.7	5.8	A	100-C09	10	16	140U-D6D3-B80	140M-C2E-B63	CLASS RK5, CC, J, or T / DLS-R-15	140U-D6D3-B80	140M-C2E-B63	–
25A-B8P0N104	25B-B8P0N104	2.0	1.5	2.0	1.5	8.0	4.3	9.5	A	100-C12	16	20	140U-D6D3-C10	140M-C2E-C10	CLASS RK5, CC, J, or T / DLS-R-20	140U-D6D3-C10	140M-C2E-C10	–
25A-B011N104	25B-B011N104	3.0	2.2	3.0	2.2	11.0	6.3	13.8	A	100-C23	20	32	140U-D6D3-C15	140M-C2E-C16	CLASS RK5, CC, J, or T / DLS-R-30	140U-D6D3-C15	140M-C2E-C16	–
25A-B017N104	25B-B017N104	5.0	4.0	5.0	4.0	17.5	9.6	21.1	B	100-C23	32	45	140U-D6D3-C25	140M-F8E-C25	CLASS CC, J, or T / 45	140U-D6D3-C25	140M-F8E-C25	–
25A-B024N104	25B-B024N104	7.5	5.5	7.5	5.5	24.0	12.2	26.6	C	100-C37	35	63	140G-G6C3-C35	140M-F8E-C32	CLASS CC, J, or T / 60	–[7]	140M-F8E-C32	–
25A-B032N104	25B-B032N104	10.0	7.5	10.0	7.5	32.2	15.9	34.8	D	100-C43	45	70	140G-G6C3-C60	140M-F8E-C45	CLASS RK5, CC, J, or T / DLS-R-70	–[7]	140M-F8E-C45	–
25A-B048N104	25B-B048N104	15.0	11.0	10.0	7.5	48.3	20.1	44.0	E	100-C60	63	90	140G-G6C3-C70	140M-F8E-C45	CLASS CC, J, or T / 90	–[7]	140M-F8E-C45	1416.0[6]
25A-B062N104	25B-B062N104	20.0	15.0	15.0	11.0	62.1	25.6	56.0	E	100-C72	70	125	140G-G6C3-C90	–[7]	CLASS CC, J, or T / 125	–[7]	–[7]	–

(1) Normal Duty (ND) and Heavy Duty (HD) ratings are available for this drive.

(2) When the drive is controlling motors with lower amp ratings, refer to the drive nameplate for drive input current rating.

(3) The AIC ratings of the Bulletin 140M Motor Protector Circuit Breakers may vary. See Bulletin 140M Motor Protection Circuit Breakers Application Ratings.

(4) Bulletin 140M with adjustable current range should have the current trip set to the minimum range that the device will not trip.

(5) Manual Self-Protected (Type E) Combination Motor Controller, UL listed for 480Y/277 and 600Y/347 AC input. Not UL listed for use on 480V or 600V Delta/Delta, corner ground, or high-resistance ground systems.

(6) When using a Manual Self-Protected (Type E) Combination Motor Controller with this drive power rating, the drive must be installed in a ventilated or non-ventilated enclosure with the minimum volume specified in this column. Application specific thermal considerations may require a larger enclosure.

(7) Circuit breaker selection is not available for this drive rating.

Fuses and Circuit Breakers for PowerFlex 520-Series Drives *(continued)*

380...480V 3-Phase Input Protection Devices – Frames A...E

Catalog No.[1]		Output Ratings					Input Ratings		Frame Size	Contactor Catalog No.	IEC Applications (Non-UL)				UL Applications			
PF 523	PF 525	ND		HD		Amps	kVA	Max Amps[2]			Fuses (Rating)		Circuit Breakers		Fuses (Max. Rating)	Circuit Breakers		Min. Enclosure Vol. (in.^{3})
		HP	kW	HP	kW						Min.	Max.	140U/140G	140M	Class / Catalog No.	140U/140G	140M[3][4][5]	
25A-D1P4N104	25B-D1P4N104	0.5	0.4	0.5	0.4	1.4	1.7	1.9	A	100-C09	3	6	140U-D6D3-B30	140M-C2E-B25	CLASS RK5, CC, J, or T / DLS-R-6	–[7]	140M-C2E-B25	–
25A-D1P4N114	25B-D1P4N114	0.5	0.4	0.5	0.4	1.4	1.7	1.9	A	100-C09	3	6	140U-D6D3-B30	140M-C2E-B25	CLASS RK5, CC, J, or T / DLS-R-6	–[7]	140M-C2E-B25	–
25A-D2P3N104	25B-D2P3N104	1.0	0.75	1.0	0.75	2.3	2.9	3.2	A	100-C09	6	10	140U-D6D3-B60	140M-C2E-B40	CLASS RK5, CC, J, or T / DLS-R-10	–[7]	140M-C2E-B40	–
25A-D2P3N114	25B-D2P3N114	1.0	0.75	1.0	0.75	2.3	2.9	3.2	A	100-C09	6	10	140U-D6D3-B60	140M-C2E-B40	CLASS RK5, CC, J, or T / DLS-R-10	–[7]	140M-C2E-B40	–
25A-D4P0N104	25B-D4P0N104	2.0	1.5	2.0	1.5	4.0	5.2	5.7	A	100-C09	10	16	140U-D6D3-B60	140M-C2E-B63	CLASS RK5, CC, J, or T / DLS-R-15	–[7]	140M-C2E-B63	–
25A-D4P0N114	25B-D4P0N114	2.0	1.5	2.0	1.5	4.0	5.2	5.7	A	100-C09	10	16	140U-D6D3-B60	140M-C2E-B63	CLASS RK5, CC, J, or T / DLS-R-15	–[7]	140M-C2E-B63	–
25A-D6P0N104	25B-D6P0N104	3.0	2.2	3.0	2.2	6.0	6.9	7.5	A	100-C09	10	16	140U-D6D3-C10	140M-C2E-C10	CLASS RK5, CC, J, or T / DLS-R-15	–[7]	140M-C2E-C10	–
25A-D6P0N114	25B-D6P0N114	3.0	2.2	3.0	2.2	6.0	6.9	7.5	A	100-C09	10	16	140U-D6D3-C10	140M-C2E-C10	CLASS RK5, CC, J, or T / DLS-R-15	–[7]	140M-C2E-C10	–
25A-D010N104	25B-D010N104	5.0	4.0	5.0	4.0	10.5	12.6	13.8	B	100-C23	20	32	140U-D6D3-C15	140M-C2E-C16	CLASS RK5, CC, J, or T / DLS-R-30	–[7]	140M-C2E-C16	–
25A-D010N114	25B-D010N114	5.0	4.0	5.0	4.0	10.5	12.6	13.8	B	100-C23	20	32	140U-D6D3-C15	140M-C2E-C16	CLASS RK5, CC, J, or T / DLS-R-30	–[7]	140M-C2E-C16	–
25A-D013N104	25B-D013N104	7.5	5.5	7.5	5.5	13.0	14.1	15.4	C	100-C23	20	35	140U-D6D3-C25	140M-D8E-C20	CLASS CC, J, or T / 35	–[7]	140M-D8E-C20	–
25A-D013N114	25B-D013N114	7.5	5.5	7.5	5.5	13.0	14.1	15.4	C	100-C23	20	35	140U-D6D3-C25	140M-D8E-C20	CLASS CC, J, or T / 35	–[7]	140M-D8E-C20	–
25A-D017N104	25B-D017N104	10.0	7.5	10.0	7.5	17.0	16.8	18.4	C	100-C23	25	40	140U-D6D3-C25	140M-D8E-C20	CLASS CC, J, or T / 40	–[7]	140M-D8E-C20	–
25A-D017N114	25B-D017N114	10.0	7.5	10.0	7.5	17.0	16.8	18.4	C	100-C23	25	40	140U-D6D3-C25	140M-D8E-C20	CLASS CC, J, or T / 40	–[7]	140M-D8E-C20	–
25A-D024N104	25B-D024N104	15.0	11.0	15.0	11.0	24.0	24.1	26.4	D	100-C37	35	63	140G-G6C3-C40	140M-F8E-C32	CLASS CC, J, or T / 60	–[7]	140M-F8E-C32	656.7[6]
25A-D024N114	25B-D024N114	15.0	11.0	15.0	11.0	24.0	24.1	26.4	D	100-C37	35	63	140G-G6C3-C40	140M-F8E-C32	CLASS CC, J, or T / 60	–[7]	140M-F8E-C32	656.7[6]
25A-D030N104	25B-D030N104	20.0	15.0	15.0	11.0	30.0	30.2	33.0	D	100-C43	45	70	140G-G6C3-C50	140M-F8E-C45	CLASS CC, J, or T / 70	–[7]	140M-F8E-C45	656.7[6]
25A-D030N114	25B-D030N114	20.0	15.0	15.0	11.0	30.0	30.2	33.0	D	100-C43	45	70	140G-G6C3-C50	140M-F8E-C45	CLASS CC, J, or T / 70	–[7]	140M-F8E-C45	656.7[6]
25A-D037N114	25B-D037N114	25.0	18.5	20.0	15.0	37.0	30.8	33.7	E	100-C43	45	70	140G-G6C3-C50	140M-F8E-C45	CLASS CC, J, or T / 70	–[7]	140M-F8E-C45	–
25A-D043N114	25B-D043N114	30.0	22.0	25.0	18.5	43.0	35.6	38.9	E	100-C60	50	80	140G-G6C3-C60	140M-F8E-C45	CLASS CC, J, or T / 80	–[7]	140M-F8E-C45	–

(1) Normal Duty (ND) and Heavy Duty (HD) ratings are available for this drive.

(2) When the drive is controlling motors with lower amp ratings, refer to the drive nameplate for drive input current rating.

(3) The AIC ratings of the Bulletin 140M Motor Protector Circuit Breakers may vary. See Bulletin 140M Motor Protection Circuit Breakers Application Ratings.

(4) Bulletin 140M with adjustable current range should have the current trip set to the minimum range that the device will not trip.

(5) Manual Self-Protected (Type E) Combination Motor Controller, UL listed for 480Y/277 and 600Y/347 AC input. Not UL listed for use on 480V or 600V Delta/Delta, corner ground, or high-resistance ground systems.

(6) When using a Manual Self-Protected (Type E) Combination Motor Controller with this drive power rating, the drive must be installed in a ventilated or non-ventilated enclosure with the minimum volume specified in this column. Application specific thermal considerations may require a larger enclosure.

(7) Circuit breaker selection is not available for this drive rating.

Fuses and Circuit Breakers for PowerFlex 520-Series Drives *(continued)*

525...600V 3-Phase Input Protection Devices – Frames A...E

Catalog No.[1]		Output Ratings					Input Ratings		Frame Size	Contactor Catalog No.	IEC Applications (Non-UL)				UL Applications			
PF 523	PF 525	ND		HD		Amps	kVA	Max Amps[2]			Fuses (Rating)		Circuit Breakers		Fuses (Max. Rating)	Circuit Breakers		Min. Enclosure Vol. (in.^{3})
		HP	kW	HP	kW						Min.	Max.	140U/140G	140M	Class / Catalog No.	140U/140G	140M[3][4][5]	
25A-E0P9N104	25B-E0P9N104	0.5	0.4	0.5	0.4	0.9	1.4	1.2	A	100-C09	3	6	140U-D6D3-B20	140M-C2E-B25	CLASS RK5, CC, J, or T / DLS-R-6	–[8]	140M-C2E-B25	–
25A-E1P7N104	25B-E1P7N104	1.0	0.75	1.0	0.75	1.7	2.6	2.3	A	100-C09	3	6	140U-D6D3-B30	140M-C2E-B25	CLASS RK5, CC, J, or T / DLS-R-6	–[8]	140M-C2E-B25	–
25A-E3P0N104	25B-E3P0N104	2.0	1.5	2.0	1.5	3.0	4.3	3.8	A	100-C09	6	10	140U-D6D3-B50	140M-C2E-B40	CLASS RK5, CC, J, or T / DLS-R-10	–[8]	140M-C2E-B40	–
25A-E4P2N104	25B-E4P2N104	3.0	2.2	3.0	2.2	4.2	6.1	5.3	A	100-C09	10	16	140U-D6D3-B80	140M-C2E-B63	CLASS RK5, CC, J, or T / DLS-R-15	–[8]	140M-D8E-B63	–
25A-E6P6N104	25B-E6P6N104	5.0	4.0	5.0	4.0	6.6	9.1	8.0	B	100-C09	10	20	140U-D6D3-C10	140M-C2E-C10	CLASS RK5, CC, J, or T / DLS-R-20	–[8]	140M-D8E-C10	–
25A-E9P9N104	25B-E9P9N104	7.5	5.5	7.5	5.5	9.9	12.8	11.2	C	100-C16	16	25	140U-D6D3-C15	140M-C2E-C16	CLASS RK5, CC, J, or T / DLS-R-25	–[8]	140M-D8E-C16[6]	–
25A-E012N104	25B-E012N104	10.0	7.5	10.0	7.5	12.0	15.4	13.5	C	100-C23	20	32	140U-D6D3-C20	140M-C2E-C16	CLASS RK5, CC, J, or T / DLS-R-30	–[8]	140M-D8E-C16	–
25A-E019N104	25B-E019N104	15.0	11.0	15.0	11.0	19.0	27.4	24.0	D	100-C30	32	50	140G-G6C3-C30	140M-F8E-C25	CLASS CC, J, or T / 50	–[8]	140M-F8E-C25	656.7[7]
25A-E022N104	25B-E022N104	20.0	15.0	15.0	11.0	22.0	31.2	27.3	D	100-C30	35	63	140G-G6C3-C35	140M-F8E-C32	CLASS CC, J, or T / 60	–[8]	140M-F8E-C32	656.7[7]
25A-E027N104	25B-E027N104	25.0	18.5	20.0	15.0	27.0	28.2	24.7	E	100-C30	35	50	140G-G6C3-C35	140M-F8E-C32	CLASS CC, J, or T / 50	–[8]	140M-F8E-C32	1416.0[7]
25A-E032N104	25B-E032N104	30.0	22.0	25.0	18.5	32.0	33.4	29.2	E	100-C37	40	63	140G-G6C3-C50	140M-F8E-C32	CLASS CC, J, or T / 60	–[8]	140M-F8E-C32	1416.0[7]

(1) Normal Duty (ND) and Heavy Duty (HD) ratings are available for this drive.
(2) When the drive is controlling motors with lower amp ratings, refer to the drive nameplate for drive input current rating.
(3) The AIC ratings of the Bulletin 140M Motor Protector Circuit Breakers may vary. See Bulletin 140M Motor Protection Circuit Breakers Application Ratings.
(4) Bulletin 140M with adjustable current range should have the current trip set to the minimum range that the device will not trip.
(5) Manual Self-Protected (Type E) Combination Motor Controller, UL listed for 480Y/277 and 600Y/347 AC input. Not UL listed for use on 480V or 600V Delta/Delta, corner ground, or high-resistance ground systems.
(6) When used with the 140M circuit breaker, the 25A-E9P9104 must be installed in a ventilated or non-ventilated enclosure with the minimum size of 457.2 x 457.2 x 269.8 mm (18 x 18 x 10.62 in.).
(7) When using a Manual Self-Protected (Type E) Combination Motor Controller with this drive power rating, the drive must be installed in a ventilated or non-ventilated enclosure with the minimum volume specified in this column. Application specific thermal considerations may require a larger enclosure.
(8) Circuit breaker selection is not available for this drive rating.

Power and Control Module

PowerFlex 520-series drives consist of a Power Module and Control Module.

Separating the Power and Control Module

ATTENTION: Perform this action only when drive is NOT powered.

1. Press and hold down the catch on both sides of the frame cover, then pull out and swing upwards to remove (Frames B...E only).

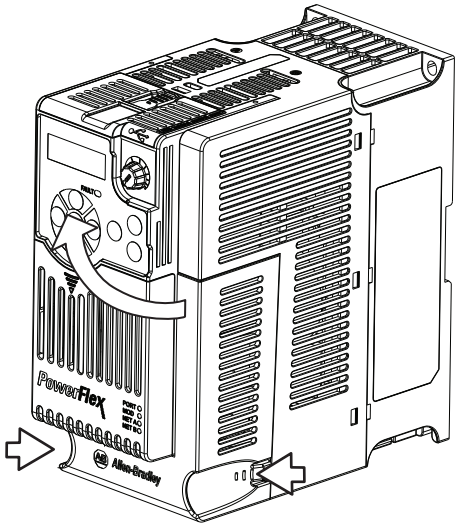

2. Press down and slide out the top cover of the Control Module to unlock it from the Power Module.

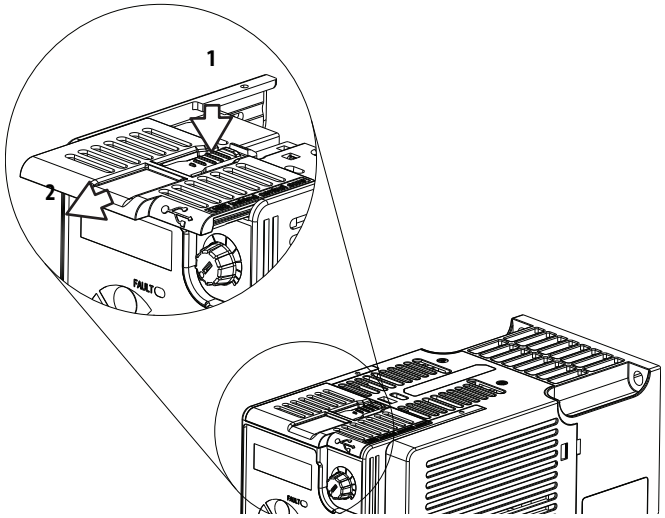

3. Hold the sides and top of the Control Module firmly, then pull out to separate it from the Power Module.

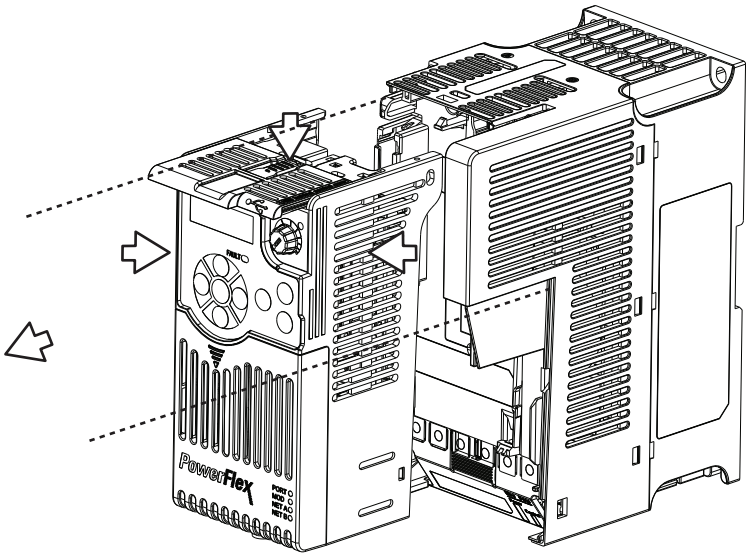

Connecting the Power and Control Module

1. Align the connectors on the Power Module and Control Module, then push the Control Module firmly onto the Power Module.

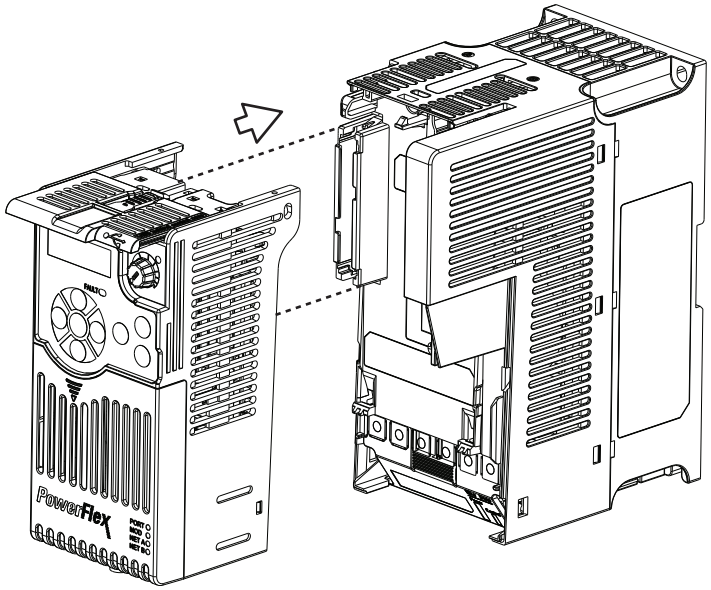

2. Push the top cover of the Control Module towards the Power Module to lock it.

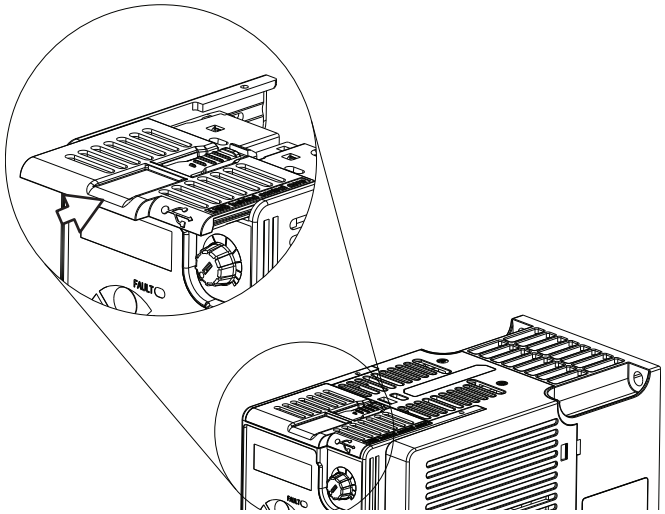

3. Insert the catch at the top of the frame cover into the Power Module, then swing the frame cover to snap the side catches onto the Power Module (Frames B...E only).

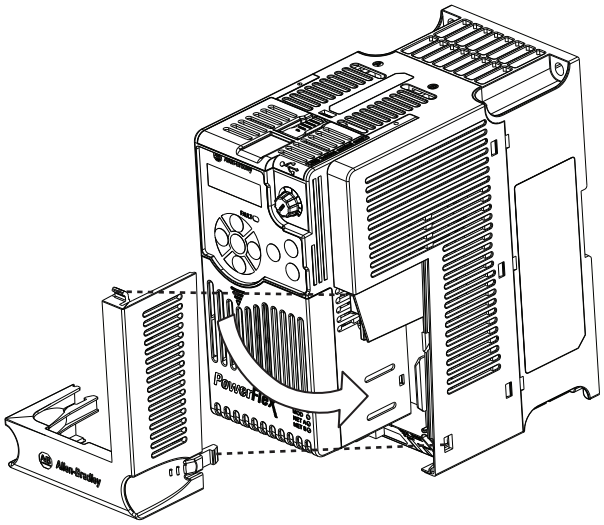

Control Module Cover

To access the control terminals, DSI port, and Ethernet port, the front cover must be removed. To remove:

1. Press and hold down the arrow on the front of the cover.
2. Slide the front cover down to remove from the Control Module.

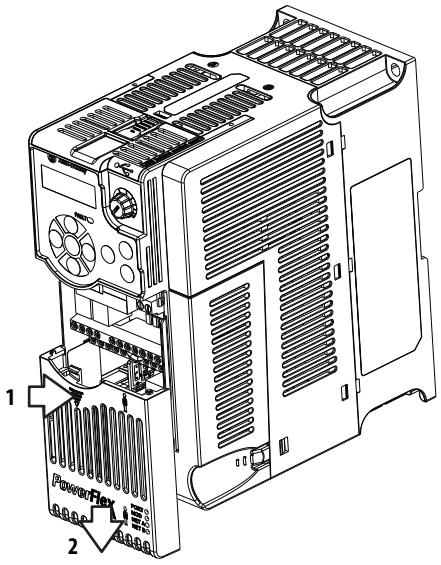

Re-attach the front cover when wiring is complete.

Power Module Terminal Guard

To access the power terminals, the terminal guard must be removed. To remove:

1. Press and hold down the catch on both sides of the frame cover, then pull out and swing upwards to remove (Frames B...E only).

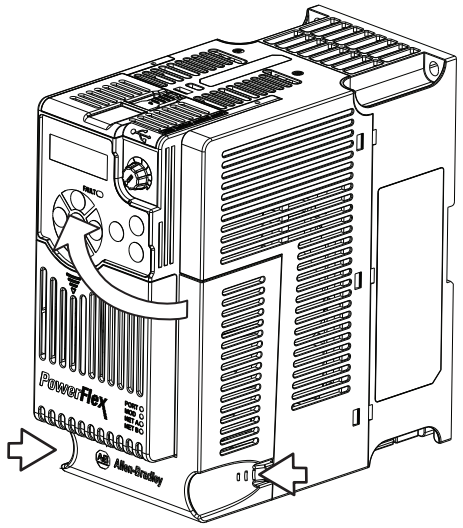

2. Press and hold down the locking tab on the terminal guard.
3. Slide the terminal guard down to remove from the Power Module.

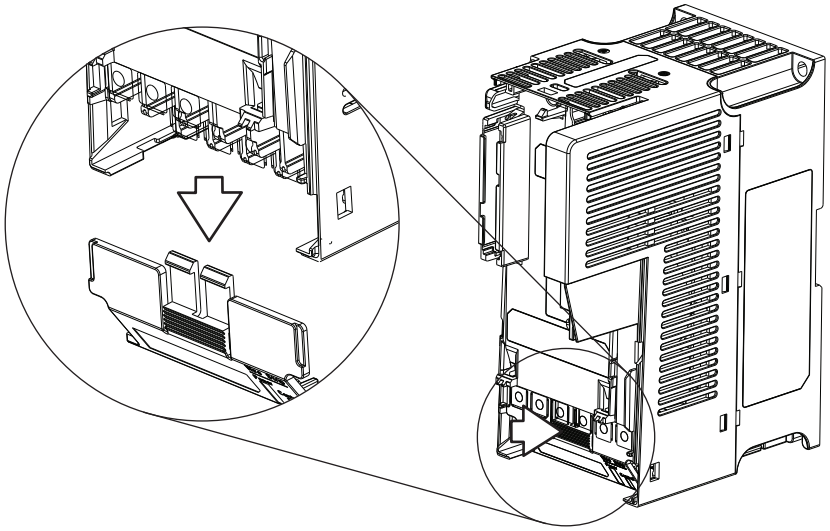

Re-attach the terminal guard when wiring is complete.

To access the power terminals for Frame A, you need to separate the Power and Control Modules. See Separating the Power and Control Module on page 28 for instructions.

Power Wiring

ATTENTION: National Codes and standards (NEC, VDE, BSI, etc.) and local codes outline provisions for safely installing electrical equipment. Installation must comply with specifications regarding wire types, conductor sizes, branch circuit protection and disconnect devices. Failure to do so may result in personal injury and/or equipment damage.

ATTENTION: To avoid a possible shock hazard caused by induced voltages, unused wires in the conduit must be grounded at both ends. For the same reason, if a drive sharing a conduit is being serviced or installed, all drives using this conduit should be disabled. This will help minimize the possible shock hazard from "cross coupled" power leads.

Motor Cable Types Acceptable for 100...600 Volt Installations

A variety of cable types are acceptable for drive installations. For many installations, unshielded cable is adequate, provided it can be separated from sensitive circuits. As an approximate guide, allow a spacing of 0.3 m (1 ft) for every 10 m (32.8 ft) of length. In all cases, long parallel runs must be avoided. Do not use cable with an insulation thickness less than 15 mils (0.4 mm/0.015 in.). Do not route more than three sets of motor leads in a single conduit to minimize "cross talk". If more than three drive/motor connections per conduit are required, shielded cable must be used.

UL installations above 50 °C ambient must use 600V, 90 °C wire.
UL installations in 50 °C ambient must use 600V, 75 °C or 90 °C wire.
UL installations in 40 °C ambient should use 600V, 75 °C or 90 °C wire.
Use copper wire only. Wire gauge requirements and recommendations are based on 75 °C. Do not reduce wire gauge when using higher temperature wire.

WARNING: The distance between the drive and motor must not exceed the maximum cable length stated in the Motor Cable Length Restrictions Tables in "Wiring and Grounding Guide, (PWM) AC Drives," publication DRIVES-IN001.

Unshielded

THHN, THWN or similar wire is acceptable for drive installation in dry environments provided adequate free air space and/or conduit fill rates limits are provided. Any wire chosen must have a minimum insulation thickness of 15 mils and should not have large variations in insulation concentricity.

ATTENTION: Do not use THHN or similarly coated wire in wet areas.

Shielded/Armored Cable

Shielded cable contains all of the general benefits of multi-conductor cable with the added benefit of a copper braided shield that can contain much of the noise generated by a typical AC Drive. Strong consideration for shielded cable should be given in installations with sensitive equipment such as weigh scales, capacitive proximity switches and other devices that may be affected by electrical noise in the distribution system. Applications with large numbers of drives in a similar location, imposed EMC regulations or a high degree of communications / networking are also good candidates for shielded cable.

Shielded cable may also help reduce shaft voltage and induced bearing currents for some applications. In addition, the increased impedance of shielded cable may help extend the distance that the motor can be located from the drive without the addition of motor protective devices such as terminator networks. Refer to Reflected Wave in "Wiring and Grounding Guide, (PWM) AC Drives," publication DRIVES-IN001.

Consideration should be given to all of the general specifications dictated by the environment of the installation, including temperature, flexibility, moisture characteristics and chemical resistance. In addition, a braided shield should be included and be specified by the cable manufacturer as having coverage of at least 75%. An additional foil shield can greatly improve noise containment.

A good example of recommended cable is Belden® 295xx (xx determines gauge). This cable has four (4) XLPE insulated conductors with a 100% coverage foil and an 85% coverage copper braided shield (with drain wire) surrounded by a PVC jacket.

Other types of shielded cable are available, but the selection of these types may limit the allowable cable length. Particularly, some of the newer cables twist 4 conductors of THHN wire and wrap them tightly with a foil shield. This construction can greatly increase the cable charging current required and reduce the overall drive performance. Unless specified in the individual distance tables as tested with the drive, these cables are not recommended and their performance against the lead length limits supplied is not known.

Recommended Shielded Wire

Location	Rating/Type	Description
Standard (Option 1)	600V, 90 °C (194 °F) XHHW2/RHW-2 Anixter B209500-B209507, Belden 29501-29507, or equivalent	• Four tinned copper conductors with XLPE insulation. • Copper braid/aluminum foil combination shield and tinned copper drain wire. • PVC jacket.
Standard (Option 2)	Tray rated 600V, 90 °C (194 °F) RHH/RHW-2 Anixter OLF-7xxxxx or equivalent	• Three tinned copper conductors with XLPE insulation. • 5 mil single helical copper tape (25% overlap min.) with three bare copper grounds in contact with shield. • PVC jacket.
Class I & II; Division I & II	Tray rated 600V, 90 °C (194 °F) RHH/RHW-2 Anixter 7V-7xxxx-3G or equivalent	• Three bare copper conductors with XLPE insulation and impervious corrugated continuously welded aluminum armor. • Black sunlight resistant PVC jacket overall. • Three copper grounds on #10 AWG and smaller.

Reflected Wave Protection

The drive should be installed as close to the motor as possible. Installations with long motor cables may require the addition of external devices to limit voltage reflections at the motor (reflected wave phenomena). Refer to Reflected Wave in "Wiring and Grounding Guide, (PWM) AC Drives," publication DRIVES-IN001.

The reflected wave data applies to all carrier frequencies 2...16 kHz.

For 240V ratings and lower, reflected wave effects do not need to be considered.

Output Disconnect

The drive is intended to be commanded by control input signals that will start and stop the motor. A device that routinely disconnects then reapplies output power to the motor for the purpose of starting and stopping the motor should not be used. If it is necessary to disconnect power to the motor with the drive outputting power, an auxiliary contact should be used to simultaneously disable drive (Aux Fault or Coast to Stop).

Power Terminal Block

Power Terminal Block

Frame A, B, C & D

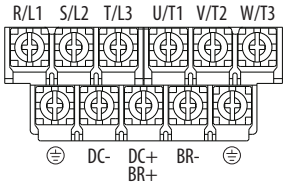

Frame E

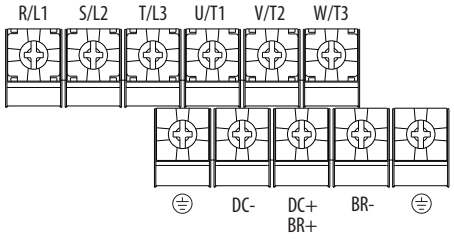

Terminal	Description
R/L1, S/L2	1-Phase Input Line Voltage Connection
R/L1, S/L2, T/L3	3-Phase Input Line Voltage Connection
U/T1, V/T2, W/T3	Motor Phase Connection = 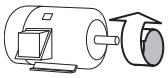 Switch any two motor leads to change forward direction.
DC+, DC-	DC Bus Connection (except for 110V 1-Phase)
BR+, BR-	Dynamic Brake Resistor Connection
⏚	Safety Ground - PE

IMPORTANT Terminal screws may become loose during shipment. Ensure that all terminal screws are tightened to the recommended torque before applying power to the drive.

Power Terminal Block Wire Specifications

Frame	Maximum Wire Size(1)	Minimum Wire Size(1)	Torque
A	5.3 mm^2 (10 AWG)	0.8 mm^2 (18 AWG)	1.76...2.16 Nm (15.6...19.1 lb-in.)
B	8.4 mm^2 (8 AWG)	2.1 mm^2 (14 AWG)	1.76...2.16 Nm (15.6...19.1 lb-in.)
C	8.4 mm^2 (8 AWG)	2.1 mm^2 (14 AWG)	1.76...2.16 Nm (15.6...19.1 lb-in.)
D	13.3 mm^2 (6 AWG)	5.3 mm^2 (10 AWG)	1.76...2.16 Nm (15.6...19.1 lb-in.)
E	26.7 mm^2 (3 AWG)	8.4 mm^2 (8 AWG)	3.09...3.77 Nm (27.3...33.4 lb-in.)

(1) Maximum/minimum sizes that the terminal block will accept – these are not recommendations.

Common Bus/Precharge Notes

If drives are used with a disconnect switch to the common DC bus, then an auxiliary contact on the disconnect must be connected to a digital input of the drive. The corresponding input (parameter t062, t063, t065...t068 [DigIn TermBlk xx]) must be set to 30, "Precharge En" This provides the proper precharge interlock, guarding against possible damage to the drive when connected to a common DC bus. For more information, see Drives in Common Bus Configurations, publication DRIVES-AT002.

I/O Wiring

Motor Start/Stop Precautions

ATTENTION: A contactor or other device that routinely disconnects and reapplies the AC line to the drive to start and stop the motor can cause drive hardware damage. The drive is designed to use control input signals that will start and stop the motor. If used, the input device must not exceed one operation per minute or drive damage can occur.

ATTENTION: The drive start/stop control circuitry includes solid-state components. If hazards due to accidental contact with moving machinery or unintentional flow of liquid, gas or solids exist, an additional hardwired stop circuit may be required to remove the AC line to the drive. When the AC line is removed, there will be a loss of any inherent regenerative braking effect that might be present - the motor will coast to a stop. An auxiliary braking method may be required. Alternatively, use the drive's safety input function.

Important points to remember about I/O wiring:

- Always use copper wire.
- Wire with an insulation rating of 600V or greater is recommended.
- Control and signal wires should be separated from power wires by at least 0.3 m (1 ft).

IMPORTANT I/O terminals labeled "Common" are not referenced to the safety ground (PE) terminal and are designed to greatly reduce common mode interference.

ATTENTION: Driving the 4-20 mA analog input from a voltage source could cause component damage. Verify proper configuration prior to applying input signals.

Signal and Control Wire Types

Recommendations are for 50 °C ambient temperature.
75 °C wire must be used for 60 °C ambient temperature.
90 °C wire must be used for 70 °C ambient temperature.

Recommended Signal Wire

Signal Type/ Where Used	Belden Wire Type(s)[1] *(or equivalent)*	Description	Min. Insulation Rating
Analog I/O & PTC	8760/9460	0.750 mm^2 (18 AWG), twisted pair, 100% shield with drain[2]	300V, 60 °C (140 °F)
Remote Pot	8770	0.750 mm^2 (18 AWG), 3 conductor, shielded	
Encoder/Pulse I/O	9728/9730	0.196 mm^2 (24 AWG), individually shielded pairs	

(1) Stranded or solid wire.

(2) If the wires are short and contained within a cabinet which has no sensitive circuits, the use of shielded wire may not be necessary, but is always recommended.

Recommended Control Wire for Digital I/O

Type	Wire Type(s)	Description	Min. Insulation Rating
Unshielded	Per US NEC or applicable national or local code	–	300V, 60 °C (140 °F)
Shielded	Multi-conductor shielded cable such as Belden 8770 (or equivalent)	0.750 mm^2 (18 AWG), 3 conductor, shielded.	

Maximum Control Wire Recommendations

Do not exceed control wiring length of 30 m (100 ft). Control signal cable length is highly dependent on electrical environment and installation practices. To improve noise immunity, the I/O terminal block Common may be connected to ground terminal/protective earth.

Control I/O Terminal Block

Control I/O Terminal Block Wire Specifications

Frame	Maximum Wire Size[1]	Minimum Wire Size[1]	Torque
A...E	1.3 mm^2 (16 AWG)	0.13 mm^2 (26 AWG)	0.71...0.86 Nm (6.2...7.6 lb-in.)

(1) Maximum/minimum sizes that the terminal block will accept – these are not recommendations.

PowerFlex 523 Control I/O Terminal Block

PowerFlex 523 Control I/O Wiring Block Diagram

Series A

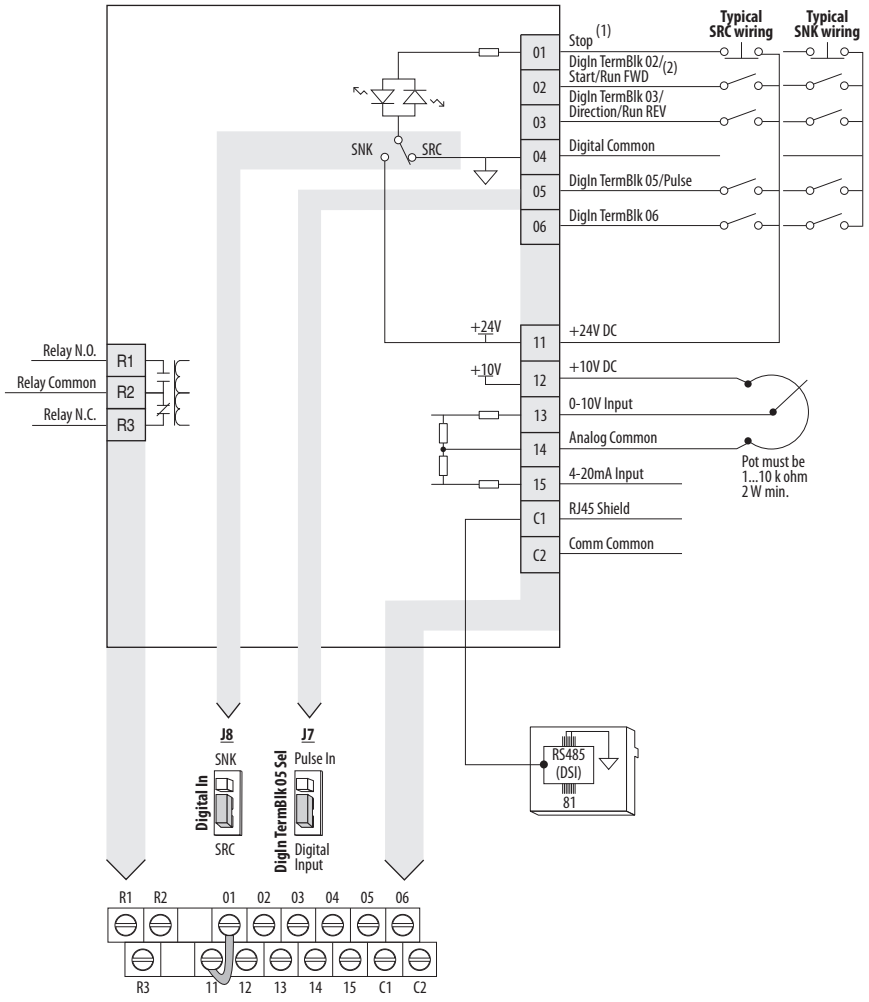

Series B

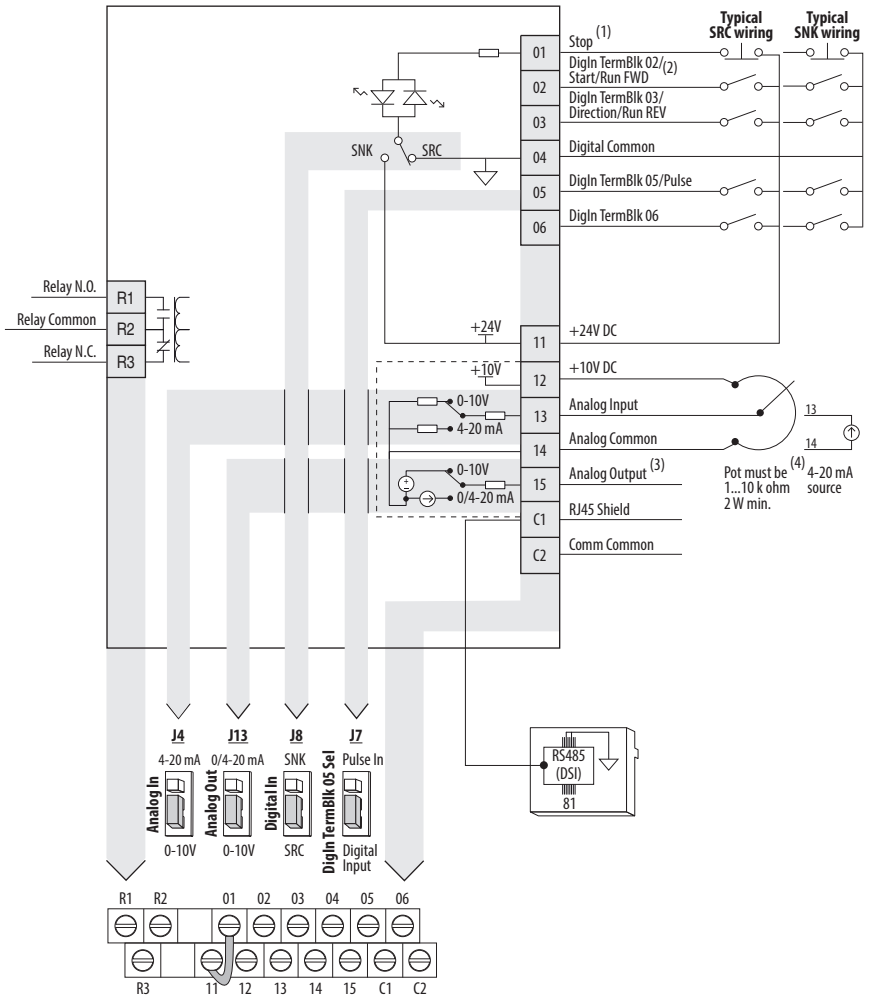

Control I/O Wiring Block Diagram Notes

(1) See Digital Input Selection for Start Source on page 50 for more information on configuring the digital inputs.

IMPORTANT I/O Terminal 01 is always a stop input. The stopping mode is determined by the drive setting. See the tables below for more information.

Start Method	Stop Method	
P046, P048, P050 [Start Source x]	**I/O Terminal 01 Stop**	**Normal Stop**
1 "Keypad"	Coast	Per P045 [Stop Mode]
2 "DigIn TrmBlk"	See t062, t063 [DigIn TermBlk xx] below	
3 "Serial/DSI"	Coast	
4 "Network Opt"	Coast	
5 "Ethernet/IP" (1)	Coast	

(1) Setting is specific to PowerFlex 525 drives only.

Start Method	Stop Method	
t062, t063 [DigIn TermBlk xx]	**I/O Terminal 01 Stop**	**Normal Stop**
48 "2-Wire FWD"	t064 [2-Wire Mode] is set to: • 0, 1, or 2 = Coast • 3 = per P045 [Stop Mode]	Per P045 [Stop Mode]
49 "3-Wire Start"	Per P045 [Stop Mode]	
50 "2-Wire REV"	t064 [2-Wire Mode] is set to: • 0, 1, or 2 = Coast • 3 = per P045 [Stop Mode]	
51 "3-Wire Dir"	Per P045 [Stop Mode]	

IMPORTANT The drive is shipped with a jumper installed between I/O Terminals 01 and 11. Remove this jumper when using I/O Terminal 01 as a stop or enable input.

(2) Two wire control shown. For three wire control use a momentary input on I/O Terminal 02 to command a start. Use a maintained input for I/O Terminal 03 to change direction.

(3) Analog output (terminal 15) is only available on PowerFlex 523 series B drive, and requires firmware 3.001 and later to configure the analog output parameters (t088, t089, and t090).

(4) Potentiometer connection is only applicable when the 0-10V setting (default) is selected for jumper J4.

(5) Only one analog frequency source may be connected at a time. If more than one reference is connected at the same time, an undetermined frequency reference will result.

Control I/O Terminal Designations

No.	Signal	Default	Description	Parameter
R1	Relay N.O.	Fault	Normally open contact for output relay.	t076
R2	Relay Common	Fault	Common for output relay.	
R3	Relay N.C.	Motor Running	Normally closed contact for output relay.	t081
01	Stop	Coast	Three wire stop. However, it functions as a stop under all input modes and cannot be disabled.	P045(2)
02	DigIn TermBlk 02/ Start/Run FWD	Run FWD	Used to initiate motion and also can be used as a programmable digital input. It can be programmed with t062 [DigIn TermBlk 02] as three wire (Start/Dir with Stop) or two wire (Run FWD/ Run REV) control. Current consumption is 6 mA.	P045, P046, P048, P050, A544, t062
03	DigIn TermBlk 03/ Dir/Run REV	Run REV	Used to initiate motion and also can be used as a programmable digital input. It can be programmed with t063 [DigIn TermBlk 03] as three wire (Start/Dir with Stop) or two wire (Run FWD/ Run REV) control. Current consumption is 6 mA.	t063
04	Digital Common	–	Return for digital I/O. Electrically isolated (along with the digital I/O) from the rest of the drive.	–
05	DigIn TermBlk 05/ Pulse In	Preset Freq	Program with t065 [DigIn TermBlk 05]. Also functions as a Pulse Train input for reference or speed feedback. Requires an NPN pulse input. The maximum frequency is 100 kHz. Current consumption is 6 mA.	t065
06	DigIn TermBlk 06	Preset Freq	Program with t066 [DigIn TermBlk 06]. Current consumption is 6 mA.	t066
11	+24V DC	–	Referenced to Digital Common. Drive supplied power for digital inputs. Maximum output current is 100 mA.	–
12	+10V DC	–	Referenced to Analog Common. Drive supplied power for 0...10V external potentiometer. Maximum output current is 15 mA.	P047, P049

Control I/O Terminal Designations

No.	Signal	Default	Description	Parameter
13	**For Series A** 0-10V In(1)	Not Active	For external 0-10V (unipolar) input supply or potentiometer wiper. Input impedance: Voltage source = 100 kΩ Allowable potentiometer resistance range = 1...10 kΩ	P047, P049, t062, t063, t065, t066, t093, A459, A471
	For Series B Analog Input	Not Active	External analog input supply, selectable by Analog Input jumper. Default is 0-10V (unipolar) input supply or potentiometer wiper. Input impedance: Voltage source = 100 kΩ Allowable potentiometer resistance range = 1...10 kΩ Change Analog Input jumper to 4-20 mA for external 4-20 mA input supply. Input impedance = 250 Ω	P047, P049, t062, t063, t065, t066, t093, A459, A471
14	Analog Common	–	Return for the analog I/O. Electrically isolated (along with the analog I/O) from the rest of the drive.	–
15	**For Series A** 4-20mA In(1)	Not Active	For external 4-20 mA input supply. Input impedance = 250 Ω	P047, P049, t062, t063, t065, t066, A459, A471
	For Series B Analog Output	OutFreq 0-10	The default analog output is 0-10V. To convert a current value, change the Analog Output jumper to 0-20 mA. Program with t088 [Analog Out Sel]. Maximum analog value can be scaled with t089 [Analog Out High]. Maximum Load: 4-20 mA = 525 Ω (10.5V) 0-10V = 1 kΩ (10 mA)	t088, t089
C1	C1	–	This terminal is tied to the RJ-45 port shield. Tie this terminal to a clean ground in order to improve noise immunity when using external communication peripherals.	–
C2	C2	–	This is the signal common for the communication signals.	–

(1) Only one analog frequency source may be connected at a time. If more than one reference is connected at the same time, an undetermined frequency reference will result.

(2) See Footnote (1) on page 39.

PowerFlex 525 Control I/O Terminal Block

PowerFlex 525 Control I/O Wiring Block Diagram

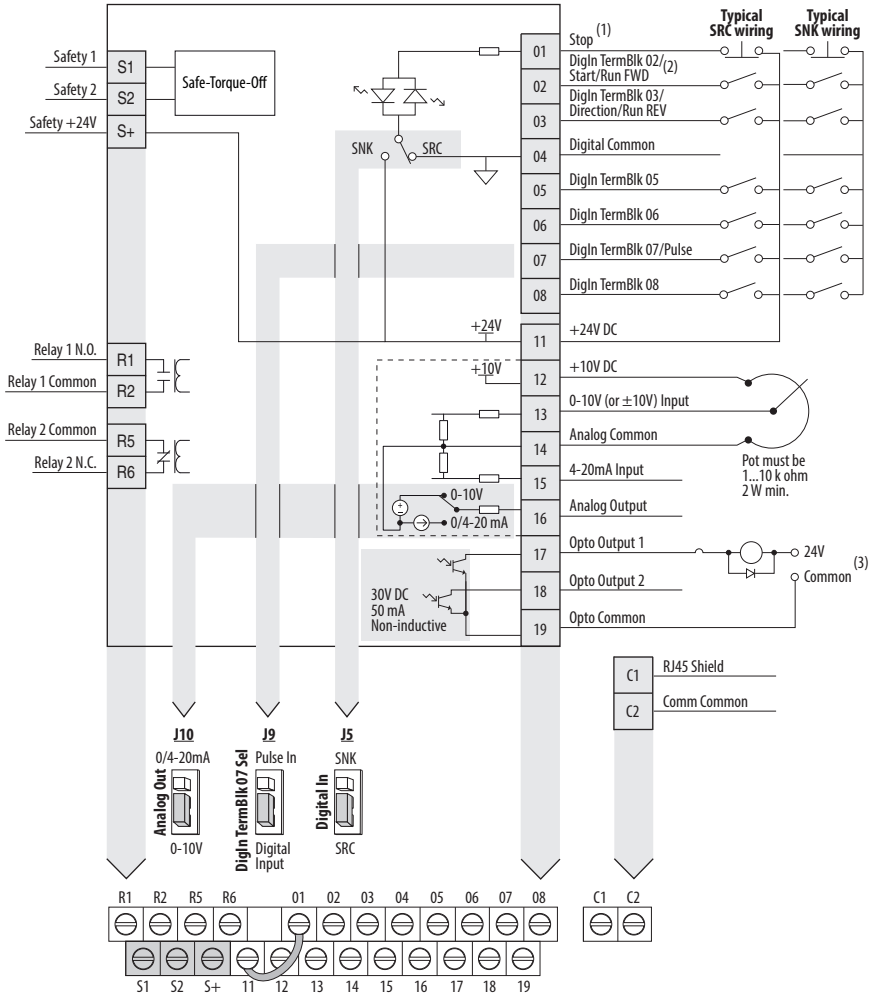

Control I/O Wiring Block Diagram Notes

(1) See Digital Input Selection for Start Source on page 50 for more information on configuring the digital inputs.

IMPORTANT I/O Terminal 01 is always a stop input. The stopping mode is determined by the drive setting. See the tables below for more information.

Start Method	Stop Method	
P046, P048, P050 [Start Source x]	**I/O Terminal 01 Stop**	**Normal Stop**
1 "Keypad"	Coast	Per P045 [Stop Mode]
2 "DigIn TrmBlk"	See t062, t063 [DigIn TermBlk xx] below	
3 "Serial/DSI"	Coast	
4 "Network Opt"	Coast	
5 "EtherNet/IP"	Coast	

Start Method	Stop Method	
t062, t063 [DigIn TermBlk xx]	**I/O Terminal 01 Stop**	**Normal Stop**
48 "2-Wire FWD"	t064 [2-Wire Mode] is set to: • 0, 1, or 2 = Coast • 3 = per P045 [Stop Mode]	Per P045 [Stop Mode]
49 "3-Wire Start"	Per P045 [Stop Mode]	
50 "2-Wire REV"	t064 [2-Wire Mode] is set to: • 0, 1, or 2 = Coast • 3 = per P045 [Stop Mode]	
51 "3-Wire Dir"	Per P045 [Stop Mode]	

IMPORTANT The drive is shipped with a jumper installed between I/O Terminals 01 and 11. Remove this jumper when using I/O Terminal 01 as a stop or enable input.

(2) Two wire control shown. For three wire control use a momentary input on I/O Terminal 02 to command a start. Use a maintained input for I/O Terminal 03 to change direction.

(3) When using an opto output with an inductive load such as a relay, install a recovery diode parallel to the relay as shown, to prevent damage to the output.

Control I/O Terminal Designations

No.	Signal	Default	Description	Parameter
R1	Relay 1 N.O.	Fault	Normally open contact for output relay.	t076
R2	Relay 1 Common	Fault	Common for output relay.	
R5	Relay 2 Common	Motor Running	Common for output relay.	t081
R6	Relay 2 N.C.	Motor Running	Normally closed contact for output relay.	
01	Stop	Coast	Three wire stop. However, it functions as a stop under all input modes and cannot be disabled.	P045(1)
02	DigIn TermBlk 02/ Start/Run FWD	Run FWD	Used to initiate motion and also can be used as a programmable digital input. It can be programmed with t062 [DigIn TermBlk 02] as three wire (Start/Dir with Stop) or two wire (Run FWD/ Run REV) control. Current consumption is 6 mA.	P045, P046, P048, P050, A544, t062
03	DigIn TermBlk 03/ Dir/Run REV	Run REV	Used to initiate motion and also can be used as a programmable digital input. It can be programmed with t063 [DigIn TermBlk 03] as three wire (Start/Dir with Stop) or two wire (Run FWD/ Run REV) control. Current consumption is 6 mA.	t063
04	Digital Common	–	Return for digital I/O. Electrically isolated (along with the digital I/O) from the rest of the drive.	–
05	DigIn TermBlk 05	Preset Freq	Program with t065 [DigIn TermBlk 05]. Current consumption is 6 mA.	t065
06	DigIn TermBlk 06	Preset Freq	Program with t066 [DigIn TermBlk 06]. Current consumption is 6 mA.	t066
07	DigIn TermBlk 07/ Pulse In	Start Source 2 + Speed Reference2	Program with t067 [DigIn TermBlk 07]. Also functions as a Pulse Train input for reference or speed feedback. Requires an NPN pulse input. Maximum frequency is 100 kHz. Current consumption is 6 mA.	t067
08	DigIn TermBlk 08	Jog Forward	Program with t068 [DigIn TermBlk 08]. Current consumption is 6 mA.	t068
C1	C1	–	This terminal is tied to the RJ-45 port shield. Tie this terminal to a clean ground in order to improve noise immunity when using external communication peripherals.	–
C2	C2	–	This is the signal common for the communication signals.	–
S1	Safety 1	–	Safety input 1. Current consumption is 6 mA.	–
S2	Safety 2	–	Safety input 2. Current consumption is 6 mA.	–
S+	Safety +24V	–	+24V supply for safety circuit. Internally tied to the +24V DC source (Pin 11).	–
11	+24V DC	–	Referenced to Digital Common. Drive supplied power for digital inputs. Maximum output current is 100 mA.	–

Control I/O Terminal Designations

No.	Signal	Default	Description	Parameter
12	+10V DC	–	Referenced to Analog Common. Drive supplied power for 0...10V external potentiometer. Maximum output current is 15 mA.	P047, P049
13	±10V In	Not Active	For external 0-10V (unipolar) or ±10V (bipolar) input supply or potentiometer wiper. Input impedance: Voltage source = 100 kΩ Allowable potentiometer resistance range = 1...10 kΩ	P047, P049, t062, t063, t065, t066, t093, A459, A471
14	Analog Common	–	Return for the analog I/O. Electrically isolated (along with the analog I/O) from the rest of the drive.	–
15	4-20mA In	Not Active	For external 4-20 mA input supply. Input impedance = 250 Ω	P047, P049, t062, t063, t065, t066, A459, A471
16	Analog Output	OutFreq 0-10	The default analog output is 0-10V. To convert a current value, change the Analog Output jumper to 0-20 mA. Program with t088 [Analog Out Sel]. Maximum analog value can be scaled with t089 [Analog Out High]. Maximum Load: 4-20 mA = 525 Ω (10.5V) 0-10V = 1 kΩ (10 mA)	t088, t089
17	Opto Output 1	Motor Running	Program with t069 [Opto Out1 Sel]. Each Opto-Output is rated 30V DC 50 mA (Non-inductive).	t069, t070, t075
18	Opto Output 2	At Frequency	Program with t072 [Opto Out1 Sel]. Each Opto-Output is rated 30V DC 50 mA (Non-inductive).	t072, t073, t075
19	Opto Common	–	The emitters of the Optocoupler Outputs (1 and 2) are tied together at Optocoupler Common. Electrically isolated from the rest of the drive.	–

(1) See Footnote (1) on page 39.

I/O Wiring Examples

<table>
<tr><th>I/O</th><th>Connection Example</th></tr>
<tr><td rowspan="2">Potentiometer
1...10k Ω Pot.
Recommended
(2 W minimum)</td><td>P047 [Speed Reference1] = 5 “0-10V Input”</td></tr>
<tr><td> 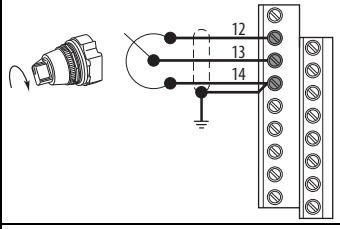
</td></tr>
<tr><td rowspan="4">Analog Input
0-10V, 100k Ω impedance
4-20 mA, 250 Ω impedance</td><td>Bipolar
P047 [Speed Reference1] = 5 “0-10V Input” and t093 [10V Bipolar Enbl] = 1 “Bi-Polar In”</td><td>Unipolar (Voltage)
P047 [Speed Reference1] = 5 “0-10V Input”</td></tr>
<tr><td> 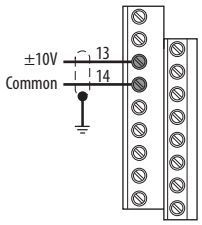
</td><td> 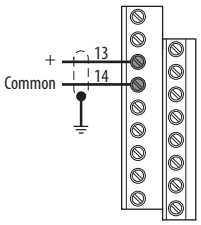
</td></tr>
<tr><td colspan="2">Unipolar (Current)
P047 [Speed Reference1] = 6 “4-20mA Input”</td></tr>
<tr><td colspan="2">PowerFlex 523 Series A, PowerFlex 525 PowerFlex 523 Series B
 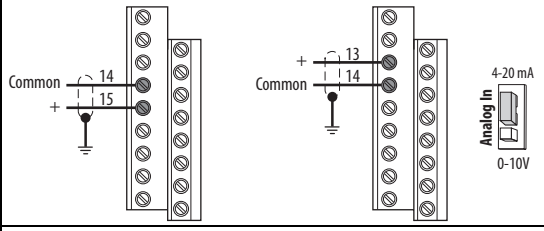
</td></tr>
<tr><td>Analog Input, PTC
For Drive Fault</td><td colspan="2">Wire the PTC and External Resistor (typically matched to the PTC Hot Resistance) to I/O Terminals 12, 13, 14.
Wire R2/R3 Relay Output (SRC) to I/O Terminals 5 & 11.
t065 [DigIn TermBlk 05] = 12 “Aux Fault”
t081 [Relay Out 2 Sel] = 10 “Above Anlg V”
t082 [Relay Out 2 Level] = % Voltage Trip</td></tr>
<tr><td></td><td colspan="2"> 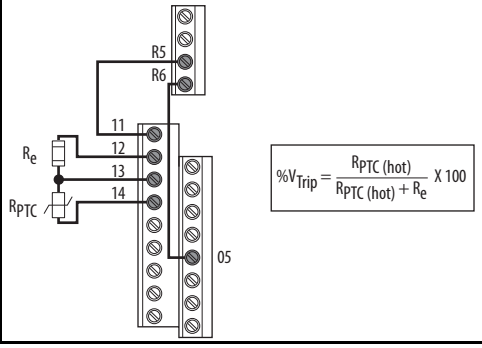
</td></tr>
</table>

I/O	Connection Example	
Pulse Train Input PowerFlex 523 t065 [DigIn TermBlk 05] = 52 PowerFlex 525 t067 [DigIn TermBlk 07] = 52 Use P047, P049 and P051 [Speed Referencex] to select pulse input. Jumper for DigIn TermBlk 05 or 07 Sel must be moved to Pulse In.	PowerFlex 523 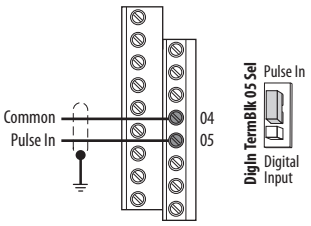 PowerFlex 525 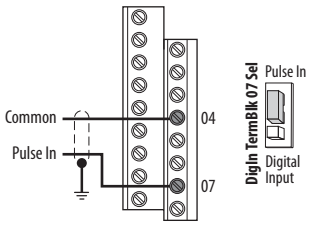 The device connected to terminal 5 (for PowerFlex 523) or terminal 7 (for PowerFlex 525) needs to be NPN or push-pull output driver.	
2 Wire SRC Control - Non-Reversing P046 [Start Source 1] = 2 and t062 [DigIn TermBlk 02] = 48 Input must be active for the drive to run. When input is opened, the drive will stop as specified by P045 [Stop Mode]. If desired, a User Supplied 24V DC power source can be used. Refer to the "External Supply (SRC)" example.	Internal Supply (SRC) 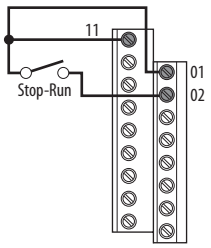	External Supply (SRC) 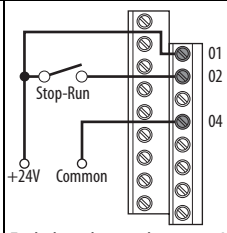 Each digital input draws 6 mA.
2 Wire SNK Control - Non-Reversing	Internal Supply (SNK) 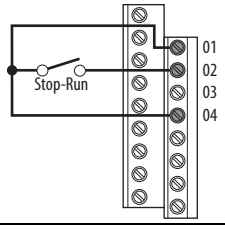	
2 Wire SRC Control - Run FWD/Run REV P046 [Start Source 1] = 2, t062 [DigIn TermBlk 02] = 48 and t063 [DigIn TermBlk 03] = 50 Input must be active for the drive to run. When input is opened, the drive will stop as specified by P045 [Stop Mode]. If both Run Forward and Run Reverse inputs are closed at the same time, an undetermined state could occur.	Internal Supply (SRC) 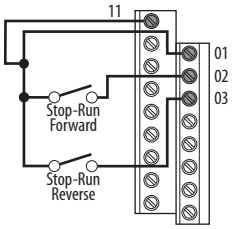	External Supply (SRC) 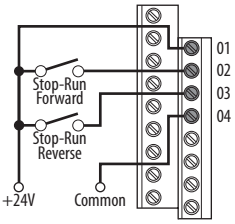 Each digital input draws 6 mA.
2 Wire SNK Control - Run FWD/Run REV	Internal Supply (SNK) 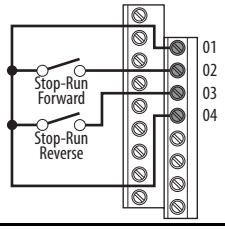	

<table>
<tr><th>I/O</th><th colspan="2">Connection Example</th></tr>
<tr><td rowspan="2">3 Wire SRC Control - Non-Reversing
P046 [Start Source 1] = 2, t062 [DigIn TermBlk 02] = 49 and t063 [DigIn TermBlk 03] = 51
A momentary input will start the drive. A stop input to I/O Terminal 01 will stop the drive as specified by P045 [Stop Mode].</td><td>Internal Supply (SRC)
 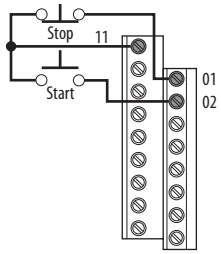
</td><td>External Supply (SRC)
 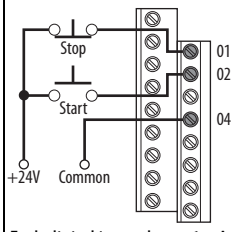

Each digital input draws 6 mA.</td></tr>
<tr><td>3 Wire SNK Control - Non-Reversing</td><td colspan="2">Internal Supply (SNK)
 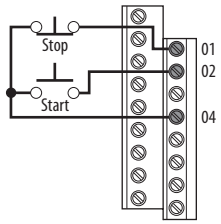
</td></tr>
<tr><td>3 Wire SRC Control - Reversing
P046 [Start Source 1] = 2, t062 [DigIn TermBlk 02] = 49 and t063 [DigIn TermBlk 03] = 51
A momentary input will start the drive. A stop input to I/O Terminal 01 will stop the drive as specified by P045 [Stop Mode]. I/O Terminal 03 determines direction.</td><td>Internal Supply (SRC)
 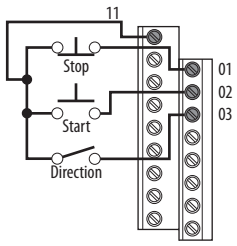
</td><td>External Supply (SRC)
 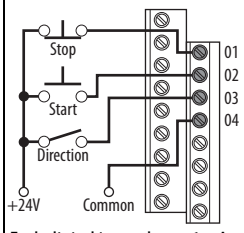

Each digital input draws 6 mA.</td></tr>
<tr><td>3 Wire SNK Control - Reversing</td><td colspan="2">Internal Supply (SNK)
 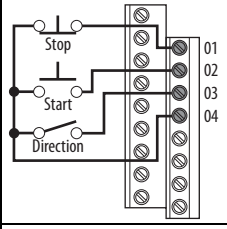
</td></tr>
<tr><td>Opto Output (1 & 2)[1]
<a>t069 [Opto Out1 Sel] determines Opto-Output 1 (I/O Terminal 17) operation.
<a>t072 [Opto Out2 Sel] determines Opto-Output 2 (I/O Terminal 18) operation.
When using Opto-Output with an inductive load such as a relay, install a recovery diode parallel to the relay as shown, to prevent damage to the output.</td><td colspan="2">Opto-Output 1
 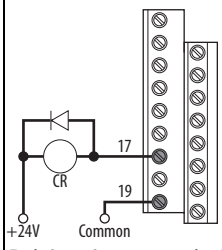

Each Opto-Output is rated 30V DC 50 mA (Non-inductive).</td></tr>
</table>

I/O	Connection Example
Analog Output[2] t088 [Analog Out Sel] determines analog output type and drive conditions. 0-10V, 1k Ω minimum 0-20 mA/4-20 mA, 525 Ω maximum	t088 [Analog Out Sel] = 0 through 23 The Analog Output Select jumper must be set to match the analog output signal mode set in t088 [Analog Out Sel]. **PowerFlex 523 Series B** **PowerFlex 525** 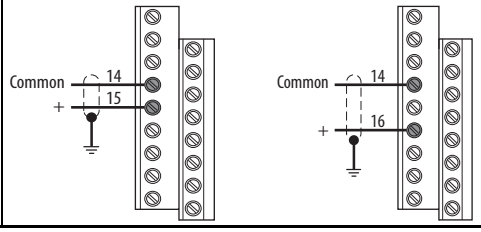

(1) Feature is specific to PowerFlex 525 drives only

(2) Feature is not applicable to PowerFlex 523 series A drives.

Typical Multiple Drive Connection Examples

Input/Output	Connection Example
Multiple Digital Input Connections Customer Inputs can be wired per External Supply (SRC).	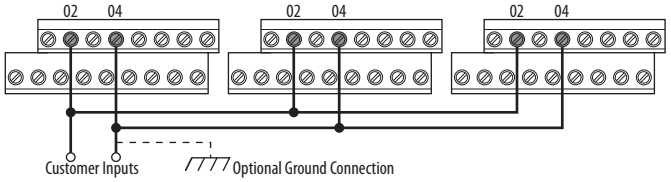 When connecting a single input such as Run, Stop, Reverse or Preset Speeds to multiple drives, it is important to connect I/O Terminal 04 common together for all drives. If they are to be tied into another common (such as earth ground or separate apparatus ground) only one point of the daisy chain of I/O Terminal 04 should be connected. **ATTENTION:** I/O Common terminals should **not** be tied together when using SNK (Internal Supply) mode. In SNK mode, if power is removed from one drive, inadvertent operation of other drives that share the same I/O Common connection may occur.
Multiple Analog Connections	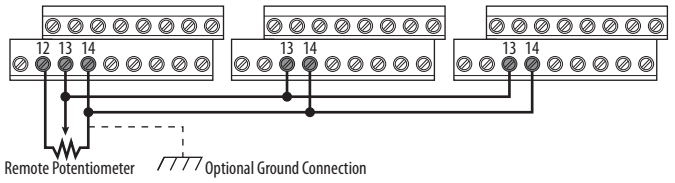 When connecting a single potentiometer to multiple drives it is important to connect I/O Terminal 14 common together for all drives. I/O Terminal 14 common and I/O Terminal 13 (potentiometer wiper) should be daisy-chained to each drive. All drives must be powered up for the analog signal to be read correctly.

Start and Speed Reference Control

Start Source and Speed Reference Selection

The start and drive speed command can be obtained from a number of different sources. By default, start source is determined by P046 [Start Source 1] and drive speed source is determined by P047 [Speed Reference1]. However, various inputs can override this selection, See below for the override priority.

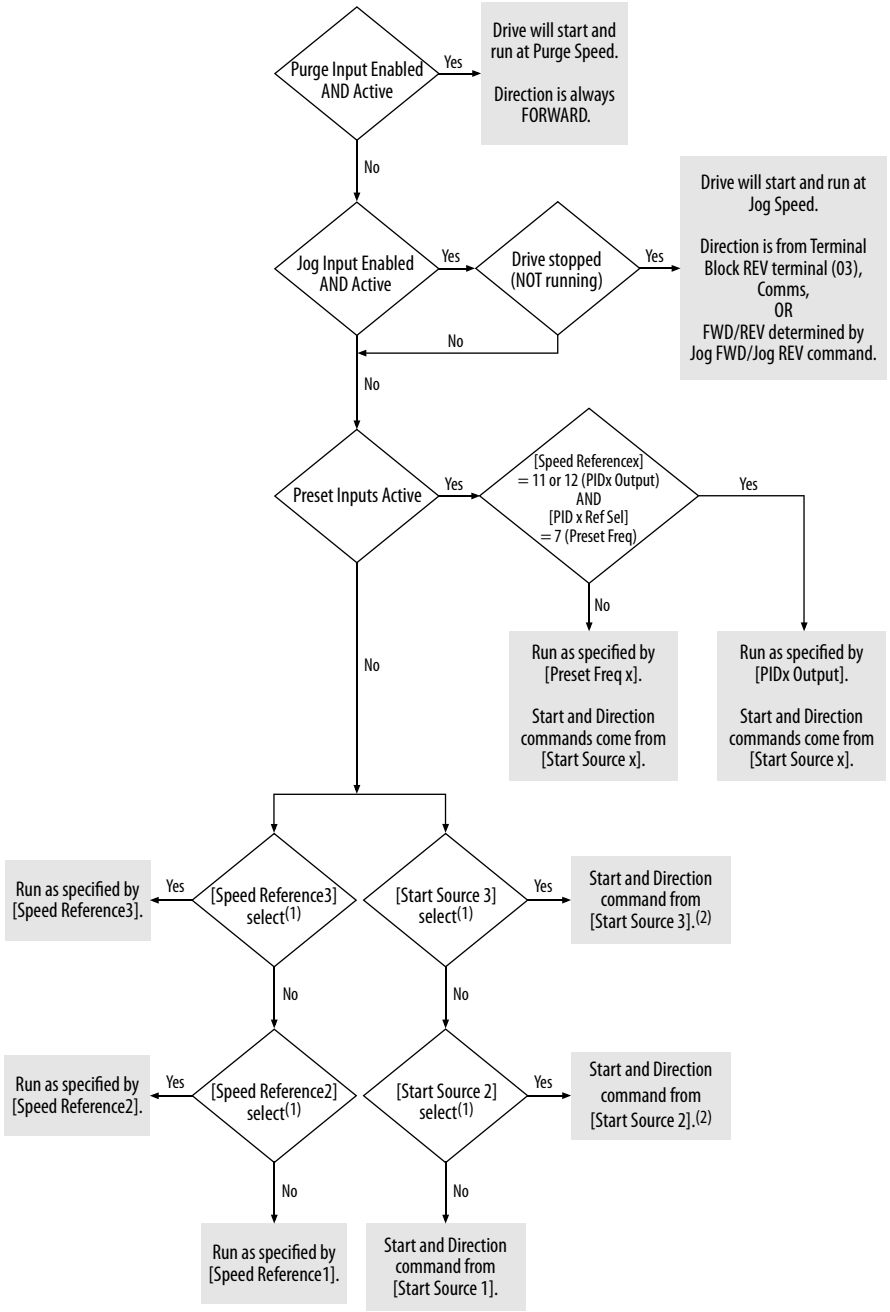

(1) [Start Source 2/3] and [Speed Reference2/3] can be selected by the control terminal block or communication commands.

(2) See Digital Input Selection for Start Source on page 50 for information on selecting the correct digital input.

Digital Input Selection for Start Source

If P046, P048 or P050 [Start Source x] has been set to 2, "DigIn TermBlk", then t062 and t063 [DigIn TermBlk xx] must be configured for 2-Wire or 3-Wire control for the drive to function properly.

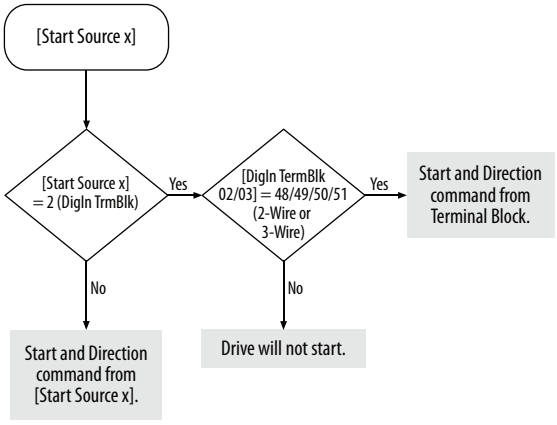

Accel/Decel Selection

The Accel/Decel rate can be obtained by a variety of methods. The default rate is determined by P041 [Accel Time 1] and P042 [Decel Time 1]. Alternative Accel/Decel rates can be made through digital inputs, communications and/or parameters. See below for the override priority.

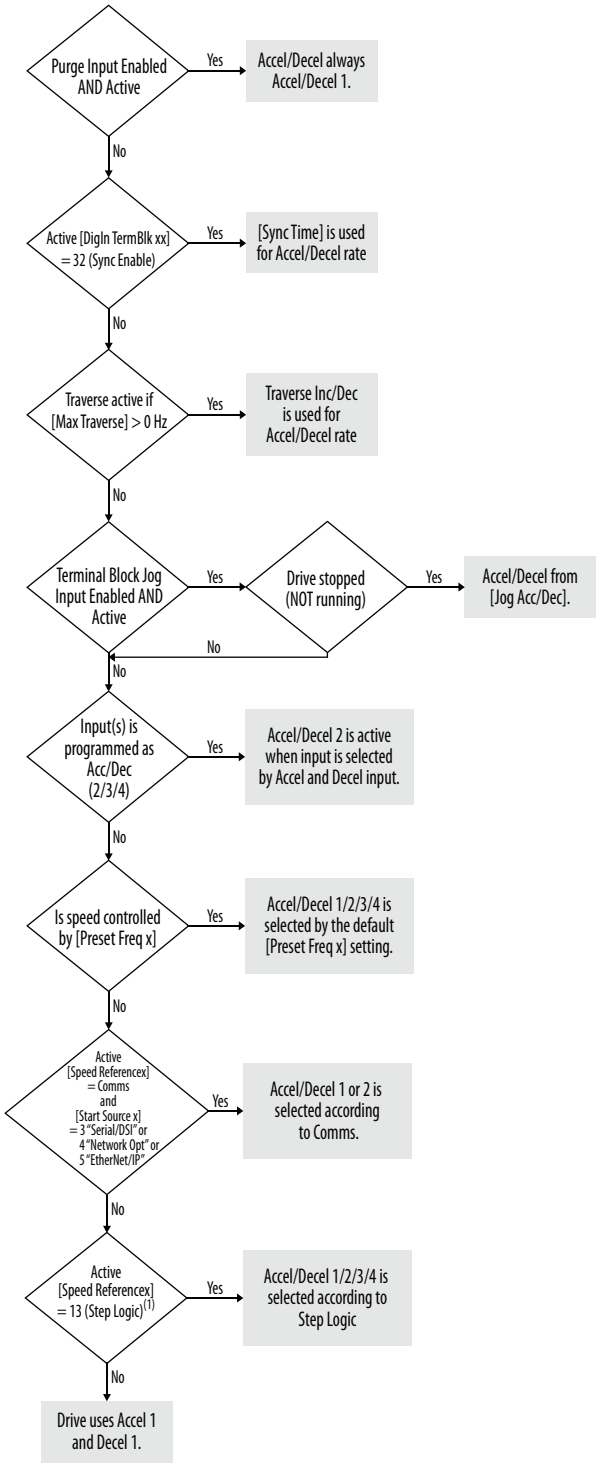

(1) Setting is specific to PowerFlex 525 drives only.

CE Conformity

Compliance with the Low Voltage Directive and Electromagnetic Compatibility Directive has been demonstrated using harmonized European Norm (EN) standards published in the Official Journal of the European Communities. PowerFlex 520-series drives comply with the EN standards listed below when installed according to the installation instructions in this manual.

CE Declarations of Conformity are available online at: http://www.rockwellautomation.com/products/certification/.

Low Voltage Directive (2006/95/EC and 2014/35/EU)

- EN 61800-5-1 Adjustable speed electrical power drive systems – Part 5-1: Safety requirements – Electrical, thermal and energy.

Pollution Degree Ratings According to EN 61800-5-1

Pollution Degree	Description
1	No pollution or only dry, non-conductive pollution occurs. The pollution has no influence.
2	Normally, only non-conductive pollution occurs. Occasionally, however, a temporary conductivity caused by condensation is to be expected, when the drive is out of operation.

EMC Directive (2004/108/EC and 2014/30/EU)

- EN 61800-3 – Adjustable speed electrical power drive systems - Part 3: EMC requirements and specific test methods

Machinery Directive (2006/42/EC)

- EN ISO 13849-1 – Safety of machinery – Safety related parts of control systems -Part 1: General principles for design
- EN 62061 – Safety of machinery – Functional safety of safety-related electrical, electronic and programmable electronic control systems
- EN 60204-1 – Safety of machinery – Electrical equipment of machines - Part 1: General requirements
- EN 61800-5-2 – Adjustable speed electrical power drive systems - Part 5-2: Safety requirement – Functional

Refer to Appendix G for installation consideration related to Machinery Directive.

ATEX Directive (94/9/EC and 2014/34/EU)

- EN 50495 – Safety devices required for the safe functioning of equipment with respect to explosion risks.

General Considerations

- For CE compliance, drives must satisfy installation requirements related to both EN 61800-5-1 and EN 61800-3 provided in this document.
- PowerFlex 520-series drives must be installed in a pollution degree 1 or 2 environment to be compliant with the CE LV Directive. See Pollution Degree Ratings According to EN 61800-5-1 on page 52 for descriptions of each pollution degree rating.
- PowerFlex 520-series drives comply with the EMC requirements of EN 61800-3 when installed according to good EMC practices and the instructions provided in this document. However, many factors can influence the EMC compliance of an entire machine or installation, and compliance of the drive itself does not ensure compliance of all applications.
- PowerFlex 520-series drives are not intended to be used on public low-voltage networks which supply domestic premises. Without additional mitigation, radio frequency interference is expected if used on such a network. The installer is responsible for taking measures such as a supplementary line filter and enclosure (see Connections and Grounding on page 55) to prevent interference, in addition to the installation requirements of this document.

ATTENTION: NEMA/UL Open Type drives must either be installed in a supplementary enclosure or equipped with a "NEMA Type 1 Kit" to be CE compliant with respect to protection against electrical shock.

- PowerFlex 520-series drives generate harmonic current emissions on the AC supply system. When operated on a public low-voltage network it is the responsibility of the installer or user to ensure that applicable requirements of the distribution network operator have been met. Consultation with the network operator and Rockwell Automation may be necessary.
- If the optional NEMA 1 kit is not installed, the drive must be installed in an enclosure with side openings less than 12.5 mm (0.5 in.) and top openings less than 1.0 mm (0.04 in.) to maintain compliance with the LV Directive.
- The motor cable should be kept as short as possible in order to avoid electromagnetic emission as well as capacitive currents.
- Use of line filters in ungrounded systems is not recommended.
- In CE installations, input power must be a Balanced Wye with Center Ground configuration for EMC compliance.

Installation Requirements Related to EN 61800-5-1 and the Low Voltage Directive

- 600V PowerFlex 520-series drives can only be used on a "center grounded" supply system for altitudes up to and including 2000 m (6562 ft).

- When used at altitudes above 2000 m (6562 ft) up to a maximum of 4800 m (15,748 ft), PowerFlex 520-series drives of voltage classes up to 480V may not be powered from a "corner-earthed" supply system in order to maintain compliance with the CE LV Directive. See Derating Guidelines for High Altitude on page 18.
- PowerFlex 520-series drives produce leakage current in the protective earthing conductor which exceeds 3.5 mA AC and/or 10 mA DC. The minimum size of the protective earthing (grounding) conductor used in the application must comply with local safety regulations for high protective earthing conductor current equipment.

ATTENTION: PowerFlex 520-series drives produce DC current in the protective earthing conductor which may reduce the ability of RCD's (residual current-operated protective devices) or RCM's (residual current-operated monitoring devices) of type A or AC to provide protection for other equipment in the installation. Where an RCD or RCM is used for protection in case of direct or indirect contact, only an RCD or RCM of Type B is allowed on the supply side of this product.

Installation Requirements Related to EN 61800-3 and the EMC Directive

- The drive must be earthed (grounded) as described in Connections and Grounding on page 55. See General Grounding Requirements on page 20 for additional grounding recommendations.
- Output power wiring to the motor must employ cables with a braided shield providing 75% or greater coverage, or the cables must be housed in metal conduit, or equivalent shield must be provided. Continuous shielding must be provided from the drive enclosure to the motor enclosure. Both ends of the motor cable shield (or conduit) must terminate with a low-impedance connection to earth.
  Drive Frames A...E: At the drive end of the motor, either
  a. The cable shield must be clamped to a properly installed "EMC Plate" for the drive. Kit number 25-EMC1-Fx.
     or
  b. The cable shield or conduit must terminate in a shielded connector installed in an EMC plate, conduit box, or similar.
- At the motor end, the motor cable shield or conduit must terminate in a shielded connector which must be properly installed in an earthed motor wiring box attached to the motor. The motor wiring box cover must be installed and earthed.
- All control (I/O) and signal wiring to the drive must use cable with a braided shield providing 75% or greater coverage, or the cables must be housed in metal conduit, or equivalent shielding must be provided. When shielded cable is used, the cable shield should be terminated with a low impedance connection to earth at only one end of the cable, preferably the end where the receiver is located. When the cable shield is terminated at the drive end, it may be terminated either by using a shielded connector in conjunction with a conduit plate or conduit box, or the shield may be clamped to an "EMC plate."

- Motor cabling must be separated from control and signal wiring wherever possible.
- Maximum motor cable length must not exceed the maximum length indicated in PowerFlex 520-Series RF Emission Compliance and Installation Requirements on page 55 for compliance with radio frequency emission limits for the specific standard and installation environment.

Connections and Grounding

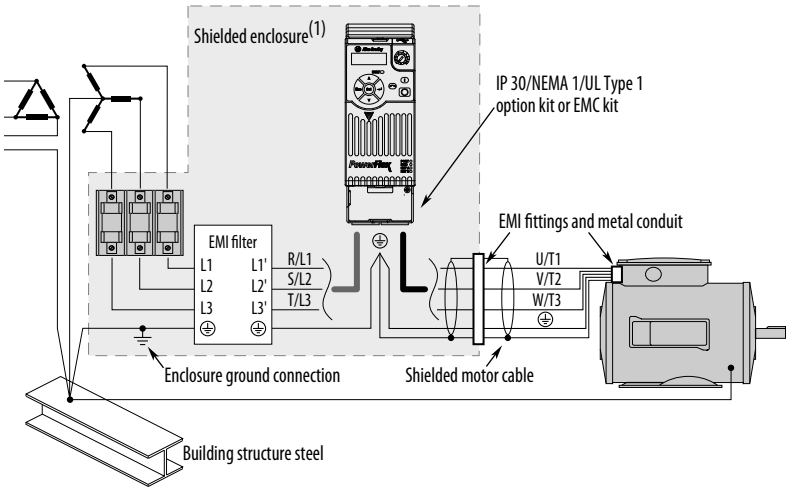

(1) Some installations require a shielded enclosure. Keep wire length as short as possible between the enclosure entry point and the EMI filter.

PowerFlex 520-Series RF Emission Compliance and Installation Requirements

Filter Type	Standard/Limits		
	EN61800-3 Category C1 EN61000-6-3 CISPR11 Group 1 Class B	**EN61800-3 Category C2 EN61000-6-4 CISPR11 Group 1 Class A (Input power ≤ 20 kVA)**	**EN61800-3 Category C3 (I ≤ 100 A) CISPR11 Group 1 Class A (Input power > 20 kVA)**
Internal	–	10 m (33 ft)	20 m (66 ft)
External(1)	30 m (16 ft)	100 m (328 ft)	100 m (328 ft)

(1) See Appendix B for more information on optional external filters.

Additional Installation Requirements

This section provides information on additional requirements for category C1 and C2 installation, such as enclosures and EMC cores.

IMPORTANT EMC cores are included with:

- drives that have an internal EMC filter (25x-xxxxN114)
- external EMC filter accessory kit (25-RFxxx)

IMPORTANT An enclosure, shielded input cable, and EMC cores are not required to meet category C3 requirements.

Additional Installation Requirements

Frame Size	Category C1			Category C2		
	Enclosure	Conduit or Shielded Cable @ Input	EMC Cores Required (Included with product)	Enclosure	Conduit or Shielded Cable @ Input	EMC Cores Required (Included with product)
100...120V AC (-15%, +10%) – 1-Phase Input with External EMC Filter, 0...120V 1-Phase Output						
A	No	No	No	No	No	No
B	No	No	No	No	No	No
200...240V AC (-15%, +10%) – 1-Phase Input with External EMC Filter, 0...230V 3-Phase Output						
A	Yes	Yes	No	No	No	Input/Output
B	Yes	Yes	Output only	No	No	Input/Output
200...240V AC (-15%, +10%) – 1-Phase Input with Internal EMC Filter, 0...230V 3-Phase Output(1)						
A	*	*	*	Yes	No	No
B	*	*	*	Yes	No	No
200...240V AC (-15%, +10%) – 3-Phase Input with External EMC Filter, 0...230V 3-Phase Output						
A	Yes	Yes	Output only	No	No	Input/Output
B	Yes	Yes	Output only	No	No	Input/Output
C	Yes	Yes	Output only	No	No	Input/Output
D	Yes	Yes	No	No	No	Input only
E	Yes	Yes	Output only	No	No	Input only
380...480V AC (-15%, +10%) – 3-Phase Input with External EMC Filter, 0...460V 3-Phase Output						
A	Yes	Yes	No	No	No	Input/Output
B	Yes	Yes	No	No	No	Input/Output
C	Yes	Yes	No	No	No	Input only
D	Yes	Yes	Output only	No	No	Input/Output
E	Yes	Yes	No	Yes	No	Input/Output
380...480V AC (-15%, +10%) – 3-Phase Input with Internal EMC Filter, 0...460V 3-Phase Output(1)						
A	*	*	*	No	No	Input/Output
B	*	*	*	No	No	Input/Output
C	*	*	*	No	No	Input/Output
D	*	*	*	No	No	Input/Output
E	*	*	*	No	No	Input/Output
525...600V AC (-15%, +10%) – 3-Phase Input with External EMC Filter, 0...575V 3-Phase Output						
A	Yes	Yes	No	No	No	Input/Output
B	Yes	Yes	No	No	No	Input/Output
C	Yes	Yes	No	No	No	Input/Output
D	Yes	Yes	No	No	No	Input/Output
E	Yes	Yes	No	Yes	No	No

(1) An (*) indicates that EMC requirements are not met.

Recommended Placement of EMC Cores

Frame A	Frame B	Frame C	Frame D	Frame E
With optional EMC plate (25-EMC-Fx)				
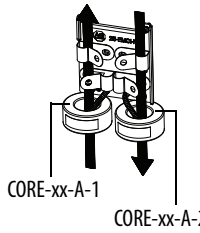	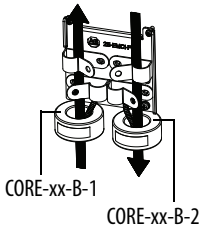	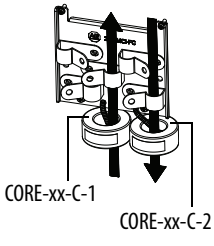	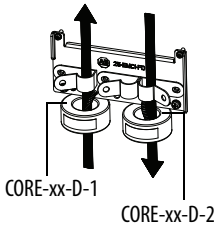	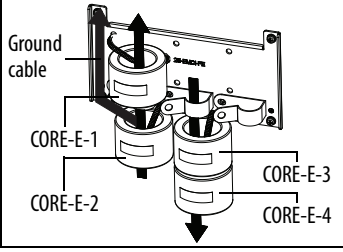
Without EMC plate				
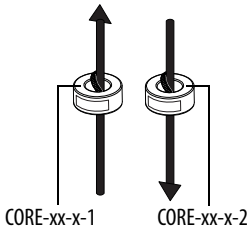				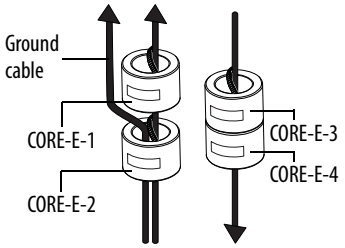

Input cable to drive (Shielded or Unshielded) Output cable from drive (Shielded)

Shows contact to shielded layer

Secure EMC core by using cable/zip ties

IMPORTANT The ground cable/shield for both input and output must pass through the EMC core(s), except for the following:

- Frame E drives with internal filters where the grounded input cable must not pass through EMC CORE-E-1.
- 600V drives with external filters where the grounded output cable must not pass through the EMC core(s).

Recommended Placement of EMC Cores Relative to External Filter

All Frame sizes

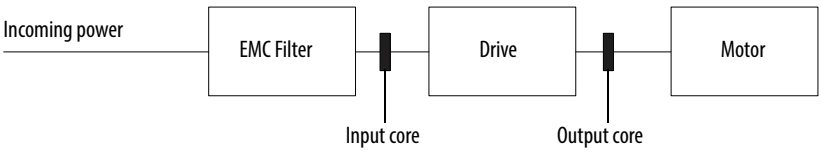

Notes:

Start Up

This chapter describes how to start up the PowerFlex 520-series drive. To simplify drive setup, the most commonly programmed parameters are organized in a single Basic Program Group.

For information on...	See page...
Prepare for Drive Start-Up	59
Display and Control Keys	62
Viewing and Editing Parameters	63
Drive Programming Tools	64
Smart Start-Up with Basic Program Group Parameters	65
LCD Display with QuickView Technology	67
Using the USB Port	67

IMPORTANT Read the *General Precautions* section before proceeding.

ATTENTION: Power must be applied to the drive to perform the following start-up procedures. Some of the voltages present are at incoming line potential. To avoid electric shock hazard or damage to equipment, only qualified service personnel should perform the following procedure. Thoroughly read and understand the procedure before beginning. If an event does not occur while performing this procedure, **Do Not Proceed. Remove All Power** including user supplied control voltages. User supplied voltages may exist even when main AC power is not applied to the drive. Correct the malfunction before continuing.

Prepare for Drive Start-Up

Drive Startup Task List

1. Disconnect and lock out power to the machine.
2. Verify that AC line power at the disconnect device is within the rated value of the drive.
3. If replacing a drive, verify the current drive's catalog number. Verify all options installed on the drive.
4. Verify that any digital control power is 24 volts.
5. Inspect grounding, wiring, connections, and environmental compatibility.

6. Verify that the Sink (SNK)/Source (SRC) jumper is set to match your control wiring scheme. See the PowerFlex 523 Control I/O Wiring Block Diagram on page 38 and PowerFlex 525 Control I/O Wiring Block Diagram on page 42 for location.

IMPORTANT The default control scheme is Source (SRC). The Stop terminal is jumpered to allow starting from the keypad or comms. If the control scheme is changed to Sink (SNK), the jumper must be removed from I/O Terminals 01 and 11 and installed between I/O Terminals 01 and 04.

7. Wire I/O as required for the application.
8. Wire the power input and output terminals.
9. Confirm that all inputs are connected to the correct terminals and are secure.
10. Collect and record motor nameplate and encoder or feedback device information. Verify motor connections.
    - Is the motor uncoupled?
    - What direction will the motor need to turn for the application?
11. Verify the input voltage to the drive. Verify if the drive is on a grounded system. Ensure the MOV jumpers are in the correct position. See AC Supply Source Considerations on page 19 for more information.
12. Apply power and reset the drive and communication adapters to factory default settings. To reset the drive, see parameter P053 [Reset to Defalts]. To reset the communication adapters, see the user manual of the adapter for more information.
13. Configure the basic program parameters related to the motor. See Smart Start-Up with Basic Program Group Parameters on page 65.
14. Complete the autotune procedure for the drive. See parameter P040 [Autotune] for more information.
15. If you are replacing a drive and have a backup of the parameter settings obtained using the USB utility application, use the USB utility application to apply the backup to the new drive. See Using the USB Port on page 67 for more information.

    Otherwise, set the necessary parameters for your application using the LCD keypad interface, Connected Components Workbench, or RSLogix or Logix Designer if using an Add-on Profile through EtherNet/IP.
    - Configure the communication parameters needed for the application (node number, IP address, Datalinks in and out, communication rate, speed reference, start source, and so on). Record these settings for your reference.
    - Configure the other drive parameters needed for the drive analog and digital I/O to work correctly. Verify the operation. Record these settings for your reference.

16. Verify the drive and motor perform as specified.
    - Verify that the Stop input is present or the drive will not start.

    IMPORTANT If I/O Terminal 01 is used as a stop input, the jumper between I/O Terminals 01 and 11 must be removed.

    - Verify the drive is receiving the speed reference from the correct place and that the reference is scaled correctly.
    - Verify the drive is receiving start and stop commands correctly.
    - Verify input currents are balanced.
    - Verify motor currents are balanced.
17. Save a backup of the drive settings using the USB utility application. See Using the USB Port on page 67 for more information.

Start, Stop, Direction and Speed Control

Factory default parameter values allow the drive to be controlled from the keypad. No programming is required to start, stop, change direction and control speed directly from the keypad.

IMPORTANT To disable reverse operation, see A544 [Reverse Disable].

If a fault appears on power up, see Fault Descriptions on page 159 for an explanation of the fault code.

Variable Torque Fan/Pump Applications

For improved motor and drive performance, tune the motor in SVC mode using parameter P040 [Autotune]. If V/Hz mode is selected, use parameter A530 [Boost Select] to adjust the boost.

Display and Control Keys

PowerFlex 523

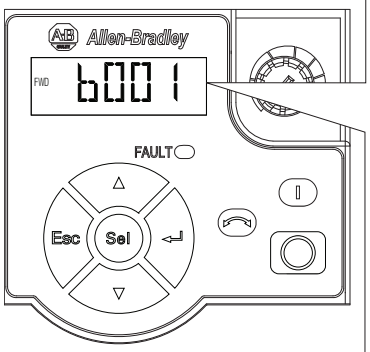

PowerFlex 525

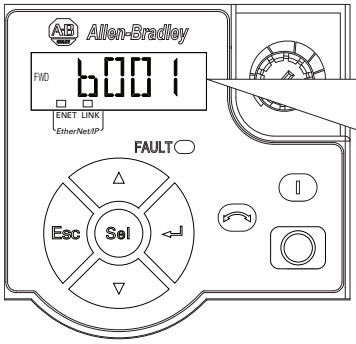

Menu	Parameter Group and Description
b	**Basic Display** Commonly viewed drive operating conditions.
P	**Basic Program** Commonly used programmable functions.
t	**Terminal Blocks** Programmable terminal functions.
C	**Communications** Programmable communication functions.
L	**Logic (PowerFlex 525 only)** Programmable logic functions.
d	**Advanced Display** Advanced drive operating conditions.
A	**Advanced Program** Remaining programmable functions.
N	**Network** Network functions that are shown only when a comm card is used.
M	**Modified** Functions from the other groups with values changed from default.
F	**Fault and Diagnostic** Consists of list of codes for specific fault conditions.
G	**AppView and CustomView** Functions from the other groups organized for specific applications.

Control and Navigation Keys

Display	Display State	Description
ENET (PowerFlex 525 only)	Off	Adapter is not connected to the network.
	Steady	Adapter is connected to the network and drive is controlled through Ethernet.
	Flashing	Adapter is connected to the network but drive is not controlled through Ethernet.
LINK (PowerFlex 525 only)	Off	Adapter is not connected to the network.
	Steady	Adapter is connected to the network but not transmitting data.
	Flashing	Adapter is connected to the network and transmitting data.

LED	LED State	Description
FAULT	Flashing Red	Indicates drive is faulted.

Key	Name	Description
	Up Arrow Down Arrow	Scroll through user-selectable display parameters or groups. Increment values.
	Escape	Back one step in programming menu. Cancel a change to a parameter value and exit Program Mode.
	Select	Advance one step in programming menu. Select a digit when viewing parameter value.
	Enter	Advance one step in programming menu. Save a change to a parameter value.

Key	Name	Description
	Reverse	Used to reverse direction of the drive. Default is active. Controlled by parameters P046, P048 and P050 [Start Source x] and A544 [Reverse Disable].
	Start	Used to start the drive. Default is active. Controlled by parameters P046, P048 and P050 [Start Source x].
	Stop	Used to stop the drive or clear a fault. This key is always active. Controlled by parameter P045 [Stop Mode].
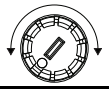	Potentiometer	Used to control speed of drive. Default is active. Controlled by parameters P047, P049 and P051 [Speed Referencex].

Viewing and Editing Parameters

The following is an example of basic integral keypad and display functions. This example provides basic navigation instructions and illustrates how to program a parameter.

Step	Key(s)	Example Display
1. When power is applied, the last user-selected Basic Display Group parameter number is briefly displayed with flashing characters. The display then defaults to that parameter's current value. (Example shows the value of b001 [Output Freq] with the drive stopped.)		
2. Press Esc to display the Basic Display Group parameter number shown on power-up. The parameter number will flash.		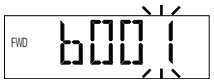
3. Press Esc to enter the parameter group list. The parameter group letter will flash.		
4. Press the Up Arrow or Down Arrow to scroll through the group list (b, P, t, C, L, d, A, f and Gx).	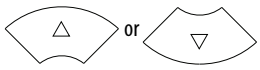	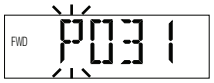
5. Press Enter or Sel to enter a group. The right digit of the last viewed parameter in that group will flash.	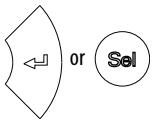	
6. Press the Up Arrow or Down Arrow to scroll through the parameter list.	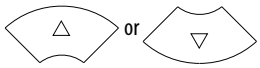	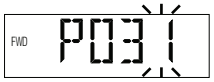
7. Press Enter to view the value of the parameter. Or Press Esc to return to the parameter list.		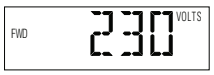
8. Press Enter or Sel to enter Program Mode and edit the value. The right digit will flash and the word Program on the LCD display will light up.	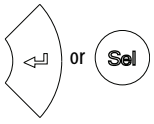	
9. Press the Up Arrow or Down Arrow to change the parameter value.	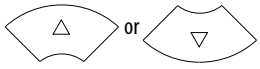	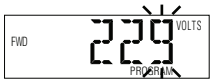

Step	Key(s)	Example Display
10. If desired, press Sel to move from digit to digit or bit to bit. The digit or bit that you can change will flash. 11. Press Esc to cancel a change and exit Program Mode. Or Press Enter to save a change and exit Program Mode. The digit will stop flashing and the word Program on the LCD display will turn off. 12. Press Esc to return to the parameter list. Continue to press Esc to back out of the programming menu. If pressing Esc does not change the display, then b001 [Output Freq] is displayed. Press Enter or Sel to enter the group list again.	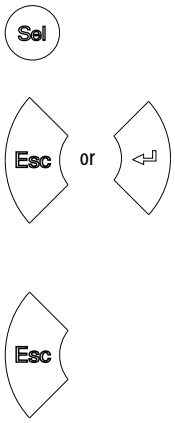	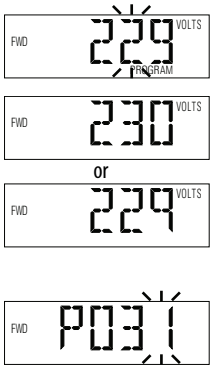

Drive Programming Tools

Some features in the PowerFlex 520-series drive are not supported by older configuration software tools. It is strongly recommended that customers using such tools migrate to RSLogix 5000 (version 17.0 or greater) or Logix Designer (version 21.0 or greater) with Add-On-Profile (AOP), or Connected Components Workbench (version 5.0 or greater) to enjoy a richer, full-featured configuration experience. For Automatic Device Configuration (ADC) support, RSLogix 5000 version 20.0 or greater is required.

Description	Catalog Number/Release Version
Connected Components Workbench(1)	Version 5.0 or greater
Logix Designer	Version 21.0 or greater
RSLogix 5000	Version 17.0 or greater
Built-in USB software tool	–
Serial Converter Module(2)	22-SCM-232
USB Converter Module(2)	1203-USB
Remote Panel Mount, LCD Display(2)	22-HIM-C2S
Remote Handheld, LCD Display(2)	22-HIM-A3

(1) Available as a free download at http://ab.rockwellautomation.com/programmable-controllers/connected-components-workbench-software.

(2) Does not support the new dynamic parameter groups (AppView, CustomView), and CopyCat functionality is limited to the linear parameter list.

Language Support

Language	Keypad/LCD Display	RSLogix 5000/ Logix Designer	Connected Components Workbench
English	Y	Y	Y
French	Y	Y	Y
Spanish	Y	Y	Y
Italian	Y	Y	Y
German	Y	Y	Y
Japanese	–	Y	–
Portuguese	Y	Y	–
Chinese Simplified	–	Y	Y
Korean	–	Y	–

Language	Keypad/LCD Display	RSLogix 5000/ Logix Designer	Connected Components Workbench
Polish(1)	Y	–	–
Turkish(1)	Y	–	–
Czech(1)	Y	–	–

(1) Due to a limitation of the LCD Display, some of the characters for Polish, Turkish, and Czech will be modified.

Smart Start-Up with Basic Program Group Parameters

The PowerFlex 520-series drive is designed so that start up is simple and efficient. The Basic Program Group contains the most commonly used parameters. See Programming and Parameters on page 71 for detailed descriptions of the parameters listed here, as well as the full list of available parameters.

= Stop drive before changing this parameter.
PF 525 = Parameter is specific to PowerFlex 525 drives only.

No.	Parameter	Min/Max	Display/Options	Default
P030	[Language]	1/15	1 = English 2 = Français 3 = Español 4 = Italiano 5 = Deutsch 6 = Reserved 7 = Português 8 = Reserved 9 = Reserved 10 = Reserved 11 = Reserved 12 = Polish 13 = Reserved 14 = Turkish 15 = Czech	1
	Selects the language displayed. **Important:** The setting takes effect after the drive is power cycled.			
P031	[Motor NP Volts]	10V (for 200V Drives), 20V (for 400V Drives), 25V (for 600V Drives)/Drive Rated Volts	1V	Based on Drive Rating
	Sets the motor nameplate rated volts.			
P032	[Motor NP Hertz]	15/500 Hz	1 Hz	60 Hz
	Sets the motor nameplate rated frequency.			
P033	[Motor OL Current]	0.0/(Drive Rated Amps x 2)	0.1 A	Based on Drive Rating
	Sets the motor nameplate overload current.			
P034	[Motor NP FLA]	0.0/(Drive Rated Amps x 2)	0.1 A	Drive Rated Amps
	Sets the motor nameplate FLA.			
P035	[Motor NP Poles]	2/40	1	4
	Sets the number of poles in the motor.			
P036	[Motor NP RPM]	0/24000 rpm	1 rpm	1750 rpm
	Sets the rated nameplate rpm of motor.			
P037 PF 525	[Motor NP Power]	0.00/Drive Rated Power	0.01 kW	Drive Rated Power
	Sets the motor nameplate power. Used in PM regulator.			
P038	[Voltage Class]	2/3	2 = “480V” 3 = “600V”	3
	Sets the voltage class of 600V drives. Only applicable to 600V drives.			

= Stop drive before changing this parameter.
PF 525 = Parameter is specific to PowerFlex 525 drives only.

No.	Parameter	Min/Max	Display/Options	Default
P039	[Torque Perf Mode]	0/4	0 = "V/Hz" 1 = "SVC" 2 = "Economize" 3 = "Vector"(1) 4 = "PM Control"(1)(2)(3)	1
	Selects the motor control mode. (1) Setting is specific to PowerFlex 525 drives only. (2) Setting is available in PowerFlex 525 FRN 5.xxx and later. (3) When P039 [Torque Perf Mode] is set to 4 and A535 [Motor Fdbk Type] is set to 0, 1, 2 or 3, the drive is in open loop PM motor control mode. When P039 [Torque Perf Mode] is set to 4 and A535 [Motor Fdbk Type] is set to 4 or 5, the drive is in closed loop PM motor control mode.			
P040	[Autotune]	0/2	0 = "Ready/Idle" 1 = "Static Tune" 2 = "Rotate Tune"	0
	Enables a static (not spinning) or dynamic (motor spinning) autotune.			
P041	[Accel Time 1]	0.00/600.00 s	0.01 s	10.00 s
	Sets the time for the drive to accel from 0 Hz to [Maximum Freq].			
P042	[Decel Time 1]	0.00/600.00 s	0.01 s	10.00 s
	Sets the time for the drive to decel from [Maximum Freq] to 0 Hz.			
P043	[Minimum Freq]	0.00/500.00 Hz	0.01 Hz	0.00 Hz
	Sets the lowest frequency the drive outputs.			
P044	[Maximum Freq]	0.00/500.00 Hz	0.01 Hz	60.00 Hz
	Sets the highest frequency the drive outputs.			
P045	[Stop Mode]	0/11	0 = "Ramp, CF"(1) 1 = "Coast, CF"(1) 2 = "DC Brake, CF"(1) 3 = "DCBrkAuto,CF"(1) 4 = "Ramp" 5 = "Coast" 6 = "DC Brake" 7 = "DC BrakeAuto" 8 = "Ramp+EM B,CF"(1) 9 = "Ramp+EM Brk" 10 = "PointStp,CF"(1) 11 = "PointStop"	0
	Stop command for normal stop. **Important:** I/O Terminal 01 is always a stop input. The stopping mode is determined by the drive setting. **Important:** The drive is shipped with a jumper installed between I/O Terminals 01 and 11. Remove this jumper when using I/O Terminal 01 as a stop or enable input. (1) Stop input also clears active fault.			
P046, P048, P050	[Start Source 1]	1/5	1 = "Keypad"(1) 2 = "DigIn TrmBlk"(2) 3 = "Serial/DSI" 4 = "Network Opt" 5 = "Ethernet/IP"(3)	P046 = 1 P048 = 2 P050 = 3 (PowerFlex 523) 5 (PowerFlex 525)
	Sets the default control scheme used to start the drive unless overriden by P048 [Start Source 2] or P050 [Start Source 3]. (1) When active, the Reverse key is also active unless disabled by A544 [Reverse Disable]. (2) If "DigIn TrmBlk" is selected, ensure that the digital inputs are properly configured. (3) Setting is specific to PowerFlex 525 drives only.			

= Stop drive before changing this parameter.
PF 525 = Parameter is specific to PowerFlex 525 drives only.

No.	Parameter	Min/Max	Display/Options	Default
P047, P049, P051	[Speed Reference1]	1/16	1 = "Drive Pot" 2 = "Keypad Freq" 3 = "Serial/DSI" 4 = "Network Opt" 5 = "0-10V Input" 6 = "4-20mA Input" 7 = "Preset Freq" 8 = "Anlg In Mult"(1) 9 = "MOP" 10 = "Pulse Input" 11 = "PID1 Output" 12 = "PID2 Output"(1) 13 = "Step Logic"(1) 14 = "Encoder"(1) 15 = "Ethernet/IP"(1) 16 = "Positioning"(1)	P047 = 1 P049 = 5 P051 = 3 (PowerFlex 523) 15 (PowerFlex 525)
	Sets the default speed command of the drive unless overridden by P049 [Speed Reference2] or P051 [Speed Reference3]. (1) Setting is specific to PowerFlex 525 drives only.			
P052	[Average kWh Cost]	0.00/655.35	0.01	0.00
	Sets the average cost per kWh.			
P053	[Reset To Defalts]	0/4	0 = "Ready/Idle" 1 = "Param Reset" 2 = "Factory Rset" 3 = "Power Reset" 4 = "Module Reset"(1)(2)(3)	0
	Resets parameters to their factory defaults values. After a Reset command, the value of this parameter returns to zero. (1) Power cycle of the drive, **NO** parameters are reset. (2) Setting is available in PowerFlex 525 FRN 5.xxx and later. (3) Setting is available in PowerFlex 523 FRN 3.xxx and later.			

LCD Display with QuickView Technology

QuickView™ technology enables text to scroll across the LCD display of the PowerFlex 520-series drive. This allows you to easily configure parameters, troubleshoot faults and view diagnostic items without using a separate device.

Use parameter A556 [Text Scroll] to set the speed at which the text scrolls across the display. Select 0 "Off" to turn off text scrolling. See Language Support on page 64 for the languages supported by the PowerFlex 520-series drive.

Using the USB Port

The PowerFlex 520-series drive has a USB port that connects to a PC for the purpose of upgrading drive firmware or uploading/downloading a parameter configuration.

IMPORTANT To use the USB feature of the PowerFlex 520-series drive, Microsoft .Net Framework 2.0 and Windows XP or later is required.

MainsFree Programming

The MainsFree™ programming feature allows you to quickly configure your PowerFlex 520-series drive without having to power up the control module or install additional software. Simply connect the control module to your PC with a USB Type B cable and you can download a parameter configuration to your drive. You can also easily upgrade your drive with the latest firmware.

Connecting a PowerFlex 520-series drive to a PC

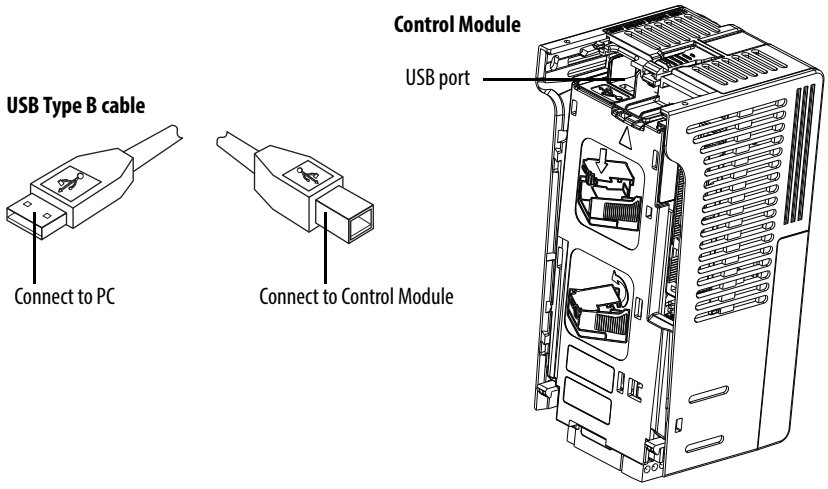

When connected, the drive appears on the PC and contains two files:

- GUIDE.PDF
  This file contains links to relevant product documentation and software downloads.
- PF52XUSB.EXE
  This file is an application to flash upgrade firmware or upload/download a parameter configuration.

  It is not possible to delete these files or add more to the drive.

Double-click on the PF52XUSB.EXE file to launch the USB utility application. The main menu is displayed. Follow the program instructions to upgrade the firmware or upload/download configuration data.

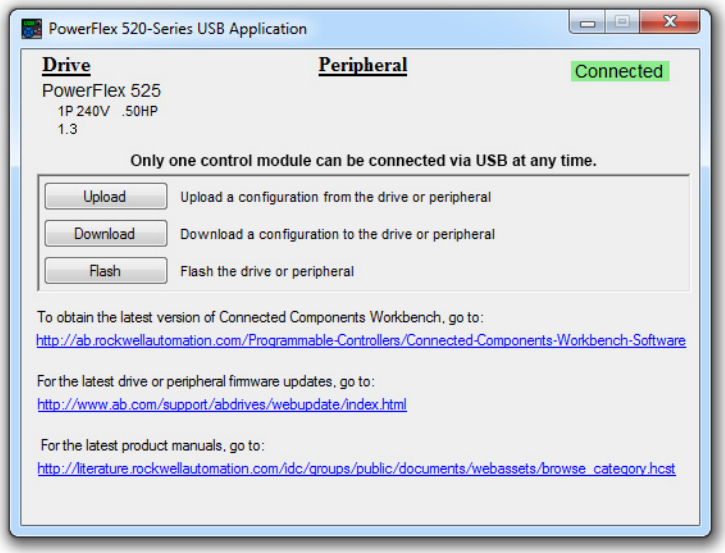

IMPORTANT Make sure your PC is powered by an AC power outlet or has a fully charged battery before starting any operation. This prevents the operation from terminating before completion due to insufficient power.

Limitation in Downloading .pf5 Configuration Files with the USB Utility Application

Before downloading a .pf5 configuration file using the USB utility application, parameter C169 [MultiDrv Sel] in the destination drive must match the incoming configuration file. If it does not, set the parameter manually to match and then cycle drive power. Also, the drive type of the .pf5 file must match the drive.

This means you cannot apply a multi-drive configuration using the USB utility application to a drive in single mode (parameter C169 [MultiDrv Sel] set to 0 “Disabled”), or apply a single mode configuration to a drive in multi-drive mode.

Notes:

Programming and Parameters

This chapter provides a complete listing and description of the PowerFlex 520-series drive parameters. Parameters are programmed (viewed/edited) using either the drive's built-in keypad, RSLogix 5000 version 17.0 or greater, Logix Designer version 21.0 or greater, o r Connected Components Workbench version 5.0 or greater software. The Connected Components Workbench software can be used offline (through USB) to upload parameter configurations to the drive or online (through Ethernet connection).

Limited functionality is also available when using the Connected Components Workbench software online (through DSI and serial converter module), a legacy external HIM, or legacy software online (DriveTools SP™). When using these methods, the parameter list can only be displayed linearly, and there is no access to communications option card programming.

For information on...	See page...
About Parameters	71
Parameter Groups	73
Basic Display Group	78
Basic Program Group	83
Terminal Block Group	89
Communications Group	101
Logic Group	107
Advanced Display Group	110
Advanced Program Group	115
Network Parameter Group	141
Modified Parameter Group	142
Fault and Diagnostic Group	142
AppView Parameter Groups	150
CustomView Parameter Group	151
Parameter Cross Reference by Name	152

About Parameters

To configure a drive to operate in a specific way, drive parameters may have to be set. Three types of parameters exist:

- **ENUM**
  ENUM parameters allow a selection from 2 or more items. Each item is represented by a number.
- **Numeric Parameters**
  These parameters have a single numerical value (0.1V).

- **Bit Parameters**
  Bit parameters have five individual digits associated with features or conditions. If the digit is 0, the feature is off or the condition is false. If the digit is 1, the feature is on or the condition is true.

Some parameters are marked as follows.

= Stop drive before changing this parameter.

= 32 bit parameter.

= Parameter is specific to PowerFlex 525 drives only.

32-bit Parameters

Parameters marked 32-bit will have two parameter numbers when using RS485 communications and programming software. For example, parameters b010 [Process Display] and b011 [Process Fract] are scaled and displayed as follows.

- P043 [Minimum Freq] = 0 Hz
- P044 [Maximum Freq] = 60 Hz
- A481 [Process Display Lo] = 0
- A482 [Process Display Hi] = 10

Using the forumla,

$$\text{Scaled Process Value (PV)} = \frac{([\text{Process Disp Hi}] - [\text{Process Disp Lo}]) \times ([\text{Output Freq}] - [\text{Minimum Freqp}])}{[\text{Maximum Freq}] - [\text{Minimum Freq}]}$$

when the drive is running at 10 Hz, the Process Value will be 1.66.

On the drive LCD display, only parameter b010 [Process Display] is shown.

In Connected Components Workbench software, parameter b010 [Process Display] and b011 [Process Fract] are shown separately.

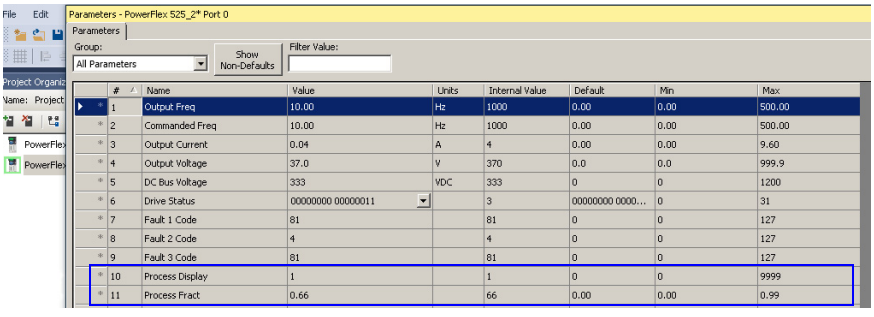

Parameter Groups

For an alphabetical listing of parameters, see Parameter Cross Reference by Name on page 152.

Basic Display		Output Voltage	b004	Control Source	b012	Elapsed Run Time	b019	Accum CO2 Sav	b026
		DC Bus Voltage	b005	Contrl In Status	b013	Average Power	b020	Drive Temp	b027
		Drive Status	b006	Dig In Status	b014	Elapsed kWh	b021	Control Temp	b028
		Fault 1 Code	b007	Output RPM	b015	Elapsed MWh	b022	Control SW Ver	b029
Output Freq	b001	Fault 2 Code	b008	Output Speed	b016	Energy Saved	b023		
Commanded Freq	b002	Fault 3 Code	b009	Output Power	b017	Accum kWh Sav	b024		
Output Current	b003	Process Display	b010	Power Saved	b018	Accum Cost Sav	b025		
Basic Program		Motor NP Hertz	P032	Voltage Class	P038	Maximum Freq	P044	Start Source 3	P050
		Motor OL Current	P033	Torque Perf Mode	P039	Stop Mode	P045	Speed Reference3	P051
		Motor NP FLA	P034	Autotune	P040	Start Source 1	P046	Average kWh Cost	P052
		Motor NP Poles	P035	Accel Time 1	P041	Speed Reference1	P047	Reset To Defalts	P053
Language	P030	Motor NP RPM	P036	Decel Time 1	P042	Start Source 2	P048		
Motor NP Volts	P031	Motor NP Power[1]	P037	Minimum Freq	P043	Speed Reference2	P049		
Terminal Blocks		DigIn TermBlk 07[1]	t067	Relay 1 On Time	t079	Analog Out High[2]	t089	Anlg Loss Delay	t098
		DigIn TermBlk 08[1]	t068	Relay 1 Off Time	t080	Anlg Out Setpt[2]	t090	Analog In Filter	t099
		Opto Out1 Sel[1]	t069	Relay Out2 Sel[1]	t081	Anlg In 0-10V Lo	t091	Sleep-Wake Sel	t100
		Opto Out1 Level[1]	t070	Relay Out2 Level[1]	t082	Anlg In 0-10V Hi	t092	Sleep Level	t101
DigIn TermBlk 02	t062	Opto Out2 Sel[1]	t072	Relay 2 On Time[1]	t084	10V Bipolar Enbl[1]	t093	Sleep Time	t102
DigIn TermBlk 03	t063	Opto Out2 Level[1]	t073	Relay 2 Off Time[1]	t085	Anlg In V Loss	t094	Wake Level	t103
2-Wire Mode	t064	Opto Out Logic[1]	t075	EM Brk Off Delay	t086	Anlg In4-20mA Lo	t095	Wake Time	t104
DigIn TermBlk 05	t065	Relay Out1 Sel	t076	EM Brk On Delay	t087	Anlg In4-20mA Hi	t096	Safety Open En[1]	t105
DigIn TermBlk 06	t066	Relay Out1 Level	t077	Analog Out Sel[2]	t088	Anlg In mA Loss	t097	SafetyFlt RstCfg[1][3]	t106
Communications		EN Addr Sel[1]	C128	EN Gateway Cfg 3[1]	C139	EN Data In 1[1]	C153	Opt Data In 4	C164
		EN IP Addr Cfg 1[1]	C129	EN Gateway Cfg 4[1]	C140	EN Data In 2[1]	C154	Opt Data Out 1	C165
		EN IP Addr Cfg 2[1]	C130	EN Rate Cfg[1]	C141	EN Data In 3[1]	C155	Opt Data Out 2	C166
		EN IP Addr Cfg 3[1]	C131	EN Comm Flt Actn[1]	C143	EN Data In 4[1]	C156	Opt Data Out 3	C167
Comm Write Mode	C121	EN IP Addr Cfg 4[1]	C132	EN Idle Flt Actn[1]	C144	EN Data Out 1[1]	C157	Opt Data Out 4	C168
Cmd Stat Select[1]	C122	EN Subnet Cfg 1[1]	C133	EN Flt Cfg Logic[1]	C145	EN Data Out 2[1]	C158	MultiDrv Sel	C169
RS485 Data Rate	C123	EN Subnet Cfg 2[1]	C134	EN Flt Cfg Ref[1]	C146	EN Data Out 3[1]	C159	Drv 1 Addr	C171
RS485 Node Addr	C124	EN Subnet Cfg 3[1]	C135	EN Flt Cfg DL 1[1]	C147	EN Data Out 4[1]	C160	Drv 2 Addr	C172
Comm Loss Action	C125	EN Subnet Cfg 4[1]	C136	EN Flt Cfg DL 2[1]	C148	Opt Data In 1	C161	Drv 3 Addr	C173
Comm Loss Time	C126	EN Gateway Cfg 1[1]	C137	EN Flt Cfg DL 3[1]	C149	Opt Data In 2	C162	Drv 4 Addr	C174
RS485 Format	C127	EN Gateway Cfg 2[1]	C138	EN Flt Cfg DL 4[1]	C150	Opt Data In 3	C163	DSI I/O Cfg	C175
Logic[1]		Stp Logic 2	L182	Stp Logic Time 0	L190	Stp Logic Time 6	L196	Step Units 4	L208
		Stp Logic 3	L183	Stp Logic Time 1	L191	Stp Logic Time 7	L197	Step Units 5	L210
		Stp Logic 4	L184	Stp Logic Time 2	L192	Step Units 0	L200	Step Units 6	L212
		Stp Logic 5	L185	Stp Logic Time 3	L193	Step Units 1	L202	Step Units 7	L214
Stp Logic 0	L180	Stp Logic 6	L186	Stp Logic Time 4	L194	Step Units 2	L204		
Stp Logic 1	L181	Stp Logic 7	L187	Stp Logic Time 5	L195	Step Units 3	L206		
Advanced Display		Elapsed Time-min	d363	Speed Feedback	d376	PID2 Fdbk Displ[1]	d385	RdyBit Mode Act[2][4]	d392
		Counter Status	d364	Encoder Speed[2]	d378	PID2 Setpnt Disp[1]	d386	Drive Status 2[2][3]	d393
		Timer Status	d365	DC Bus Ripple	d380	Position Status[1]	d387	Dig Out Status[2][3]	d394
		Drive Type	d367	Output Powr Fctr	d381	Units Traveled H[1]	d388		
Analog In 0-10V	d360	Testpoint Data	d368	Torque Current	d382	Units Traveled L[1]	d389		
Analog In 4-20mA	d361	Motor OL Level	d369	PID1 Fdbk Displ	d383	Fiber Status	d390		
Elapsed Time-hr	d362	Slip Hz Meter	d375	PID1 Setpnt Disp	d384	Stp Logic Status[1]	d391		

Advanced Program		Accel Time 2	A442	PID 2 Preload[1]	A478	PM HIFI NS Cur[1][3]	A519	Reset Meters	A555
		Decel Time 2	A443	PID 2 Invert Err[1]	A479	PM Bus Reg Kd[1][3]	A520	Text Scroll	A556
		Accel Time 3	A444	Process Disp Lo	A481	Freq 1 Kp[1]	A521	Out Phas Loss En	A557
		Decel Time 3	A445	Process Disp Hi	A482	Freq 1 Ki[1]	A522	Positioning Mode[1]	A558
Preset Freq 0	A410	Accel Time 4	A446	Testpoint Sel	A483	Freq 2 Kp[1]	A523	Counts Per Unit[1]	A559
Preset Freq 1	A411	Decel Time 4	A447	Current Limit 1	A484	Freq 2 Ki[1]	A524	Enh Control Word[1]	A560
Preset Freq 2	A412	Skip Frequency 1	A448	Current Limit 2[1]	A485	Freq 3 Kp[1]	A525	Home Save[1]	A561
Preset Freq 3	A413	Skip Freq Band 1	A449	Shear Pin1 Level	A486	Freq 3 Ki[1]	A526	Find Home Freq[1]	A562
Preset Freq 4	A414	Skip Frequency 2	A450	Shear Pin 1 Time	A487	PM FWKn 1 Kp[1][3]	A527	Find Home Dir[1]	A563
Preset Freq 5	A415	Skip Freq Band 2	A451	Shear Pin2 Level[1]	A488	PM FWKn 2 Kp[1][3]	A528	Encoder Pos Tol[1]	A564
Preset Freq 6	A416	Skip Frequency 3[1]	A452	Shear Pin 2 Time[1]	A489	PM Control Cfg[1][3]	A529	Pos Reg Filter[1]	A565
Preset Freq 7	A417	Skip Freq Band 3[1]	A453	Load Loss Level[1]	A490	Boost Select	A530	Pos Reg Gain[1]	A566
Preset Freq 8[1]	A418	Skip Frequency 4[1]	A454	Load Loss Time[1]	A491	Start Boost	A531	Max Traverse	A567
Preset Freq 9[1]	A419	Skip Freq Band 4[1]	A455	Stall Fault Time	A492	Break Voltage	A532	Traverse Inc	A568
Preset Freq 10[1]	A420	PID 1 Trim Hi	A456	Motor OL Select	A493	Break Frequency	A533	Traverse Dec	A569
Preset Freq 11[1]	A421	PID 1 Trim Lo	A457	Motor OL Ret	A494	Maximum Voltage	A534	P Jump	A570
Preset Freq 12[1]	A422	PID 1 Trim Sel	A458	Drive OL Mode	A495	Motor Fdbk Type[2]	A535	Sync Time	A571
Preset Freq 13[1]	A423	PID 1 Ref Sel	A459	IR Voltage Drop	A496	Encoder PPR[1]	A536	Speed Ratio	A572
Preset Freq 14[1]	A424	PID 1 Fdback Sel	A460	Flux Current Ref	A497	Pulse In Scale	A537	Mtr Options Cfg[2][5]	A573
Preset Freq 15[1]	A425	PID 1 Prop Gain	A461	Motor Rr[1]	A498	Ki Speed Loop[2]	A538	RdyBit Mode Cfg[2][4]	A574
Keypad Freq	A426	PID 1 Integ Time	A462	Motor Lm[1]	A499	Kp Speed Loop[2]	A539	Flux Braking En[2][3]	A575
MOP Freq	A427	PID 1 Diff Rate	A463	Motor Lx[1]	A500	Var PWM Disable	A540	Phase Loss Level[2][3]	A576
MOP Reset Sel	A428	PID 1 Setpoint	A464	PM IR Voltage[1][3]	A501	Auto Rstrt Tries	A541	Current Loop BW[1][3]	A580
MOP Preload	A429	PID 1 Deadband	A465	PM IXd Voltage[1][3]	A502	Auto Rstrt Delay	A542	PM Stable 1 Freq[1][3]	A581
MOP Time	A430	PID 1 Preload	A466	PM IXq Voltage[1][3]	A503	Start At PowerUp	A543	PM Stable 2 Freq[1][3]	A582
Jog Frequency	A431	PID 1 Invert Err	A467	PM BEMF Voltage[1][3]	A504	Reverse Disable	A544	PM Stable 1 Kp[1][3]	A583
Jog Accel/Decel	A432	PID 2 Trim Hi[1]	A468	Speed Reg Sel[1]	A509	Flying Start En	A545	PM Stable 2 Kp[1][3]	A584
Purge Frequency	A433	PID 2 Trim Lo[1]	A469	Freq 1[1]	A510	FlyStrt CurLimit	A546	PM Stable Brk Pt[1][3]	A585
DC Brake Time	A434	PID 2 Trim Sel[1]	A470	Freq 1 BW[1]	A511	Compensation	A547	PM Stepload Kp[1][3]	A586
DC Brake Level	A435	PID 2 Ref Sel[1]	A471	Freq 2[1]	A512	Power Loss Mode	A548	PM 1 Efficiency[1][3]	A587
DC Brk Time@Strt	A436	PID 2 Fdback Sel[1]	A472	Freq 2 BW[1]	A513	Half Bus Enable	A549	PM 2 Efficiency[1][3]	A588
DB Resistor Sel	A437	PID 2 Prop Gain[1]	A473	Freq 3[1]	A514	Bus Reg Enable	A550	PM Algor Sel[1][3]	A589
DB Threshold	A438	PID 2 Integ Time[1]	A474	Freq 3 BW[1]	A515	Fault Clear	A551		
S Curve %	A439	PID 2 Diff Rate[1]	A475	PM Initial Sel[1][3]	A516	Program Lock	A552		
PWM Frequency	A440	PID 2 Setpoint[1]	A476	PM DC Inject Cur[1][3]	A517	Program Lock Mod	A553		
Droop Hertz@ FLA[1]	A441	PID 2 Deadband[1]	A477	PM Align Time[1][3]	A518	Drv Ambient Sel	A554		

Network	This group contains parameters for the network option card that is installed. See the network option card's user manual for more information on the available parameters.
Modified	This group contains parameters that have their values changed from the factory default. When a parameter has its default value changed, it is automatically added to this group. When a parameter has its value changed back to the factory default, it is automatically removed from this group.

Fault and Diagnostic	
Fault 4 Code	F604
Fault 5 Code	F605
Fault 6 Code	F606
Fault 7 Code	F607
Fault 8 Code	F608
Fault 9 Code	F609
Fault10 Code	F610
Fault 1 Time-hr	F611
Fault 2 Time-hr	F612
Fault 3 Time-hr	F613
Fault 4 Time-hr	F614
Fault 5 Time-hr	F615
Fault 6 Time-hr(1)	F616
Fault 7 Time-hr(1)	F617
Fault 8 Time-hr(1)	F618
Fault 9 Time-hr(1)	F619
Fault10 Time-hr(1)	F620
Fault 1 Time-min	F621
Fault 2 Time-min	F622
Fault 3 Time-min	F623
Fault 4 Time-min	F624
Fault 5 Time-min	F625
Fault 6 Time-min(1)	F626
Fault 7 Time-min(1)	F627
Fault 8 Time-min(1)	F628
Fault 9 Time-min(1)	F629
Fault10 Time-min(1)	F630
Fault 1 Freq	F631
Fault 2 Freq	F632
Fault 3 Freq	F633
Fault 4 Freq	F634
Fault 5 Freq	F635
Fault 6 Freq(1)	F636
Fault 7 Freq(1)	F637
Fault 8 Freq(1)	F638
Fault 9 Freq(1)	F639
Fault10 Freq(1)	F640
Fault 1 Current	F641
Fault 2 Current	F642
Fault 3 Current	F643
Fault 4 Current	F644
Fault 5 Current	F645
Fault 6 Current(1)	F646
Fault 7 Current(1)	F647
Fault 8 Current(1)	F648
Fault 9 Current(1)	F649
Fault10 Current(1)	F650
Fault 1 BusVolts	F651
Fault 2 BusVolts	F652
Fault 3 BusVolts	F653
Fault 4 BusVolts	F654
Fault 5 BusVolts	F655
Fault 6 BusVolts(1)	F656
Fault 7 BusVolts(1)	F657
Fault 8 BusVolts(1)	F658
Fault 9 BusVolts(1)	F659
Fault10 BusVolts(1)	F660
Status @ Fault 1	F661
Status @ Fault 2	F662
Status @ Fault 3	F663
Status @ Fault 4	F664
Status @ Fault 5	F665
Status @ Fault 6(1)	F666
Status @ Fault 7(1)	F667
Status @ Fault 8(1)	F668
Status @ Fault 9(1)	F669
Status @ Fault10(1)	F670
Comm Sts - DSI	F681
Comm Sts - Opt	F682
Com Sts-Emb Enet(1)	F683
EN Addr Src(1)	F684
EN Rate Act(1)	F685
DSI I/O Act	F686
HW Addr 1(1)	F687
HW Addr 2(1)	F688
HW Addr 3(1)	F689
HW Addr 4(1)	F690
HW Addr 5(1)	F691
HW Addr 6(1)	F692
EN IP Addr Act 1(1)	F693
EN IP Addr Act 2(1)	F694
EN IP Addr Act 3(1)	F695
EN IP Addr Act 4(1)	F696
EN Subnet Act 1(1)	F697
EN Subnet Act 2(1)	F698
EN Subnet Act 3(1)	F699
EN Subnet Act 4(1)	F700
EN Gateway Act 1(1)	F701
EN Gateway Act 2(1)	F702
EN Gateway Act 3(1)	F703
EN Gateway Act 4(1)	F704
Drv 0 Logic Cmd	F705
Drv 0 Reference	F706
Drv 0 Logic Sts	F707
Drv 0 Feedback	F708
Drv 1 Logic Cmd	F709
Drv 1 Reference	F710
Drv 1 Logic Sts	F711
Drv 1 Feedback	F712
Drv 2 Logic Cmd	F713
Drv 2 Reference	F714
Drv 2 Logic Sts	F715
Drv 2 Feedback	F716
Drv 3 Logic Cmd	F717
Drv 3 Reference	F718
Drv 3 Logic Sts	F719
Drv 3 Feedback	F720
Drv 4 Logic Cmd	F721
Drv 4 Reference	F722
Drv 4 Logic Sts	F723
Drv 4 Feedback	F724
EN Rx Overruns(1)	F725
EN Rx Packets(1)	F726
EN Rx Errors(1)	F727
EN Tx Packets(1)	F728
EN Tx Errors(1)	F729
EN Missed IO Pkt(1)	F730
DSI Errors	F731

(1) Parameter is specific to PowerFlex 525 drives only.
(2) Parameter is also available in PowerFlex 523 FRN 3.xxx and later.
(3) Parameter is available in PowerFlex 525 FRN 5.xxx and later.
(4) Parameter is available in PowerFlex 525 FRN 3.xxx and later.
(5) Parameter is available in PowerFlex 525 FRN 2.xxx and later.

AppView Parameter Groups

PowerFlex 520-series drives include various AppView™ parameter groups that groups certain parameters together for quick and easy access based on different types of applications. See AppView Parameter Groups on page 150 for more information.

Conveyor		Motor NP Volts	P031	Decel Time 1	P042	DigIn TermBlk 03	t063	Anlg In mA Loss	t097
		Motor NP Hertz	P032	Minimum Freq	P043	Opto Out1 Sel	t069	Slip Hz Meter	d375
		Motor OL Current	P033	Maximum Freq	P044	Relay Out1 Sel	t076	Preset Freq 0	A410
		Motor NP FLA	P034	Stop Mode	P045	Anlg In 0-10V Lo	t091	Jog Frequency	A431
Language	P030	Motor NP Poles	P035	Start Source 1	P046	Anlg In 0-10V Hi	t092	Jog Accel/Decel	A432
Output Freq	b001	Autotune	P040	Speed Reference1	P047	Anlg In4-20mA Lo	t095	S Curve %	A439
Commanded Freq	b002	Accel Time 1	P041	DigIn TermBlk 02	t062	Anlg In4-20mA Hi	t096	Reverse Disable	A544
Mixer		Commanded Freq	b002	Motor NP Poles	P035	Stop Mode	P045	Anlg In4-20mA Lo	t095
		Output Current	b003	Autotune	P040	Start Source 1	P046	Anlg In4-20mA Hi	t096
		Motor NP Volts	P031	Accel Time 1	P041	Speed Reference1	P047	Anlg In mA Loss	t097
		Motor NP Hertz	P032	Decel Time 1	P042	Relay Out1 Sel	t076	Preset Freq 0	A410
Language	P030	Motor OL Current	P033	Minimum Freq	P043	Anlg In 0-10V Lo	t091	Stall Fault Time	A492
Output Freq	b001	Motor NP FLA	P034	Maximum Freq	P044	Anlg In 0-10V Hi	t092		
Compressor		Motor NP Hertz	P032	Maximum Freq	P044	Anlg In 0-10V Lo	t091	Start At PowerUp	A543
		Motor OL Current	P033	Stop Mode	P045	Anlg In 0-10V Hi	t092	Reverse Disable	A544
		Motor NP FLA	P034	Start Source 1	P046	Anlg In4-20mA Lo	t095	Power Loss Mode	A548
		Motor NP Poles	P035	Speed Reference1	P047	Anlg In4-20mA Hi	t096	Half Bus Enable	A549
Language	P030	Autotune	P040	Relay Out1 Sel	t076	Anlg In mA Loss	t097		
Output Freq	b001	Accel Time 1	P041	Analog Out Sel	t088	Preset Freq 0	A410		
Commanded Freq	b002	Decel Time 1	P042	Analog Out High	t089	Auto Rstrt Tries	A541		
Motor NP Volts	P031	Minimum Freq	P043	Anlg Out Setpt	t090	Auto Rstrt Delay	A542		
Centrifugal Pump		Motor OL Current	P033	Start Source 1	P046	Anlg In4-20mA Hi	t096	PID 1 Diff Rate	A463
		Motor NP FLA	P034	Speed Reference1	P047	Anlg In mA Loss	t097	PID 1 Setpoint	A464
		Motor NP Poles	P035	Relay Out1 Sel	t076	Preset Freq 0	A410	PID 1 Deadband	A465
		Autotune	P040	Analog Out Sel	t088	PID 1 Trim Hi	A456	PID 1 Preload	A466
Language	P030	Accel Time 1	P041	Analog Out High	t089	PID 1 Trim Lo	A457	Auto Rstrt Tries	A541
Output Freq	b001	Decel Time 1	P042	Anlg Out Setpt	t090	PID 1 Ref Sel	A459	Auto Rstrt Delay	A542
Commanded Freq	b002	Minimum Freq	P043	Anlg In 0-10V Lo	t091	PID 1 Fdback Sel	A460	Start At PowerUp	A543
Motor NP Volts	P031	Maximum Freq	P044	Anlg In 0-10V Hi	t092	PID 1 Prop Gain	A461	Reverse Disable	A544
Motor NP Hertz	P032	Stop Mode	P045	Anlg In4-20mA Lo	t095	PID 1 Integ Time	A462		
Blower/Fan		Motor OL Current	P033	Start Source 1	P046	Anlg In4-20mA Hi	t096	PID 1 Diff Rate	A463
		Motor NP FLA	P034	Speed Reference1	P047	Anlg In mA Loss	t097	PID 1 Setpoint	A464
		Motor NP Poles	P035	Relay Out1 Sel	t076	Preset Freq 0	A410	PID 1 Deadband	A465
		Autotune	P040	Analog Out Sel	t088	PID 1 Trim Hi	A456	PID 1 Preload	A466
Language	P030	Accel Time 1	P041	Analog Out High	t089	PID 1 Trim Lo	A457	Auto Rstrt Tries	A541
Output Freq	b001	Decel Time 1	P042	Anlg Out Setpt	t090	PID 1 Ref Sel	A459	Auto Rstrt Delay	A542
Commanded Freq	b002	Minimum Freq	P043	Anlg In 0-10V Lo	t091	PID 1 Fdback Sel	A460	Start At PowerUp	A543
Motor NP Volts	P031	Maximum Freq	P044	Anlg In 0-10V Hi	t092	PID 1 Prop Gain	A461	Reverse Disable	A544
Motor NP Hertz	P032	Stop Mode	P045	Anlg In4-20mA Lo	t095	PID 1 Integ Time	A462	Flying Start En	A545

Extruder		Motor NP Hertz	P032	Stop Mode	P045	Anlg In4-20mA Lo	t095	Encoder PPR	A536
		Motor OL Current	P033	Start Source 1	P046	Anlg In4-20mA Hi	t096	Pulse In Scale	A537
		Motor NP FLA	P034	Speed Reference1	P047	Anlg In mA Loss	t097	Ki Speed Loop	A538
		Motor NP Poles	P035	Relay Out1 Sel	t076	Slip Hz Meter	d375	Kp Speed Loop	A539
Language	P030	Autotune	P040	Analog Out Sel	t088	Speed Feedback	d376	Power Loss Mode	A548
Output Freq	b001	Accel Time 1	P041	Analog Out High	t089	Encoder Speed	d378	Half Bus Enable	A549
Commanded Freq	b002	Decel Time 1	P042	Anlg Out Setpt	t090	Preset Freq 0	A410		
Output Current	b003	Minimum Freq	P043	Anlg In 0-10V Lo	t091	Stall Fault Time	A492		
Motor NP Volts	P031	Maximum Freq	P044	Anlg In 0-10V Hi	t092	Motor Fdbk Type	A535		
Positioning(1)		Stop Mode	P045	Stp Logic 5	L185	Step Units 6	L212	Jog Accel/Decel	A432
		Start Source 1	P046	Stp Logic 6	L186	Step Units 7	L214	DB Threshold	A438
		Speed Reference1	P047	Stp Logic 7	L187	Slip Hz Meter	d375	S Curve %	A439
		DigIn TermBlk 02	t062	Stp Logic Time 0	L190	Speed Feedback	d376	Motor Fdbk Type	A535
Language	P030	DigIn TermBlk 03	t063	Stp Logic Time 1	L191	Encoder Speed	d378	Encoder PPR	A536
Output Freq	b001	DigIn TermBlk 05	t065	Stp Logic Time 2	L192	Units Traveled H	d388	Pulse In Scale	A537
Commanded Freq	b002	DigIn TermBlk 06	t066	Stp Logic Time 3	L193	Units Traveled L	d389	Ki Speed Loop	A538
Motor NP Volts	P031	Opto Out1 Sel	t069	Stp Logic Time 4	L194	Preset Freq 0	A410	Kp Speed Loop	A539
Motor NP Hertz	P032	Opto Out2 Sel	t072	Stp Logic Time 5	L195	Preset Freq 1	A411	Bus Reg Enable	A550
Motor OL Current	P033	Relay Out1 Sel	t076	Stp Logic Time 6	L196	Preset Freq 2	A412	Positioning Mode	A558
Motor NP FLA	P034	EM Brk Off Delay	t086	Stp Logic Time 7	L197	Preset Freq 3	A413	Counts Per Unit	A559
Motor NP Poles	P035	EM Brk On Delay	t087	Step Units 0	L200	Preset Freq 4	A414	Enh Control Word	A560
Autotune	P040	Stp Logic 0	L180	Step Units 1	L202	Preset Freq 5	A415	Find Home Freq	A562
Accel Time 1	P041	Stp Logic 1	L181	Step Units 2	L204	Preset Freq 6	A416	Find Home Dir	A563
Decel Time 1	P042	Stp Logic 2	L182	Step Units 3	L206	Preset Freq 7	A417	Encoder Pos Tol	A564
Minimum Freq	P043	Stp Logic 3	L183	Step Units 4	L208	Preset Freq 8	A418	Pos Reg Filter	A565
Maximum Freq	P044	Stp Logic 4	L184	Step Units 5	L210	Jog Frequency	A431	Pos Reg Gain	A566
Textile/Fiber		Motor NP FLA	P034	DigIn TermBlk 02	t062	Slip Hz Meter	d375	Max Traverse	A567
		Motor NP Poles	P035	DigIn TermBlk 03	t063	Fiber Status	d390	Traverse Inc	A568
		Autotune	P040	Opto Out1 Sel	t069	Preset Freq 0	A410	Traverse Dec	A569
		Accel Time 1	P041	Opto Out2 Sel	t072	Jog Frequency	A431	P Jump	A570
Language	P030	Decel Time 1	P042	Relay Out1 Sel	t076	Jog Accel/Decel	A432	Sync Time	A571
Output Freq	b001	Minimum Freq	P043	Anlg In 0-10V Lo	t091	S Curve %	A439	Speed Ratio	A572
Commanded Freq	b002	Maximum Freq	P044	Anlg In 0-10V Hi	t092	Reverse Disable	A544		
Motor NP Volts	P031	Stop Mode	P045	Anlg In4-20mA Lo	t095	Power Loss Mode	A548		
Motor NP Hertz	P032	Start Source 1	P046	Anlg In4-20mA Hi	t096	Half Bus Enable	A549		
Motor OL Current	P033	Speed Reference1	P047	Anlg In mA Loss	t097	Bus Reg Enable	A550		

(1) This AppView parameter group is specific to PowerFlex 525 drives only.

CustomView Parameter Group

PowerFlex 520-series drives include a CustomView™ parameter group for you to store frequently used parameters for your application. See CustomView Parameter Group on page 151 for more information.

Custom Group	
	This group can store up to 100 parameters.

Basic Display Group

b001 [Output Freq] Related Parameter(s): b002, b010, P043, P044, P048, P050, P052

Output frequency present at T1, T2 & T3 (U, V & W). Does not include slip frequency.

Values	Default:	Read Only
	Min/Max:	0.00/[Maximum Freq]
	Display:	0.01 Hz

b002 [Commanded Freq] Related Parameter(s): b001, b013, P043, P044, P048, P050, P052

Value of the active frequency command even if the drive is not running.

IMPORTANT The frequency command can come from a number of sources. See Start and Speed Reference Control on page 49 for more information.

Values	Default:	Read Only
	Min/Max:	0.00/[Maximum Freq]
	Display:	0.01 Hz

b003 [Output Current]

Output current present at T1, T2 & T3 (U, V & W).

Values	Default:	Read Only
	Min/Max:	0.00/(Drive Rated Amps x 2)
	Display:	0.01 A

b004 [Output Voltage] Related Parameter(s): P031, A530, A534

Output voltage present at T1, T2 & T3 (U, V & W).

Values	Default:	Read Only
	Min/Max:	0.0/Drive Rated Volts
	Display:	0.1V

b005 [DC Bus Voltage]

Filtered DC bus voltage level of the drive.

Values	Default:	Read Only
	Min/Max:	0/1200VDC
	Display:	1VDC

b006 [Drive Status] Related Parameter(s): A544

Present operating condition of the drive.

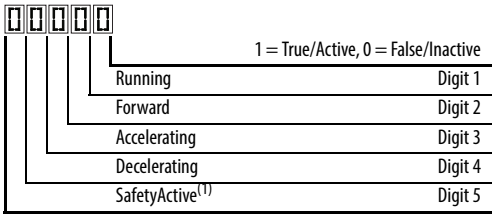

(1) Setting is specific to PowerFlex 525 drives only.

Values	Default:	Read Only
	Min/Max:	00000/11111
	Display:	00000

Basic Display Group *(continued)*

b007 [Fault 1 Code]
b008 [Fault 2 Code]
b009 [Fault 3 Code]

Related Parameter(s): F604-F610

A code that represents a drive fault. Codes appear in these parameters in the order they occur (b007 [Fault 1 Code] = the most recent fault). Repetitive faults are only recorded once. See Fault and Diagnostic Group for more information.

Values	Default:	Read Only
	Min/Max:	F0/F127
	Display:	F0

b010 [Process Display]

Related Parameter(s): b001, A481, A482

32 bit parameter.

Output frequency scaled by A481[Process Disp Lo] and A482 [Process Disp Hi].
Scaled Process Value (PV) = ((([Process Disp Hi] - [Process Disp Lo]) x ([Output Freq] - [Minimum Freq])) / ([Maximum Freq] - [Minimum Freq])

Values	Default:	Read Only
	Min/Max:	0.00/9999.00
	Display:	0.01

b012 [Control Source]

Related Parameter(s): P046, P047, P048, P049, P050, P051, t062, t063, t065-t068, L180-L187, A410-A425

Active source of the Start Command and Frequency Command. Normally defined by the settings of P046, P048, P050 [Start Source x] and P047, P049, P051 [Speed Referencex]. See Start and Speed Reference Control on page 49 for more information.

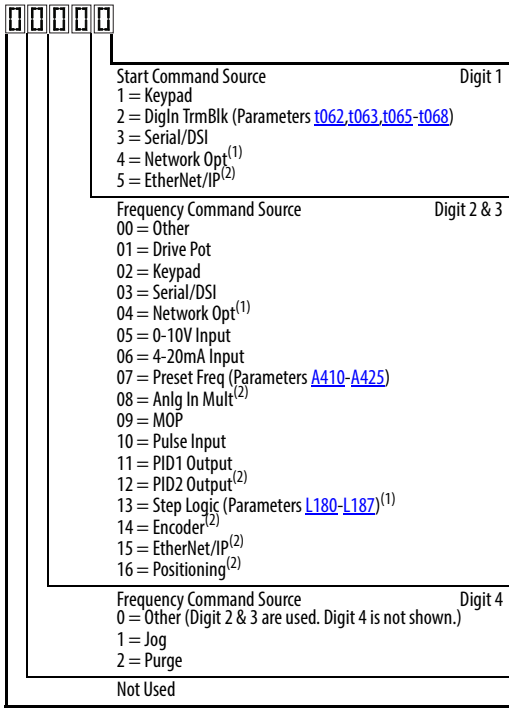

Example

Display reads...	Description
2004	Start source comes from Network Opt and Frequency source is Purge.
113	Start source comes from Serial/DSI and Frequency source comes from PID1 Output.
155	Start source and Frequency source comes from EtherNet/IP.
052	Start source comes from DigIn TrmBlk and Frequency source from 0-10V Input.
011	Start source comes from Keypad and Frequency source comes from Drive Pot.

(1) Select this setting if using the optional PowerFlex 25-COMM-E2P, 25-COMM-D, or 25-COMM-P adapters as the Start source and/or Frequency source.
(2) Setting is specific to PowerFlex 525 drives only.

Values	Default:	Read Only
	Min/Max:	0000/2165
	Display:	0000

Basic Display Group *(continued)*

b013 [Contrl In Status] Related Parameter(s): b002, P044, P045

State of the digital terminal blocks 1...3 and DB transistor.

IMPORTANT Actual control commands may come from a source other than the control terminal block.

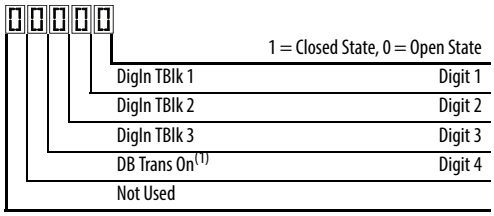

(1) The DB Transistor "on" indication must have a 0.5 s hysteresis. It will turn on and stay on for at least 0.5 s every time the DB transistor is turned on.

Values	Default:	Read Only
	Min/Max:	0000/1111
	Display:	0000

b014 [Dig In Status] Related Parameter(s): t065-t068

State of the programmable digital inputs.

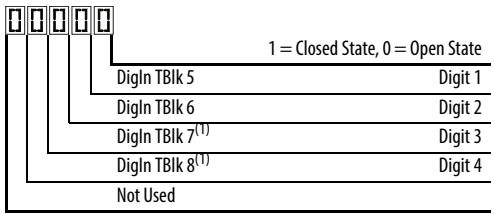

(1) Setting is specific to PowerFlex 525 drives only.

Values	Default:	Read Only
	Min/Max:	0000/1111
	Display:	0000

b015 [Output RPM] Related Parameter(s): P035

Current output frequency in rpm. Scale is based on P035 [Motor NP Poles].

Values	Default:	Read Only
	Min/Max:	0/24000 rpm
	Display:	1 rpm

b016 [Output Speed] Related Parameter(s): P044

Current output frequency in %. Scale is 0% at 0.00 Hz to 100% at P044 [Maximum Freq].

Values	Default:	Read Only
	Min/Max:	0.0/100.0%
	Display:	0.1%

b017 [Output Power] Related Parameter(s): b018

Output power present at T1, T2 & T3 (U, V & W).

Values	Default:	Read Only
	Min/Max:	0.00/(Drive Rated Power x 2)
	Display:	0.01 kW

Basic Display Group *(continued)*

b018 [Power Saved] Related Parameter(s): b017

Instantaneous power savings of using this drive compared to an across the line starter.

Values	Default:	Read Only
	Min/Max:	0.00/655.35 kW
	Display:	0.01 kW

b019 [Elapsed Run time] Related Parameter(s): A555

Accumulated time drive is outputting power. Time is displayed in 10 hour increments.

Values	Default:	Read Only
	Min/Max:	0/65535 x 10 hr
	Display:	1 = 10 hr

b020 [Average Power] Related Parameter(s): A555

Average power used by the motor since the last reset of the meters.

Values	Default:	Read Only
	Min/Max:	0.00/(Drive Rated Power x 2)
	Display:	0.01 kW

b021 [Elapsed kWh] Related Parameter(s): b022

Accumulated output energy of the drive. When the maximum value of this parameter is reached, it resets to zero and b022 [Elapsed MWh] is incremented.

Values	Default:	Read Only
	Min/Max:	0.0/100.0 kWh
	Display:	0.1 kWh

b022 [Elapsed MWh] Related Parameter(s): b021

Accumulated output energy of the drive.

Values	Default:	Read Only
	Min/Max:	0.0/6553.5 MWh
	Display:	0.1 MWh

b023 [Energy Saved] Related Parameter(s): A555

Total energy savings of using this drive compared to an across the line starter since the last reset of the meters.

Values	Default:	Read Only
	Min/Max:	0.0/6553.5 kWh
	Display:	0.1 kWh

b024 [Accum kWh Sav] Related Parameter(s): b025

Total approximate accumulated energy savings of the drive compared to using an across the line starter.

Values	Default:	Read Only
	Min/Max:	0.0/6553.5 kWh
	Display:	0.1 = 10 kWh

Basic Display Group *(continued)*

b025 [Accum Cost Sav] Related Parameter(s): b024, P052, A555

Total approximate accumulated cost savings of the drive compared to using an across the line starter.
[Accum Cost Sav] = [Average kWh cost] x [Accum kWh Sav]

Values	Default:	Read Only
	Min/Max:	0.0/6553.5
	Display:	0.1

b026 [Accum CO2 Sav] Related Parameter(s): A555

Total approximate accumulated CO2 savings of the drive compared to using an across the line starter.

Values	Default:	Read Only
	Min/Max:	0.0/6553.5 kg
	Display:	0.1 kg

b027 [Drive Temp]

Present operating temperature of the drive heatsink (inside module).

Values	Default:	Read Only
	Min/Max:	0/120 °C
	Display:	1 °C

b028 [Control Temp]

Present operating temperature of the drive control.

Values	Default:	Read Only
	Min/Max:	0/120 °C
	Display:	1 °C

b029 [Control SW Ver]

Current drive firmware version.

Values	Default:	Read Only
	Min/Max:	0.000/65.535
	Display:	0.001

Basic Program Group

P030 [Language]

Selects the language displayed. A reset or power cycle is required after selection is made.

			Language Support		
			Keypad/ LCD Display	RSLogix 5000/ Logix Designer	Connected Components Workbench
Options	1 English (Default)		Y	Y	Y
	2 Français		Y	Y	Y
	3 Español		Y	Y	Y
	4 Italiano		Y	Y	Y
	5 Deutsch		Y	Y	Y
	6 Japanese		–	Y	–
	7 Português		Y	Y	–
	8 Chinese	Chinese Simplified	–	Y	Y
	9 Reserved				
	10 Reserved				
	11 Korean		–	Y	–
	12 Polish(1)		Y	–	–
	13 Reserved				
	14 Turkish(1)		Y	–	–
	15 Czech(1)		Y	–	–

(1) Due to a limitation of the LCD Display, some of the characters for Polish, Turkish, and Czech will be modified.

P031 [Motor NP Volts] Related Parameter(s): b004, A530, A531, A532, A533

Stop drive before changing this parameter.

Sets the motor nameplate rated volts.

Values	Default:	Drive Rated Volts
	Min/Max:	10V (for 230V Drives), 20V (for 460V Drives), 25V (for 600V Drives)/Drive Rated Volts
	Display:	1V

P032 [Motor NP Hertz] Related Parameter(s): A493, A530, A531, A532, A533

Stop drive before changing this parameter.

Sets the motor nameplate rated frequency.

Values	Default:	60 Hz
	Min/Max:	15/500 Hz
	Display:	1 Hz

P033 [Motor OL Current] Related Parameter(s): t069, t072, t076, t081, A484, A485, A493

Sets the motor nameplate overload current. Used to determine motor overload conditions and can be set from 0.1 A to 200% of drive rated current.

IMPORTANT The drive will fault on an F007 "Motor Overload" if the value of this parameter is exceeded based on class 10 motor overload protection according to NEC article 430 and motor over-temperature protection according to NEC article 430.126 (A) (2). UL 508C File 29572

Values	Default:	Drive Rated Amps
	Min/Max:	0.0/(Drive Rated Amps x 2)
	Display:	0.1 A

Basic Program Group *(continued)*

P034 [Motor NP FLA] Related Parameter(s): P040

Sets the motor nameplate FLA. Used to assist the Autotune routine and motor control.

Values	Default:	Based on Drive Rating
	Min/Max:	0.1/(Drive Rated Amps x 2)
	Display:	0.1 A

P035 [Motor NP Poles] Related Parameter(s): b015

Sets the number of poles in the motor.

Values	Default:	4
	Min/Max:	2/40
	Display:	1

P036 [Motor NP RPM]

Stop drive before changing this parameter.

Sets the rated nameplate rpm of the motor. Used to calculate the rated slip of the motor. To reduce the slip frequency, set this parameter closer to the motor synchronous speed.

Values	Default:	1750 rpm
	Min/Max:	0/24000 rpm
	Display:	1 rpm

P037 [Motor NP Power]

PF 525 PowerFlex 525 only.

Sets the motor nameplate power. Used in PM regulator.

Values	Default:	Drive Rated Power
	Min/Max:	0.00/Drive Rated Power
	Display:	0.01 kW

P038 [Voltage Class]

Stop drive before changing this parameter.

Sets the voltage class of 600V drives. Only applicable to 600V drives.

Options	2	"480V"
	3	"600V" (Default)

P039 [Torque Perf Mode] Related Parameter(s): P040, A530, A531, A532, A533, A535

Stop drive before changing this parameter.

Selects the motor control mode.

The PowerFlex 523 and PowerFlex 525 drives are capable of performing with the following motor control modes.

Options	0	"V/Hz"	
	1	"SVC" (Default)	
	2	"Economize"	
	3	"Vector"(1)	
	4	"PM Control"(1) (2)	When P039 [Torque Perf Mode] is set to 4 and A535 [Motor Fdbk Type] is set to 0, 1, 2 or 3, the drive is in open loop PM motor control mode. When P039 [Torque Perf Mode] is set to 4 and A535 [Motor Fdbk Type] is set to 4 or 5, the drive is in closed loop PM motor control mode.

(1) Setting is specific to PowerFlex 525 drives only.

(2) Setting is available in PowerFlex 525 FRN 5.xxx and later.

Basic Program Group *(continued)*

P040 [Autotune] Related Parameter(s): P034, P039, A496, A497

Stop drive before changing this parameter.

Enables a static (not spinning) or dynamic (motor spinning) autotune to automatically set the motor parameters. Set the parameter value to a one or two, then issue a valid "Start" command to begin the routine. After the routine is complete the parameter resets to a zero. A failure (such as if a motor is not connected) results in an Autotune Fault.
It is recommended to perform a full rotate tune when using VVC mode.

IMPORTANT All motor parameters in the Basic Program group must be set before running the routine. If a start command is not given (or a stop command is given) within 30 s, the parameter automatically returns to a zero and an Autotune Fault occurs.

ATTENTION: Rotation of the motor in an undesired direction can occur during this procedure. To guard against possible injury and/or equipment damage, it is recommended that the motor be disconnected from the load before proceeding.

Options	0	"Ready/Idle" (Default)	
	1	"Static Tune"	A temporary command that initiates a non-rotational motor stator resistance test for the best possible automatic setting of A496 [IR Voltage Drop]. A start command is required following initiation of this setting. The parameter returns to 0 "Ready/Idle" following the test, at which time another start transition is required operate the drive in normal mode. Used when motor cannot be uncoupled from the load.
	2	"Rotate Tune"	A temporary command that initiates a "Static Tune" followed by a rotational test for the best possible automatic setting of A497 [Flux Current Ref]. A start command is required following initiation of this setting. The parameter returns to 0 "Ready/Idle" following the test, at which time another start transition is required to operate the drive in normal mode. Important: Used when motor is uncoupled from the load. Results may not be valid if a load is coupled to the motor during this procedure.

P041 [Accel Time 1] Related Parameter(s): P044, A439

Sets the time for the drive to accelerate from 0 Hz to P044 [Maximum Freq].
Accel Rate = [Maximum Freq] / [Accel Time x]

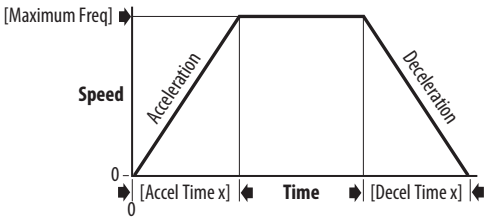

Values	Default:	10.00 s
	Min/Max:	0.00/600.00 s
	Display:	0.01 s

P042 [Decel Time 1] Related Parameter(s): P044, A439

Sets the time for the drive to decelerate from P044 [Maximum Freq] to 0 Hz.
Decel Rate = [Maximum Freq] / Decel Time x]

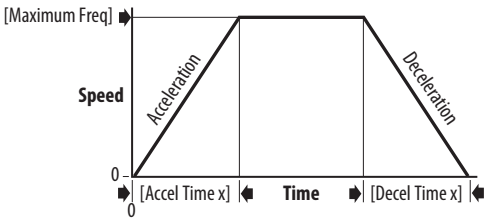

Values	Default:	10.00 s
	Min/Max:	0.00/600.00 s
	Display:	0.01 s

Basic Program Group *(continued)*

P043 [Minimum Freq] Related Parameter(s): b001, b002, b013, P044, A530, A531

Stop drive before changing this parameter.

Sets the lowest frequency the drive outputs.

Values	Default:	0.00 Hz
	Min/Max:	0.00/500.00 Hz
	Display:	0.01 Hz

P044 [Maximum Freq] Related Parameter(s): b001, b002, b013, b016, P043, A530, A531

Stop drive before changing this parameter.

Sets the highest frequency the drive outputs.

IMPORTANT This value must be greater than the value set in P043 [Minimum Freq].

Values	Default:	60.00 Hz
	Min/Max:	0.00/500.00 Hz
	Display:	0.01 Hz

P045 [Stop Mode] Related Parameter(s): t086, t087, A434, A435, A550

Determines the stopping mode used by the drive when a stop is initiated.

Options	0	"Ramp, CF" (Default)	Ramp to Stop. Stop command clears active fault.
	1	"Coast, CF"	Coast to Stop. Stop command clears active fault.
	2	"DC Brake, CF"	DC Injection Braking Stop. Stop command clears active fault.
	3	"DC BrkAuto,CF"	DC Injection Braking Stop with Auto Shutoff. • Standard DC Injection Braking for value set in A434 [DC Brake Time]. OR • Drive shuts off if the drive detects that the motor is stopped. Stop command clears active fault.
	4	"Ramp"	Ramp to Stop.
	5	"Coast"	Coast to Stop.
	6	"DC Brake"	DC Injection Braking Stop.
	7	"DC BrakeAuto"	DC Injection Braking Stop with Auto Shutoff. • Standard DC Injection Braking for value set in A434 [DC Brake Time]. OR • Drive shuts off if the drive detects that the motor is stopped.
	8	"Ramp+EM B,CF"	Ramp to Stop with EM Brake Control. Stop command clears active fault.
	9	"Ramp+EM Brk"	Ramp to Stop with EM Brake Control.
	10	"PointStp,CF"	PointStop. Stop command clears active fault.
	11	"PointStop"	PointStop.

Provides a method to stop at a constant distance instead of a fixed rate.

When a Stop command is given, the distance required for the machine to travel to standstill based on the programmed maximum speed and deceleration time is calculated. If the drive is running slower than the maximum speed, the function will apply a calculated deceleration time that allows the machine to travel to standstill in the same distance based on the current speed.

It is recommended to use braking resistors or set A550 [Bus Reg Enable] to 0 "Disabled" for better performance.

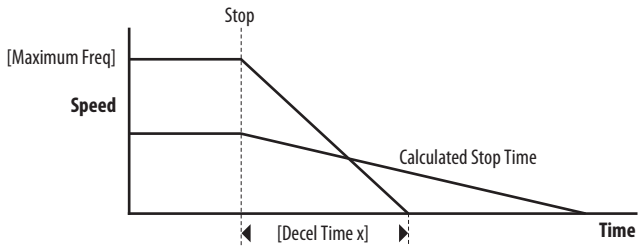

Basic Program Group *(continued)*

P046 [Start Source 1]
P048 [Start Source 2]
P050 [Start Source 3]

Related Parameter(s): b012, t064, C125

Stop drive before changing this parameter.

Configures the start source of the drive. Changes to these inputs take effect as soon as they are entered. P046 [Start Source 1] is the factory default start source unless overridden.
See Start and Speed Reference Control on page 49 for more information.

IMPORTANT For all settings except when t064 [2-Wire Mode] is set to 1 "Level Sense", the drive must receive a leading edge from the start input for the drive to start after a stop input, loss of power, or fault condition.

Options	1	"Keypad"	[Start Source 1] default
	2	"DigIn TrmBlk"	[Start Source 2] default
	3	"Serial/DSI"	[Start Source 3] default for PowerFlex 523
	4	"Network Opt"(1)	
	5	"EtherNet/IP"(2)	[Start Source 3] default for PowerFlex 525

(1) Select this setting if using the optional PowerFlex 25-COMM-E2P, 25-COMM-D, or 25-COMM-P adapters as the start source.
(2) Setting is specific to PowerFlex 525 drives only.

P047 [Speed Reference1]
P049 [Speed Reference2]
P051 [Speed Reference3]

Related Parameter(s): C125

Selects the source of speed command for the drive. Changes to these inputs take effect as soon as they are entered. P047 [Speed Reference1] is the factory default speed reference unless overridden.
See Start and Speed Reference Control on page 49 for more information.

Options	1	"Drive Pot"	[Speed Reference1] default
	2	"Keypad Freq"	
	3	"Serial/DSI"	[Speed Reference3] default for PowerFlex 523
	4	"Network Opt"(1)	
	5	"0-10V Input"	[Speed Reference2] default
	6	"4-20mA Input"	
	7	"Preset Freq"	
	8	"Anlg In Mult"(2)	
	9	"MOP"	
	10	"Pulse Input"	
	11	"PID1 Output"	
	12	"PID2 Output"(2)	
	13	"Step Logic"(2)	
	14	"Encoder"(2)	
	15	"EtherNet/IP"(2)	[Speed Reference3] default for PowerFlex 525
	16	"Positioning"(2)	Referencing from A558 [Positioning Mode]

(1) Select this setting if using the optional PowerFlex 25-COMM-E2P, 25-COMM-D, or 25-COMM-P adapters as the speed reference.
(2) Setting is specific to PowerFlex 525 drives only.

P052 [Average kWh Cost]

Related Parameter(s): b025

Sets the average cost per kWh.

Values	Default:	0.00
	Min/Max:	0.00/655.35
	Display:	0.01

Basic Program Group *(continued)*

P053 [Reset To Defalts]

Stop drive before changing this parameter.

Resets all parameters to their factory default values. After a Reset command, the value of this parameter returns to zero.

Parameters that are NOT Reset when P053 = 1

Parameter	Parameter	Parameter
P030 [Language]	C138 [EN Gateway Cfg 2]	C159 [EN Data Out 3]
C121 [Comm Write Mode]	C139 [EN Gateway Cfg 3]	C160 [EN Data Out 4]
C122 [Cmd Stat Select]	C140 [EN Gateway Cfg 4]	C161 [Opt Data In 1]
C123 [RS485 Data Rate]	C141 [EN Rate Cfg]	C162 [Opt Data In 2]
C124 [RS485 Node Addr]	C143 [EN Comm Flt Actn]	C163 [Opt Data In 3]
C124 [Comm Loss Action]	C144 [EN Idle Flt Actn]	C164 [Opt Data In 4]
C126 [Comm Loss Time]	C145 [EN Flt Cfg Logic]	C165 [Opt Data Out 1]
C127 [RS485 Format]	C146 [EN Flt Cfg Ref]	C166 [Opt Data Out 2]
C128 [EN Addr Sel]	C147 [EN Flt Cfg DL 1]	C167 [Opt Data Out 3]
C129 [EN IP Addr Cfg 1]	C148 [EN Flt Cfg DL 2]	C168 [Opt Data Out 4]
C130 [EN IP Addr Cfg 2]	C149 [EN Flt Cfg DL 3]	C169 [MultiDrv Sel]
C131 [EN IP Addr Cfg 3]	C150 [EN Flt Cfg DL 4]	C171 [Drv 1 Addr]
C132 [EN IP Addr Cfg 4]	C153 [EN Data In 1]	C172 [Drv 2 Addr]
C133 [EN Subnet Cfg 1]	C154 [EN Data In 2]	C173 [Drv 3 Addr]
C134 [EN Subnet Cfg 2]	C155 [EN Data In 3]	C174 [Drv 4 Addr]
C135 [EN Subnet Cfg 3]	C156 [EN Data In 4]	C175 [DSI I/O Cfg]
C136 [EN Subnet Cfg 4]	C157 [EN Data Out 1]	GC [Parameters in Custom Group]
C137 [EN Gateway Cfg 1]	C158 [EN Data Out 2]	

Parameters that are Reset when P053 = 3

Parameter Name
P031 [Motor NP Volts]
P033 [Motor OL] Current
P034 [Motor NP FLA]
P035 [Motor NP Poles]
P038 [Voltage Class]
A435 [DC Brake Level]
A484 [Current Limit 1]
A485 [Current Limit 2]
A486 [Shear Pin1 Level]
A488 [Shear Pin2 Level]
A490 [Load Loss Level]
A496 [IR Voltage Drop]
A497 [Flux Current Ref]
A530 [Boost Select]
A531 [Start Boost]
A532 [Break Voltage]
A533 [Break Frequency]
A534 [Maximum] Voltage

Options			
	0	"Ready/Idle" (Default)	
	1	"Param Reset"	Does not reset custom groups, parameter P030 [Language], and communication parameters.
	2	"Factory Rset"	Restore drive to factory condition.
	3	"Power Reset"	Resets only power parameters. Can be used when swapping power modules.
	4	"Module Reset"(1) (2)	Power cycle of the drive, **NO** parameters are reset.

(1) Setting is available in PowerFlex 525 FRN 5.xxx and later.

(2) Setting is available in PowerFlex 523 FRN 3.xxx and later.

Terminal Block Group

t062	**[DigIn TermBlk 02]**	**t063**	**[DigIn TermBlk 03]**
t065	**[DigIn TermBlk 05]**	**t066**	**[DigIn TermBlk 06]**
t067	**[DigIn TermBlk 07]**	**t068**	**[DigIn TermBlk 08]**

PF 525 PowerFlex 525 only.

Related Parameter(s): b012, b013, b014, P045, P046, P048, P049, P050, P051, t064, t086, A410-A425, A427, A431, A432, A433, A434, A435, A442, A443, A488, A535, A560, A562, A563, A567, A571

Stop drive before changing this parameter.

Programmable digital input. Changes to these inputs takes effect as soon as they are entered. If a digital input is set for a selection that is only usable on one input, no other input can be set for the same selection.

Options	0	"Not Used"	Terminal has no function but can be read over network communications with b013 [Contrl In Status] and b014 [Dig In Status].
	1	"Speed Ref 2"	Selects P049 [Speed Reference2] as drive's speed command.
	2	"Speed Ref 3"	Selects P051 [Speed Reference3] as drive's speed command.
	3	"Start Src 2"	Selects P048 [Start Source 2] as control source to start the drive.
	4	"Start Src 3"	Selects P050 [Start Source 3] as control source to start the drive.
	5	"Spd + Strt 2"	[DigIn TermBlk 07] default. Selects combination of P049 [Speed Reference2] and P048 [Start Source 2] as speed command with control source to start the drive.
	6	"Spd + Strt 3"	Selects combination of P051 [Speed Reference3] and P050 [Start Source 3] as speed command with control source to start the drive.
	7	"Preset Freq" (PF523: only for DigIn TermBlk 03, 05, and 06) (PF525: only for DigIn TermBlk 05...08)	[DigIn TermBlk 05] and [DigIn TermBlk 06] default. • Selects a preset frequency in Velocity mode (P047, P049, P051 [Speed Referencex] = 1...15). See A410...A425 [Preset Freq x]. • Selects a preset frequency and position in Positioning mode (P047, P049, P051 [Speed Referencex] = 16). See L200...L214 [Step Units x] (only for PowerFlex 525 drives). **IMPORTANT** Digital Inputs have priority for frequency control when programmed as Preset Speed and are active. See Start Source and Speed Reference Selection on page 49 for more information.
	8	"Jog"	• When input is present, drive accelerates according to the value set in A432 [Jog Accel/Decel] and ramps to the value set in A431 [Jog Frequency]. • When input is removed, drive ramps to a stop according to the value set in A432 [Jog Accel/Decel]. • A valid Start command will override this input.
	9	"Jog Forward"	[DigIn TermBlk 08] default. Drive accelerates to A431 [Jog Frequency] according to A432 [Jog Accel/Decel] and ramps to a stop when input becomes inactive. A valid Start command will override this input.
	10	"Jog Reverse"	Drive accelerates to A431 [Jog Frequency] according to A432 [Jog Accel/Decel] and ramps to a stop when input becomes inactive. A valid Start command will override this input.
	11	"Acc/Dec Sel2"(1)	If active, determines which Accel/Decel time will be used for all ramp rates except jog. Can be used with option 29 "Acc/Dec Sel3" for additional Accel/Decel times. See A442 [Accel Time 2] for more information.
	12	"Aux Fault"	When enabled, an F002 "Auxiliary Input" fault will occur when the input is removed.
	13	"Clear Fault"	When active, clears an active fault.
	14	"RampStop,CF"	Causes drive to immediately ramp to a stop regardless of how P045 [Stop Mode] is set.
	15	"CoastStop,CF"	Causes drive to immediately coast to a stop regardless of how P045 [Stop Mode] is set.
	16	"DCInjStop,CF"	Causes drive to immediately begin a DC Injection stop regardless of how P045 [Stop Mode] is set.
	17	"MOP Up"	Increases the value of A427 [MOP Freq] at the rate set in A430 [MOP Time].
	18	"MOP Down"	Decreases the value of A427 [MOP Freq] at the rate set in A430 [MOP Time].
	19	"Timer Start"(1)	Clears and starts the timer function. May be used to control the relay or opto outputs.
	20	"Counter In"(1)	Starts the counter function. May be used to control the relay or opto outputs.
	21	"Reset Timer"	Resets the internal active timer, d365 [Timer Status]. For more information, see Timer Function on page 211.
	22	"Reset Countr"	Resets the count in the accumulated internal active counter, d364 [Counter Status]. For more information, see Counter Function on page 212.
	23	"Rset Tim&Cnt"	Resets both the internal active timer and accumulated internal active counter.
	24	"Logic In 1"(1)(2)	Logic function input number 1. May be used to control the relay or opto outputs (t076, t081 [Relay Outx Sel] and t069, t072 [Opto Outx Sel], options 11...14). May be used in conjunction with StepLogic parameters L180...L187 [Stp Logic x].
	25	"Logic In 2"(1)(2)	Logic function input number 2. May be used to control the relay or opto outputs (t076, t081 [Relay Outx Sel] and t069, t072 [Opto Outx Sel], options 11...14). May be used in conjunction with StepLogic parameters L180...L187 [Stp Logic x].

Options

26 "Current Lmt2"[2]	When active, A485 [Current Limit 2] determines the drive current limit level.
27 "Anlg Invert"	Inverts the scaling of the analog input levels set in t091 [Anlg In 0-10V Lo] and t092 [Anlg In 0-10V Hi] or t095 [Anlg In4-20mA Lo] and t096 [Anlg In4-20mA Hi].
28 "EM Brk Rlse"	If EM brake function is enabled, this input releases the brake. See t086 [EM Brk Off Delay] for more information. **ATTENTION:** If a hazard of injury due to movement of equipment or material exists, an auxiliary mechanical braking device must be used.
29 "Acc/Dec Sel3"[1]	If active, determines which Accel/Decel time is used for all ramp rates except jog. Used with option 11 "Acc/Dec Sel2" for the Accel/Decel times listed in this table.
30 "Precharge En"	Forces drive into precharge state. Typically controlled by auxiliary contact on the disconnect at the DC input to the drive. If this input is assigned, it must be energized for the pre-charge relay to close and for the drive to run. If it is de-energized, the pre-charge relay opens and the drive coasts to a stop.
31 "Inertia Dcel"	Forces drive into Inertia Ride-Through state. The drive attempts to regulate the DC bus at the current level.
32 "Sync Enable"	Must be used in order to hold the existing frequency when Sync Time is set to enable speed synchronization. When this input is released the drive accelerates to the commanded frequency in A571 [Sync Time].
33 "Traverse Dis"	When an input is programmed the traverse function is disabled while this input is active. See A567 [Max Traverse].
34 "Home Limit"[2]	In Positioning mode, indicates the drive is at the home position. See Appendix E for more information on Positioning.
35 "Find Home"[2]	In Positioning mode, causes the drive to return to the Home position when a Start command is issued. Uses A562 [Find Home Freq] and A563 [Find Home Dir] until the "Home Limit" input is activated. If it passes this point, it then runs in the reverse direction at 1/10th the frequency of [Find Home Freq] until the "Home Limit" is activated again. As long as this input is active, any start command causes the drive to enter the homing routine. Only functions if in Positioning mode. Once the Find Home routine has finished, the drive stops. See Appendix E for more information on Positioning.
36 "Hold Step"[2]	In Positioning mode, overrides other inputs and causes the drive to remain at its current step (running at zero speed once it reaches its position) until released. While in "Hold", the drive ignores any input command which would normally result in a move to a new step. Timers continue to run. Therefore, when the Hold is removed, the drive must see any required digital inputs transition (even if they already transitioned during the hold), but it does not reset any timer. See Appendix E for more information on Positioning.
37 "Pos Redefine"[2]	In Positioning mode, resets the home position to the current position of the machine. See Appendix E for more information on Positioning.
38 "Force DC"	If the drive is not running, causes the drive to apply a DC Holding current (A435 [DC Brake Level], ignoring A434 [DC Brake Time]) while the input is applied.
39 "Damper Input"	When active, drive is allowed to run normally. When inactive, drive is forced into sleep mode and is prevented from accelerating to command speed.
40 "Purge"[1]	Starts the drive at A433 [Purge Frequency] regardless of the selected control source. Supersedes the keypad Control function as well as any other control command to take control of the drive. Purge can occur, and is operational, at any time whether the drive is running or stopped regardless of the selected logic source selection. If a valid stop (other than from comms or SW enable) is present, the drive will not start on the purge input transition. **ATTENTION:** If a hazard of injury due to movement of equipment or material exists, an auxiliary mechanical braking device must be used.
41 "Freeze-Fire"	When inactive, will cause an immediate F094 "Function Loss" fault. Use to safely bypass the drive with an external switching device.
42 "SW Enable"	Works like an interlock that has to be active for the drive to run.
43 "SherPin1 Dis"	Disables shear pin 1 but leaves shear pin 2 active. If A488 [Shear Pin 2 Level] is greater than 0.0 A, shear pin 2 is enabled.
44 Reserved	
45 Reserved	
46 Reserved	
47 Reserved	

Option		Description
29	11	
0	0	Acc/Dec 1
0	1	Acc/Dec 2
1	0	Acc/Dec 3
1	1	Acc/Dec 4

Options	48 "2-Wire FWD" (only for DigIn TermBlk 02)	[DigIn TermBlk 02] default. Select 2-Wire FWD for this input. Select this option and set P046, P048 or P050 [Start Source x] to 2 "DigIn TrmBlk" to configure [Start Source x] to a 2-wire run forward mode. Also see t064 [2-Wire Mode] for level trigger settings.	
	49 "3-Wire Start" (only for DigIn TermBlk 02)	Select 3-Wire Start for this input. Select this option and set P046, P048 or P050 [Start Source x] to 2 "DigIn TrmBlk" to configure [Start Source x] to a 3-wire start mode.	
	50 "2-Wire REV" (only for DigIn TermBlk 03)	[DigIn TermBlk 03] default. Select 2-Wire REV for this input. Select this option and set P046, P048 or P050 [Start Source x] to 2 "DigIn TrmBlk" to configure [Start Source x] to a 2-wire run reverse mode. Also see t064 [2-Wire Mode] for level trigger settings. For PowerFlex 523 drives, this setting will be disabled If [DigIn TermBlk 03] is set to 7 "Preset Freq".	
	51 "3-Wire Dir" (only for DigIn TermBlk 03)	Select 3-Wire Dir for this input. Select this option and set P046, P048 or P050 [Start Source x] to 2 "DigIn TrmBlk" to change the direction of [Start Source x]. For PowerFlex 523 drives, this setting will be disabled If [DigIn TermBlk 03] is set to 7 "Preset Freq".	
	52 "Pulse Train" (PF523: only for DigIn TermBlk 05) (PF525: only for DigIn TermBlk 07)	Select pulse train for this input. Use P047, P049 and P051 [Speed Referencex] to select pulse input. Jumper for DigIn TermBlk 05 or 07 Sel must be moved to Pulse In.	

Drive Start Condition Matrix for t062 and t063

	t062 Setting	
t063 Setting	**3-Wire Start**	**2-Wire FWD**
2-Wire REV	Drive will not start	OK
3-Wire Dir	OK	Drive will not start

(1) This function may be tied to one input only.
(2) Setting is specific to PowerFlex 525 drives only.

t064 [2-Wire Mode]

Related Parameter(s): P045, P046, P048, P050, t062, t063

Stop drive before changing this parameter.

Programs the mode of trigger only for t062 [DigIn TermBlk 02] and t063 [DigIn TermBlk 03] when 2-wire option is being selected as P046, P048 or P050 [Start Source x].

Options

0 "Edge Trigger" (Default)

Standard 2-Wire operation.

1 "Level Sense"

- I/O Terminal 01 "Stop" = Coast to stop. Drive will restart after a Stop command when:
  - Stop is removed
    and
  - Start is held active
- I/O Terminal 03 "Run REV"

ATTENTION: Hazard of injury exists due to unintended operation. When t064 [2-Wire Mode] is set to option 1, and the Run input is maintained, the Run inputs do not need to be toggled after a Stop input for the drive to run again. A Stop function is provided only when the Stop input is active (open).

ATTENTION: When operating in 2-Wire Level Sense (Run Level), the PowerFlex 523 and PowerFlex 525 drive should only be controlled from the Digital Input Terminal Blocks. This should NOT be used with any other DSI or Network device.

2 "Hi-Spd Edge"

IMPORTANT There is greater potential voltage on the output terminals when using this option.

- Outputs are kept in a ready-to-run state. The drive will respond to a Start command within 10 ms.
- I/O Terminal 01 "Stop" = Coast to stop.
- I/O Terminal 03 "Run REV"

3 "Momentary"

- Drive will start after a momentary input from either the Run FWD input (I/O Terminal 02) or the Run REV input (I/O Terminal 03).
- I/O Terminal 01 "Stop" = Stop according to the value set in P045 [Stop Mode].

t069 [Opto Out1 Sel]
t072 [Opto Out2 Sel]

Related Parameter(s): P046, P048, P050, t070, t073, t077, t082, t086, t087, t093, t094, t097, A541, A564

PF 525 PowerFlex 525 only.

Determines the operation of the programmable digital outputs.

Options	Setting Output Changes State When...	Hysteresis
0 "Ready/Fault"	Opto outputs are active when power is applied. Indicates that the drive is ready for operation. Opto outputs are inactive when power is removed or a fault occurs.	None
1 "At Frequency"	Drive reaches commanded frequency.	0.5 Hz above; 1.0 Hz below
2 "MotorRunning"	Motor is receiving power from the drive.	None
3 "Reverse"	Drive is commanded to run in reverse direction.	None
4 "Motor Overld"	Motor overload condition exists.	100 ms time delay on or off
5 "Ramp Reg"	Ramp regulator is modifying the programmed accel/decel times to avoid an overcurrent or overvoltage fault from occurring.	100 ms time delay on or off
6 "Above Freq"	Drive exceeds the frequency (Hz) value set in t070 or t073 [Opto Outx Level].	100 ms time delay on or off
7 "Above Cur"	Drive exceeds the current (% Amps) value set in t070 or t073 [Opto Outx Level]. **IMPORTANT** Value for t070 or t073 [Opto Outx Level] must be entered in percent of drive rated output current.	100 ms time delay on or off
8 "Above DCVolt"	Drive exceeds the DC bus voltage value set in t070 or t073 [Opto Outx Level].	100 ms time delay on or off
9 "Retries Exst"	Value set in A541 [Auto Rstrt Tries] is exceeded.	None
10 "Above Anlg V"	Analog input voltage (0-10V input) exceeds the value set in t070 or t073 [Opto Outx Level]. **IMPORTANT** Do not use if t093 [10V Bipolar Enbl] is set to 1 "Bi-Polar In".	100 ms time delay on or off
11 "Above PF Ang"	Power Factor angle exceeds the value set in t070 or t073 [Opto Outx Level].	100 ms time delay on or off
12 "Anlg In Loss"	Analog input loss has occurred. Program t094 [Anlg In V Loss] or t097 [Anlg In mA Loss] for desired action when input loss occurs.	On, 2 mA / ±1V Off, 3 mA / ±1.5V
13 "ParamControl"	Output is directly controlled by the state of the t070 or t073 [Opto Outx Level]. A value of 0 causes the output to turn off. A value of 1 or greater in this parameter causes the output to turn on.	None
14 "NonRec Fault"	• Value set in A541 [Auto Rstrt Tries] is exceeded or • A541 [Auto Rstrt Tries] is not enabled or • A non-resettable fault has occurred.	None
15 "EM Brk Cntrl"	EM Brake is energized. Program t087 [EM Brk On Delay] and t086 [EM Brk Off Delay] for desired action.	None
16 "Thermal OL"	Relay energizes when thermal Motor overload counter is above the value set in t077 or t082 [Relay Outx Level]. It also energizes if the drive is within 5 °C of the drive overheat trip point.	None
17 "Amb OverTemp"	Relay energizes when control module over temperature occurs.	None
18 "Local Active"	Active when drive P046, P048 or P050 [Start Source x] is in local keypad control.	None
19 "Comm Loss"	Active when communication is lost from any comm source with reference or control.	None
20 "Logic In 1"	An input is programmed as "Logic Input 1" and is active.	None
21 "Logic In 2"	An input is programmed as "Logic Input 2" and is active.	None
22 "Logic 1 & 2"	Both Logic inputs are programmed and active.	None
23 "Logic 1 or 2"	One or both Logic inputs are programmed and one or both is active.	None
24 "StpLogic Out"	Drive enters StepLogic step with Command Word set to enable Logic output.	None
25 "Timer Out"	Timer has reached the value set in t070 or t073 [Opto Outx Level] or not timing.	None
26 "Counter Out"	Counter has reached the value set in t070 or t073 [Opto Outx Level] or not counting.	None
27 "At Position"	Drive is in Positioning mode and has reached the commanded position. Tolerance is adjusted with A564 [Encoder Pos Tol].	–
28 "At Home"	Drive is in Positioning mode and has reached the home position. Tolerance is adjusted with A564 [Encoder Pos Tol].	–
29 "Safe-Off"	Both safe-off inputs are active.	–
30 "SafeTqPermit"(1)	Both safe-off inputs are inactive (closed).	–
31 "AutoRst Ctdn"(1)	Drive is counting down to an automatic restart.	–

Values		
	Default: Opto Out1 Sel: Opto Out2 Sel:	 2 1
	Min/Max:	0/31
	Display:	1

(1) Setting is available in FRN 5.xxx and later.

Terminal Block Group *(continued)*

t070 [Opto Out1 Level]
t073 [Opto Out2 Level]

Related Parameter(s): t069, t072

32 32 bit parameter.

PF 525 PowerFlex 525 only.

Determines the on/off point for the digital outputs when t069 or t072 [Opto Outx Sel] is set to the values shown below.

Min/Max Value Range Based On [Opto Outx Sel] Setting							
6:	0...500 Hz	10:	0...100%	16:	0.1...9999 s	20:	0/1
7:	0...180%	11	0/1	17:	1...9999 counts	26:	0...150%
8:	0...815V	13	0...800	18:	0...180°	–	

Values	Default:	0.0
	Min/Max:	0.0/9999.0
	Display:	0.1

t075 [Opto Out Logic]

PF 525 PowerFlex 525 only.

Determines the logic (Normally Open/NO or Normally Closed/NC) of the digital outputs only.

Setting	Digital Out 1 Logic	Digital Out 2 Logic
0	NO	NO
1	NC	NO
2	NO	NC
3	NC	NC

Values	Default:	0
	Min/Max:	0/3
	Display:	1

t076 [Relay Out1 Sel] Related Parameter(s): P046, P048, P050, t070, t073, t077, t082, t086, t087, t093, t094, t097, A541, A564

t081 [Relay Out2 Sel]

PF 525 PowerFlex 525 only.

Determines the operation of the programmable output relay.

Options	Output Relay Changes State When...	Hysteresis
0 "Ready/Fault"	Relay changes state when power is applied. Indicates that the drive is ready for operation. Relay returns drive to shelf state when power is removed or a fault occurs.	None
1 "At Frequency"	Drive reaches commanded frequency.	0.5 Hz above; 1.0 Hz below
2 "MotorRunning"	Motor is receiving power from the drive.	None
3 "Reverse"	Drive is commanded to run in reverse direction.	None
4 "Motor OverId"	Motor overload condition exists.	100 ms time delay on or off
5 "Ramp Reg"	Ramp regulator is modifying the programmed accel/ decel times to avoid an overcurrent or overvoltage fault from occurring.	100 ms time delay on or off
6 "Above Freq"	Drive exceeds the frequency (Hz) value set in t077 or t082 [Relay Outx Level].	100 ms time delay on or off
7 "Above Cur"	Drive exceeds the current (% Amps) value set in t077 or t082 [Relay Outx Level]. **IMPORTANT** Value for t077 or t082 [Relay Outx Level] must be entered in percent of drive rated output current.	100 ms time delay on or off
8 "Above DCVolt"	Drive exceeds the DC bus voltage value set in t077 or t082 [Relay Outx Level].	100 ms time delay on or off
9 "Retries Exst"	Value set in A541 [Auto Rstrt Tries] is exceeded.	None
10 "Above Anlg V"	Analog input voltage (0-10V input) exceeds the value set in t077 or t082 [Relay Outx Level]. **IMPORTANT** Do not use if t093 [10V Bipolar Enbl] is set to 1 "Bi-Polar In".	100 ms time delay on or off
11 "Above PF Ang"	Power Factor angle exceeds the value set in t077 or t082 [Relay Outx Level].	100 ms time delay on or off
12 "Anlg In Loss"	Analog input loss has occurred. Program t094 [Anlg In V Loss] or t097 [Anlg In mA Loss] for desired action when input loss occurs.	On, 2 mA / ±1V Off, 3 mA / ±1.5V
13 "ParamControl"	Output will be directly controlled by the state of the t077 or t082 [Relay Outx Level]. A value of 0 causes the output to turn off. A value of 1 or greater in this parameter causes the output to turn on.	None
14 "NonRec Fault"	• Value set in A541 [Auto Rstrt Tries] is exceeded or • A541 [Auto Rstrt Tries] is not enabled or • A non-resettable fault has occurred.	None
15 "EM Brk Cntrl"	EM Brake is energized. Program t087 [EM Brk On Delay] and t086 [EM Brk Off Delay] for desired action.	None
16 "Thermal OL"	Relay energizes when thermal Motor overload counter is above the value set in t077 or t082 [Relay Outx Level]. It also energizes if the drive is within 5°C of the drive overheat trip point.	None
17 "Amb OverTemp"	Relay energizes when control module over temperature occurs.	None
18 "Local Active	Active when drive P046, P048 or P050 [Start Source x] is in local keypad control.	None
19 "Comm Loss"	Active when communication is lost from any comm source with reference or control.	None
20 "Logic In 1"(1)	An input is programmed as "Logic Input 1" and is active.	None
21 "Logic In 2"(1)	An input is programmed as "Logic Input 2" and is active.	None
22 "Logic 1 & 2"(1)	Both Logic inputs are programmed and active.	None
23 "Logic 1 or 2"(1)	One or both Logic inputs are programmed and one or both is active.	None
24 "StpLogic Out"(1)	Drive enters StepLogic step with Command Word set to enable Logic output.	None
25 "Timer Out"	Timer has reached the value set in t077 or t082 [Relay Outx Level] or not timing.	None
26 "Counter Out"	Counter has reached the value set in t077 or t082 [Relay Outx Level] or not counting.	None
27 "At Position"(1)	Drive is in Positioning mode and has reached the commanded position. Tolerance is adjusted with A564 [Encoder Pos Tol].	–
28 "At Home"(1)	Drive is in Positioning mode and has reached the home position. Tolerance is adjusted with A564 [Encoder Pos Tol].	–
29 "Safe-Off"(1)	Both safe-off inputs are active.	–
30 "SafeTqPermit"(1)(2)	Both safe-off inputs are inactive (closed).	–
31 "AutoRst Ctdn"(1)(2)	Drive is counting down to an automatic restart.	–

Values		
	Default: Relay Out1 Sel: Relay Out2 Sel:	 0 2
	Min/Max:	0/31
	Display:	1

(1) Setting is specific to PowerFlex 525 drives only.

(2) Setting is available in FRN 5.xxx and later.

t077 [Relay Out1 Level]

Related Parameter(s): t076, t081

t082 [Relay Out2 Level]

PF 525 PowerFlex 525 only.

32 32 bit parameter.

Determines the on/off point for the output relay when t076 or t081 [Relay Outx Sel] is set to the values shown below.

Min/Max Value Range Based On [Relay Outx Sel] Setting							
6:	0...500 Hz	10:	0...100%	16:	0.1...9999 s	20:	0/1
7:	0...180%	11:	0/1	17:	1...9999 counts	26:	0...150%
8:	0...815V	13:	0...800	18:	0...180°	–	

Values	Default:	0.0
	Min/Max:	0.0/9999.0
	Display:	0.1

t079 [Relay 1 On Time]

t084 [Relay 2 On Time]

PF 525 PowerFlex 525 only.

Sets the delay time before Relay energizes after required condition is met.

Values	Default:	0.0 s
	Min/Max:	0.0/600.0 s
	Display:	0.1 s

t080 [Relay 1 Off Time]

t085 [Relay 2 Off Time]

PF 525 PowerFlex 525 only.

Sets the delay time before Relay de-energizes after required condition ceases.

Values	Default:	0.0 s
	Min/Max:	0.0/600.0 s
	Display:	0.1 s

t086 [EM Brk Off Delay]

Related Parameter(s): P045

Sets the time the drive remains at minimum frequency before ramping up to the commanded frequency (and engaging the brake coil relay) if Electromechanical (EM) Brake Control Mode is enabled with P045 [Stop Mode].

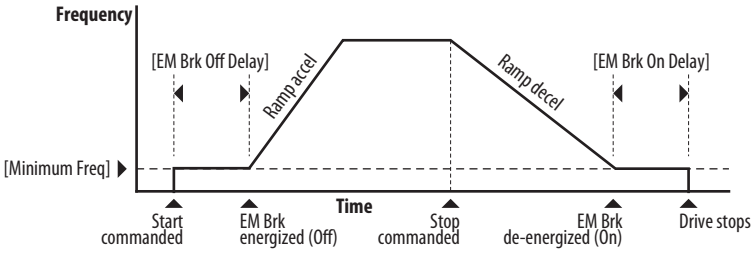

Values	Default:	2.00 s
	Min/Max:	0.00/10.00 s
	Display:	0.01 s

Terminal Block Group *(continued)*

t087 [EM Brk On Delay] Related Parameter(s): P045

Sets the time the drive remains at minimum frequency (after releasing the brake coil relay) before stopping if EM Brake Control Mode is enabled with P045 [Stop Mode].

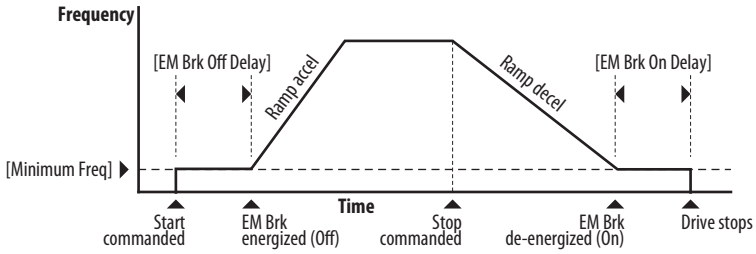

Values	Default:	2.00 s
	Min/Max:	0.00/10.00 s
	Display:	0.01 s

t088 [Analog Out Sel] Related Parameter(s): t090

The 0-10V, 0-20 mA or 4-2 0 mA analog output can be used to provide a signal proportional to several drive conditions. This parameter also selects which analog calibration parameters to use.(1)

Options	Output Range	Minimum Output Value	Maximum Output Value = t089 [Analog Out High]	Filter(1)	Related Parameter
0 "OutFreq 0-10"	0-10V	0V = 0 Hz	[Maximum Freq]	None	b001
1 "OutCurr 0-10"	0-10V	0V = 0 A	200% Drive Rated Current	Filter A	b003
2 "OutVolt 0-10"	0-10V	0V = 0V	120% Drive Rated Output Volts	None	b004
3 "OutPowr 0-10"	0-10V	0V = 0 kW	200% Drive Rated Power	Filter A	b017
4 "OutTorq 0-10"	0-10V	0V = 0 A	200% Drive Rated Current	Filter A	d382
5 "TstData 0-10"	0-10V	0V = 0000	65535 (Hex FFFF)	None	–
6 "Setpnt 0-10"	0-10V	0V = 0%	100.0% Setpoint setting	None	t090
7 "DCVolt 0-10"	0-10V	0V = 0V	100.0% of trip value	None	b005
8 "OutFreq 0-20"	0-20 mA	0 mA = 0 Hz	[Maximum Freq]	None	b001
9 "OutCurr 0-20"	0-20 mA	0 mA = 0 A	200% Drive Rated Current	Filter A	b003
10 "OutVolt 0-20"	0-20 mA	0 mA = 0V	120% Drive Rated Output Volts	None	b004
11 "OutPowr 0-20"	0-20 mA	0 mA = 0 kW	200% Drive Rated Power	Filter A	b017
12 "OutTorq 0-20"	0-20 mA	0 mA = 0 A	200% Drive Rated Current	Filter A	d382
13 "TstData 0-20"	0-20 mA	0 mA = 0000	65535 (Hex FFFF)	None	–
14 "Setpnt 0-20"	0-20 mA	0 mA = 0%	100.0% Setpoint setting	None	t090
15 "DCVolt 0-20"	0-20 mA	0 mA = 0V	100.0% of trip value	None	b005
16 "OutFreq 4-20"	4-20 mA	4 mA = 0 Hz	[Maximum Freq]	None	b001
17 "OutCurr 4-20"	4-20 mA	4 mA = 0 A	200% Drive Rated Current	Filter A	b003
18 "OutVolt 4-20"	4-20 mA	4 mA = 0V	120% Drive Rated Output Volts	None	b004
19 "OutPowr 4-20"	4-20 mA	4 mA = 0 kW	200% Drive Rated Power	Filter A	b017
20 "OutTorq 4-20"	4-20 mA	4 mA = 0 A	200% Drive Rated Current	Filter A	d382
21 "TstData 4-20"	4-20 mA	4 mA = 0000	65535 (Hex FFFF)	None	–
22 "Setpnt 4-20"	4-20 mA	4 mA = 0%	100.0% Setpoint setting	None	t090
23 "DCVolt 4-20"	4-20 mA	4 mA = 0V	100.0% of trip value	None	b005

(1) Filter A is a single pole digital filter with a 162 ms time constant. Given a 0...100% step input from a steady state, the output of Filter A takes 500 ms to get to 95% of maximum, 810 ms to get to 99%, and 910 ms to get to 100%.

Values	Default:	0
	Min/Max:	0/23
	Display:	1

(1) Parameter is also available in PowerFlex 523 FRN 3.xxx and later. PowerFlex 523 series B drive is required.

Terminal Block Group *(continued)*

t089 [Analog Out High]

Scales the maximum output value (V or mA) when the source setting is at maximum.(1)

Values	Default:	100%
	Min/Max:	0/800%
	Display:	1%

(1) Parameter is also available in PowerFlex 523 FRN 3.xxx and later. PowerFlex 523 series B drive is required.

t090 [Anlg Out Setpt] Related Parameter(s): t088

Sets the percentage of output desired when t088 [Analog Out Sel] is set to 6, 14 or 22 "Analog Setpoint".(1)

Values	Default:	0.0%
	Min/Max:	0.0/100.0%
	Display:	0.1%

(1) Parameter is also available in PowerFlex 523 FRN 3.xxx and later. PowerFlex 523 series B drive is required.

t091 [Anlg In 0-10V Lo] Related Parameter(s): P043, t092, t093

Stop drive before changing this parameter.

Sets the percentage (based on 10V) of input voltage applied to the 0-10V analog input used to represent P043 [Minimum Freq].
Analog inversion can be accomplished by setting this value larger than t092 [Anlg In 0-10V Hi].
If t093 [10V Bipolar Enbl] is set to 1 "Bi-Polar In", this parameter is ignored.

Values	Default:	0.0%
	Min/Max:	0.0/200.0%
	Display:	0.1%

t092 [Anlg In 0-10V Hi] Related Parameter(s): P044, t091, t093

Stop drive before changing this parameter.

Sets the percentage (based on 10V) of input voltage applied to the 0-10V analog input used to represent P044 [Maximum Freq].
Analog inversion can be accomplished by setting this value smaller than t091 [Anlg In 0-10V Lo].
If t093 [10V Bipolar Enbl] is set to 1 "Bi-Polar In", the same value applies to positive and negative voltage.

Values	Default:	100.0%
	Min/Max:	0.0/200.0%
	Display:	0.1%

t093 [10V Bipolar Enbl] Related Parameter(s): t091, t092

PF 525 PowerFlex 525 only.

Enables/disables bi-polar control. In bi-polar mode direction is commanded by the polarity of the voltage.
If bi-polar control is enabled, P043 [Minimum Freq] and t091 [Anlg In 0-10V Lo] are ignored.

Options	0	"Uni-Polar In" (Default)	0-10V only
	1	"Bi-Polar In"	±10V

Terminal Block Group *(continued)*

t094 [Anlg In V Loss] Related Parameter(s): P043, P044, A426, A427

Sets the response to a loss of input. When the 0-10V input (or –10 to +10V) is used for any reference, any input less than 1V is reported as a signal loss. Input must exceed 1.5V for the signal loss condition to end.
If enabled, this function affects any input that is being used as a speed reference, PID reference or PID setpoint in the drive.

Options	0	"Disabled" (Default)
	1	"Fault (F29)"
	2	"Stop"
	3	"Zero Ref"
	4	"Min Freq Ref"
	5	"Max Freq Ref"
	6	"Key Freq Ref"
	7	"MOP Freq Ref"
	8	"Continu Last"

t095 [Anlg In4-20mA Lo] Related Parameter(s): P043, t096

Stop drive before changing this parameter.

Sets the percentage (based on 4-20 mA) of input current applied to the 4-20 mA analog input used to represent P043 [Minimum Freq].
Analog inversion can be accomplished by setting this value larger than t096 [Anlg In4-20mA Hi].

Values	Default:	0.0%
	Min/Max:	0.0/100.0%
	Display:	0.1%

t096 [Anlg In4-20mA Hi] Related Parameter(s): P044, t095

Stop drive before changing this parameter.

Sets the percentage (based on 4-20 mA) of input current applied to the 4-20 mA analog input used to represent P044 [Maximum Freq].
Analog inversion can be accomplished by setting this value smaller than t095 [Anlg In4-20mA Lo].

Values	Default:	100.0%
	Min/Max:	0.0/200.0%
	Display:	0.1%

t097 [Anlg In mA Loss] Related Parameter(s): P043, P044, A426, A427

Sets the response to a loss of input. When the 4-20mA input is used for any reference, any input less than 2 mA is reported as a signal loss. Input must exceed 3 mA for the signal loss condition to end.
If enabled, this function affects any input that is being used as a speed reference or PID reference or PID setpoint in the drive.

Options	0	"Disabled" (Default)
	1	"Fault (F29)"
	2	"Stop"
	3	"Zero Ref"
	4	"Min Freq Ref"
	5	"Max Freq Ref"
	6	"Key Freq Ref"
	7	"MOP Freq Ref"
	8	"Continu Last"

Terminal Block Group *(continued)*

t098 [Anlg Loss Delay] Related Parameter(s): t094, t097

Sets the length of time after power-up during which the drive detects no analog signal loss.
Response to an analog signal loss is set in t094 or t097 [Analog In x Loss].

Values	Default:	0.0 s
	Min/Max:	0.0 /20.0 s
	Display:	0.1 s

t099 [Analog In Filter]

Sets the level of additional filtering of the analog input signals. A higher number increases filtering and decreases bandwidth. Each setting doubles the applied filtering (1 = 2x filter, 2 = 4x filter, and so on).

Values	Default:	0
	Min/Max:	0/14
	Display:	1

t100 [Sleep-Wake Sel] Related Parameter(s): t101, t102, t103

Drive "sleeps" if the appropriate analog input drops below the set t101 [Sleep Level] for the time set in t102 [Sleep Time] and the drive is running. When entering sleep mode the drive ramps to zero and the run indicator on the keypad display flashes to indicate the drive is in "sleep" mode.
When the appropriate analog input rises above the set [Wake Level], the drive "wakes" and ramps to the commanded frequency.
Inversion can be accomplished by setting [Sleep Level] to a higher setting than t103 [Wake Level].

ATTENTION: Enabling the Sleep-Wake function can cause unexpected machine operation during the Wake mode. Equipment damage and/or personal injury can result if this parameter is used in an inappropriate application. In addition, all applicable local, national and international codes, standards, regulations or industry guidelines must be considered.

Options	0	"Disabled" (Default)	
	1	"0-10V Input"	Sleep enabled from 0-10V Analog Input 1
	2	"4-20mA Input"	Sleep enabled from 4-20 mA Analog Input 2
	3	"Command Freq"	Sleep enabled based on drive commanded frequency

t101 [Sleep Level]

Sets the analog input level the drive must reach to enter sleep mode.

Values	Default:	10.0%
	Min/Max:	0.0/100.0%
	Display:	0.1%

t102 [Sleep Time]

Sets the analog input time the drive must stay below to enter sleep mode.

Values	Default:	0.0 s
	Min/Max:	0.0/600.0 s
	Display:	0.1 s

t103 [Wake Level]

Sets the analog input level the drive must reach to wake from sleep mode.

Values	Default:	15.0%
	Min/Max:	0.0/100.0%
	Display:	0.1%

Terminal Block Group *(continued)*

t104 [Wake Time]

Sets the analog input time the drive must stay above to wake from sleep mode.

Values	Default:	0.0 s
	Min/Max:	0.0/600.0 s
	Display:	0.1 s

t105 [Safety Open En]

PF 525 PowerFlex 525 only.

Sets the action when both safety inputs (Safety 1 and Safety 2) are disabled (de-energized – no power is applied).

Options	0	"FaultEnable" (Default)
	1	"FaultDisable"

t106 [SafetyFlt RstCfg]

PF 525 PowerFlex 525 only.

(With FRN 5.xxx and later.)

Sets the method of resetting fault F111 "Safety Hardware" either by means of a power cycle or fault clear operation.

Options	0	"PwrCycleRset" (Default)	Reset fault F111 using power cycle.
	1	"FltClr Reset"	Reset fault F111 using fault clear mechanism without power cycle.

Communications Group

C121 [Comm Write Mode]

Saves parameter values in active drive memory (RAM) or in drive non-volatile memory (EEPROM).

ATTENTION: If Automatic Drive Configuration (ADC) is used, this parameter must remain at its default value of 0 “Save”.

IMPORTANT Parameter values set prior to setting 1 “RAM only” are saved in RAM.

Options	0	“Save” (Default)
	1	“RAM only”

C122 [Cmd Stat Select]

PF 525 PowerFlex 525 only.

Selects velocity-specific or position/fibers-specific Command and Status Word bit definitions for use over a communication network. See Writing (06) Logic Command Data on page 203 for more information. This parameter cannot be changed when an I/O connection is established through the communication adapter or the drive’s embedded EtherNet/IP port.

Options	0	“Velocity” (Default)
	1	“Position”

C123 [RS485 Data Rate]

Sets the communications baud rate (bits/second) for the RS485 port. A reset or power cycle is required after selection is made.

Options	0	“1200”
	1	“2400”
	2	“4800”
	3	“9600” (Default)
	4	“19,200”
	5	“38,400”

C124 [RS485 Node Addr]

Sets the Modbus drive node number (address) for the RS485 port if using a network connection. A reset or power cycle is required after selection is made.

Values	Default:	100
	Min/Max:	1/247
	Display:	1

C125 [Comm Loss Action] Related Parameter(s): P045

Sets the drive's response to a loss of connection or excessive communication errors on the RS485 port.

Options	0	“Fault” (Default)	
	1	“Coast Stop”	Stops drive using “Coast to stop”.
	2	“Stop”	Stops drive using P045 [Stop Mode] setting.
	3	“Continu Last”	Drive continues operating at communication commanded speed saved in RAM.

C126 [Comm Loss Time] Related Parameter(s): C125

Sets the time that the drive remains in communication loss with the RS485 port before taking the action specified in C125 [Comm Loss Action]. See Appendix C for more information.

IMPORTANT This setting is effective only if I/O that controls the drive is transmitted through the RS485 port.

Values	Default:	5.0 s
	Min/Max:	0.1/60.0 s
	Display:	0.1 s

Communications Group *(continued)*

C127 [RS485 Format]

Determines the details related to the specific Modbus protocol used by the drive. A reset or power cycle is required after selection is made.

Options	0	"RTU 8-N-1" (Default)
	1	"RTU 8-E-1"
	2	"RTU 8-O-1"
	3	"RTU 8-N-2"
	4	"RTU 8-E-2"
	5	"RTU 8-O-2"

C128 [EN Addr Sel]

Related Parameter(s): C129-C132, C133-C136, C137-C140

PF 525 PowerFlex 525 only.

Enables the IP address, subnet mask and gateway address to be set with a BOOTP server. Identifies the connections that would be attempted on a reset or power cycle. A reset or power cycle is required after selection is made.

Options	1	"Parameters"
	2	"BOOTP" (Default)

C129 [EN IP Addr Cfg 1]
C130 [EN IP Addr Cfg 2]
C131 [EN IP Addr Cfg 3]
C132 [EN IP Addr Cfg 4]

Related Parameter(s): C128

PF 525 PowerFlex 525 only.

Sets the bytes in the IP address. A reset or power cycle is required after selection is made.

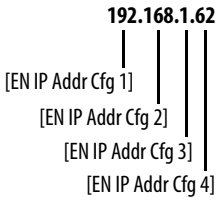

IMPORTANT C128 [EN Addr Sel] must be set to 1 "Parameters".

Values	Default:	0
	Min/Max:	0/255
	Display:	1

Communications Group *(continued)*

C133 [EN Subnet Cfg 1]
C134 [EN Subnet Cfg 2]
C135 [EN Subnet Cfg 3]
C136 [EN Subnet Cfg 4]

Related Parameter(s): C128

PF 525 PowerFlex 525 only.

Sets the bytes of the subnet mask. A reset or power cycle is required after selection is made.

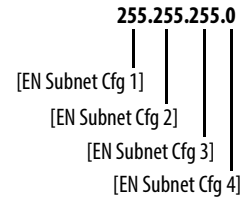

IMPORTANT C128 [EN Addr Sel] must be set to 1 "Parameters".

Values	Default:	0
	Min/Max:	0/255
	Display:	1

C137 [EN Gateway Cfg 1]
C138 [EN Gateway Cfg 2]
C139 [EN Gateway Cfg 3]
C140 [EN Gateway Cfg 4]

Related Parameter(s): C128

PF 525 PowerFlex 525 only.

Sets the bytes of the gateway address. A reset or power cycle is required after selection is made.

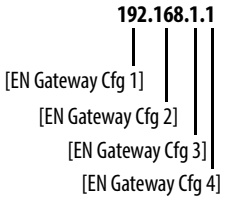

IMPORTANT C128 [EN Addr Sel] must be set to 1 "Parameters".

Values	Default:	0
	Min/Max:	0/255
	Display:	1

C141 [EN Rate Cfg]

PF 525 PowerFlex 525 only.

Sets the network data rate at which EtherNet/IP communicates. A reset or power cycle is required after selection is made.

Options	0	"Auto detect" (Default)
	1	"10Mbps Full"
	2	"10Mbps Half"
	3	"100Mbps Full"
	4	"100Mbps Half"

Communications Group *(continued)*

C143 [EN Comm Flt Actn] Related Parameter(s): P045, C145, C146, C147-C150

PF 525 PowerFlex 525 only.

Sets the action that the EtherNet/IP interface and drive takes if the EtherNet/IP interface detects that Ethernet communications have been disrupted.

IMPORTANT This setting is effective only if I/O that controls the drive is transmitted through the EtherNet/IP interface.

ATTENTION: Risk of injury or equipment damage exists. Parameter C143 [EN Comm Flt Actn] lets you determine the action of the EtherNet/IP interface and connected drive if communications are disrupted. By default, this parameter faults the drive. You can set this parameter so that the drive continues to run. Precautions should be taken to ensure that the setting of this parameter does not create a risk of injury or equipment damage. When commissioning the drive, verify that your system responds correctly to various situations (for example, a disconnected drive).

Options	0	"Fault" (Default)	
	1	"Stop"	Drive stops per P045 [Stop Mode] setting.
	2	"Zero Data"	Note: The Reference and Datalink values transmitted to the drive will be set to "0".
	3	"Hold Last"	Note: The Logic Command, Reference, and Datalink values transmitted to the drive will be held at their last value.
	4	"Send Flt Cfg"	Note: The Logic Command, Reference, and Datalink values will be transmitted to the drive as configured in C145, C146, and C147...C150.

C144 [EN Idle Flt Actn] Related Parameter(s): P045, C145, C146, C147-C150

PF 525 PowerFlex 525 only.

Sets the action that the EtherNet/IP interface and drive takes if the EtherNet/IP interface detects that the scanner is idle because the controller was switched to program mode.

ATTENTION: Risk of injury or equipment damage exists. Parameter C144 [EN Idle Flt Actn] lets you determine the action of the EtherNet/IP interface and connected drive if the scanner is idle. By default, this parameter faults the drive. you can set this parameter so that the drive continues to run. Precautions should be taken to ensure that the setting of this parameter does not create a risk of injury or equipment damage. When commissioning the drive, verify that your system responds correctly to various situations (for example, a disconnected drive).

Options	0	"Fault" (Default)	
	1	"Stop"	Drive stops per P045 [Stop Mode] setting.
	2	"Zero Data"	Note: The Reference and Datalink values transmitted to the drive will be set to "0".
	3	"Hold Last"	Note: The Logic Command, Reference, and Datalink values transmitted to the drive will be held at their last value.
	4	"Send Flt Cfg"	Note: The Logic Command, Reference, and Datalink values will be transmitted to the drive as configured in C145, C146, and C147...C150.

C145 [EN Flt Cfg Logic] Related Parameter(s): C143, C144

32 32 bit parameter.

PF 525 PowerFlex 525 only.

Sets the Logic Command data that is sent to the drive if any of the following is true:

– C143 [EN Comm Flt Actn] is set to 4 "Send Flt Cfg" and communications are disrupted.

– C144 [EN Idle Flt Actn] is set to 4 "Send Flt Cfg" and the scanner is put into Program or Test mode.

See Writing (06) Logic Command Data on page 203 for more information.

Values	Default:	0000
	Min/Max:	0000/FFFF
	Display:	0000

Communications Group *(continued)*

C146 [EN Flt Cfg Ref]

Related Parameter(s): C143, C144

32 32 bit parameter.

PF 525 PowerFlex 525 only.

Sets the Reference data that is sent to the drive if any of the following is true:
– C143 [EN Comm Flt Actn] is set to 4 "Send Flt Cfg" and communications are disrupted.
– C144 [EN Idle Flt Actn] is set to 4 "Send Flt Cfg" and the scanner is put into Program or Test mode.

Values	Default:	0
	Min/Max:	0/50000
	Display:	1

C147 [EN Flt Cfg DL 1]
C148 [EN Flt Cfg DL 2]
C149 [EN Flt Cfg DL 3]
C150 [EN Flt Cfg DL 4]

PF 525 PowerFlex 525 only.

Sets the Ethernet Datalink Input data that is sent to the drive if any of the following is true:
– C143 [EN Comm Flt Actn] is set to 4 "Send Flt Cfg" and communications are disrupted.
– C144 [EN Idle Flt Actn] is set to 4 "Send Flt Cfg" and the scanner is put into Program or Test mode.

Values	Default:	0
	Min/Max:	0/65535
	Display:	1

C153 [EN Data In 1]
C154 [EN Data In 2]
C155 [EN Data In 3]
C156 [EN Data In 4]

PF 525 PowerFlex 525 only.

Datalink parameter number whose value is written from the embedded EtherNet/IP data table. This parameter cannot be changed when an I/O connection is established through the drive's embedded EtherNet/IP port.

Values	Default:	0
	Min/Max:	0/800
	Display:	1

C157 [EN Data Out 1]
C158 [EN Data Out 2]
C159 [EN Data Out 3]
C160 [EN Data Out 4]

PF 525 PowerFlex 525 only.

Datalink parameter number whose value is read from the embedded EtherNet/IP data table. This parameter cannot be changed when an I/O connection is established through the drive's embedded EtherNet/IP port.

Values	Default:	0
	Min/Max:	0/800
	Display:	1

Communications Group *(continued)*

C161 [Opt Data In 1]
C162 [Opt Data In 2]
C163 [Opt Data In 3]
C164 [Opt Data In 4]

Datalink parameter number whose value is written from the High Speed Drive Serial Interface (HSDSI) data table. This parameter cannot be changed when an I/O connection is established through the communication adapter.

Values	Default:	0
	Min/Max:	0/800
	Display:	1

C165 [Opt Data Out 1]
C166 [Opt Data Out 2]
C167 [Opt Data Out 3]
C168 [Opt Data Out 4]

Datalink parameter number whose value is read from the HSDSI data table. This parameter cannot be changed when an I/O connection is established through the communication adapter.

Values	Default:	0
	Min/Max:	0/800
	Display:	1

C169 [MultiDrv Sel]

Sets the configuration of the drive that is in multi-drive mode. A reset or power cycle is required after selection is made.

Options	0	"Disabled" (Default)	No multi-drive master from the internal network option module or embedded Ethernet port. The drive can still function as a multi-drive slave or as a single drive (no multi-drive used).
	1	"Network Opt"	Multi-drive is enabled with the internal network option as a multi-drive master. The host drive is "Drive 0" and up to four slave drives can be daisy-chained from its RS485 port.
	2	"EtherNet/IP"(1)	Multi-drive is enabled with the embedded Ethernet port as the multi-drive master. The host drive is "Drive 0" and up to four slave drives can be daisy-chained from its RS485 port.

(1) Setting is specific to PowerFlex 525 drives only.

C171 [Drv 1 Addr]
C172 [Drv 2 Addr]
C173 [Drv 3 Addr]
C174 [Drv 4 Addr]

Related Parameter(s): C169

Sets the corresponding node addresses of the daisy-chained drives when C169 [MultiDrv Sel] is set to 1 "Network Opt" or 2 "EtherNet/IP". A reset or power cycle is required after selection is made.

Values	Default: Drv 1 Addr: Drv 2 Addr: Drv 3 Addr: Drv 4 Addr:	 2 3 4 5
	Min/Max:	1/247
	Display:	1

C175 [DSI I/O Cfg]

Sets the configuration of the Drives that are active in the multi-drive mode. Identifies the connections that would be attempted on a reset or power cycle. A reset or power cycle is required after selection is made.

Options	0	"Drive 0" (Default)
	1	"Drive 0-1"
	2	"Drive 0-2"
	3	"Drive 0-3"
	4	"Drive 0-4"

Logic Group

L180 [Stp Logic 0] **L181 [Stp Logic 1]**
L182 [Stp Logic 2] **L183 [Stp Logic 3]**
L184 [Stp Logic 4] **L185 [Stp Logic 5]**
L186 [Stp Logic 6] **L187 [Stp Logic 7]**

Related Parameter(s):

Stop drive before changing this parameter.

PF 525 PowerFlex 525 only.

Values		
	Default:	00F1
	Min/Max:	0000/FAFF
	Display	0001

See Appendix D and Appendix E for more information on applying Step Logic and Position StepLogic.

Parameters L180...L187 are only active if P047, P049, or P051 [Speed Referencex] is set to 13 "Step Logic" or 16 "Positioning". These parameters can be used to create a custom profile of frequency commands. Each "step" can be based on time, status of a Logic input or a combination of time and the status of a Logic input.

Digits 1...4 for each [Stp Logic x] parameter must be programmed according to the desired profile. A Logic input is established by setting a digital input, parameters t062, t063, t065...t068 [DigIn TermBlk xx] to 24 "Logic In 1" and/or 25 "Logic In 2" or by using Bits 6 and 7 of A560 [Enh Control Word].

A time interval between steps can be programmed using parameters L190...L197 [Stp Logic Time x]. See the table below for related parameters.

The speed for any step is programmed using parameters A410...A417 [Preset Freq x].

Step	StepLogic Parameter	Related Preset Frequency Parameter (Can be activated independent of StepLogic Parameters)	Related StepLogic Time Parameter (Active when L180...L187 Digit 1 or 2 are set to 1, b, C, d or E)
0	L180 [Stp Logic 0]	A410 [Preset Freq 0]	L190 [Stp Logic Time 0]
1	L181 [Stp Logic 1]	A411 [Preset Freq 1]	L191 [Stp Logic Time 1]
2	L182 [Stp Logic 2]	A412 [Preset Freq 2]	L192 [Stp Logic Time 2]
3	L183 [Stp Logic 3]	A413 [Preset Freq 3]	L193 [Stp Logic Time 3]
4	L184 [Stp Logic 4]	A414 [Preset Freq 4]	L194 [Stp Logic Time 4]
5	L185 [Stp Logic 5]	A415 [Preset Freq 5]	L195 [Stp Logic Time 5]
6	L186 [Stp Logic 6]	A416 [Preset Freq 6]	L196 [Stp Logic Time 6]
7	L187 [Stp Logic 7]	A417 [Preset Freq 7]	L197 [Stp Logic Time 7]

The position for any step is programmed using parameters L200...L214 [Step Units x].

Step	StepLogic Position Parameter
0	L200 [Step Units 0] & L201 [Step Units F 0]
1	L202 [Step Units 1] & L203 [Step Units F 1]
2	L204 [Step Units 2] & L205 [Step Units F 2]
3	L206 [Step Units 3] & L207 [Step Units F 3]
4	L208 [Step Units 4] & L209 [Step Units F 4]
5	L210 [Step Units 5] & L211 [Step Units F 5]
6	L212 [Step Units 6] & L213 [Step Units F 6]
7	L214 [Step Units 7] & L215 [Step Units F 7]

How StepLogic Works

The StepLogic sequence begins with a valid start command. A normal sequence always begins with L180 [Stp Logic 0].

Digit 1: Logic for next step

This digit defines the logic for the next step. When the condition is met the program advances to the next step. Step 0 follows Step 7. Example: Digit 1 is set to 3. When "Logic In 2" becomes active, the program advances to the next step.

Digit 2: Logic to jump to a different step

For all settings other than F, when the condition is met, the program overrides Digit 0 and jumps to the step defined by Digit 3.

Digit 3: Different step to jump

When the condition for Digit 2 is met, this digit setting determines the next step or to end the program.

Digit 4: Step settings

This digit defines additional characteristics of each step.

Any StepLogic parameter can be programmed to control a relay or opto output, but you can not control different outputs based on the condition of different StepLogic commands.

StepLogic Settings

The logic for each function is determined by the four digits for each StepLogic parameter. The following is a listing of the available settings for each digit. See Appendix D for more information.

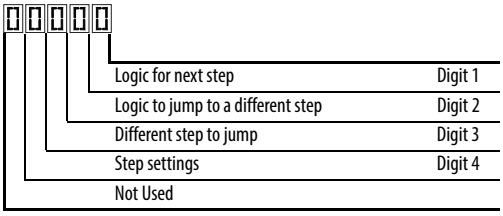

Velocity Control Settings (Digit 4)

Required Setting	Accel/Decel Param. Used	StepLogic Output State	Commanded Direction
0	Accel/Decel 1	Off	FWD
1	Accel/Decel 1	Off	REV
2	Accel/Decel 1	Off	No Output
3	Accel/Decel 1	On	FWD
4	Accel/Decel 1	On	REV
5	Accel/Decel 1	On	No Output
6	Accel/Decel 2	Off	FWD
7	Accel/Decel 2	Off	REV
8	Accel/Decel 2	Off	No Output
9	Accel/Decel 2	On	FWD
A	Accel/Decel 2	On	REV
b	Accel/Decel 2	On	No Output

Positioning Settings (Digit 4)

Required Setting	Accel/Decel Param. Used	StepLogic Output State	Direction From Home	Type of Command
0	Accel/Decel 1	Off	FWD	Absolute
1	Accel/Decel 1	Off	FWD	Incremental
2	Accel/Decel 1	Off	REV	Absolute
3	Accel/Decel 1	Off	REV	Incremental
4	Accel/Decel 1	On	FWD	Absolute
5	Accel/Decel 1	On	FWD	Incremental
6	Accel/Decel 1	On	REV	Absolute
7	Accel/Decel 1	On	REV	Incremental
8	Accel/Decel 2	Off	FWD	Absolute
9	Accel/Decel 2	Off	FWD	Incremental
A	Accel/Decel 2	Off	REV	Absolute
b	Accel/Decel 2	Off	REV	Incremental
C	Accel/Decel 2	On	FWD	Absolute
d	Accel/Decel 2	On	FWD	Incremental
E	Accel/Decel 2	On	REV	Absolute
F	Accel/Decel 2	On	REV	Incremental

Settings (Digit 3)

Setting	Description
0	Jump to Step 0
1	Jump to Step 1
2	Jump to Step 2
3	Jump to Step 3
4	Jump to Step 4
5	Jump to Step 5
6	Jump to Step 6
7	Jump to Step 7
8	End Program (Normal Stop)
9	End Program (Coast to Stop)
A	End Program and Fault (F2)

Settings (Digit 2 and 1)

Setting	Description
0	Skip Step (Jump Immediately)
1	Step Based on [Stp Logic Time x]
2	Step if “Logic In 1” is Active
3	Step if “Logic In 2” is Active
4	Step if “Logic In 1” is Not Active
5	Step if “Logic In 2” is Not Active
6	Step if either “Logic In 1” or “Logic In 2” is Active
7	Step if both “Logic In 1” and “Logic In 2” are Active
8	Step if neither “Logic In 1” nor “Logic In 2” is Active
9	Step if “Logic In 1” is Active and “Logic In 2” is Not Active
A	Step if “Logic In 2” is Active and “Logic In 1” is Not Active
b	Step after [Stp Logic Time x] and “Logic In 1” is Active
C	Step after [Stp Logic Time x] and “Logic In 2” is Active
d	Step after [Stp Logic Time x] and “Logic In 1” is Not Active
E	Step after [Stp Logic Time x] and “Logic In 2” is Not Active
F	Do Not Step/Ignore Digit 2 Settings

Logic Group *(continued)*

L190 [Stp Logic Time 0] **L191 [Stp Logic Time 1]**
L192 [Stp Logic Time 2] **L193 [Stp Logic Time 3]**
L194 [Stp Logic Time 4] **L195 [Stp Logic Time 5]**
L196 [Stp Logic Time 6] **L197 [Stp Logic Time 7]**

PF 525 PowerFlex 525 only.

Sets the time to remain in each step if the corresponding command word is set to "Step based on time".

Values	Default:	30.0 s
	Min/Max:	0.0/999.9 s
	Display:	0.1 s

L200 [Step Units 0] **L202 [Step Units 1]**
L204 [Step Units 2] **L206 [Step Units 3]**
L208 [Step Units 4] **L210 [Step Units 5]**
L212 [Step Units 6] **L214 [Step Units 7]**

32 32 bit parameter.

PF 525 PowerFlex 525 only.

Sets the position in user-defined units the drive must reach at each step.

Values	Default:	0.00
	Min/Max:	0.00/6400.00
	Display:	0.01

Advanced Display Group

d360 [Analog In 0-10V] Related Parameter(s): t091, t092

Displays the 0-10V analog input as a percent of full scale.

Values	Default:	Read Only
	Min/Max:	0.0/100.0%
	Display:	0.1%

d361 [Analog In 4-20mA] Related Parameter(s): t095, t096

Displays the 4-20 mA analog input as a percent of full scale.

Values	Default:	Read Only
	Min/Max:	0.0/100.0%
	Display:	0.1%

d362 [Elapsed Time-hr] Related Parameter(s): A555

Displays the total elapsed powered-up time (in hours) since timer reset. The timer stops when it reaches the maximum value.

Values	Default:	Read Only
	Min/Max:	0/32767 hr
	Display:	1 hr

d363 [Elapsed Time-min] Related Parameter(s): d362, A555

Displays the total elapsed powered-up time (in minutes) since timer reset. Resets to zero when maximum value is reached and increments d362 [Elapsed Time-hr] by one.

Values	Default:	Read Only
	Min/Max:	0.0/60.0 min
	Display:	0.1 min

d364 [Counter Status]

Displays the current value of the counter if enabled.

Values	Default:	Read Only
	Min/Max:	0/65535
	Display:	1

d365 [Timer Status]

32 32 bit parameter.

Displays the current value of the timer if enabled.

Values	Default:	Read Only
	Min/Max:	0.0/9999.0 s
	Display:	0.1 s

d367 [Drive Type]

Displays the Drive type setting. Used by Rockwell Automation field service personnel (not write accessible by non Rockwell Automation technical personnel).

Values	Default:	Read Only
	Min/Max:	0/65535
	Display:	1

Advanced Display Group *(continued)*

d368 [Testpoint Data] Related Parameter(s): A483

Displays the present value of the function selected in A483 [Testpoint Sel].

Values	Default:	Read Only
	Min/Max:	0/FFFF
	Display:	1

d369 [Motor OL Level]

Displays the motor overload counter.

Values	Default:	Read Only
	Min/Max:	0.0/150.0%
	Display:	0.1%

d375 [Slip Hz Meter] Related Parameter(s): P032

Displays the current amount of slip or droop (absolute value) being applied to the motor frequency. Drives applies slip based on the setting for P032 [Motor NP Hertz].

Values	Default:	Read Only
	Min/Max:	0.0/25.0 Hz
	Display:	0.1 Hz

d376 [Speed Feedback]

32 bit parameter.

Displays the value of the actual motor speed whether measured by encoder/pulse train feedback or estimated.

Values	Default:	Read Only
	Min/Max:	0.0/64000.0 rpm
	Display:	0.1 rpm

d378 [Encoder Speed]

32 bit parameter.

Provides a monitoring point that reflects the speed measured from the feedback device. This shows the encoder or pulse train speed even if not used directly to control motor speed.(1)

Values	Default:	Read Only
	Min/Max:	0.0/64000.0 rpm
	Display:	0.1 rpm

(1) Parameter is also available in PowerFlex 523 FRN 3.xxx and later.

d380 [DC Bus Ripple]

Displays the real-time value of the DC bus ripple voltage.

Values	Default:	Read Only
	Min/Max:	0/410VDC for 230V AC drives; 820VDC for 460VAC drives; 1025VDC for 600VAC drives
	Display:	1V DC

d381 [Output Powr Fctr]

Displays the angle in electrical degrees between motor voltage and motor current.

Values	Default:	Read Only
	Min/Max:	0.0/180.0 deg
	Display:	0.1 deg

Advanced Display Group *(continued)*

d382 [Torque Current]

Displays the current value of the motor torque current measured by the drive.

Values	Default:	Read Only
	Min/Max:	0.00/(Drive Rated Amps x 2)
	Display:	0.01 A

d383 [PID1 Fdbk Displ]

d385 [PID2 Fdbk Displ]

PF 525 PowerFlex 525 only.

Displays the active PID Feedback value.

Values	Default:	Read Only
	Min/Max:	0.0/100.0%
	Display:	0.1%

d384 [PID1 Setpnt Disp]

d386 [PID2 Setpnt Disp]

PF 525 PowerFlex 525 only.

Displays the active PID Setpoint value.

Values	Default:	Read Only
	Min/Max:	0.0/100.0%
	Display:	0.1%

d387 [Position Status]

PF 525 PowerFlex 525 only.

Displays the present operating condition of the drive. When in Positioning mode, Bit 1 indicates positive or negative position in relation to Home.

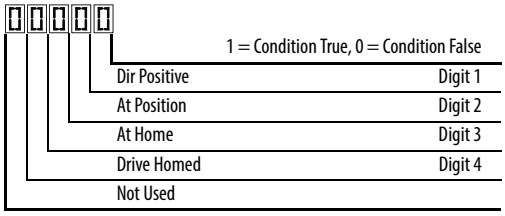

Values	Default:	Read Only
	Min/Max:	0000/1111
	Display:	0000

d388 [Units Traveled H] Related Parameter(s): d387

Stop drive before changing this parameter.

32 bit parameter.

PF 525 PowerFlex 525 only.

Displays the number of user-defined units traveled from the home position. See d387 [Position Status] for direction of travel.

Values	Default:	Read Only
	Min/Max:	0/64000
	Display:	1

Advanced Display Group *(continued)*

d389 [Units Traveled L] Related Parameter(s): d387

Stop drive before changing this parameter.

PF 525 PowerFlex 525 only.

Displays the number of user-defined units traveled from the home position. See d387 [Position Status] for direction of travel.

Values	Default:	Read Only
	Min/Max:	0.00/0.99
	Display:	0.01

d390 [Fiber Status]

Present status of the Fibers features.

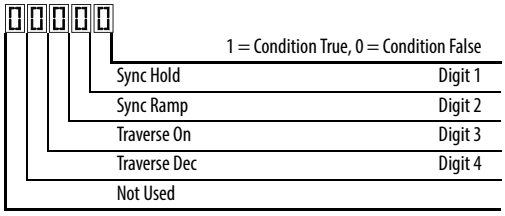

Values	Default:	Read Only
	Min/Max:	0000/1111
	Display:	0000

d391 [Stp Logic Status] Related Parameter(s): P047, L180-L187

PF 525 PowerFlex 525 only.

Displays the current step of the Step Logic profile as defined by parameters L180...L187 [Step Logic x] when P047 [Speed Reference1] is set to 13 “Step Logic” or 16 “Positioning”.

Values	Default:	Read Only
	Min/Max:	0/8
	Display:	1

d392 [RdyBit Mode Act] Related Parameter(s): A574

(With PowerFlex 525 FRN 3.xxx and later.)
(With PowerFlex 523 FRN 3.xxx and later.)

Displays the value of A574 [RdyBit Mode Cfg].

Values	Default:	Read Only
	Min/Max:	0/1
	Display:	1

Advanced Display Group *(continued)*

d393 [Drive Status 2]

(With PowerFlex 525 FRN 5.xxx and later.)
(With PowerFlex 523 FRN 3.xxx and later.)

Displays the present operating condition of the drive.

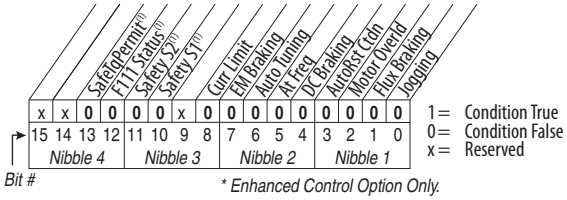

(1) Bit status is specific to PowerFlex 525 drives only.

Values		
	Default:	Read Only
	Min/Max:	0/65535
	Display:	1

d394 [Dig Out Status]

(With PowerFlex 525 FRN 5.xxx and later.)
(With PowerFlex 523 FRN 3.xxx and later.)

Displays relay output and opto output status.

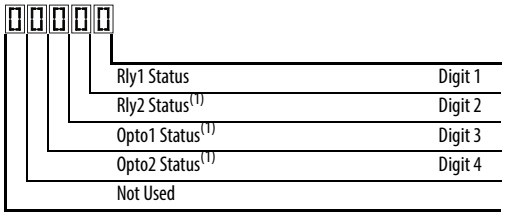

Status	Bit Value = 0	Bit Value = 1
Relay 1 status (Normally Open)	Not activated (Relay 1 open)	Activated (Relay 1 closed)
Relay 2 status (Normally Closed)	Not activated (Relay 2 closed)	Activated (Relay 2 open)
Opto 1 status	Not activated	Activated
Opto 2 status	Not activated	Activated

(1) Setting is specific to PowerFlex 525 drives only.

Values		
	Default:	Read Only
	Min/Max:	0/15
	Display:	1

Advanced Program Group

A410	**[Preset Freq 0]**	**A411**	**[Preset Freq 1]**
A412	**[Preset Freq 2]**	**A413**	**[Preset Freq 3]**
A414	**[Preset Freq 4]**	**A415**	**[Preset Freq 5]**
A416	**[Preset Freq 6]**	**A417**	**[Preset Freq 7]**
A418	**[Preset Freq 8]**	**A419**	**[Preset Freq 9]**
A420	**[Preset Freq 10]**	**A421**	**[Preset Freq 11]**
A422	**[Preset Freq 12]**	**A423**	**[Preset Freq 13]**
A424	**[Preset Freq 14]**	**A425**	**[Preset Freq 15]**

PF 525 PowerFlex 525 only.

Sets the frequency of the drive outputs to the programmed value when selected.

For PowerFlex 525

	Default Accel/Decel Used	Preset Input 1 (DigIn TermBlk 05)	Preset Input 2 (DigIn TermBlk 06)	Preset Input 3 (DigIn TermBlk 07)	Preset Input 4 (DigIn TermBlk 08)
Preset Setting 0[1]	1	0	0	0	0
Preset Setting 1	1	1	0	0	0
Preset Setting 2	2	0	1	0	0
Preset Setting 3	2	1	1	0	0
Preset Setting 4	1	0	0	1	0
Preset Setting 5	1	1	0	1	0
Preset Setting 6	2	0	1	1	0
Preset Setting 7	2	1	1	1	0
Preset Setting 8	1	0	0	0	1
Preset Setting 9	1	1	0	0	1
Preset Setting 10	2	0	1	0	1
Preset Setting 11	2	1	1	0	1
Preset Setting 12	1	0	0	1	1
Preset Setting 13	1	1	0	1	1
Preset Setting 14	2	0	1	1	1
Preset Setting 15	2	1	1	1	1

For PowerFlex 523

	Default Accel/Decel Used	Preset Input 1 (DigIn TermBlk 05)	Preset Input 2 (DigIn TermBlk 06)	Preset Input 3 (DigIn TermBlk 03)	–
Preset Setting 0[1]	1	0	0	0	–
Preset Setting 1	1	1	0	0	
Preset Setting 2	2	0	1	0	
Preset Setting 3	2	1	1	0	
Preset Setting 4	1	0	0	1	
Preset Setting 5	1	1	0	1	
Preset Setting 6	2	0	1	1	
Preset Setting 7	2	1	1	1	

(1) Preset Setting 0 is only available if P047, P049 or P051 [Speed Referencex] is set to 7 “Preset Freq”.

Values	Defaults:	
	Preset Freq 0:	0.00 Hz
	Preset Freq 1:	5.00 Hz
	Preset Freq 2:	10.00 HZ
	Preset Freq 3:	20.00 Hz
	Preset Freq 4:	30.00 Hz
	Preset Freq 5:	40.00 Hz
	Preset Freq 6:	50.00 Hz
	Preset Freq 7...15:	60.00 Hz
	Min/Max:	0.00/500.00 Hz
	Display:	0.01 Hz

Advanced Program Group *(continued)*

A426 [Keypad Freq] Related Parameter(s): P047, P049, P051

Provides the drive frequency command using the built-in keypad navigation. When P047, P049 or P051 [Speed Referencex] selects 2 "Keypad Freq", the value set in this parameter controls the frequency of the drive. The value of this parameter can also be changed when navigating with the keypad by pressing the Up or Down arrow keys.

Values	Default:	60.00 Hz
	Min/Max:	0.00/500.00 Hz
	Display:	0.01 Hz

A427 [MOP Freq]

Provides the drive frequency command using the built-in Motor Operated Potentiometer (MOP).

IMPORTANT Frequency is not written to non-volatile storage until drive is powered-down. If both MOP Up and MOP Down are applied at the same time, the inputs are ignored and the frequency is unchanged.

Values	Default:	60.00 Hz
	Min/Max:	0.00/500.00 Hz
	Display:	0.01 Hz

A428 [MOP Reset Sel]

Determines if the current MOP reference command is saved on power down.

Options	0 "Zero MOP Ref"	Resets the MOP frequency to zero on power down and stop.
	1 "Save MOP Ref" (Default)	

A429 [MOP Preload]

Determines the operation of the MOP function.

Options	0 "No preload" (Default)	
	1 "Preload"	Bumpless Transfer: whenever MOP mode is selected, the current output value of the speed is loaded.

A430 [MOP Time]

Sets the rate of change of the MOP reference.

Values	Default:	10.0 s
	Min/Max:	0.1/600.0 s
	Display:	0.1 s

A431 [Jog Frequency] Related Parameter(s): P044

Sets the output frequency when a jog command is issued.

Values	Default:	10.00 Hz
	Min/Max:	0.00/[Maximum Freq]
	Display:	0.01 Hz

A432 [Jog Accel/Decel]

Sets the acceleration and deceleration time used when in jog mode.

Values	Default:	10.00 s
	Min/Max:	0.01/600.00 s
	Display:	0.01 s

Advanced Program Group *(continued)*

A433 [Purge Frequency] Related Parameter(s): t062, t063, t065-t068

Provides a fixed frequency command value when t062, t063, t065-t068 [DigIn TermBlk xx] is set to 40 "Purge".

Values	Default:	5.00 Hz
	Min/Max:	0.00/500.00 Hz
	Display:	0.01 Hz

A434 [DC Brake Time] Related Parameter(s): P045, A435

Sets the length of time that DC brake current is "injected" into the motor.

Values	Default:	0.0 s
	Min/Max:	0.0/99.9 s
	Display:	0.1 s

A435 [DC Brake Level] Related Parameter(s): P045

Defines the maximum DC brake current, in amps, applied to the motor when P045 [Stop Mode] is set to either 4 "Ramp" or 6 "DC Brake".

Ramp-to-Stop Mode

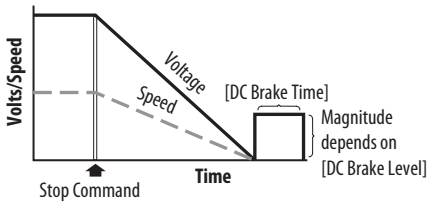

DC Injection Stop Mode

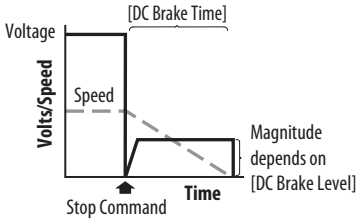

ATTENTION: If a hazard of injury due to movement of equipment or material exists, an auxiliary mechanical braking device must be used. This feature should not be used with synchronous motors. Motors may be demagnetized during braking.

Values	Default:	Drive Rated Amps x 0.05
	Min/Max:	0.00/(Drive Rated Amps x 1.80)
	Display:	0.01 A

A436 [DC Brk Time@Strt] Related Parameter(s): P045, A435

Sets the length of time that DC brake current is "injected" into the motor after a valid start command is received.

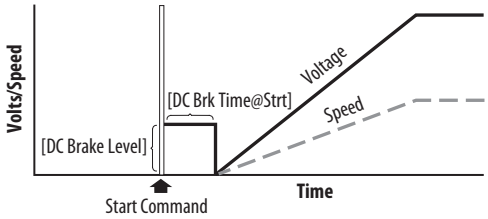

Values	Default:	0.0 s
	Min/Max:	0.0/99.9 s
	Display:	0.1 s

Advanced Program Group *(continued)*

A437 [DB Resistor Sel] Related Parameter(s): A438, A550

Stop drive before changing this parameter.

Enables/disables external dynamic braking and selects the level of resistor protection.

IMPORTANT When A437 [DB Resistor Sel] is set to a value greater than "0", the value set in parameter A550 [Bus Reg Enable] will not take effect.

Options	0	"Disabled" (Default)	
	1	"Norml RA Res"	5%
	2	"NoProtection"	100%
	3...99	"3...99% DutyCycle"	

A438 [DB Threshold] Related Parameter(s): A437

Sets the DC bus voltage threshold for Dynamic Brake operation. If DC bus voltage rises above this level, Dynamic Brake turns on. Lower values makes the dynamic braking function more responsive but may result in nuisance Dynamic Brake activation (IGBT can modulate continuously).

ATTENTION: Equipment damage may result if this parameter is set to a value that causes the dynamic braking resistor to dissipate excessive power. Parameter settings less than 100% should be carefully evaluated to ensure that the Dynamic Brake resistor's wattage rating is not exceeded. In general, values less than 90% are not needed. This parameter's setting is especially important if parameter A437 [DB Resistor Sel] is set to 2 "NoProtection".

Values	Default:	100.0%
	Min/Max:	10.0/110.0%
	Display:	0.1%

A439 [S Curve %]

Enables a fixed shape S-Curve that is applied to the acceleration and deceleration ramps (including jog).
S-Curve Time = (Accel or Decel Time) x (S-Curve Setting in percentage)

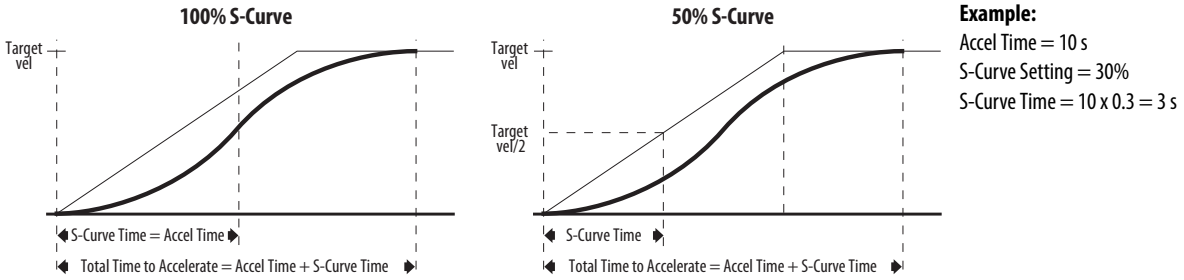

Example:
Accel Time = 10 s
S-Curve Setting = 30%
S-Curve Time = 10 x 0.3 = 3 s

Values	Default:	0%
	Min/Max:	0/100%
	Display:	1%

Advanced Program Group *(continued)*

A440 [PWM Frequency] Related Parameter(s): A540

Sets the carrier frequency for the PWM output waveform. The chart below provides derating guidelines based on the PWM frequency setting.

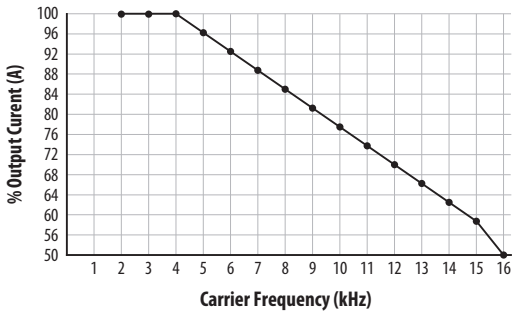

Note: If Vector mode (open loop) is selected and 16 kHz is selected, the drive will forcibly reduce the carrier frequency to 8 kHz.

IMPORTANT Ignoring derating guidelines can cause reduced drive performance. The drive may automatically reduce the PWM carrier frequency at low output speeds, unless prevented from doing so by A540 [Var PWM Disable].

Values	Default:	4.0 kHz
	Min/Max:	2.0/16.0 kHz
	Display:	0.1 kHz

A441 [Droop Hertz@ FLA]

PF 525 PowerFlex 525 only.

Reduces the frequency based on current. This frequency is subtracted from the commanded output frequency. Generally Slip and Droop would not both be used, but if both are enabled they simply subtract from each other. Typically used in load sharing schemes.

Values	Default:	0.0 Hz
	Min/Max:	0.0/10.0 Hz
	Display:	0.1 Hz

A442 [Accel Time 2] Related Parameter(s): P044

Time for the drive to ramp from 0.0 Hz to P044 [Maximum Freq] if Accel Time 2 is selected.
Accel Rate = [Maximum Freq] / [Accel Time]

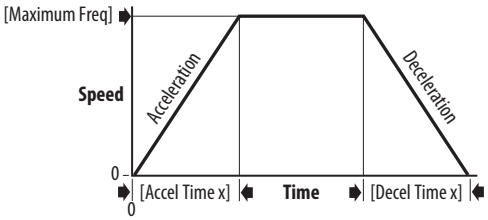

Values	Default:	10.00 s
	Min/Max:	0.00/600.00 s
	Display:	0.01 s

A443 [Decel Time 2] Related Parameter(s): P044

Time for the drive to ramp from P044 [Maximum Freq] to 0.0 Hz if Decel Time 2 is selected.
Decel Rate = [Maximum Freq] / [Decel Time]

Values	Default:	10.00 s
	Min/Max:	0.00/600.00 s
	Display:	0.01 s

Advanced Program Group *(continued)*

A444 [Accel Time 3]
A446 [Accel Time 4]

Sets the rate of acceleration for all speed increases when selected by digital inputs.

Values	Default:	10.00 s
	Min/Max:	0.00/600.00 s
	Display:	0.01 s

A445 [Decel Time 3]
A447 [Decel Time 4]

Sets the rate of deceleration for all speed decreases when selected by digital inputs.

Values	Default:	10.00 s
	Min/Max:	0.00/600.00 s
	Display:	0.01 s

A448 [Skip Frequency 1]
A450 [Skip Frequency 2]
A452 [Skip Frequency 3]
A454 [Skip Frequency 4]

PF 525 PowerFlex 525 only.

Related Parameter(s): A449, A451, A453, A455

Works in conjunction with A449, A451, A453 and A455 [Skip Freq Band x] creating a range of frequencies at which the drive does not operate continuously.

Values	Default:	0.0 Hz (Disabled)
	Min/Max:	0.0/500.0 Hz
	Display:	0.1 Hz

A449 [Skip Freq Band 1]
A451 [Skip Freq Band 2]
A453 [Skip Freq Band 3]
A455 [Skip Freq Band 4]

PF 525 PowerFlex 525 only.

Related Parameter(s): A448, A450, A452, A454

Determines the band around A448, A450, A452 and A454 [Skip Frequency x].

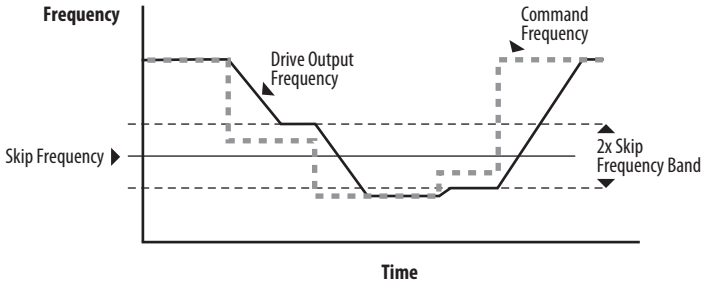

Values	Default:	0.0 Hz
	Min/Max:	0.0/30.0 Hz
	Display:	0.1 Hz

Advanced Program Group *(continued)*

A456 [PID 1 Trim Hi]

A468 [PID 2 Trim Hi]

PF 525 PowerFlex 525 only.

Scales the upper value of the trim frequency when trim is active.

Values	Default:	60.0 Hz
	Min/Max:	0.0/500.0 Hz
	Display:	0.1 Hz

A457 [PID 1 Trim Lo]

A469 [PID 2 Trim Lo]

PF 525 PowerFlex 525 only.

Scales the lower value of the trim frequency when trim is active.

Values	Default:	0.0 Hz
	Min/Max:	0.0/500.0 Hz
	Display:	0.1 Hz

A458 [PID 1 Trim Sel]

A470 [PID 2 Trim Sel]

PF 525 PowerFlex 525 only.

Stop drive before changing this parameter.

Sets the PID output as trim to the source reference.

Options	0	"Disabled" (Default)	PID Trim is disabled.
	1	"TrimOn Pot"	
	2	"TrimOn Keypd"	
	3	"TrimOn DSI"	
	4	"TrimOn NetOp"	
	5	"TrimOn 0-10V"	
	6	"TrimOn 4-20"	
	7	"TrimOn Prset"	
	8	"TrimOn AnMlt"(1)	
	9	"TrimOn MOP"	
	10	"TrimOn Pulse"	
	11	"TrimOn SIgic"(1)	
	12	"TrimOn Encdr"(1)	
	13	"TrimOn ENet"(1)	

(1) Setting is specific to PowerFlex 525 drives only.

Advanced Program Group *(continued)*

A459 [PID 1 Ref Sel]

A471 [PID 2 Ref Sel]

PF 525 PowerFlex 525 only.

Stop drive before changing this parameter.

Selects the source of the PID reference.

Options	0	"PID Setpoint" (Default)
	1	"Drive Pot"
	2	"Keypad Freq"
	3	"Serial/DSI"
	4	"Network Opt"
	5	"0-10V Input"
	6	"4-20mA Input"
	7	"Preset Freq"
	8	"AnlgIn Multi"(1)
	9	"MOP Freq"
	10	"Pulse Input"
	11	"Step Logic"(1)
	12	"Encoder"(1)
	13	"EtherNet/IP"(1)

(1) Setting is specific to PowerFlex 525 drives only.

A460 [PID 1 Fdback Sel]

A472 [PID 2 Fdback Sel]

PF 525 PowerFlex 525 only.

Selects the source of the PID feedback.

Options	0	"0-10V Input" (Default)	Note: PID does not function with bipolar input. Negative voltages are ignored and treated as zero.
	1	"4-20mA Input"	
	2	"Serial/DSI"	
	3	"Network Opt"	
	4	"Pulse Input"	
	5	"Encoder"(1)	
	6	"EtherNet/IP"(1)	

(1) Setting is specific to PowerFlex 525 drives only.

A461 [PID 1 Prop Gain]

Related Parameter(s): A459, A471

A473 [PID 2 Prop Gain]

PF 525 PowerFlex 525 only.

Sets the value for the PID proportional component when the PID mode is enabled.

Values	Default:	0.01
	Min/Max:	0.00/99.99
	Display:	0.01

Advanced Program Group *(continued)*

A462 [PID 1 Integ Time] Related Parameter(s): A459, A471

A474 [PID 2 Integ Time]
PF 525 PowerFlex 525 only.

Sets the value for the PID integral component when PID mode is enabled.

Values	Default:	2.0 s
	Min/Max:	0.0/999.9 s
	Display:	0.1 s

A463 [PID 1 Diff Rate] Related Parameter(s): A459, A471

A475 [PID 2 Diff Rate]
PF 525 PowerFlex 525 only.

Sets the value (in 1/second) for the PID differential component when PID mode is enabled.

Values	Default:	0.00
	Min/Max:	0.00/99.99
	Display:	0.01

A464 [PID 1 Setpoint] Related Parameter(s): A459, A471

A476 [PID 2 Setpoint]
PF 525 PowerFlex 525 only.

Provides an internal fixed value for process setpoint when PID mode is enabled.

Values	Default:	0.0%
	Min/Max:	0.0/100.0%
	Display:	0.1%

A465 [PID 1 Deadband]

A477 [PID 2 Deadband]
PF 525 PowerFlex 525 only.

Sets a range, in percent above and below the PID Reference, that the PID output will ignore.

Values	Default:	0.0%
	Min/Max:	0.0/10.0%
	Display:	0.1%

A466 [PID 1 Preload]

A478 [PID 2 Preload]
PF 525 PowerFlex 525 only.

Sets the value used to preload the integral component on start or enable.

Values	Default:	0.0 Hz
	Min/Max:	0.0/500.0 Hz
	Display:	0.1 Hz

A467 [PID 1 Invert Err]

A479 [PID 2 Invert Err]
PF 525 PowerFlex 525 only.

Changes the sign of the PID error.

Options	0	"Normal" (Default)
	1	"Inverted"

Advanced Program Group *(continued)*

A481 [Process Disp Lo] Related Parameter(s): b010, P043

Sets the value displayed in b010 [Process Display] when the drive is running at P043 [Minimum Freq].

Values	Default:	0.00
	Min/Max:	0.00/99.99
	Display:	0.01

A482 [Process Disp Hi] Related Parameter(s): b010, P044

Sets the value displayed in b010 [Process Display] when the drive is running at P044 [Maximum Freq].

Values	Default:	0.00
	Min/Max:	0.00/99.99
	Display:	0.01

A483 [Testpoint Sel]

Used by Rockwell Automation field service personnel.

Values	Default:	400
	Min/Max:	0/FFFF
	Display:	1

A484 [Current Limit 1] Related Parameter(s): P033

Maximum output current allowed before current limiting occurs.

Values	Default:	Drive Rated Amps x 1.1 (Normal Duty); Drive Rated Amps x 1.5 (Heavy Duty)
	Min/Max:	0.0/Drive Rated Amps x 1.5 (Normal Duty); Drive Rated Amps x 1.8 (Heavy Duty)
	Display:	0.1 A

A485 [Current Limit 2] Related Parameter(s): P033

PF 525 PowerFlex 525 only.

Maximum output current allowed before current limiting occurs.

Values	Default:	Drive Rated Amps x 1.1
	Min/Max:	0.0/Drive Rated Amps x 1.5 (Normal Duty); Drive Rated Amps x 1.8 (Heavy Duty)
	Display:	0.1 A

A486 [Shear Pin1 Level] Related Parameter(s): A487, A489

A488 [Shear Pin2 Level]

PF 525 PowerFlex 525 only.

Sets the value of current at which the shear pin fault occurs after the time set in A487, A489 [Shear Pin x Time]. Setting the value at 0.0 A disables this function.

Values	Default:	0.0 A (Disabled)
	Min/Max:	0.0/(Drive Rated Amps x 2)
	Display:	0.1 A

A487 [Shear Pin 1 Time] Related Parameter(s): A486, A488

A489 [Shear Pin 2 Time]

PF 525 PowerFlex 525 only.

Sets the continuous time the drive must be at or above the value set in A486, A488 [Shear Pinx Level] before a shear pin fault occurs.

Values	Default:	0.00 s
	Min/Max:	0.00/30.00 s
	Display:	0.01 s

Advanced Program Group *(continued)*

A490 [Load Loss Level] Related Parameter(s): A491

PF 525 PowerFlex 525 only.

Provides a software trip (Load Loss fault) when the current drops below this level for the time specified in A491 [Load Loss Time].

Values	Default:	0.0 A
	Min/Max:	0.0/Drive Rated Amps
	Display:	0.1 A

A491 [Load Loss Time] Related Parameter(s): A490

PF 525 PowerFlex 525 only.

Sets the required time for the current to be below A490 [Load Loss Level] before a Load Loss fault occurs.

Values	Default:	0 s
	Min/Max:	0/9999 s
	Display:	1 s

A492 [Stall Fault Time]

Sets the time that the drive remains in stall mode before a fault is issued.

Options	0	"60 Seconds" (Default)
	1	"120 Seconds"
	2	"240 Seconds"
	3	"360 Seconds"
	4	"480 Seconds"
	5	"Flt Disabled"

A493 [Motor OL Select] Related Parameter(s): P032, P033

Drive provides Class 10 overload protection. Settings 0...2 select the derating factor for the I^2t overload function.

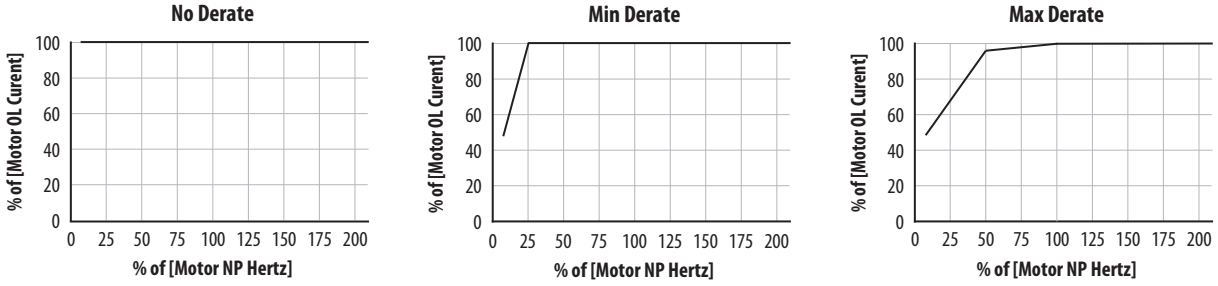

Options	0	"No Derate" (Default)
	1	"Min. Derate"
	2	"Max. Derate"

A494 [Motor OL Ret]

Selects whether the motor overload counter is saved on power-down or reset on power-up.

Options	0	"Reset" (Default)
	1	"Save"

Advanced Program Group *(continued)*

A495 [Drive OL Mode]

Determines how the drive handles overload conditions that would otherwise cause the drive to fault.

Options	0	"Disabled"
	1	"Reduce CLim"
	2	"Reduce PWM"
	3	"Both-PWM 1st" (Default)

A496 [IR Voltage Drop] Related Parameter(s): P040

Value of volts dropped across the resistance of the motor stator (autotune) for induction motor.

Values	Default:	Based on Drive Rating
	Min/Max:	0.0/600.0VAC
	Display:	0.1VAC

A497 [Flux Current Ref] Related Parameter(s): P040

This is the current necessary for full motor flux. The value should be set to the full speed no-load current of the motor.

Values	Default:	Based on Drive Rating
	Min/Max:	0.00/(Drive Rated Amps x 1.4)
	Display:	0.01 A

A498 [Motor Rr]

PF 525 PowerFlex 525 only.

Rotor resistance of induction motor. The value of this parameter will populate when a full rotate tune is performed.

Values	Default:	Based on Drive Rating
	Min/Max:	0.00/655.35 ohm
	Display:	0.01 ohm

A499 [Motor Lm]

PF 525 PowerFlex 525 only.

Mutual Inductance of induction motor. The value of this parameter will populate when a full rotate tune is performed.

Values	Default:	Based on Drive Rating
	Min/Max:	0.0/6553.5 mH
	Display:	0.1 mH

A500 [Motor Lx]

PF 525 PowerFlex 525 only.

Leakage Inductance of induction motor. The value of this parameter will populate when a full rotate tune is performed.

Values	Default:	Based on Drive Rating
	Min/Max:	0.0/6553.5 mH
	Display:	0.1 mH

A501 [PM IR Voltage]

PF 525 PowerFlex 525 only.

(With FRN 5.xxx and later.)

Voltage across the stator resistance of the PM motor at the rated motor current displayed in line-to-line rms value.

Values	Default:	11.50V
	Min/Max:	0.00/655.35V
	Display:	0.01V

Advanced Program Group *(continued)*

A502 [PM IXd Voltage]

PF 525 PowerFlex 525 only.

(With FRN 5.xxx and later.)
Voltage across the d-axis stator inductance of the PM motor at the rated motor current and the rated motor frequency displayed in line-to-line rms value.

Values	Default:	17.91V
	Min/Max:	0.00/655.35V
	Display:	0.01V

A503 [PM IXq Voltage]

PF 525 PowerFlex 525 only.

(With FRN 5.xxx and later.)
Voltage across the q-axis stator inductance of the PM motor at the rated motor current and the rated motor frequency displayed in line-to-line rms value.

Values	Default:	53.21V
	Min/Max:	0.00/655.35V
	Display:	0.01V

A504 [PM BEMF Voltage]

PF 525 PowerFlex 525 only.

(With FRN 5.xxx and later.)
Back electromotive force (EMF) voltage.

Values	Default:	1640.0 Drive Rated Volts
	Min/Max:	0.0/6000.0 Drive Rated Volts
	Display:	0.1V

A509 [Speed Reg Sel] Related Parameter(s): A521, A522, A523, A524, A525, A526

PF 525 PowerFlex 525 only.

Determines if PI gain of the "Vector" control mode speed regulator is set automatically or manually. Parameters A521...A526 are set automatically by this parameter.

Options	0	"Automatic" (Default)
	1	"Manual"

A510 [Freq 1]
A512 [Freq 2]
A514 [Freq 3]

PF 525 PowerFlex 525 only.

Sets the "Vector" control mode frequency.

Values	Default:	
	Freq 1:	8.33%
	Freq 2:	15.00%
	Freq 3:	20.00%
	Min/Max:	0.00/200.00%
	Display:	0.01%

Advanced Program Group *(continued)*

A511 [Freq 1 BW]
A513 [Freq 2 BW]
A515 [Freq 3 BW]

PF 525 PowerFlex 525 only.

Speed control loop bandwidth for "Vector" control mode.

Values	Default:	10 Hz
	Min/Max:	0/40 Hz
	Display:	1 Hz

A516 [PM Initial Sel]

PF 525 PowerFlex 525 only.

(With FRN 5.xxx and later.)
PM initial angle detect.

Options	0 "Align" (Default)	
	1 "HFI"	High Frequency Injection to detect initial angle.
	2 "Six Pulse"	

A517 [PM DC Inject Cur]

PF 525 PowerFlex 525 only.

(With FRN 5.xxx and later.)
Maximum DC current in amps applied to the motor in order to reset the rotor position of a PM motor.

Values	Default:	30%
	Min/Max:	0/300%
	Display:	1%

A518 [PM Align Time]

PF 525 PowerFlex 525 only.

(With FRN 5.xxx and later.)
Magnetic pole reorientation time.

Values	Default:	0.7 s
	Min/Max:	0.0/60.0 s
	Display:	0.1 s

A519 [PM HFI NS Cur]

PF 525 PowerFlex 525 only.

(With FRN 5.xxx and later.)
High Frequency Injection (HFI) North South Current to detect N/S Magnet.

Values	Default:	100%
	Min/Max:	0/300%
	Display:	1%

A520 [PM Bus Reg Kd]

PF 525 PowerFlex 525 only.

(With FRN 5.xxx and later.)
Derivative gain for bus regulator.

Values	Default:	2
	Min/Max:	0/500
	Display:	1

Advanced Program Group *(continued)*

A521 [Freq 1 Kp]
A523 [Freq 2 Kp]
A525 [Freq 3 Kp]

Related Parameter(s): A509, A510

PF 525 PowerFlex 525 only.

Sets P-gain of "Vector" control mode when in frequency region 1, 2 or 3 for faster speed response during dynamic-state where motor is still accelerating. If A509 [Speed Reg Sel] is set to 1 "Manual", these parameters can be changed.

Values	Default:	100.0%
	Min/Max:	0.0/500.0%
	Display:	0.1%

A522 [Freq 1 Ki]
A524 [Freq 2 Ki]
A526 [Freq 3 Ki]

Related Parameter(s): A509, A510

PF 525 PowerFlex 525 only.

Sets I-gain of "Vector" control mode when in frequency region 1, 2 or 3 for faster speed response during steady-state where motor is at its rated speed. If A509 [Speed Reg Sel] is set to 1 "Manual", these parameters can be changed.

Values	Default:	0.100 s
	Min/Max:	0.000/10.000 s
	Display:	0.001 s

A527 [PM FWKn 1 Kp]

PF 525 PowerFlex 525 only.

(With FRN 5.xxx and later.)
The gain to ensure good performance in field weakening region.

Values	Default:	250%
	Min/Max:	0/2000%
	Display:	1%

A528 [PM FWKn 2 Kp]

PF 525 PowerFlex 525 only.

(With FRN 5.xxx and later.)
The gain to ensure robustness under step load in weakening region.

Values	Default:	100%
	Min/Max:	100/8000%
	Display:	1%

Advanced Program Group *(continued)*

A529 [PM Control Cfg]

PF 525 PowerFlex 525 only.

(With FRN 5.xxx and later.)
Control configuration for Feed Forward Decouple (FFD), Maximum Torque Per Amp (MTPA), and Load Disturbance Observer (LDOB).

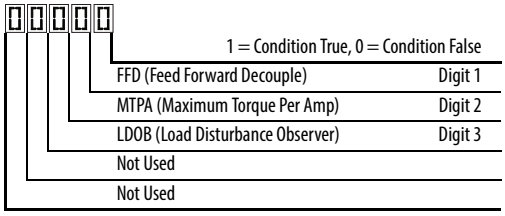

Values	Default:	00111
	Min/Max:	00000/00111
	Display:	00000

A530 [Boost Select]

Related Parameter(s): b004, P031, P032, P039

Sets the boost voltage (% of P031 [Motor NP Volts]) and redefines the V/Hz curve. Only used for V/Hz control modes.

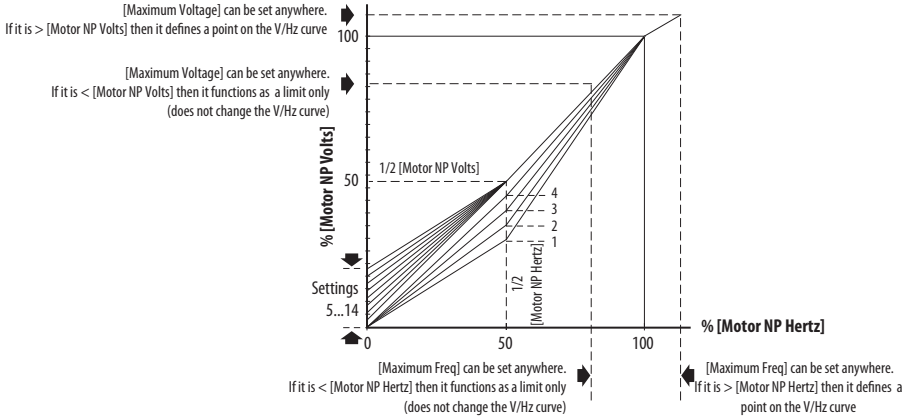

Options	0	"Custom V/Hz"	
	1	"30.0, VT"	Fan/Pump Curves (Variable Torque)
	2	"35.0, VT"	
	3	"40.0, VT"	
	4	"45.0, VT"	
	5	"0.0, no IR"	Boost Voltage (% of Base) (Constant Torque)
	6	"0.0" (Default for 400V and 600V drives, 5 HP and above)	
	7	"2.5, CT" (Default for 200V drives, 5 HP and above)	
	8	"5.0, CT" (Default for drives below 5 HP)	
	9	"7.5, CT"	
	10	"10.0, CT"	
	11	"12.5, CT"	
	12	"15.0, CT"	
	13	"17.5, CT"	
	14	"20.0, CT"	

Advanced Program Group *(continued)*

A531 [Start Boost] Related Parameter(s): P031, P032, P039, A530

Sets the boost voltage (% of P031 [Motor NP Volts]) and redefines the V/Hz curve when A530 [Boost Select] = 0 "Custom V/Hz" and P039 [Torque Perf Mode] = 0 "V/Hz".

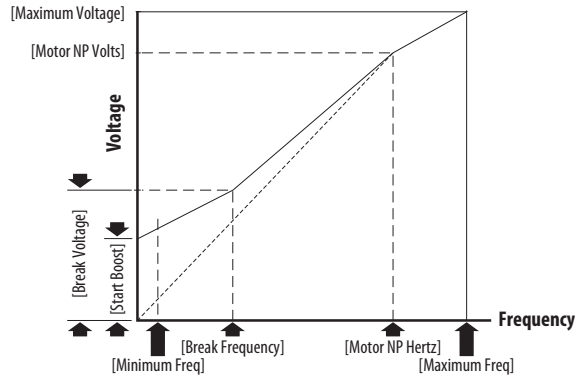

Values	Default:	2.5%
	Min/Max:	0.0/25.0%
	Display:	0.1%

A532 [Break Voltage] Related Parameter(s): P031, P032, P039, A530, A533

Sets the voltage (in percent of [Base Frequency]) at the A533 [Break Frequency] if A530 [Boost Select] is set to 0 "Custom V/Hz".

Values	Default:	25.0%
	Min/Max:	0.0/100.0%
	Display:	0.1%

A533 [Break Frequency] Related Parameter(s): P031, P032, P039, A530, A532

Sets the frequency where A532 [Break Voltage] is applied if A530 [Boost Select] is set to 0 "Custom V/Hz".

Values	Default:	15.0 Hz
	Min/Max:	0.0/500.0 Hz
	Display:	0.1 Hz

A534 [Maximum Voltage] Related Parameter(s): b004

Sets the highest voltage the drive outputs.

Values	Default:	Drive Rated Volts
	Min:	10V AC (on 230V AC Drives); 20V AC (on 460V AC Drives); 25V AC (on 600V AC Drives)
	Max:	255V AC (on 230V AC Drives); 510V AC (on 460V AC Drives); 637.5V AC (on 600V AC Drives)
	Display:	1V AC

Advanced Program Group *(continued)*

A535 [Motor Fdbk Type]

Related Parameter(s):P039, A537

Stop drive before changing this parameter.

Selects the encoder type.(1)

ATTENTION: The loss of analog input, encoder or other feedback may cause unintended speed or motion. Take appropriate precautions to guard against possible unintended speed or motion.

			Allowable Control Modes (See P039 [Torque Perf Mode])	Hardware Inputs
Options	0	"None" (Default)	V/Hz, SVC, Economize, Vector, PM Control	–
	1	"Pulse Train"	V/Hz, SVC, Economize, PM Control	[DigIn TermBlk 05] for PowerFlex 523 [DigIn TermBlk 07] for PowerFlex 525
	2	"Single Chan"(2)	V/Hz, SVC, Economize, PM Control	Optional incremental encoder card (catalog number 25-ENC-1)
	3	"Single Check"(2)	V/Hz, SVC, Economize, PM Control	
	4	"Quadrature"(2)	V/Hz, SVC, Economize, Vector, PM Control	
	5	"Quad Check"(2)	V/Hz, SVC, Economize, Vector, PM Control	

(1) Parameter is also available in PowerFlex 523 FRN 3.xxx and later.

(2) Setting is specific to PowerFlex 525 drives only.

A536 [Encoder PPR]

PF 525 PowerFlex 525 only.

Specifies the encoder Pulses Per Revolution (PPR) when an encoder is used.

To achieve speed range/accuracy for SVC and VVC closed loop control, a minimum of 1024 PPR encoder is recommended. The maximum encoder pulse is 250 kHz.

For more information, see Determine Encoder Pulse Per Revolution (PPR) Specification Based on Speed Resolution on page 217.

Values	Default:	1024 PPR
	Min/Max:	1/20000 PPR
	Display:	1 PPR

A537 [Pulse In Scale]

Related Parameter(s): t065, t067, A535

Sets the scale factor/gain for the Pulse Input when t065 [DigIn TermBlk 05] or t067 [DigIn TermBlk 07] is set to 52 "Pulse Train", or A535 [Motor Fdbk Type] is set to 1 "Pulse Train".

Input frequency (Hz) / Pulse in Scale = Output frequency (Hz)

Values	Default:	64
	Min/Max:	0/20000
	Display:	1

A538 [Ki Speed Loop]

Sets the I-gain used in the PI calculation of the speed loop when feedback is used. Applicable to V/Hz and SVC modes in closed loop control only.(1)

Values	Default:	2.0
	Min/Max:	0.0/400.0
	Display:	0.1

(1) Parameter is also available in PowerFlex 523 FRN 3.xxx and later.

A539 [Kp Speed Loop]

Sets the P-gain used in the PI calculation of the speed loop when feedback is used. Applicable to V/Hz and SVC modes in closed loop control only.(1)

Values	Default:	5.0
	Min/Max:	0.0/200.0
	Display:	0.1

(1) Parameter is also available in PowerFlex 523 FRN 3.xxx and later.

Advanced Program Group *(continued)*

A540 [Var PWM Disable] Related Parameter(s): A440

Stop drive before changing this parameter.

Enables/disables a feature that varies the carrier frequency for the PWM output waveform defined by A440 [PWM Frequency].

Options	0	"Enabled" (Default)
	1	"Disabled"

A541 [Auto Rstrt Tries] Related Parameter(s): A542

Sets the maximum number of times the drive attempts to reset a fault and restart. See Chapter 4 for more information on faults and fault codes.

Clear a Type 1 fault and restart the drive.
1. Set A541 [Auto Rstrt Tries] to a value other than "0".
2. Set A542 [Auto Rstrt Delay] to a value other than "0".

Clear an OverVoltage, UnderVoltage or Heatsink OvrTmp fault without restarting the drive.
1. Set A541 [Auto Rstrt Tries] to a value other than "0".
2. Set A542 [Auto Rstrt Delay] to "0".

ATTENTION: Equipment damage and/or personal injury may result if this parameter is used in an inappropriate application. Do not use this function without considering applicable local, national and international codes, standards, regulations or industry guidelines.

Values	Default:	0
	Min/Max:	0/9
	Display:	1

A542 [Auto Rstrt Delay] Related Parameter(s): A541

Sets the time between restart attempts if A541 [Auto Rstrt Tries] is not zero.

Values	Default:	1.0 s
	Min/Max:	0.0/120.0 s
	Display:	0.1 s

A543 [Start At PowerUp]

Stop drive before changing this parameter.

Enables/disables drive start on power up without a Run command being cycled. Requires a digital input configured for Run and a valid run signal.

ATTENTION: Equipment damage and/or personal injury may result if this parameter is used in an inappropriate application. Do not use this function without considering applicable local, national and international codes, standards, regulations or industry guidelines.

Options	0	"Disabled" (Default)
	1	"Enabled"

A544 [Reverse Disable] Related Parameter(s): b006

Stop drive before changing this parameter.

Enables/disables the function that allows the direction of motor rotation to be changed.

Options	0	"Rev Enabled" (Default)
	1	"Rev Disabled"

A545 [Flying Start En]

Sets the condition that allows the drive to reconnect to a spinning motor at actual RPM.

Options	0	"Disabled" (Default)
	1	"Enabled" Catch and ramp to commanded speed at every drive start.

Advanced Program Group *(continued)*

A546 [FlyStrt CurLimit]

Used to determine when the drive has matched the motor frequency if flying start is enabled.

Values	Default:	150%
	Min/Max:	30/200%
	Display:	1%

A547 [Compensation]

Enables/disables correction options that may improve problems with motor instability.

Options	0	"Disabled"	No compensation.
	1	"Electrical" (Default)	Some drive/motor combinations have inherent instabilities which are exhibited as non-sinusodial motor currents. This setting attempts to correct this condition
	2	"Mechanical"	Some motor/load combinations have mechanical resonances which can be excited by the drive current regulator. This setting slows down the current regulator response and attempts to correct this condition.
	3	"Both"	

A548 [Power Loss Mode]

Sets the reaction to a loss of input power.

Options	0	"Coast" (Default)	Drive faults and motor coasts to a stop.
	1	"Decel"	Drive decelerates and attempts to keep the DC bus voltage above the undervoltage level.

A549 [Half Bus Enable]

Enables/disables the power ride through function which allows the drive to maintain power to the motor at 50% drive input voltage during short-term power sag conditions.

ATTENTION: To guard against drive damage, a minimum line impedance must be provided to limit inrush current when the power line recovers. The input impedance should be equal or greater than the equivalent of a 5% transformer with a VA rating 6 times the drive's input VA rating if Half Bus is enabled.

Options	0	"Disabled" (Default)	
	1	"Enabled"	

A550 [Bus Reg Enable]

Related Parameter(s): A437

Enables/disables the bus regulator.

Options	0	"Disabled"	
	1	"Enabled" (Default)	

A551 [Fault Clear]

Stop drive before changing this parameter.

Resets a fault and clears the fault queue.

Options	0	"Ready/Idle" (Default)	
	1	"Reset Fault"	Resets the active fault but does not clear any fault buffer.
	2	"Clear Buffer"	Resets the active fault and clears all fault buffers to "0".

A552 [Program Lock]

Related Parameter(s): A553

Protects parameters against change by unauthorized personnel with a 4-digit password.

Values	Default:	0000
	Min/Max:	0000/9999
	Display:	1111

Advanced Program Group *(continued)*

A553 [Program Lock Mod] Related Parameter(s): A552

Determines the lock mode used in parameter A552 [Program Lock]. When set to 2 or 3, A552 [Program Lock] is added to the custom group to allow unlocking of parameters.

Options	0	"Full Lock" (Default)	All parameters are locked except [Program Lock].
	1	"Keypad Lock"	All parameters are locked except [Program Lock] from keypad access but can still be accessed over communications.
	2	"Custom Only"	All parameters are locked and hidden except custom group and [Program Lock].
	3	"KeyPd Custom"	All parameters are locked and hidden except custom group and [Program Lock] from keypad access but can still be accessed over communications.

A554 [Drv Ambient Sel]

Sets the maximum expected ambient of the drive when used above 50 °C. When ambient temperature is above 50 °C, the drive will apply necessary current derating.

Options	0	"Normal" (Default)	
	1	"55C"	
	2	"60C"	
	3	"65C +Fan Kit"	Fan kit required.
	4	"70C +Fan Kit"	

A555 [Reset Meters] Related Parameter(s): b019, b021, b022, b023, b024, b025, b026, d362, d363

Resets the values stored in the parameters that track fault times and energy usage.

Options	0	"Ready/Idle" (Default)	
	1	"Reset Meters"	Resets kWh, MWh, Accum kWh, Cost, and CO2 Sav parameter values.
	2	"Reset Time"	Resets min, hr, and x10 hr.

A556 [Text Scroll]

Sets the scrolling speed of the text in the LCD display.

Options	0	"Off"	No scroll.
	1	"Low Speed"	
	2	"Mid Speed" (Default)	
	3	"High Speed"	

A557 [Out Phas Loss En]

Enable/disable output phase loss detection.

ATTENTION: Equipment damage and/or personal injury may result if this parameter is used in an inappropriate application. Do not use this function without considering applicable local, national and international codes, standards, regulations or industry guidelines.

Options	0	"Disable" (Default)
	1	"Enable"

A558 [Positioning Mode]

Stop drive before changing this parameter.

PF 525 PowerFlex 525 only.

Defines the positioning transition mode used for the position steps.

Options	0	"Time Steps" (Default)	Steps based on time.
	1	"Preset Input"	Preset inputs directly commands a given step.
	2	"Step Logic"	Use Step Logic Commands. Always start from Step 0.
	3	"Preset StpL"	Use Preset Inputs to determine starting step then Step Logic commands.
	4	"StpLogic-Lst"	Use Step Logic commands from last Step Logic step at last drive stop.

Advanced Program Group *(continued)*

A559 [Counts Per Unit]

PF 525 PowerFlex 525 only.

Sets the number of encoder counts equal to one user-defined unit.

Values	Default:	4096
	Min/Max:	1/32000
	Display:	1

A560 [Enh Control Word]

Related Parameter(s): t062, t063, t065 - t068, A571

PF 525 PowerFlex 525 only.

Allows control of positioning and other functions through parameter control for use over comms. The functions replicate the digital input options and function in the same way.

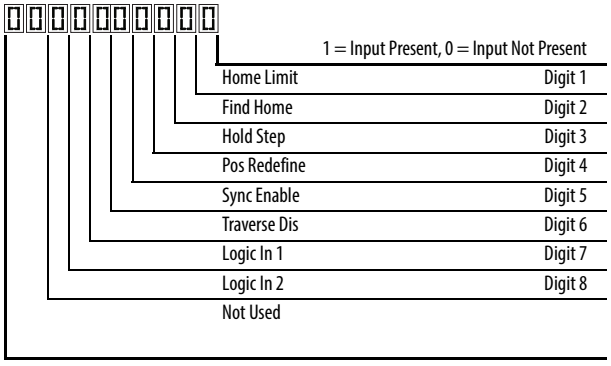

Values	Default:		0000 0000
	Min/Max:		0000 0000/1111 1111
	Display:		0000 0000
Digits	0	"Home Limit"	In Positioning mode, this indicates the drive is at the home position
	1	"Find Home"	When set, the next start command causes the drive to find home. Set this bit to 0 after completing the homing routine.
	2	"Hold Step"	In Positioning mode, this input over-rides other inputs and causes the drive to remain at its current step (running at zero speed once it reaches its position) until released.
	3	"Pos Redefine"	In Positioning mode, this input resets the home position to the current position of the machine. Set this bit to 0 after completing the homing routine.
	4	"Sync Enable"	Must be used in order to hold the existing frequency when Sync Time is set to enable speed synchronization. When this bit is reset to zero the drive accelerates to the new commanded frequency based on A571 [Sync Time] setting.
	5	"Traverse Dis"	When set the traverse function is disabled.
	6	"Logic In 1"	This provides an identical function as the "Logic In1" Digital Input option. This bit is logically ORed with a digital input t062, t063, t065-t068 [DigIn TermBlk xx] set to 24 "Logic In1". It can be used to move through the Step-Logic functions (speed or position) using comms control without requiring actual digital input transitions.
	7	"Logic In 2"	This provides and identical function as the "Logic In2" Digital Input option. This bit is logically ORed with a digital input t062, t063, t065-t068 [DigIn TermBlk xx] set to 25 "Logic In2". It can be used to move through the Step-Logic functions (speed or position) using comms control without requiring actual digital input transitions.

A561 [Home Save]

PF 525 PowerFlex 525 only.

Determines whether the current position is saved on power down.

Options	0	"Home Reset" (Default)	Position resets to zero on power up.
	1	"Home Saved"	

Advanced Program Group *(continued)*

A562 [Find Home Freq]

PF 525 PowerFlex 525 only.

Sets the maximum frequency the drive uses when "Find Home" is issued.

Values	Default:	10.0 Hz
	Min/Max:	0.1/500.0 Hz
	Display:	0.1 Hz

A563 [Find Home Dir]

Stop drive before changing this parameter.

PF 525 PowerFlex 525 only.

Sets the direction the drive commands when "Find Home" is issued.

Options	0	"Forward" (Default)
	1	"Reverse"

A564 [Encoder Pos Tol]

PF 525 PowerFlex 525 only.

Sets the "At Position" and the "At Home' tolerance around the encoder count. The value is added to and subtracted from the target encoder unit value to create the tolerance range.

Values	Default:	100
	Min/Max:	1/50000
	Display:	1

A565 [Pos Reg Filter]

PF 525 PowerFlex 525 only.

Sets the error signal filter in the position regulator.

Values	Default:	8
	Min/Max:	0/15
	Display:	1

A566 [Pos Reg Gain]

PF 525 PowerFlex 525 only.

Sets the gain adjustment for the position regulator.

Values	Default:	3.0
	Min/Max:	0.0/200.0
	Display:	0.1

Advanced Program Group *(continued)*

A567 [Max Traverse]

Sets the amplitude of triangle wave speed modulation.

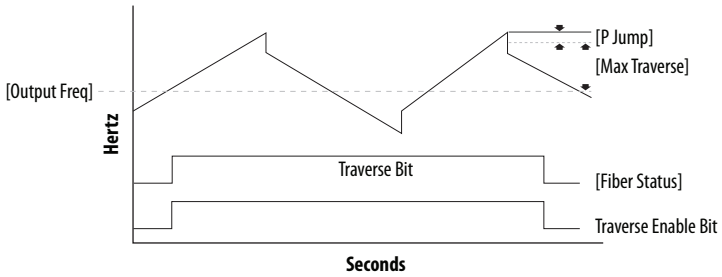

Values	Default:	0.00 Hz
	Min/Max:	0.00/300.00 Hz
	Display:	0.01 Hz

A568 [Traverse Inc] Related Parameter(s): A567

Sets the time required for the Traverse function to accelerate from the minimum to the maximum traverse frequency. See the diagram at A567 [Max Traverse].

Values	Default:	0.00 s
	Min/Max:	0.00/300.00 s
	Display:	0.01 s

A569 [Traverse Dec] Related Parameter(s): A567

Sets the time required for the Traverse function to decelerate from the maximum to the minimum traverse frequency. See the diagram at A567 [Max Traverse].

Values	Default:	0.00 s
	Min/Max:	0.00/300.00 s
	Display:	0.01 s

A570 [P Jump] Related Parameter(s): A567

Sets the frequency amplitude that is added to or subtracted from the commanded frequency. See the diagram at A567 [Max Traverse].

Values	Default:	0.00 Hz
	Min/Max:	0.00/300.00 Hz
	Display:	0.01 Hz

A571 [Sync Time] Related Parameter(s): t062, t063, t065 - t068, A560

Enables the function that holds the drive at the current frequency even if the commanded frequency changes. Used with t062, t063, t065-t068 [DigIn TermBlk xx] 32 “Sync Enable”.

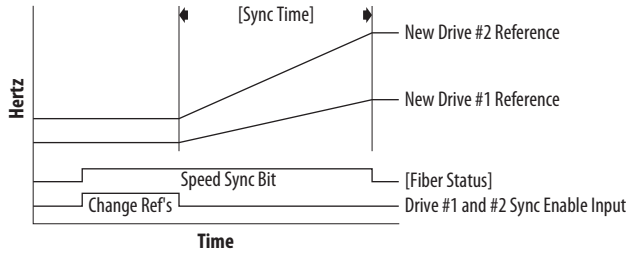

Values	Default:	0.0 s
	Min/Max:	0.0/3200.0 s
	Display:	0.1 s

Advanced Program Group *(continued)*

A572 [Speed Ratio]

Stop drive before changing this parameter.

Scales the drive speed command.

Values	Default:	1.00
	Min/Max:	0.01/99.99
	Display:	0.01

A573 [Mtr Options Cfg]

(With PowerFlex 525 FRN 2.xxx and later.)
(With PowerFlex 523 FRN 3.xxx and later.)

Sets the configuration of the motor option.

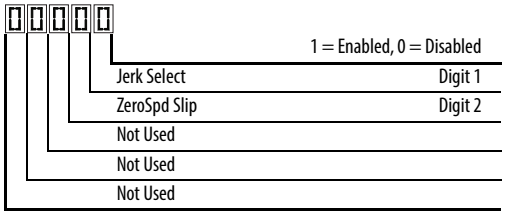

Options	Description
Jerk Select	Limits the rate of change to the velocity reference for improved current limiting. Set to 0 "Disabled" for positioning type applications with fast Accel or Decel times.
ZeroSpd Slip	Sets slip compensation to 0.0 Hz when the following conditions are met: • Commanded speed = 0.00 Hz • Status of drive = "At speed" • ZeroSpd Slip = 1 "Enabled"

Values	Default:	11
	Min/Max:	00/11
	Display:	00

A574 [RdyBit Mode Cfg]

Related Parameter(s): d392

Stop drive before changing this parameter.

(With PowerFlex 525 FRN 3.xxx and later.)
(With PowerFlex 523 FRN 3.xxx and later.)

Determines which Stop conditions causes the drive's Ready bit (Network Logic Status bit 1) to go low (0). A reset or power cycle is required after selection is made.

	Ready Bit Status(2)	
Stop Conditions	**Standard**	**Enhanced**
Drive fault	0	0
Stop digital input terminal 01/11 open	1	0
Holding down the drive's keypad or the Remote DSI HIM Stop button	1	0
Stop commanded through Comms (Stop bit = 1)	1	0
Software (SW) Enable digital input terminal open	1	0
Safe-Torque-Off (STO) condition with value of t105 [Safety Open En] set to 1 "FaultDisabled"(1)	0	0

(1) Condition is specific to PowerFlex 525 drives only.
(2) 1 = Active, 0 = Inactive

Options	0	"Standard" (Default)
	1	"Enhanced"

A575 [Flux Braking En]

Related Parameter(s): A550

(With PowerFlex 525 FRN 5.xxx and later.)
(With PowerFlex 523 FRN 3.xxx and later.)

Enables/disables flux braking.

Options	0	"Disable" (Default)
	1	"Enable"

Advanced Program Group *(continued)*

A576 [Phase Loss Level]

(With PowerFlex 525 FRN 5.xxx and later.)
(With PowerFlex 523 FRN 3.xxx and later.)
Output Phase Loss Level. Sets the threshold level which is used to determine an output phase loss condition.
Each motor phase must exceed this value. Decreasing this parameter's value lowers sensitivity.

Values	Default:	25.0% for Induction motor; 4.0% for PM motor
	Min/Max:	0.0/100.0%
	Display:	0.1%

A580 [Current Loop BW]

PF 525 PowerFlex 525 only.

(With FRN 5.xxx and later.)
Current loop bandwidth (0 = Automatically calculate the control gain of current loop).

Values	Default:	0 Hz
	Min/Max:	0/65535 Hz
	Display:	1 Hz

A581 [PM Stable 1 Freq]

PF 525 PowerFlex 525 only.

(With FRN 5.xxx and later.)
The start frequency for stabilization loop (P032 [Motor NP Hertz] x A581 [PM Stable 1 Freq]).

Values	Default:	0%
	Min/Max:	0/100%
	Display:	1%

A582 [PM Stable 2 Freq]

PF 525 PowerFlex 525 only.

(With FRN 5.xxx and later.)
Stabilization function will return to normal output after this frequency (P032 [Motor NP Hertz] x A582 [PM Stable 2 Freq]).

Values	Default:	45%
	Min/Max:	0/100%
	Display:	1%

A583 [PM Stable 1 Kp]

PF 525 PowerFlex 525 only.

(With FRN 5.xxx and later.)
Percentage of the gain for stabilization loop. The gain is set in A584 [PM Stable 2 Kp].

Values	Default:	40%
	Min/Max:	0/100%
	Display:	1%

A584 [PM Stable 2 Kp]

PF 525 PowerFlex 525 only.

(With FRN 5.xxx and later.)
The gain for stabilization loop.

Values	Default:	250%
	Min/Max:	0/2000%
	Display:	1%

Advanced Program Group *(continued)*

A585 [PM Stable Brk Pt]

PF 525 PowerFlex 525 only.

(With FRN 5.xxx and later.)
Percentage of rated power P037 [Motor NP Power] for the gain of (A584 [PM Stable 2 Kp] x A583 [PM Stable 1 Kp]).

Values	Default:	40%
	Min/Max:	0/100%
	Display:	1%

A586 [PM Stepload Kp]

PF 525 PowerFlex 525 only.

(With FRN 5.xxx and later.)
The gain to ensure robustness under step load in low speed region.

Values	Default:	0%
	Min/Max:	0/1000%
	Display:	1%

A587 [PM 1 Efficiency]

PF 525 PowerFlex 525 only.

(With FRN 5.xxx and later.)
Reduce full load current.

Values	Default:	120%
	Min/Max:	0/2000%
	Display:	1%

A588 [PM 2 Efficiency]

PF 525 PowerFlex 525 only.

(With FRN 5.xxx and later.)
Reduce no load current.

Values	Default:	500%
	Min/Max:	0/2000%
	Display:	1%

A589 [PM Algor Sel] Related Parameter(s): A550

Stop drive before changing this parameter.

PF 525 PowerFlex 525 only.

(With FRN 5.xxx and later.)
Selects the algorithm to use with your motor. Check with the manufacturer of your motor to determine whether it is an iPM or sPM motor.

Options	0	"Algorithm 1" (Default)	Suggested for most motors.
	1	"Algorithm 2"	Enable an embedded algorithm to reduce oscillation in output waveform (use with sPM motor only, do not enable for iPM motor).

Network Parameter Group

This group contains parameters for the network option card that is installed.

Refer to the network option card's user manual for more information on the available parameters.

Modified Parameter Group

This group contains parameters that have their values changed from the factory default.

When a parameter has its default value changed, it is automatically added to this group. When a parameter has its value changed back to the factory default, it is automatically removed from this group.

Fault and Diagnostic Group

F604 [Fault 4 Code]
F605 [Fault 5 Code]
F606 [Fault 6 Code]
F607 [Fault 7 Code]
F608 [Fault 8 Code]
F609 [Fault 9 Code]
F610 [Fault10 Code]

Related Parameter(s): b007-b009

A code that represents a drive fault. The codes appear in these parameters in the order they occur (b007 [Fault 1 Code] = the most recent fault). Repetitive faults are only recorded once.

Values	Default:	Read Only
	Min/Max:	F0/F127
	Display:	F0

F611 [Fault 1 Time-hr] **F612 [Fault 2 Time-hr]**
F613 [Fault 3 Time-hr] **F614 [Fault 4 Time-hr]**
F615 [Fault 5 Time-hr]
F616 [Fault 6 Time-hr] **F617 [Fault 7 Time-hr]**
F618 [Fault 8 Time-hr] **F619 [Fault 9 Time-hr]**
F620 [Fault10 Time-hr]

PF 525 PowerFlex 525 only.

Related Parameter(s): d362

Displays the value of d362 [Elapsed Time-hr] when the fault occurs.

Values	Default:	Read Only
	Min/Max:	0/32767 hr
	Display:	1 hr

F621 [Fault 1 Time-min] **F622 [Fault 2 Time-min]**
F623 [Fault 3 Time-min] **F624 [Fault 4 Time-min]**
F625 [Fault 5 Time-min]
F626 [Fault 6 Time-min] **F627 [Fault 7 Time-min]**
F628 [Fault 8 Time-min] **F629 [Fault 9 Time-min]**
F630 [Fault10 Time-min]

PF 525 PowerFlex 525 only.

Related Parameter(s): d363

Displays the value of d363 [Elapsed Time-min] when the fault occurs.

Values	Default:	Read Only
	Min/Max:	0.0/320.0 min
	Display:	0.1 min

Fault and Diagnostic Group *(continued)*

F631 [Fault 1 Freq] **F632 [Fault 2 Freq]**
F633 [Fault 3 Freq] **F634 [Fault 4 Freq]**
F635 [Fault 5 Freq]

F636 [Fault 6 Freq] **F637 [Fault 7 Freq]**
F638 [Fault 8 Freq] **F639 [Fault 9 Freq]**
F640 [Fault10 Freq]

PF 525 PowerFlex 525 only.

Related Parameter(s): b001

Displays and stores the value of b001 [Output Freq] with the most recent 10 faults occurred.
[Fault 1 Freq] stores the most recent fault, [Fault 2 Freq] stores the second most recent fault and [Fault 3 Freq] stores the third most recent fault.

Values	Default:	Read Only
	Min/Max:	0.00/500.00 Hz
	Display:	0.01 Hz

F641 [Fault 1 Current] **F642 [Fault 2 Current]**
F643 [Fault 3 Current] **F644 [Fault 4 Current]**
F645 [Fault 5 Current]

F646 [Fault 6 Current] **F647 [Fault 7 Current]**
F648 [Fault 8 Current] **F649 [Fault 9 Current]**
F650 [Fault10 Current]

PF 525 PowerFlex 525 only.

Related Parameter(s): b003

Displays and stores the value of b003 [Output Current] with the most recent 10 faults occurred.
[Fault 1 Current] stores the most recent fault, [Fault 2 Current] stores the second most recent fault and [Fault 3 Current] stores the third most recent fault.

Values	Default:	Read Only
	Min/Max:	0.00/(Drive Rated Amps x 2)
	Display:	0.01 A

F651 [Fault 1 BusVolts] **F652 [Fault 2 BusVolts]**
F653 [Fault 3 BusVolts] **F654 [Fault 4 BusVolts]**
F655 [Fault 5 BusVolts]

F656 [Fault 6 BusVolts] **F657 [Fault 7 BusVolts]**
F658 [Fault 8 BusVolts] **F659 [Fault 9 BusVolts]**
F660 [Fault10 BusVolts]

PF 525 PowerFlex 525 only.

Related Parameter(s): b005

Displays and stores the value of b005 [DC Bus Voltage] with the most recent 10 faults occurred.
[Fault 1 BusVolts] stores the most recent fault, [Fault2 BusVolts] stores the second most recent fault and [Fault 3 BusVolts] stores the third most recent fault.

Values	Default:	Read Only
	Min/Max:	0/1200VDC
	Display:	1VDC

Fault and Diagnostic Group *(continued)*

F661 [Status @ Fault 1] **F662 [Status @ Fault 2]**
F663 [Status @ Fault 3] **F664 [Status @ Fault 4]**
F665 [Status @ Fault 5]

Related Parameter(s): b006

F666 [Status @ Fault 6] **F667 [Status @ Fault 7]**
F668 [Status @ Fault 8] **F669 [Status @ Fault 9]**
F670 [Status @ Fault10]

PF 525 PowerFlex 525 only.

Displays the value of b006 [Drive Status] with the most recent 10 faults occurred.
[Status@ Fault 1] stores the most recent fault, [Status@ Fault 2] stores the second most recent fault and [Status@ Fault 3] stores the third most recent fault.

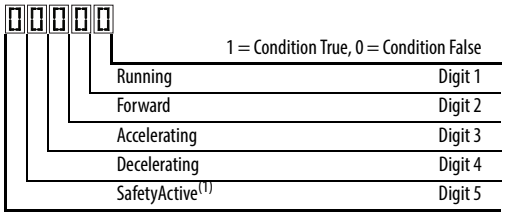

(1) Setting is specific to PowerFlex 525 drives only.

Values	Default:	Read Only
	Min/Max:	0/0x1F
	Display:	1

F681 [Comm Sts - DSI]

Displays the status of the RS485 serial (DSI) port to the drive.

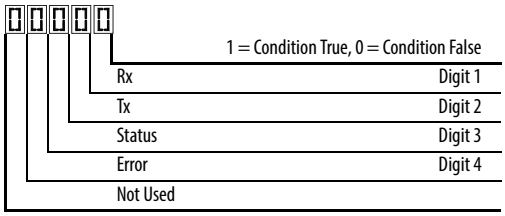

Digit 3 (Connection Status)	
0	"Not Active"
1	"Modbus slave network (external Modbus master)"
2	"Modbus multi-drive w/ internal com option master"
3	"Modbus multi-drive w/ embedded com master"(1)
4	"DSI peripheral connected"
5...8	"Reserved"
9	"RS-485 network faulted"

(1) Setting is specific to PowerFlex 525 drives only.

Values	Default:	Read Only
	Min/Max:	0000/1911
	Display:	0000

F682 [Comm Sts - Opt]

Displays the status of the internal communication to the drive.

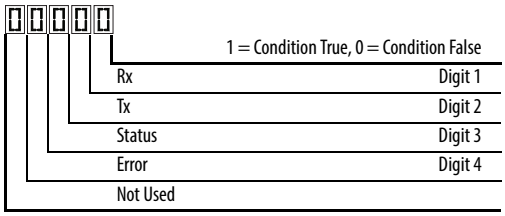

Digit 3 = "Internal Com option"	
0	"Not Active (no connection)"
1	"Internal option connected/active"
2...8	"Reserved"
9	"Internal com option faulted"

Values	Default:	Read Only
	Min/Max:	0000/1911
	Display:	0000

Fault and Diagnostic Group *(continued)*

F683 [Com Sts-Emb Enet]

PF 525 PowerFlex 525 only.

Displays the status of the embedded EtherNet/IP interface to the drive.

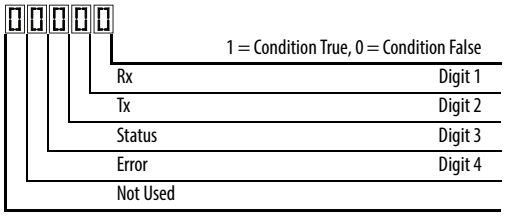

Digit 3 = "Embedded EtherNet/IP"	
0	"Not Active (no connection)"
1	"Embedded EtherNet/IP active"
2-8	"Reserved"
9	"Embedded EtherNet/IP faulted"

Values	Default:	Read Only
	Min/Max:	0000/1911
	Display:	0000

F684 [EN Addr Src]

PF 525 PowerFlex 525 only.

Displays the actual source of the Ethernet configuration (IP address, subnet mask, and gateway address).

Options	1	"Parameters"	Read Only
	2	"BOOTP"	

F685 [EN Rate Act]

PF 525 PowerFlex 525 only.

Displays the network data rate currently used by the embedded EtherNet/IP interface.

Options	0	"No Link"	Read Only
	1	"10Mbps Full"	
	2	"10Mbps Half"	
	3	"100Mbps Full"	
	4	"100Mbps Half"	
	5	"Dup IP Addr"	
	6	"Disabled"	

F686 [DSI I/O Act]

Displays the Drives that are active in Multi-Drive mode.

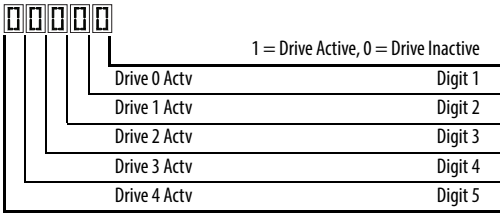

Value	Default:	Read Only
	Min/Max:	00000/11111
	Display:	00000

Fault and Diagnostic Group *(continued)*

F687 [HW Addr 1]
F688 [HW Addr 2]
F689 [HW Addr 3]
F690 [HW Addr 4]
F691 [HW Addr 5]
F692 [HW Addr 6]

PF 525 PowerFlex 525 only.

Shows the MAC address for the embedded EtherNet/IP interface.

Values	Default:	Read Only
	Min/Max:	0/255
	Display:	1

F693 [EN IP Addr Act 1]
F694 [EN IP Addr Act 2]
F695 [EN IP Addr Act 3]
F696 [EN IP Addr Act 4]

PF 525 PowerFlex 525 only.

Shows the actual IP address used by the embedded EtherNet/IP interface at the time. This indicates 0 if no address is set.

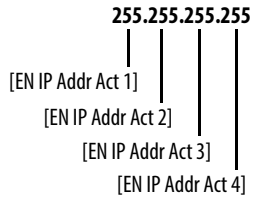

Values	Default:	Read Only
	Min/Max:	0/255
	Display:	1

F697 [EN Subnet Act 1]
F698 [EN Subnet Act 2]
F699 [EN Subnet Act 3]
F700 [EN Subnet Act 4]

PF 525 PowerFlex 525 only.

Shows the actual subnet mask used by the embedded EtherNet/IP interface at the time. This will indicate 0 if no address is set.

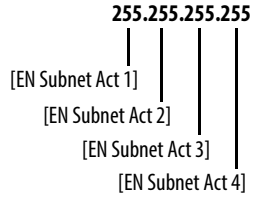

Values	Default:	Read Only
	Min/Max:	0/255
	Display:	1

Fault and Diagnostic Group *(continued)*

F701 [EN Gateway Act 1]
F702 [EN Gateway Act 2]
F703 [EN Gateway Act 3]
F704 [EN Gateway Act 4]

PF 525 PowerFlex 525 only.

Shows the actual gateway address used by the embedded EtherNet/IP interface at the time. This will indicate 0 if no address is set.

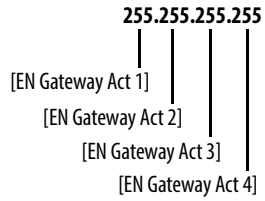

Values	Default:	Read Only
	Min/Max:	0/255
	Display:	1

F705 [Drv 0 Logic Cmd]
F709 [Drv 1 Logic Cmd]
F713 [Drv 2 Logic Cmd]
F717 [Drv 3 Logic Cmd]
F721 [Drv 4 Logic Cmd]

In multi-drive mode, this is the logic command being transmitted to drive 0/1/2/3/4/.
In single-drive mode, this is the logic command being used by the drive (whether HS-DSI, EtherNet/IP, or DSI) at the time. If comms control is NOT being used, and the drive is in single-drive mode, then this parameter will show 0.

Values	Default:	Read Only
	Min/Max:	0/FFFF
	Display:	1

F706 [Drv 0 Reference]
F710 [Drv 1 Reference]
F714 [Drv 2 Reference]
F718 [Drv 3 Reference]
F722 [Drv 4 Reference]

In multi-drive mode, this is the reference being transmitted to drive 0/1/2/3/4.
In single-drive mode, this is the reference being used by the drive (whether HS-DSI, EtherNet/IP, or DSI) at the time. If comms control is NOT being used, and the drive is in single-drive mode, then this parameter will show 0.

Values	Default:	Read Only
	Min/Max:	0.00/500.00 Hz
	Display:	0.01 Hz

F707 [Drv 0 Logic Sts]
F711 [Drv 1 Logic Sts]
F715 [Drv 2 Logic Sts]
F719 [Drv 3 Logic Sts]
F723 [Drv 4 Logic Sts]

In multi-drive mode, this is the logic status being received from drive 0/1/2/3/4.
In single-drive mode, this is the logic status of the drive at the time.

Values	Default:	Read Only
	Min/Max:	0/FFFF
	Display:	1

Fault and Diagnostic Group *(continued)*

F708 [Drv 0 Feedback]
F712 [Drv 1 Feedback]
F716 [Drv 2 Feedback]
F720 [Drv 3 Feedback]
F724 [Drv 4 Feedback]

In multi-drive mode, this is the feedback being received from drive 0/1/2/3/4.
In single-drive mode, this is the feedback of the drive at the time.

Values	Default:	Read Only
	Min/Max:	0.00/500.00 Hz
	Display:	0.01 Hz

F725 [EN Rx Overruns]

PF 525 PowerFlex 525 only.

A count of the number of receive overrun errors reported by the embedded EtherNet/IP interface.

Values	Default:	Read Only
	Min/Max:	0/65535
	Display:	1

F726 [EN Rx Packets]

PF 525 PowerFlex 525 only.

A count of the number of receive packets reported by the embedded EtherNet/IP interface.

Values	Default:	Read Only
	Min/Max:	0/65535
	Display:	1

F727 [EN Rx Errors]

PF 525 PowerFlex 525 only.

A count of the number of receive errors reported by the embedded EtherNet/IP interface.

Values	Default:	Read Only
	Min/Max:	0/65535
	Display:	1

F728 [EN Tx Packets]

PF 525 PowerFlex 525 only.

A count of the number of transmitted packets reported by the embedded EtherNet/IP interface.

Values	Default:	Read Only
	Min/Max:	0/65535
	Display:	1

F729 [EN Tx Errors]

PF 525 PowerFlex 525 only.

A count of the number of transmit errors reported by the embedded EtherNet/IP interface.

Values	Default:	Read Only
	Min/Max:	0/65535
	Display:	1

Fault and Diagnostic Group *(continued)*

F730 [EN Missed IO Pkt]

PF 525 PowerFlex 525 only.

The number of I/O packets missed.

Values	Default:	Read Only
	Min/Max:	0/65535
	Display:	1

F731 [DSI Errors]

The number of total DSI errors.

Values	Default:	Read Only
	Min/Max:	0/65535
	Display:	1

AppView Parameter Groups

AppView parameter groups provide a simple starting point for using the PowerFlex 520-series drives by grouping certain commonly used parameters based on different types of applications. Use these parameter groups to quickly and easily setup the PowerFlex 520-series drive for your application.

AppView parameter groups are available for the following applications:

- Conveyor
- Mixer
- Compressor
- Centrifugal Pump
- Blower/Fan
- Extruder
- Positioning (PowerFlex 525 only)
- Textile/Fiber

You cannot add or remove parameters to or from the AppView parameter groups. If you require quick access to additional parameters to what is already included in the different AppView parameter groups, use the CustomView parameter group instead.

The parameters in the AppView parameter groups can be quickly added to the CustomView parameter group by doing the following:

Step		Key(s)	Example Displays
1.	Press the Up Arrow or Down Arrow to scroll to an AppView group (G1...G8).	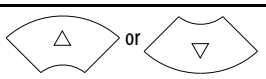	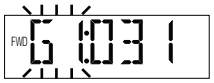
2.	Press Enter or Sel to enter a group. The right most digit of the last viewed parameter in that group will flash.	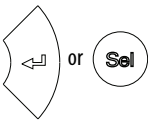	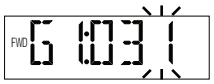
3.	Press the Up Arrow or Down Arrow to scroll to the command G1->GC.	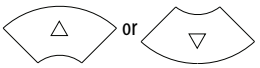	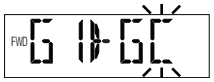
4.	Press Enter or Sel to add all the parameters in this AppView group to the CustomView group. The LCD display will show a confirmation.	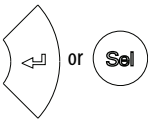	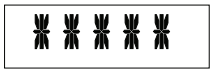

CustomView Parameter Group

CustomView allows you to quickly access only the parameters needed for your application by storing them in a custom parameter group. Add your frequently used parameters to this group, then hide all other parameters with A552 [Program Lock] to simplify your drive configuration process.

Up to 100 parameters can be stored in the CustomView parameter group. You can copy one entire AppView parameter group to the CustomView parameter group as shown on page 150 or add individual parameters as show below.

Step		Key(s)	Example Displays
1.	Press the Up Arrow or Down Arrow to scroll to the CustomView group (GC).	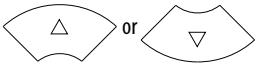	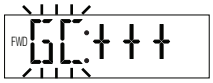
2.	Press Enter to view the parameters that can be added to the CustomView group.		
3.	Press the Up Arrow or Down Arrow to scroll through the list of parameters.	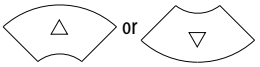	
4.	Press Enter to add the parameter to the CustomView group. The LCD display will show a confirmation.	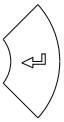	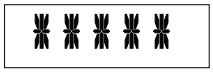

To delete parameters from the CustomView parameter group:

Step		Key(s)	Example Displays
1.	Press the Up Arrow or Down Arrow to scroll to the CustomView group (GC).	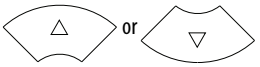	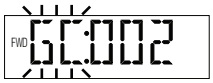
2.	Press Enter to view the parameters that are in the CustomView group.	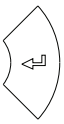	
3.	Press the Up Arrow or Down Arrow to scroll to the command GC---.	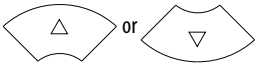	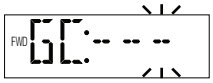
4.	Press Enter or Sel to view the parameters that are stored in the CustomView group.	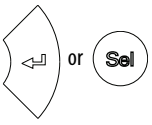	
5.	Press the Up Arrow or Down Arrow to scroll through the list of parameters.	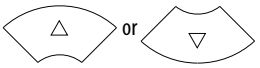	
6.	Press Enter to delete the parameter from the CustomView group. The LCD display will show a confirmation.		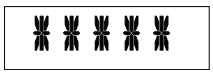

TIP The Connected Components Workbench software can be used to speed up this process with drag and drop functionality.

Parameter Cross Reference by Name

Parameter Name	No.
10V Bipolar Enbl[1]	093
2-Wire Mode	064
Accel Time 1	041
Accel Time 2	442
Accel Time 3	444
Accel Time 4	446
Accum CO2 Sav	026
Accum Cost Sav	025
Accum kWh Sav	024
Analog In 0-10V	360
Analog In 4-20mA	361
Analog In Filter	099
Analog Out High[2]	089
Analog Out Sel[2]	088
Anlg In 0-10V Hi	092
Anlg In 0-10V Lo	091
Anlg In mA Loss	097
Anlg In V Loss	094
Anlg In4-20mA Hi	096
Anlg In4-20mA Lo	095
Anlg Loss Delay	098
Anlg Out Setpt[2]	090
Auto Rstrt Delay	542
Auto Rstrt Tries	541
Autotune	040
Average kWh Cost	052
Average Power	020
Boost Select	530
Break Frequency	533
Break Voltage	532
Bus Reg Enable	550
Cmd Stat Select[1]	122
Com Sts-Emb Enet[1]	683
Comm Loss Action	125
Comm Loss Time	126
Comm Sts - DSI	681
Comm Sts - Opt	682
Comm Write Mode	121
Commanded Freq	002
Compensation	547
Contrl In Status	013
Control Source	012
Control SW Ver	029
Control Temp	028
Counter Status	364
Counts Per Unit[1]	559
Current Limit 1	484
Current Limit 2[1]	485
Current Loop BW[1][3]	580
DB Resistor Sel	437
DB Threshold	438
DC Brake Level	435
DC Brake Time	434
DC Brk Time@Strt	436
DC Bus Ripple	380
DC Bus Voltage	005
Decel Time 1	042
Decel Time 2	443
Decel Time 3	445
Decel Time 4	447
Dig In Status	014
Dig Out Status[2][3]	394
DigIn TermBlk 02	062
DigIn TermBlk 03	063
DigIn TermBlk 05	065
DigIn TermBlk 06	066
DigIn TermBlk 07[1]	067
DigIn TermBlk 08[1]	068
Drive OL Mode	495
Drive Status	006
Drive Status 2[2][3]	393
Drive Temp	027
Drive Type	367
Droop Hertz@ FLA[1]	441
Drv 0 Feedback	708
Drv 0 Logic Cmd	705
Drv 0 Logic Sts	707
Drv 0 Reference	706
Drv 1 Addr	171
Drv 1 Feedback	712
Drv 1 Logic Cmd	709
Drv 1 Logic Sts	711
Drv 1 Reference	710
Drv 2 Addr	172
Drv 2 Feedback	716
Drv 2 Logic Cmd	713
Drv 2 Logic Sts	715
Drv 2 Reference	714
Drv 3 Addr	173
Drv 3 Feedback	720
Drv 3 Logic Cmd	717
Drv 3 Logic Sts	719
Drv 3 Reference	718
Drv 4 Addr	174
Drv 4 Feedback	724
Drv 4 Logic Cmd	721
Drv 4 Logic Sts	723
Drv 4 Reference	722
Drv Ambient Sel	554
DSI Errors	731
DSI I/O Act	686
DSI I/O Cfg	175
Elapsed kWh	021
Elapsed MWh	022
Elapsed Run Time	019
Elapsed Time-hr	362
Elapsed Time-min	363
EM Brk Off Delay	086
EM Brk On Delay	087
EN Addr Sel[1]	128
EN Addr Src[1]	684
EN Comm Flt Actn[1]	143
EN Data In 1[1]	153
EN Data In 2[1]	154
EN Data In 3[1]	155
EN Data In 4[1]	156
EN Data Out 1[1]	157
EN Data Out 2[1]	158
EN Data Out 3[1]	159
EN Data Out 4[1]	160
EN Flt Cfg DL 1[1]	147
EN Flt Cfg DL 2[1]	148
EN Flt Cfg DL 3[1]	149
EN Flt Cfg DL 4[1]	150
EN Flt Cfg Logic[1]	145
EN Flt Cfg Ref[1]	146
EN Gateway Act 1[1]	701
EN Gateway Act 2[1]	702
EN Gateway Act 3[1]	703
EN Gateway Act 4[1]	704
EN Gateway Cfg 1[1]	137
EN Gateway Cfg 2[1]	138
EN Gateway Cfg 3[1]	139
EN Gateway Cfg 4[1]	140
EN Idle Flt Actn[1]	144
EN IP Addr Act 1[1]	693
EN IP Addr Act 2[1]	694
EN IP Addr Act 3[1]	695
EN IP Addr Act 4[1]	696
EN IP Addr Cfg 1[1]	129
EN IP Addr Cfg 2[1]	130
EN IP Addr Cfg 3[1]	131
EN IP Addr Cfg 4[1]	132
EN Missed IO Pkt[1]	730

Parameter Name	No.
EN Rate Act[1]	685
EN Rate Cfg[1]	141
EN Rx Errors[1]	727
EN Rx Overruns[1]	725
EN Rx Packets[1]	726
EN Subnet Act 1[1]	697
EN Subnet Act 2[1]	698
EN Subnet Act 3[1]	699
EN Subnet Act 4[1]	700
EN Subnet Cfg 1[1]	133
EN Subnet Cfg 2[1]	134
EN Subnet Cfg 3[1]	135
EN Subnet Cfg 4[1]	136
EN Tx Errors[1]	729
EN Tx Packets[1]	728
Encoder Pos Tol[1]	564
Encoder PPR[1]	536
Encoder Speed[2]	378
Energy Saved	023
Enh Control Word[1]	560
Fault 1 BusVolts	651
Fault 1 Code	007
Fault 1 Current	641
Fault 1 Freq	631
Fault 1 Time-hr	611
Fault 1 Time-min	621
Fault 2 BusVolts	652
Fault 2 Code	008
Fault 2 Current	642
Fault 2 Freq	632
Fault 2 Time-hr	612
Fault 2 Time-min	622
Fault 3 BusVolts	653
Fault 3 Code	009
Fault 3 Current	643
Fault 3 Freq	633
Fault 3 Time-hr	613
Fault 3 Time-min	623
Fault 4 BusVolts	654
Fault 4 Code	604
Fault 4 Current	644
Fault 4 Freq	634
Fault 4 Time-hr	614
Fault 4 Time-min	624
Fault 5 BusVolts	655
Fault 5 Code	605
Fault 5 Current	645
Fault 5 Freq	635
Fault 5 Time-hr	615
Fault 5 Time-min	625

Parameter Name	No.
Fault 6 BusVolts[1]	656
Fault 6 Code[1]	606
Fault 6 Current[1]	646
Fault 6 Freq[1]	636
Fault 6 Time-hr[1]	616
Fault 6 Time-min[1]	626
Fault 7 BusVolts[1]	657
Fault 7 Code[1]	607
Fault 7 Current[1]	647
Fault 7 Freq[1]	637
Fault 7 Time-hr[1]	617
Fault 7 Time-min[1]	627
Fault 8 BusVolts[1]	658
Fault 8 Code[1]	608
Fault 8 Current[1]	648
Fault 8 Freq[1]	638
Fault 8 Time-hr[1]	618
Fault 8 Time-min[1]	628
Fault 9 BusVolts[1]	659
Fault 9 Code[1]	609
Fault 9 Current[1]	649
Fault 9 Freq[1]	639
Fault 9 Time-hr[1]	619
Fault 9 Time-min[1]	629
Fault Clear	551
Fault10 BusVolts[1]	660
Fault10 Code[1]	610
Fault10 Current[1]	650
Fault10 Freq[1]	640
Fault10 Time-hr[1]	620
Fault10 Time-min[1]	630
Fiber Status	390
Find Home Dir[1]	563
Find Home Freq[1]	562
Flux Braking En[2][3]	575
Flux Current Ref	497
Flying Start En	545
FlyStrt CurLimit	546
Freq 1[1]	510
Freq 1 BW[1]	511
Freq 1 Ki[1]	522
Freq 1 Kp[1]	521
Freq 2[1]	512
Freq 2 BW[1]	513
Freq 2 Ki[1]	524
Freq 2 Kp[1]	523
Freq 3[1]	514
Freq 3 BW[1]	515
Freq 3 Ki[1]	526
Freq 3 Kp[1]	525

Parameter Name	No.
Half Bus Enable	549
Home Save[1]	561
HW Addr 1[1]	687
HW Addr 2[1]	688
HW Addr 3[1]	689
HW Addr 4[1]	690
HW Addr 5[1]	691
HW Addr 6[1]	692
IR Voltage Drop	496
Jog Accel/Decel	432
Jog Frequency	431
Keypad Freq	426
Ki Speed Loop[2]	538
Kp Speed Loop[2]	539
Language	30
Load Loss Level[1]	490
Load Loss Time[1]	491
Max Traverse	567
Maximum Freq	044
Maximum Voltage	534
Minimum Freq	043
MOP Freq	427
MOP Preload	429
MOP Reset Sel	428
MOP Time	430
Motor Fdbk Type[2]	535
Motor Lm[1]	499
Motor Lx[1]	500
Motor NP FLA	034
Motor NP Hertz	032
Motor NP Poles	035
Motor NP Power[1]	037
Motor NP RPM	036
Motor NP Volts	031
Motor OL Current	033
Motor OL Level	369
Motor OL Ret	494
Motor OL Select	493
Motor Rr[1]	498
Mtr Options Cfg[2][5]	573
MultiDrv Sel	169
Opt Data In 1	161
Opt Data In 2	162
Opt Data In 3	163
Opt Data In 4	164
Opt Data Out 1	165
Opt Data Out 2	166
Opt Data Out 3	167
Opt Data Out 4	168
Opto Out Logic[1]	075

Parameter Name	No.
Opto Out1 Level[1]	070
Opto Out1 Sel[1]	069
Opto Out2 Level[1]	073
Opto Out2 Sel[1]	072
Out Phas Loss En	557
Output Current	003
Output Freq	001
Output Power	017
Output Powr Fctr	381
Output RPM	015
Output Speed	016
Output Voltage	004
P Jump	570
Phase Loss Level[2][3]	576
PID 1 Deadband	465
PID 1 Diff Rate	463
PID 1 Fdback Sel	460
PID 1 Integ Time	462
PID 1 Invert Err	467
PID 1 Preload	466
PID 1 Prop Gain	461
PID 1 Ref Sel	459
PID 1 Setpoint	464
PID 1 Trim Hi	456
PID 1 Trim Lo	457
PID 1 Trim Sel	458
PID1 Fdbk Displ	383
PID1 Setpnt Disp	384
PID 2 Deadband[1]	477
PID 2 Diff Rate[1]	475
PID 2 Fdback Sel[1]	472
PID 2 Integ Time[1]	474
PID 2 Invert Err[1]	479
PID 2 Preload[1]	478
PID 2 Prop Gain[1]	473
PID 2 Ref Sel[1]	471
PID 2 Setpoint[1]	476
PID 2 Trim Hi[1]	468
PID 2 Trim Lo[1]	469
PID 2 Trim Sel[1]	470
PID2 Fdbk Displ[1]	385
PID2 Setpnt Disp[1]	386
PM 1 Efficiency[1][3]	587
PM 2 Efficiency[1][3]	588
PM Algor Sel[1][3]	589
PM Align Time[1][3]	518
PM BEMF Voltage[1][3]	504
PM Bus Reg Kd[1][3]	520
PM Control Cfg[1][3]	529
PM DC Inject Cur[1][3]	517
PM FWKn 1 Kp[1][3]	527
PM FWKn 2 Kp[1][3]	528
PM HIFI NS Cur[1][3]	519
PM Initial Sel[1][3]	516
PM IR Voltage[1][3]	501
PM IXd Voltage[1][3]	502
PM IXq Voltage[1][3]	503
PM Stable 1 Freq[1][3]	581
PM Stable 1 Kp[1][3]	583
PM Stable 2 Freq[1][3]	582
PM Stable 2 Kp[1][3]	584
PM Stable Brk Pt[1][3]	585
PM Steploat Kp[1][3]	586
Pos Reg Filter[1]	565
Pos Reg Gain[1]	566
Position Status[1]	387
Positioning Mode[1]	558
Power Loss Mode	548
Power Saved	018
Preset Freq 0	410
Preset Freq 1	411
Preset Freq 2	412
Preset Freq 3	413
Preset Freq 4	414
Preset Freq 5	415
Preset Freq 6	416
Preset Freq 7	417
Preset Freq 8[1]	418
Preset Freq 9[1]	419
Preset Freq 10[1]	420
Preset Freq 11[1]	421
Preset Freq 12[1]	422
Preset Freq 13[1]	423
Preset Freq 14[1]	424
Preset Freq 15[1]	425
Process Disp Hi	482
Process Disp Lo	481
Process Display	010
Program Lock	552
Program Lock Mod	553
Pulse In Scale	537
Purge Frequency	433
PWM Frequency	440
RdyBit Mode Act[2][4]	392
RdyBit Mode Cfg[2][4]	574
Relay 1 Off Time	080
Relay 1 On Time	079
Relay Out1 Level	077
Relay Out1 Sel	076
Relay 2 Off Time[1]	085
Relay 2 On Time[1]	084
Relay Out2 Level[1]	082
Relay Out2 Sel[1]	081
Reset Meters	555
Reset to Defalts	053
Reverse Disable	544
RS485 Data Rate	123
RS485 Format	127
RS485 Node Addr	124
S Curve %	439
Safety Open En[1]	105
SafetyFlt RstCfg[1][3]	106
Shear Pin 1 Time	487
Shear Pin1 Level	486
Shear Pin 2 Time[1]	489
Shear Pin2 Level[1]	488
Skip Freq Band 1	449
Skip Freq Band 2	451
Skip Freq Band 3[1]	453
Skip Freq Band 4[1]	455
Skip Frequency 1	448
Skip Frequency 2	450
Skip Frequency 3[1]	452
Skip Frequency 4[1]	454
Sleep Level	101
Sleep Time	102
Sleep-Wake Sel	100
Slip Hz Meter	375
Speed Feedback	376
Speed Ratio	572
Speed Reference1	047
Speed Reference2	049
Speed Reference3	051
Speed Reg Sel[1]	509
Stall Fault Time	492
Start At PowerUp	543
Start Boost	531
Start Source 1	046
Start Source 2	048
Start Source 3	050
Status @ Fault 1	661
Status @ Fault 2	662
Status @ Fault 3	663
Status @ Fault 4	664
Status @ Fault 5	665
Status @ Fault 6[1]	666
Status @ Fault 7[1]	667
Status @ Fault 8[1]	668
Status @ Fault 9[1]	669
Status @ Fault10[1]	670

Parameter Name	No.
Step Units 0[1]	200
Step Units 1[1]	202
Step Units 2[1]	204
Step Units 3[1]	206
Step Units 4[1]	208
Step Units 5[1]	210
Step Units 6[1]	212
Step Units 7[1]	214
Stop Mode	045
Stp Logic 0[1]	180
Stp Logic 1[1]	181
Stp Logic 2[1]	182
Stp Logic 3[1]	183
Stp Logic 4[1]	184

Parameter Name	No.
Stp Logic 5[1]	185
Stp Logic 6[1]	186
Stp Logic 7[1]	187
Stp Logic Status[1]	391
Stp Logic Time 0[1]	190
Stp Logic Time 1[1]	191
Stp Logic Time 2[1]	192
Stp Logic Time 3[1]	193
Stp Logic Time 4[1]	194
Stp Logic Time 5[1]	195
Stp Logic Time 6[1]	196
Stp Logic Time 7[1]	197
Sync Time	571
Testpoint Data	368

Parameter Name	No.
Testpoint Sel	483
Text Scroll	556
Timer Status	365
Torque Current	382
Torque Perf Mode	039
Traverse Dec	569
Traverse Inc	568
Units Traveled H[1]	388
Units Traveled L[1]	389
Var PWM Disable	540
Voltage Class	038
Wake Level	103
Wake Time	104

(1) Parameter is specific to PowerFlex 525 drives only.
(2) Parameter is also available in PowerFlex 523 FRN 3.xxx and later.
(3) Parameter is available in PowerFlex 525 FRN 5.xxx and later.
(4) Parameter is available in PowerFlex 525 FRN 3.xxx and later.
(5) Parameter is available in PowerFlex 525 FRN 2.xxx and later.

Notes:

Troubleshooting

This chapter provides information to guide you in troubleshooting the PowerFlex 520-series drive. Included is a listing and description of drive faults with possible solutions, when applicable.

For information on...	See page...
Drive Status	157
Faults	157
Fault Descriptions	159
Common Symptoms and Corrective Actions	162

ATTENTION: Risk of injury or equipment damage exists. Drive does not contain user-serviceable components. Do not disassemble drive chassis.

Drive Status

The condition or state of your drive is constantly monitored. Any changes will be indicated through the integral LCD display.

See Display and Control Keys on page 62 for information on drive status indicators and controls.

Faults

A fault is a condition that stops the drive. There are two fault types.

Fault Types

Type	Fault Description	
1	Auto-Reset/Run	When this type of fault occurs, and A541 [Auto Rstrt Tries] is set to a value greater than "0," a user-configurable timer, A542 [Auto Rstrt Delay], begins. When the timer reaches zero, the drive attempts to automatically reset the fault. If the condition that caused the fault is no longer present, the fault will be reset and the drive will be restarted.
2	Non-Resettable	This type of fault may require drive or motor repair, or is caused by wiring or programming errors. The cause of the fault must be corrected before the fault can be cleared.

Fault Indication

Condition	Display
Drive is indicating a fault. The integral LCD display provides visual notification of a fault condition by displaying the following. • Flashing fault number • Flashing fault indicator (LED) Press the Esc key to regain control of the display.	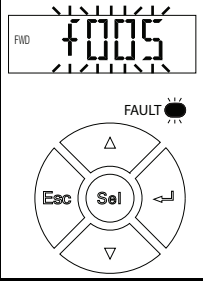

Manually Clearing Faults

Step	Key(s)
1. Press Esc to acknowledge the fault. The fault information will be removed so that you can use the integral keypad. Access b007 [Fault 1 Code] to view the most recent fault information. 2. Address the condition that caused the fault. The cause must be corrected before the fault can be cleared. See Fault Types, Descriptions and Actions on page 159. 3. After corrective action has been taken, clear the fault by one of these methods. • Press Stop if P045 [Stop Mode] is set to a value between "0" and "3". • Cycle drive power. • Set A551 [Fault Clear] to 1 "Reset Fault" or 2 "Clear Buffer". • Cycle digital input if t062, t063, t065...t068 [DigIn TermBlk xx] is set to 13 "Clear Fault".	

Automatically Clearing Faults

Option/Step	
Clear a Type 1 fault and restart the drive. 1. Set A541 [Auto Rstrt Tries] to a value other than "0". 2. Set A542 [Auto Rstrt Delay] to a value other than "0". **Clear an OverVoltage, UnderVoltage or Heatsink OvrTmp fault without restarting the drive.** 1. Set A541 [Auto Rstrt Tries] to a value other than "0". 2. Set A542 [Auto Rstrt Delay] to "0".	

ATTENTION: Equipment damage and/or personal injury may result if these parameters are used in an inappropriate application. Do not use this function without considering applicable local, national and international codes, standards, regulations or industry guidelines.

Auto Restart (Reset/Run)

The Auto Restart feature provides the ability for the drive to automatically perform a fault reset followed by a start attempt without user or application intervention. This allows remote or "unattended" operation. Only certain faults are allowed to be reset. Certain faults (Type 2) that indicate possible drive component malfunction are not resettable. Fault types are listed in the table Fault Types on page 157. See Fault Descriptions on page 159 for more information.

Use caution when enabling this feature, since the drive will attempt to issue its own start command based on user selected programming.

Fault Descriptions

Fault Types, Descriptions and Actions

No.	Fault	Type[2]	Description	Action
F000	No Fault	–	No fault present.	–
F002	Auxiliary Input	1	External trip (Auxiliary) input.	• Check remote wiring. • Verify communications programming for intentional fault.
F003	Power Loss	2	Single phase operation detected with excessive load.	• Monitor the incoming AC line for low voltage or line power interruption. • Check input fuses. • Reduce load.
F004	UnderVoltage	1	DC bus voltage fell below the minimum value.	Monitor the incoming AC line for low voltage or line power interruption.
F005	OverVoltage	1	DC bus voltage exceeded maximum value.	Monitor the AC line for high line voltage or transient conditions. Bus overvoltage can also be caused by motor regeneration. Extend the decel time or install dynamic brake option.
F006	Motor Stalled	1	Drive is unable to accelerate or decelerate motor.	• Increase P041, A442, A444, A446 [Accel Time x] or reduce load so drive output current does not exceed the current set by parameter A484, A485 [Current Limit x] for too long. • Check for overhauling load.
F007	Motor Overload	1	Internal electronic overload trip.	• An excessive motor load exists. Reduce load so drive output current does not exceed the current set by parameter P033 [Motor OL Current]. • Verify A530 [Boost Select] setting.
F008	Heatsink OvrTmp	1	Heatsink/Power Module temperature exceeds a predefined value.	• Check for blocked or dirty heat sink fins. Verify that ambient temperature has not exceeded the rated ambient temperature. • Check fan.
F009	CC OvrTmp	1	Control module temperature exceeds a predefined value.	• Check product ambient temperature. • Check for airflow obstruction. • Check for dirt or debris. • Check fan.
F012	HW OverCurrent	2	The drive output current has exceeded the hardware current limit.	Check programming. Check for excess load, improper A530 [Boost Select] setting, DC brake volts set too high or other causes of excess current.
F013	Ground Fault	1[3]	A current path to earth ground has been detected at one or more of the drive output terminals.	Check the motor and external wiring to the drive output terminals for a grounded condition.

Fault Types, Descriptions and Actions

No.	Fault	Type[2]	Description	Action
F015[1]	Load Loss	2	The output torque current is below the value programmed in A490 [Load Loss Level] for a time period greater than the time programmed in A491 [Load Loss Time].	• Verify connections between motor and load. • Verify level and time requirements
F021	Output Ph Loss	1	Output Phase Loss (if enabled). Configure with A557 [Out Phas Loss En].	• Verify motor wiring. • Verify motor.
F029	Analog In Loss	1	An analog input is configured to fault on signal loss. A signal loss has occurred. Configure with t094 [Anlg In V Loss] or t097 [Anlg In mA Loss].	• Check for broken/loose connections at inputs. • Check parameters.
F033	Auto Rstrt Tries	2	Drive unsuccessfully attempted to reset a fault and resume running for the programmed number of A541 [Auto Rstrt Tries].	Correct the cause of the fault and manually clear.
F038	Phase U to Gnd	2	A phase to ground fault has been detected between the drive and motor in this phase.	• Check the wiring between the drive and motor. • Check motor for grounded phase. • Replace drive if fault cannot be cleared.
F039	Phase V to Gnd			
F040	Phase W to Gnd			
F041	Phase UV Short	2	Excessive current has been detected between these two output terminals.	• Check the motor and drive output terminal wiring for a shorted condition. • Replace drive if fault cannot be cleared.
F042	Phase UW Short			
F043	Phase VW Short			
F048	Params Defaulted	1	The drive was commanded to write default values to EEPROM.	• Clear the fault or cycle power to the drive. • Program the drive parameters as needed.
F059[1]	Safety Open	1	Both of the safety inputs (Safety 1, Safety 2) are not enabled. Configure with t105 [Safety Open En].	• Check safety input signals. If not using safety, verify and tighten jumper for I/O terminals S1, S2 and S+.
F063	SW OverCurrent	1	Programmed A486, A488 [Shear Pinx Level] has been exceeded for a time period greater than the time programmed in A487, A489 [Shear Pin x Time].	• Verify connections between motor and load. • Verify level and time requirements.
F064	Drive Overload	2	Drive overload rating has been exceeded.	Reduce load or extend Accel Time.
F070	Power Unit	2	Failure has been detected in the drive power section.	• Check maximum ambient temperature has not been exceeded. • Cycle power. • Replace drive if fault cannot be cleared.
F071	DSI Net Loss	2	Control over the Modbus or DSI communication link has been interrupted.	• Cycle power. • Check communications cabling. • Check Modbus or DSI setting. • Check Modbus or DSI status.
F072	Opt Net Loss	2	Control over the network option card's remote network has been interrupted.	• Cycle power. • Check communications cabling. • Check network adapter setting. • Check external network status.
F073[1]	EN Net Loss	2	Control through the embedded EtherNet/IP adapter has been interrupted.	• Cycle power. • Check communications cabling. • Check EtherNet/IP setting. • Check external network status.
F080	Autotune Failure	2	The autotune function was either cancelled by the user or failed.	Restart procedure.

Fault Types, Descriptions and Actions

No.	Fault	Type[2]	Description	Action
F081	DSI Comm Loss	2	Communications between the drive and the Modbus or DSI master device have been interrupted.	• Cycle power. • Check communications cabling. • Check Modbus or DSI setting. • Check Modbus or DSI status. • Modify using C125 [Comm Loss Action]. • Connecting I/O terminals C1 and C2 to ground may improve noise immunity. • Replace wiring, Modbus master device, or control module.
F082	Opt Comm Loss	2	Communications between the drive and the network option card have been interrupted.	• Cycle power. • Reinstall option card in drive. • Modify using C125 [Comm Loss Action]. • Replace wiring, port expander, option card, or control module.
F083[1]	EN Comm Loss	2	Internal communications between the drive and the embedded EtherNet/IP adapter have been interrupted.	• Cycle power. • Check EtherNet/IP setting. • Check drive's Ethernet settings and diagnostic parameters. • Modify using C125 [Comm Loss Action]. • Replace wiring, Ethernet switch, or control module.
F091[1]	Encoder Loss	2	Requires differential encoder. One of the 2 encoder channel signals is missing.	• Check Wiring. • If P047, P049, P051 [Speed Referencex] = 16 "Positioning" and A535 [Motor Fdbk Type] = 5 "Quad Check", swap the Encoder channel inputs or swap any two motor leads. • Replace encoder.
F094	Function Loss	2	"Freeze-Fire" (Function Loss) input is inactive, input to the programmed terminal is open.	Close input to the terminal and cycle power.
F100	Parameter Chksum	2	Drive parameter non-volatile storage is corrupted.	Set P053 [Reset To Defalts] to 2 "Factory Rset".
F101	External Storage	2	External non-volatile storage has failed.	Set P053 [Reset To Defalts] to 2 "Factory Rset".
F105	C Connect Err	2	Control module was disconnected while drive was powered.	Clear fault and verify all parameter settings. Do not remove or install the control module while power is applied.
F106	Incompat C-P	2	The PowerFlex 525 control module does not support power modules with 0.25 HP power rating.	• Change to a different power module. • Change to a PowerFlex 523 control module.
F107	Replaced C-P	2	The control module could not recognize the power module. Hardware failure.	• Change to a different power module. • Replace control module if changing power module does not work.
F109	Mismatch C-P	2	The control module was mounted to a different drive type power module.	Set P053 [Reset To Defalts] to 3 "Power Reset".
F110	Keypad Membrane	2	Keypad membrane failure / disconnected.	• Cycle power. • Replace control module if fault cannot be cleared.
F111[1]	Safety Hardware	2	Safety input enable hardware malfunction. One of the safety inputs is not enabled.	• Check safety input signals. If not using safety, verify and tighten jumper for I/O terminals S1, S2 and S+. • Replace control module if fault cannot be cleared.

Fault Types, Descriptions and Actions

No.	Fault	Type[2]	Description	Action
F114	uC Failure	2	Microprocessor failure.	• Cycle power. • Verify grounding requirements. See General Grounding Requirements on page 20 for more information. • Replace control module if fault cannot be cleared.
F122	I/O Board Fail	2	Failure has been detected in the drive control and I/O section.	• Cycle power. • Replace drive or control module if fault cannot be cleared.
F125	Flash Update Req	2	The firmware in the drive is corrupt, mismatched, or incompatible with the hardware.	Perform a firmware flash update operation to attempt to load a valid set of firmware.
F126	NonRecoverablErr	2	A non-recoverable firmware or hardware error was detected. The drive was automatically stopped and reset.	• Clear fault or cycle power to the drive. • Replace drive or control module if fault cannot be cleared.
F127	DSIFlashUpdatReq	2	A critical problem with the firmware was detected and the drive is running using backup firmware that only supports DSI communications.	Perform a firmware flash update operation using DSI communications to attempt to load a valid set of firmware.

(1) This fault is not applicable to PowerFlex 523 drives.
(2) See Fault Types for more information.
(3) This fault may be cleared by the auto-restart routine and will be attempted only once. It ignores the value set in parameter A541 [Auto Rstrt Tries].

Common Symptoms and Corrective Actions

The drive is designed to start from the keypad when shipped. For a basic test of drive operation:

1. Remove all user I/O wire.
2. Verify safety terminals (S1, S2 and S+) jumper is in place and tightened.
3. Verify wire jumper is in place between I/O terminals 01 and 11.
4. Verify that the three jumpers are in their proper default positions on the control board. See PowerFlex 525 Control I/O Wiring Block Diagram on page 42 for more information.
5. Reset default parameter values by setting P053 [Reset Defalts] to 2 “Factory Rset”.
6. If safe to do so for your application, press Start on drive keypad. Drive will run according to the speed potentiometer.

Motor does not Start.

Cause(s)	Indication	Corrective Action
No output voltage to the motor.	None	Check the power circuit. • Check the supply voltage. • Check all fuses and disconnects. Check the motor. • Verify that the motor is connected properly. Check the control input signals. • Verify that a Start signal is present. If 2-Wire control is used, verify that either the Run Forward or Run Reverse signal is active, but not both. • Verify that I/O Terminal 01 is active. • Verify that P046, P048, P050 [Start Source x] matches your configuration. • Verify that A544 [Reverse Disable] is not prohibiting movement. • Verify that safety inputs (Safety 1 and Safety 2) are active.
Improper boost setting at initial start-up.	None	Set A530 [Boost Select] to 2 "35.0, VT".
Drive is Faulted	Flashing red status light	Clear fault. • Press Stop if P045 [Stop Mode] is set to a value between "0" and "3". • Cycle drive power. • Set A551 [Fault Clear] to 1 "Reset Fault" or 2 "Clear Buffer". • Cycle digital input if t062, t063, t065...t068 [DigIn TermBlk xx] is set to 13 "Clear Fault".
Incorrect programming. • P046, P048, P050 [Start Source x] is set incorrectly.	None	Check setting for b012 [Control Source].
Incorrect input wiring. See page 45 for wiring examples. • 2 wire control requires Run Forward, Run Reverse or Jog input. • 3 wire control requires Start and Stop inputs • Stop input is always required.	None	• Wire inputs correctly and/or install jumper. • If the PowerFlex 525 Safe-Torque-Off function is used, verify that inputs are active. • If 2-wire or 3-wire mode is used, verify that t062 [DigIn TermBlk 02] and t063 [DigIn TermBlk 03] are set properly.
Incorrect Sink/Source jumper setting.	None	Set switch to match wiring scheme.

Drive does not Start from Start or Run Inputs wired to the terminal block.

Cause(s)	Indication	Corrective Action
Drive is Faulted	Flashing red status light	Clear fault. • Press Stop if P045 [Stop Mode] is set to a value between "0" and "3". • Cycle drive power. • Set A551 [Fault Clear] to 1 "Reset Fault" or 2 "Clear Buffer". • Cycle digital input if t062, t063, t065...t068 [DigIn TermBlk xx] is set to 13 "Clear Fault".
Incorrect programming. • P046, P048, P050 [Start Source x] is set incorrectly. • t062, t063 [DigIn TermBlk 02/03] is set incorrectly.	None	Check parameter settings.
Incorrect input wiring. See page 45 for wiring examples. • 2 wire control requires Run Forward, Run Reverse or Jog input. • 3 wire control requires Start and Stop inputs • Stop input is always required.	None	• Wire inputs correctly and/or install jumper. • If the PowerFlex 525 Safe-Torque-Off function is used, verify that inputs are active.
Incorrect Sink/Source jumper setting.	None	Set switch to match wiring scheme.

Drive does not respond to changes in speed command.

Cause(s)	Indication	Corrective Action
No value is coming from the source of the command.	The drive "Run" indicator is lit and output is 0 Hz.	• Check b012 [Control Source] for correct source. • If the source is an analog input, check wiring and use a meter to check for presence of signal. • Check b002 [Commanded Freq] to verify correct command.
Incorrect reference source is being selected by remote device or digital inputs.	None	• Check b012 [Control Source] for correct source. • Check b014 [Dig In Status] to see if inputs are selecting an alternate source. Verify settings for t062, t063, t065-t068 [DigIn TermBlk xx]. • Check P047, P049, P051 [Speed Referencex] for the source of the speed reference. Reprogram as necessary. • Review the Speed Reference Control chart on page 49. • Verify communications if used.

Motor and/or drive will not accelerate to commanded speed.

Cause(s)	Indication	Corrective Action
Acceleration time is excessive.	None	Reprogram P041, A442, A444, A446 [Accel Time x].
Excess load or short acceleration times force the drive into current limit, slowing or stopping acceleration.	None	• Compare b003 [Output Current] with A484, A485 [Current Limit x]. • Remove excess load or reprogram P041, A442, A444, A446 [Accel Time x]. • Check for improper A530 [Boost Select] setting.
Speed command source or value is not as expected.	None	• Verify b002 [Commanded Freq]. • Check b012 [Control Source] for the proper Speed Command.
Programming is preventing the drive output from exceeding limiting values.	None	• Check P044 [Maximum Freq] to ensure that speed is not limited by programming. • Verify programming of A572 [Speed Ratio].
Torque performance does not match motor characteristics.	None	• Set motor nameplate full load amps in parameter P034 [Motor NP FLA]. • Perform P040 [Autotune] "Static Tune" or "Rotate Tune" procedure. • Set P039 [Torque Perf Mode] to 0 "V/Hz".

Motor operation is unstable.

Cause(s)	Indication	Corrective Action
Motor data was incorrectly entered.	None	1. Correctly enter motor nameplate data into P031, P032 and P033. 2. Enable A547 [Compensation]. 3. Use A530 [Boost Select] to reduce boost level.

Drive will not reverse motor direction.

Cause(s)	Indication	Corrective Action
Reverse is disabled.	None	Check A544 [Reverse Disable].
Digital input is not selected for reversing control.	None	Check [DigIn TermBlk xx] (See page 89). Choose correct input and program for reversing mode.
Digital input is incorrectly wired.	None	Check input wiring (See page 45).
Motor wiring is improperly phased for reverse.	None	Switch two motor leads.

Drive does not power up.

Cause(s)	Indication	Corrective Action
No input power to drive.	None	• Check the power circuit. • Check the supply voltage. • Check all fuses and disconnects.
Control module is not connected properly to power module.	None	1. Remove power. 2. Verify that the control module is properly and fully installed on the power module. 3. Reapply power.

Motor is rotating at zero Hz or slip frequency is not correct.

Cause(s)	Indication	Corrective Action
Incorrect speed calculation.	Improper speed.	• Verify P032 [Motor NP Hertz]. • Reduce boost with A530 [Boost Select]. • Set P036 [Motor NP RPM] to motor synchronous speed.

Notes:

Supplemental Drive Information

For information on...	See page...
Certifications	167
Environmental Specifications	168
Technical Specifications	169
Power Specifications	172

Certifications

Certifications	PowerFlex 523	PowerFlex 525
c-UL-us	Listed to UL508C and CAN/CSA-C22.2 No. 14-05.	
RCM	Australian Communications and Media Authority In conformity with the following: Radiocommunications Act: 1992 Radiocommunications Standard: 2008 Radiocommunications Labelling Notice: 2008 Standards applied: EN 61800-3	
CE	In conformity with the following European Directives: 2014/35/EU Low Voltage Directive (LVD) 2014/30/EU EMC Directive (EMC) 2014/34/EU ATEX Directive (ATEX) 2006/42/EC Machinery Directive (MD) Standards applied: EN 61800-3 EN 61800-5-1	
TUV	(Applicable to PowerFlex 525 drives only) TÜV Rheinland Standards applied: EN ISO 13849-1 EN 61800-5-2 EN 61508 PARTS 1-7 EN 62061 EN 60204-1 Certified to ISO 13849-1 SIL2/PLd with embedded Safe-Torque-Off function Meets Functional Safety (FS) when used with embedded Safe-Torque-Off function	
ATEX **II (2) G D** **TUV 12 ATEX 7199 X**	(Applicable to PowerFlex 525 drives only) Certified to ATEX Directive 2014/34/EU Group II Category (2) GD Applications with ATEX Approved Motors	
KCC	Korean Registration of Broadcasting and Communications Equipment Compliant with the following standards: Article 58-2 of Radio Waves Act, Clause 3	
EAC	Standards applied: Low Voltage TP TC 004/2011 EMC TP TC 020/2011	

Certifications	PowerFlex 523	PowerFlex 525
AC 156	Tested by Trentec to be compliant with AC156 Acceptance Criteria for Seismic Qualification Testing of Nonstructural Components and 2003 International Building Code for worst-case seismic level for USA excluding site class F	
SEMI F47	Electric Power Research Institute Certified compliant with the following standards: SEMI F47 IEC 61000-4-11 IEC 61000-4-34	
Lloyds Register	(Applicable to PowerFlex 525 drives only) Lloyd's Register Type Approval Certificate 12/10068(E1)	
RoHS	Compliant with the European "Restriction of Hazardous Substances" Directive	
The drive is also designed to meet the appropriate portions of the following specifications: NFPA 70 - US National Electrical Code NEMA ICS 7.1 - Safety standards for Construction and Guide for Selection, Installation and Operation of Adjustable Speed Drive Systems.		

Environmental Specifications

Specifications	PowerFlex 523	PowerFlex 525
Altitude: Without derating: With derating:	See Current Derating Curves on page 17 for derating guidelines. 1000 m (3300 ft) max. Up to 4000 m (13,200 ft) max., with the exception of 600V drives at 2000 m (6600 ft) max.	
Max. Surrounding Air Temperature Without derating: With derating:	See Current Derating Curves on page 17 for derating guidelines. -20...50 °C (-4...122 °F) -20...60 °C (-4...140 °F) or -20...70 °C (-4...158 °F) with optional Control Module Fan kit.	
Storage Temperature: Frame A...D: Frame E:	 -40...85 °C (-40...185 °F) -40...70 °C (-40...158 °F)	
Atmosphere:		

IMPORTANT Drive **must not** be installed in an area where the ambient atmosphere contains volatile or corrosive gas, vapors or dust. If the drive is not going to be installed for a period of time, it must be stored in an area where it will not be exposed to a corrosive atmosphere.

Relative Humidity:	0...95% noncondensing
Shock: Vibration:	Complies with IEC 60068-2-27 Complies with IEC 60068-2-6:1995

	Operating and Nonoperating		Nonoperating (Transportation)	
Frame Size	Force (Shock/Vibration)	Mounting Type	Force (Shock/Vibration)	Mounting Type
A	15 g / 2 g	DIN rail or screw	30 g/ 2.5 g	Screw only
B	15 g / 2 g	DIN rail or screw	30 g/ 2.5 g	Screw only
C	15 g / 2 g	DIN rail or screw	30 g/ 2.5 g	Screw only
D	15 g / 2 g	Screw only	30 g/ 2.5 g	Screw only
E	15 g / 1.5 g	Screw only	30 g/ 2.5 g	Screw only

Specifications	PowerFlex 523	PowerFlex 525
Conformal Coating:	Complies with: IEC 60721-3-3 to level 3C2 (chemical and gases only)	
Surrounding Environment Pollution Degree Pollution Degree 1 & 2:	See Pollution Degree Ratings According to EN 61800-5-1 on page 52 for descriptions. All enclosures acceptable.	
Sound Pressure Level (A-weighted) Frame A & B: Frame C: Frame D: Frame E:	Measurements are taken 1 m from the drive. Maximum 53 dBA Maximum 57 dBA Maximum 64 dBA Maximum 68 dBA	

Technical Specifications

Protection

Specifications	PowerFlex 523	PowerFlex 525
Bus Overvoltage Trip 100...120V AC Input: 200...240V AC Input: 380...480V AC Input: 525...600V AC Input:	 405V DC bus (equivalent to 150V AC incoming line) 405V DC bus (equivalent to 290V AC incoming line) 810V DC bus (equivalent to 575V AC incoming line) 1005V DC bus (equivalent to 711V AC incoming line)	
Bus Undervoltage Trip 100...120V AC Input: 200...240V AC Input: 380...480V AC Input: 525...600V AC Input P038 = 3 "600V": P038 = 2 "480V":	 190V DC bus (equivalent to 75V AC incoming line) 190V DC bus (equivalent to 150V AC incoming line) 390V DC bus (equivalent to 275V AC incoming line) 487V DC bus (equivalent to 344V AC incoming line) 390V DC bus (equivalent to 275V AC incoming line)	
Power Ride-Thru:	100 ms	
Logic Control Ride-Thru:	0.5 s minimum, 2 s typical	
Electronic Motor Overload Protection:	Provides class 10 motor overload protection according to NEC article 430 and motor over-temperature protection according to NEC article 430.126 (A) (2). UL 508C File 29572.	
Overcurrent:	200% hardware limit, 300% instantaneous fault	
Ground Fault Trip:	Phase-to-ground on drive output	
Short Circuit Trip:	Phase-to-phase on drive output	

Electrical

Specifications	PowerFlex 523	PowerFlex 525
Voltage Tolerance:	-15% / +10%	
Frequency Tolerance:	47...63 Hz	
Input Phases:	Three-phase input provides full rating. Single-phase input provides 35% rating on three-phase drives.	
Displacement Power Factor:	0.98 across entire speed range	
Maximum Short Circuit Rating:	100,000 Amps Symmetrical	
Actual Short Circuit Rating:	Determined by AIC Rating of installed fuse/circuit breaker	
Transistor Type:	Isolated Gate Bipolar Transistor (IGBT)	
Internal DC Bus Choke 200...240V AC Input: 380...480V AC Input: 525...600V AC Input:	Only for Frame E drive ratings 11 kW (15 HP) 15...18.5 kW (20...25 HP) – Heavy Duty 15...18.5 kW (20...25 HP) – Heavy Duty	

Control

Specifications	PowerFlex 523	PowerFlex 525
Method	Sinusoidal PWM, Volts/Hertz, Sensorless Vector Control, Economizer SVC motor control, Closed Loop Velocity Vector Control, Surface Mount and Interior Permanent Magnet Motor (without encoder), Interior Permanent Magnet Motor (with encoder) (Closed Loop Velocity Vector Control and PM motor control are not applicable to PowerFlex 523 drives)	
Carrier Frequency	2...16 kHz, Drive rating based on 4 kHz	
Frequency Accuracy		
Digital Input:	Within ±0.05% of set output frequency	
Analog Input:	Within 0.5% of maximum output frequency, 10-Bit resolution	
Analog Output:	±2% of full scale, 10-Bit resolution	
Performance		
V/Hz (Volts per Hertz):	±1% of base speed across a 60:1 speed range	
SVC (Sensorless Vector):	±0.5% of base speed across a 100:1 speed range	
SVC Economizer:	±0.5% of base speed across a 100:1 speed range	
	(Applicable to PowerFlex 525 drives only)	
VVC (Velocity Vector Control):	±0.5% of base speed across a 60:1 speed range	
PM Motor (1):	±0.5% of base speed, up to a 20:1 speed range	
Performance with Encoder	(Applicable to PowerFlex 525 drives only)	
SVC (Sensorless Vector):	±0.1% of base speed across a 100:1 speed range(2)	
SVC Economizer:	±0.1% of base speed across a 100:1 speed range(2)	
VVC (Velocity Vector Control):	±0.1% of base speed across a 1000:1 speed range(2)	
PM Motor (iPM motor, 10 HP rating and below) (1):	±0.1% of base speed, up to a 60:1 speed range	
Output Voltage Range:	0V to rated motor voltage	
Output Frequency Range:	0...500 Hz (programmable)	
Efficiency:	97.5% (typical)	
Stop Modes:	Multiple programmable stop modes including – Ramp, Coast, DC-Brake, and Ramp-to-Stop	
Accel/Decel:	Four independently programmable accel and decel times. Each time may be programmed from 0...600 s in 0.01 s increments.	
Intermittent Overload		
Normal Duty:	110% Overload capability for up to 60 s, 150% for up to 3 s Applies for power rating above 15 kW (20 HP) only. Based on 480V drive rating.	
Heavy Duty:	150% Overload capability for up to 60 s, 180% for up to 3 s (200% programmable)	

(1) For details on specific motor performance, see Knowledge Base article "PowerFlex 525 PM Motor Performance Testing Summary".

(2) For more information, see Determine Encoder Pulse Per Revolution (PPR) Specification Based on Speed Resolution on page 217.

Control Inputs

Specifications		PowerFlex 523	PowerFlex 525
Digital	Bandwidth:	10 Rad/s for open and closed loop	
	Quantity:	(1) Dedicated for stop (4) Programmable	(1) Dedicated for stop (6) Programmable
	Current:	6 mA	
	Type Source Mode (SRC): Sink Mode (SNK):	 18...24V = ON, 0...6V = OFF 0...6V = ON, 18...24V = OFF	
	Pulse Train Quantity: Input Signal: Input Frequency: Current Consumption:	 (1) Shared with one of the programmable digital input terminals. Transistor contact (open collector) 0...100 kHz 7 mA @ 24V DC maximum	
Analog:	Quantity:	(1) Isolated, 0-10V and 4-20mA	(2) Isolated, -10-10V and 4-20mA
	Specification Resolution: 0-10V DC Analog: 4-20mA Analog: External Pot:	 10-bit 100k ohm input impedance 250 ohm input impedance 1...10k ohm, 2 W minimum	

Control Outputs

Specifications		PowerFlex 523	PowerFlex 525
Relay:	Quantity:	(1) Programmable Form C	(2) 1 Programmable Form A and 1 Programmable Form B
	Specification Resistive Rating: Inductive Rating:	 3.0 A @ 30V DC, 3.0 A @ 125V, 3.0 A @ 240V AC 0.5 A @ 30V DC, 0.5 A @ 125V, 0.5 A @ 240V AC	
Opto:	Quantity:	–	(2) Programmable
	Specification:		30V DC, 50 mA Non-inductive
Analog	Quantity:	(1) Non-Isolated 0-10V or 4-20 mA(1)	
	Specification Resolution: 0-10V DC Analog: 4-20 mA Analog:	 10-bit 1 k ohm minimum 525 ohm maximum	

(1) Feature is not applicable to PowerFlex 523 series A drives.

Encoder

Specifications	PowerFlex 523	PowerFlex 525
Type:	–	Incremental, dual channel
Supply:		12V, 250 mA
Quadrature:		90 °, ±27 ° @ 25 °C
Duty Cycle:		50%, +10%
Requirements:		Encoders must be line driver type, quadrature (dual channel) or pulse (single channel), 3.5...26V DC output, single-ended or differential and capable of supplying a minimum of 10 mA per channel. Allowable input is DC up to a maximum frequency of 250 kHz. The encoder I/O automatically scales to allow 5V, 12V and 24V DC nominal voltages.

Power Specifications

Watts Loss

PowerFlex 520-Series Estimated Watts Loss (Rated Load, Speed & PWM)

Voltage	Output Current (A)	Total Watts Loss
100...120V, 50/60 Hz 1-Phase	1.6	20.0
	2.5	27.0
	4.8	53.0
	6.0	67.0
200...240V, 50/60 Hz 1-Phase	1.6	20.0
	2.5	29.0
	4.8	50.0
	8.0	81.0
	11.0	111.0
200...240V, 50/60 Hz 1-Phase w/ EMC Filter	1.6	20.0
	2.5	29.0
	4.8	53.0
	8.0	84.0
	11.0	116.0
200...240V, 50/60 Hz 3-Phase	1.6	20.0
	2.5	29.0
	5.0	50.0
	8.0	79.0
	11.0	107.0
	17.5	148.0
	24.0	259.0
	32.2	323.0
	48.3	584.0
	62.1	708.0
380...480V, 50/60 Hz 3-Phase	1.4	27.0
	2.3	37.0
	4.0	62.0
	6.0	86.0
	10.5	129.0
	13.0	170.0
	17.0	221.0
	24.0	303.0
	30.0	387.0
380...480V, 50/60 Hz 3-Phase w/ EMC Filter	1.4	27.0
	2.3	37.0
	4.0	63.0
	6.0	88.0
	10.5	133.0
	13.0	175.0
	17.0	230.0
	24.0	313.0
	30.0	402.0
	37.0	602.0
	43.0	697.0

PowerFlex 520-Series Estimated Watts Loss (Rated Load, Speed & PWM)

Voltage	Output Current (A)	Total Watts Loss
525...600V, 50/60 Hz 3-Phase	0.9	22.0
	1.7	32.0
	3.0	50.0
	4.2	65.0
	6.6	95.0
	9.9	138.0
	12.0	164.0
	19.0	290.0
	22.0	336.0
	27.0	466.0
	32.0	562.0

Input Current Scaling (Optional)

You can use a higher drive rating by scaling the input current based on the output current required for your application. You can use a lower input current rating based upon the motor FLA rating. For example, if the motor has an FLA rating of 1.6, the input rating will be 3.2 amps. See the PowerFlex 520-Series Input Current Rating Scaled by the Motor FLA on page 173 table for more information.

PowerFlex 520-Series Input Current Rating Scaled by the Motor FLA

PowerFlex 523	PowerFlex 525	Output Current: Motor FLA				Input Drive Current Rating			
Catalog Number	Catalog Number	1	2	3	4	5	6	7	8
100...120V AC (-15%, +10%) – 1-Phase Input, 0...230V 3-Phase Output									
25A-V1P6N104	–	1.6	1.3	1.0	0.8	6.4	5.2	4.0	3.2
25A-V2P5N104	25B-V2P5N104	2.5	2.0	1.6	1.3	9.6	7.7	6.2	4.8
25A-V4P8N104	25B-V4P8N104	4.8	3.8	3.1	2.4	19.2	15.4	12.5	9.6
25A-V6P0N104	25B-V6P0N104	6.0	4.8	3.9	3.0	24.0	19.2	15.6	12.0
200...240V AC (-15%, +10%) – 1-Phase Input, 0...230V 3-Phase Output									
25A-A1P6N104	–	1.6	1.3	1.0	0.8	5.3	4.3	3.4	2.7
25A-A2P5N104	25B-A2P5N104	2.5	2.0	1.6	1.3	6.5	5.2	4.2	3.3
25A-A4P8N104	25B-A4P8N104	4.8	3.8	3.1	2.4	10.7	8.6	7.0	5.4
25A-A8P0N104	25B-A8P0N104	8.0	6.4	5.2	4.0	18.0	14.4	11.7	9.0
25A-A011N104	25B-A011N104	11.0	8.8	7.2	5.5	22.9	18.3	14.9	11.5
200...240V AC (-15%, +10%) – 1-Phase Input with EMC Filter, 0...230V 3-Phase Output									
25A-A1P6N114	–	1.6	1.3	1.0	0.8	5.3	4.3	3.4	2.7
25A-A2P5N114	25B-A2P5N114	2.5	2.0	1.6	1.3	6.5	5.2	4.2	3.3
25A-A4P8N114	25B-A4P8N114	4.8	3.8	3.1	2.4	10.7	8.6	7.0	5.4
25A-A8P0N114	25B-A8P0N114	8.0	6.4	5.2	4.0	18.0	14.4	11.7	9.0
25A-A011N114	25B-A011N114	11.0	8.8	7.2	5.5	22.9	18.3	14.9	11.5
200...240V AC (-15%, +10%) – 3-Phase Input, 0...230V 3-Phase Output									
25A-B1P6N104	–	1.6	1.3	1.0	0.8	1.9	1.5	1.2	1.0
25A-B2P5N104	25B-B2P5N104	2.5	2.0	1.6	1.3	2.7	2.2	1.8	1.4
25A-B5P0N104	25B-B5P0N104	5.0	4.0	3.2	2.5	5.8	4.6	3.8	2.9
25A-B8P0N104	25B-B8P0N104	8.0	6.4	5.2	4.0	9.5	7.6	6.2	4.8
25A-B011N104	25B-B011N104	11.0	8.8	7.2	5.5	13.8	11.0	9.0	6.9
25A-B017N104	25B-B017N104	17.5	14.0	11.4	8.8	21.1	16.9	13.7	10.6

PowerFlex 520-Series Input Current Rating Scaled by the Motor FLA

PowerFlex 523	PowerFlex 525	Output Current: Motor FLA				Input Drive Current Rating			
Catalog Number	**Catalog Number**	**1**	**2**	**3**	**4**	**5**	**6**	**7**	**8**
25A-B024N104	25B-B024N104	24.0	19.2	15.6	12.0	26.6	21.3	17.3	13.3
25A-B032N104	25B-B032N104	32.2	25.8	20.9	16.1	34.8	27.8	22.6	17.4
25A-B048N104	25B-B048N104	48.3	38.6	31.4	24.2	44.0	35.2	28.6	22.0
25A-B062N104	25B-B062N104	62.1	49.7	40.4	31.1	56.0	44.8	36.4	28.0
380...480V AC (-15%, +10%) – 3-Phase Input, 0...460V 3-Phase Output									
25A-D1P4N104	25B-D1P4N104	1.4	1.1	0.9	0.7	1.9	1.5	1.2	1.0
25A-D2P3N104	25B-D2P3N104	2.3	1.8	1.5	1.2	3.2	2.6	2.1	1.6
25A-D4P0N104	25B-D4P0N104	4.0	3.2	2.6	2.0	5.7	4.6	3.7	2.9
25A-D6P0N104	25B-D6P0N104	6.0	4.8	3.9	3.0	7.5	6.0	4.9	3.8
25A-D010N104	25B-D010N104	10.5	8.4	6.8	5.3	13.8	11.0	9.0	6.9
25A-D013N104	25B-D013N104	13.0	10.4	8.5	6.5	15.4	12.3	10.0	7.7
25A-D017N104	25B-D017N104	17.0	13.6	11.1	8.5	18.4	14.7	12.0	9.2
25A-D024N104	25B-D024N104	24.0	19.2	15.6	12.0	26.4	21.1	17.2	13.2
25A-D030N104	25B-D030N104	30.0	24.0	19.5	15.0	33.0	26.4	21.5	16.5
380...480V AC (-15%, +10%) – 3-Phase Input with EMC Filter, 0...460V 3-Phase Output									
25A-D1P4N114	25B-D1P4N114	1.4	1.1	0.9	0.7	1.9	1.5	1.2	1.0
25A-D2P3N114	25B-D2P3N114	2.3	1.8	1.5	1.2	3.2	2.6	2.1	1.6
25A-D4P0N114	25B-D4P0N114	4.0	3.2	2.6	2.0	5.7	4.6	3.7	2.9
25A-D6P0N114	25B-D6P0N114	6.0	4.8	3.9	3.0	7.5	6.0	4.9	3.8
25A-D010N114	25B-D010N114	10.5	8.4	6.8	5.3	13.8	11.0	9.0	6.9
25A-D013N114	25B-D013N114	13.0	10.4	8.5	6.5	15.4	12.3	10.0	7.7
25A-D017N114	25B-D017N114	17.0	13.6	11.1	8.5	18.4	14.7	12.0	9.2
25A-D024N114	25B-D024N114	24.0	19.2	15.6	12.0	26.4	21.1	17.2	3.2
25A-D030N114	25B-D030N114	30.0	24.0	19.5	15.0	33.0	26.4	21.5	16.5
25A-D037N114	25B-D037N114	37.0	29.6	24.1	18.5	33.7	27.0	21.9	16.9
25A-D043N114	25B-D043N114	43.0	34.4	28.0	21.5	38.9	31.1	25.3	19.5
525...600V AC (-15%, +10%) – 3-Phase Input, 0...575V 3-Phase Output									
25A-E0P9N104	25B-E0P9N104	0.9	0.7	0.6	0.5	1.2	1.0	0.8	0.6
25A-E1P7N104	25B-E1P7N104	1.7	1.4	1.1	0.9	2.3	1.8	1.5	1.2
25A-E3P0N104	25B-E3P0N104	3.0	2.4	2.0	1.5	3.8	3.0	2.5	1.9
25A-E4P2N104	25B-E4P2N104	4.2	3.4	2.7	2.1	5.3	4.2	3.4	2.7
25A-E6P6N104	25B-E6P6N104	6.6	5.3	4.3	3.3	8.0	6.4	5.2	4.0
25A-E9P9N104	25B-E9P9N104	9.9	7.9	6.4	5.0	11.2	9.0	7.3	5.6
25A-E012N104	25B-E012N104	12.0	9.6	7.8	6.0	13.5	10.8	8.8	6.8
25A-E019N104	25B-E019N104	19.0	15.2	12.4	9.5	24.0	19.2	15.6	12.0
25A-E022N104	25B-E022N104	22.0	17.6	14.3	11.0	27.3	21.8	17.7	13.7
25A-E027N104	25B-E027N104	27.0	21.6	17.6	13.5	24.7	19.8	16.1	12.4
25A-E032N104	25B-E032N104	32.0	25.6	20.8	16.0	29.2	23.4	19.0	14.6

Accessories and Dimensions

Product Selection

Catalog Number Description

25B	-	V	2P5	N	1	0	4
Drive		Voltage Rating	Rating	Enclosure	HIM	Emission Class	Version

PowerFlex 520-Series Drive Ratings

Output Ratings					Input Voltage Range	Frame Size	PowerFlex 523	PowerFlex 525
Normal Duty		Heavy Duty		Output Current (A)				
HP	kW	HP	kW				Catalog No.	Catalog No.
100...120V AC (-15%, +10%) – 1-Phase Input, 0...230V 3-Phase Output								
0.25	0.2	0.25	0.2	1.6	85...132	A	25A-V1P6N104[2]	–
0.5	0.4	0.5	0.4	2.5	85...132	A	25A-V2P5N104	25B-V2P5N104
1.0	0.75	1.0	0.75	4.8	85...132	B	25A-V4P8N104	25B-V4P8N104
1.5	1.1	1.5	1.1	6.0	85...132	B	25A-V6P0N104	25B-V6P0N104
200...240V AC (-15%, +10%) – 1-Phase Input, 0...230V 3-Phase Output								
0.25	0.2	0.25	0.2	1.6	170...264	A	25A-A1P6N104[2]	–
0.5	0.4	0.5	0.4	2.5	170...264	A	25A-A2P5N104	25B-A2P5N104
1.0	0.75	1.0	0.75	4.8	170...264	A	25A-A4P8N104	25B-A4P8N104
2.0	1.5	2.0	1.5	8.0	170...264	B	25A-A8P0N104	25B-A8P0N104
3.0	2.2	3.0	2.2	11.0	170...264	B	25A-A011N104	25B-A011N104
200...240V AC (-15%, +10%) – 1-Phase Input with EMC Filter, 0...230V 3-Phase Output								
0.25	0.2	0.25	0.2	1.6	170...264	A	25A-A1P6N114	–
0.5	0.4	0.5	0.4	2.5	170...264	A	25A-A2P5N114	25B-A2P5N114
1.0	0.75	1.0	0.75	4.8	170...264	A	25A-A4P8N114	25B-A4P8N114
2.0	1.5	2.0	1.5	8.0	170...264	B	25A-A8P0N114	25B-A8P0N114
3.0	2.2	3.0	2.2	11.0	170...264	B	25A-A011N114	25B-A011N114
200...240V AC (-15%, +10%) – 3-Phase Input, 0...230V 3-Phase Output								
0.25	0.2	0.25	0.2	1.6	170...264	A	25A-B1P6N104[2]	–
0.5	0.4	0.5	0.4	2.5	170...264	A	25A-B2P5N104	25B-B2P5N104
1.0	0.75	1.0	0.75	5.0	170...264	A	25A-B5P0N104	25B-B5P0N104
2.0	1.5	2.0	1.5	8.0	170...264	A	25A-B8P0N104	25B-B8P0N104
3.0	2.2	3.0	2.2	11.0	170...264	A	25A-B011N104	25B-B011N104
5.0	4.0	5.0	4.0	17.5	170...264	B	25A-B017N104	25B-B017N104
7.5	5.5	7.5	5.5	24.0	170...264	C	25A-B024N104	25B-B024N104
10.0	7.5	10.0	7.5	32.2	170...264	D	25A-B032N104	25B-B032N104
15.0	11.0	10.0	7.5	48.3	170...264	E	25A-B048N104	25B-B048N104
20.0	15.0	15.0	11.0	62.1	170...264	E	25A-B062N104	25B-B062N104
380...480V AC (-15%, +10%) – 3-Phase Input, 0...460V 3-Phase Output[1]								
0.5	0.4	0.5	0.4	1.4	323...528	A	25A-D1P4N104[2]	25B-D1P4N104[2]
1.0	0.75	1.0	0.75	2.3	323...528	A	25A-D2P3N104	25B-D2P3N104
2.0	1.5	2.0	1.5	4.0	323...528	A	25A-D4P0N104	25B-D4P0N104
3.0	2.2	3.0	2.2	6.0	323...528	A	25A-D6P0N104	25B-D6P0N104
5.0	4.0	5.0	4.0	10.5	323...528	B	25A-D010N104	25B-D010N104

PowerFlex 520-Series Drive Ratings

Output Ratings					Input Voltage Range	Frame Size	PowerFlex 523	PowerFlex 525
Normal Duty		Heavy Duty		Output Current (A)				
HP	kW	HP	kW				Catalog No.	Catalog No.
7.5	5.5	7.5	5.5	13.0	323...528	C	25A-D013N104	25B-D013N104
10.0	7.5	10.0	7.5	17.0	323...528	C	25A-D017N104	25B-D017N104
15.0	11.0	15.0	11.0	24.0	323...528	D	25A-D024N104	25B-D024N104
20.0	15.0	15.0	11.0	30.0	323...528	D	25A-D030N104	25B-D030N104
380...480V AC (-15%, +10%) – 3-Phase Input with EMC Filter, 0...460V 3-Phase Output								
0.5	0.4	0.5	0.4	1.4	323...528	A	25A-D1P4N114	25B-D1P4N114
1.0	0.75	1.0	0.75	2.3	323...528	A	25A-D2P3N114	25B-D2P3N114
2.0	1.5	2.0	1.5	4.0	323...528	A	25A-D4P0N114	25B-D4P0N114
3.0	2.2	3.0	2.2	6.0	323...528	A	25A-D6P0N114	25B-D6P0N114
5.0	4.0	5.0	4.0	10.5	323...528	B	25A-D010N114	25B-D010N114
7.5	5.5	7.5	5.5	13.0	323...528	C	25A-D013N114	25B-D013N114
10.0	7.5	10.0	7.5	17.0	323...528	C	25A-D017N114	25B-D017N114
15.0	11.0	15.0	11.0	24.0	323...528	D	25A-D024N114	25B-D024N114
20.0	15.0	15.0	11.0	30.0	323...528	D	25A-D030N114	25B-D030N114
25.0	18.5	20.0	15.0	37.0	323...528	E	25A-D037N114	25B-D037N114
30.0	22.0	25.0	18.5	43.0	323...528	E	25A-D043N114	25B-D043N114
525...600V AC (-15%, +10%) – 3-Phase Input, 0...575V 3-Phase Output								
0.5	0.4	0.5	0.4	0.9	446...660	A	25A-E0P9N104(2)	25B-E0P9N104(2)
1.0	0.75	1.0	0.75	1.7	446...660	A	25A-E1P7N104	25B-E1P7N104
2.0	1.5	2.0	1.5	3.0	446...660	A	25A-E3P0N104	25B-E3P0N104
3.0	2.2	3.0	2.2	4.2	446...660	A	25A-E4P2N104	25B-E4P2N104
5.0	4.0	5.0	4.0	6.6	446...660	B	25A-E6P6N104	25B-E6P6N104
7.5	5.5	7.5	5.5	9.9	446...660	C	25A-E9P9N104	25B-E9P9N104
10.0	7.5	10.0	7.5	12.0	446...660	C	25A-E012N104	25B-E012N104
15.0	11.0	15.0	11.0	19.0	446...660	D	25A-E019N104	25B-E019N104
20.0	15.0	15.0	11.0	22.0	446...660	D	25A-E022N104	25B-E022N104
25.0	18.5	20.0	15.0	27.0	446...660	E	25A-E027N104	25B-E027N104
30.0	22.0	25.0	18.5	32.0	446...660	E	25A-E032N104	25B-E032N104

(1) A non-filtered drive is not available for 380...480V AC 25 HP (18.5 kW) and 30 HP (22.0 kW) ratings. Filtered drives are available, however you must verify that the application will support a filtered drive.

(2) These drive ratings do not come with a heatsink cooling fan and are in accordance with design specifications.

Dynamic Brake Resistors

Drive Ratings			Minimum Resistance Ω ±10%	Resistance Ω ±5%	Catalog No.(1)(2)
Input Voltage	HP	kW			
100...120V 50/60 Hz 1-Phase	0.25	0.2	56	91	AK-R2-091P500
	0.5	0.4	56	91	AK-R2-091P500
	1.0	0.75	56	91	AK-R2-091P500
	1.5	1.1	41	91	AK-R2-091P500
200...240V 50/60 Hz 1-Phase	0.25	0.2	56	91	AK-R2-091P500
	0.5	0.4	56	91	AK-R2-091P500
	1.0	0.75	56	91	AK-R2-091P500
	2.0	1.5	41	91	AK-R2-091P500
	3.0	2.2	32	47	AK-R2-047P500

Dynamic Brake Resistors

Drive Ratings			Minimum Resistance Ω ±10%	Resistance Ω ±5%	Catalog No.(1)(2)
Input Voltage	**HP**	**kW**			
200...240V 50/60 Hz 3-Phase	0.25	0.2	56	91	AK-R2-091P500
	0.5	0.4	56	91	AK-R2-091P500
	1.0	0.75	56	91	AK-R2-091P500
	2.0	1.5	41	91	AK-R2-091P500
	3.0	2.2	32	47	AK-R2-047P500
	5.0	4.0	18	47	AK-R2-047P500
	7.5	5.5	16	30	AK-R2-030P1K2
	10.0	7.5	14	30	AK-R2-030P1K2
	15.0	11.0	14	15	AK-R2-030P1K2(3)
	20.0	15.0	10	15	AK-R2-030P1K2(3)
380...480V 50/60 Hz 3-Phase	0.5	0.4	89	360	AK-R2-360P500
	1.0	0.75	89	360	AK-R2-360P500
	2.0	1.5	89	360	AK-R2-360P500
	3.0	2.2	89	120	AK-R2-120P1K2
	5.0	4.0	47	120	AK-R2-120P1K2
	7.5	5.5	47	120	AK-R2-120P1K2
	10.0	7.5	47	120	AK-R2-120P1K2
	15.0	11.0	43	60	AK-R2-120P1K2(3)
	20.0	15.0	43	60	AK-R2-120P1K2(3)
	25.0	18.5	27	40	AK-R2-120P1K2(4)
	30.0	22.0	27	40	AK-R2-120P1K2(4)
525...600V 50/60 Hz 3-Phase	0.5	0.4	112	360	AK-R2-360P500
	1.0	0.75	112	360	AK-R2-360P500
	2.0	1.5	112	360	AK-R2-360P500
	3.0	2.2	112	120	AK-R2-120P1K2
	5.0	4.0	86	120	AK-R2-120P1K2
	7.5	5.5	59	120	AK-R2-120P1K2
	10.0	7.5	59	120	AK-R2-120P1K2
	15.0	11.0	59	60	AK-R2-120P1K2(3)
	20.0	15.0	59	60	AK-R2-120P1K2(3)
	25.0	18.5	53	60	AK-R2-120P1K2(3)
	30.0	22.0	34	40	AK-R2-120P1K2(4)

(1) The resistors listed in this tables are rated for 5% duty cycle.

(2) Use of Rockwell Automation resistors is always recommended. The resistors listed have been carefully selected for optimizing performance in a variety of applications. Alternative resistors may be used, however, care must be taken when making a selection. See the PowerFlex Dynamic Braking Resistor Calculator, publication PFLEX-AT001.

(3) Requires two resistors wired in parallel.

(4) Requires three resistors wired in parallel.

EMC Line Filters

Short Circuit Current Rating = 100 kA					
Drive Ratings					
Input Voltage	**HP**	**kW**	**Current (A)**	**Frame Size**	**Catalog No.**
100...120V 50/60 Hz 1-Phase	0.25	0.2	1.6	A	25-RF011-AL
	0.5	0.4	2.5	A	25-RF011-AL
	1.0	0.75	4.8	B	25-RF023-BL
	1.5	1.1	6.0	B	25-RF023-BL

EMC Line Filters

Short Circuit Current Rating = 100 kA					
Drive Ratings					
Input Voltage	**HP**	**kW**	**Current (A)**	**Frame Size**	**Catalog No.**
200...240V 50/60 Hz 1-Phase	0.25	0.2	1.6	A	25-RF011-AL
	0.5	0.4	2.5	A	25-RF011-AL
	1.0	0.75	4.8	A	25-RF011-AL
	2.0	1.5	8.0	B	25-RF023-BL
	3.0	2.2	11.0	B	25-RF023-BL
200...240V 50/60 Hz 3-Phase	0.25	0.2	1.6	A	25-RF014-AL
	0.5	0.4	2.5	A	25-RF014-AL
	1.0	0.75	5.0	A	25-RF014-AL
	2.0	1.5	8.0	A	25-RF014-AL
	3.0	2.2	11.0	A	25-RF014-AL
	5.0	4.0	17.5	B	25-RF021-BL
	7.5	5.5	24.0	C	25-RF027-CL
	10.0	7.5	32.2	D	25-RF035-DL
	15.0	11.0	48.3	E	25-RF056-EL
	20.0	15.0	62.1	E	25-RF056-EL
380...480V 50/60 Hz 3-Phase	0.5	0.4	1.4	A	25-RF7P5-AL
	1.0	0.75	2.3	A	25-RF7P5-AL
	2.0	1.5	4.0	A	25-RF7P5-AL
	3.0	2.2	6.0	A	25-RF7P5-AL
	5.0	4.0	10.5	B	25-RF014-BL
	7.5	5.5	13.0	C	25-RF018-CL
	10.0	7.5	17.0	C	25-RF018-CL
	15.0	11.0	24.0	D	25-RF033-DL
	20.0	15.0	30.0	D	25-RF033-DL
	25.0	18.5	37.0	E	25-RF039-EL
	30.0	22.0	43.0	E	25-RF039-EL(1)
525...600V 50/60 Hz 3-Phase	0.5	0.4	0.9	A	25-RF8P0-BL(2)
	1.0	0.75	1.7	A	25-RF8P0-BL(2)
	2.0	1.5	3.0	A	25-RF8P0-BL(2)
	3.0	2.2	4.2	A	25-RF8P0-BL(2)
	5.0	4.0	6.6	B	25-RF8P0-BL
	7.5	5.5	9.9	C	25-RF014-CL
	10.0	7.5	12.0	C	25-RF014-CL
	15.0	11.0	19.0	D	25-RF027-DL
	20.0	15.0	22.0	D	25-RF027-DL
	25.0	18.5	27.0	E	25-RF029-EL
	30.0	22.0	32.0	E	25-RF029-EL(1)

(1) EMC Line Filter size is based on the input current of the drive. See the tables on page 26 and page 27 for more information.

(2) This 600V drive rating needs to be matched with a frame B EMC Line Filter.

EMC Plates

Item	Description	Frame Size	Catalog No.
EMC Plate	Optional grounding plate for shielded cables.	A	25-EMC1-FA
		B	25-EMC1-FB
		C	25-EMC1-FC
		D	25-EMC1-FD
		E	25-EMC1-FE

Human Interface Module (HIM) Option Kits and Accessories

Item	Description	Catalog No.
LCD Display, Remote Panel Mount	Digital speed control CopyCat capable IP66 (NEMA Type 4X/12) indoor use only Includes 2.0 meter cable	22-HIM-C2S
LCD Display, Remote Handheld	Digital speed control Full numeric keyboard CopyCat capable IP 30 (NEMA Type 1) Includes 1.0 meter cable Panel mount with optional Bezel Kit	22-HIM-A3
Bezel Kit	Panel mount for LCD Display, Remote Handheld unit, IP 30 (NEMA Type 1) Includes 2.0 m DSI cable	22-HIM-B1
DSI HIM Cable (DSI HIM to RJ45 cable)	1.0 m (3.3 ft)	22-HIM-H10
	2.9 m (9.51 ft)	22-HIM-H30

IP 30/NEMA 1/UL Type 1 Kit

Item	Description	Frame Size	Catalog No.
IP 30/NEMA 1/UL Type 1 Kit	Field installed kit. Converts drive to IP 30/NEMA 1/UL Type 1 enclosure. Includes conduit box with mounting screws and plastic top panel.	A	25-JBAA
		B	25-JBAB
		C	25-JBAC
		D	25-JBAD
		E	25-JBAE

Control Module Fan Kit

Item	Description	Frame Size	Catalog No.
Control Module Fan Kit	For use with drive in environments with ambient temperatures up to 70 °C or horizontal mounting.	A...D	25-FAN1-70C
		E	25-FAN2-70C

Incremental Encoder Input Option

Item	Description	Catalog No.
Incremental Encoder	Incremental encoder input option board.	25-ENC-1

WARNING: Only the 25-ENC-1 Encoder will work properly in the PowerFlex 525 drive. Installing an incorrect encoder card, such as the PowerFlex 527 25-ENC-2 will cause damage to the PowerFlex 525 drive.

Bulletin 160 to PowerFlex 520-Series Mounting Adapter Plate

Item	Description	B160 Frame Size	Catalog No.
Mounting Adapter Plate	For use with drive when replacing Bulletin 160 drives in existing installations to a PowerFlex 520-Series drive. Select the catalog number based on the frame size of your Bulletin 160 drive.	A	25-MAP-FA
		B	25-MAP-FB

Replacement Parts

PowerFlex 520-Series Power Module

Item	Description
PowerFlex 520-Series Power Module	Replacement power module for use with PowerFlex 520-Series drives. Includes: • Power Module • Power Module Front Cover • Power Terminal Guard • Heatsink Fan

Output Ratings					Input Voltage Range	Frame Size	Catalog No.
Normal Duty		Heavy Duty		Output Current (A)			
HP	kW	HP	kW				
100...120V AC (-15%, +10%) – 1-Phase Input, 0...230V 3-Phase Output							
0.25	0.2	0.25	0.2	1.6	85...132	A	25-PM1-V1P6
0.5	0.4	0.5	0.4	2.5	85...132	A	25-PM1-V2P5
1.0	0.75	1.0	0.75	4.8	85...132	B	25-PM1-V4P8
1.5	1.1	1.5	1.1	6.0	85...132	B	25-PM1-V6P0
200...240V AC (-15%, +10%) – 1-Phase Input, 0...230V 3-Phase Output							
0.25	0.2	0.25	0.2	1.6	170...264	A	25-PM1-A1P6
0.5	0.4	0.5	0.4	2.5	170...264	A	25-PM1-A2P5
1.0	0.75	1.0	0.75	4.8	170...264	A	25-PM1-A4P8
2.0	1.5	2.0	1.5	8.0	170...264	B	25-PM1-A8P0
3.0	2.2	3.0	2.2	11.0	170...264	B	25-PM1-A011
200...240V AC (-15%, +10%) – 1-Phase Input with EMC Filter, 0...230V 3-Phase Output							
0.25	0.2	0.25	0.2	1.6	170...264	A	25-PM2-A1P6
0.5	0.4	0.5	0.4	2.5	170...264	A	25-PM2-A2P5
1.0	0.75	1.0	0.75	4.8	170...264	A	25-PM2-A4P8
2.0	1.5	2.0	1.5	8.0	170...264	B	25-PM2-A8P0
3.0	2.2	3.0	2.2	11.0	170...264	B	25-PM2-A011
200...240V AC (-15%, +10%) – 3-Phase Input, 0...230V 3-Phase Output							
0.25	0.2	0.25	0.2	1.6	170...264	A	25-PM1-B1P6
0.5	0.4	0.5	0.4	2.5	170...264	A	25-PM1-B2P5
1.0	0.75	1.0	0.75	5.0	170...264	A	25-PM1-B5P0
2.0	1.5	2.0	1.5	8.0	170...264	A	25-PM1-B8P0
3.0	2.2	3.0	2.2	11.0	170...264	A	25-PM1-B011
5.0	4.0	5.0	4.0	17.5	170...264	B	25-PM1-B017
7.5	5.5	7.5	5.5	24.0	170...264	C	25-PM1-B024
10.0	7.5	10.0	7.5	32.2	170...264	D	25-PM1-B032
15.0	11.0	10.0	7.5	48.3	170...264	E	25-PM1-B048
20.0	15.0	15.0	11.0	62.1	170...264	E	25-PM1-B062
380...480V AC (-15%, +10%) – 3-Phase Input, 0...460V 3-Phase Output							
0.5	0.4	0.5	0.4	1.4	323...528	A	25-PM1-D1P4

Output Ratings							
Normal Duty		Heavy Duty		Output Current (A)	Input Voltage Range	Frame Size	Catalog No.
HP	kW	HP	kW				
1.0	0.75	1.0	0.75	2.3	323...528	A	25-PM1-D2P3
2.0	1.5	2.0	1.5	4.0	323...528	A	25-PM1-D4P0
3.0	2.2	3.0	2.2	6.0	323...528	A	25-PM1-D6P0
5.0	4.0	5.0	4.0	10.5	323...528	B	25-PM1-D010
7.5	5.5	7.5	5.5	13.0	323...528	C	25-PM1-D013
10.0	7.5	10.0	7.5	17.0	323...528	C	25-PM1-D017
15.0	11.0	15.0	11.0	24.0	323...528	D	25-PM1-D024
20.0	15.0	15.0	11.0	30.0	323...528	D	25-PM1-D030
380...480V AC (-15%, +10%) – 3-Phase Input with EMC Filter, 0...460V 3-Phase Output							
0.5	0.4	0.5	0.4	1.4	323...528	A	25-PM2-D1P4
1.0	0.75	1.0	0.75	2.3	323...528	A	25-PM2-D2P3
2.0	1.5	2.0	1.5	4.0	323...528	A	25-PM2-D4P0
3.0	2.2	3.0	2.2	6.0	323...528	A	25-PM2-D6P0
5.0	4.0	5.0	4.0	10.5	323...528	B	25-PM2-D010
7.5	5.5	7.5	5.5	13.0	323...528	C	25-PM2-D013
10.0	7.5	10.0	7.5	17.0	323...528	C	25-PM2-D017
15.0	11.0	15.0	11.0	24.0	323...528	D	25-PM2-D024
20.0	15.0	15.0	11.0	30.0	323...528	D	25-PM2-D030
25.0	18.5	20.0	15.0	37.0	323...528	E	25-PM2-D037
30.0	22.0	25.0	18.5	43.0	323...528	E	25-PM2-D043
525...600V AC (-15%, +10%) – 3-Phase Input, 0...575V 3-Phase Output							
0.5	0.4	0.5	0.4	0.9	446...660	A	25-PM1-E0P9
1.0	0.75	1.0	0.75	1.7	446...660	A	25-PM1-E1P7
2.0	1.5	2.0	1.5	3.0	446...660	A	25-PM1-E3P0
3.0	2.2	3.0	2.2	4.2	446...660	A	25-PM1-E4P2
5.0	4.0	5.0	4.0	6.6	446...660	B	25-PM1-E6P6
7.5	5.5	7.5	5.5	9.9	446...660	C	25-PM1-E9P9
10.0	7.5	10.0	7.5	12.0	446...660	C	25-PM1-E012
15.0	11.0	15.0	11.0	19.0	446...660	D	25-PM1-E019
20.0	15.0	15.0	11.0	22.0	446...660	D	25-PM1-E022
25.0	18.5	20.0	15.0	27.0	446...660	E	25-PM1-E027
30.0	22.0	25.0	18.5	32.0	446...660	E	25-PM1-E032

PowerFlex 520-Series Control Module

Item	Description	Frame Size	Catalog No.
PowerFlex 523 Control Module	Replacement control module for use with PowerFlex 520-Series drives. Includes: • Control Module • Control Module Front Cover	A...E	25A-CTM1
PowerFlex 525 Control Module			25B-CTM1

Other Parts

Item	Description	Frame Size	Catalog No.
PowerFlex 523 Control Module Front Cover	Replacement cover for the control module I/O terminals, EtherNet/IP and DSI ports.	A...E	25A-CTMFC1
PowerFlex 525 Control Module Front Cover			25B-CTMFC1

Other Parts

Item	Description	Frame Size	Catalog No.
PowerFlex 520-Series Power Module Front Cover	Replacement cover for the PowerFlex 520-Series power module.	B	25-PMFC-FB
		C	25-PMFC-FC
		D	25-PMFC-FD
		E	25-PMFC-FE
PowerFlex 520-Series Power Terminal Guard	Replacement finger guard for power terminals.	A	25-PTG1-FA
		B	25-PTG1-FB
		C	25-PTG1-FC
		D	25-PTG1-FD
		E	25-PTG1-FE
PowerFlex 520-Series Heatsink Fan Kit	Replacement fan for drive power module.	A	25-FAN1-FA
		B	25-FAN1-FB
		C	25-FAN1-FC
		D	25-FAN1-FD
		E	25-FAN1-FE
PowerFlex 520-Series EMC Cores	Replacement EMC cores	A	25-CORE-A
			25-CORE-RF-A
		B	25-CORE-B
			25-CORE-RF-B
		C	25-CORE-C
			25-CORE-RF-C
		D	25-CORE-D
			25-CORE-RF-D
		E	25-CORE-E
			25-CORE-RF-E

Communication Option Kits and Accessories

Item	Description	Catalog No.
Communication Adapters	Embedded communication options for use with the PowerFlex 520-Series drives: • DeviceNet™ • Dual Port EtherNet/IP™ • PROFIBUS™ DP-V1	 25-COMM-D 25-COMM-E2P 25-COMM-P
Compact I/O Module	Three channel	1769-SM2
Universal Serial Bus™ (USB) Converter Module	Provides serial communication with DF1 protocol for use with Connected Components Workbench software. Includes: • 2 m USB cable (1) • 20-HIM-H10 cable (1) • 22-HIM-H10 cable (1)	1203-USB
Serial Converter Module (RS485 to RS232)	Provides serial communication with DF1 protocol for use with Connected Components Workbench software. Includes: • DSI to RS232 serial converter (1) • 1203-SFC serial cable (1) • 22-RJ45CBL-C20 cable (1)	22-SCM-232
DSI Cable	2.0 m RJ45 to RJ45 cable, male to male connectors.	22-RJ45CBL-C20
Serial Cable	2.0 m serial cable with a locking low profile connector to connect to the serial converter and a 9-pin sub-miniature D female connector to connect to a computer.	1203-SFC
Splitter Cable	RJ45 one to two port splitter cable (Modbus only)	AK-U0-RJ45-SC1

Communication Option Kits and Accessories

Item	Description	Catalog No.
Terminating Resistors	RJ45 120 Ohm resistors (2 pieces)	AK-U0-RJ45-TR1
Terminal Block	RJ45 Two position terminal block (5 pieces)	AK-U0-RJ45-TB2P
Connected Components Workbench Software (Download or DVD-ROM)	Windows-based software packages for programming and configuring Allen-Bradley drives and other Rockwell Automation products. Compatibility: Windows XP, Windows Vista and Windows 7	http://ab.rockwellautomation.com/programmable-controllers/connected-components-workbench-software

Bulletin 1321-3R Series Line Reactors

Output Ratings[1]				Input Line Reactor[3][4]		Output Line Reactor[3][4]	
Normal Duty		Heavy Duty		IP00 (Open Style)	IP11 (NEMA/UL Type 1)	IP00 (Open Style)	IP11 (NEMA/UL Type 1)
HP	kW	HP	kW	Catalog No.	Catalog No.	Catalog No.	Catalog No.
200...240V 50/60 Hz 1-Phase[2]							
0.25	0.2	0.25	0.2	1321-3R4-A	1321-3RA4-A	1321-3R2-D	1321-3RA2-D
0.5	0.4	0.5	0.4	1321-3R8-A	1321-3RA8-A	1321-3R2-D	1321-3RA2-D
1.0	0.75	1.0	0.75	1321-3R8-A	1321-3RA8-A	1321-3R4-A	1321-3RA4-A
2.0	1.5	2.0	1.5	1321-3R18-A	1321-3RA18-A	1321-3R8-A	1321-3RA8-A
3.0	2.2	3.0	2.2	1321-3R18-A	1321-3RA18-A	1321-3R12-A	1321-3RA12-A
200...240V 50/60 Hz 3-Phase							
0.25	0.2	0.25	0.2	1321-3R2-D	1321-3RA2-D	1321-3R2-D	1321-3RA2-D
0.5	0.4	0.5	0.4	1321-3R2-D	1321-3RA2-D	1321-3R2-D	1321-3RA2-D
1.0	0.75	1.0	0.75	1321-3R4-A	1321-3RA4-A	1321-3R4-A	1321-3RA4-A
2.0	1.5	2.0	1.5	1321-3R8-A	1321-3RA8-A	1321-3R8-A	1321-3RA8-A
3.0	2.2	3.0	2.2	1321-3R12-A	1321-3RA12-A	1321-3R12-A	1321-3RA12-A
5.0	4.0	5.0	4.0	1321-3R18-A	1321-3RA18-A	1321-3R18-A	1321-3RA18-A
7.5	5.5	7.5	5.5	1321-3R25-A	1321-3RA25-A	1321-3R25-A	1321-3RA25-A
10.0	7.5	10.0	7.5	1321-3R35-A	1321-3RA35-A	1321-3R35-A	1321-3RA35-A
15.0	11.0	10.0	7.5	1321-3R45-A	1321-3RA45-A	1321-3R45-A	1321-3RA45-A
20.0	15.0	15.0	11.0	1321-3R55-A (ND) 1321-3R45-A (HD)	1321-3RA55-A (ND) 1321-3RA45-A (HD)	1321-3R55-A (ND) 1321-3R45-A (HD)	1321-3RA55-A (ND) 1321-3RA45-A (HD)
380...480V 50/60 Hz 3-Phase							
0.5	0.4	0.5	0.4	1321-3R2-B	1321-3RA2-B	1321-3R2-B	1321-3RA2-B
1.0	0.75	1.0	0.75	1321-3R4-C	1321-3RA4-C	1321-3R4-C	1321-3RA4-C
2.0	1.5	2.0	1.5	1321-3R4-B	1321-3RA4-B	1321-3R4-B	1321-3RA4-B
3.0	2.2	3.0	2.2	1321-3R8-C	1321-3RA8-C	1321-3R8-C	1321-3RA8-C
5.0	4.0	5.0	4.0	1321-3R12-B	1321-3RA12-B	1321-3R12-B	1321-3RA12-B
7.5	5.5	7.5	5.5	1321-3R12-B	1321-3RA12-B	1321-3R12-B	1321-3RA12-B
10.0	7.5	10.0	7.5	1321-3R18-B	1321-3RA18-B	1321-3R18-B	1321-3RA18-B
15.0	11.0	15.0	11.0	1321-3R25-B	1321-3RA25-B	1321-3R25-B	1321-3RA25-B
20.0	15.0	15.0	11.0	1321-3R35-B (ND) 1321-3R25-B (HD)	1321-3RA35-B (ND) 1321-3RA25-B (HD)	1321-3R35-B (ND) 1321-3R25-B (HD)	1321-3RA35-B (ND) 1321-3RA25-B (HD)
25.0	18.5	20.0	15.0	1321-3R35-B	1321-3RA35-B	1321-3R35-B	1321-3RA35-B
30.0	22.0	25.0	18.5	1321-3R45-B (ND) 1321-3R35-B (HD)	1321-3RA45-B (ND) 1321-3RA35-B (HD)	1321-3R45-B (ND) 1321-3R35-B (HD)	1321-3RA45-B (ND) 1321-3RA35-B (HD)
525...600V 50/60 Hz 3-Phase							
0.5	0.4	0.5	0.4	1321-3R1-C	1321-3RA1-C	1321-3R1-C	1321-3RA1-C
1.0	0.75	1.0	0.75	1321-3R2-B	1321-3RA2-B	1321-3R2-B	1321-3RA2-B
2.0	1.5	2.0	1.5	1321-3R4-C	1321-3RA4-C	1321-3R4-C	1321-3RA4-C

Bulletin 1321-3R Series Line Reactors

Output Ratings[1]				Input Line Reactor[3][4]		Output Line Reactor[3][4]	
Normal Duty		Heavy Duty		IP00 (Open Style)	IP11 (NEMA/UL Type 1)	IP00 (Open Style)	IP11 (NEMA/UL Type 1)
HP	kW	HP	kW	Catalog No.	Catalog No.	Catalog No.	Catalog No.
3.0	2.2	3.0	2.2	1321-3R4-B	1321-3RA4-B	1321-3R4-B	1321-3RA4-B
5.0	4.0	5.0	4.0	1321-3R8-C	1321-3RA8-C	1321-3R8-C	1321-3RA8-C
7.5	5.5	7.5	5.5	1321-3R12-B	1321-3RA12-B	1321-3R12-B	1321-3RA12-B
10.0	7.5	10.0	7.5	1321-3R12-B	1321-3RA12-B	1321-3R12-B	1321-3RA12-B
15.0	11.0	15.0	11.0	1321-3R18-B	1321-3RA18-B	1321-3R18-B	1321-3RA18-B
20.0	15.0	15.0	11.0	1321-3R25-B (ND) 1321-3R18-B (HD)	1321-3RA25-B (ND) 1321-3RA18-B (HD)	1321-3R25-B (ND) 1321-3R18-B (HD)	1321-3RA25-B (ND) 1321-3RA18-B (HD)
25.0	18.5	20.0	15.0	1321-3R35-C (ND) 1321-3R25-C (HD)	1321-3RA35-C (ND) 1321-3RA25-C (HD)	1321-3R35-C (ND) 1321-3R25-C (HD)	1321-3RA35-C (ND) 1321-3RA25-C (HD)
30.0	22.0	25.0	18.5	1321-3R35-C (ND) 1321-3R25-B (HD)	1321-3RA35-C (ND) 1321-3RA25-B (HD)	1321-3R35-C (ND) 1321-3R25-B (HD)	1321-3RA35-C (ND) 1321-3RA25-B (HD)

(1) Normal Duty and Heavy Duty ratings for 15 HP (11 kW) and below are identical except for 200...240V 3-Phase 15 HP (11 kW) drive.

(2) Standard 3-phase reactors can be used for 1-phase applications by routing each of the two supply conductors through an outside coil and leaving the center open.

(3) Catalog numbers listed are for 3% impedance at 60 Hz. 5% impedance reactor types are also available. See publication 1321-TD001.

(4) Input line reactors were sized based on the NEC fundamental motor amps. Output line reactors were sized based on the VFD rated output currents.

Product Dimensions

The PowerFlex 520-series drive is available in five frame sizes. See the PowerFlex 520-Series Drive Ratings on page 175 for information on power ratings.

PowerFlex 520-Series Drive Weight

Frame Size	Weight (kg/lb)
A	1.1 / 2.4
B	1.6 / 3.5
C	2.3 / 5.0
D	3.9 / 8.6
E	12.9 / 28.4

IP 20/Open Type – Frame A

Dimensions are in millimeters and (inches)

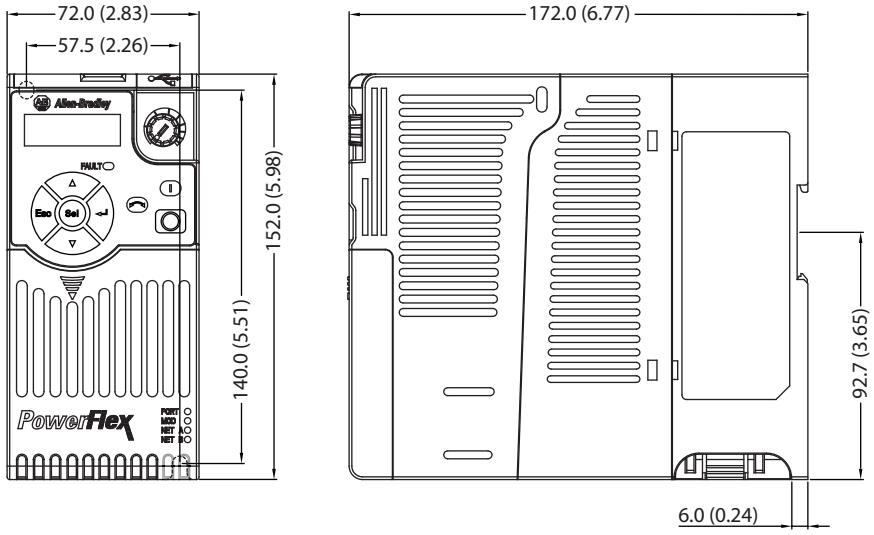

IP 20/Open Type – Frame B

Dimensions are in millimeters and (inches)

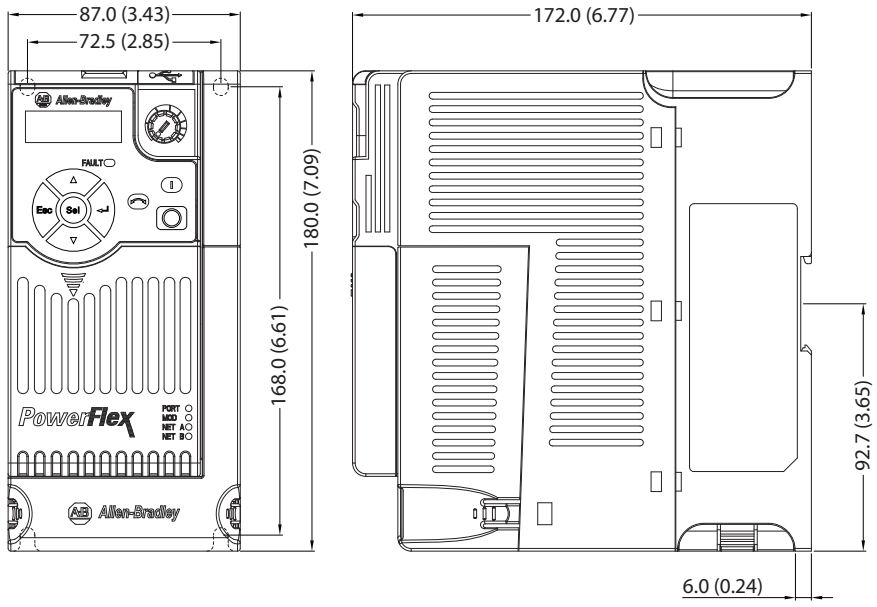

IP 20/Open Type – Frame C

Dimensions are in millimeters and (inches)

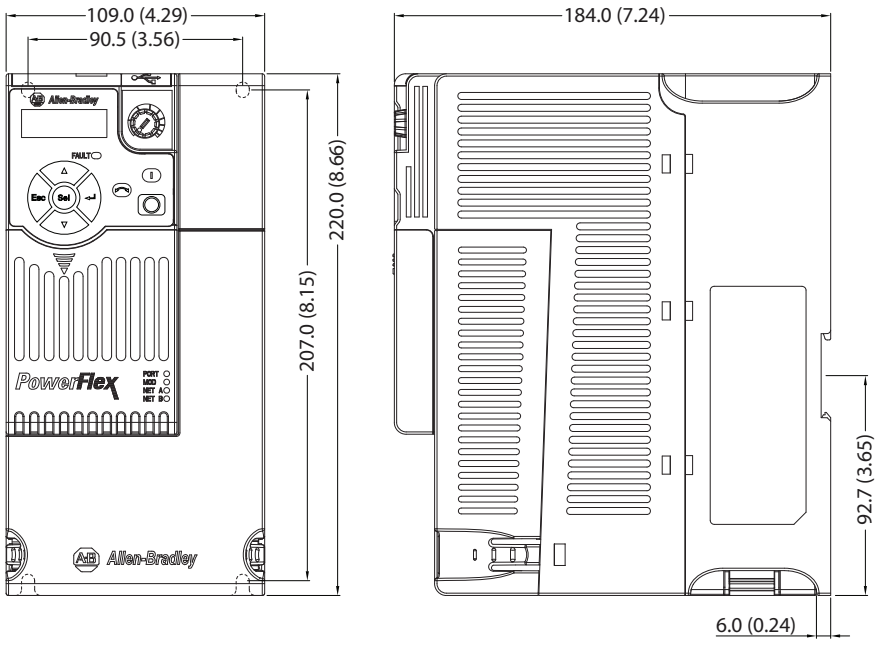

IP 20/Open Type – Frame D

Dimensions are in millimeters and (inches)

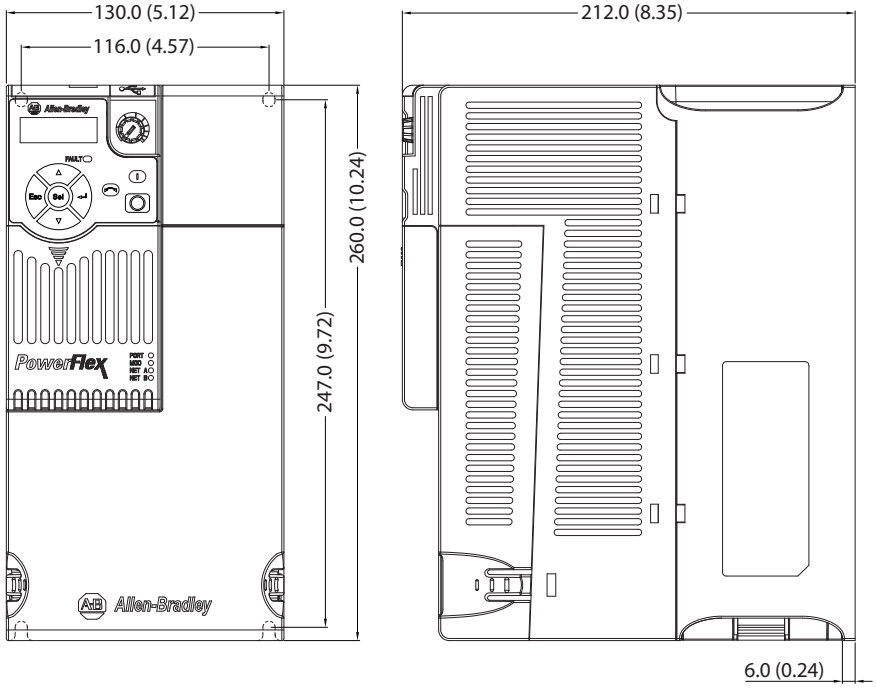

IP 20/Open Type – Frame E

Dimensions are in millimeters and (inches)

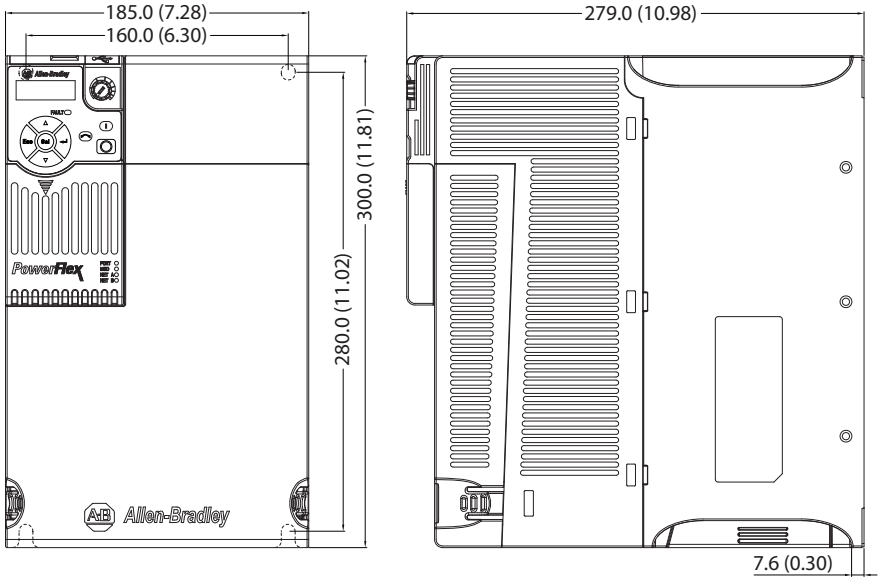

Control Module Fan Kit

25-FAN1-70C

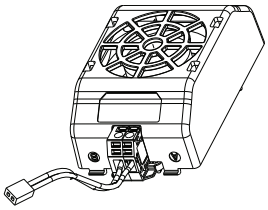

25-FAN2-70C

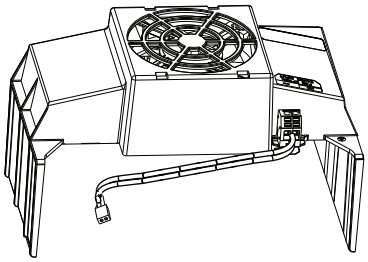

Specifications	25-FAN1-70C	25-FAN2-70C
Rated Voltage	24V DC	
Operation Voltage	14...27.6V DC	
Input Current	0.1 A	0.15 A
Speed (Reference)	7000 rpm	4500 ± 10% rpm
Maximum Air Flow (At zero static pressure)	0.575 m^3/min	1.574 m^3/min
Maximum Air Pressure (At zero air flow)	7.70 mmH_2O	9.598 mmH_2O
Acoustical Noise	40.5 dB-A	46.0 dB-A
Insulation Type	UL Class A	
Frame Size	Frame A...D	Frame E
Wire Size	0.32 mm^2 (22 AWG)	
Torque	0.29...0.39 Nm (2.6...3.47 lb-in.)	

IP 20/Open Type with Control Module Fan Kit – Frame A...C

Dimensions are in millimeters and (inches)

Frame A

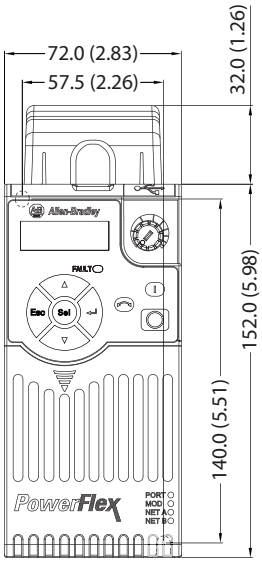

Frame B

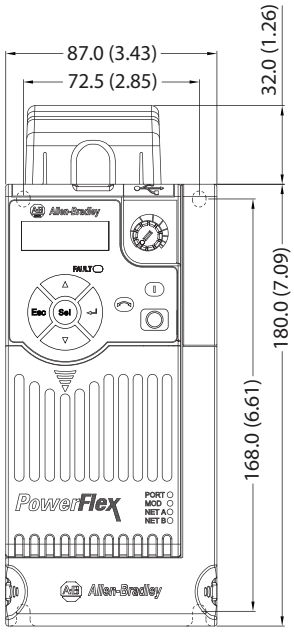

Frame C

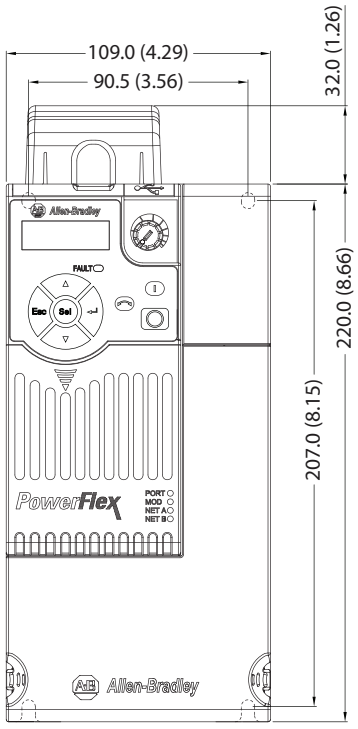

IMPORTANT An external 24V DC power source is required when using the Control Module Fan Kit with drive frames A, B, and C.

IP 20/Open Type with Control Module Fan Kit – Frame D...E

Dimensions are in millimeters and (inches)

Frame D

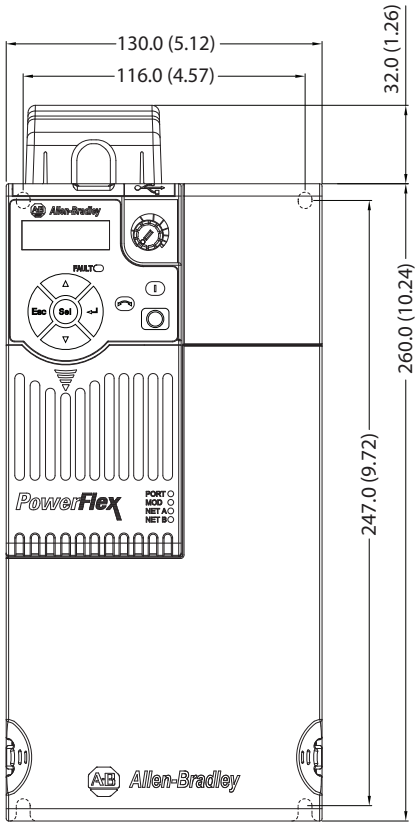

Frame E

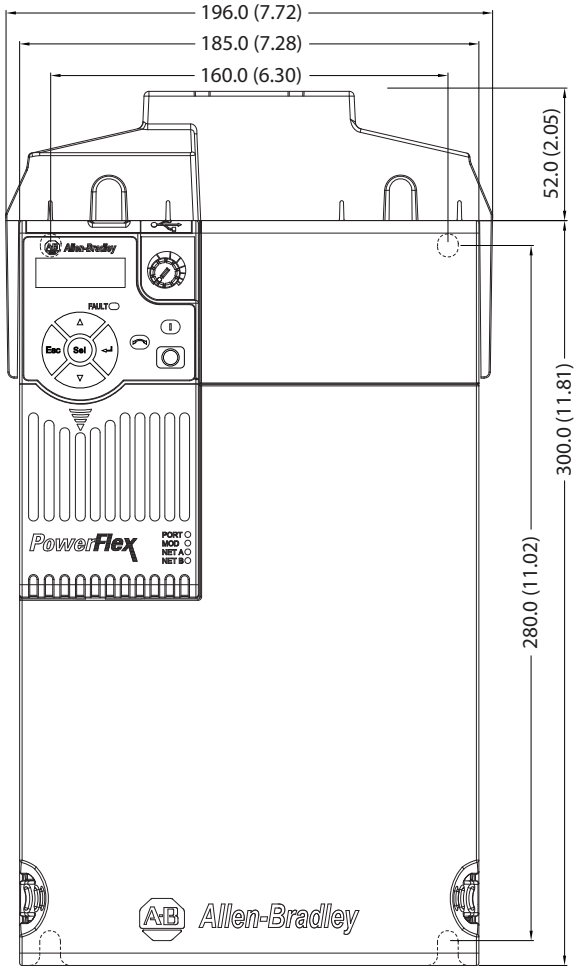

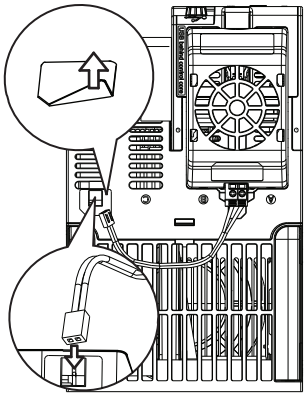

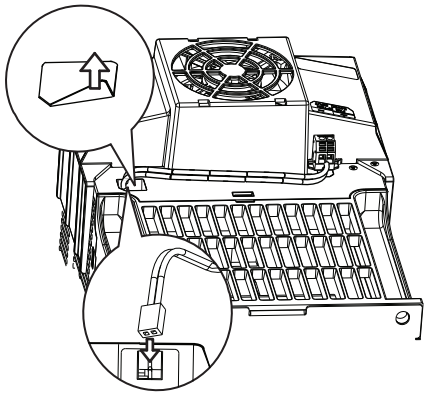

IMPORTANT Remove the label to access the built-in 24V supply on drive frames D and E for use with the Control Module Fan Kit.

IP 30/NEMA 1/UL Type 1 – Frame A

Dimensions are in millimeters and (inches)

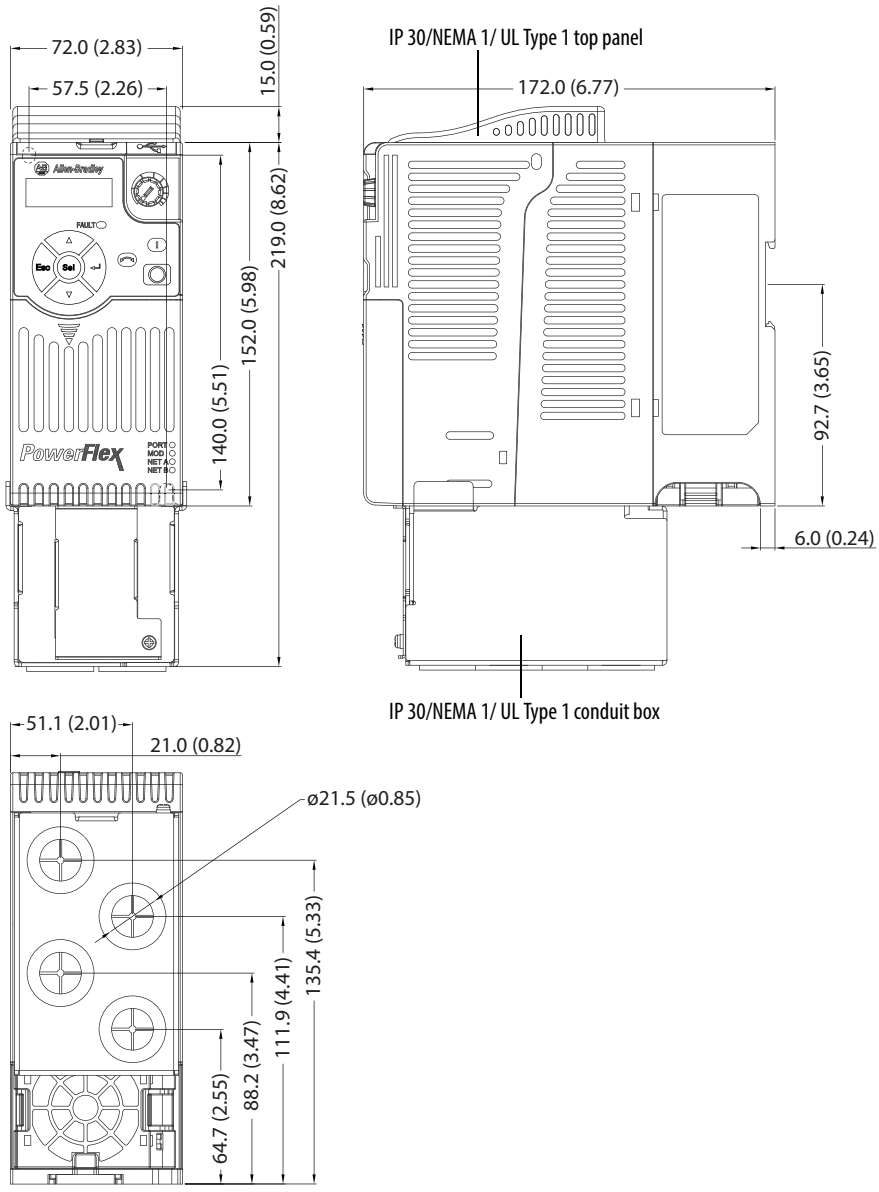

IP 30/NEMA 1/UL Type 1 – Frame B

Dimensions are in millimeters and (inches)

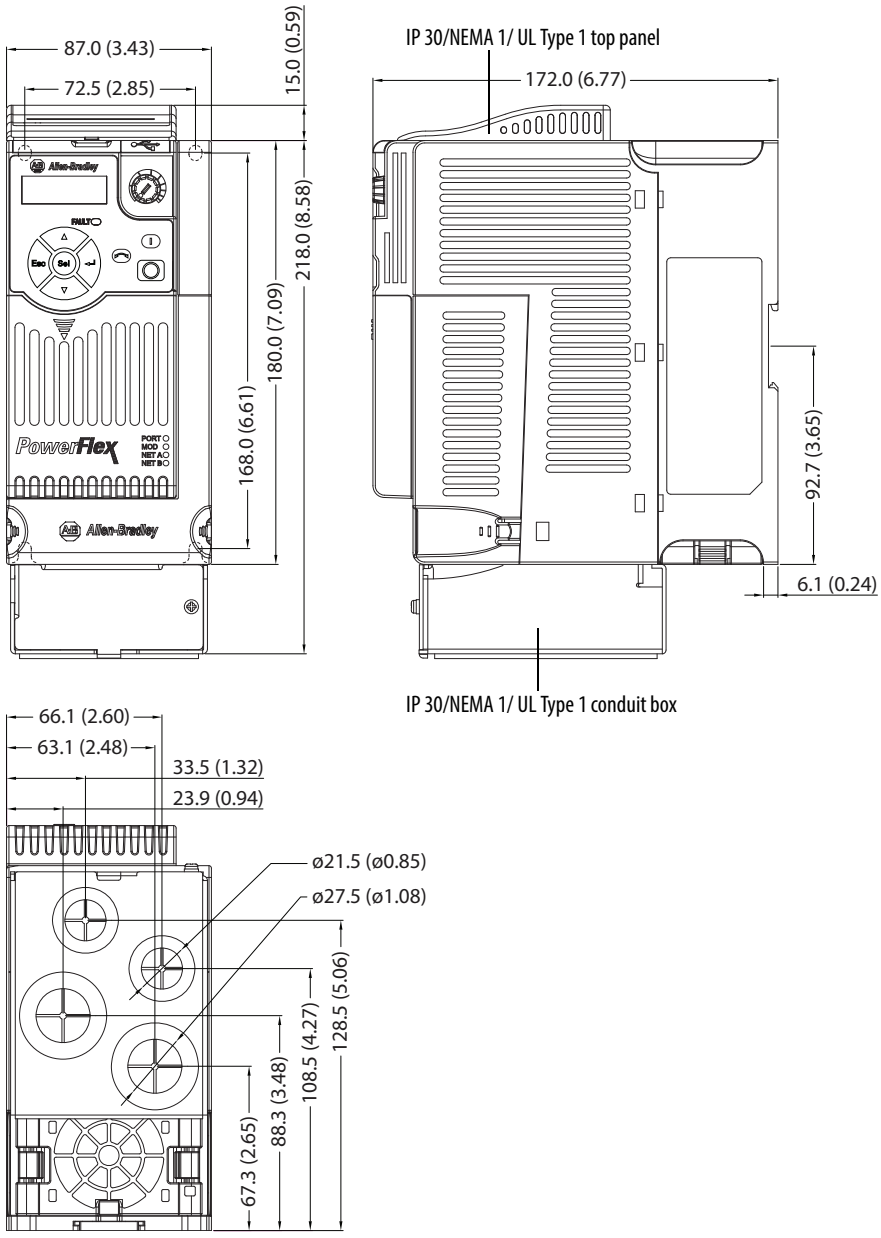

IP 30/NEMA 1/UL Type 1 – Frame C

Dimensions are in millimeters and (inches)

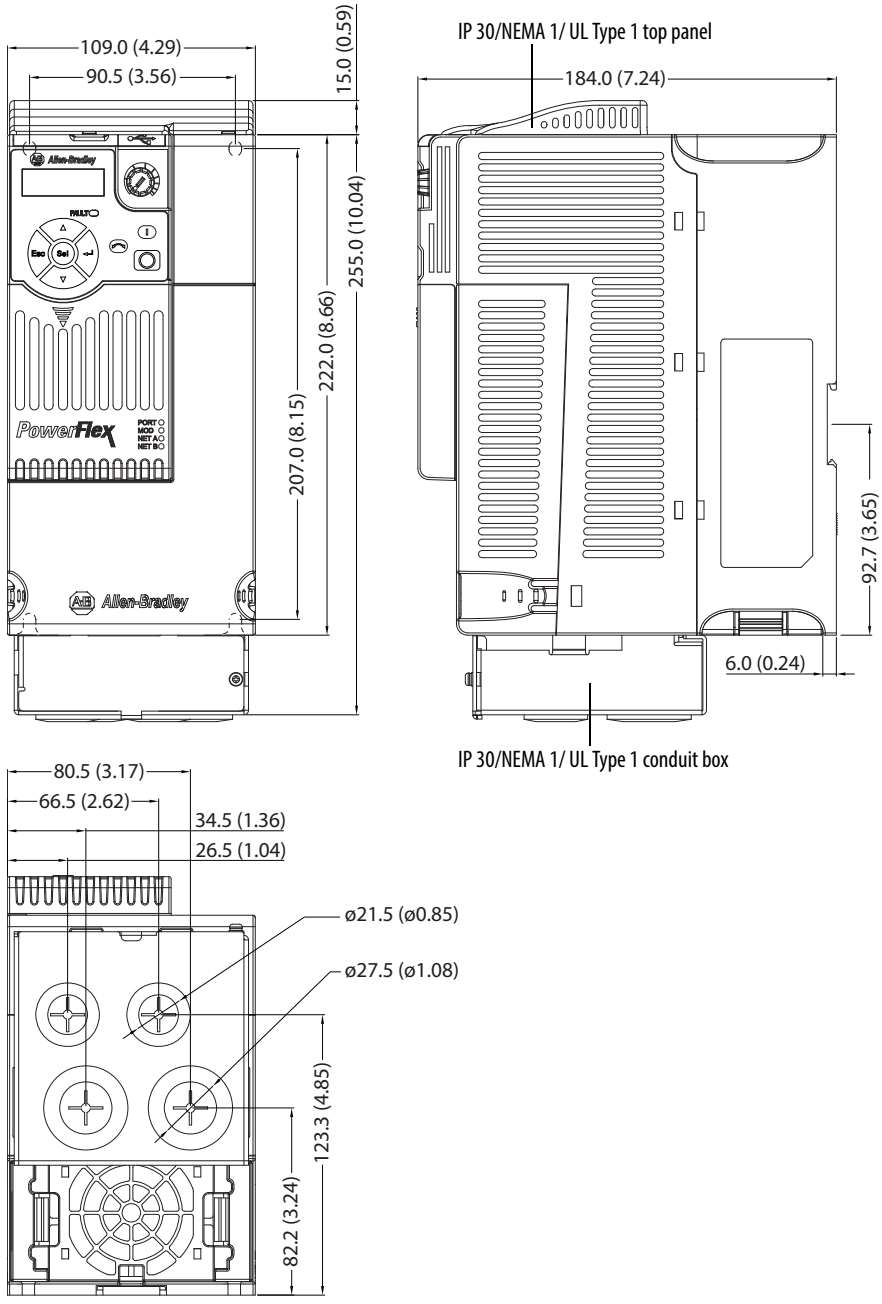

IP 30/NEMA 1/UL Type 1 – Frame D

Dimensions are in millimeters and (inches)

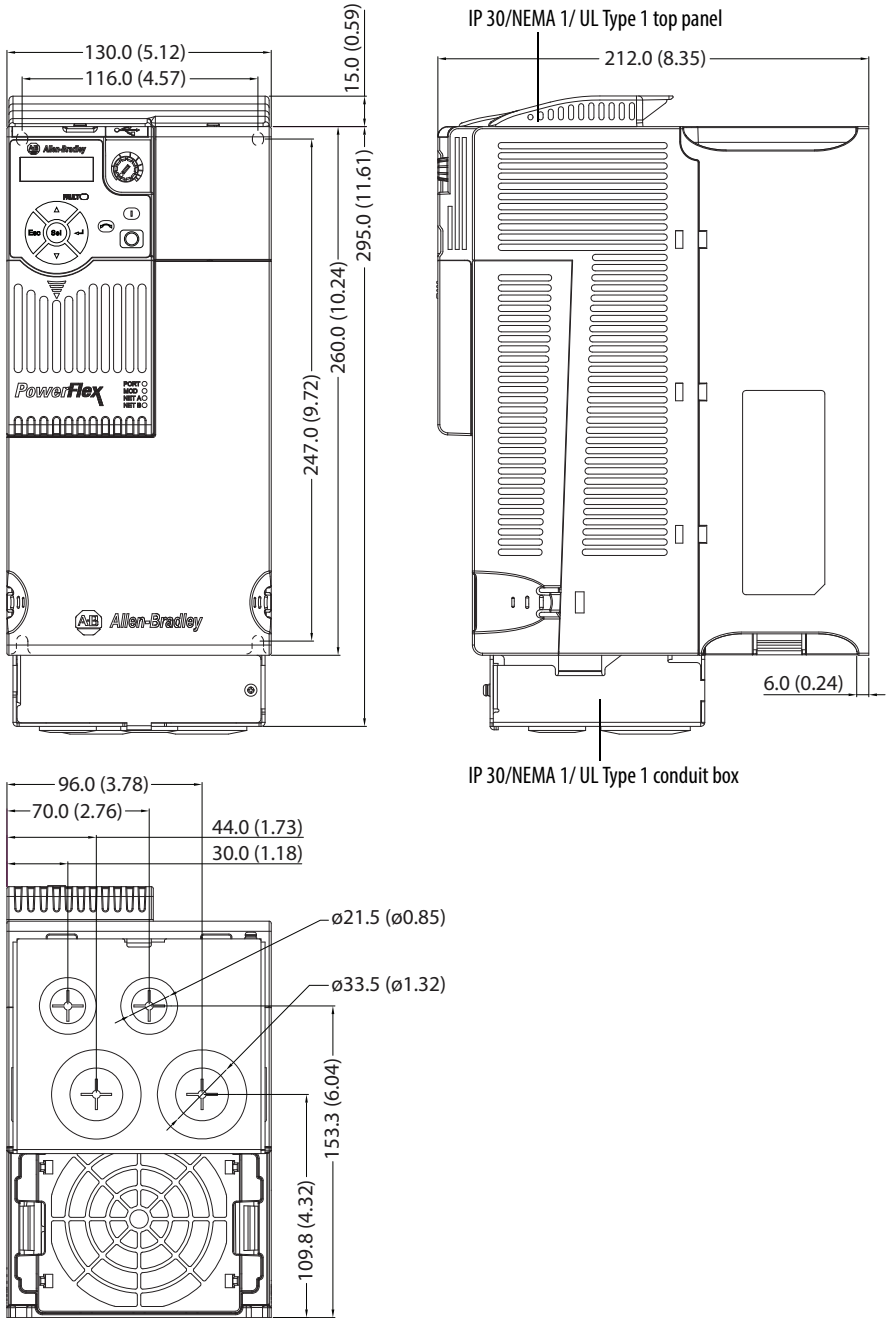

IP 30/NEMA 1/UL Type 1 – Frame E

Dimensions are in millimeters and (inches)

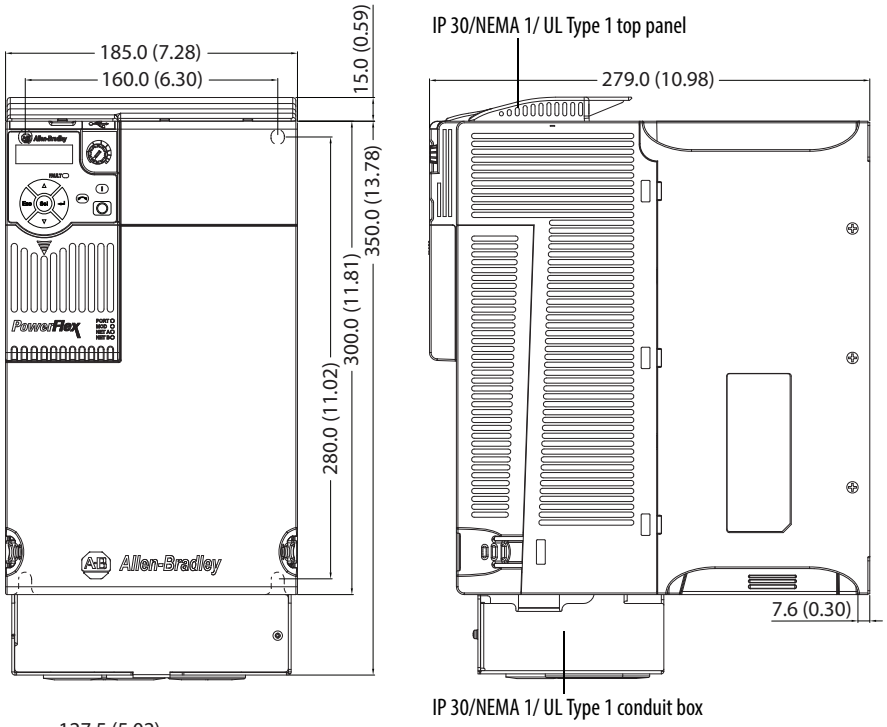

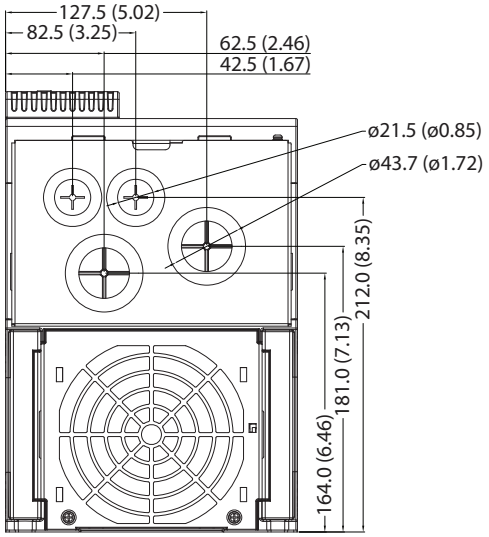

EMC Line Filter – Frame A

Dimensions are in millimeters and (inches)

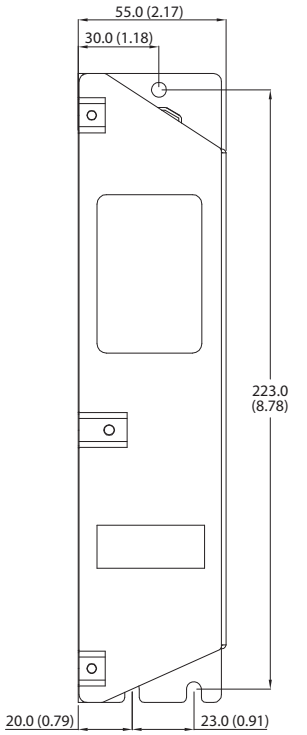

Filter can be mounted onto the back of the drive.

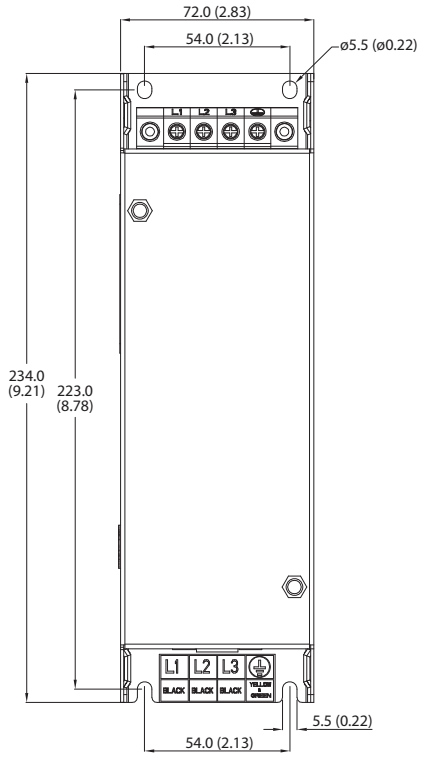

EMC Line Filter – Frame B

Dimensions are in millimeters and (inches)

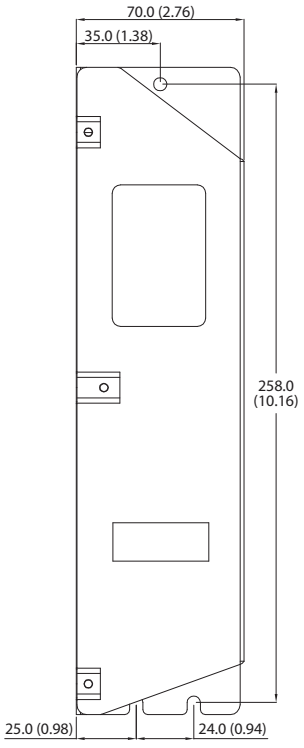

Filter can be mounted onto the back of the drive.

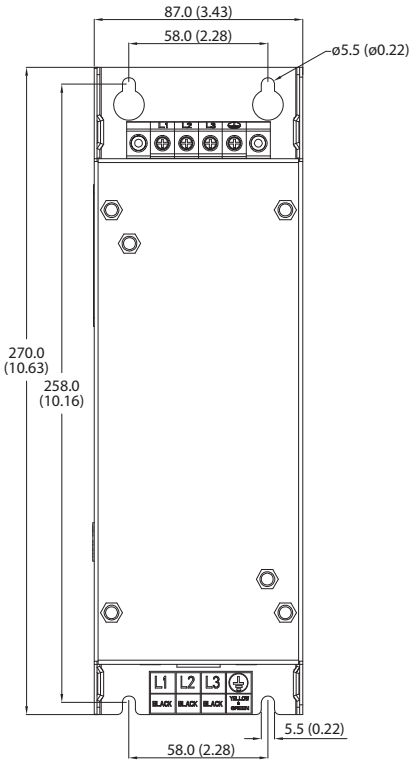

EMC Line Filter – Frame C

Dimensions are in millimeters and (inches)

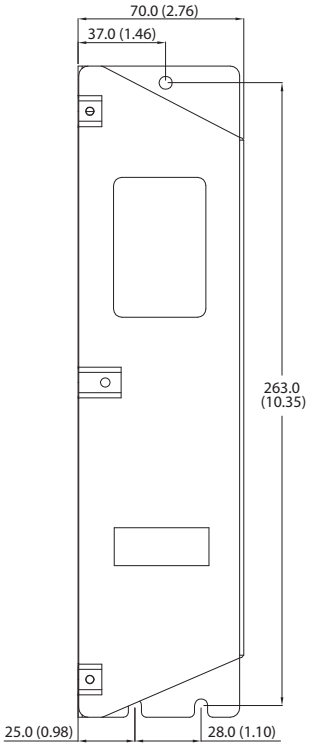

Filter can be mounted onto the back of the drive.

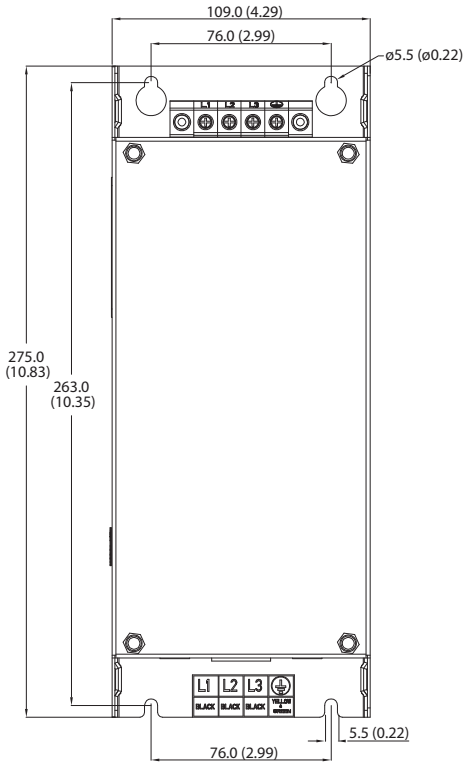

EMC Line Filter – Frame D

Dimensions are in millimeters and (inches)

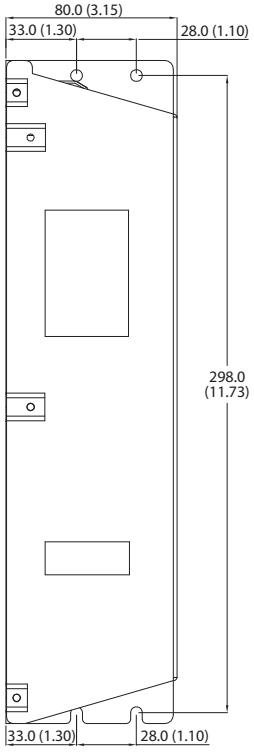

Filter can be mounted onto the back of the drive.

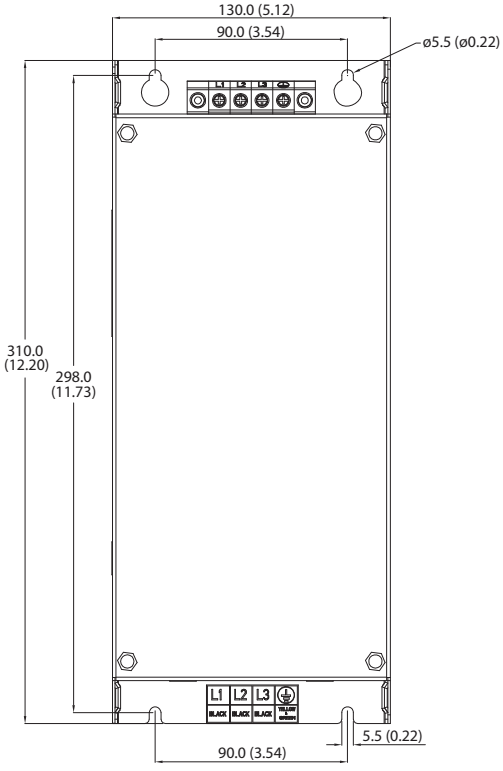

EMC Line Filter – Frame E

Dimensions are in millimeters and (inches)

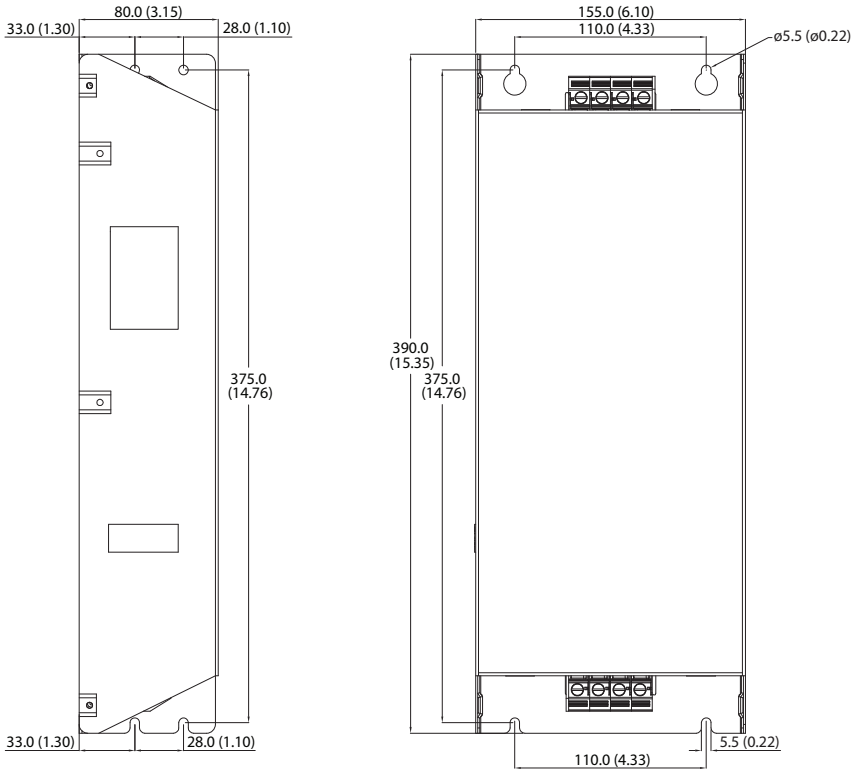

Optional Accessories and Kits Installing a Communication Adapter

1. Insert the communication adapter interface connector into the Control Module. Make sure the indicator line on the connector is aligned with the surface of the Control Module.

For PowerFlex 523

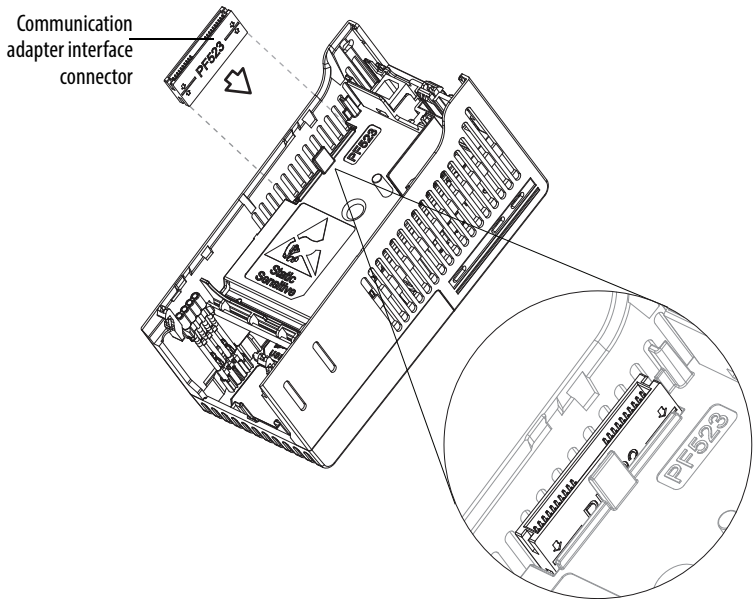

For PowerFlex 525

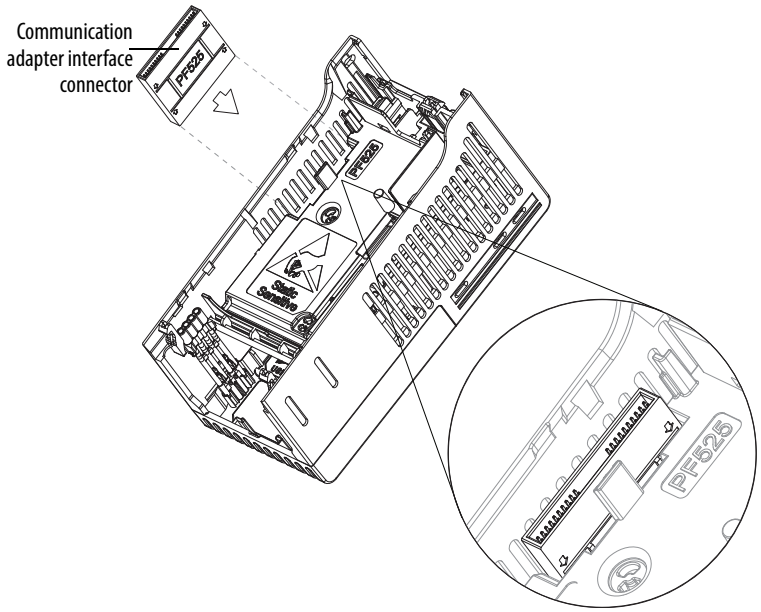

2. Align the connectors on the communication adapter to the communication adapter interface connector, then push the back cover down.

3. Press along the edges of the back cover until it snaps firmly into place.

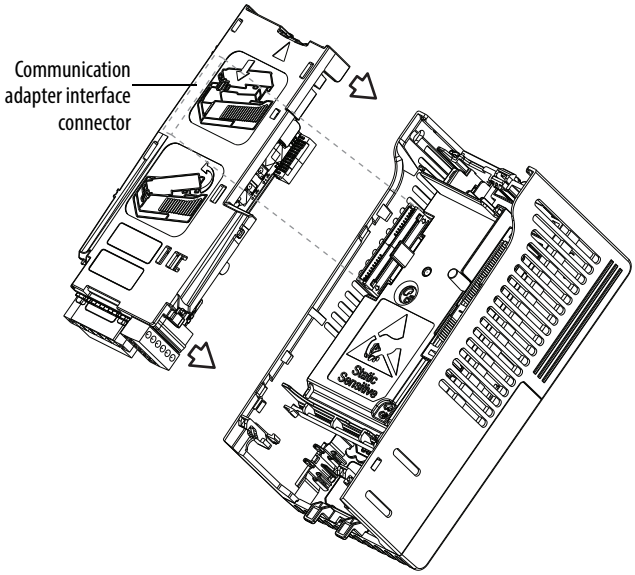

Removing a Communication Adapter

1. Insert a finger into the slot at the top of the back cover. Lift to separate the back cover from the Control Module.

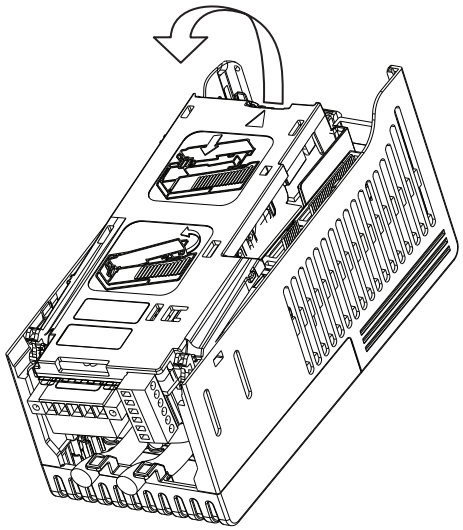

Notes:

RS485 (DSI) Protocol

PowerFlex 520-series drives support the RS485 (DSI) protocol to allow efficient operation with Rockwell Automation peripherals. In addition, some Modbus functions are supported to allow simple networking. PowerFlex 520-series drives can be multi-dropped on an RS485 network using Modbus protocol in RTU mode.

PowerFlex 520-Series Drive Network

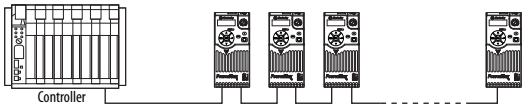

For information regarding EtherNet/IP or other communication protocols, refer to the appropriate user manual.

Network Wiring

Network wiring consists of a shielded 2-conductor cable that is daisy-chained from node to node.

ATTENTION: Never attempt to connect a Power over Ethernet (PoE) cable to the RS485 port. Doing so may damage the circuitry.

Network Wiring Diagram Example

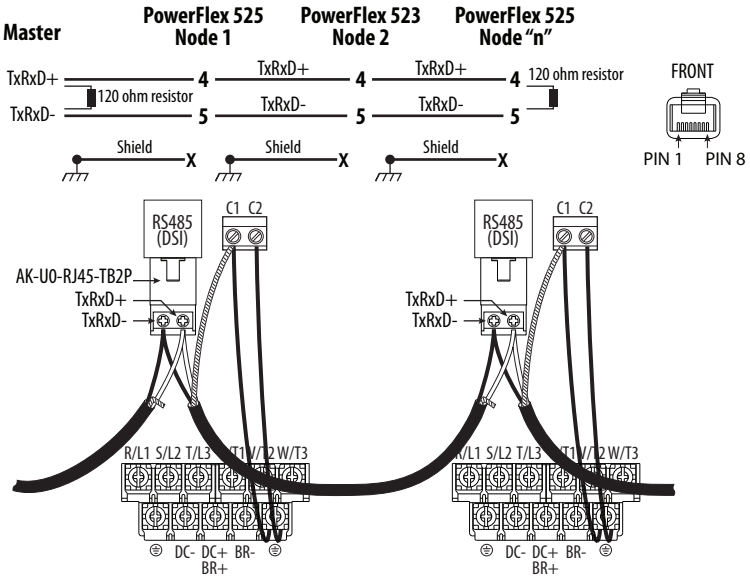

IMPORTANT The shield is connected at ONLY ONE end of each cable segment.

Only pins 4 and 5 on the RJ45 plug should be wired. The other pins on the PowerFlex 520-series drive's RJ45 socket must not be connected because they contain power, etc. for other Rockwell Automation peripheral devices.

Wiring terminations on the master controller will vary depending on the master controller used and "TxRxD+" and "TxRxD-" are shown for illustration purposes only. Refer to the master controller's user manual for network terminations. Note that there is no standard for the "+" and "-" wires, and consequently Modbus device manufacturers interpret them differently. If you have problems with initially establishing communications, try swapping the two network wires at the master controller.

Standard RS485 wiring practices apply.

- Termination resistors need to be applied at each end of the network cable.
- RS485 repeaters may need to be used for long cable runs, or if greater than 32 nodes are needed on the network.
- Network wiring should be separated from power wires by at least 0.3 meters (1 foot).
- Network wiring should only cross power wires at a right angle.

I/O Terminal C1 (RJ45 Shield) for the Ethernet and DSI network cables on the PowerFlex 520-series drive must also be connected to PE ground (there are two PE terminals on the drive). The shield for the network cables should be connected to PE ground at one end only.

I/O Terminal C2 (Comm Common) is internally tied to Network Common for the network signals, and NOT to RJ45 Shield. Tying I/O Terminal C2 to PE ground may improve noise immunity in some applications.

See I/O Control Terminal Designations on page 40 and page 43 for more information.

Parameter Configuration

The following PowerFlex 520-series drive parameters are used to configure the drive to operate on a DSI network.

Configuring Parameters for DSI Network

Parameter	Details	Reference
P046 [Start Source 1]	Set to 3 "Serial/DSI" if Start is controlled from the network.	page 87
P047 [Speed Reference1]	Set to 3 "Serial/DSI" if the Speed Reference is controlled from the network.	page 87
C123 [RS485 Data Rate]	Sets the data rate for the RS485 (DSI) Port. All nodes on the network must be set to the same data rate.	page 101
C124 [RS485 Node Addr]	Sets the node address for the drive on the network. Each device on the network requires a unique node address.	page 101
C125 [Comm Loss Action]	Selects the drive's response to communication problems.	page 101
C126 [Comm Loss Time]	Sets the time that the drive will remain in communication loss before the drive implements C125 [Comm Loss Action].	page 101
C127 [Comm Format]	Sets the transmission mode, data bits, parity and stop bits for the RS485 (DSI) Port. All nodes on the network must be set to the same setting.	page 102
C121 [Comm Write Mode]	Set to 0 "Save" when programming drive. Set to 1 "RAM only" to only write to volatile memory.	page 101

Supported Modbus Function Codes

The peripheral interface (DSI) used on PowerFlex 520-series drives supports some of the Modbus function codes.

Supported Modbus Function Codes

Modbus Function Code (Decimal)	Command
03	Read Holding Registers
06	Preset (Write) Single Register
16 (10 Hexadecimal)	Preset (Write) Multiple Registers

IMPORTANT Modbus devices can be 0-based (registers are numbered starting at 0) or 1-based (registers are numbered starting at 1). Depending on the Modbus Master used, the register addresses listed on the following pages may need to be offset by +1. For example, Logic Command may be register address 8192 for some master devices (e.g. ProSoft 3150-MCM SLC Modbus scanner) and 8193 for others (e.g. PanelViews).

Writing (06) Logic Command Data

The PowerFlex 520-series drive can be controlled through the network by sending Function Code 06 writes to register address 2000H (Logic Command). P046 [Start Source 1] must be set to 3 "Serial/DSI" in order to accept the commands. PowerFlex 523 drives support only Velocity bit definitions. PowerFlex 525 drives can use Parameter C122 [Cmd Stat Select] to select either Velocity or Position bit definitions.

TIP Powerup/Reset the drive after selecting an option for C122 [Cmd Stat Select] for the change to take effect.

Velocity Bit Definitions

Comm Logic Command – C122 = 0 "Velocity"		
Address (Decimal)	**Bit(s)**	**Description**
2000H (8192)	0	1 = Stop, 0 = Not Stop
	1	1 = Start, 0 = Not Start
	2	1 = Jog, 0 = No Jog
	3	1 = Clear Faults, 0 = Not Clear Faults
	5, 4	00 = No Command
		01 = Forward Command
		10 = Reverse Command
		11 = No Command
	6	1 = Force Keypad Control, 0 = Not Force Keypad Control
	7	1 = MOP Increment, 0 = Not Increment
	9, 8	00 = No Command
		01 = Accel Rate 1 Enable
		10 = Accel Rate 2 Enable
		11 = Hold Accel Rate Selected
	11, 10	00 = No Command
		01 = Decel Rate 1 Enable
		10 = Decel Rate 2 Enable
		11 = Hold Decel Rate Selected
	14, 13, 12	000 = No Command
		001 = Freq. Source = P047 [Speed Reference1]
		010 = Freq. Source = P049 [Speed Reference2]
		011 = Freq. Source = P051 [Speed Reference3]
		100 = A410 [Preset Freq 0]
		101 = A411 [Preset Freq 1]
		110 = A412 [Preset Freq 2]
		111 = A413 [Preset Freq 3]
	15	1 = MOP Decrement, 0 = Not Decrement

Position Bit Definitions

Comm Logic Command – C122 = 1 "Position"		
Address (Decimal)	**Bit(s)**	**Description**
2000H (8192)	0	1 = Stop, 0 = Not Stop
	1	1 = Start, 0 = Not Start
	2	1 = Jog, 0 = No Jog
	3	1 = Clear Faults, 0 = Not Clear Faults
	5, 4	00 = No Command
		01 = Forward Command
		10 = Reverse Command
		11 = No Command
	6	1 = Logic In 1
	7	1 = Logic In 2
	10, 9, 8	000 = Freq. and Position Step 0
		001 = Freq. and Position Step 1
		010 = Freq. and Position Step 2
		011 = Freq. and Position Step 3
		100 = Freq. and Position Step 4
		101 = Freq. and Position Step 5
		110 = Freq. and Position Step 6
		111 = Freq. and Position Step 7
	11	1 = Find Home
	12	1 = Hold Step
	13	1 = Pos Redefine
	14	1 = Sync Enable
	15	1 = Traverse Disable

Writing (06) Comm Frequency Command

The PowerFlex 520-series drive Comm Frequency Command can be controlled through the network by sending Function Code 06 writes to register address 2001H (Comm Frequency Command).

Comm Frequency Command

Reference	
Address (Decimal)	**Description**
2001H (8193)	Used by internal comm modules to control the reference of the drive. In units of 0.01 Hz.

Reading (03) Logic Status Data

The PowerFlex 520-series drive Logic Status data can be read through the network by sending Function Code 03 reads to register address 2100H (Logic Status). PowerFlex 523 drives support only Velocity bit definitions. PowerFlex 525 drives can use Parameter C122 [Cmd Stat Select] to select either Velocity or Position bit definitions.

Velocity Bit Definitions

Comm Logic Status – C122 = 0 "Velocity"		
Address (Decimal)	**Bit(s)**	**Description**
2100H (8448)	0	1 = Ready, 0 = Not Ready
	1	1 = Active (Running), 0 = Not Active
	2	1 = Cmd Forward, 0 = Cmd Reverse
	3	1 = Rotating Forward, 0 = Rotating Reverse
	4	1 = Accelerating, 0 = Not Accelerating
	5	1 = Decelerating, 0 = Not Decelerating
	6	Not Used
	7	1 = Faulted, 0 = Not Faulted
	8	1 = At Reference, 0 = Not At Reference
	9	1 = Main Freq Controlled by Active Comm
	10	1 = Operation Cmd Controlled by Active Comm
	11	1 = Parameters have been locked
	12	Digital Input 1 Status (DigIn TermBlk 05)
	13	Digital Input 2 Status (DigIn TermBlk 06)
	14	Digital Input 3 Status (DigIn TermBlk 07)
	15	Digital Input 4 Status (DigIn TermBlk 08)

Position Bit Definitions

Comm Logic Status – C122 = 1 "Position"		
Address (Decimal)	**Bit(s)**	**Description**
2100H (8448)	0	1 = Ready, 0 = Not Ready
	1	1 = Active (Running), 0 = Not Active
	2	1 = Cmd Forward, 0 = Cmd Reverse
	3	1 = Rotating Forward, 0 = Rotating Reverse
	4	1 = Accelerating, 0 = Not Accelerating
	5	1 = Decelerating, 0 = Not Decelerating
	6	1 = Forward Travel Position, 0 = Reverse Travel Position
	7	1 = Faulted, 0 = Not Faulted
	8	1 = At Reference, 0 = Not At Reference
	9	1 = At Position, 0 = Not At Position
	10	1 = At Home, 0 = Not At Home
	11	1 = Drive Homed, 0 = Not Drive Homed
	12	1 = Sync Hold, 0 = Not Sync Hold
	13	1 = Sync Ramp, 0 = Not Sync Ramp
	14	1 =Traverse On, 0 = Traverse Off
	15	1 = Traverse Decel, 0 = Not Traverse Decel

Reading (03) Drive Error Codes

The PowerFlex 520-series Error Code data can be read through the network by sending Function Code 03 reads to register address 2101H (Drive Error Codes).

Drive Error Codes

Logic Status		
Address (Decimal)	**Value (Decimal)**	**Description**
2101H (8449)	0	No Fault
	2	Auxiliary Input
	3	Power Loss
	4	Undervoltage
	5	Overvoltage
	6	Motor Stalled
	7	Motor Overload
	8	Heatsink Overtemperature
	9	Control Module Overtemperature
	12	HW Overcurrent (300%)
	13	Ground Fault
	15	Load Loss
	21	Output Phase Loss
	29	Analog Input Loss
	33	Auto Restart Tries
	38	Phase U to Ground Short
	39	Phase V to Ground Short
	40	Phase W to Ground Short
	41	Phase UV Short
	42	Phase UW Short
	43	Phase VW Short
	48	Parameters Defaulted
	59	Safety Open
	63	Software Overcurrent
	64	Drive Overload
	70	Power Unit Fail
	71	DSI Network Loss
	72	Option Card Network Loss
	73	Embedded EtherNet/IP Adapter Network Loss
	80	AutoTune Fail
	81	DSI Communication Loss
	82	Option Card Communication Loss
	83	Embedded EtherNet/IP Adapter Communication Loss
	91	Encoder Loss
	94	Function Loss
	100	Parameter Checksum Error
	101	External Storage
	105	Control Module Connect Error
	106	Incompatible Control-Power Module
	107	Unrecognized Control-Power Module
	109	Mismatched Control-Power Module
	110	Keypad Membrane
	111	Safety Hardware
	114	Microprocessor Failure
	122	I/O Board Fail

Drive Error Codes

Logic Status		
Address (Decimal)	**Value (Decimal)**	**Description**
2101H (8449)	125	Flash Update Required
	126	Non Recoverable Error
	127	DSI Flash Update Required

Reading (03) Drive Operational Values

The PowerFlex 520-series Drive Operational Values can be read through the network by sending Function Code 03 reads to register addresses 2102H...210AH.

Drive Operational Values

Reference	
Address (Decimal)	**Description**
2102H (8450)	Frequency Command (xxx.xx Hz)
2103H (8451)	Output Frequency (xxx.xx Hz)
2104H (8452)	Output Current (xxx.xx A)
2105H (8453)	DC-BUS Voltage (xxxV)
2106H (8454)	Output Voltage (xxx.xV)

Reading (03) and Writing (06) Drive Parameters

To access drive parameters, the Modbus register address equals the parameter number. For example, a decimal “1” is used to address Parameter b001 [Output Freq] and decimal “41” is used to address Parameter P041 [Accel Time 1].

Additional Information

See http://www.ab.com/drives/ for additional information.

Velocity StepLogic, Basic Logic and Timer/ Counter Functions

Four PowerFlex 520-series logic functions provide the capability to program simple logic functions without a separate controller.

- Velocity StepLogic™ Function (specific to PowerFlex 525 drives only)

  Steps through up to eight preset speeds based on programmed logic. Programmed logic can include conditions that need to be met from digital inputs programmed as "Logic In 1" and "Logic In 2" before stepping from one preset speed to the next. A timer is available for each of the eight steps and is used to program a time delay before stepping from one preset speed to the next. The status of a digital output can also be controlled based on the step being executed.
- Basic Logic Function (specific to PowerFlex 525 drives only)

  Up to two digital inputs can be programmed as "Logic In 1" and/or "Logic In 2". A digital output can be programmed to change state based on the condition of one or both inputs based on basic logic functions such as AND, OR, NOR. The basic logic functions can be used with or without StepLogic.
- Timer Function

  A digital input can be programmed for "Timer Start". A digital output can be programmed as a "Timer Out" with an output level programmed to the desired time. When the timer reaches the time programmed into the output level the output will change state. The timer can be reset with a digital input programmed as "Reset Timer".
- Counter Function

  A digital input can be programmed for "Counter In". A digital output can be programmed as "Counter Out" with an output level programmed to the desired number of counts. When the counter reaches the count programmed into the output level the output will change state. The counter can be reset with a digital input programmed as "Reset Counter".

TIP Use the Wizard in Connected Components Workbench to simplify setup instead of manually configuring the parameters.

Velocity StepLogic Using Timed Steps

IMPORTANT This function is specific to PowerFlex 525 drives only.

To activate this function, set one of the three speed reference sources, parameter P047, P049 or P051[Speed Referencex] to 13 "Step Logic" and activate that speed reference source. Three parameters are used to configure the logic, speed reference and time for each step.

- Logic is defined using parameters L180...L187 [Stp Logic x].
- Preset Speeds are set with parameters A410...A417 [Preset Freq 0...7].
- Time of operation for each step is set with parameters L190...L197 [Stp Logic Time x].

The direction of motor rotation can be forward or reverse.

Using Timed Steps

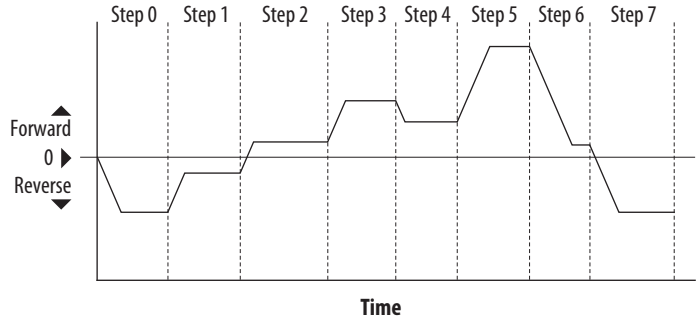

Velocity StepLogic Sequence

- Sequence begins with a valid start command.
- A normal sequence begins with Step 0 and transition to the next step when the corresponding StepLogic time has expired.
- Step 7 is followed by Step 0
- Sequence repeats until a stop is issued or a fault condition occurs.

Velocity StepLogic Using Basic Logic Functions

IMPORTANT This function is specific to PowerFlex 525 drives only.

Digital input and digital output parameters can be configured to use logic to transition to the next step. Logic In 1 and Logic In 2 are defined by programming parameters t062...t063, t065...t068 [DigIn TermBlk xx] to 24 "Logic In 1" or 25 "Logic In 2".

Example

- Run at Step 0.
- Transition to Step 1 when Logic In 1 is true.
  Logic senses the edge of Logic In 1 when it transitions from off to on. Logic In 1 is not required to remain "on".

- Transition to Step 2 when both Logic In 1 and Logic In 2 are true. The drive senses the level of both Logic In 1 and Logic In 2 and transitions to Step 2 when both are on.
- Transition to Step 3 when Logic In 2 returns to a false or off state. Inputs are not required to remain in the "on" condition except under the logic conditions used for the transition from Step 2 to Step 3.

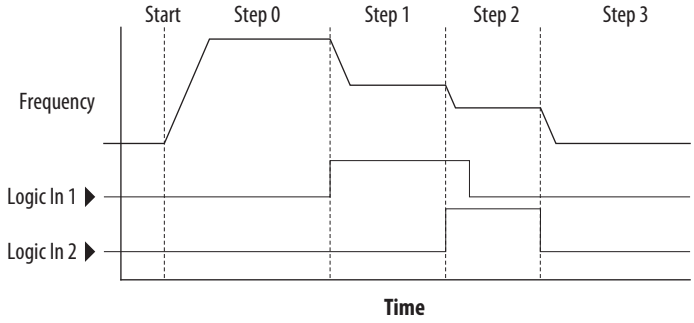

The step time value and the basic logic may be used together to satisfy machine conditions. For instance, the step may need to run for a minimum time period and then use the basic logic to trigger a transition to the next step.

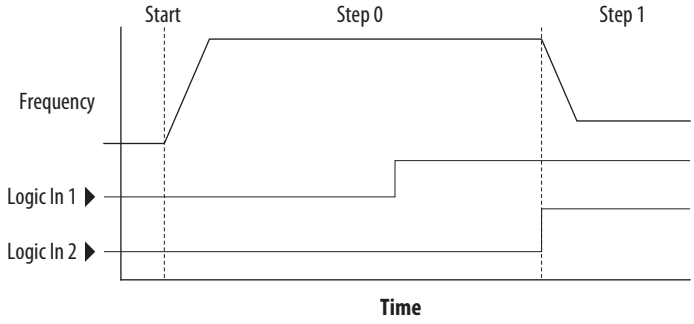

Timer Function

Digital inputs and outputs control the timer function and are configured with parameters t062...t063, t065...t068 [DigIn TermBlk xx] set to 19 "Timer Start" and 21 "Reset Timer".

Digital outputs (relay and opto type) define a preset level and indicate when the level is reached. Level parameters t077 [Relay Out1 Level], t082[Relay Out2 Level], t070 [Opto Out1 Level] and t073 [Opto Out2 Level] are used to set the desired time in seconds.

Parameters t076 [Relay Out1 Sel], t081 [Relay Out2 Sel], t069 [Opto Out1 Sel] and t072 [Opto Out2 Sel] are set to 25 "Timer Out" and causes the output to change state when the preset level is reached.

Example

- Drive starts up and accelerates to 30 Hz.
- After 30 Hz has been maintained for 20 seconds, a 4-20 mA analog input becomes the reference signal for speed control.

- The timer function is used to select a preset speed with a 20 second run time that overrides the speed reference while the digital input is active.
- Parameters are set to the following options:
  - P047 [Speed Reference1] = 6 “4-20mA Input”
  - P049 [Speed Reference2] = 7 “Preset Freq”
  - t062 [DigIn TermBlk 02] = 1 “Speed Ref 2”
  - t063 [DigIn TermBlk 03] = 19 “Timer Start”
  - t076 [Relay Out1 Sel] = 25 “Timer Out”
  - t077 [Relay Out1 Level] = 20.0 Secs
  - A411 [Preset Freq 1] = 30.0 Hz
- The control terminal block is wired such that a start command will also trigger the timer start.
- The relay output is wired to I/O Terminal 02 (DigIn TermBlk 02) so that it forces the input on when the timer starts.
- After the timer is complete, the output is turned off releasing the preset speed command. The drive defaults to following the analog input reference as programmed.

Note that a “Reset Timer” input is not required for this example since the “Timer Start” input both clears and starts the timer.

Counter Function

Digital inputs and outputs control the counter function and are configured with parameters t062...t063, t065...t068 [DigIn TermBlk xx] set to 20 “Counter In” and 22 “Reset Countr”.

Digital outputs (relay and opto type) define a preset level and indicate when the level is reached. Level parameters t077 [Relay Out1 Level], t082[Relay Out2 Level], t070 [Opto Out1 Level] and t073 [Opto Out2 Level] are used to set the desired count value.

Parameters t076 [Relay Out1 Sel], t081 [Relay Out2 Sel], t069 [Opto Out1 Sel] and t072 [Opto Out2 Sel] are set to 26 “Counter Out” which causes the output to change state when the level is reached.

Example

- A photo eye is used to count packages on a conveyor line.
- An accumulator holds the packages until 5 are collected.
- A diverter arm redirects the group of 5 packages to a bundling area.
- The diverter arm returns to its original position and triggers a limit switch that resets the counter.
- Parameters are set to the following options:
  - t065 [DigIn TermBlk 05] = 20 “Counter In”
  - t066 [DigIn TermBlk 06] = 22 “Reset Countr”
  - t076 [Relay Out1 Sel] = 26 “Counter Out”
  - t077 [Relay Out1 Level] = 5.0 Counts

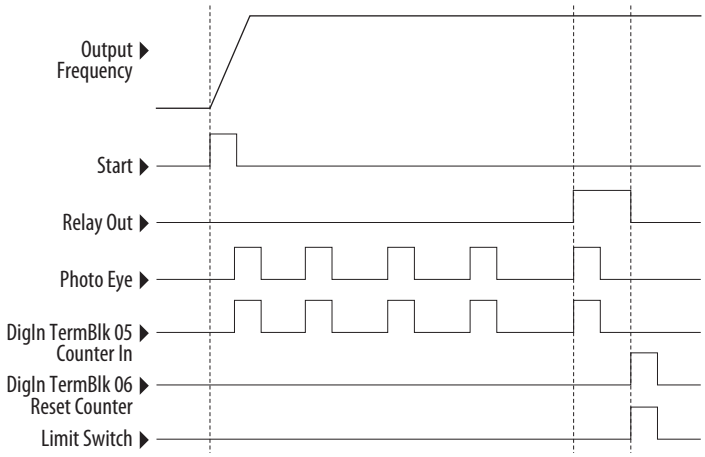

Velocity StepLogic Parameters

Code Descriptions for Parameters L180...L187

Digit 4	Digit 3	Digit 2	Digit 1
0	0	F	1

Digit 4 – Defines the action during the step currently executing

Setting	Accel/Decel Parameter Used	StepLogic Output State	Commanded Direction
0	1	Off	FWD
1	1	Off	REV
2	1	Off	No Output
3	1	On	FWD
4	1	On	REV
5	1	On	No Output
6	2	Off	FWD
7	2	Off	REV
8	2	Off	No Output
9	2	On	FWD
A	2	On	REV
b	2	On	No Output

Digit 3 – Defines what step to jump to or how to end program when the logic conditions specified in Digit 2 are met.

Setting	Logic
0	Jump to Step 0
1	Jump to Step 1
2	Jump to Step 2
3	Jump to Step 3
4	Jump to Step 4
5	Jump to Step 5
6	Jump to Step 6
7	Jump to Step 7
8	End Program (Normal Stop)
9	End Program (Coast to Stop)
A	End Program and Fault (F002)

Digit 2 – Defines what logic must be met to jump to a step other than the very next step.

Setting	Description	Logic
0	Skip Step (jump immediately)	SKIP
1	Step based on the time programmed in the respective [Stp Logic Time x] parameter.	TIMED
2	Step if "Logic In 1" is active (logically true)	TRUE
3	Step if "Logic In 2" is active (logically true)	TRUE
4	Step if "Logic In 1" is not active (logically false)	FALSE
5	Step if "Logic In 2" is not active (logically false)	FALSE
6	Step if either "Logic In 1" or "Logic In 2" is active (logically true)	OR
7	Step if both "Logic In 1" and "Logic In 2" is active (logically true)	AND
8	Step if neither "Logic In 1" or "Logic In 2" is active (logically true)	NOR
9	Step if "Logic In 1" is active (logically true) and "Logic In 2" is not active (logically false)	XOR
A	Step if "Logic In2" is active (logically true) and "Logic In 1" is not active (logically false)	XOR
b	Step after [Stp Logic Time x] and "Logic In 1" is active (logically true)	TIMED AND
C	Step after [Stp Logic Time x] and "Logic In 2" is active (logically true)	TIMED AND
d	Step after [Stp Logic Time x] and "Logic In 1" is not active (logically false)	TIMED OR
E	Step after [Stp Logic Time x] and "Logic In 2" is not active (logically false)	TIMED OR
F	Do not step OR no "jump to", so use Digit 0 logic	IGNORE

Digit 1 – Defines what logic must be met to jump to the very next step.

Setting	Description	Logic
0	Skip Step (jump immediately)	SKIP
1	Step based on the time programmed in the respective [Stp Logic Time x] parameter.	TIMED
2	Step if "Logic In 1" is active (logically true)	TRUE
3	Step if "Logic In 2" is active (logically true)	TRUE
4	Step if "Logic In 1" is not active (logically false)	FALSE
5	Step if "Logic In 2" is not active (logically false)	FALSE
6	Step if either "Logic In 1" or "Logic In 2" is active (logically true)	OR
7	Step if both "Logic In 1" and "Logic In 2" is active (logically true)	AND
8	Step if neither "Logic In 1" or "Logic In 2" is active (logically true)	NOR
9	Step if "Logic In 1" is active (logically true) and "Logic In 2" is not active (logically false)	XOR
A	Step if "Logic In 2" is active (logically true) and "Logic In 1" is not active (logically false)	XOR
b	Step after [Stp Logic Time x] and "Logic In 1" is active (logically true)	TIMED AND
C	Step after [Stp Logic Time x] and "Logic In 2" is active (logically true)	TIMED AND
d	Step after [Stp Logic Time x] and "Logic In 1" is not active (logically false)	TIMED OR
E	Step after [Stp Logic Time x] and "Logic In 2" is not active (logically false)	TIMED OR
F	Use logic programmed in Digit 1	IGNORE

Encoder/Pulse Train Usage and Position StepLogic Application

Encoder and Pulse Train Usage

The PowerFlex 520-series drives include a pulse train input built into the terminal block. PowerFlex 525 drives also support an optional encoder card. The pulse train and encoder can be used for many of the same functions, but the pulse train supports up to 100 kHz at 24V, and uses the drive built-in terminal block. The encoder supports up to 250 kHz dual channel at 5, 12 or 24V and requires the optional encoder board to be installed. When A535 [Motor Fdbk Type] is set to a value other than zero, the drive is set to use an encoder or pulse train. The drive will use the encoder or pulse train in several ways depending on the settings of other parameters. The drive will use the encoder or pulse train as shown below (listed in order of priority):

1. If enabled by P047, P049, or P051 [Speed Referencex], the encoder or pulse train will be used directly as a commanded speed (normally used with a pulse train) or as a position reference (normally used with a quadrature encoder).
2. If not enabled by the Speed Reference parameters, the encoder or pulse train can be used with the PID function if enabled by A459 or A471 [PID x Ref Sel], or A460 or A472 [PID x Fdback Sel].
3. If not enabled by the Speed Reference or PID function parameters, the encoder or pulse train can be used with A535 [Motor Fdbk Type] for direct feedback and trim of the speed command. The normal slip compensation is not used in this case. Instead the drive will use the encoder or pulse train to determine actual output frequency and adjust the output frequency to match the command. Parameters A538 [Ki Speed Loop] and A539 [Kp Speed Loop] are used in this control loop. The primary benefit of this mode is increased speed accuracy when compared to open-loop slip compensation. It does not provide speed bandwidth improvement.

IMPORTANT The encoder usage, and position StepLogic application covered in this chapter is specific to PowerFlex 525 drives only.

Encoder Interface

The incremental encoder option card can source 5 or 12 volt power and accept 5, 12 or 24 volt single ended or differential inputs. See Appendix B for ordering information.

IMPORTANT Only the 25-ENC-1 Encoder will work properly in the PowerFlex 525 drive. Installing an incorrect encoder card, such as the PowerFlex 527 25-ENC-2 will cause damage to the PowerFlex 525 drive.

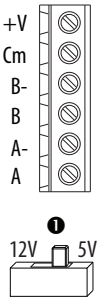

No.	Signal	Description
+V	5...12V Power(1)(2)	Internal power source 250 mA (isolated).
Cm	Power Return	
B-	Encoder B (NOT)	Quadrature B input.
B	Encoder B	
A-	Encoder A (NOT)	Single channel, pulse train or quadrature A input.
A	Encoder A	
❶	Output	DIP switch selects 12 or 5 volt power supplied at terminals "+V" and "Cm" for the encoder.

(1) When using 12V Encoder power, 24V I/O power, maximum output current at I/O Terminal 11 is 50 mA.
(2) If Encoder requires 24V power, it must be supplied by an external power source.

Encoder Wiring Examples

I/O	Connection Example
Encoder Power – Internal Drive Power Internal (drive) 12V DC, 250mA	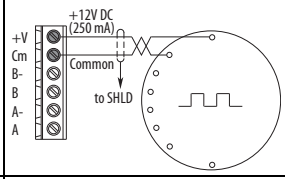
Encoder Signal – Single-Ended, Dual Channel	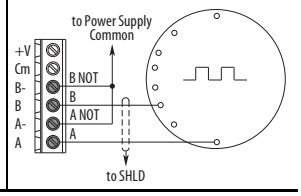

I/O	Connection Example
Encoder Power – External Power Source	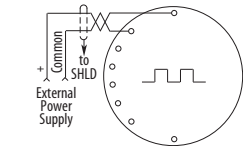
Encoder Signal – Differential, Dual Channel	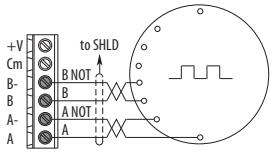

Wiring Notes

The encoder option card can supply 5V or 12V power (250 mA maximum) for an encoder. Be sure the DIP switch is set properly for the encoder. In general, 12V will provide higher noise immunity.

The encoder can handle 5V, 12V, or 24V inputs, but the pulse train can handle only 24V inputs. The inputs will automatically adjust to the voltage applied and no additional drive adjustment is necessary. If a single-channel input is used, it must be wired between the A (signal) and A- (signal common) channels.

IMPORTANT A quadrature encoder provides rotor speed and direction. Therefore, the encoder must be wired such that the forward direction matches the motor forward direction. If the drive is reading encoder speed but the position regulator or other encoder function is not working properly, remove power to the drive, then do one of the following:

- Swap the A and A (NOT) encoder channels.
- Swap the B and B (NOT) encoder channels.
- Swap any two motor leads.

Drives will fault when an encoder is incorrectly wired and A535 [Motor Fdbk Type] is set to 5 "Quad Check".

Determine Encoder Pulse Per Revolution (PPR) Specification Based on Speed Resolution

Use the following formula to determine the encoder pulse per revolution (PPR) specification based on the speed resolution.

$$\text{Speed resolution (Hz)} = \frac{\left(\frac{1}{\text{encoder pulse number} \times 4}\right) \times \text{pole pairs}}{10^{-3}\ \text{sec}}$$

TIP The operating speed range will depend on the motor control mode selected (SVC or VVC). For more information, see Performance with Encoder on page 170.

Example 1

To determine the PPR for quadrature encoder, to achieve 0.06 Hz of speed resolution on a 4-pole motor (2-pole pair) with a base speed of 60 Hz:

$$0.06\ \text{Hz} = \frac{\left(\frac{1}{\text{encoder pulse number} \times 4}\right) \times 2}{10^{-3}\ \text{sec}}$$

$$= \sim 8333\ \text{pulse}$$

Therefore, select 8333 PPR or higher for the quadrature encoder to achieve the desired speed resolution of 0.06 Hz.

Example 2

To determine the speed resolution, using a 1024 PPR quadrature incremental encoder on a 4-pole (2-pole pair) motor:

$$\text{Speed resolution (Hz)} = \frac{\left(\frac{1}{1024 \times 4}\right) \times 2}{10^{-3}\ \text{sec}}$$

$$= 0.49\ \text{Hz}$$

Therefore, using a 1024 PPR quadrature encoder will give a speed resolution of 0.49 Hz.

Positioning Overview

The PowerFlex 525 drive includes a simple position regulator which can be used in a variety of position applications without the need for multiple limit switches or photo-eyes. This can be used as a stand-alone controller for simple applications (up to 8 positions) or in conjunction with a controller for more flexibility.

Please note that this is not intended to replace high end servo controllers or any application that needs high bandwidth or very high torque at low speeds.

Common Guidelines for All Applications

The position regulator can be configured for operation appropriate for a variety of applications. Certain parameters will need to be adjusted in all cases.

P047 [Speed Reference1] must be set to 16 "Positioning".

A535 [Motor Fdbk Type] must be set to the match the feedback device. Positioning mode must use A535 [Motor Fdbk Type] option 4.

A535 [Motor Fdbk Type] Options

0 "None" indicates no encoder is used. This can not be used for positioning.

1 "Pulse Train" is a single channel input, no direction, speed feedback only. This should not be used for positioning. The Single Channel selection is similar to a Pulse Train, but uses the standard encoder scaling parameters.

2 "Single Chan" is a single channel input, no direction, speed feedback only. This should not be used for positioning. Single channel uses the standard encoder scaling parameters.

3 "Single Check" is a single channel input with encoder signal loss detection. The drive will fault if it detects that the input pulses do not match the expected motor speed. This should not be used for positioning.

4 "Quadrature" is a dual channel encoder input with direction and speed from the encoder. This may be used for positioning control.

5 "Quad Check" is a dual channel encoder with encoder signal loss detection. The drive will fault if it detects that the encoder speed does not match the expected motor speed.

A544 [Reverse Disable] should be set to 0 "Rev Enabled" to allow bidirectional movement necessary for position control.

P039 [Torque Perf Mode] default setting is 1 "SVC". However, any mode can be used to improve the low speed torque for positioning applications. For best results, tune the application first. The autotune routine can be completed to further improve the drive-motor performance.

A550 [Bus Reg Enable] default setting is 1 “Enabled”. If the deceleration time is too short, the drive may overshoot the desired position. For best results, a longer deceleration time may be necessary. A550 [Bus Reg Enable] can be disabled to provide precise stopping movements, but the deceleration time will need to be manually tuned so that it is long enough to avoid F005 “OverVoltage” faults.

A437 [DB Resistor Sel] default setting is 0 “Disabled”. If improved deceleration performance is required a Dynamic Brake resistor can be used. If used, this parameter should be set to the appropriate setting for the resistor selected.

P035 [Motor NP Poles] must be set to match the number of motor poles on the motor driven by the PowerFlex 520-series drive.

A536 [Encoder PPR] must be set to match the number of pulses per revolution of the encoder used (i.e., 1024 PPR Encoder).

A559 [Counts Per Unit] sets the number of encoder counts that will be used to define one position unit. This allows the encoder positions to be defined in terms of units important to the application. For example, if 1cm of travel on a conveyor belt requires 0.75 turns of the motor, the motor encoder is 1024 PPR, and the Motor Feedback type is set to Quadrature, then this parameter would need to be set to (4 x 1024 x 0.75) = 3072 counts for one cm of travel. Then all other positions could be setup in units of “cm”.

A564 [Encoder Pos Tol] indicates the desired position tolerance for the system. This will determine how close the drive must be to the commanded position before the drive will indicate “At Home” or “At Position” in units of raw encoder pulses. This has no effect on the actual positioning control of the motor.

Positioning Operation

Parameter A558 [Positioning Mode] must be set to properly match the desired operation of the positioning function.

A558 [Positioning Mode] Options

0 "Time Steps" uses Step Logic times. This mode ignores the Step Logic settings and moves through the steps (Step 0 to Step 7 and back to Step 0) based on the times programmed into L190...L197 [Stp Logic Time x]. This can be used when the desired position is based only on time. In addition, this mode only accepts absolute positions in a positive direction from "home". This option provides an easy way to implement a simple positioning program or to test the basic positioning setup. For additional flexibility one of the other settings should be used.

1 "Preset Input" directly commands movement to any step based on the status of the digital inputs programmed for "Preset Freq". This setting ignores the Step Logic Commands settings and instead the drive will move directly to whatever step is currently commanded by A410...A425 [Preset Freq x] and L200...L214 [Step Units x]. This is useful when an application needs direct access to any position step based on discrete inputs. This mode moves in the forward direction from Home and is an absolute move.

IMPORTANT Advanced Step Logic options such as incremental move are not available in this mode.

2 "Step Logic" provides a highly flexible mode of operation. This can be used to move through the steps (Step 0 to Step 7 and back to Step 0) or can jump to a different step at any time based on time or the status of digital inputs or communication commands. In this mode the drive always starts at Step 0 of the Step Logic profile.

3 "Preset StpL" is identical to 2 "Step Logic" except the drive will use the current status of the Preset Inputs to determine which Step Logic step to begin. This only affects the initial step. After start, the drive will move through the steps in the same manner as if setting 2 was selected.

4 "StpLogic-Lst" is identical to 2 "Step Logic" except the drive will use the step prior to its last stop command to determine which Step Logic step to begin. This only affects the initial step. After start, the drive will move through the steps in the same manner as if setting 2 was selected. This allows a process to be stopped and then restarted at the position where it stopped.

In all position modes, the following parameters will control the characteristics at each step:

L200, L202, L204, L206, L208, L210, L212 and L214 [Step Units x] are the number value to the left of the decimal (whole number) of the 8 positions desired for an application, beginning with Step 0 (L200) and continuing with each step until Step 7 (L214). For example, enter 2 into this parameter if you would like a commanded position of 2.77.

L201, L203, L205, L207, L209, L211, L213 and L215 [Step Units F x] are the number value to the right of the decimal (the portion less than 1) of the 8 positions desired for an application, beginning with Step 0 (L201) and continuing with each step until Step 7 (L215). For example, enter 0.77 into this parameter if you would like a commanded position of 2.77.

A410...A417 [Preset Freq x] are the parameters that define the maximum frequency the drive will run at during the corresponding step. For example, if [Preset Freq 2] is set to 40 Hz, the drive will accelerate to 40 Hz maximum when moving to Position 2.

Frequency Source	Step Source	Position Source
A410 [Preset Freq 0]	L180 [Stp Logic 0]	L200 [Step Units 0]
A411 [Preset Freq 1]	L181 [Stp Logic 1]	L202 [Step Units 1]
A412 [Preset Freq 2]	L182 [Stp Logic 2]	L204 [Step Units 2]
A413 [Preset Freq 3]	L183 [Stp Logic 3]	L206 [Step Units 3]
A414 [Preset Freq 4]	L184 [Stp Logic 4]	L208 [Step Units 4]
A415 [Preset Freq 5]	L185 [Stp Logic 5]	L210 [Step Units 5]
A416 [Preset Freq 6]	L186 [Stp Logic 6]	L212 [Step Units 6]
A417 [Preset Freq 7]	L187 [Stp Logic 7]	L214 [Step Units 7]

IMPORTANT The default value for A410 [Preset Freq 0] is 0.00 Hz. This value needs to be changed or the drive will not be able to move during Step 0.

L190...L197 [Stp Logic Time x] are the parameters that define the time the drive will remain in each corresponding step if that step is time-based. For example, if L192 [Stp Logic Time 2] is set to 5.0 seconds and that step is time-based, the drive will remain in Step 2 for 5.0 seconds. Note that this is the total time in that step, not the time at that position. Therefore, it will include the time needed to accelerate, run, and decelerate to that position.

L180...L187 [Stp Logic x] are the parameters that allow additional flexibility and control various aspects of each step when a positioning mode is selected that utilizes the Step Logic functions. Note that in Positioning mode these parameters have a different function than when used for normal velocity Step Logic. Each of the 4 digits controls one aspect of the each position step. The following is a listing of the available settings for each digit:

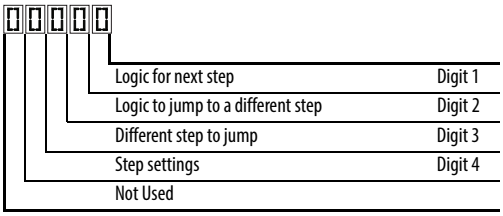

Velocity Control Settings (Digit 4)

Required Setting	Accel/Decel Param. Used	StepLogic Output State	Commanded Direction
0	Accel/Decel 1	Off	FWD
1	Accel/Decel 1	Off	REV
2	Accel/Decel 1	Off	No Output
3	Accel/Decel 1	On	FWD
4	Accel/Decel 1	On	REV
5	Accel/Decel 1	On	No Output
6	Accel/Decel 2	Off	FWD
7	Accel/Decel 2	Off	REV
8	Accel/Decel 2	Off	No Output
9	Accel/Decel 2	On	FWD
A	Accel/Decel 2	On	REV
b	Accel/Decel 2	On	No Output

Positioning Settings (Digit 4)

Required Setting	Accel/Decel Param. Used	StepLogic Output State	Direction From Home	Type of Command
0	Accel/Decel 1	Off	FWD	Absolute
1	Accel/Decel 1	Off	FWD	Incremental
2	Accel/Decel 1	Off	REV	Absolute
3	Accel/Decel 1	Off	REV	Incremental
4	Accel/Decel 1	On	FWD	Absolute
5	Accel/Decel 1	On	FWD	Incremental
6	Accel/Decel 1	On	REV	Absolute
7	Accel/Decel 1	On	REV	Incremental
8	Accel/Decel 2	Off	FWD	Absolute
9	Accel/Decel 2	Off	FWD	Incremental
A	Accel/Decel 2	Off	REV	Absolute
b	Accel/Decel 2	Off	REV	Incremental
C	Accel/Decel 2	On	FWD	Absolute
d	Accel/Decel 2	On	FWD	Incremental
E	Accel/Decel 2	On	REV	Absolute
F	Accel/Decel 2	On	REV	Incremental

Settings (Digit 3)

Setting	Description
0	Jump to Step 0
1	Jump to Step 1
2	Jump to Step 2
3	Jump to Step 3
4	Jump to Step 4
5	Jump to Step 5
6	Jump to Step 6
7	Jump to Step 7
8	End Program (Normal Stop)
9	End Program (Coast to Stop)
A	End Program and Fault (F2)

Settings (Digit 2 and 1)

Setting	Description
0	Skip Step (Jump Immediately)
1	Step Based on [Stp Logic Time x]
2	Step if “Logic In 1” is Active
3	Step if “Logic In 2” is Active
4	Step if “Logic In 1” is Not Active
5	Step if “Logic In 2” is Not Active
6	Step if either “Logic In 1” or “Logic In 2” is Active
7	Step if both “Logic In 1” and “Logic In 2” are Active
8	Step if neither “Logic In 1” nor “Logic In 2” is Active
9	Step if “Logic In 1” is Active and “Logic In 2” is Not Active
A	Step if “Logic In 2” is Active and “Logic In 1” is Not Active
b	Step after [Stp Logic Time x] and “Logic In 1” is Active
C	Step after [Stp Logic Time x] and “Logic In 2” is Active
d	Step after [Stp Logic Time x] and “Logic In 1” is Not Active
E	Step after [Stp Logic Time x] and “Logic In 2” is Not Active
F	Do Not Step/Ignore Digit 2 Settings

TIP Use the Wizard in Connected Components Workbench to simplify setup instead of manually configuring the parameters.

Note: Incremental move commands will cause the drive to move the amount specified based on the current position. Absolute commands are always with reference to “Home”.

A565 [Pos Reg Filter] provides a low pass filter at the input of the position regulator.

A566 [Pos Reg Gain] is a single adjustment for increasing or decreasing the responsiveness of the position regulator. For faster response, the filter should be reduced and/or the gain should be increased. For smoother response with less overshoot, the filter should be increased and/or the gain should be reduced. In general, the gain will have a larger effect on most systems than the filter.

Homing Routine

This drive supports incremental encoders only. Therefore, when the drive powers up it will reset the current position to zero. If this is known to be correct the position routine can be started without further adjustment. However, in most applications the drive will need to be "homed" after each power-up and prior to starting the position routine.

This can be accomplished in one of the following two ways:

1. Manual Homing–Program the following drive parameters:

   t062, t063, t065...t068 [DigIn TermBlk xx] = 37 "Pos Redefine"

   Program one of the digital inputs to 37 "Pos Redefine". Then, move the system into the home position with a run command, a jog command, or by manually moving the system into the home position. Then, toggle the "Pos Redefine" input. This will set the drive to "Home" at its current position and d388 [Units Traveled H] and d389 [Units Traveled L] are set to zero. Alternately, the "Pos Redefine" bit in A560 [Enh Control Word] can be toggled instead of utilizing a digital input.

   IMPORTANT The "Pos Redefine" input or bit must be returned to inactive before starting the position routine. Otherwise the drive will continuously read a position of "0" (home) and the position routine will not function correctly.

2. Automatic Homing to Limit Switch–Program the following drive parameters:

   t062, t063, t065...t068 [DigIn TermBlk xx] = 35 "Find Home"
   Program one of the digital inputs to 35 "Find Home".

   t062, t063, t065...t068 [DigIn TermBlk xx] = 34 "Home Limit"
   Program one of the digital inputs to 34 "Home Limit". Normally, the "Home Limit" input would be wired to a proximity switch or photo-eye and will indicate the system is in the home position.

   A562 [Find Home Freq] sets the frequency the drive will use while it is moving to the home position during the automatic homing routine.

   A563 [Find Home Dir] sets the direction the drive will use while it is moving to the home position during the automatic homing routine.

To begin the automatic homing routine, activate the "Find Home" input and then initiate a valid start command. The drive will then ramp to the speed set in A562 [Find Home Freq] and in the direction set in A563 [Find Home Dir] until the digital input defined as "Home Limit" is activated. If the drive passes this point too quickly it will then reverse direction at 1/10th A562 [Find Home Freq] to the point where the Home Limit switch reactivates. Approximately one second after the routine finds home the drive will stop. Alternately, the "Find Home Freq" and/or "Home Limit" bits in A560 [Enh Control Word] can be activated instead of utilizing a digital input. The inputs or bits should be returned to inactive after the routine is complete.

IMPORTANT After the position is reached the drive will stop. If the Find Home is removed before the homing is complete, the drive will begin running the position routine without the proper home. In this case Home will not be reset and the position will be in relation to the power up position.

Encoder and Position Feedback

d376 [Speed Feedback] indicates the measured speed feedback or the calculated speed feedback when no feedback device is selected. Parameter d376 [Speed Feedback] is the number value to the left of the decimal (whole number) and d377 [Speed Feedback F] is the value to the right of the decimal (the portion less than 1).

d378 [Encoder Speed] indicates the measured speed of the feedback device. This is useful if the encoder is not used for motor speed control. However, the encoder must be used for some purpose in order for d378 [Encoder Speed] to indicate a value. Parameter d378 [Encoder Speed] is the number value to the left of the decimal (whole number) and d379 [Encoder Speed F] is the number to the right of the decimal (the portion less than 1).

d388, d389 [Units Traveled x] indicate the current position of the system in terms of units away from Home. Parameter d388 [Units Traveled H] is the number value to the left of the decimal (whole number) and d389 [Units Traveled L] is the number to the right of the decimal (the portion less than 1).

d387 [Position Status] indicates the status of the positioning functions. The indication bits are:

Bit 0 "Dir Positive" indicates the current direction the drive has moved from Home.

Bit 1 "At Position" indicates whether the drive is at its commanded position. If the drive is within A564 [Encoder Pos Tol] of the commanded position, this bit will be active.

Bit 2 "At Home" indicates whether the drive is at Home. If the drive is within A564 [Encoder Pos Tol] of "Home", this bit will be active.

Bit 3 "Drive Homed" indicates whether the drive has been homed since power-up. This bit will be active once the drive has been homed either manually or automatically. It will remain active until the next power down.

Use Over Communications

If 8 steps are not adequate for the application or if dynamic program changes are required, many of the positioning functions can be controlled through an active communication network. The following parameters will allow this control.

C121 [Comm Write Mode]
Repeated writes to parameters over a communication network can cause damage to the drive EEPROM. This parameter allows the drive to accept parameter changes without writing to the EEPROM.

IMPORTANT Parameter values set prior to setting 1 "RAM only" are saved in RAM.

C122 [Cmd Stat Select]
Selects velocity-specific or position/fibers-specific Command and Status Word bit definitions for use over a communication network.

A560 [Enh Control Word]
This parameter allows many of the positioning functions to be completed through parameter control using an explicit message. This allows the operation over communications instead of with hardware inputs. The bits have the same functions as the digital input options of the same name. Options relating to positioning are:

Bit 0 "Home Limit" indicates the drive is at the home position.

Bit 1 "Find Home" causes the drive to find home at the next start command. Deactivate this bit after completing the homing routine.

Bit 2 "Hold Step" overrides other inputs and causes the drive to remain at its current step (running at zero speed once it reaches its position) until released.

Bit 3 "Pos Redefine" resets the home position to the current position of the machine. Deactivate this bit after completing the homing routine.

Bit 4 "Sync Enable" holds the existing frequency when A571 [Sync Time] is set to enable speed synchronization. When this bit is deactivated the drive will accelerate to the new commanded frequency based on A571 [Sync Time].

Bit 5 "Traverse Dis" disables the traverse function when this bit is active.

Bit 6 "Logic In 1" provides an identical function and is logically ORed with setting 24 "Logic In 1" for t062, t063, t065...t068 [DigIn TermBlk xx]. It can be used to move through the Step Logic functions (speed or position) using comms control without requiring actual digital input transitions.

Bit 7 "Logic In 2" provides an identical function and is logically ORed with setting 25 "Logic In 2" for t062, t063, t065...t068 [DigIn TermBlk xx]. It can be used to move through the Step Logic functions (speed or position) using comms control without requiring actual digital input transitions.

L200...L214 [Step Units x]
All of the position steps can be written to while the drive is running. The changes will take place at the next move. For example, if step 0 is over-written while the drive is moving to step 0, the drive will move to the previous commanded position at step 0. The next time the drive is commanded to return to step 0 it will proceed to the new position. One possible use of this capability is when an application requires full control of the movement by a controller external to the drive. The Step Logic program might be written to jump from step 0 back to step 0 when Input 1 is active. The controller could write any desired position to step 0 and then toggle the input 1 bit of A560 [Enh Control Word] to cause the drive to move to the new position. This allows almost unlimited flexibility and can be used with absolute or incremental moves.

Setup Notes

The RA computer tool (Connected Components Workbench) can make setup of the positioning functions much easier. Refer to the latest versions for additional tools or wizards which can aid in the setup.

PID Set Up

PID Loop

The PowerFlex 520-series drive features built-in PID (proportional, integral, derivative) control loops. The PID loop is used to maintain a process feedback (such as pressure, flow or tension) at a desired set point. The PID loop works by subtracting the PID feedback from a reference and generating an error value. The PID loop reacts to the error, based on the PID Gains, and outputs a frequency to try to reduce the error value to 0.

To enable the PID loop, P047, P049 or P051 [Speed Referencex] must be set to 11 "PID1 Output" or 12 "PID2 Output", and the corresponding speed reference activated.

IMPORTANT PowerFlex 523 has one PID control loop.

PowerFlex 525 has two PID control loops, of which only one can be in use at any time.

Exclusive Control and Trim Control are two basic configurations where the PID loop may be used.

Exclusive Control

In Exclusive Control, the Speed Reference becomes 0, and the PID Output becomes the entire Freq Command. Exclusive Control is used when A458 or A470 [PID x Trim Sel] is set to option 0. This configuration does not require a master reference, only a desired set point, such as a flow rate for a pump.

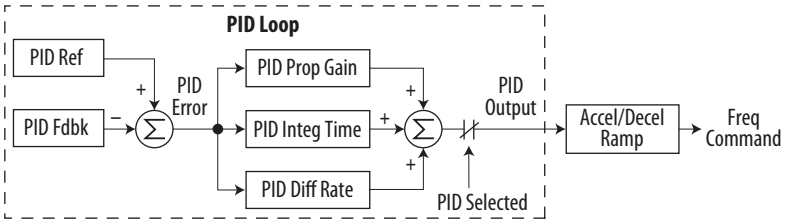

Example

- In a pumping application, the PID Reference equals the Desired System Pressure set point.
- The Pressure Transducer signal provides PID Feedback to the drive. Fluctuations in actual system pressure, due to changes in flow, result in a PID Error value.
- The drive output frequency increases or decreases to vary motor shaft speed to correct for the PID Error value.

- The Desired System Pressure set point is maintained as valves in the system are opened and closed causing changes in flow.
- When the PID Control Loop is disabled, the Commanded Speed is the Ramped Speed Reference.

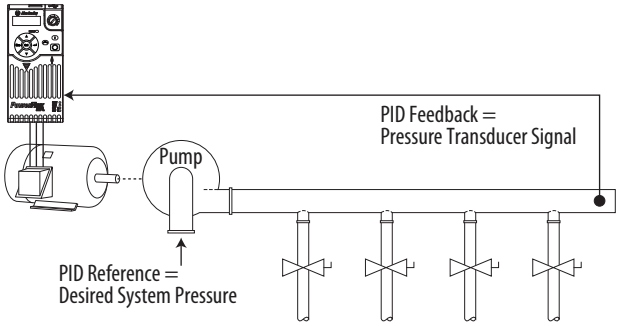

Trim Control

In Trim Control, the PID Output is added to the Speed Reference. In Trim mode, the output of the PID loop bypasses the accel/decel ramp as shown. Trim Control is used when A458 or A470 [PID x Trim Sel] is set to any option other than 0.

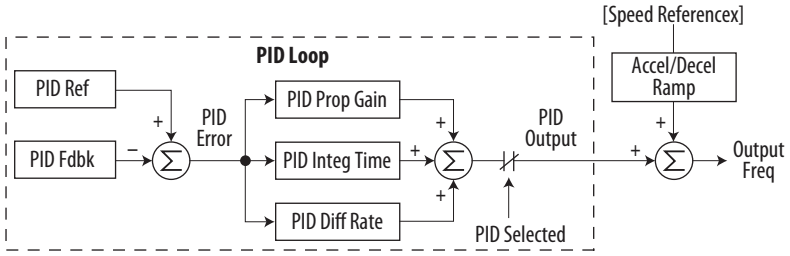

Example

- In a winder application, the PID Reference equals the Equilibrium set point.
- The Dancer Pot signal provides PID Feedback to the drive. Fluctuations in tension result in a PID Error value.
- The Master Speed Reference sets the wind/unwind speed.

- As tension increases or decreases during winding, the Speed Reference is trimmed to compensate. Tension is maintained near the Equilibrium set point.

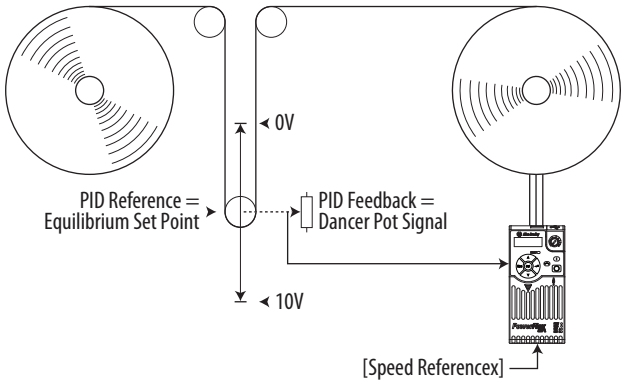

PID Reference and Feedback

PID mode is enabled by setting P047, P049 or P051 [Speed Referencex] to 11 "PID1 Output" or 12 "PID2 Output", and activating the corresponding speed reference.

IMPORTANT PowerFlex 523 has one PID control loop.

PowerFlex 525 has two PID control loops, of which only one can be in use at any time.

If A459 or A471 [PID x Ref Sel] is not set to 0 "PID Setpoint", PID can still be disabled by select programmable digital input options (parameters t062, t063, t065...t068 [DigIn TermBlk xx]) such as "Purge".

A459, A471 [PID x Ref Sel] Options

Options	Description
0 "PID Setpoint"	A464 or A476 [PID x Setpoint] will be used to set the value of the PID Reference.
1 "Drive Pot"	The drive potentiometer will be used to set the value of the PID Reference.
2 "Keypad Freq"	The drive keypad will be used to set the value of the PID Reference.
2 "Serial/DSI"	The reference word from the Serial/DSI communication network becomes the PID Reference.
4 "Network Opt"	The reference word from a communication network option becomes the PID Reference.
5 "0-10V Input"	Selects the 0-10V Input. Note that the PID will not function with a bipolar analog input. It will ignore any negative voltages and treat them like a zero.
6 "4-20mA Input"	Selects the 4-20 mA Input.
7 "Preset Freq"	A410...A425 [Preset Freq x] will be used as an input for the PID Reference.
8 "AnIgIn Multi"(1)	The product of the 0-10V and 4-20mA Inputs will be used as an input for the PID Reference.
9 "MOP Freq"	A427 [MOP Freq] will be used as an input for the PID Reference.
10 "Pulse Input"	Pulse train will be used as an input for the PID Reference.
11 "Step Logic"(1)	Step Logic will be used as an input for the PID Reference.
12 "Encoder"(1)	Encoder will be used as an input for the PID Reference.
13 "Ethernet/IP"(1)	The reference word from the Ethernet/IP communication network becomes the PID Reference.

(1) Setting is specific to PowerFlex 525 drives only.

A460 and A472 [PID x Fdback Sel] are used to select the source of the PID feedback.

A460, A472 [PID x Fdback Sel] Options

Options	Description
0 "0-10V Input"	Selects the 0-10V Input (default setting). Note that the PID will not function with a bipolar analog input. It will ignore any negative voltages and treat them like a zero.
1 "4-20mA Input"	Selects the 4-20 mA Input.
2 "Serial/DSI"	Serial/DSI will be used as an input for the PID Feedback.
3 "Network Opt"	The reference word from a communication network option becomes the PID Reference.
4 "Pulse Input"	Pulse train will be used as an input for the PID Feedback.
5 "Encoder"(1)	Encoder will be used as an input for the PID Feedback.
6 "Ethernet/IP"(1)	Ethernet/IP will be used as an input for the PID Feedback.

(1) Setting is specific to PowerFlex 525 drives only.

Analog PID Reference Signals

Parameters t091 [Anlg In 0-10V Lo] and t092 [Anlg In 0-10V Hi] are used to scale or invert an analog PID Reference or PID Feedback.

Scale Function

For a 0...5V signal, the following parameter settings are used so that a 0V signal = 0% PID Reference and a 5V signal = 100% PID Reference.

- t091 [Anlg In 0-10V Lo] = 0.0%
- t092 [Anlg In 0-10V Hi] = 50.0%
- A459 [PID 1 Ref Sel] = 5 "0-10V Input"

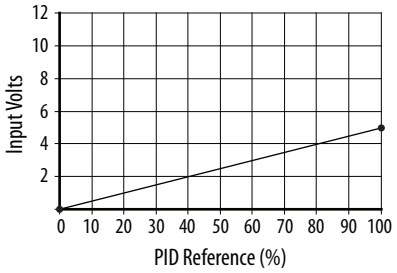

Invert Function

For a 4-20 mA signal, the following parameter settings are used so that a 20 mA signal = 0% PID Reference and a 4 mA signal = 100% PID Reference.

- t095 [Anlg In4-20mA Lo] = 100.0%
- t096 [Anlg In4-20mA Hi] = 0.0%

- A459 [PID 1 Ref Sel] = 6 “4-20mA Input”

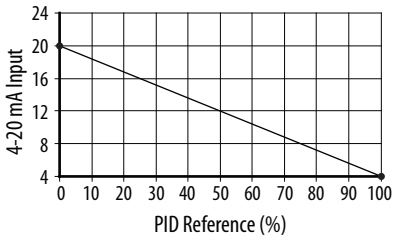

PID Deadband

Parameters A465 and A477 [PID x Deadband] are used to set a range, in percent, of the PID Reference that the drive will ignore.

Example

- A465 [PID 1 Deadband] = 5.0%
- The PID Reference is 25.0%
- The PID Regulator will not act on a PID Error that falls between 20.0 and 30.0%

PID Preload

The value set in A466 or A478 [PID x Preload], in Hz, will be pre-loaded into the integral component of the PID at any start or enable. This will cause the drive’s frequency command to initially jump to that preload frequency, and the PID loop starts regulating from there.

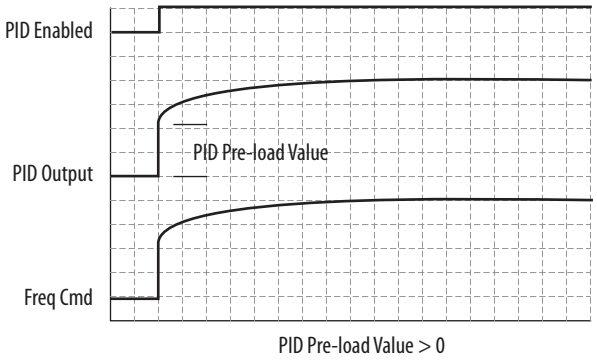

PID Limits

A456 and A468 [PID x Trim Hi] and A457 and A469 [PID x Trim Lo] are used to limit the PID output and are only used in trim mode. [PID x Trim Hi] sets the maximum frequency for the PID output in trim mode. [PID x Trim Lo] sets the reverse frequency limit for the PID output in trim mode. Note that when the

PID reaches the Hi or Lo limit, the PID regulator stops integrating so that windup does not occur.

PID Gains

The proportional, integral, and differential gains make up the PID regulator.

- A461 and A473 [PID x Prop Gain]
  The proportional gain (unitless) affects how the regulator reacts to the magnitude of the error. The proportional component of the PID regulator outputs a speed command proportional to the PID error. For example, a proportional gain of 1 would output 100% of max frequency when the PID error is 100% of the analog input range. A larger value for [PID x Prop Gain] makes the proportional component more responsive, and a smaller value makes it less responsive. Setting [PID x Prop Gain] to 0.00 disables the proportional component of the PID loop.
- A462 and A474 [PID x Integ Time]
  The integral gain (units of seconds) affects how the regulator reacts to error over time and is used to get rid of steady state error. For example, with an integral gain of 2 seconds, the output of the integral gain component would integrate up to 100% of max frequency when the PID error is 100% for 2 seconds. A larger value for [PID x Integ Time] makes the integral component less responsive, and a smaller value makes it more responsive. Setting [PID x Integ Time] to 0.0 disables the integral component of the PID loop.
- A463 and A475 [PID x Diff Rate]
  The Differential gain (units of 1/seconds) affects the rate of change of the PID output. The differential gain is multiplied by the difference between the previous error and current error. Thus, with a large error the D has a large effect and with a small error the D has less of an effect. This parameter is scaled so that when it is set to 1.00, the process response is 0.1% of P044 [Maximum Freq] when the process error is changing at 1% / second. A larger value for [PID x Diff Rate] makes the differential term have more of an effect and a small value makes it have less of an effect. In many applications, the D gain is not needed. Setting [PID x Diff Rate] to 0.00 (factory default) disables the differential component of the PID loop.

Guidelines for Adjusting the PID Gains

1. Adjust the proportional gain. During this step it may be desirable to disable the integral gain and differential gain by setting them to 0. After a step change in the PID Feedback:
   - If the response is too slow increase A461 or A473 [PID x Prop Gain].
   - If the response is too quick and/or unstable (see Unstable Response on page 233), decrease A461 or A473 [PID x Prop Gain].
   - Typically, A461 or A473 [PID x Prop Gain] is set to some value below the point where the PID begins to go unstable.

2. Adjust the integral gain (leave the proportional gain set as in Step 1). After a step change in the PID Feedback:
   - If the response is too slow (see Slow Response – Over Damped on page 233), or the PID Feedback does not become equal to the PID Reference, decrease A462 or A474 [PID x Integ Time].
   - If there is a lot of oscillation in the PID Feedback before settling out (see Oscillation – Under Damped on page 233), increase A462 or A474 [PID x Integ Time].
3. At this point, the differential gain may not be needed. However, if after determining the values for A461 or A473 [PID x Prop Gain] and A462 or A474 [PID x Integ Time]:
   - Response is still slow after a step change, increase A463 or A475 [PID x Diff Rate].
   - Response is still unstable, decrease A463 or A475 [PID x Diff Rate].

The following figures show some typical responses of the PID loop at different points during adjustment of the PID Gains.

Unstable Response

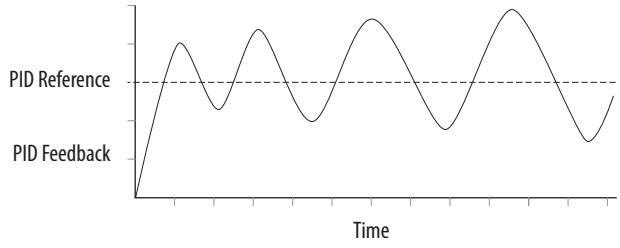

Slow Response – Over Damped

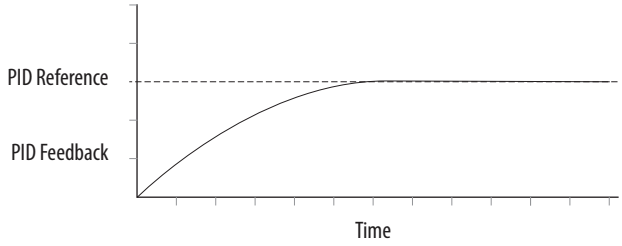

Oscillation – Under Damped

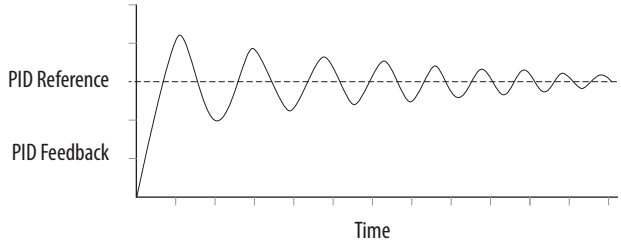

Good Response – Critically Damped

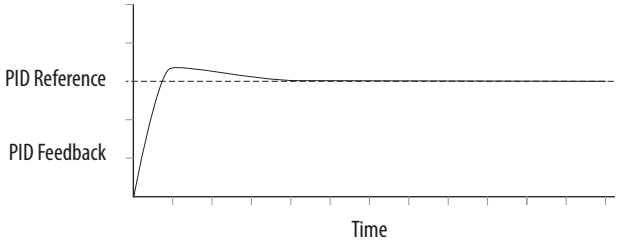

Safe-Torque-Off Function

The PowerFlex 525 Safe-Torque-Off function, when used with other safety components, helps provide protection according to EN ISO 13849 and EN62061 for safe-off and protection against restart. The PowerFlex 525 Safe-Torque-Off function is just one component in a safety control system. Components in the system must be chosen and applied appropriately to achieve the desired level of operator safeguarding.

For information on...	See page...
PowerFlex 525 Safe-Torque-Off Overview	235
EC Type Examination Certification	236
EMC Instructions	236
Using PowerFlex 525 Safe-Torque-Off	236
Enabling PowerFlex 525 Safe-Torque-Off	239
Wiring	239
Verify Operation	240
PowerFlex 525 Safe-Torque-Off Operation	239
Connection Examples	241
PowerFlex 525 Certification for Safe-Torque-Off	245

IMPORTANT The Safe-Torque-Off function covered in this chapter is specific to PowerFlex 525 drives only.

PowerFlex 525 Safe-Torque-Off Overview

The PowerFlex 525 Safe-Torque-Off function:

- Provides the Safe-Torque-Off (STO) function defined in EN 61800-5-2.
- Blocks gate-firing signals from reaching the Insulated Gate Bipolar Transistor (IGBT) output devices of the drive. This prevents the IGBTs from switching in the sequence necessary to generate torque in the motor.
- Can be used in combination with other safety devices to fulfill the requirements of a system “safe torque off” function which satisfies Category 3 / PL (d) according to EN ISO 13849-1 and SIL CL2 according to EN 62061, IEC 61508, and EN 61800-5-2.

IMPORTANT The function is suitable for performing mechanical work on the drive system or affected area of a machine only. It does not provide electrical safety.

ATTENTION: Electric Shock Hazard. Verify that all sources of AC and DC power are de-energized and locked out or tagged out in accordance with the requirements of ANSI/NFPA 70E, Part II.

To avoid an electric shock hazard, verify that the voltage on the bus capacitors has discharged before performing any work on the drive. Measure the DC bus voltage at the +DC and -DC terminals or test points (refer to your drive's User Manual for locations). The voltage must be zero.

In safe-off mode, hazardous voltages may still be present at the motor. To avoid an electric shock hazard, disconnect power to the motor and verify that the voltage is zero before performing any work on the motor.

EC Type Examination Certification

TÜV Rheinland has certified the PowerFlex 525 Safe-Torque-Off function compliant with the requirements for machines defined in Annex I of the EC Directive 2006/42/EC, and that it complies with the requirements of the relevant standards listed below:

- EN ISO 13849-1 Safety of machinery – Safety related parts of control systems – Part 1: General principles for design.
  (PowerFlex 525 STO achieves Category 3 / PL(d))
- EN 61800-5-2 Adjustable speed electrical power drive systems – Part 5-2 Safety requirements – Functional.
  (PowerFlex 525 STO achieves SIL CL 2)
- EN 62061 Safety of machinery – Functional safety of safety-related electrical, electronic and programmable electronic control systems.
- IEC 61508 Part 1-7 Functional safety of electrical/electronic/programmable electronic safety-related systems – Parts 1-7.

TÜV also certifies that the PowerFlex 525 STO may be used in applications up to Category 3/ PL(d) according to EN ISO 13849-1 and SIL 2 according to EN 62061 / EN 61800-5-2 / IEC 61508.

The TÜV Rheinland certificate may be found at:
www.rockwellautomation.com/products/certification/.

EMC Instructions

PowerFlex 525 Safe-Torque-Off function requires CE Conformity as described on page 52.

Using PowerFlex 525 Safe-Torque-Off

The PowerFlex 525 Safe-Torque-Off function is intended to be part of the safety related control system of a machine. Before use, a risk assessment should be performed that compares the PowerFlex 525 Safe-Torque-Off function specifications and all foreseeable operational and environmental characteristics of the machine to which it is to be fitted.

A safety analysis of the machine section controlled by the drive is required to determine how often the safety function should be tested for proper operation during the life of the machine.

ATTENTION: The following information is merely a guide for proper installation. Rockwell Automation cannot assume responsibility for the compliance or the noncompliance to any code, national, local or otherwise for the proper installation of this equipment. A hazard of personal injury and/or equipment damage exists if codes are ignored during installation.

ATTENTION: In safe-off mode, hazardous voltages may still be present at the motor. To avoid an electric shock hazard, disconnect power to the motor and verify that the voltage is zero before performing any work on the motor.

ATTENTION: In the event of the failure of two output IGBTs in the drive, when the PowerFlex 525 Safe-Torque-Off has controlled the drive outputs to the off state, the drive may provide energy for up to 180° of rotation in a 2-pole motor before torque production in the motor ceases.

Safety Concept

The PowerFlex 525 Safe-Torque-Off function is suitable for use in safety applications up to and including Category 3 / PL(d) according to EN ISO 13849-1 and SIL 2 according to EN 62061 / EN 61800-5-2 / IEC 61508.

In addition, the PowerFlex 525 STO may be used together with other components in a safety application to achieve an overall Category 3 / PL(e) according to EN ISO 13849-1 and SIL 3 according to EN 62061 and IEC 61508. This is illustrated in Example 3 in this appendix.

Safety requirements are based on the standards current at the time of certification.

The PowerFlex 525 Safe-Torque-Off function is intended for use in safety-related applications where the de-energized state is considered to be the safe state. All of the examples in this manual are based on achieving de-energization as the safe state for typical Machine Safety and Emergency Shutdown (ESD) systems.

Important Safety Considerations

The system user is responsible for:

- the set-up, safety rating, and validation of any sensors or actuators connected to the system.
- completing a system-level risk assessment and reassessing the system any time a change is made.
- certification of the system to the desired safety performance level.
- project management and proof testing.
- programming the application software and the safety option configurations in accordance with the information in this manual.

- access control to the system, including password handling.
- analyzing all configuration settings and choosing the proper setting to achieve the required safety rating.

IMPORTANT When applying Functional Safety, restrict access to qualified, authorized personnel who are trained and experienced.

ATTENTION: When designing your system, consider how personnel will exit the machine if the door locks while they are in the machine. Additional safeguarding devices may be required for your specific application.

Functional Proof Test

The PFD and PFH values provided in the table below are contingent upon the Proof Test Interval (PTI). Before the end of the PTI specified in the table below, a proof test of the STO safety function must be performed in order for the specified PFD and PFH values to remain valid.

PFD and PFH Data

PFD and PFH calculations are based on the equations from Part 6 of EN 61508.

This table provides data for a 20-year proof test interval and demonstrates the worst-case effect of various configuration changes on the data.

PFD and PFH for 20-year Proof Test Interval

Attribute	Value
PFD	6.62E-05 (MTTF = 3593 years)
PFH_D	8.13E-10
SFF	83%
DC	62.5%
CAT	3
HFT	1 (1oo2)
PTI	20 YEARS
Hardware Type	Type A

Safety Reaction Time

The safety reaction time is the amount of time from a safety-related event as input to the system until the system is in the Safe State.

The safety reaction time from an input signal condition that triggers a safe stop, to the initiation of safe-torque-off, is 100 ms (maximum).

Enabling PowerFlex 525 Safe-Torque-Off

1. Remove all power to the drive.

> **ATTENTION:** To avoid an electric shock hazard, verify that the voltage on the bus capacitors has discharged before performing any work on the drive. Measure the DC bus voltage at the +DC and -DC terminals or test points (refer to your drive's user manual for the location of the terminals). The voltage must be zero.

2. Loosen the screw of terminals Safety 1, Safety 2 and Safety +24V (S1, S2, S+) on the control I/O terminal block.
3. Remove the protective jumper.

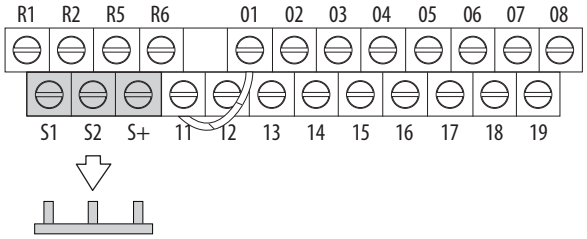

4. Safe-Torque-Off function is now enabled and the terminals are ready to function as safety inputs.

Wiring

Important points to remember about wiring:

- Always use copper wire.
- Wire with an insulation rating of 600V or greater is recommended.
- Control wires should be separated from power wires by at least 0.3 m (1 ft).

Recommended Wire

Type	Wire Type(1)	Description	Min. Insulation Rating
Shielded	Multi-conductor shielded cable such as Belden 8770 (or equiv.)	0.750 mm^2 (18 AWG), 3 conductor, shielded.	300V, 60 °C (140 °F)

(1) Recommendations are for 50 °C ambient temperature.
75 °C wire must be used for 60 °C ambient temperature.
90 °C wire must be used for 70 °C ambient temperature.

See I/O Wiring on page 36 for wiring recommendations and Control I/O Terminal Designations on page 43 for terminal descriptions.

If Safety Inputs S1 and S2 are powered by an external +24V source, apply it only in SELV system, PELV system or low voltage Class 2 circuit.

PowerFlex 525 Safe-Torque-Off Operation

The PowerFlex 525 Safe-Torque-Off function disables the drive's output IGBT's by breaking the link with the drive microcontroller. When used in combination with a safety input device, the system satisfies the requirements of EN ISO 13849 and EN62061 for safe-torque-off and helps protect against restart.

Under normal drive operation, both safety inputs (Safety 1 and Safety 2) are energized, and the drive is able to run. If either input is de-energized, the gate control circuit becomes disabled. To meet EN ISO 13849 operation, both safety channels must be de-energized. Refer to the following examples for more information.

IMPORTANT By itself, the Safe-Torque-Off function initiates a coast to stop action. Additional protective measures will need to be applied when an application requires a change to the stop action.

Verify Operation

Test the safety function for proper operation after the initial setup of the PowerFlex 525 Safe-Torque-Off function. Retest the safety function at the intervals determined by the safety analysis described on page 236.

Verify that both safety channels are functioning according to the table below.

Channel Operation and Verification

Safety Function Status	**Drive In Safe State**	**Drive In Safe State**	**Drive In Safe State**	**Drive Able To Run**
Drive Status	**Configured by t105 [Safety Open En]**	**Fault F111 (Safety Hardware)**	**Fault F111 (Safety Hardware)**	**Ready/Run**
		Safety Channel Operation		
Safety Input S1	No Power Applied	Power Applied	No Power Applied	Power Applied
Safety Input S2	No Power Applied	No Power Applied	Power Applied	Power Applied

IMPORTANT If an external fault is present on the wiring or circuitry controlling the Safety 1 or Safety 2 inputs for a period of time, the Safe-Torque-Off function may not detect this condition. When the external fault condition is removed the Safe-Torque-Off function will allow an enable condition. Fault in the external wiring shall either be detected by external logic, or excluded (wiring must be protected by cable ducting or armoring), according to EN ISO 13849-2.

Discrepancy Time of the Safety Inputs

For example, if S1 is disabled and S2 did not follow after the discrepancy time, fault F111 “Safety Hardware” will occur. However, if S1 is disable and S2 follows before the discrepancy time, fault F059 “Safety Open” will occur.

The discrepancy time is one second for PowerFlex 525 FRN 5.xxx and later. The discrepancy time is 10 milliseconds for PowerFlex 525 FRN 4.xxx and earlier.

Connection Examples

Example 1 – Safe-Torque-Off Connection with Coast-to-Stop Action, SIL 2/PL d

Stop Category 0 – Coast

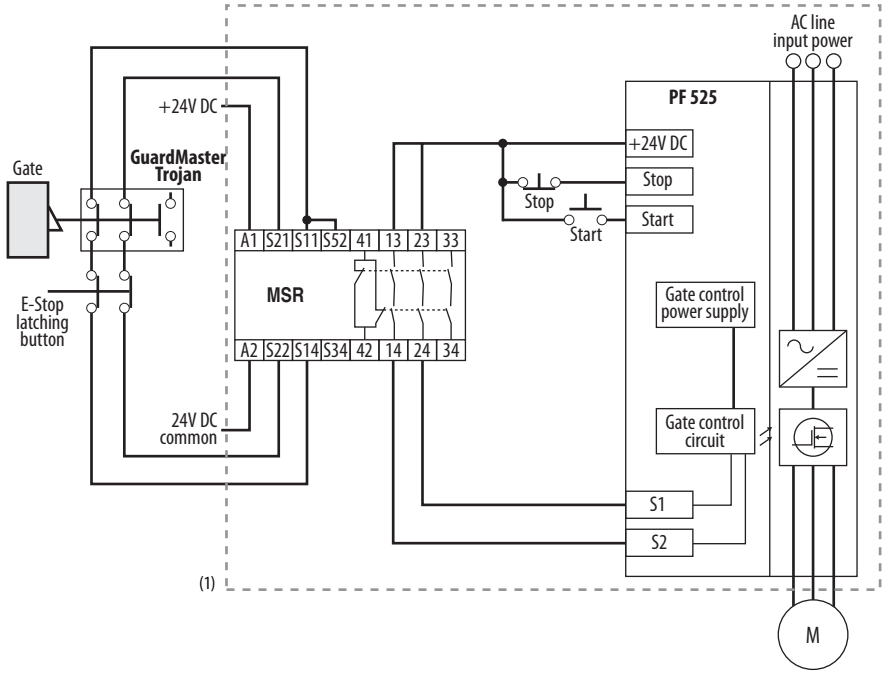

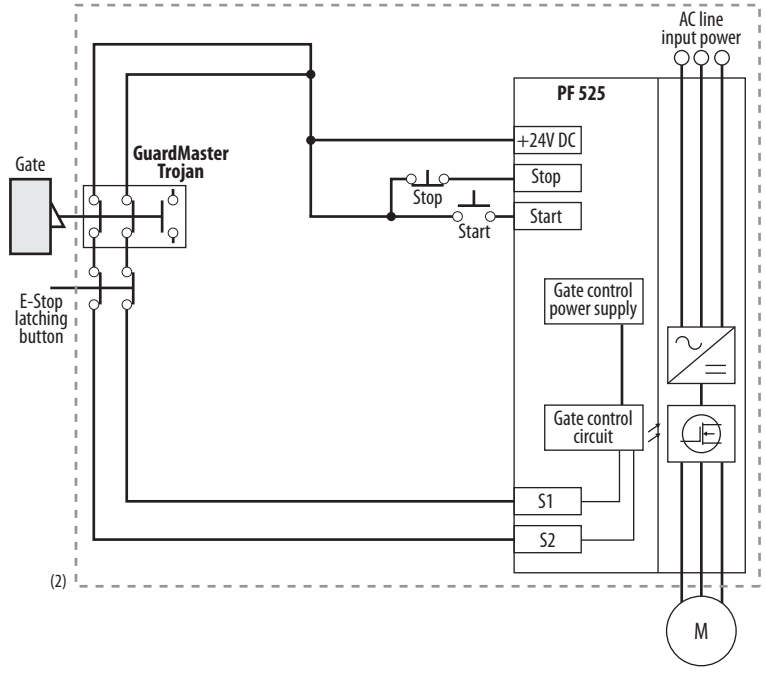

(1) Enclosure Recommended. Note: External wiring failure modes must be considered as described in EN ISO 13849-2. Enclosure or other measure to exclude these failure modes should be used.

(2) In some situations, a safety relay is not required if both the switch and PowerFlex 525 are installed in the same enclosure.

Stop Category 0 – Coast with Two PowerFlex 525 Drives

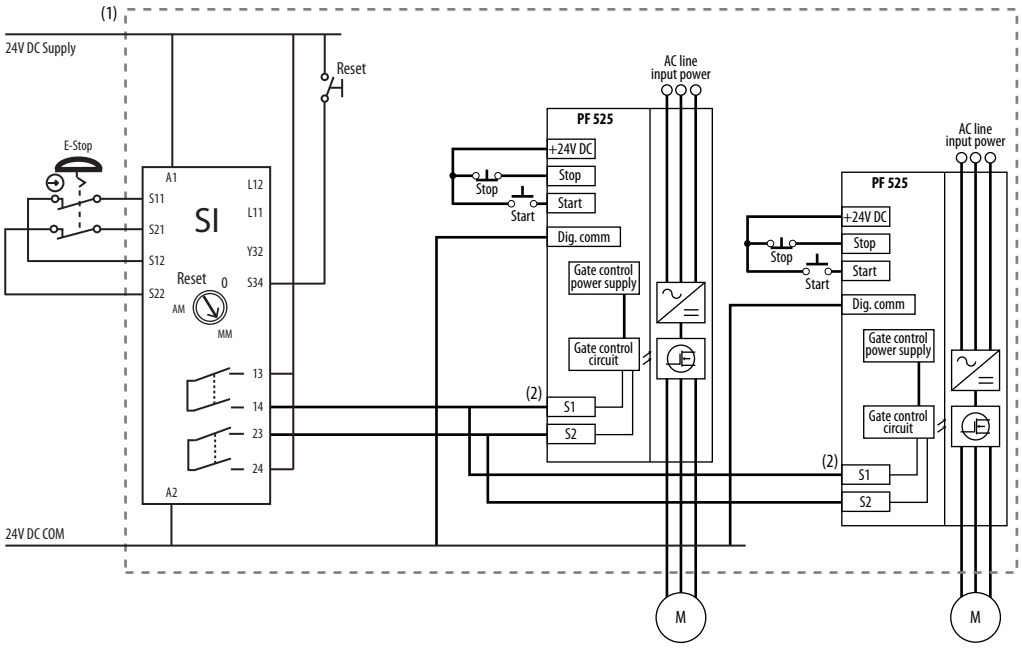

(1) Enclosure Recommended. Note: External wiring failure modes must be considered as described in EN ISO 13849-2. Enclosure or other measure to exclude these failure modes should be used.
(2) Each safety input draws 6 mA from the supply.

Circuit Status

Circuit shown with guard door closed and system ready for normal drive operation.

Operating Principle

This is a dual channel system with monitoring of the Safe-Torque-Off circuit and drive. Opening the guard door will switch the input circuits (S13-S14 & S21-S22) to the Minotaur monitoring safety relay unit. The output circuits (13-14 & 23-24) will cause the Safe-Torque-Off Enable circuit to trip and the motor will coast to stop. To restart the drive, the Minotaur safety relay must first be reset followed by a valid start command to the drive.

Fault Detection

A single fault detected on the Minotaur safety input circuits will result in the lock-out of the system at the next operation and will not cause loss of the safety function.

A single fault detected on the PowerFlex 525 safety enable redundant inputs will result in the lock-out of the drive and will not cause loss of the safety function.

Example 2 – Safe-Torque-Off Connection with Controlled Stop Action, SIL 2/PL d

Stop Category 1 – Controlled

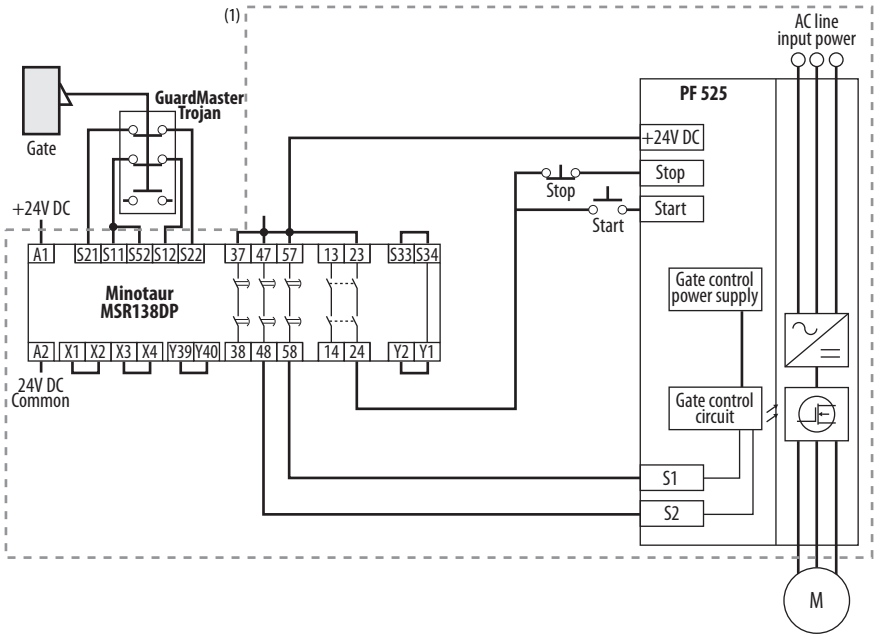

(1) Enclosure Recommended. External wiring failure modes must be considered as described in EN ISO 13849-2. Enclosure or other measure to exclude these failure modes should be used.

Circuit Status

Circuit shown with guard door closed and system ready for normal drive operation.

Operating Principle

This is a dual channel system with monitoring of the Safe-Torque-Off circuit and drive. Opening the guard door will switch the input circuits (S11-S12 & S21-S22) to the Minotaur monitoring safety relay unit. The output circuits (13-14) will issue a Stop command to the drive and cause a controlled deceleration. After the programmed delay, the timed output circuits (47-48 & 57-58) will cause the Safe-Torque-Off Enable circuit to trip. If the motor is rotating when the trip occurs, it will coast to stop. To restart the drive, the Minotaur safety relay must first be reset followed by a valid start command to the drive.

Fault Detection

A single fault detected on the Minotaur safety input circuits will result in the lock-out of the system at the next operation and will not cause loss of the safety function.

A single fault detected on the PowerFlex 525 safety enable redundant inputs will result in the lock-out of the drive and will not cause the loss of the safety function.

Example 3 – Safe-Torque-Off Connection with Coast-to-Stop Action Using External +24V supply, SIL 3/PL e

Stop Category 0 – Coast

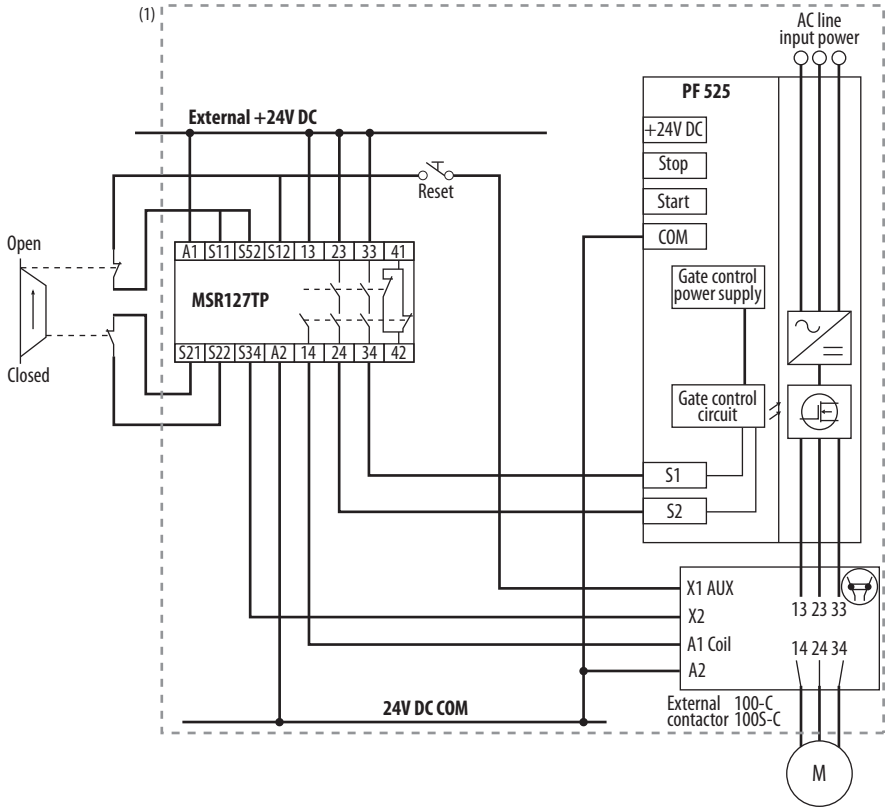

(1) Enclosure Recommended. External wiring failure modes must be considered as described in EN ISO 13849-2. Enclosure or other measure to exclude these failure modes should be used.

Circuit Status

Circuit shown with guard door closed and system ready for normal drive operation.

Operating Principle

This is a dual channel system with monitoring of the Safe-Torque-Off circuit and drive. Opening the guard door will switch the input circuits (S11-S12 & S21-S22) to the Minotaur monitoring safety relay unit. The output circuits (13-14 & 23-24 & 33-34) will cause the output contact and Safe-Torque-Off Enable circuit to trip and the motor will coast to stop. To restart the drive, the Minotaur safety relay must first be reset followed by a valid start command to the drive.

Fault Detection

A single fault detected on the Minotaur safety input circuits will result in the lock-out of the system at the next operation and will not cause loss of the safety function.

PowerFlex 525 Certification for Safe-Torque-Off

Certification information can be viewed at http://www.rockwellautomation.com/global/certification/

Notes:

EtherNet/IP

This section contains only basic information to setup an EtherNet/IP connection with your PowerFlex 520-series drive. For comprehensive information about EtherNet/IP (single and dual-port) and how to use it, see the following publications:

- PowerFlex 525 Embedded EtherNet/IP Adapter User Manual, publication 520COM-UM001.
- PowerFlex 25-COMM-E2P Dual-Port EtherNet/IP Adapter User Manual, publication 520COM-UM003.

ATTENTION: PowerFlex 523 drives support only the 25-COMM-E2P dual-port EtherNet/IP adapter. PowerFlex 525 drives support both the embedded EtherNet/IP adapter and the 25-COMM-E2P dual-port EtherNet/IP adapter.

It is recommended to use Allen-Bradley Ethernet RJ45 cables, shielded or unshielded (catalog number 1585J-M8xBJM-x), for connecting your PowerFlex 520-series drive to an EtherNet/IP network.

Establishing A Connection With EtherNet/IP

There are three methods for configuring the Ethernet IP address:

- **BootP Server** – Use BootP if you prefer to control the IP addresses of devices using a server. The IP address, subnet mask, and gateway addresses will then be provided by the BootP server.
- **Adapter Parameters** – Use adapter parameters when you want more flexibility in setting up the IP address, or need to communicate outside the control network using a gateway. The IP address, subnet mask, and gateway addresses will then come from the adapter parameters you set.
- **DHCP** (**Dynamic Host Configuration Protocol**) (only with PowerFlex 25-COMM-E2P adapter) – Use DHCP when you want additional flexibility and ease-of-use compared to BOOTP in configuring the IP address, subnet mask, and gateway address for the adapter using a DHCP server.

IMPORTANT If you are setting your network addresses manually using parameters, you must set the appropriate drive or 25-COMM-E2P adapter parameter value to 1 “Parameters”. See the respective EtherNet/IP adapter user manual for more information.

IMPORTANT Regardless of the method used to set the adapter IP address, each node on the EtherNet/IP network must have a unique IP address. To change an IP address, you must set the new value and then remove and reapply power to (or reset) the adapter.

Ground Connections for EtherNet/IP Networks

Connect terminal C1 to a clean ground when using a network with a star topology. It is acceptable to ground both C1 and C2 terminals.

PowerFlex 525 Embedded Ethernet/IP Adapter

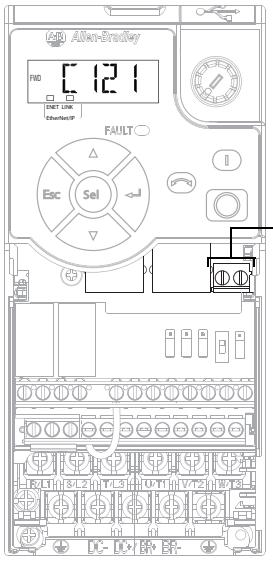

Terminal	Description
C1	This terminal is tied to the RJ-45 port shield. Tie this terminal to a clean ground in order to improve noise immunity when using external communication peripherals.
C2	This is the signal common for the communication signals.

Connect terminal CS1 or CS2 to a clean ground when using a network with a ring topology.

PowerFlex 25-COMM-E2P Dual-Port EtherNet/IP Adapter

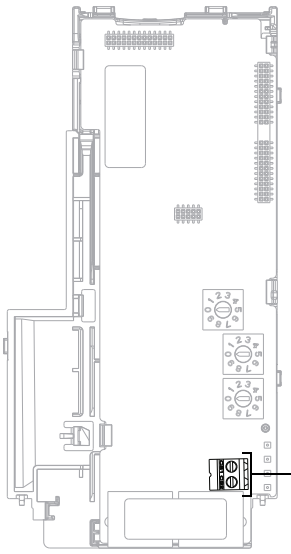

Terminal	Description
CS1/CS2	Provides a clean ground for the communication bus cable shields. CS1 or CS2 should be connected to a clean ground or PE ground on the drive.

Control Diagrams

This chapter contains various diagrams on the PowerFlex 520-series drive functions and behaviors.

Induction Motor Tuning Diagrams

[Speed Reg Sel] Diagrams For Motor Tuning

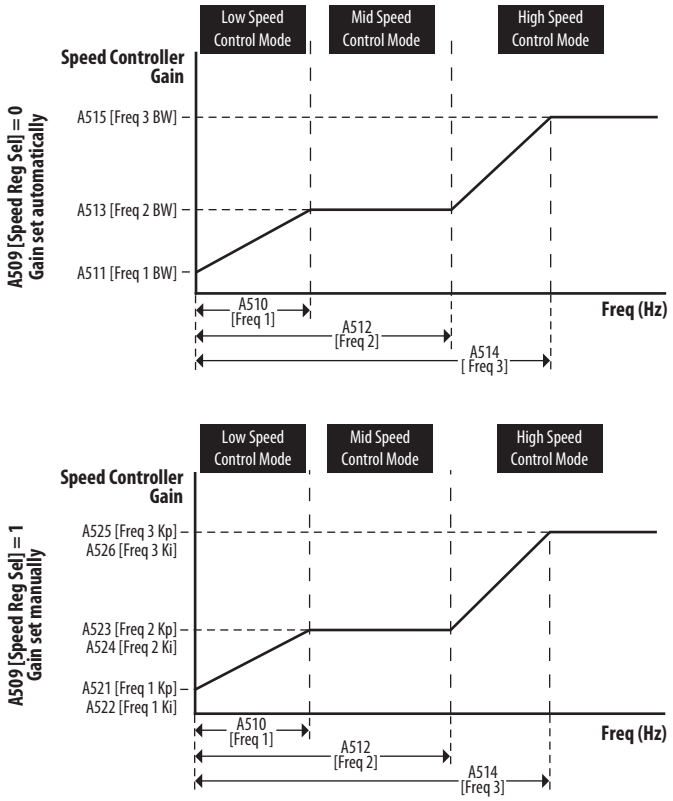

Adjusting Speed Control Parameters

These settings show how to adjust the speed control for motor tuning.

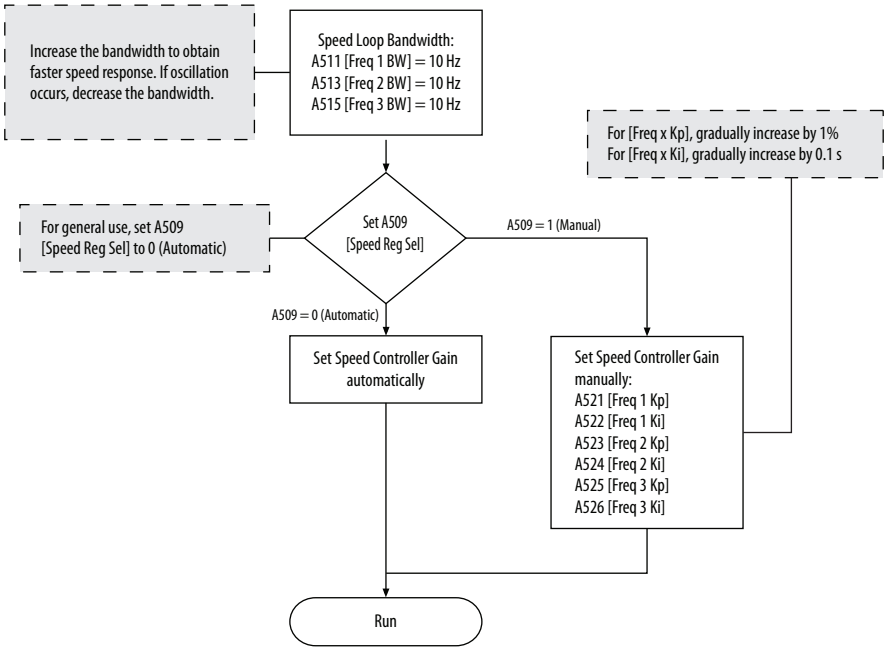

PowerFlex 525 PM Motor Configuration

This chapter contains instructions and diagrams on configuring the PowerFlex 525 drive for use with a PM motor.

For information on...	See page...
Download Files	252
Automatic Configuration Using Drive Startup Wizard	254
Manual Configuration Using Drive Keypad	261
Additional PM Motor Configuration	262
Optional Parameter Adjustments for Optimum Performance	266

ATTENTION: It is the responsibility of the startup engineer / end user to use proper safety precautions with any equipment used during this startup.

In no event will Rockwell Automation, Inc. be responsible or liable for indirect or consequential damages resulting from the use or application of this equipment. The examples and diagrams in this document are included solely for illustrative purposes. Because of the many variables and requirements associated with any particular installation, Rockwell Automation cannot assume responsibility or liability of actual use based on the examples and diagrams.

No patent liability is assumed by Rockwell Automation, Inc. with respect to the information, circuits, equipment. Or software described in this document. Rockwell Automation reserves the right to make changes to this document without prior notice. When using examples in this document the user recognizes that Rockwell Automation cannot be made liable for any damage or claims. Because there are many application-specific variables, users MUST ensure that products are correctly used and the appropriate architecture is deployed. Reproduction of the contents of this document, in whole or in part, without written permission of Rockwell Automation, Inc. is prohibited.

To use PM motor control, you need to install the PowerFlex 525 drive firmware revision 5.001 or later. If you wish to perform PM motor tuning by using the PowerFlex 525 Startup Wizard in Connected Components Workbench, you also need to install version 1.05 or later Add-on profile (AOP) and update to the latest drive database for Connected Components Workbench.

These files are available for download at the Rockwell Automation Product Compatibility and Download Center. For instructions, see Download Files on page 252.

Download Files

Follow these steps to download the files for your PowerFlex 525 drive.

1. Go to the Rockwell Automation Product Compatibility and Download Center at http://www.rockwellautomation.com/rockwellautomation/support/pcdc.page

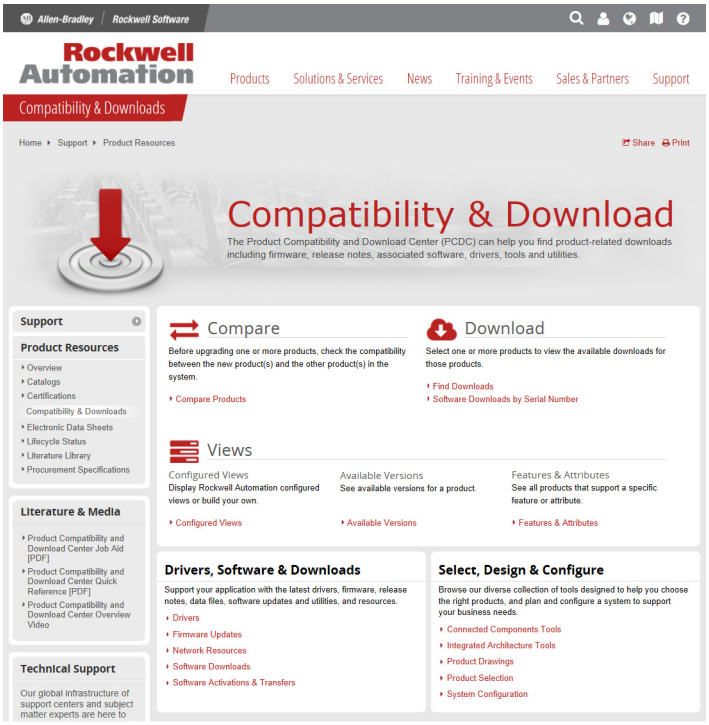

IMPORTANT You must sign in to the Rockwell Automation website before downloading a firmware revision.

2. Click the Find Downloads link.

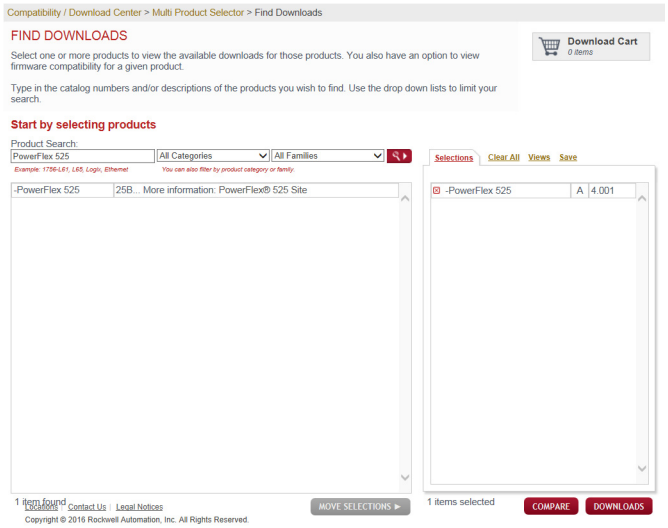

3. Enter “PowerFlex 525” into the Product Search field.
   The results appears in the box below.
4. Select the entry and the firmware revision, then click **Downloads**.

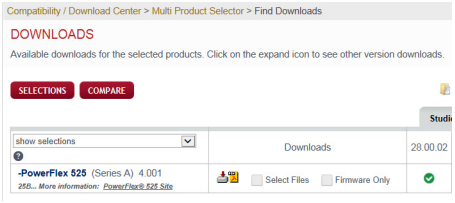

5. Click the Show Downloads icon, then click the links to download the firmware revision and AOP files to your computer.
6. Go back to step 2 and enter “AB Drives” into the Product Search field.
   The results appear in the box below.

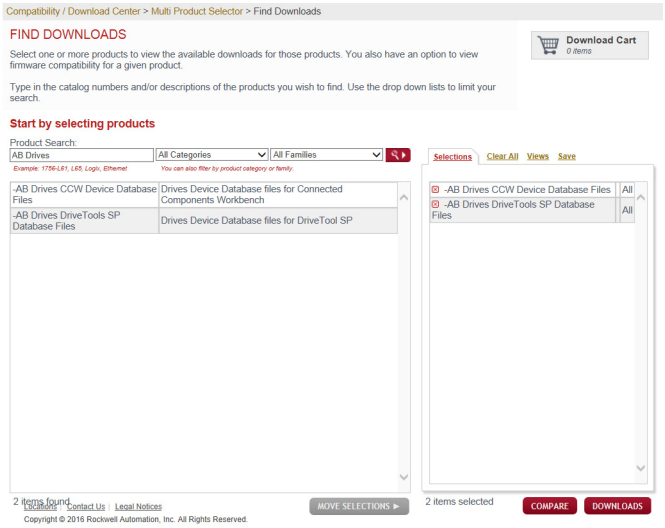

7. Select both entries, then click **Downloads**.

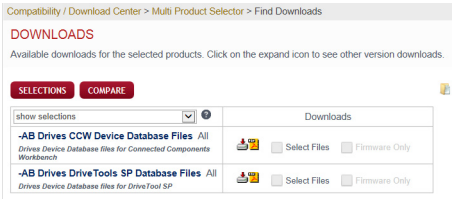

8. Click the Show Downloads icon, then click the links to download the database files to your computer.

Automatic Configuration Using Drive Startup Wizard

To use the PowerFlex 525 Startup Wizard in Connected Components Workbench to automatically configure the parameters, make sure you have installed the following:

- PowerFlex 525 drive firmware revision 5.001 or later.
- PowerFlex 525 drive Add-on Profile 1.05 or later.
- Latest drive database for Connected Components Workbench.

For instructions, see Download Files on page 252.

Alternatively, you can manually configure the parameters by using the drive keypad. For instructions, see Manual Configuration Using Drive Keypad on page 261.

1. From Connected Components Workbench software, click the Wizard Browser icon.

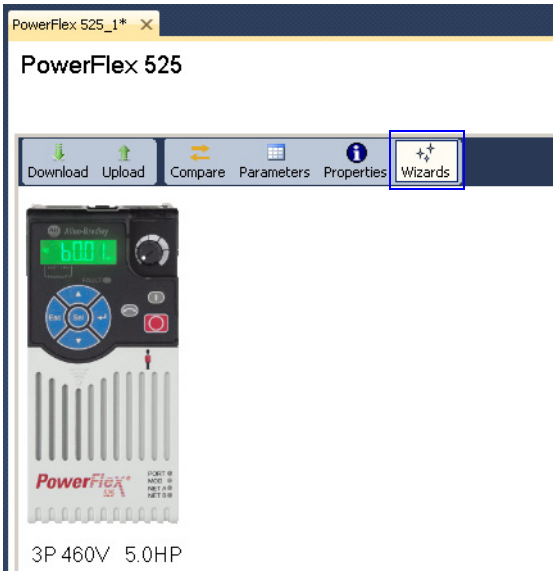

2. In the Available Wizards dialog box, click on PowerFlex 525 Startup Wizard, then click Select.

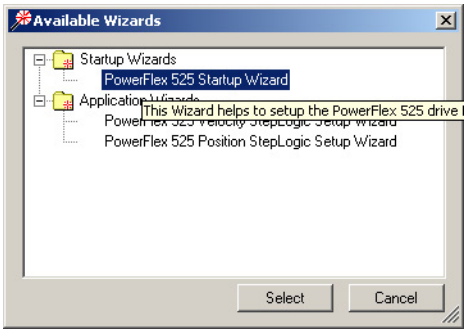

3. Before tuning the drive, it is recommended to reset all parameters to their default values. Select the option shown below.

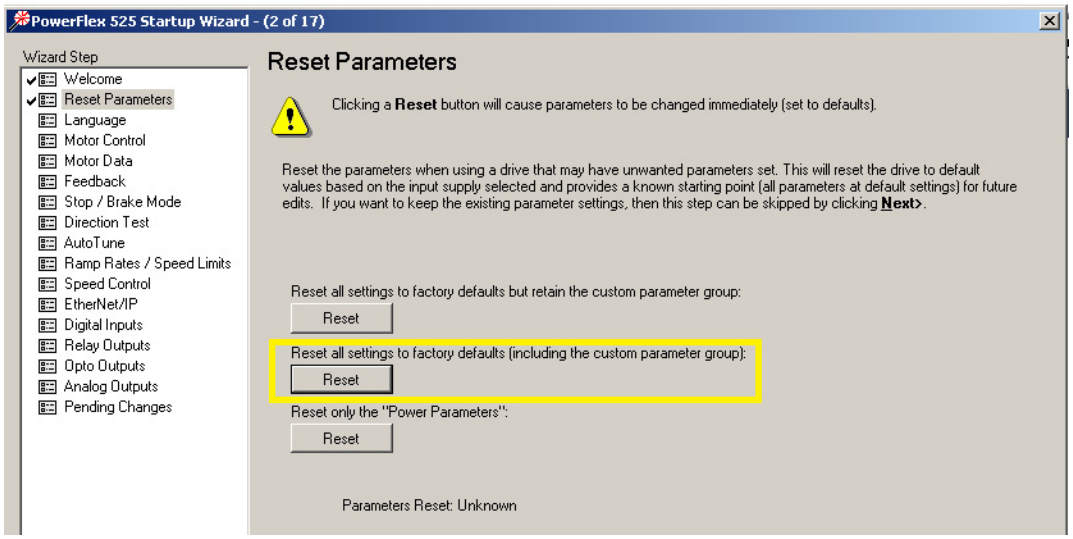

4. Complete each step in the Startup Wizard to configure the drive.

IMPORTANT	Follow the Startup Wizard steps exactly. If not, unexpected results can occur.

Motor Control

From the Torq Perf Mode drop-down list, select “PM Motor”.

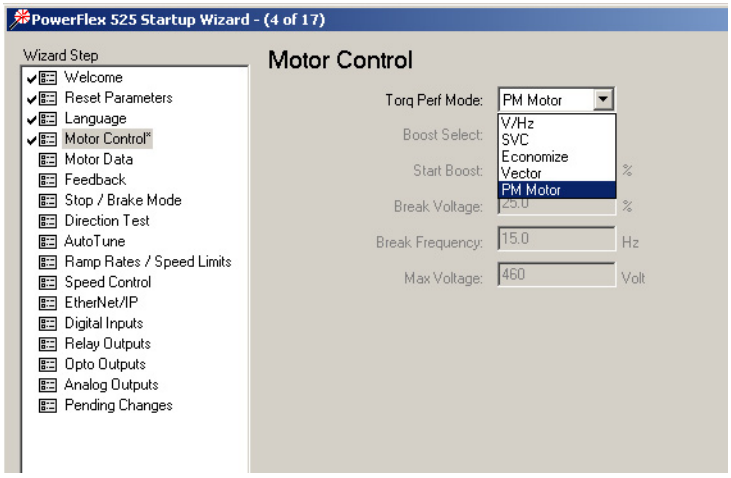

This configuration can also be done by setting parameter P039 [Torq Perf Mode] to 4 “PM Motor”.

Motor Data

Key in the details of your Motor Nameplate.

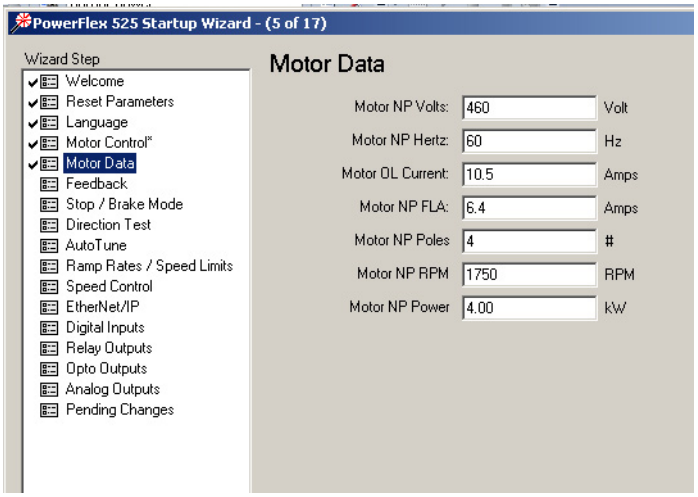

Feedback

If you are configuring a closed loop PM motor control, key in the details of your incremental encoder.

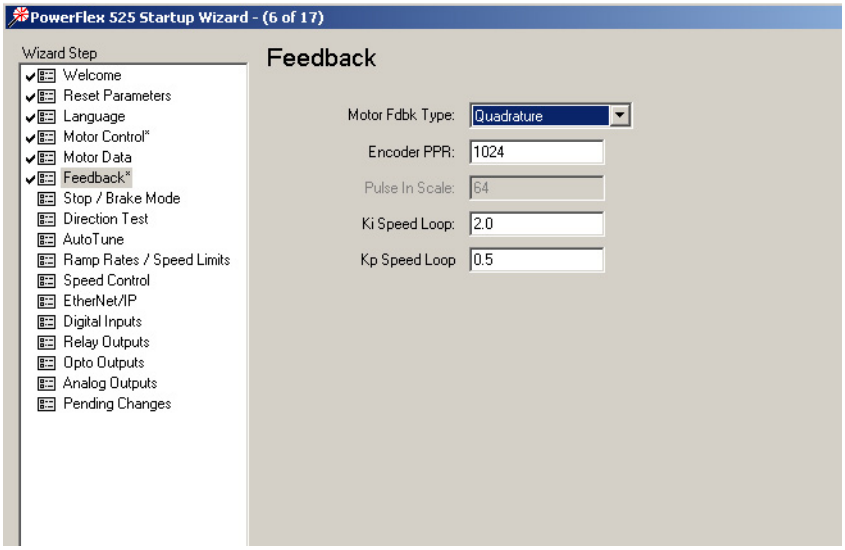

IMPORTANT Note the following:

- PowerFlex 525 drive only supports incremental AB encoder (25-ENC-1).
- Motor Feedback Type can be “Quadrature” or “Quad Check”.
- Only Interior Permanent magnet motor (iPM) is supported for closed loop control.

Stop Mode/Brake Type

Key in the details of your configuration.

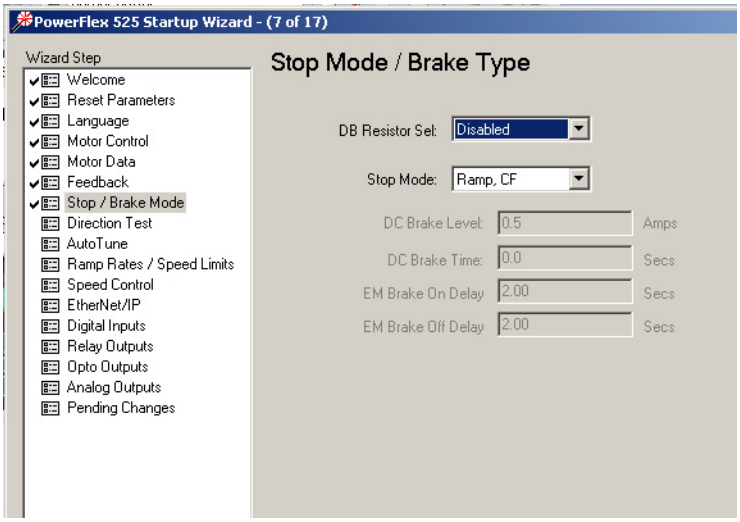

Direction Test

IMPORTANT When configuring a PM motor, it is required to perform a Direction Test before proceeding to the next step (Auto Tune).

Perform a Direction Test. The direction test can be performed with or without the load attached. Consider your application requirements when deciding to have the load attached or removed from the motor. This test runs in V/Hz mode to verify the motor polarity relative to the feedback polarity. The test confirms motor rotation and feedback polarity. After the test is completed, a change can be made, if required.

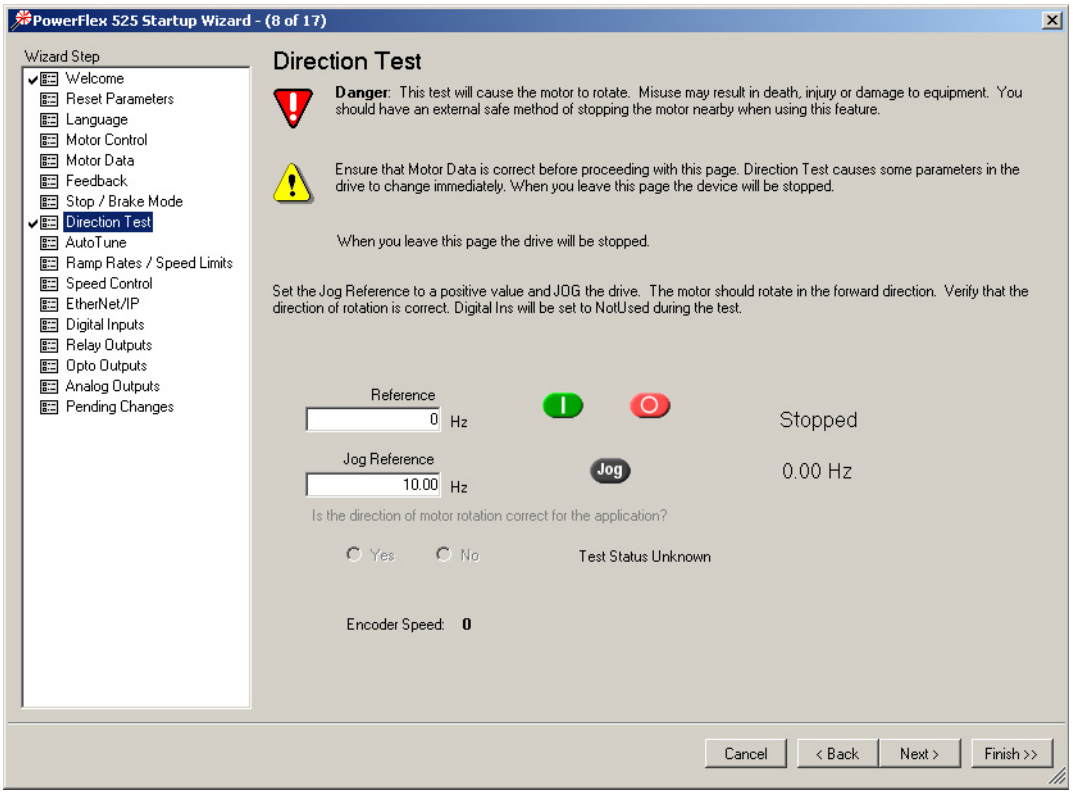

IMPORTANT If the drive was never operated before (new installation), verify that safeguards are in place to remove power safely from the drive during an unstable situation where the drive can produce undesired motion.

Auto Tune

Ensure the load is uncoupled and perform a Rotate Tune test.

The Auto Tune is used to identify the correct motor flux and stator electrical properties, including the following:

- IR volt drop, which is voltage drop over resistance.
- IXd volt drop, which is voltage drop over inductance.
- Flux current (estimated in Static Tune and measured in Rotate Tune test).
- Slip RPM, which is calculated from motor nameplate data. If an encoder is used, the Slip RPM becomes a measured value using the encoder.

Auto Tune Window

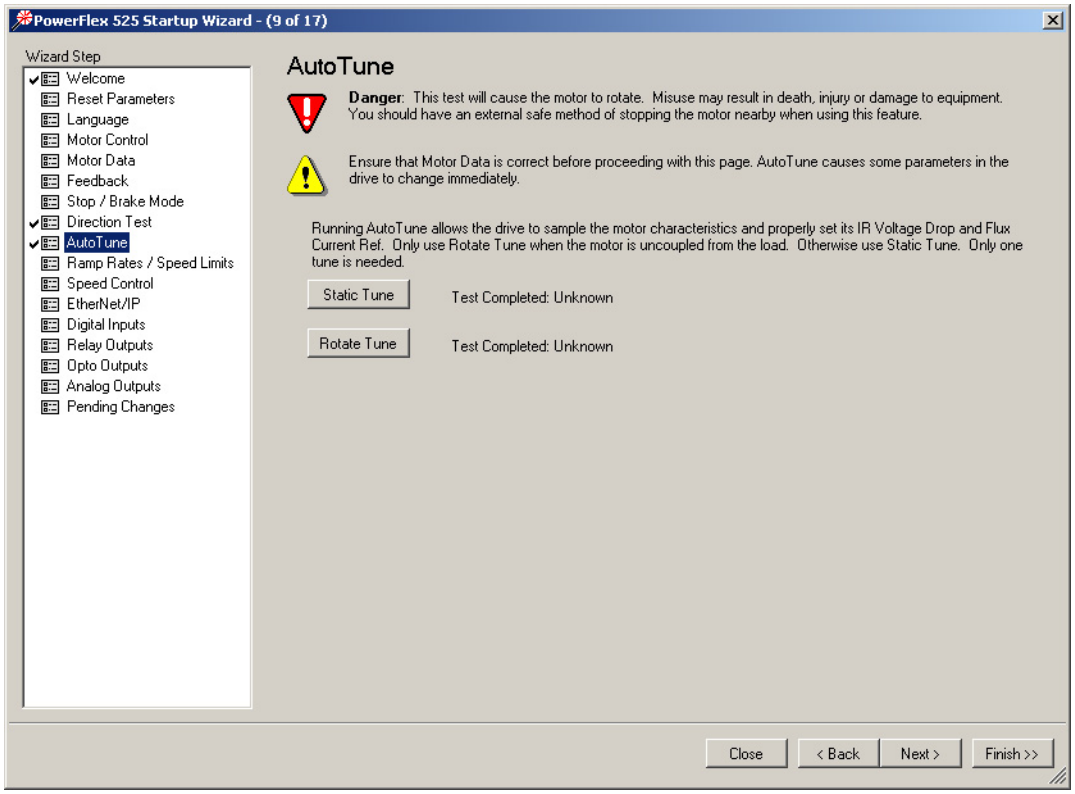

A properly tested motor and drive helps ensure higher starting torque and better performance at low speeds. Conversely, an improperly performed Auto Tune can cause the motor to exhibit instability at low speeds, uneven performances when running through the motor speed range, and can generate unnecessary faults such as overcurrent and overvoltage faults.

Static Tune

This test is used when the motor is connected to a high friction load and cannot easily be uncoupled from the motor, or when the load cannot be rotated due to mechanical constraints or a limited range of movement. The Static Tune test does not generate any motor movement. The Static tune test results may not be as accurate as the Rotate Tune test.

Rotate Tune (preferred for PM motor tuning)

This test is used when the motor is not coupled to the load or the load is low friction. Rotate tune is generally used to better identify motor flux and stator electrical properties, which are used to automatically tune the torque current loop. The Rotate Tune test causes motor rotation at different speeds while it is executing.

ATTENTION: If the drive was never operated before (new installation), verify that safeguards are in place to remove power safely from the drive during an unstable situation where the drive can produce undesired motion.

After completing the configuration and running the Auto Tune test, you may need to perform additional configuration depending on whether you have an open loop or closed loop system.

For an open loop system (A535 [Motor Fdbk Type] = 0 “None”), you may need to adjust two parameters if you encounter momentary reverse startup after a Start command is issued.

For a closed loop system (A535 [Motor Fdbk Type] = 4 “Quadrature” or 5 “Quad Check”, you must perform an angle alignment after the Auto Tune test before running the motor normally.

See Additional PM Motor Configuration on page 262 for instructions.

Manual Configuration Using Drive Keypad

Besides using the PowerFlex 525 Startup Wizard in Connected Components Workbench, you can also manually configure the parameters by using the drive keypad. Make sure you have installed the PowerFlex 525 drive firmware revision 5.001 or later. For instructions, see Download Files on page 252.

To configure the parameters, do the following:

1. Reset all parameters to their default values.
   Set P053 [Reset to Defalts] = 2 “Factory Rset”
2. Select the Control Mode
   Set P039 [Torque Perf Mode] = 4 “PM Control”
3. Enter Motor nameplate data
   - Set P031 [Motor NP Volts]
   - Set P032 [Motor NP Hertz]
   - Set P033 [Motor OL Current]
   - Set P034 [Motor NP FLA]
   - Set P035 [Motor NP Poles]
   - Set P036 [Motor NP RMP]
   - Set P037 [Motor NP Power]
   - Set P043 [Minimum Freq]
   - Set P044 [Maximum Freq]
4. Set A440 [PWM Frequency] = 4.0 kHz (default)
5. Set A535 [Motor Fdbk Type]
   - = 4 “Quadrature” or 5 “Quad Check” (for Closed Loop PM)
     or
   - = 0 “None” (for Open Loop PM)
   - A536 [Encoder PPR]
6. Enter Stop mode and dynamic brake data, if any.
   - P045 [Stop Mode]
   - A437 [DB Resistor Sel]
7. Ensure the load is uncoupled and perform a Rotate Tune test
   Set P040 [Autotune] = 2 “Rotate Tune”
   Press the Start button (Take note of your Start Source settings P046, P048, and P050. Default setting of P046 = 1 “Keypad”)

ATTENTION: If the drive was never operated before (new installation), verify that safeguards are in place to remove power safely from the drive during an unstable situation where the drive can produce undesired motion.

After completing the configuration and running the Auto Tune test, you may need to perform additional configuration depending on whether you have an open loop or closed loop system.

For an open loop system (A535 [Motor Fdbk Type] = 0 “None”), you may need to adjust two parameters if you encounter momentary reverse startup after a Start command is issued.

For a closed loop system (A535 [Motor Fdbk Type] = 4 “Quadrature” or 5 “Quad Check”, you must perform an angle alignment after the Auto Tune test before running the motor normally.

See Additional PM Motor Configuration on page 262 for instructions.

Additional PM Motor Configuration

After completing the initial configuration, there are additional steps that need to be performed to complete the whole PM motor setup.

For an open loop PM motor (iPM and sPM) control, some parameters need to be adjusted to prevent reverse startup. For a closed loop PM motor (iPM), an angle alignment procedure needs to be performed before the motor is run normally.

Additional Setup for Open Loop PM Motor

After performing an autotune on an open loop PM motor, a momentary “reverse startup” may occur. To prevent this from occurring, perform the following steps:

1. Set A516 [PM Initial Sel] = 1 “HFI”.
2. Increase the value of A519 [PM HFI NS Cur] by 10%.
3. Perform a test run at a reference speed and check if the motor reverses.
4. If the motor reverses, repeat steps 2 and 3.
5. If A519 [PM HFI NS Cur] has reached its maximum value (200%):
   - reset the value to the default (100%)
   - set A516 [PM Initial Sel] = 2 “Six Pulse”
6. Perform a test run at a reference speed and check if the motor reverses.
7. If the motor reverses, repeat steps 2 and 3.
8. If A519 [PM HFI NS Cur] has reached its maximum value again and a reverse motor startup still occurs, the motor setup has failed.

Flowchart for Open Loop PM Motor (iPM and sPM) Setup

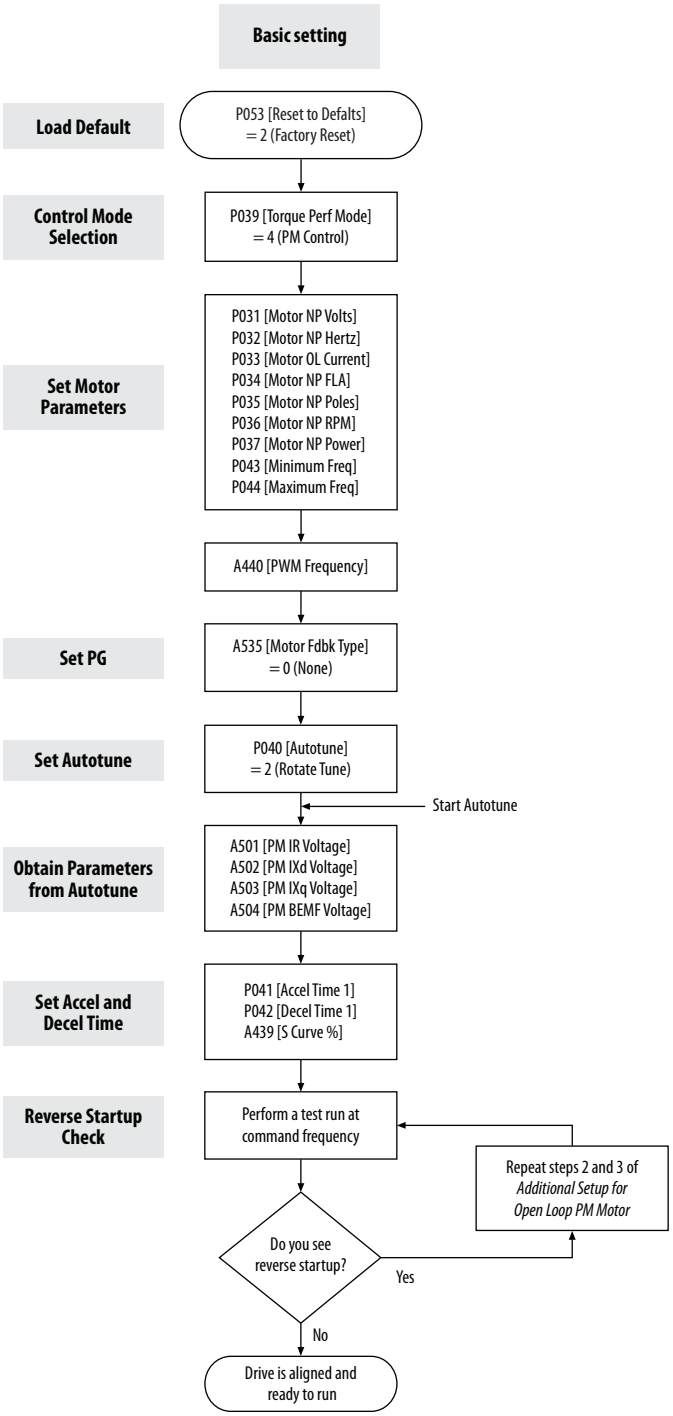

Additional Setup for Closed Loop PM Motor

After performing an autotune on an closed loop PM motor, a PM angle alignment needs to be performed to complete the setup.

Align the PM Angle

To align the PM angle, do the following:

1. Uncouple the load.
2. Set these parameters to the recommended value:
   - A517 [PM DC Inject Cur] = 60% (default is 30%)
   - A518 [PM Align Time] = 5.8 s (default is 0.7 s)
   - A580 [Current Loop BW] = 300 Hz (default is 0 Hz)
3. Set the desired speed (10...40 Hz recommended).
   Check the setting for P047 [Speed Reference 1]. Speed reference can be from POT, control panel of Connected Components Workbench, and so on.
4. Set the Start Source.
   Check the setting for P046 [Start Source 1]. Start source can be from POT, control panel of Connected Components Workbench, and so on.
5. Start the drive to run at the desired speed.
6. Drive will begin to align itself (move forward and reverse) and run to the desired speed.
7. Stop the drive. The drive is now aligned.

TIP The PM angle alignment only needs to be performed once unless the drive is power cycled or re-tuned.

IMPORTANT The PM angle alignment has failed when fault F012 (HW Overcurrent) or F013 (Ground Fault) is observed during acceleration and deceleration.

Adjustments if PM Angle Alignment has Failed

If the PM angle alignment has failed, do the following:

1. Cycle drive power or set A535 [Motor Fdbk Type] = 0 “None”, then set back to 4 “Quadrature” or 5 “Quad Check”.
2. Increase A517 [PM DC Inject Cur] by 50%.
3. Increase A518 [PM Align Time] by 0.2 s.
4. Repeat the Align the PM Angle instructions again, beginning from step 3.

Flowchart for Closed Loop PM Motor (iPM) Setup

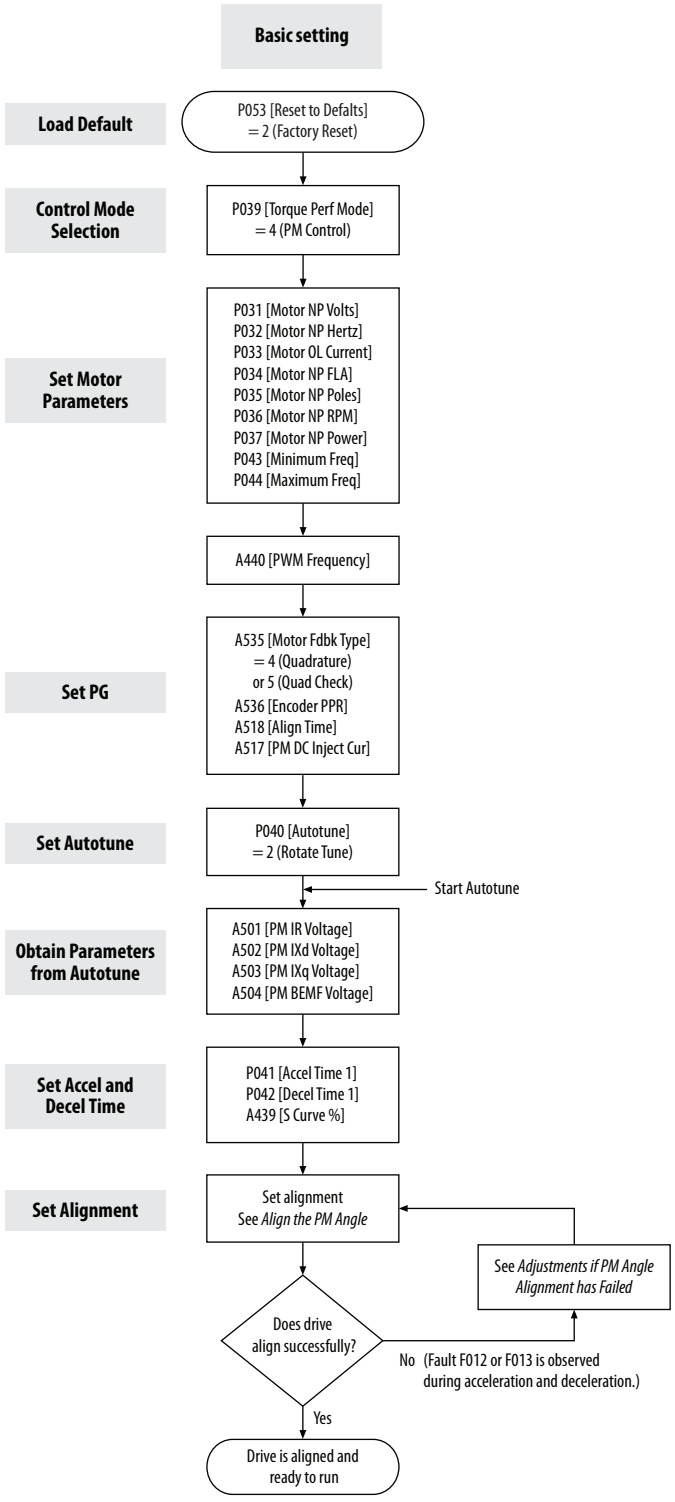

Optional Parameter Adjustments for Optimum Performance

There are a few parameters that you can use to obtain optimum performance during the test run. Usually, the default value of these parameters work well, but you may need to adjust them under different conditions.

1. A517 [PM DC Inject Cur]

   Maximum DC current in amps applied to the motor in order to reset the rotor position of a PM motor.

   Alignment has failed when fault F012 (HW Overcurrent) or F013 (Ground Fault) is observed during acceleration and deceleration.

   Default = 30%
   Increase 50 of A517 [PM DC Inject Cur] for each trial when PM speed response is slow after adding load.

2. A518 [PM Align Time]

   Magnetic pole reorientation time.

   Alignment failed when fault F012 (HW Overcurrent) or F013 (Ground Fault) is observed during acceleration and deceleration.

   Default = 0.7 s
   Increase A518 [PM Align Time] to > 4.7 s.

3. A527 [PM FWKn 1 Kp]

   The gain to ensure good performance in field weakening region.

   Default = 450%
   Increase 100 of A527 [PM FWKn 1Kp] for each trial when PM speed response is slow after adding load.
   Decrease 100 of A527 [PM FWKn 1Kp] for each trial when speed vibration is observed after adding load.

4. A580 [Current loop BW]

   Current loop bandwidth (0 = Auto calculate the control gain of current loop)

   Default = 0 Hz
   Increase 50 of A580 [Current Loop BW] for each trial when PM speed response is slow after adding load.
   Decrease 50 of A580 [Current Loop BW] for each trial when speed instability is observed after adding load.

5. A584 [PM Stable 2 Kp]

The gain for stabilization loop.

Default = 250%
Increase 100 of A584 [PM Stable 2 Kp] for each trial if fault F064 (Drive overload) is experienced at high load.
Applicable to open loop tuning especially for sPM motor. In most cases, the default value will work.

Notes:

Numerics

2-wire
  inputs, **50**
3-wire
  inputs, **50**

A

accel
  override priority, **51**
  selecting, **51**
accessing
  control terminals, **31**
  power terminals, **31**
applications
  safety, **237**
auxiliary contact
  drive, **34**, **36**

B

basic operation, **65**
  drive, **60**, **65**, **162**
  programming, **65**
  safety, **240**

C

circuit breakers
  inputs, **23**
  ratings, **23**
common bus
  drive, **36**
communications
  positioning, **225**
configuring
  RS485(DSI), **202**
control terminals
  accessing, **31**
counter
  programming, **209**, **212**

D

decel
  override priority, **51**
  selecting, **51**
derating
  factor, **125**
  temperature, **17**
digital inputs
  selecting, **50**
  start source, **50**
dimensions
  mounting, **16**, **185**
disconnect
  output, **34**
drive
  auxiliary contact, **34**, **36**
  basic operation, **60**, **65**, **162**
  common bus, **36**
  mount, **15**
  programming, **61**, **64**
  safety, **239**
drive damage
  preventing, **19**
  ungrounded distribution systems, **19**

E

encoder
  programming, **215**
  wiring, **216**
environment
  storage, **18**
Ethernet
  programming, **247**

F

fault monitoring
  ground, **21**
fuses
  rating, **23**

G

ground
  fault monitoring, **21**
  motor, **21**
  RFI filter, **22**
  safety, **21**
  shielding, **21**

H

homing
  automatic, **223**
  manual, **223**
  programming, **223**

I

inputs
  2-wire, **50**
  3-wire, **50**
  circuit breakers, **23**
  power, **20**

L

logic
  basic, **209**, **210**
  timed steps, **209**, **210**

M

Modbus
reading, **205**, **207**, **208**
writing, **203**, **205**, **208**
motor
ground, **21**
start, **34**
stop, **34**
mount
drive, **15**
mounting
dimensions, **16**, **185**

N

noise immunity
wiring, **37**, **202**

O

output
disconnect, **34**
override priority
accel, **51**
decel, **51**
speed reference, **49**
start source, **49**

P

parameters
AppView, **76**, **150**
CustomView, **151**
programming, **63**, **67**
PID
programming, **229**
positioning
communications, **225**
programming, **218**, **220**
power
inputs, **20**
power and control module
separating, **28**
power terminals
accessing, **31**
preventing
drive damage, **19**
programming, **65**
basic logic, **209**, **210**
counter, **209**, **212**
drive, **61**, **64**
encoder, **215**
Ethernet, **247**
homing, **223**
parameters, **63**, **67**
PID, **229**
positioning, **218**, **220**
pulse train, **215**
timed steps, **209**, **210**
timer, **209**, **211**
tools, **64**
pulse train
programming, **215**

R

rating
fuses, **23**
ratings
circuit breakers, **23**
reading
Modbus, **205**, **207**, **208**
recommended
wiring, **36**, **239**
reflected
wave protection, **34**
RFI filter
ground, **22**
RS485(DSI)
configuring, **202**

S

safety
applications, **237**
basic operation, **240**
drive, **239**
ground, **21**
testing, **238**
wiring, **239**
selecting
accel, **51**
decel, **51**
digital inputs, **50**
speed reference, **49**
start source, **49**
separating
power and control module, **28**
shielded
wiring, **33**
shielding
ground, **21**
speed reference
override priority, **49**
selecting, **49**
start
motor, **34**
start source
digital inputs, **50**
override priority, **49**
selecting, **49**
stop
motor, **34**
storage
environment, **18**

T

temperature
derating, **17**
wiring, **33**
testing
safety, **238**
timer
programming, **209**, **211**
tools
programming, **64**

U

unshielded
wiring, **33**

V

voltage reflections
wiring, **34**

W

wave protection
reflected, **34**
wiring
encoder, **216**
noise immunity, **37**, **202**
recommended, **36**, **239**
RS485 (DSI), **201**
safety, **239**
shielded, **33**
temperature, **33**
unshielded, **33**
voltage reflections, **34**
writing
Modbus, **203**, **205**, **208**

Notes:

Rockwell Automation Support

Rockwell Automation provides technical information on the Web to assist you in using its products. At http://www.rockwellautomation.com/support/, you can find technical manuals, a knowledge base of FAQs, technical and application notes, sample code and links to software service packs, and a MySupport feature that you can customize to make the best use of these tools.

Rockwell Automation provides compliance certification support at productcertification@ra.rockwell.com.
Rockwell Automation provides environmental compliance support at ProductStewardship@ra.rockwell.com.
Rockwell Automation provides country of origin certificates at RAEXMClassification@ra.rockwell.com.

For an additional level of technical phone support for installation, configuration, and troubleshooting, we offer TechConnect support programs. For more information, contact your local distributor or Rockwell Automation representative, or visit http://www.rockwellautomation.com/support/.

Installation Assistance

If you experience a problem within the first 24 hours of installation, review the information that is contained in this manual. You can contact Customer Support for initial help in getting your product up and running.

United States or Canada	1.440.646.3434
Outside United States or Canada	Use the Worldwide Locator at http://www.rockwellautomation.com/support/americas/phone_en.html, or contact your local Rockwell Automation representative.

New Product Satisfaction Return

Rockwell Automation tests all of its products to ensure that they are fully operational when shipped from the manufacturing facility. However, if your product is not functioning and needs to be returned, follow these procedures.

United States	Contact your distributor. You must provide a Customer Support case number (call the phone number above to obtain one) to your distributor to complete the return process.
Outside United States	Please contact your local Rockwell Automation representative for the return procedure.

Documentation Feedback

Your comments will help us serve your documentation needs better. If you have any suggestions on how to improve this document, complete this form, publication RA-DU002, available at http://www.rockwellautomation.com/literature/.

Rockwell Automation maintains current product environmental information on its website at http://www.rockwellautomation.com/rockwellautomation/about-us/sustainability-ethics/product-environmental-compliance.page.

www.rockwellautomation.com

Power, Control and Information Solutions Headquarters

Americas: Rockwell Automation, 1201 South Second Street, Milwaukee, WI 53204-2496 USA, Tel: (1) 414.382.2000, Fax: (1) 414.382.4444
Europe/Middle East/Africa: Rockwell Automation NV, Pegasus Park, De Kleetlaan 12a, 1831 Diegem, Belgium, Tel: (32) 2 663 0600, Fax: (32) 2 663 0640
Asia Pacific: Rockwell Automation, Level 14, Core F, Cyberport 3, 100 Cyberport Road, Hong Kong, Tel: (852) 2887 4788, Fax: (852) 2508 1846

PN-386600

Publication 520-UM001I-EN-E – July 2016

PN-386600

Supersedes Publication 520-UM001H-EN-E – April 2016

Copyright © 2016 Rockwell Automation, Inc. All rights reserved.

GOULDS PUMPS

Installation, Operation, and Maintenance Manual

Model 3196 i-FRAME

ITT

ENGINEERED FOR LIFE

Table of Contents

Introduction and Safety 4
Introduction 4
Safety 4
Safety terminology and symbols 5
Environmental safety 6
User safety 6
Ex-approved products 8
Product approval standards 8
Product warranty 9

Transportation and Storage 11
Inspect the delivery 11
Inspect the package 11
Inspect the unit 11
Transportation guidelines 11
Pump handling 11
Lifting methods 11
Storage guidelines 14
Pump storage requirements 14
Frostproofing 15

Product Description 16
General description 3196 16
Part description 3196 17
General description i-*ALERT*® Condition Monitor 18
Nameplate information 19

Installation 22
Preinstallation 22
Pump location guidelines 22
Foundation requirements 22
Baseplate-mounting procedures 23
Prepare the baseplate for mounting 23
Install the baseplate using shims or wedges 24
Install the baseplate using jackscrews 24
Install the baseplate using spring mounting 27
Install the baseplate using stilt mounting 28
Baseplate-leveling worksheet 30
Install the pump, driver, and coupling 31
Pump-to-driver alignment 31
Alignment checks 31
Permitted indicator values for alignment checks 32
Alignment measurement guidelines 32
Attach the dial indicators for alignment 33
Pump-to-driver alignment instructions 33
C-face adapter 36
Grout the baseplate 36
Piping checklists 38
General piping checklist 38
Suction-piping checklist 39
Discharge piping checklist 42

Commissioning, Startup, Operation, and Shutdown 43
Preparation for startup 43
Remove the coupling guard 44
Check the rotation - Frame Mounted 46
Impeller-clearance check 46
Impeller clearances (3196 and HT 3196) 47
Impeller-clearance setting 47
Set the impeller clearance - dial indicator method (all except CV 3196) 48
Set the impeller clearance - feeler gauge method (all except CV 3196) 49
Couple the pump and driver 49
Install the coupling guard 50
Bearing lubrication 54
Shaft-sealing options 56
Mechanical seal options 56
Connection of sealing liquid for mechanical seals 57
Packed stuffing box option 57
Connection of sealing liquid for a packed stuffing box 57
Dynamic-seal option 58
Set an elastomeric face seal 58
Pump priming 58
Prime the pump with the suction supply above the pump 58
Prime the pump with the suction supply below the pump 59
Other methods of priming the pump 61
Start the pump 61
Activate the i-*ALERT*® Condition Monitor 62
i-*ALERT*® Condition Monitor routine operation 63
Pump operation precautions 64
Shut down the pump 65
Deactivate the i-*ALERT*® Condition Monitor 65
Reset the i-*ALERT*® Condition Monitor 65
Make the final alignment of the pump and driver 66

Maintenance 67
Maintenance schedule 67
Bearing maintenance 68
Lubricating-oil requirements 68
Regrease the grease-lubricated bearings 69
Lubricate the bearings after a shutdown period 71
Shaft seal maintenance 71
Mechanical-seal maintenance 71
Packed stuffing-box maintenance 72
Dynamic-seal maintenance 72
Disassembly 73
Disassembly precautions 73
Tools required 73
Drain the pump 74
Remove the coupling 74
Remove the back pull-out assembly 74
Remove the coupling hub 76
Impeller removal 77
Seal-chamber cover removal 79
Remove the seal-chamber cover (3196, CV 3196, HT 3196, LF 3196, 3796) 79
Remove the stuffing-box cover (3196, CV 3196, HT 3196, LF 3196, 3796) 80
Remove the dynamic seal 82
Remove the frame adapter (MTi, LTi, XLT-i, i17) 82
Remove the inboard labyrinth oil seal 83
Power-end disassembly 83

Disassemble the bearing frame 92
Guidelines for i-*ALERT*® Condition Monitor disposal 93
Disassemble the C-face adapter 93
Pre-assembly inspections 94
Replacement guidelines 94
Shaft and sleeve replacement guidelines 96
Bearing-frame inspection 96
C-face adapter inspection 97
Seal chamber and stuffing box cover inspection 98
Bearings inspection 99
Bearing-housing inspection 99
Bearing fits and tolerances 101
Reassembly 101
Assemble the rotating element and the bearing frame (STi and MTi) 101
Assemble the rotating element and the bearing frame (STi and MTi with duplex bearings) 104
Assemble the rotating element and the bearing frame (LTi) 107
Assemble the rotating element and the bearing frame (XLT-i and i17) 110
Assemble the rotating element and the bearing frame (XLT-i and i17 with duplex bearings) 113
Assemble the frame 117
INPRO labyrinth oil seal description 121
Assemble the INPRO labyrinth oil seal 122
Assemble the C-face adapter 122
Shaft sealing 122
Install the impeller 129
Attach the i-*ALERT*® Condition Monitor to the pump 131
Post-assembly checks 132
Install the back pull-out assembly (except HT 3196) 132
Assembly references 134
Spare parts 135
Interchangeability drawings 136
3196 interchangeability 136
Lubrication conversion 137
Frame lubrication conversion 137
Convert from greased-for-life or regreaseable to oil-lubricated bearings 137
Conversion from flood-oil to pure-oil mist 138
Convert from flood oil to regreaseable 138

Troubleshooting 139
Operation troubleshooting 139
Alignment troubleshooting 140
Assembly troubleshooting 140
i-*ALERT*® Condition Monitor troubleshooting 140

Parts Listings and Cross-Sectionals 141
Parts list 141

Certification: CE or CE ATEX 150
Certificates of conformance 150

Other Relevant Documentation or Manuals 156

Local ITT Contacts 157
Regional offices 157

Introduction and Safety

Introduction

Purpose of this manual

The purpose of this manual is to provide necessary information for:

- Installation
- Operation
- Maintenance

CAUTION:
Read this manual carefully before installing and using the product. Improper use of the product can cause personal injury and damage to property, and may void the warranty.

NOTICE:
Save this manual for future reference, and keep it readily available at the location of the unit.

Requesting other information

Special versions can be supplied with supplementary instruction leaflets. See the sales contract for any modifications or special version characteristics. For instructions, situations, or events that are not considered in this manual or in the sales documents, please contact the nearest ITT representative.

Always specify the exact product type and identification code when requesting technical information or spare parts.

Safety

WARNING:

- The operator must be aware of safety precautions to prevent physical injury.
- Any pressure-containing device can explode, rupture, or discharge its contents if it is over-pressurized. Take all necessary measures to avoid over-pressurization.
- Operating, installing, or maintaining the unit in any way that is not covered in this manual could cause death, serious personal injury, or damage to the equipment. This includes any modification to the equipment or use of parts not provided by ITT. If there is a question regarding the intended use of the equipment, please contact an ITT representative before proceeding.
- ⟨Ex⟩ This manual clearly identifies accepted methods for disassembling units. These methods must be adhered to. Trapped liquid can rapidly expand and result in a violent explosion and injury. Never apply heat to impellers, propellers, or their retaining devices to aid in their removal unless explicitly stated in this manual.
- If the pump/motor is damaged or leaking, do not operate as it may cause an electric shock, fire, explosion, liberation of toxic fumes, physical harm, or environmental damage. Correct/repair the problem prior to putting back in service.
- Do not change the service application without the approval of an authorized ITT representative.

CAUTION:
You must observe the instructions contained in this manual. Failure to do so could result in physical injury, damage, or delays.

Safety terminology and symbols

About safety messages

It is extremely important that you read, understand, and follow the safety messages and regulations carefully before handling the product. They are published to help prevent these hazards:

- Personal accidents and health problems
- Damage to the product
- Product malfunction

Hazard levels

Hazard level	Indication
DANGER:	A hazardous situation which, if not avoided, will result in death or serious injury
WARNING:	A hazardous situation which, if not avoided, could result in death or serious injury
CAUTION:	A hazardous situation which, if not avoided, could result in minor or moderate injury
NOTICE:	• A potential situation which, if not avoided, could result in undesirable conditions • A practice not related to personal injury

Hazard categories

Hazard categories can either fall under hazard levels or let specific symbols replace the ordinary hazard level symbols.
Electrical hazards are indicated by the following specific symbol:

Electrical Hazard:

These are examples of other categories that can occur. They fall under the ordinary hazard levels and may use complementing symbols:

- Crush hazard
- Cutting hazard
- Arc flash hazard

The Ex symbol

The Ex symbol indicates safety regulations for Ex-approved products when used in atmospheres that are potentially explosive or flammable.

Environmental safety

The work area

Always keep the station clean to avoid and/or discover emissions.

Waste and emissions regulations

Observe these safety regulations regarding waste and emissions:

- Appropriately dispose of all waste.
- Handle and dispose of the processed liquid in compliance with applicable environmental regulations.
- Clean up all spills in accordance with safety and environmental procedures.
- Report all environmental emissions to the appropriate authorities.

WARNING:
Do NOT send the product to the manufacturer if it has been contaminated by any nuclear radiation. Inform ITT so that accurate actions can take place.

Electrical installation

For electrical installation recycling requirements, consult your local electric utility.

Recycling guidelines

Always follow local laws and regulations regarding recycling.

User safety

General safety rules

These safety rules apply:

- Always keep the work area clean.
- Pay attention to the risks presented by gas and vapors in the work area.
- Avoid all electrical dangers. Pay attention to the risks of electric shock or arc flash hazards.
- Always bear in mind the risk of drowning, electrical accidents, and burn injuries.

Safety equipment

Use safety equipment according to the company regulations. Use this safety equipment within the work area:

- Helmet
- Safety goggles, preferably with side shields
- Protective shoes
- Protective gloves
- Gas mask
- Hearing protection
- First-aid kit
- Safety devices

NOTICE:
Never operate a unit unless safety devices are installed. Also see specific information about safety devices in other sections of this manual.

Electrical connections

Electrical connections must be made by certified electricians in compliance with all international, national, state, and local regulations. For more information about requirements, see sections dealing specifically with electrical connections.

Precautions before work

Observe these safety precautions before you work with the product or are in connection with the product:

- Provide a suitable barrier around the work area, for example, a guard rail.
- Make sure that all safety guards are in place and secure.
- Make sure that you have a clear path of retreat.
- Make sure that the product cannot roll or fall over and injure people or damage property.
- Make sure that the lifting equipment is in good condition.
- Use a lifting harness, a safety line, and a breathing device as required.
- Allow all system and pump components to cool before you handle them.
- Make sure that the product has been thoroughly cleaned.
- Disconnect and lock out power before you service the pump.
- Check the explosion risk before you weld or use electric hand tools.

Precautions during work

Observe these safety precautions when you work with the product or are in connection with the product:

CAUTION:
Read this manual carefully before installing and using the product. Improper use of the product can cause personal injury and damage to property, and may void the warranty.

- Never work alone.
- Always wear protective clothing and hand protection.
- Stay clear of suspended loads.
- Always lift the product by its lifting device.
- Beware of the risk of a sudden start if the product is used with an automatic level control.
- Beware of the starting jerk, which can be powerful.
- Rinse the components in water after you disassemble the pump.
- Do not exceed the maximum working pressure of the pump.
- Do not open any vent or drain valve or remove any plugs while the system is pressurized. Make sure that the pump is isolated from the system and that pressure is relieved before you disassemble the pump, remove plugs, or disconnect piping.
- Never operate a pump without a properly installed coupling guard.
- The coupling guard used in an ATEX classified environment must be constructed from a non-sparking material.

Hazardous liquids

The product is designed for use in liquids that can be hazardous to your health. Observe these rules when you work with the product:

- Make sure that all personnel who work with biologically hazardous liquids are vaccinated against diseases to which they may be exposed.
- Observe strict personal cleanliness.
- A small amount of liquid will be present in certain areas like the seal chamber.

Wash the skin and eyes

1. Follow these procedures for chemicals or hazardous fluids that have come into contact with your eyes or your skin:

Condition	Action
Chemicals or hazardous fluids in eyes	1. Hold your eyelids apart forcibly with your fingers. 2. Rinse the eyes with eyewash or running water for at least 15 minutes. 3. Seek medical attention.
Chemicals or hazardous fluids on skin	1. Remove contaminated clothing. 2. Wash the skin with soap and water for at least 1 minute. 3. Seek medical attention, if necessary.

Ex-approved products

Follow these special handling instructions if you have an Ex-approved unit.

Personnel requirements

These are the personnel requirements for Ex-approved products in potentially explosive atmospheres:

- All work on the product must be carried out by certified electricians and ITT-authorized mechanics. Special rules apply to installations in explosive atmospheres.
- All users must know about the risks of electric current and the chemical and physical characteristics of the gas, the vapor, or both present in hazardous areas.
- Any maintenance for Ex-approved products must conform to international and national standards (for example, IEC/EN 60079-17).

ITT disclaims all responsibility for work done by untrained and unauthorized personnel.

Product and product handling requirements

These are the product and product handling requirements for Ex-approved products in potentially explosive atmospheres:

- Only use the product in accordance with the approved motor data.
- The Ex-approved product must never run dry during normal operation. Dry running during service and inspection is only permitted outside the classified area.
- Before you start work on the product, make sure that the product and the control panel are isolated from the power supply and the control circuit, so they cannot be energized.
- Do not open the product while it is energized or in an explosive gas atmosphere.
- Make sure that thermal contacts are connected to a protection circuit according to the approval classification of the product, and that they are in use.
- Intrinsically safe circuits are normally required for the automatic level-control system by the level regulator if mounted in zone 0.
- The yield stress of fasteners must be in accordance with the approval drawing and the product specification.
- Do not modify the equipment without approval from an authorized ITT representative.
- Only use parts that are provided by an authorized ITT representative.

Product approval standards

Regular standards

All standard products are approved according to CSA standards in Canada and UL standards in USA. The drive unit degree of protection follows IP68. See the nameplate for maximum submersion, according to standard IEC 60529.

All electrical ratings and performance of the motors comply with IEC 600341.

Explosion-proofing standards

All explosion-proof products for use in explosive atmospheres are designed in compliance with one or more of the following approvals:

- EN, ATEX Directive 94/9/EC
- FM According to NEC
  - Class 1 Div 1 Groups “C”, and “D”
  - Class 2 Div 1 Groups “E”, “F”, and “G”
  - Class 3 Div 1 Hazardous Locations

ATEX/IECEx:

- Group: IIC
- Category: Ex ia
- Temperature Class: T4 (for ambients up to 100ºC)
- ATEX Marking: Ex II 1 G

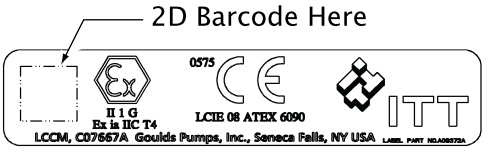

CSA certification

Intrinsically safe for:

- Class I, Div. 1, Groups A, B, C, D
- Class II, Div. 1, Groups E, F, G
- Class III
- Certified to Canadian and US requirements

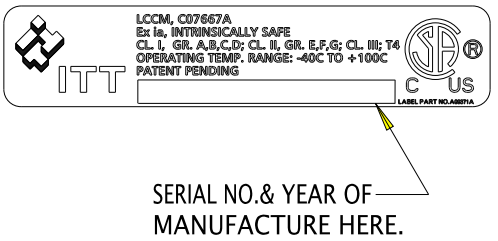

Product warranty

Coverage

ITT undertakes to remedy faults in products from ITT under these conditions:

- The faults are due to defects in design, materials, or workmanship.
- The faults are reported to an ITT representative within the warranty period.
- The product is used only under the conditions described in this manual.
- The monitoring equipment incorporated in the product is correctly connected and in use.
- All service and repair work is done by ITT-authorized personnel.
- Genuine ITT parts are used.
- Only Ex-approved spare parts and accessories authorized by ITT are used in Ex-approved products.

Limitations

The warranty does not cover faults caused by these situations:

- Deficient maintenance
- Improper installation
- Modifications or changes to the product and installation made without consulting ITT
- Incorrectly executed repair work
- Normal wear and tear

ITT assumes no liability for these situations:

- Bodily injuries
- Material damages
- Economic losses

Warranty claim

ITT products are high-quality products with expected reliable operation and long life. However, should the need arise for a warranty claim, then contact your ITT representative.

Transportation and Storage

Inspect the delivery

Inspect the package

1. Inspect the package for damaged or missing items upon delivery.
2. Note any damaged or missing items on the receipt and freight bill.
3. File a claim with the shipping company if anything is out of order.
   If the product has been picked up at a distributor, make a claim directly to the distributor.

Inspect the unit

1. Remove packing materials from the product.
   Dispose of all packing materials in accordance with local regulations.
2. Inspect the product to determine if any parts have been damaged or are missing.
3. If applicable, unfasten the product by removing any screws, bolts, or straps.
   For your personal safety, be careful when you handle nails and straps.
4. Contact your sales representative if anything is out of order.

Transportation guidelines

Pump handling

WARNING:

- Make sure that the unit cannot roll or fall over and injure people or damage property.
- These pumps might use carbon or ceramic silicon carbide components. Do not drop the pump or subject it to shock loads as this can damage the internal ceramic components.

NOTICE:

Use a forklift truck or an overhead crane with sufficient capacity to move the pallet with the pump unit on top. Failure to do so can result in equipment damage.

Lifting methods

WARNING:

- All lifting must be done in compliance with all applicable regulations/standards.
- Assembled units and their components are heavy. Failure to properly lift and support this equipment can result in serious physical injury and/or equipment damage. Lift equipment only at the specifically identified lifting points. Lifting devices such as hoist rings, shackles, slings and spreaders must be rated, selected, and used for the entire load being lifted.
- Crush hazard. The unit and the components can be heavy. Use proper lifting methods and wear steel-toed shoes at all times.
- Do not attach sling ropes to shaft ends.

Table 1: Methods

Pump type	Lifting method
A bare pump without lifting handles	Use a suitable sling attached properly to solid points like the casing, the flanges, or the frames.
A bare pump with lifting handles	Lift the pump by the handles.
A base-mounted pump	Use slings under the pump casing and the drive unit, or under the base rails.
Mounted on top of a Polyshield ANSI Combo	See separate information regarding the Polyshield ANSI Combo.

Examples

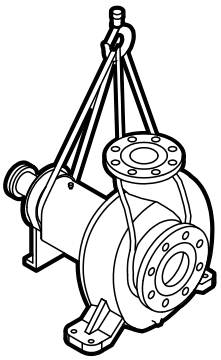

Figure 1: Example of a proper lifting method

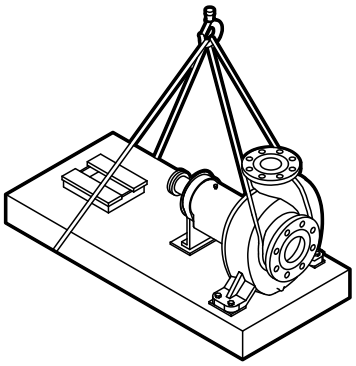

NOTICE:
Do not use this lifting method to lift a Polyshield ANSI Combo with the pump and motor mounted. Doing so may result in equipment damage.

Figure 2: Example of a proper lifting method

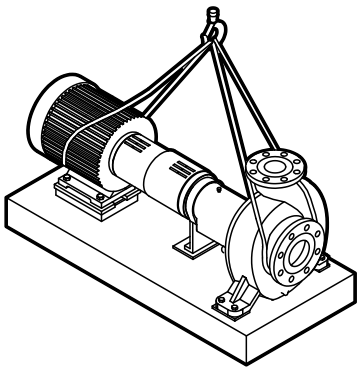

NOTICE:
Do not use this lifting method to lift a Polyshield ANSI Combo with the pump and motor mounted. Doing so may result in equipment damage.

Figure 3: Example of a proper lifting method

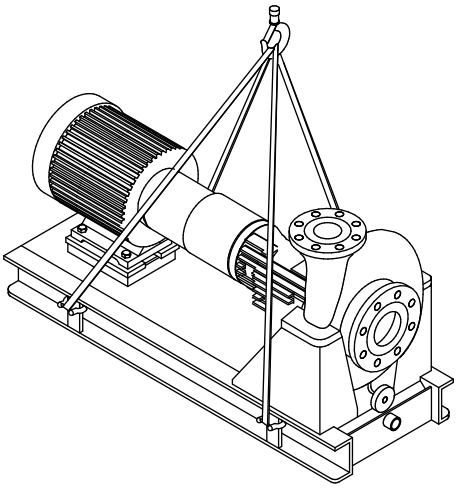

Figure 4: Example of a proper lifting method

NOTICE:
When lifting a unit that does not have a way to secure the strap on the suction flange, you must secure the strap around the frame adapter. Failure to do so may result in equipment damage.

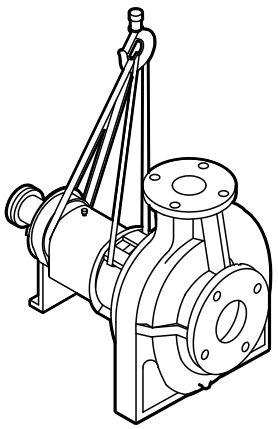

Figure 5: Example of a proper lifting method with a strap secured around the frame adapter

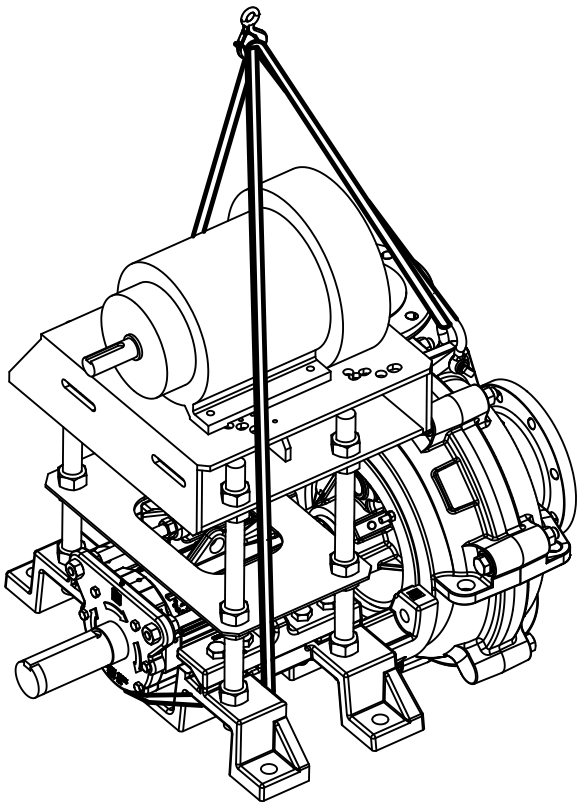

Figure 6: Example of offset overhead motor mount pump proper lifting method

Storage guidelines

Pump storage requirements

Storage requirements depend on the amount of time that you store the unit. The normal packaging is designed only to protect the unit during shipping.

Length of time in storage	Storage requirements
Upon receipt/short-term (less than six months)	• Store in a covered and dry location. • Store the unit free from dirt and vibrations.
Long-term (more than six months)	• Store in a covered and dry location. • Store the unit free from heat, dirt, and vibrations. • Rotate the shaft by hand several times at least every three months.

NOTICE:
Risk of damage to the mechanical seal or shaft sleeve on units supplied with cartridge mechanical seals. Make sure to install and tighten the centering clips and loosen the set screws in the seal locking ring.

Treat bearing and machined surfaces so that they are well preserved. Refer to drive unit and coupling manufacturers for their long-term storage procedures.

You can purchase long-term storage treatment with the initial unit order or you can purchase it and apply it after the units are already in the field. Contact your local ITT sales representative.

Frostproofing

Table 2: Situations when the pump is or is not frostproof

Situation	Condition
Operating	The pump is frostproof.
Immersed in a liquid	The pump is frostproof.
Lifted out of a liquid into a temperature below freezing	The impeller might freeze.

Product Description

General description 3196

The 3196 is a horizontal overhung, open impeller, centrifugal pump. This pump is ANSI B73.1 compliant.
The model is based on 5 power ends and 29 hydraulic sizes.

Figure 7: 3196 pump

This table shows the number of hydraulic sizes available for each drive-unit size group.

Drive-unit size group	Number of hydraulic sizes
STi	5
MTi	15
LTi	15
XLT-i	5
i-17	4

Part description 3196

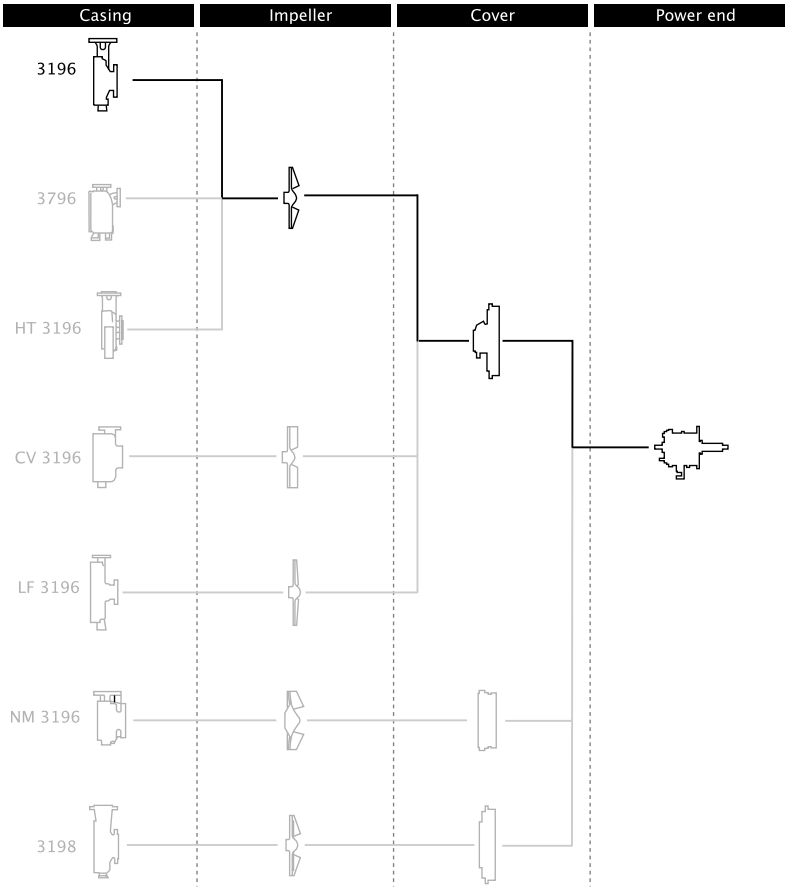

Figure 8: 3196 part description

Table 3: Casing

This table describes the pump casing parts.

Part	Description
Discharge	Top-centerline
Casing ventilation	Self venting
Gasket	Fully confined
Mounting method	Integral foot support for maximum resistance to misalignment due to piping loads.
Standard flange	ANSI flat-faced serrated flange
Optional flanges	One of the following flanges can be used: • ANSI class 150 raised-face serrated flange • ANSI class 300 flat-face serrated flange • ANSI class 300 raised-face serrated flange

Impeller

The impeller is

- fully open
- screwed onto the shaft

The threads are sealed from the pumped liquid by a Teflon O-ring for the 3196.

Cover

Standard seal

- The 3196 is available with a stuffing-box cover designed for a packing and a BigBore or a TaperBore PLUS seal chamber.

Optional seal

- a dynamic seal is available which uses a repeller to pump liquid out of the stuffing box while the pump operates. A static seal prevents leakage when the pump is shut down.

Table 4: Power end

This table describes the main parts of the power end.

Part	Description
Frame adapter	The ductile iron frame adapter has • a machined rabbet fitted to the seal chamber/ stuffing box cover • a precision dowel pin fitted to the bearing frame.

Power end	• Flood-oil lubrication is standard.
	• No machining is required to convert from oil to grease or oil-mist lubrication. Regreasable bearings and oil-mist lubrication are optional.
	• The oil level is checked through a sight glass.
	• The power end is sealed with labyrinth seals.
	• The power end is made in the following sizes:
	  • STi
	  • MTi
	  • LTi
	  • XLT-i
	  • i-17

Shaft	The shaft is available with or without a sleeve.
Bearings	The inboard bearing • carries only radial loads. • is free to float axially in the frame. • is a single-row deep-groove ball bearing The outboard bearing • is shouldered and locked to the shaft and housing to enable it to carry radial and thrust loads. • is a double-row angular-contact bearing, except for the LTi which uses a pair of single-row angular-contact ball bearings mounted back-to-back.

General description i-*ALERT*® Condition Monitor

Description

The i-*ALERT*® Condition Monitor is a compact, battery-operated monitoring device that continuously measures the vibration and temperature of the pump power end. The condition monitor uses blinking red LEDs to alert the pump operator when the pump exceeds pre-set vibration and temperature limits. This allows the pump operator to make changes to the process or the pump before a catastrophic failure occurs. The condition monitor is also equipped with a single green LED to indicate when it is operational and has sufficient battery life. (i-*ALERT*®*2* Bluetooth Equipment Health Monitor option available. The i-*ALERT*®*2* monitor allows customers to identify potential problems before they become costly failures. It tracks vibration, temperature and run-time hours and wirelessly syncs the data with a smart phone or tablet the i-*ALERT*®*2* mobile app. More information available on *http://www.ittproservices.com/aftermarket-products/monitoring/i-alert2/* (page)i-ALERT2.com).

Software License Agreement

BY USING THE i-*ALERT*® CONDITION MONITOR, YOU AGREE TO BE BOUND BY THE TERMS AND CONDITIONS OF THE FOLLOWING LICENSE AGREEMENT. PLEASE READ THIS AGREEMENT CAREFULLY.

ITT Corporation and its subsidiaries, affiliates, either directly, or through its authorized sublicensees ("ITT") grants you a limited, non-exclusive license to use the software embedded in this device ("Software") in binary executable form in the normal operation of the i-*ALERT*® condition monitor for monitoring the condition of an Goulds Pump Inc. model. Title, ownership rights, and intellectual property rights in and to the Software remain in ITT or its third-party providers. You agree that this license agreement does not need to be signed for it to take effect.

You acknowledge that this Software is the property of ITT and is protected under United States of America copyright laws and international copyright treaties. You further acknowledge that the structure, organization, and code of the Software are valuable trade secrets of ITT and/or its third-party providers and that the Software in source code form remains a valuable trade secret of ITT. You agree not to decompile, disassemble, modify, reverse assemble, reverse engineer, or reduce to human readable form the Software or any part thereof or create any derivative works based on the Software. You agree not to export or re-export the Software to any country in violation of the export control laws of the United States of America.

Alarm mode

The condition monitor enters alarm mode when either vibration or temperature limits are exceeded over two consecutive readings within a ten minute period. Alarm mode is indicated with two red flashing LEDs within two second intervals.

Temperature and vibration limits

Variable	Limit
Temperature	91°C | 195°F
Vibration	100% increase over the baseline level

Battery life

The i-*ALERT*® Condition Monitor battery is not replaceable. You must replace the entire unit once the battery runs out of power.

The battery life is not covered as part of the standard pump warranty.

This table shows the average condition monitor battery life under normal and alarm-mode operating conditions.

Condition monitor operational state	Battery life
Normal operating and environmental conditions	Three to five years
Alarm mode	One year

Nameplate information

Important information for ordering

Every pump has nameplates that provide information about the pump. The nameplates are located on the casing and the bearing frame.

When you order spare parts, identify this pump information:

- Model
- Size
- Serial number
- Item numbers of the required parts

Refer to the nameplate on the pump casing for most of the information. See Parts List for item numbers.

Nameplate types

Nameplate	Description
Pump casing Pump	Provides information about the hydraulic characteristics of the pump. The formula for the pump size is: Discharge x Suction - Nominal Maximum Impeller Diameter in inches. (Example: 2x3-8)
Bearing frame	Provides information about the lubrication system used.
ATEX	If applicable, your pump unit might have an ATEX nameplate affixed to the pump, the baseplate, or the discharge head. The nameplate provides information about the ATEX specifications of this pump.
IECEx	If applicable, your pump unit might have the following IECEx nameplate affixed to the pump and/or baseplate. The nameplate provides information about the IECEx specifications of this pump.

Nameplate on the pump casing using English units

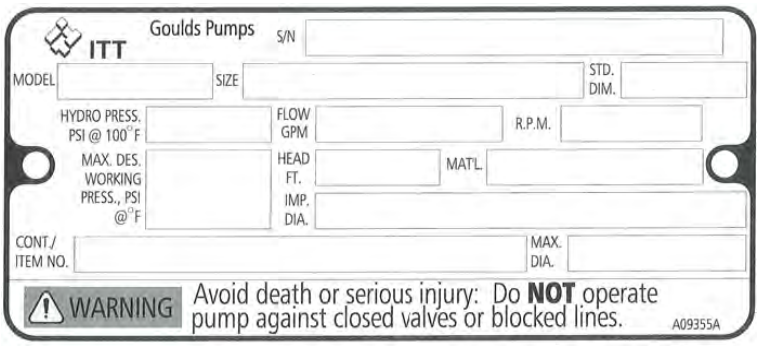

Figure 9: Nameplate on the pump casing using English units

Table 5: Explanation of nameplate on the pump casing

Nameplate field	Explanation
IMPLR. DIA.	Impeller diameter, in inches
MAX. DIA.	Maximum impeller diameter, in inches
GPM	Rated pump flow, in gallons per minute
FT HD	Rated pump head, in feet
RPM	Rated pump speed, revolutions per minute
MOD.	Pump model
SIZE	Size of the pump
STD. NO.	ANSI standard designation
MAT L. CONST.	Material of which the pump is constructed
SER. NO.	Serial number of the pump
MAX DSGN PSI @ 100ºF	Maximum pressure at 100ºF according to the pump design

Nameplate on the pump casing using metric units

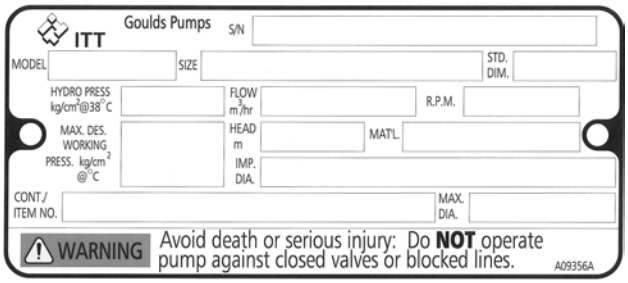

Figure 10: Metric units - nameplate on pump casing

Table 6: Explanation of the nameplate on the pump casing

Nameplate field	Explanation
IMPLR. DIA.	Impeller diameter
MAX. DIA.	Maximum impeller diameter
M^3/HR	Rated pump flow, in cubic meters per hour
M HD	Rated pump head, in meters
RPM	Rated pump speed, in revolutions per minute
MOD.	Pump model
SIZE	Size of the pump
STD. NO.	ANSI standard designation
MAT L. CONST	Material of which the pump is constructed
SER. NO.	Serial number of the pump
MAX. DSGN KG/CM^3 @ 20°C	Kilograms per cubic centimeter at 20°C

Nameplate on the bearing frame

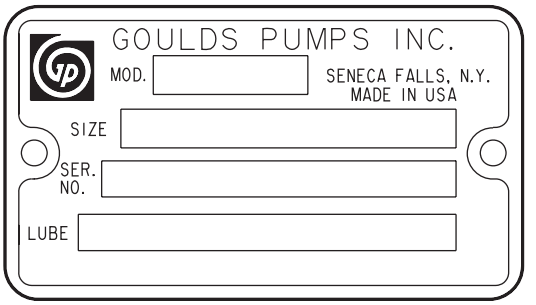

Figure 11: Nameplate on the bearing frame

Table 7: Explanation of the nameplate on the bearing frame

Nameplate field	Explanation
BRG. O. B.	Outboard bearing designation
BRG. I. B.	Inboard bearing designation
S/N	Serial number of the pump
LUBE	Lubricant, oil or grease

ATEX nameplate

Figure 12: ATEX nameplate

Nameplate field	Explanation
II	Group 2
2	Category 2
G/D	Pump can be used when gas and dust are present
T4	Temperature class

NOTICE:
Make sure that the code classifications on the pump are compatible with the specific environment in which you plan to install the equipment. If they are not compatible, do not operate the equipment and contact your ITT representative before you proceed.

Installation

Preinstallation

Precautions

WARNING:

- ⟨Ex⟩ When installing in a potentially explosive environment, make sure that the motor is properly certified.
- ⟨Ex⟩ You must earth (ground) all electrical equipment. This applies to the pump equipment, the driver, and any monitoring equipment. Test the earth (ground) lead to verify that it is connected correctly.
- Electrical connections must be made by certified electricians in compliance with all international, national, state, and local rules.

NOTICE:
Supervision by an authorized ITT representative is recommended to ensure proper installation. Failure to do so may result in equipment damage or decreased performance.

Pump location guidelines

WARNING:
Assembled units and their components are heavy. Failure to properly lift and support this equipment can result in serious physical injury and/or equipment damage. Lift equipment only at the specifically identified lifting points. Lifting devices such as hoist rings, shackles, slings and spreaders must be rated, selected, and used for the entire load being lifted.

Guideline	Explanation/comment
Keep the pump as close to the liquid source as practically possible.	This minimizes the friction loss and keeps the suction piping as short as possible.
Make sure that the space around the pump is sufficient.	This facilitates ventilation, inspection, maintenance, and service.
If you require lifting equipment such as a hoist or tackle, make sure that there is enough space above the pump.	This makes it easier to properly use the lifting equipment and safely remove and relocate the components to a safe location.
Protect the unit from weather and water damage due to rain, flooding, and freezing temperatures.	This is applicable if nothing else is specified.
Do not install and operate the equipment in closed systems unless the system is constructed with properly-sized safety devices and control devices.	Acceptable devices: • Pressure relief valves • Compression tanks • Pressure controls • Temperature controls • Flow controls If the system does not include these devices, consult the engineer or architect in charge before you operate the pump.
Take into consideration the occurrence of unwanted noise and vibration.	The best pump location for noise and vibration absorption is on a concrete floor with subsoil underneath.
If the pump location is overhead, undertake special precautions to reduce possible noise transmission.	Consider a consultation with a noise specialist.

Foundation requirements

Requirements

- The foundation must be able to absorb any type of vibration and form a permanent, rigid support for the unit.

- The location and size of the foundation bolt holes must match those shown on the assembly drawing provided with the pump data package.
- The foundation must weigh between two and three times the weight of the pump.
- Provide a flat, substantial concrete foundation in order to prevent strain and distortion when you tighten the foundation bolts.

Sleeve-type bolts

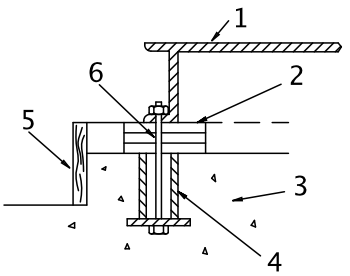

Figure 13: Sleeve type bolts

1. Baseplate
2. Shims or wedges
3. Foundation
4. Sleeve
5. Dam
6. Bolt

J-type bolts

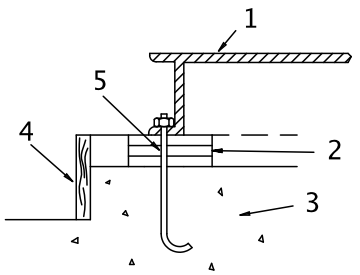

Figure 14: J-type bolts

1. Baseplate
2. Shims or wedges
3. Foundation
4. Dam
5. Bolt

Baseplate-mounting procedures

Prepare the baseplate for mounting

1. Remove all the attached equipment from the baseplate.
2. Clean the underside of the baseplate completely.
3. If applicable, coat the underside of the baseplate with an epoxy primer.
   Use an epoxy primer only if you used an epoxy-based grout.
4. Remove the rust-proofing coat from the machined mounting pads using an appropriate solvent.
5. Remove water and debris from the foundation-bolt holes.

Install the baseplate using shims or wedges

Required tools:

- Two sets of shims or wedges for each foundation bolt
- Two machinist's levels
- Baseplate-leveling worksheet

This procedure is applicable to cast iron and fabricated steel baseplates.

1. If you use sleeve-type bolts, fill the bolt sleeves with packing material or rags to prevent grout from entering the bolt holes.
2. Put the sets of wedges or shims on each side of each foundation bolt.
   The sets of wedges should have a height of between 19 mm | 0.75 in. and 38 mm | 1.50 in.

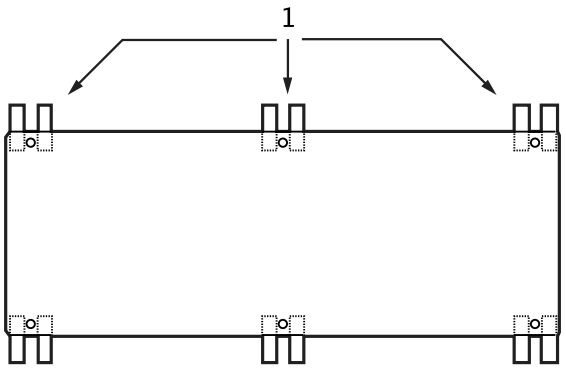

1. Shims or wedges

Figure 15: Top view

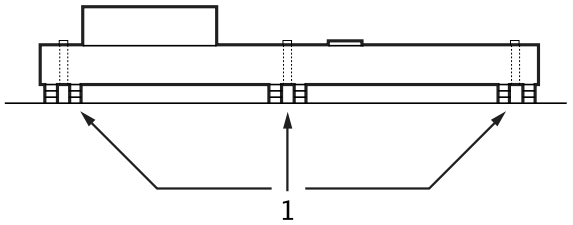

1. Shims or wedges

Figure 16: Side view

3. Lower the baseplate carefully onto the foundation bolts.
4. Put the machinist's levels across the mounting pads of the driver and the mounting pads of the pump.

NOTICE:
Remove all dirt from the mounting pads in order to make sure that you achieve the correct leveling. Failure to do so can result in equipment damage or decreased performance.

5. Level the baseplate both lengthwise and across by adding or removing shims or moving the wedges.
   These are the leveling tolerances:
   - A maximum difference of 3.2 mm | 0.125 in. lengthwise
   - A maximum difference of 1.5 mm | 0.059 in. across

   You can use the baseplate-leveling worksheet when you take the readings.
6. Hand-tighten the nuts for the foundation.

Install the baseplate using jackscrews

Tools required:

- Anti-seize compound

- Jackscrews
- Bar stock
- Two machinist's levels
- Baseplate-leveling worksheet

This procedure is applicable to the feature-fabricated steel baseplate and the advantage base baseplate.

1. Apply an anti-seize compound on the jackscrews.
   The compound makes it easier to remove the screws after you grout.
2. Lower the baseplate carefully onto the foundation bolts and perform these steps:
   a) Cut the plates from the bar stock and chamfer the edges of the plates in order to reduce stress concentrations.
   b) Put the plates between the jackscrews and the foundation surface.
   c) Use the four jackscrews in the corners in order to raise the baseplate above the foundation.
      Make sure that the distance between the baseplate and the foundation surface is between 19 mm | 0.75 in. and 38 mm | 1.50 in.
   d) Make sure that the center jackscrews do not touch the foundation surface yet.

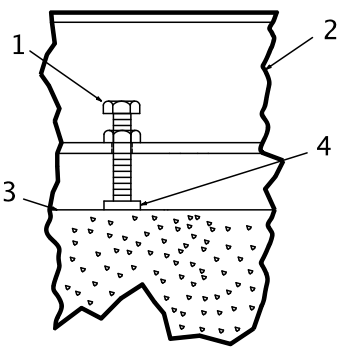

1. Jackscrew
2. Baseplate
3. Foundation
4. Plate

Figure 17: Jackscrews

3. Level the driver mounting pads:

NOTICE:
Remove all dirt from the mounting pads in order to make sure that you achieve the correct leveling. Failure to do so can result in equipment damage or decreased performance.

   a) Put one machinist's level lengthwise on one of the two pads.
   b) Put the other machinist's level across the ends of the two pads.

c) Level the pads by adjusting the four jackscrews in the corners.
Make sure that the machinist's level readings are as close to zero as possible, both lengthwise and across.
Use the baseplate-leveling worksheet when you take the readings.

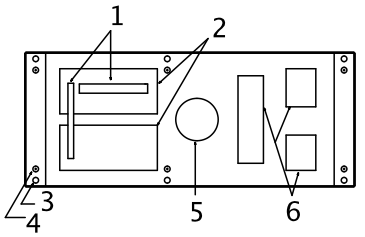

1. Machinist's levels
2. Driver's mounting pads
3. Foundation bolts
4. Jackscrews
5. Grout hole
6. Pump's mounting pads

Figure 18: Level driver mounting pads

4. Turn the center jackscrews down so that they rest on their plates on the foundation surface.
5. Level the pump mounting pads:

NOTICE:
Remove all dirt from the mounting pads in order to make sure that you achieve the correct leveling. Failure to do so can result in equipment damage or decreased performance.

---

a) Put one machinist's level lengthwise on one of the two pads.
b) Put the other level across the center of the two pads.
c) Level the pads by adjusting the four jackscrews in the corners.
Make sure that the machinist's level readings are as close to zero as possible, both lengthwise and across.

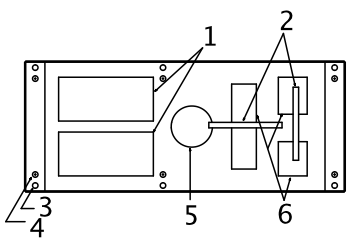

1. Driver's mounting pads
2. Machinist's levels
3. Foundation bolts
4. Jackscrews
5. Grout hole
6. Pump's mounting pads

Figure 19: Level pump mounting pads

6. Hand-tighten the nuts for the foundation bolts.
7. Check that the driver's mounting pads are level and adjust the jackscrews and the foundation bolts if necessary.
The correct level measurement is a maximum of 0.0167 mm/m | 0.002 in./ft .

Install the baseplate using spring mounting

NOTICE:
The spring-mounted baseplate is designed only to support piping loads from thermal expansion. You must support the suction and discharge piping individually. Failure to do so may result in equipment damage.

The foundation pads are not provided with the baseplate. Make sure that the foundation pads are 316 stainless-steel plates, which have a 16-20 micro-inch surface finish.

Before you start this procedure, make sure that the foundation pads are correctly installed on the foundation/floor (see the manufacturer's instructions).

1. Put the baseplate on a support above the foundation/floor.
   Make sure that there is enough space between the baseplate and the foundation/floor in order to install the spring assemblies.
2. Install the lower part of the spring assembly:
   a) Screw the lower jam nut onto the spring stud.
   b) Screw the lower adjusting nut onto the spring-stud, on top of the jam nut.
   c) Set the lower adjusting nut to the correct height.
      The correct height depends on the required distance between the foundation/floor and the baseplate.
   d) Put a washer, a follower, a spring, and one more follower onto the lower adjusting nut.
3. Install the spring assembly on the baseplate:
   a) Insert the spring assembly into the baseplate's anchorage hole from below.
   b) Put a follower, a spring, another follower, and a washer onto the spring stud.
   c) Fasten the spring assembly with the upper adjusting nut by hand.
4. Thread the upper jam nut onto the spring stud by hand.
5. Repeat steps 2 through 4 for all the spring assemblies.
6. Lower the baseplate so that the spring assemblies fit into the foundation pads.
7. Level the baseplate and make the final height adjustments:
   a) Loosen the upper jam nuts and adjusting nuts.
   b) Adjust the height and level the baseplate by moving the lower adjusting nuts.
   c) When the baseplate is level, tighten the top adjusting nuts so that the top springs are not loose in their followers.
8. Fasten the lower and upper jam nuts on each spring assembly.

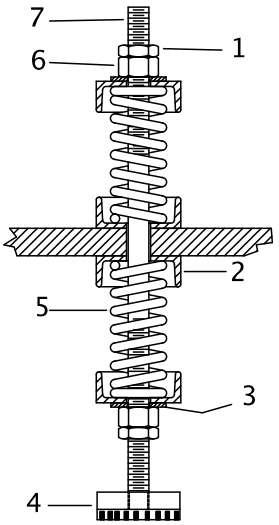

1. Upper jam nut
2. Follower
3. Washer
4. Foundation pads
5. Spring
6. Upper adjusting nut
7. Spring stud

Figure 20: Example of an installed spring assembly

Install the baseplate using stilt mounting

NOTICE:
The stilt-mounted baseplate is not designed to support static piping loads. Make sure to individually support the suction and discharge piping. Failure to do so may result in equipment damage.

1. Put the baseplate on a support above the foundation/floor.
   Make sure that there is enough space between the baseplate and the foundation/floor to install the stilts.
2. Install the lower part of the stilt assembly:
   a) Screw the lower jam nut and adjusting nut onto the stilt.
   b) Set the lower adjusting nut to the correct height.
      The correct height depends on the required distance between the foundation/floor and the baseplate.
   c) Put a washer onto the lower adjusting- nut.
3. Install the stilt assembly on the baseplate:
   a) Insert the stilt assembly into the baseplate's anchorage hole from below.
   b) Put a washer onto the stilt.
   c) Fasten the stilt assembly with the upper adjusting nut by hand.
4. Screw the upper jam nut onto the stilt by hand.
5. Repeat steps 2 through 4 for all the stilt assemblies.
6. Lower the baseplate so that the stilts fit into the foundation cups.
7. Level the baseplate and make the final height adjustments:
   a) Loosen the upper jam nuts and adjusting nuts.
   b) Adjust the height and level the baseplate by moving the lower adjusting nuts.
   c) When the baseplate is level, tighten the top adjusting nuts.
8. Fasten the lower and upper jam nuts on each stilt.

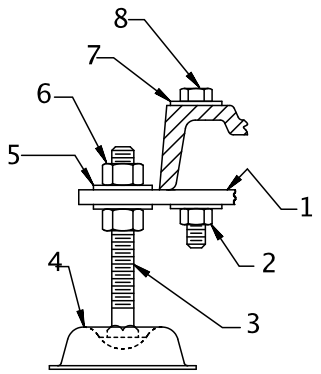

1. Mounting plate
2. Mounting nut
3. Stilt bolt
4. Foundation cups
5. Washer
6. Upper adjustment nut
7. Mounting washer
8. Mounting bolt

Figure 21: Example of an installed stilt assembly

Baseplate-leveling worksheet

Level measurements

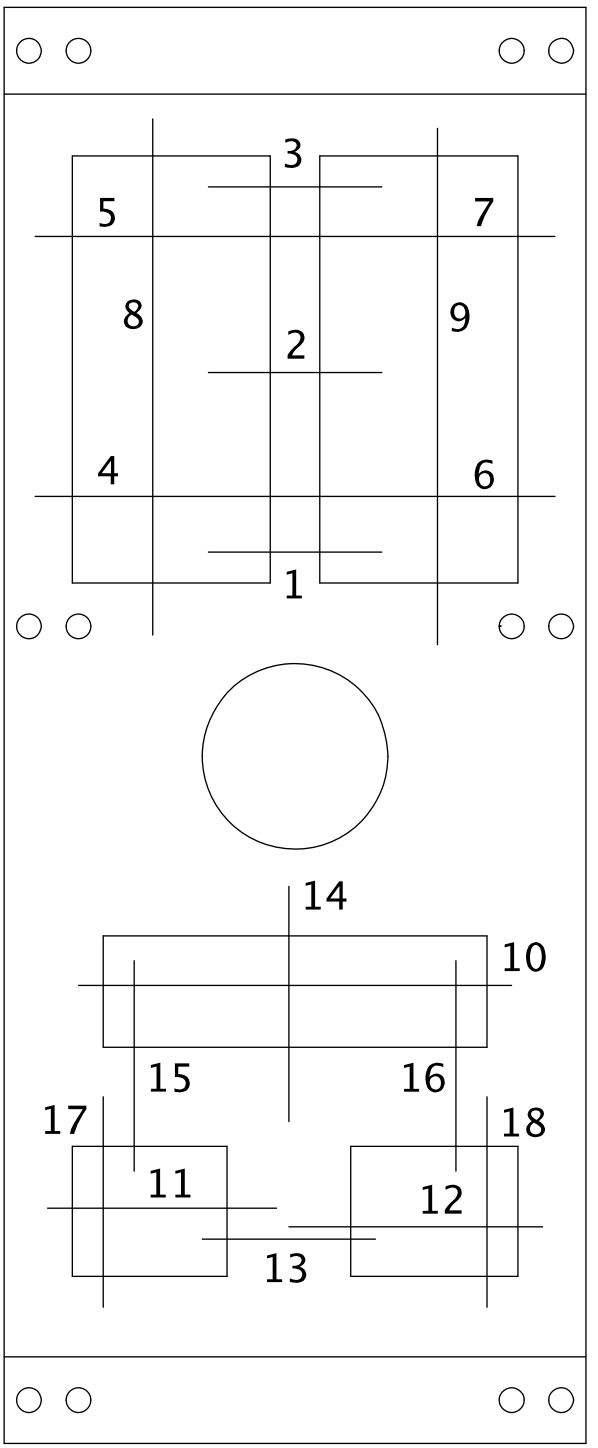

1)_____

2)_____

3)_____

4)_____

5)_____

6)_____

7)_____

8)_____

9)_____

10)_____

11)_____

12)_____

13)_____

14)_____

15)_____

16)_____

17)_____

18)_____

Install the pump, driver, and coupling

1. Mount and fasten the pump on the baseplate. Use applicable bolts.
2. Mount the driver on the . Use applicable bolts and hand tighten.
3. Install the coupling.
   See the installation instructions from the coupling manufacturer.

Pump-to-driver alignment

Precautions

WARNING:

- Follow shaft alignment procedures in order to prevent catastrophic failure of drive components or unintended contact of rotating parts. Follow the coupling installation and operation procedures from the coupling manufacturer.
- Ⓔx Always disconnect and lock out power to the driver before you perform any installation or maintenance tasks. Failure to disconnect and lock out driver power will result in serious physical injury.
  - Electrical connections must be made by certified electricians in compliance with all international, national, state, and local rules.
  - Refer to driver/coupling/gear manufacturers installation and operation manuals (IOM) for specific instructions and recommendations.

NOTICE:

Proper alignment is the responsibility of the installer and the user of the unit. Check the alignment of frame-mounted units before you operate the unit. Failure to do so can result in equipment damage or decreased performance.

Alignment checks

When to perform alignment checks

You must perform alignment checks under these circumstances:

- The process temperature changes.
- The piping changes.
- The pump has been serviced.

Types of alignment checks

Type of check	When it is used
Initial alignment (cold alignment) check	Prior to operation when the pump and the driver are at ambient temperature.
Final alignment (hot alignment) check	After operation when the pump and the driver are at operating temperature.

Initial alignment (cold alignment) checks

When	Why
Before you grout the baseplate	This ensures that alignment can be accomplished.
After you grout the baseplate	This ensures that no changes have occurred during the grouting process.
After you connect the piping	This ensures that pipe strains have not altered the alignment. If changes have occurred, you must alter the piping to remove pipe strains on the pump flanges.

Final alignment (hot alignment) checks

When	Why
After the first run	This ensures correct alignment when both the pump and the driver are at operating temperature.
Periodically	This follows the plant operating procedures.

Permitted indicator values for alignment checks

NOTICE:
The specified permitted reading values are valid only at operating temperature. For cold settings, other values are permitted. You must use the correct tolerances. Failure to do so can result in misalignment and reduced pump reliability.

When dial indicators are used to check the final alignment, the pump and drive unit are correctly aligned when these conditions are true:

- The Total Indicated Reading (T.I.R.) is at 0.05 mm | 0.002 in. or less at operating temperature.
- The tolerance of the indicator is 0.0127 mm per mm | 0.0005 in. per in. of indicator separation for the reverse dial indicator or laser method when the pump and driver are at operating temperature.

Cold settings for parallel vertical alignment

Introduction

This section shows the recommended preliminary (cold) settings for electric motor-driven pumps based on different temperatures of pumped fluid. Consult driver manufacturers for recommended cold settings for other types of drivers such as steam turbines and engines.

Recommended settings for models 3196, CV 3196, and LF 3196

Pumpage temperature	Recommended setting
10°C | 50°F	0.05 mm | 0.002 in., low
65°C | 150°F	0.03 mm | 0.001 in., high
120°C | 250°F	0.12 mm | 0.005 in., high
175°C | 350°F	0.23 mm | 0.009 in., high
218°C | 450°F	0.33 mm | 0.013 in., high
228°C | 550°F	0.43 mm | 0.017 in., high
343°C | 650°F	0.53 mm | 0.021 in., high
371°C | 700°F	0.58 mm | 0.023 in., high

Alignment measurement guidelines

Guideline	Explanation
Rotate the pump coupling half and the driver coupling half together so that the indicator rods have contact with the same points on the driver coupling half.	This prevents incorrect measurement.
Move or shim only the driver in order to make adjustments.	This prevents strain on the piping installations.
Make sure that the hold-down bolts for the driver feet are tight when you take indicator measurements.	This keeps the driver stationary since movement causes incorrect measurement.
Make sure that the hold-down bolts for the driver feet are loose before you make alignment corrections.	This makes it possible to move the driver when you make alignment corrections.
Check the alignment again after any mechanical adjustments.	This corrects any misalignments that an adjustment may have caused.

Attach the dial indicators for alignment

You must have two dial indicators in order to complete this procedure.

1. Attach two dial indicators on the pump coupling half (X):
   a) Attach one indicator (P) so that the indicator rod comes into contact with the perimeter of the driver coupling half (Y).
   This indicator is used to measure parallel misalignment.
   b) Attach the other indicator (A) so that the indicator rod comes into contact with the inner end of the driver coupling half.
   This indicator is used to measure angular misalignment.

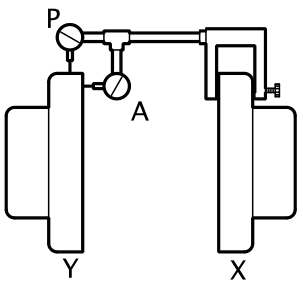

Figure 22: Dial indicator attachment

2. Rotate the pump coupling half (X) in order to check that the indicators are in contact with the driver coupling half (Y) but do not bottom out.
3. Adjust the indicators if necessary.

Pump-to-driver alignment instructions

Perform angular alignment for a vertical correction

1. Set the angular alignment indicator to zero at the top-center position (12 o'clock) of the driver coupling half (Y).
2. Rotate the indicator to the bottom-center position (6 o'clock).
3. Record the indicator reading.

When the reading value is...	Then...
Negative	The coupling halves are farther apart at the bottom than at the top. Perform one of these steps: • Add shims in order to raise the feet of the driver at the shaft end. • Remove shims in order to lower the feet of the driver at the other end.
Positive	The coupling halves are closer at the bottom than at the top. Perform one of these steps: • Remove shims in order to lower the feet of the driver at the shaft end. • Add shims in order to raise the feet of the driver at the other end.

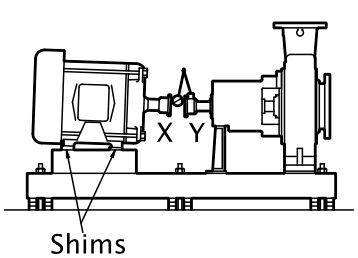

Figure 23: Side view of an incorrect vertical alignment

4. Repeat the previous steps until the permitted reading value is achieved.

Perform angular alignment for a horizontal correction

1. Set the angular alignment indicator (A) to zero on left side of the driver coupling half (Y), 90° from the top-center position (9 o'clock).
2. Rotate the indicator through the top-center position to the right side, 180° from the start position (3 o'clock).
3. Record the indicator reading.

When the reading value is...	Then...
Negative	The coupling halves are farther apart on the right side than the left. Perform one of these steps: • Slide the shaft end of the driver to the left. • Slide the opposite end to the right.
Positive	The coupling halves are closer together on the right side than the left. Perform one of these steps: • Slide the shaft end of the driver to the right. • Slide the opposite end to the left.

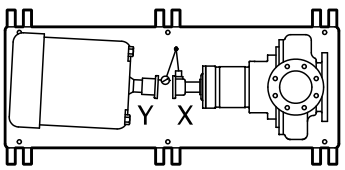

Figure 24: Top view of an incorrect horizontal alignment

4. Repeat the previous steps until the permitted reading value is achieved.

Perform parallel alignment for a vertical correction

Refer to the alignment table in "Permitted indicator values for alignment checks" (see Table of Contents for location of table) for the proper cold alignment value based on the motor temperature rise and the pump operating temperature.

Before you start this procedure, make sure that the dial indicators are correctly set up.

A unit is in parallel alignment when the parallel indicator (P) does not vary by more than 0.002 in. (0.05 mm) as measured at four points 90° apart at the operating temperature.

1. Set the parallel alignment indicator (P) to zero at the top-center position (12 o'clock) of the driver coupling half (Y).
2. Rotate the indicator to the bottom-center position (6 o'clock).
3. Record the indicator reading.

When the reading value is...	Then...
Negative	The pump coupling half (X) is lower than the driver coupling half (Y). Remove shims of a thickness equal to half of the indicator reading value under each driver foot.
Positive	The pump coupling half (X) is higher than the driver coupling half (Y). Add shims of a thickness equal to half of the indicator reading value to each driver foot.

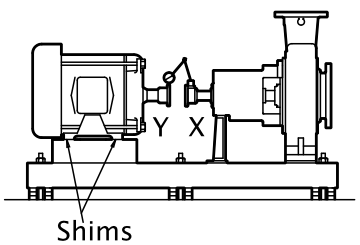

Figure 25: Side view of an incorrect vertical alignment

4. Repeat the previous steps until the permitted reading value is achieved.

NOTICE:
The specified permitted reading values are valid only at operating temperature. For cold settings, other values are permitted. You must use the correct tolerances. Failure to do so can result in misalignment and reduced pump reliability.

Perform parallel alignment for a horizontal correction

A unit is in parallel alignment when the parallel indicator (P) does not vary by more than 0.002 in. (0.05 mm) as measured at four points 90° apart at the operating temperature.

1. Set the parallel alignment indicator (P) to zero on the left side of the driver coupling half (Y), 90° from the top-center position (9 o'clock).
2. Rotate the indicator through the top-center position to the right side, 180° from the start position (3 o'clock).
3. Record the indicator reading.

When the reading value is...	Then...
Negative	The driver coupling half (Y) is to the left of the pump coupling half (X).
Positive	The driver coupling half (Y) is to the right of the pump coupling half (X).

4. Slide the driver carefully in the appropriate direction.

NOTICE: Make sure to slide the driver evenly. Failure to do so can negatively affect horizontal angular correction.

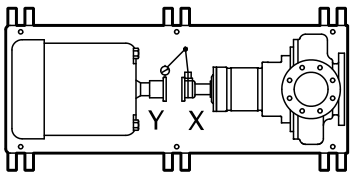

Figure 26: Top view of an incorrect horizontal alignment

5. Repeat the previous steps until the permitted reading value is achieved.

NOTICE:
The specified permitted reading values are valid only at operating temperature. For cold settings, other values are permitted. You must use the correct tolerances. Failure to do so can result in misalignment and reduced pump reliability.

Perform complete alignment for a vertical correction

A unit is in complete alignment when both the angular indicator (A) and the parallel indicator (P) do not vary by more than 0.05 mm | 0.002 in. as measured at four points 90° apart.

1. Set the angular and parallel dial indicators to zero at the top-center position (12 o'clock) of the driver coupling half (Y).
2. Rotate the indicators to the bottom-center position (6 o'clock).
3. Record the indicator readings.
4. Make corrections according to the separate instructions for angular and parallel alignment until you obtain the permitted reading values.

Perform complete alignment for a horizontal correction

A unit is in complete alignment when both the angular indicator (A) and the parallel indicator (P) do not vary by more than 0.05 mm | 0.002 in. as measured at four points 90° apart.

1. Set the angular and parallel dial indicators to zero at the left side of the driver coupling half (Y), 90° from the top-center position (9 o'clock).

2. Rotate the indicators through the top-center position to the right side, 180° from the start position (3 o'clock).
3. Record the indicator readings.
4. Make corrections according to the separate instructions for angular and parallel alignment until you obtain the permitted reading values.

C-face adapter

Intended use

The C-face adapter is a device that attaches the pump to the drive unit to minimize the axial and radial play between the two coupling halves.

Illustration

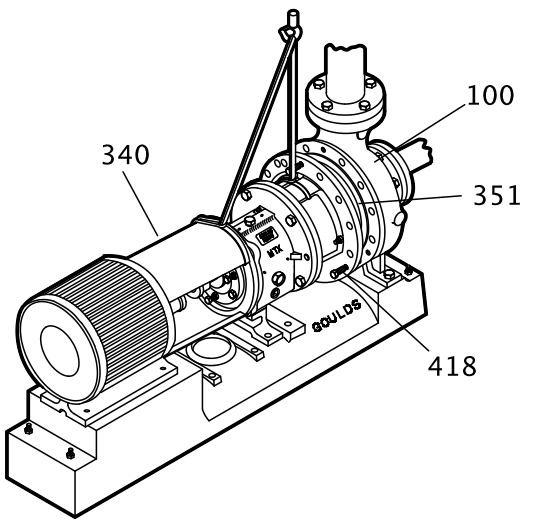

Figure 27: Example of the C-face adapter (340)

Alignment requirements

When you use a C-face adapter, you do not have to align the shaft. The rabbeted fittings of the drive unit to the adapter and the adapter to the bearing frame automatically align the shaft to within the specified limits.

Specified limits

A C-face adapter can attain a nominal alignment of 0.18mm | 0.007 in. Total Indicated Runout (T.I.R.). However, because of the stack-up of the machining tolerances of the various parts, the alignment can be as high as 0.38mm | 0.015 inches TIR.

If high reliability (with shaft alignments of less than 0.05mm | 0.002 in.) is required for the pump, use a foot-mounted drive unit on a precision-machined baseplate and perform a conventional alignment.

Grout the baseplate

Required equipment:

- Cleaners: Do not use an oil-based cleaner because the grout will not bond to it. See the instructions provided by the grout manufacturer.
- Grout: Non-shrink grout is recommended.

1. Clean all the areas of the baseplate that will come into contact with the grout.
2. Build a dam around the foundation.
3. Thoroughly wet the foundation that will come into contact with the grout.
4. Pour grout through the grout hole into the baseplate up to the level of the dam.

When you pour the grout, remove air bubbles from it by using one of these methods:

- Puddle with a vibrator.
- Pump the grout into place.

5. Allow the grout to set.

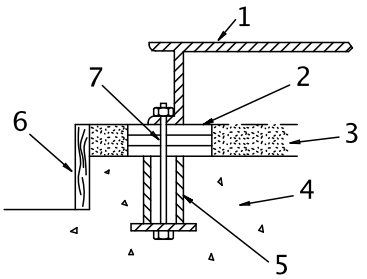

1. Baseplate
2. Shims or wedges
3. Grout
4. Foundation
5. Sleeve
6. Dam
7. Bolt

Figure 28: Pour grout into baseplate

6. Fill the remainder of the baseplate with grout, and allow the grout to set for at least 48 hours.

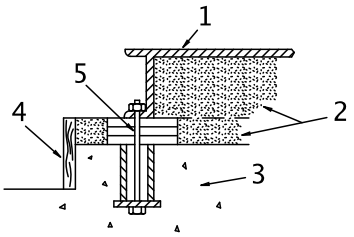

1. Baseplate
2. Grout
3. Foundation
4. Dam
5. Bolt

Figure 29: Fill remainder of baseplate with grout

7. Tighten the foundation bolts.

Piping checklists

General piping checklist

Precautions

CAUTION:

- Never draw piping into place by using force at the flanged connections of the pump. This can impose dangerous strains on the unit and cause misalignment between the pump and driver. Pipe strain adversely affects the operation of the pump, which results in physical injury and damage to the equipment.
- Vary the capacity with the regulating valve in the discharge line. Never throttle the flow from the suction side. This action can result in decreased performance, unexpected heat generation, and equipment damage.

Piping guidelines

Guidelines for piping are given in the Hydraulic Institute Standards available from the Hydraulic Institute at 9 Sylvan Way, Parsippany, NJ 07054-3802. You must review this document before you install the pump.

Checklist

Check	Explanation/comment	Checked
Check that all piping is supported independently of, and lined up naturally with, the pump flange.	This helps to prevent: • Strain on the pump • Misalignment between the pump and the drive unit • Wear on the pump bearings and the coupling • Wear on the pump bearings, seal, and shafting	
Keep the piping as short as possible.	This helps to minimize friction losses.	
Check that only necessary fittings are used.	This helps to minimize friction losses.	
Do not connect the piping to the pump until: • The grout for the baseplate or sub-base becomes hard. • The hold-down bolts for the pump and the driver are tightened.	—	
Make sure that all the piping joints and fittings are airtight.	This prevents air from entering the piping system or leaks that occur during operation.	
If the pump handles corrosive fluids, make sure that the piping allows you to flush out the liquid before you remove the pump.		
If the pump handles liquids at elevated temperatures, make sure that the expansion loops and joints are properly installed.	This helps to prevent misalignment due to linear expansion of the piping.	

Example: Installation for expansion

Correct	Incorrect
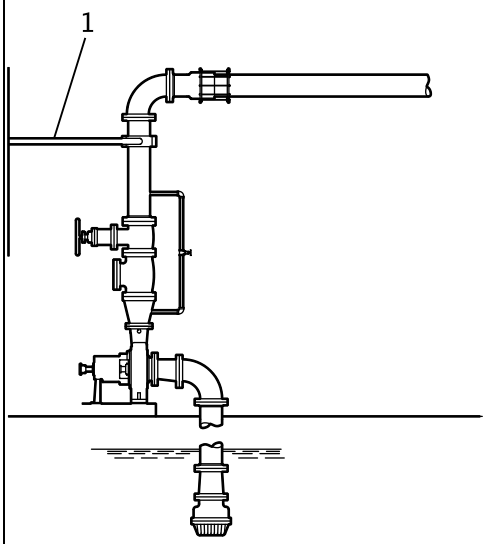 1. Expansion loop/joint	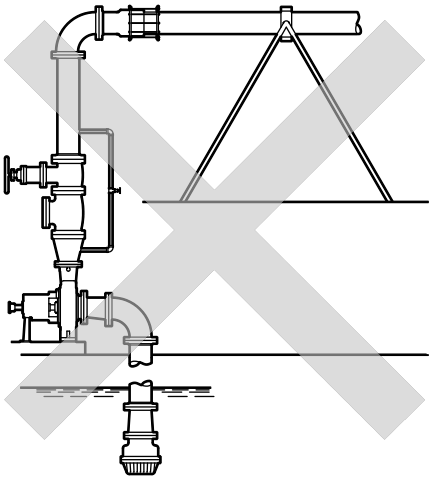

Fastening

WARNING:

- Only use fasteners of the proper size and material.
- Replace all corroded fasteners.
- Make sure that all fasteners are properly tightened and that there are no missing fasteners.

Suction-piping checklist

Performance curve reference

Net positive suction head available ($NPSH_A$) must always exceed NPSH required ($NPSH_R$) as shown on the published performance curve of the pump.

Suction-piping checks

Check	Explanation/comment	Checked
Check that the distance between the inlet flange of the pump and the closest elbow is at least five pipe diameters.	This minimizes the risk of cavitation in the suction inlet of the pump due to turbulence. See the Example sections for illustrations.	
Check that elbows in general do not have sharp bends.	See the Example sections for illustrations.	
Check that the suction piping is one or two sizes larger than the suction inlet of the pump. Install an eccentric reducer between the pump inlet and the suction piping.	The suction piping must never have a smaller diameter than the suction inlet of the pump. See the Example sections for illustrations.	
Check that the eccentric reducer at the suction flange of the pump has the following properties: • Sloping side down • Horizontal side at the top	See the example illustrations.	

Check	Explanation/comment	Checked
Suggested suction strainers are used. Check that they are at least three times the area of the suction piping. Monitor the pressure drop across the suction strainer. An increased pressure drop across the strainer of 5 psi (34.5 kPa) indicates that the strainer should be removed and cleaned. After a period of time (24 hours minimum) system flushing should be complete and the suction strainer can be removed.	Suction strainers help to prevent debris from entering the pump. Mesh holes with a minimum diameter of 1/16 in. (1.6 mm) are recommended. Liquids with specific gravity less than 0.60 a pressure drop across the suction strainer may be due to ice buildup. Ice buildup can cause turbulence, low pressure areas and pumpage vaporization.	
If more than one pump operates from the same liquid source, check that separate suction-piping lines are used for each pump.	This recommendation helps you to achieve a higher pump performance and prevent vapor locking especially with specific gravity of liquid less than 0.60.	
If necessary, make sure that the suction piping includes a drain valve and that it is correctly installed.	—	
Assure adequate insulation is applied for liquids with specific gravity less than 0.60.	To assure sufficient NPSHa.	

Liquid source below the pump

Check	Explanation/comment	Checked
Make sure that the suction piping is free from air pockets.	This helps to prevent the occurrence of air and cavitation in the pump inlet.	
Check that the suction piping slopes upwards from the liquid source to the pump inlet.	—	
If the pump is not self-priming, check that a device for priming the pump is installed.	Use a foot valve with a diameter that is at least equivalent to the diameter of the suction piping.	

Liquid source above the pump

Check	Explanation/comment	Checked
Check that an isolation valve is installed in the suction piping at a distance of at least two times the pipe diameter from the suction inlet.	This permits you to close the line during pump inspection and maintenance. Do not use the isolation valve to throttle the pump. Throttling can cause these problems: • Loss of priming • Excessive temperatures • Damage to the pump • Voiding the warranty	
Make sure that the suction piping is free from air pockets.	This helps to prevent the occurrence of air and cavitation in the pump inlet.	
Check that the piping is level or slopes downward from the liquid source.	—	
Make sure that no part of the suction piping extends below the suction flange of the pump.	—	
Make sure that the suction piping is adequately submerged below the surface of the liquid source.	This prevents air from entering the pump through a suction vortex.	

Example: Elbow close to the pump suction inlet

Correct	Incorrect
The correct distance between the inlet flange of the pump and the closest elbow must be at least five pipe diameters. 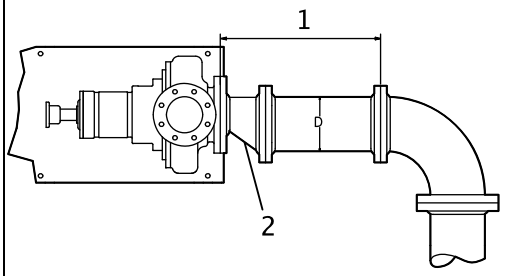 1. Enough distance to prevent cavitation 2. Eccentric reducer with a level top	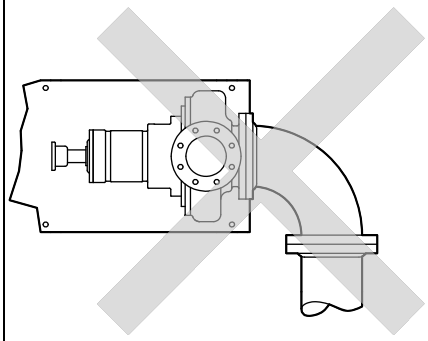

Example: Suction piping equipment

Correct	Incorrect
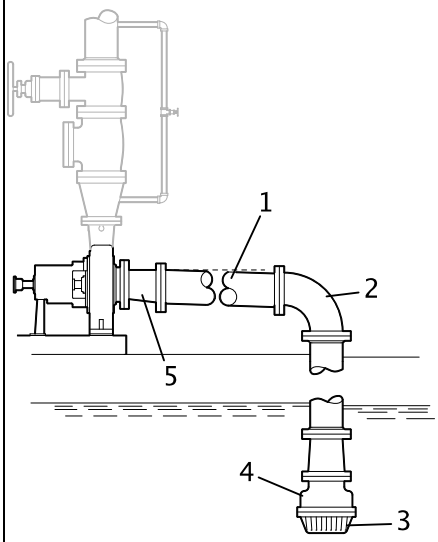 1. Suction pipe sloping upwards from liquid source 2. Long-radius elbow 3. Strainer 4. Foot valve 5. Eccentric reducer with a level top	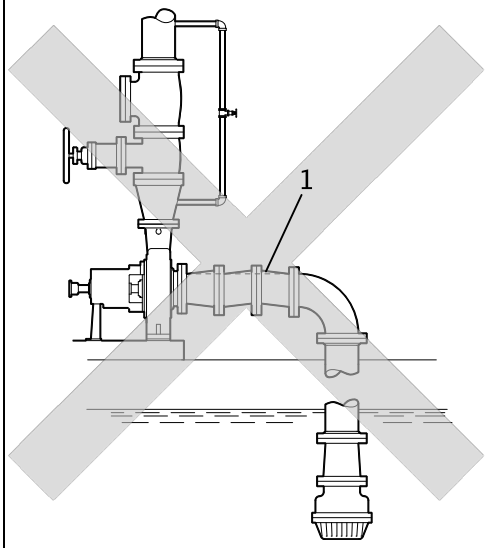 1. Air pocket, because the eccentric reducer is not used and because the suction piping does not slope gradually upward from the liquid source

Discharge piping checklist

Checklist

Check	Explanation/comment	Checked
Check that an isolation valve is installed in the discharge line. For specific gravity less than 0.60, minimize distance from pump discharge.	The isolation valve is required for: • Priming • Regulation of flow • Inspection and maintenance of the pump • Reduce risk of pumpage vaporization and vapor locking at low flow rates for low specific gravity liquids. See Example: Discharge piping equipment for illustrations.	
Check that a check valve is installed in the discharge line, between the isolation valve and the pump discharge outlet.	The location between the isolation valve and the pump allows inspection of the check valve. The check valve prevents damage to the pump and seal due to the back flow through the pump, when the drive unit is shut off. It is also used to restrain the liquid flow. See Example: Discharge piping equipment for illustrations.	
If increasers are used, check that they are installed between the pump and the check valve.	See Example: Discharge piping equipment for illustrations.	
If quick-closing valves are installed in the system, check that cushioning devices are used.	This protects the pump from surges and water hammer.	

Example: Discharge piping equipment

Correct	Incorrect
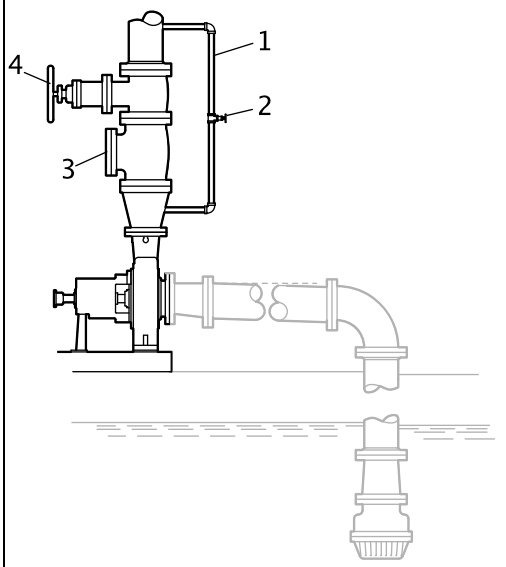	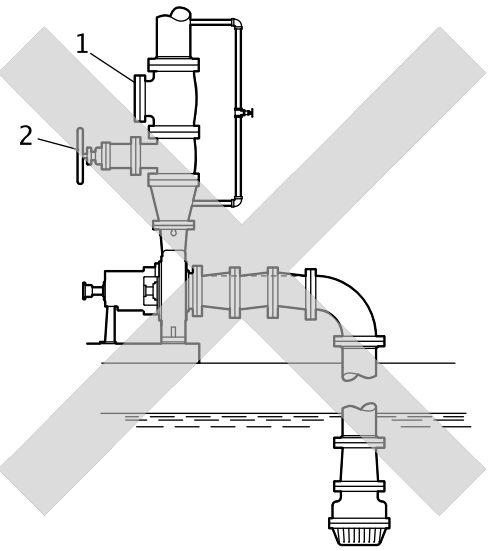
1. Bypass line 2. Shut-off valve 3. Check valve 4. Discharge isolation valve	1. Check valve (incorrect position) 2. The isolation valve should not be positioned between the check valve and the pump.

Commissioning, Startup, Operation, and Shutdown

Preparation for startup

DANGER:
Avoid death or serious injury. Explosion and/or seizure of pump can cause fire and/or burns. Never operate pump past the pressure and temperature limits shown on the nameplate on the pump.

WARNING:

- Failure to follow these precautions before you start the unit will lead to serious personal injury and equipment failure.
- Do not operate the pump below the minimum rated flows or with the suction or discharge valves closed. These conditions can create an explosive hazard due to vaporization of pumped fluid and can quickly lead to pump failure and physical injury.
- Avoid death or serious injury. Leaking fluid can cause fire and/or burns. Operating the pump above maximum rated flow shown on the pump curve leading to an increase in horsepower and vibration along with an increase in NPSHr resulting in mechanical seal and/or shaft failure and/or loss of prime.
- Avoid death or serious injury. Leaking fluid can cause fire and/or burns. Speed of pump must reach 2000 rpm for 2 pole motors and 1000 rpm for 4 pole motors within 10 seconds or an increase in vibration and rotor deflection and decrease in rotor stability leading to mechanical seal and/or shaft failure and/or pump seizure can occur.
- Never operate the pump without the coupling guard correctly installed.
- ⟨Ex⟩ Always disconnect and lock out power to the driver before you perform any installation or maintenance tasks. Failure to disconnect and lock out driver power will result in serious physical injury.
  - Electrical connections must be made by certified electricians in compliance with all international, national, state, and local rules.
  - Refer to driver/coupling/gear manufacturers installation and operation manuals (IOM) for specific instructions and recommendations.
- Operating the pump in reverse rotation can result in the contact of metal parts, heat generation, and breach of containment.
- Avoid death or serious injury. Explosion and/or seizure of pump can cause fire and/or burns. Assure balance line is installed and either piped to the pump suction or back to the suction vessel to avoid vaporization of pumped fluid.

DANGER:
Avoid death or serious injury. Leaking fluid can cause fire and/or burns. Assure all openings are sealed off prior to filling pump.

Precautions

NOTICE:

- Verify the driver settings before you start any pump.
- Make sure that the warm-up rate does not exceed 1.4°C | 2.5°F per minute.
- Risk of damage to the mechanical seal or shaft sleeve on units supplied with cartridge mechanical seals. Prior to startup, make sure to tighten the set screws in the seal locking ring and remove the centering clips.

You must follow these precautions before you start the pump:

- Flush and clean the system thoroughly to remove dirt or debris in the pipe system in order to prevent premature failure at initial startup.
- Bring variable-speed drivers to the rated speed as quickly as possible.
- Run a new or rebuilt pump at a speed that provides enough flow to flush and cool the close-running surfaces of the stuffing-box bushing.
- If temperatures of the pumped fluid will exceed 93°C | 200°F, then warm up the pump prior to operation. Circulate a small amount of fluid through the pump until the casing temperature is within 38°C | 100°F of the fluid temperature. Accomplish this by flowing fluid from pump inlet to discharge drain (optionally, the casing vent can be included in warm-up circuit but not required). Soak for (2) hours at process fluid temperature.

At initial startup, do not adjust the variable-speed drivers or check for speed governor or over-speed trip settings while the variable-speed driver is coupled to the pump. If the settings have not been verified, then uncouple the unit and refer to instructions supplied by the driver manufacturer.

Remove the coupling guard

1. Remove the nut, bolt, and washers from the slotted hole in the center of the coupling guard.
2. Slide the driver half of the coupling guard toward the pump.

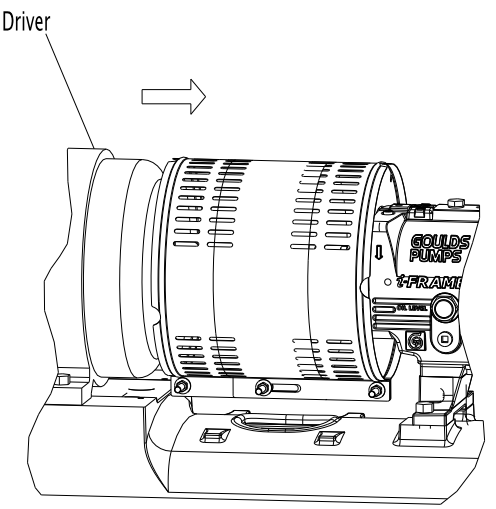

3. Remove the nut, bolt, and washers from the driver half of the coupling guard.

4. Remove the driver-side end plate.

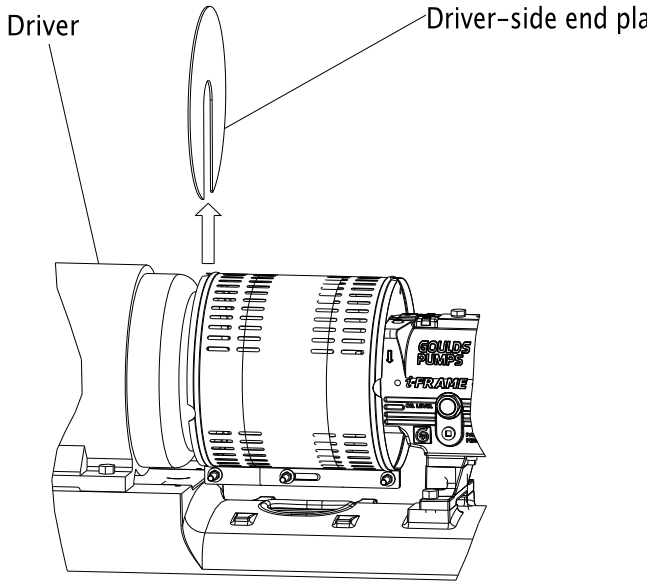

5. Remove the driver half of the coupling guard:
   a) Slightly spread the bottom apart.
   b) Lift upwards.

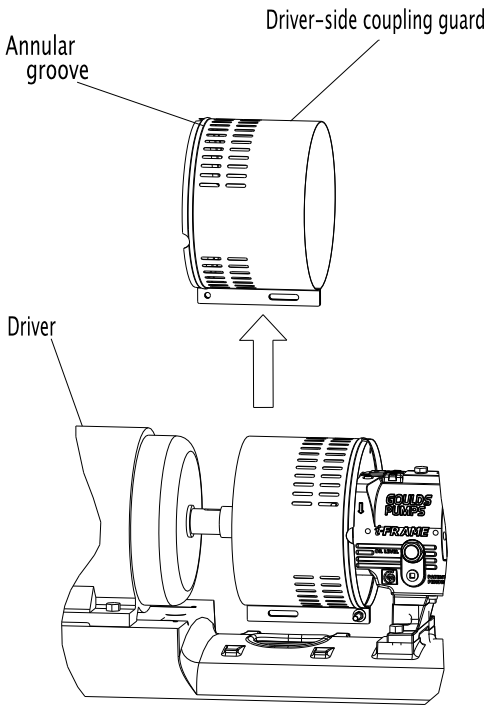

6. Remove the remaining nut, bolt, and washers from the pump half of the coupling guard.
   It is not necessary to remove the end plate from the pump side of the bearing housing. You can access the bearing-housing tap bolts without removing this end plate if maintenance of internal pump parts is necessary.
7. Remove the pump half of the coupling guard:
   a) Slightly spread the bottom apart.

b) Lift upwards.

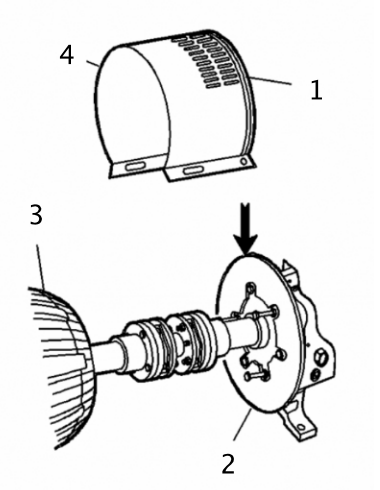

1. Annular groove
2. Pump-side end plate
3. Driver
4. Pump half of the coupling guard

Check the rotation - Frame Mounted

WARNING:

- Operating the pump in reverse rotation can result in the contact of metal parts, heat generation, and breach of containment.
- Ⓔx Always disconnect and lock out power to the driver before you perform any installation or maintenance tasks. Failure to disconnect and lock out driver power will result in serious physical injury.
  - Electrical connections must be made by certified electricians in compliance with all international, national, state, and local rules.
  - Refer to driver/coupling/gear manufacturers installation and operation manuals (IOM) for specific instructions and recommendations.

1. Lock out power to the driver.
2. Make sure that the coupling hubs are fastened securely to the shafts.
3. Make sure that the coupling spacer is removed.
   The pump ships with the coupling spacer removed.
4. Unlock power to the driver.
5. Make sure that everyone is clear, and then jog the driver long enough to determine that the direction of rotation corresponds to the arrow on the bearing housing or close-coupled frame.
6. Lock out power to the driver.

Impeller-clearance check

The impeller-clearance check ensures the following:

- The pump turns freely.
- The pump operates at optimal efficiency for long equipment life and low energy consumption.

Impeller clearances (3196 and HT 3196)

WARNING:
For pumpage temperatures greater than 93°C | 200°F, you must increase the cold (ambient) setting according to this table. Doing so prevents the impeller from contacting the casing due to differential expansion from the higher operating temperatures. Failure to do so may result in sparks, unexpected heat generation, and equipment damage.

NOTICE:
Do not set the maximum impeller setting to more than 0.13 mm | 0.005 in. greater than the values in this table. Doing so may result in a significant decrease in performance.

Table 8: Impeller clearances
This pump requires the impeller clearances in the following table.

Service temperature	STi	MTi/LTi	XLT-i/i17
	mm | in.	mm | in.	mm | in.
-29 to 93°C | -20 to 200°F	0.13 | 0.005	0.20 | 0.008	0.38 | 0.015
Up to 121°C | 250°F	0.15 | 0.006	0.22 | 0.009	0.41 | 0.016
Up to 149°C | 300°F	0.18 | 0.007	0.25 | 0.010	0.43 | 0.017
Up to 177°C| 350°F	0.22 | 0.009	0.30 | 0.012	0.48 | 0.019
Up to 204°C | 400°F	0.25 | 0.010	0.33 | 0.013	0.50 | 0.020
Up to 232°C | 450°F	0.28 | 0.011	0.35 | 0.014	0.53 | 0.021
Up to 260°C| 500°F	0.30 | 0.012	0.38 | 0.015	0.56 | 0.022
Up to 288°C | 550°F	0.33 | 0.013	0.41 | 0.016	0.58 | 0.023
Up to 316°C | 600°F	0.36 | 0.014	0.43 | 0.017	0.61 | 0.024
Up to 343°C | 650°F	0.40 | 0.016	0.48 | 0.019	0.66 | 0.026
Up to 371°C | 700°F	0.43 | 0.017	0.50 | 0.020	0.69 | 0.027

Impeller-clearance setting

Importance of a proper impeller clearance

A proper impeller clearance ensures that the pump runs at high performance.

WARNING:

- Ⓔx The impeller clearance setting procedure must be followed. Improperly setting the clearance or not following any of the proper procedures can result in sparks, unexpected heat generation, and equipment damage.
- If you use a cartridge mechanical seal, you must install the centering clips and loosen the set screws before you set the impeller clearance. Failure to do so could result in sparks, heat generation, and mechanical seal damage.

Impeller clearance methods

You can set the impeller clearance with either of these methods:

- Dial indicator method
- Feeler gauge method

Set the impeller clearance - dial indicator method (all except CV 3196)

WARNING:

Ⓔx Always disconnect and lock out power to the driver before you perform any installation or maintenance tasks. Failure to disconnect and lock out driver power will result in serious physical injury.

- Electrical connections must be made by certified electricians in compliance with all international, national, state, and local rules.
- Refer to driver/coupling/gear manufacturers installation and operation manuals (IOM) for specific instructions and recommendations.

1. Remove the coupling guard.
2. Set the indicator so that the button contacts either the shaft end or the face of the coupling.

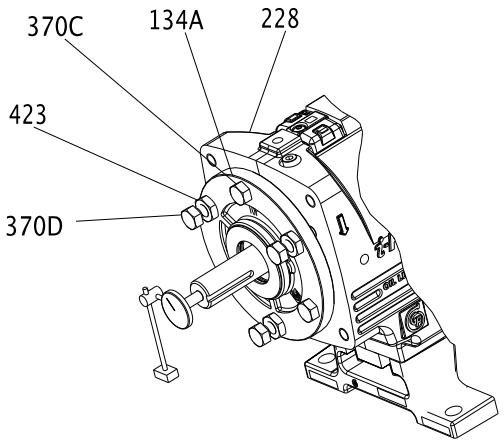

Figure 30: Dial indicator setting

3. Loosen the jam nuts (423) on the jack bolts (370D) , and then back the bolts out about two turns.
4. Tighten the locking bolts evenly (370C), bringing the bearing housing (134A) towards the frame (228) until the impeller contacts the casing.
5. Turn the shaft to ensure that there is contact between the impeller and the casing.
6. Set the indicator to zero and loosen the locking bolt (370C) about one turn.
7. Thread in the jack bolts (370D) until the jack bolts evenly contact the bearing frame.
8. Tighten the jack bolts evenly about one flat at a time, moving the bearing housing (134A) away from the bearing frame until the indicator shows the correct clearance.
   Refer to the impeller clearance table to determine the correct clearance.
9. Tighten the bolts evenly in this order:
   a) Tighten the locking bolts (370C).
   b) Tighten the jack bolts (370D).
   Make sure to keep the indicator reading at the proper setting.
10. Make sure the shaft turns freely.

Set the impeller clearance - feeler gauge method (all except CV 3196)

WARNING:

Ⓔx Always disconnect and lock out power to the driver before you perform any installation or maintenance tasks. Failure to disconnect and lock out driver power will result in serious physical injury.

- Electrical connections must be made by certified electricians in compliance with all international, national, state, and local rules.
- Refer to driver/coupling/gear manufacturers installation and operation manuals (IOM) for specific instructions and recommendations.

1. Lock out the driver power and remove the coupling guard.
2. Loosen the jam nuts (423B) on the jack bolts (371A), and then back the bolts out about two turns.

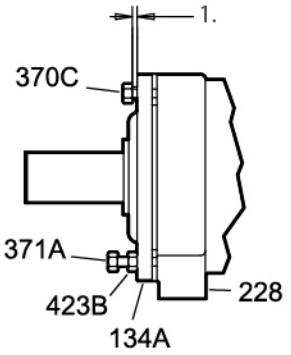

Figure 31: Loosen jam nuts

1. See impeller clearance table for distance

3. Evenly tighten the locking bolts (370C), bringing the bearing housing (134A) towards the frame (228) until the impeller contacts the casing.
4. Turn the shaft to ensure that there is contact between the impeller and the casing.
5. Use a feeler gauge to set the gap between the three locking bolts (370C) and the bearing housing (134A) to the correct impeller clearance.
   Refer to the impeller clearance table to determine the correct clearance.
6. Use the three jack bolts (370D) to evenly loosen the bearing housing (134A) until it contacts the locking bolts (370C).
7. Evenly tighten the jam nuts (423B).
8. Make sure the shaft turns freely.

Couple the pump and driver

WARNING:

Ⓔx Always disconnect and lock out power to the driver before you perform any installation or maintenance tasks. Failure to disconnect and lock out driver power will result in serious physical injury.

- Electrical connections must be made by certified electricians in compliance with all international, national, state, and local rules.
- Refer to driver/coupling/gear manufacturers installation and operation manuals (IOM) for specific instructions and recommendations.

Couplings must have proper certification to be used in an ATEX classified environment. Use the instructions from the coupling manufacturer in order to lubricate and install the coupling. Refer to driver/coupling/gear manufacturers IOM for specific instructions and recommendations.

Install the coupling guard

WARNING:

- Never operate a pump without a properly installed coupling guard. Personal injury will occur if you run the pump without a coupling guard.
- Electrical Connections must be made by certified electricians in compliance with all international, national, state, and local rules.
- Refer to driver/coupling/gear manufacturers IOM for specific instructions and recommendations.
- Ⓔx Always disconnect and lock out power to the driver before you perform any installation or maintenance tasks. Failure to disconnect and lock out driver power will result in serious physical injury.
  - Electrical connections must be made by certified electricians in compliance with all international, national, state, and local rules.
  - Refer to driver/coupling/gear manufacturers installation and operation manuals (IOM) for specific instructions and recommendations.
- The coupling used in an Ex-classified environment must be properly certified and must be constructed from a non-sparking material.
-

Required parts:

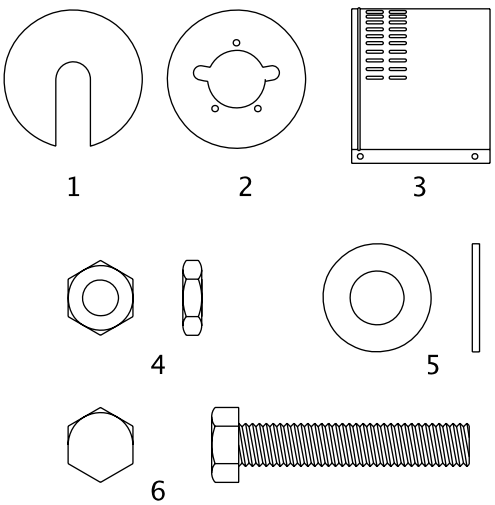

1. End plate, drive end
2. End plate, pump end
3. Guard half, 2 required
4. 3/8-16 nut, 3 required
5. 3/8 in. washer
6. 3/8-16 x 2 in. hex head bolt, 3 required

Figure 32: Required parts

1. De-energize the motor, place the motor in a locked-out position, and place a caution tag at the starter that indicates the disconnect.
2. Put the pump-side end plate in place.
   If the pump-side end plate is already in place, make any necessary coupling adjustments and then proceed to the next step.

If the pump size is...	Then...
STi, MTi, LTi	Align the pump-side end plate to the bearing frame. You do not need to adjust the impeller.

If the pump size is...	Then...
XLT-i	1. Align the end plate on the pump side to the bearing housing so that you meet these conditions: 1. The large slots on the end plate do not touch the bearing housing tap bolts. 2. The small slots align with the impeller adjusting bolts. 2. Fasten the end plate to the bearing housing using the jam nuts on the impeller adjusting bolts. 3. Check the impeller clearance. Refer to the impeller clearance table for the correct impeller clearance.

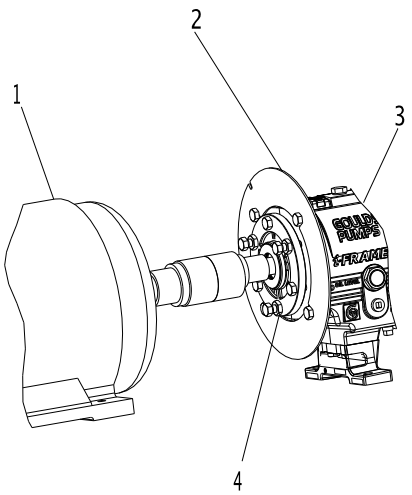

1. Driver
2. Pump end plate
3. Bearing housing
4. Jam nut

Figure 33: Pump-side end plate placement

3. Put the pump-half of the coupling guard in place:
   a) Slightly spread the bottom apart.
   b) Place the coupling guard half over the pump-side end plate.

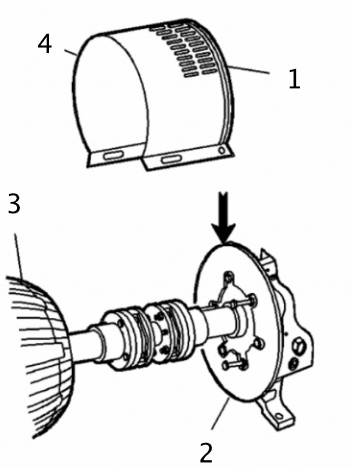

1. Annular groove
2. Pump-side end plate
3. Driver
4. Pump half of the coupling guard

Figure 34: Guard half installation

The annular groove in the coupling guard half must fit around the end plate.

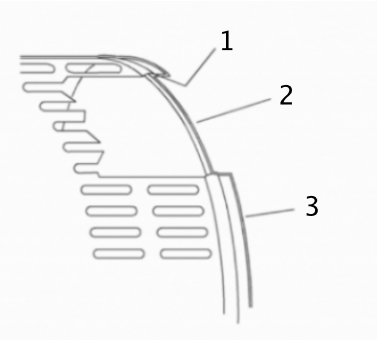

1. Annular groove
2. End plate (pump end)
3. Guard half

Figure 35: Annular groove in coupling guard

4. Use a bolt, a nut, and two washers to secure the coupling guard half to the end plate. Tighten securely.

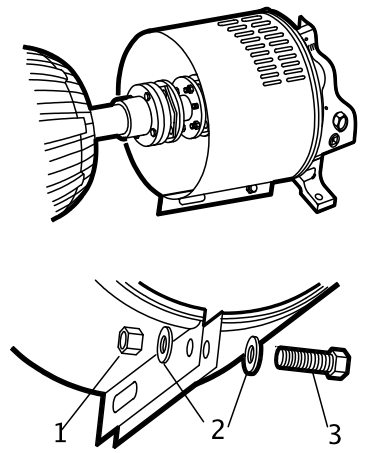

1. Nut
2. Washer
3. Bolt

Figure 36: Secure coupling guard half to end plate

5. Put the driver half of the coupling guard in place:
   a) Slightly spread the bottom apart.

b) Place the driver half of the coupling guard over the pump half of the coupling guard. The annular groove in the coupling guard half must face the motor.

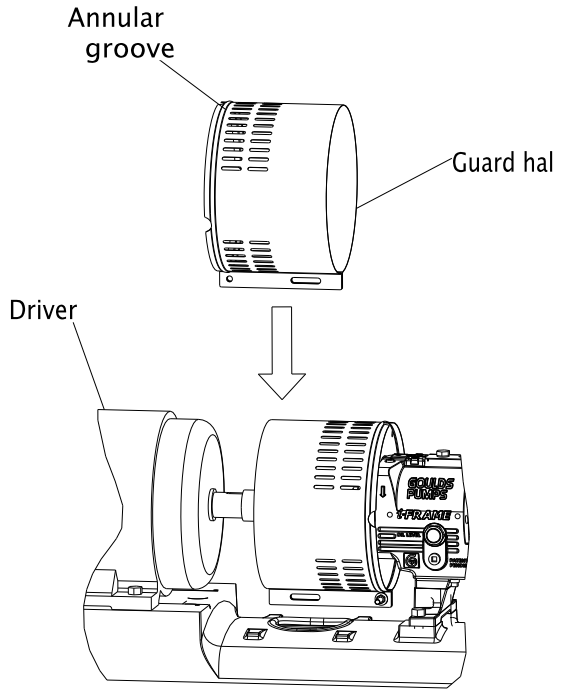

Figure 37: Placement of driver half of coupling guard

6. Place the driver-side end plate over the motor shaft.

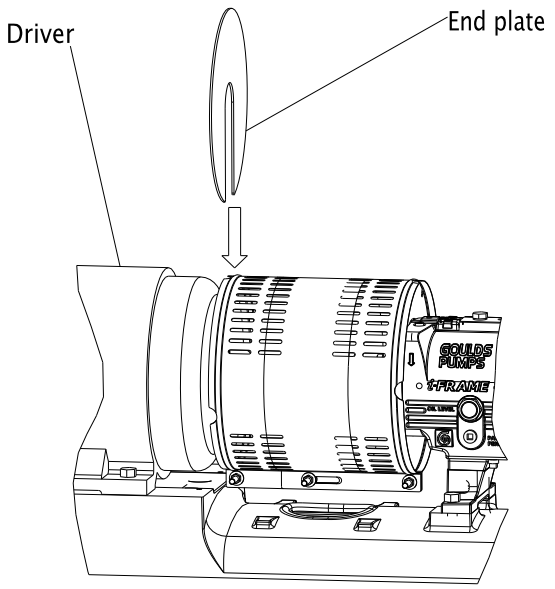

Figure 38: Placement of driver half of coupling guard

7. Place the driver-side end plate in the annular groove of the driver-half of the coupling guard.
8. Use a bolt, a nut, and two washers to secure the coupling guard half to the end plate. Hand-tighten only.
   The hole is located on the driver-side of the coupling guard half.

9. Slide the driver-half of the coupling guard towards the motor so that the coupling guard completely covers the shafts and coupling.

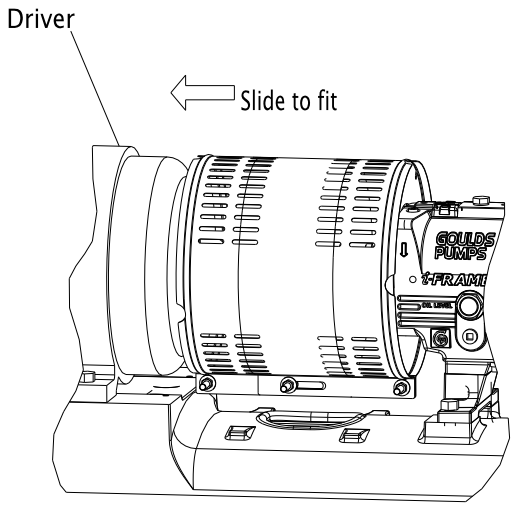

Figure 39: Slide driver-half of coupling guard towards motor

10. Use a nut, a bolt, and two washers to secure the coupling guard halves together.
11. Tighten all nuts on the guard assembly.

WARNING:
Never operate the pump without the coupling guard correctly installed.

Bearing lubrication

WARNING:
Ⓔx Make sure to properly lubricate the bearings. Failure to do so can result in excess heat generation, sparks, and premature failure.

NOTICE: Be certain to check the greasing on a pump that has been out of service for a long period of time and re-grease if necessary.

Pumps are shipped without oil. You must lubricate oil-lubricated bearings at the job site.

Grease-lubricated bearings are lubricated at the factory.

The bearing manufacturer fills greased-for-life bearings with grease and seals them at the factory. You do not need to lubricate or seal these bearings.

Oil volumes

Oil volume requirements

This table shows the required amount of oil for oil-lubricated bearings.

Frame	ml	Qts.	Oz.
STi	400	0.5	16
MTi	1400	1.5	47
LTi	1400	1.5	48
XLT-i and i17	3000	3	96

Lubricating-oil requirements

Oil requirements based on temperature

For the majority of operating conditions, bearing temperatures run between 49°C | 120°F and 82°C | 180°F, and you can use an oil of ISO viscosity grade 68 at 38°C | 100°F. If temperatures exceed 82°C | 180°F, refer to the table for temperature requirements.

Temperature	Oil requirement
Bearing temperatures exceed 82°C | 180°F	Use ISO viscosity grade 100 with bearing-frame cooling or finned-tube oil cooler. The finned-tube oil cooler is standard with the HT 3196 model and optional for all other models.
Pumped-fluid temperatures exceed 177°C | 350°F	Use synthetic lubrication.

Acceptable oil for lubricating bearings

Acceptable lubricants

Examples of acceptable high quality turbine oils with rust and oxidation inhibitors.

Brand	Lubricant type
Chevron	GTS Oil 68
Exxon	Teresstic EP 68
Mobil	DTE 26 300 SSU @ 38°C | 100°F
Philips	Mangus Oil 315
Shell	Tellus Oil 68
Sunoco	Sunvis 968
Royal Purple	SYNFILM ISO VG 68 Synthetic Lube

Examples of acceptable synthetic lubricants.

Brand	Lubricant type
Castrol	Hyspin R&O 220
Chevron	GST 220
Exxon	Teresstic 220
Mobil	DTE Oil BB SHC 630
Shell	Marlina 220 Tellus 220
Sunoco	Sunvis 9220
Texaco	Regal R&O 220 Rando HD 220
Royal Purple	Synfilm GT 220 Synergy 220

Lubricate the bearings with oil

Use a high-quality turbine oil with rust and oxidation inhibitors.

1. Remove the fill plug.
2. Fill the bearing frame with oil through the filler connection, which is located on top of the bearing frame.

Fill the bearing frame with oil until the oil level reaches the middle of the sight glass (319). The correct volume of oil required for each size of bearing frame can be found in the ‘Oil Volume Requirements’ section in the ‘Bearing Maintenance’ / ‘Maintenance’ portion of the IOM.

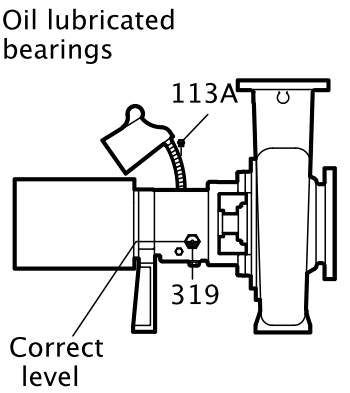

Figure 40: Oil filler connection

3. Replace the fill plug.

Lubricate the bearings with pure oil mist

Oil mist is an optional feature for this pump.
To lubricate bearings with pure oil mist, follow the instructions provided by the manufacturer of the oil-mist generator.
The inlet connections are on the top of the bearing frame.

Greased-for-life bearing lubrication

The bearing manufacturer fills greased-for-life bearings with grease and seals them at the factory. You do not need to lubricate or seal these bearings. Refer to the Maintenance chapter for re-greasing and maintenance procedures for these bearings.

Shaft-sealing options

In most cases, the manufacturer seals the shaft before shipping the pump. If your pump does not have a sealed shaft, see the Shaft-seal maintenance section in the Maintenance chapter.
This model uses these types of shaft seals:

- Cartridge mechanical seal
- Conventional inside-component mechanical seal
- Conventional outside-component mechanical seal
- Dynamic seal
- Packed-stuffing-box option

Mechanical seal options

Pumps are usually shipped with mechanical seals installed. If they are not, then refer to the mechanical seal manufacturer's installation instructions.
These are the mechanical seal options for this pump:

- Cartridge mechanical seal
- Conventional inside component mechanical seal
- Conventional outside component mechanical seal

Connection of sealing liquid for mechanical seals

Seal lubrication is required

Seal faces must have liquid film between them for proper lubrication. Locate the taps using the illustrations shipped with the seal.

Seal flushing methods

You can use these methods in order to flush or cool the seal:

Method	Description
Product flush	Run the piping so that the pump pushes the pumped fluid from the casing and injects it into the seal gland. If necessary, an external heat exchanger cools the pumped fluid before it enters the seal gland.
External flush	Run the piping so that the pump injects a clean, cool, compatible liquid directly into the seal gland. The pressure of the flushing liquid must be 0.35 to 1.01 kg/cm^2 | 5 to 15 psi greater than the seal chamber pressure. The injection rate must be 2 to 8 lpm | 0.5 to 2 gpm.
Other	You can use other methods that employ multiple gland or seal chamber connections. Refer to the mechanical seal reference drawing and piping diagrams.

Packed stuffing box option

WARNING:
Ⓔx Packed stuffing boxes are not allowed in an ATEX-classified environment.

The factory does not install the packing, lantern ring, or split gland.
These parts are included with the pump in the box of fittings. Before you start the pump, you must install the packing, lantern ring, and split gland according to the Packed stuffing box maintenance section in the Maintenance chapter.

Connection of sealing liquid for a packed stuffing box

WARNING:
Ⓔx Packed stuffing boxes are not allowed in an ATEX-classified environment.

NOTICE:
Make sure to lubricate the packing. Failure to do so may result in shortening the life of the packing and the pump.

You must use an external sealing liquid under these conditions:

- The pumped fluid includes abrasive particles.
- The stuffing-box pressure is below atmospheric pressure when the pump is running with a suction lift or when the suction source is in a vacuum. Under these conditions, packing is not cooled and lubricated and air is drawn into pump.

Conditions for application of an external liquid

Condition	Action
The stuffing box pressure is above atmospheric pressure and the pumped fluid is clean.	Normal gland leaks of 40 to 60 drops per minute is usually sufficient to lubricate and cool the packing. You do not need sealing liquid.
The stuffing box pressure is below atmospheric pressure or the pumped fluid is not clean.	An outside source of clean compatible liquid is required.
An outside source of clean compatible liquid is required.	You must connect the piping to the lantern ring connection with a 40 to 60 drops-per-minute leak rate. The pressure must be 1.01 kg/cm^2 | 15 psi above the stuffing box pressure.

Dynamic-seal option

WARNING:
Ⓔx Dynamic seals are not allowed in an ATEX-classified environment.

The dynamic seal consists of two parts:

- Repeller seal
- Secondary seal (one of the following):
  - Graphite packing
  - Elastomenic face seal

Table 9: Dynamic seal part function

Part	Function
Repeller seal	A repeller seal prevents liquid from entering the stuffing box during operation. The repeller normally does not require a flush. However, for services that allow a build-up of solids on the repeller, you must install a flush connection. If a danger of freezing exists, then you must install a drain connection to drain the repeller chamber.

Secondary seal (graphite packing)	This secondary seal prevents leaks during pump shutdown and is comprised of the following:
	• Graphite packing – Graphite packing provides adequate life running dry but can provide longer performance if lubricated with clean water or grease.
	  • If you lubricate with clean water, then the repeller reduces both the quantity and pressure of seal water that is necessary. If the suction head is less than the repeller capability, then the stuffing box pressure is the same as the atmospheric pressure. Water pressure for the seal must be high enough to overcome static head when the pump is not operating to keep pumped fluid out of the packing. There must be enough flow to cool the packing.
	  • If you lubricate with grease, then you must use spring-loaded grease lubricators to maintain a constant supply.
	• Elastomeric face seal – The elastomeric face seal consists of an elastomer rotary fitted to the shaft and a ceramic stationary seat fitted in the gland. To set an elastomeric face seal, refer to Set an elastomeric face seal. This seal is designed to run dry, so no flush is necessary.

Set an elastomeric face seal

This procedure ensures that the elastomeric seal attains proper contact. No other adjustments are necessary.

1. Remove the gland nuts.
2. Slide the gland back on the sleeve.
3. Pull the rotary back on the sleeve until the rotary is about 25 mm | 1 in. beyond the stuffing box face.
4. Push the gland back onto the studs, pushing the rotary back along the sleeve.
5. Tighten the gland nuts.

Pump priming

Prime the pump with the suction supply above the pump

1. Slowly open the suction isolation valve.
2. Open the air vents on the suction and discharge piping until the pumped fluid flows out.
3. Close the air vents.

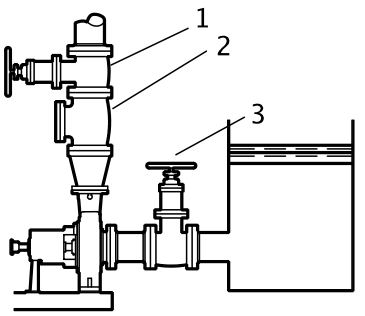

1. Discharge isolation valve
2. Check valve
3. Suction isolation valve

Figure 41: Suction supply above pump

Prime the pump with the suction supply below the pump

Use a foot valve and an outside source of liquid in order to prime the pump. The liquid can come from one of these sources:

- A priming pump
- A pressurized discharge line
- Another outside supply

1. Close the discharge isolation valve.
2. Open the air vent valves in the casing.
3. Open the valve in the outside supply line until only liquid escapes from the vent valves.
4. Close the vent valves.
5. Close the outside supply line.

This illustration is an example of priming the pump with a foot valve and an outside supply:

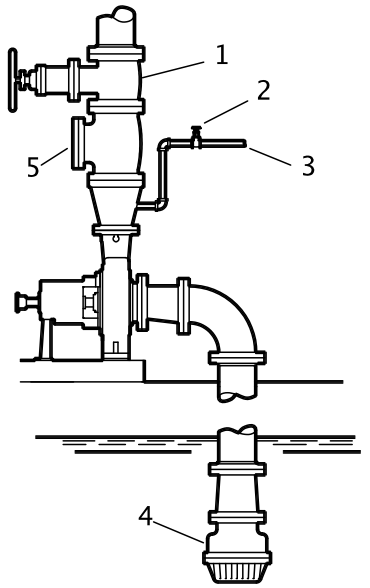

1. Discharge isolation valve
2. Shutoff valve
3. From outside supply
4. Foot valve
5. Check valve

Figure 42: Pump priming with suction supply below pump

This illustration is an example of priming the pump with a foot valve using a bypass around the check valve:

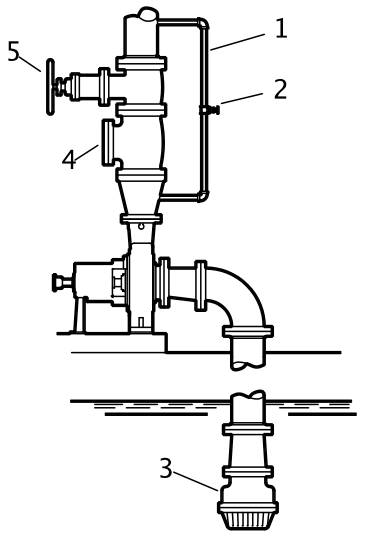

1. By-pass line
2. Shutoff valve
3. Foot valve
4. Check valve
5. Discharge isolation valve

Figure 43: Pump priming with suction supply below pump with foot valve using bypass around check valve

Other methods of priming the pump

You can also use these methods in order to prime the pump:

- Prime by ejector
- Prime by automatic priming pump

Start the pump

WARNING: Immediately observe the pressure gauges. If discharge pressure is not quickly attained, stop the driver immediately, reprime, and attempt to restart the pump.

CAUTION:

- Immediately observe the pressure gauges. If discharge pressure is not quickly attained, stop the driver, reprime, and attempt to restart the pump.
- Observe the pump for vibration levels, bearing temperature, and excessive noise. If normal levels are exceeded, shut down the pump and resolve the issue.
- On pure or purge-oil mist-lubricated units, remove the viewing port plugs to verify that oil mist flowing properly. Replace the plugs.
- On frame mounted units, ensure that the oil level is correct prior to starting pump. Close coupled pumps do not have oil lubricated bearings.
- Ensure all flush and cooling systems are operating correctly prior to starting pump.

Before you start the pump, you must perform these tasks:

- Open the suction valve.
- Open any recirculation or cooling lines.

1. Fully close or partially open the discharge valve, depending on system conditions.
2. Start the driver.
3. Slowly open the discharge valve until the pump reaches the desired flow.
4. Immediately check the pressure gauge to ensure that the pump quickly reaches the correct discharge pressure.
5. If the pump fails to reach the correct pressure, perform these steps:
   a) Stop the driver.
   b) Prime the pump again.
   c) Restart the driver.
6. Monitor the pump while it is operating:
   a) Check the pump for bearing temperature, excessive vibration, and noise.
   b) If the pump exceeds normal levels, then shut down the pump immediately and correct the problem.
   A pump can exceed normal levels for several reasons. See Troubleshooting for information about possible solutions to this problem.
7. Repeat steps 5 and 6 until the pump runs properly.

Activate the i-*ALERT*® Condition Monitor

WARNING:
Never heat the condition monitor to temperatures in excess of 100°C | 212°F. Heating to these temperatures could result in death or serious injury.

CAUTION:
Always wear protective gloves. The pump and condition monitor can be hot.

By using the i-*ALERT*® Condition monitor or the i-*ALERT*®*2* Bluetooth Equipment Health Monitor, you agree to be bound by the Terms and Conditions of the *Software License Agreement* (page 18)

The condition monitor is ready for activation when the pump is running and has reached a steady flow, pressure, and temperature. This process only takes a few minutes.

1. Place a small magnet on the condition monitor over the ITT logo and then remove it, as this example shows.

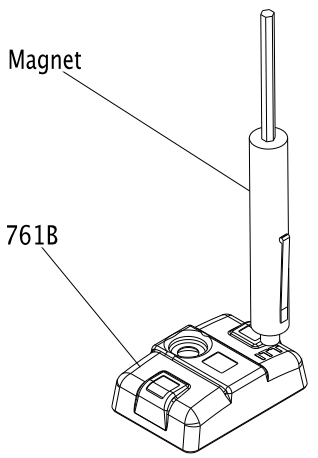

Figure 44: i-*ALERT*® condition monitor

When the condition monitor is activated it:

1. Displays a series of red LEDs followed by a solid green LED.
2. Collects eight samples that are spaced one second apart.
3. Averages these readings to establish the baseline vibration level.
4. Flashes a green LED after approximately twelve seconds.

For the first ten minutes, the green LED flashes every second for five consecutive flashes and then pauses to take a vibration reading. More frequent measurements (every six seconds) are taken in this startup period so that an alarm can be immediately detected.

i-*ALERT*® Condition Monitor routine operation

To install and/or activate the i-*ALERT*®*2* monitor, please refer to the i-*ALERT*®*2* IOM or *http://www.ittproservices.com/aftermarket-products/monitoring/i-alert2/* (page) (i-ALERT2.com). Routine operation instructions are also included in the i-*ALERT*®*2* IOM.

Measurement interval

This table shows the measurement intervals for the condition monitor during normal operation and when the monitor is in alarm mode.

Mode	Measurement interval
Normal operating mode	Five minutes
Alarm mode	Two minutes

When the condition monitor measures a reading beyond the specified temperature and vibration limits, the appropriate red LED flashes. After the process or pump condition that causes the alarm is corrected, the condition monitor returns to normal mode after one normal-level measurement.

Alarm mode

When the condition monitor is in alarm mode, you should investigate the cause of the condition and make necessary corrections in a timely manner.

Magnetic device considerations

Be careful when you use magnetic devices in close proximity of the condition monitor, such as magnetic vibration-monitoring probes or dial indicators. These magnetic devices can accidentally activate or deactivate the condition monitor resulting in improper alarm levels or loss of monitoring.

Pump operation precautions

General considerations

CAUTION:

- Vary the capacity with the regulating valve in the discharge line. Never throttle the flow from the suction side since this can result in decreased performance, unexpected heat generation, and equipment damage.
  Do not overload the driver. Driver overload can result in unexpected heat generation and equipment damage. The driver can overload in these circumstances:
  - The specific gravity of the pumped fluid is greater than expected.
  - The pumped fluid exceeds the rated flow rate.
- Do not operate pump past the maximum flow. For maximum flow refer to the pump performance curve.
- Do not overload the driver. Driver overload can result in unexpected heat generation and equipment damage. The driver can overload in these circumstances:
  - The specific gravity of the pumped fluid is greater than expected.
  - The pumped fluid exceeds the rated flow rate.
- Do not operate pump below hydraulic or thermal minimum flow. For hydraulic minimum flows refer to technical manual and pump performance curve. To calculate thermal minimum flow, refer to HI Centrifugal Pumps for Design and Application ANSI/HI 1.3-2000.
- Make sure to operate the pump at or near the rated conditions. Failure to do so can result in pump damage from cavitation or recirculation.

Operation at reduced capacity

WARNING:
Never operate any pumping system with a blocked suction and discharge. Operation, even for a brief period under these conditions, can cause confined pumped fluid to overheat, which results in a violent explosion. You must take all necessary measures to avoid this condition. If pump becomes plugged shut down and unplug prior to restarting pump.

CAUTION:

- The pump and system must be free of foreign objects. If pump becomes plugged, shut down and unplug prior to restarting pump.
- Avoid excessive vibration levels. Excessive vibration levels can damage the bearings, stuffing box or seal chamber, and the mechanical seal, which can result in decreased performance.
- Avoid increased radial load. Failure to do so can cause stress on the shaft and bearings.
- Avoid heat build-up. Failure to do so can cause rotating parts to score or seize.
- Avoid cavitation. Failure to do so can cause damage to the internal surfaces of the pump.

Operation under freezing conditions

NOTICE:
Do not expose an idle pump to freezing conditions. Drain all liquid that is inside the pump and the cooling coils. Failure to do so can cause liquid to freeze and damage the pump.

Shut down the pump

WARNING:
The pump can handle hazardous and toxic fluids. Identify the contents of the pump and observe proper decontamination procedures in order to eliminate the possible exposure to any hazardous or toxic fluids. Wear the proper personal protective equipment. Potential hazards include, but are not limited to, high temperature, flammable, acidic, caustic, explosive, and other risks. You must handle and dispose of pumped fluid in compliance with the applicable environmental regulations.

1. Slowly close the discharge valve.
2. Shut down and lock out the driver to prevent accidental rotation.

Deactivate the i-*ALERT*® Condition Monitor

NOTICE:
Always deactivate the condition monitor when the pump is going to be shut down for an extended period of time. Failure to do so will result in reduced battery life.

1. Touch and hold a small magnet to the condition monitor over the ITT logo until the red LEDs blink three times.
   This should take 10-15 seconds if the condition monitor is in normal operating mode and approximately five seconds if the condition monitor is in alarm mode.
2. Remove the magnet.

If the deactivation is successful, solid red LEDs will be displayed.

Reset the i-*ALERT*® Condition Monitor

To deactivate or reset the i-*ALERT*®*2* monitor, please refer to the i-*ALERT*®*2* IOM or i-ALERT2.com, *http://www.ittproservices.com/aftermarket-products/monitoring/i-alert2/* (page)

NOTICE:
Always reset the condition monitor when the pump is started after maintenance, system change, or down-time. Failure to do so may result in false baseline levels that could cause the condition monitor to alert in error.

1. Touch a magnet to the condition monitor over the ITT logo to turn the power on.The condition monitor begins to establish a new baseline vibration level.

Make the final alignment of the pump and driver

WARNING:

- ⟨Ex⟩ Always disconnect and lock out power to the driver before you perform any installation or maintenance tasks. Failure to disconnect and lock out driver power will result in serious physical injury.
  - Electrical connections must be made by certified electricians in compliance with all international, national, state, and local rules.
  - Refer to driver/coupling/gear manufacturers installation and operation manuals (IOM) for specific instructions and recommendations.
- Follow shaft alignment procedures in order to prevent catastrophic failure of drive components or unintended contact of rotating parts. Follow the coupling installation and operation procedures from the coupling manufacturer.
- ⟨Ex⟩ Alignment procedures must be followed to prevent unintended contact of rotating parts. Follow coupling manufacturer's installation and operation procedures.

You must check the final alignment after the pump and driver are at operating temperature. For initial alignment instructions, see the Installation chapter.

1. Run the unit under actual operating conditions for enough time to bring the pump, driver, and associated system to operating temperature.
2. Shut down the pump and the driver.
3. Remove the coupling guard.
   See Remove the coupling guard in the Maintenance chapter.
4. Check the alignment while the unit is still hot.
   See Pump-to-driver alignment in the Installation chapter.
5. Reinstall the coupling guard.
6. Restart the pump and driver.

Maintenance

Maintenance schedule

Maintenance inspections

A maintenance schedule includes these types of inspections:

- Routine maintenance
- Routine inspections
- Three-month inspections
- Annual inspections

Shorten the inspection intervals appropriately if the pumped fluid is abrasive or corrosive or if the environment is classified as potentially explosive.

Routine maintenance

Perform these tasks whenever you perform routine maintenance:

- Lubricate the bearings.
- Inspect the seal.

Routine inspections

Perform these tasks whenever you check the pump during routine inspections:

- Check the level and condition of the oil through the sight glass on the bearing frame.
- Check for unusual noise, vibration, and bearing temperatures.
- Check the pump and piping for leaks.
- Analyze the vibration.
- Inspect the discharge pressure.
- Inspect the temperature.
- Check the seal chamber and stuffing box for leaks.
  - Ensure that there are no leaks from the mechanical seal.
  - Adjust or replace the packing in the stuffing box if you notice excessive leaking.

Three-month inspections

Perform these tasks every three months:

- Check that the foundation and the hold-down bolts are tight.
- Check the packing if the pump has been left idle, and replace as required.
- Change the oil every three months (2000 operating hours) at minimum.
  - Change the oil more often if there are adverse atmospheric or other conditions that might contaminate or break down the oil.
- Check the shaft alignment, and realign as required.

Annual inspections

Perform these inspections one time each year:

- Check the pump capacity.
- Check the pump pressure.
- Check the pump power.

If the pump performance does not satisfy your process requirements, and the process requirements have not changed, then perform these steps:

1. Disassemble the pump.
2. Inspect it.

3. Replace worn parts.

Bearing maintenance

These bearing lubrication sections list different temperatures of the pumped fluid. If the pump is ATEX-certified and the temperature of the pumped fluid exceeds the permitted temperature values, then consult your ITT representative.

Bearing lubrication schedule

Type of bearing	First lubrication	Lubrication intervals
Oil-lubricated bearings	Add oil before you install and start the pump. Change the oil after 200 hours for new bearings.	After the first 200 hours, change the oil every 2000 operating hours or every three months.
Grease-lubricated bearings	Grease-lubricated bearings are initially lubricated at the factory.	Regrease bearings every 2000 operating hours or every three months.

Lubricating-oil requirements

Oil requirements based on temperature

For the majority of operating conditions, bearing temperatures run between 49°C | 120°F and 82°C | 180°F, and you can use an oil of ISO viscosity grade 68 at 38°C | 100°F. If temperatures exceed 82°C | 180°F, refer to the table for temperature requirements.

Temperature	Oil requirement
Bearing temperatures exceed 82°C	180°F	Use ISO viscosity grade 100 with bearing-frame cooling or finned-tube oil cooler. The finned-tube oil cooler is standard with the HT 3196 model and optional for all other models.
Pumped-fluid temperatures exceed 177°C	350°F	Use synthetic lubrication.

Oil volumes

Oil volume requirements

This table shows the required amount of oil for oil-lubricated bearings.

Frame	ml	Qts.	Oz.
STi	400	0.5	16
MTi	1400	1.5	47
LTi	1400	1.5	48
XLT-i and i17	3000	3	96

Acceptable oil for lubricating bearings

Acceptable lubricants

Examples of acceptable high quality turbine oils with rust and oxidation inhibitors.

Brand	Lubricant type
Chevron	GTS Oil 68
Exxon	Teresstic EP 68
Mobil	DTE 26 300 SSU @ 38°C | 100°F
Philips	Mangus Oil 315
Shell	Tellus Oil 68
Sunoco	Sunvis 968
Royal Purple	SYNFILM ISO VG 68 Synthetic Lube

Examples of acceptable synthetic lubricants.

Brand	Lubricant type
Castrol	Hyspin R&O 220
Chevron	GST 220
Exxon	Teresstic 220
Mobil	DTE Oil BB SHC 630
Shell	Marlina 220 Tellus 220
Sunoco	Sunvis 9220
Texaco	Regal R&O 220 Rando HD 220
Royal Purple	Synfilm GT 220 Synergy 220

Regrease the grease-lubricated bearings

NOTICE:
Make sure that the grease container, the greasing device, and the fittings are clean. Failure to do this can result in impurities entering the bearing housing when you regrease the bearings.

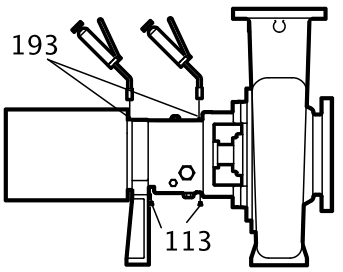

Figure 45: Bearing lubrication

1. Wipe dirt from the grease fittings.
2. Remove the two grease-relief plugs from the bottom of the frame.
3. Fill both of the grease cavities through the fittings with a recommended grease until the fresh grease comes out of the relief holes.
4. Make sure that the frame seals are seated in the bearing housing.
   If they are not, press them in place with the drains located at the bottom.
5. Reinstall the grease-relief plugs.
6. Wipe off any excess grease.
7. Recheck the alignment.

The bearing temperature usually rises after you regrease due to an excess supply of grease. Temperatures return to normal in about two to four operating hours as the pump runs and purges the excess grease from the bearings.

Lubricating-grease requirements

Precautions

NOTICE:

- Never mix greases of different consistencies (NLGI 1 or 3 with NLGI 2) or with different thickeners. For example, never mix a lithium-based grease with a polyurea-based grease. Doing so may result in decreased performance.
- Remove the bearings and old grease if you need to change the grease type or consistency. Failure to do so may result in equipment damage or decreased performance.

Bearing temperature

Bearing temperatures are generally about 18°C | 20°F greater than bearing-housing outer surface temperatures.
This table shows the type of grease required for the operating temperature of the pump.

Bearing temperature	Type of grease
-15°C to 110°C | 5°F to 230°F	Use a lithium-based mineral-oil grease with a consistency of NLGI 2.
Exceed 177°C | 350°F	Use a high-temperature grease. Mineral-oil greases should have oxidation stabilizers and a consistency of NGLI 3.

Grease recommendations based on temperature

Most pumps use Sunoco 2EP grease. High temperature units that can pump fluids with a temperature greater than 177°C | 350°F use Mobil SCH32.
This table shows which brand of grease to use when lubricating the pump.

Brand	When temperature of pumped fluid is less than 177°C | 350°F NLGI consistency 2	When temperature of pumped fluid is greater than177°C | 350°F NLGI consistency 3
Mobil	Mobilux EP2	SCH32
Exxon	Unirex N2	Unirex N3
Sunoco	Mutipurpose 2EP	N/A
SKF	LGMT 2	LGMT 3

Lubricate the bearings after a shutdown period

1. Flush out the bearings and bearing frame with a light oil to remove contaminants. During flushing, make sure to rotate the shaft slowly by hand.
2. Flush the bearing housing with the proper lubricating oil to ensure oil quality after cleaning.
3. Refer to "Reassembly" section for proper bearing greasing procedure.

Shaft seal maintenance

Mechanical-seal maintenance

WARNING:
⟨Ex⟩ The mechanical seal used in an Ex-classified environment must be properly certified. Prior to startup, make sure that all areas that could leak pumped fluid to the work environment are closed.

CAUTION:
Never operate the pump without liquid supplied to mechanical seal. If you run a mechanical seal dry, even for a few seconds, this can cause seal damage. Physical injury can occur if a mechanical seal fails.

Cartridge-type mechanical seals

Cartridge-type mechanical seals are commonly used. Cartridge seals are preset by the seal manufacturer and require no field settings. Cartridge seals installed by the user require disengagement of the holding clips prior to operation, allowing the seal to slide into place. If the seal has been installed in the pump by ITT, these clips have already been disengaged.

Other mechanical seal types

For other types of mechanical seals, refer to the instructions provided by the seal manufacturer for installation and setting.

Reference drawing

The manufacturer supplies a reference drawing with the data package. Keep this drawing for future use when you perform maintenance and seal adjustments. The seal drawing specifies the required flush fluid and attachment points.

Before you start the pump

Check the seal and all flush piping.

Mechanical seal life

The life of a mechanical seal depends on the cleanliness of the pumped fluid. Due to the diversity of operating conditions, it is not possible to give definite indications as to the life of a mechanical seal.

Packed stuffing-box maintenance

WARNING:

- Packed stuffing boxes are not allowed in an ATEX-classified environment.
- Never attempt to replace the packing until the driver is properly locked out and the coupling spacer is removed.

Accepted leakage rate

It is not necessary to shut down or disassemble the pump to inspect the packing operation. During normal operation, the packing should leak approximately one drop per second.

Adjustment of gland

Adjust the gland if the leakage rate is greater than or less than the specified rate.

Evenly adjust each of the two gland bolts with a one-quarter (1/4) turn until the desired leakage rate is obtained. Tighten the bolts to decrease the rate. Loosen the bolts to increase the rate.

Tightening of packing

NOTICE: Never over-tighten packing to the point where less than one drop per second is observed. Over-tightening can cause excessive wear and power consumption during operation.

If you cannot tighten the packing to obtain less than the specified leakage rate, then replace the packing.

Dynamic-seal maintenance

WARNING:

Dynamic seals are not allowed in an ATEX-classified environment.

About the dynamic seal

Dynamic seal parts do not wear substantially to affect operation and do not require maintenance unless the service is particularly abrasive or corrosive.

Repeller

The dynamic repeller prevents pumpage leaks through the stuffing box when the pump operates under published acceptable conditions.

Static seal

A static seal prevents leakage when the pump is shut down. A static seal is either of the following:

- a lip seal
- an elastomeric-face seal
- graphite packing

The only maintenance that the lip seal and the elastomeric-face seal require is replacement when leakage becomes excessive.

The graphite packing should be installed as stuffing-box packing and is designed to run dry.

Disassembly

Disassembly precautions

WARNING:

- (Ex) This manual clearly identifies accepted methods for disassembling units. These methods must be adhered to. Trapped liquid can rapidly expand and result in a violent explosion and injury. Never apply heat to impellers, propellers, or their retaining devices to aid in their removal unless explicitly stated in this manual.
- (Ex) Always disconnect and lock out power to the driver before you perform any installation or maintenance tasks. Failure to disconnect and lock out driver power will result in serious physical injury.
  - Electrical connections must be made by certified electricians in compliance with all international, national, state, and local rules.
  - Refer to driver/coupling/gear manufacturers installation and operation manuals (IOM) for specific instructions and recommendations.
- Crush hazard. The unit and the components can be heavy. Use proper lifting methods and wear steel-toed shoes at all times.
- The pump can handle hazardous and toxic fluids. Identify the contents of the pump and observe proper decontamination procedures in order to eliminate the possible exposure to any hazardous or toxic fluids. Wear the proper personal protective equipment. Potential hazards include, but are not limited to, high temperature, flammable, acidic, caustic, explosive, and other risks. You must handle and dispose of pumped fluid in compliance with the applicable environmental regulations.
- A small amount of liquid will be present in certain areas like the seal chamber.

NOTICE:

- Avoid injury. Worn pump components can have sharp edges. Wear appropriate gloves while handling these parts.
- Make sure that all replacement parts are available before you disassemble the pump for overhaul.

Tools required

In order to disassemble the pump, you need these tools:

- Bearing puller
- Brass drift punch
- Cleaning agents and solvents
- Dial indicators
- Feeler gauges
- Hex wrenches
- Hydraulic press
- Induction heater
- Leveling blocks and shims
- Lifting sling
- Micrometer
- Rubber mallet
- Screwdriver
- Snap-ring pliers
- Torque wrench with sockets
- Wrenches
- Lifting eyebolt (dependent on pump size)

Drain the pump

CAUTION:
- Allow all system and pump components to cool before you handle them to prevent physical injury.
- If your pump is a Model NM3171, NM3196, 3198, 3298, V3298, SP3298, 4150, 4550, or 3107 there is a possible risk of static electric discharge from plastic parts that are not properly grounded. If the pumped fluid is non-conductive, drain and flush the pump with a conductive fluid under conditions that will not allow for a spark to be released to the atmosphere.

1. Close the isolation valves on the suction and discharge sides of the pump.
   You must drain the system if no valves are installed.
2. Open the drain valve.
   Do not proceed until liquid stops coming out of the drain valve. If liquid continues to flow from the drain valve, the isolation valves are not sealing properly and you must repair them before you proceed.
3. Leave the drain valve open and remove the drain plug located on the bottom of the pump housing.
   Do not reinstall the plug or close the drain valve until the reassembly is complete.
4. Drain the liquid from the piping and flush the pump if it is necessary.
5. Disconnect all auxiliary piping and tubing.
6. Remove the coupling guard.

Remove the coupling

1. Disconnect the coupling.
2. Remove the C-face adapter.
3. Remove the coupling-guard pump end-plate.

Remove the back pull-out assembly

CAUTION:
Never remove the back pull-out assembly without assistance.

1. Is your bearing frame oil lubricated?
   - If No: Proceed to step 2.
   - If Yes:
     1. Remove the bearing-frame drain plug (408A) in order to drain oil from the bearing frame.
     2. Replace the plug after the oil is drained.

3. Remove the oil reservoir, if equipped.

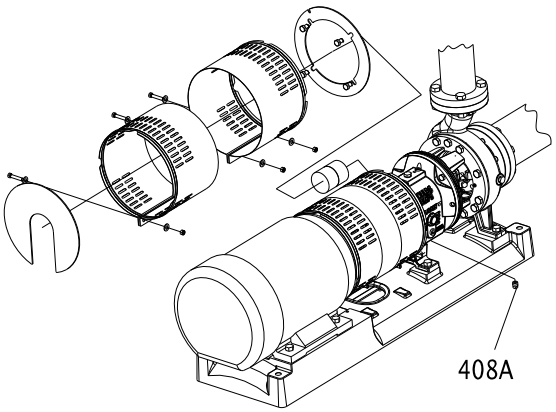

Figure 46: Back pull-out assembly removal (oil lubricated bearing frame)

NOTICE:
Oil analysis should be part of a preventive maintenance program that determines the cause of a failure. Save the oil in a clean container for inspection.

2. Does your pump use a C-face adapter?
   - If Yes: Place one sling from the hoist through the frame adapter (108) or frame (228A) for the STi and a second sling from the hoist through the C-face adapter.
   - If No: Place a sling from the hoist through the frame adapter (108) or the frame (228A) for the STi.

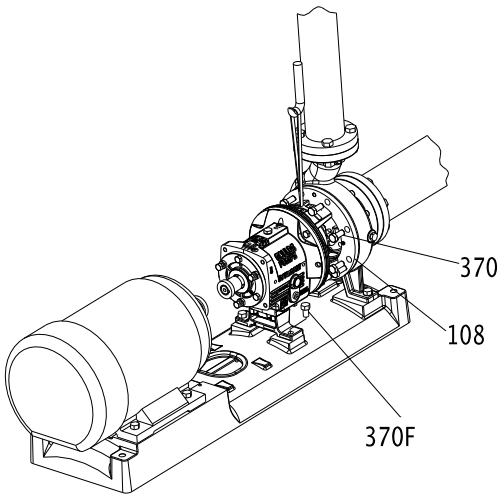

Figure 47: Back pull-out assembly removal (with C-face adapter)

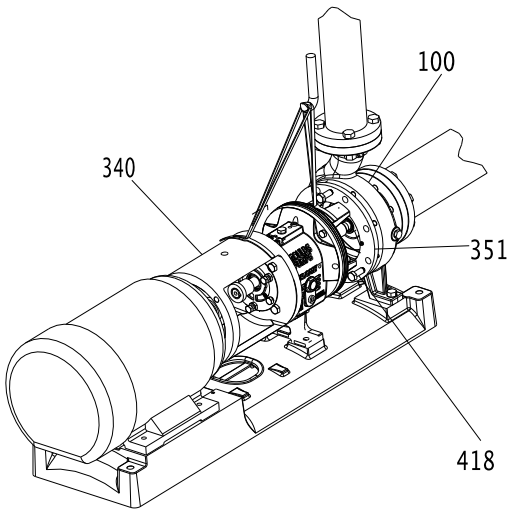

Figure 48: Back pull-out assembly removal (without C-face adapter)

3. Remove the hold-down bolts of the bearing frame foot.
4. Remove the casing bolts.

WARNING:
- Never use heat to disassemble the pump due to the risk of an explosion from trapped liquid.

5. Tighten the jackscrews evenly, using an alternating pattern, in order to remove the back pull-out assembly.
   You can use penetrating oil if the adapter to the casing joint is corroded.
6. Remove the back pull-out assembly from the casing (100).
7. Mark and remove the shims from under the frame foot and save them for reassembly.
8. Remove and discard the casing gasket.
   You will insert a new casing gasket during reassembly.
9. Remove the jackscrews.
10. Clean all gasket surfaces.
    Clean surfaces prevent the casing gasket from partially adhering to the casing due to binders and adhesives in the gasket material.

Remove the coupling hub

1. Clamp the frame adapter securely to the workbench.
2. Remove the coupling hub.

Mark the shaft for relocation of the coupling hub during reassembly.

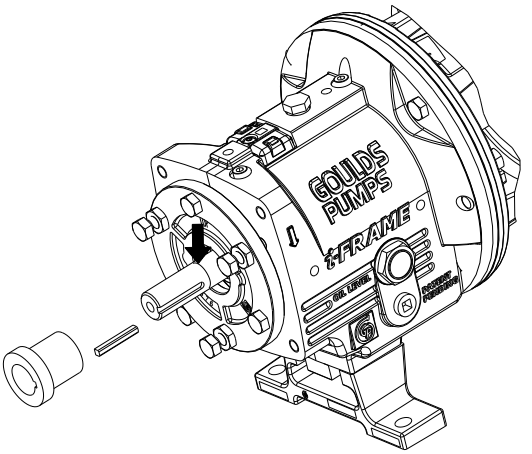

Figure 49: Coupling hub removal

Impeller removal

Remove the impeller (STi, MTi, and LTi)

WARNING:
Never apply heat to remove an impeller. The use of heat may cause an explosion due to trapped liquid, resulting in severe physical injury and property damage.

CAUTION:
Wear heavy work gloves when you handle impellers. The sharp edges can cause physical injury.

1. Slide the shaft wrench (A05107A or A01676A) over the shaft (122) and key.
2. Rotate the impeller (101) clockwise (viewed from the impeller end of the shaft) and raise the wrench off of the work surface.
3. To loosen the impeller, quickly turn it counter-clockwise (viewed from the impeller end of the shaft) while impacting the wrench handle on the workbench or a solid block.

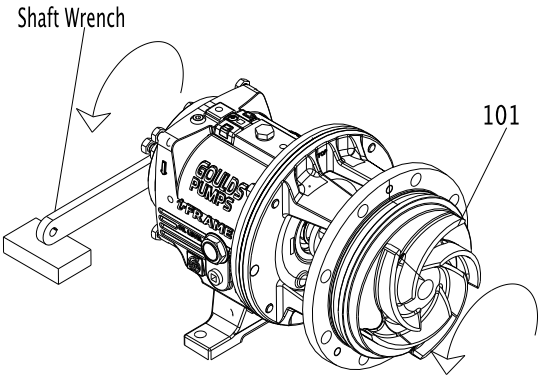

Figure 50: Loosen impeller

4. Repeat step 3 until the impeller becomes loose.
5. Remove and discard the impeller O-ring (412A).

You will insert a new O-ring during reassembly.

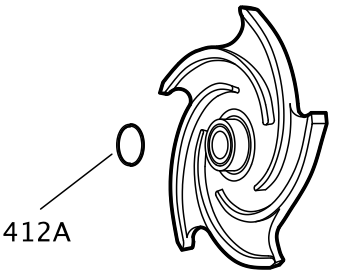

Figure 51: O-ring for models 3196, HT 3196, NM 3196, 3198, and 3796

If the impeller cannot be removed by the previous methods, cut the shaft between the gland and the frame, remove the impeller, stuffing-box cover, gland, sleeve, and shaft end as a unit. Do not apply heat.

Remove the impeller (XLT-i, and i17)

WARNING:
Never apply heat to remove an impeller. The use of heat may cause an explosion due to trapped liquid, resulting in severe physical injury and property damage.

CAUTION:
Wear heavy work gloves when you handle impellers. The sharp edges can cause physical injury.

Clamp the frame foot (241) to the workbench when you use this method to remove the impeller.

1. Remove the impeller plug (458Y) from the front of the impeller (101) and discard the Teflon gasket (428D).

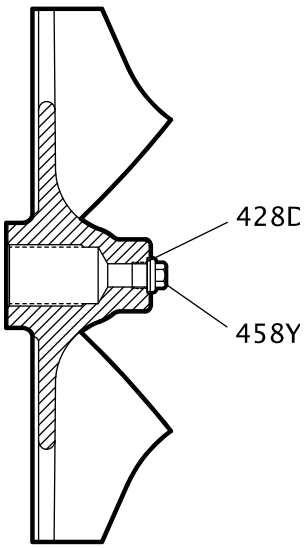

2. Spray penetrating oil through the plug hole into the cavity at the end of the shaft and let it penetrate for 15 minutes.
3. While waiting, rotate the shaft several times to distribute the oil.
4. Slide the shaft wrench (A05107A) over the shaft (122) and key.
5. Rotate the impeller clockwise (viewed from the impeller end of the shaft) and raise the wrench off of the work surface.

6. To loosen the impeller, quickly turn the impeller counter-clockwise (viewed from the impeller end of the shaft) while impacting the wrench handle on the workbench or a solid block.
7. Repeat step 6 until the impeller becomes loose.
8. If step 6 and 7 do not work then do this:
   a) Place a socket wrench over the cast nut on the impeller hub.
   b) Turn the impeller counter-clockwise (viewed from the impeller end of the shaft).

   Be sure that the impeller wrench rests on the workbench or a solid block and that the power end is secure on the work surface.
9. Remove and discard the impeller O-ring (412A).
   You will insert a new O-ring during reassembly.

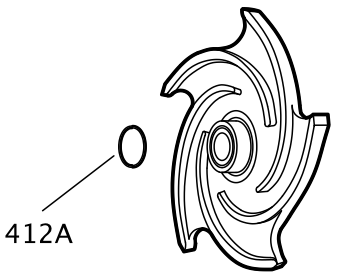

Figure 52: O-ring for models 3196 and HT 3196

If the impeller cannot be removed by the previous methods, cut the shaft between the gland and the frame, remove the impeller, stuffing-box cover, gland, sleeve, and shaft end as a unit. Do not apply heat.

Seal-chamber cover removal

Seal-chamber removal procedures

Choose from one of these procedures to remove the seal-chamber cover.

Table 10: Procedures for seal-chamber cover removal by model

Model	Procedure
3196, CV 3196, HT 3196, LF 3196, 3796	Remove the seal-chamber cover.
NM 3196, 3198	Remove the seal-chamber cover and/or backplate.

Remove the seal-chamber cover (3196, CV 3196, HT 3196, LF 3196, 3796)

1. Remove the gland stud nuts (355).
2. Remove the seal-chamber stud nuts (370H).

3. Remove the seal chamber (184).

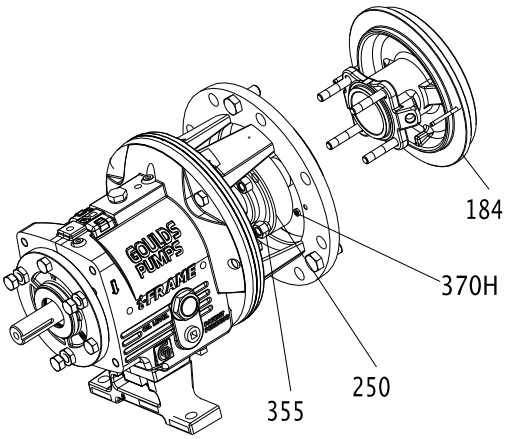

Figure 53: Seal chamber cover removal

4. Remove the shaft sleeve (126) if it is used.
   The mechanical seal is attached to the sleeve.

NOTICE:
Be careful with the stationary portion of the mechanical seal that is either clamped between the backplate and the gland or seated in the seal-chamber bore. Failure to do so may result in equipment damage.

5. Remove the rotary portion of the seal from the sleeve by loosening the setscrews and sliding it off the sleeve.
   Refer to the mechanical-seal instructions for more information.
6. Remove the gland (250), the stationary portion of the seal, and the O-ring (360Q).

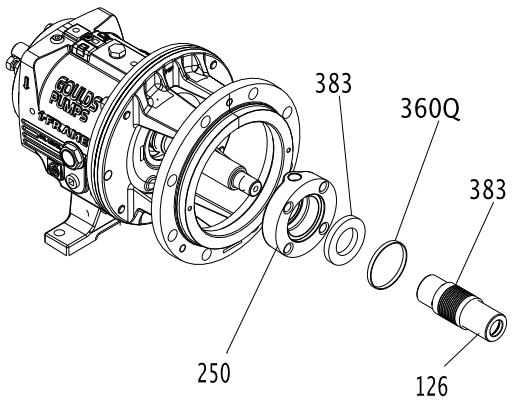

Figure 54: Gland removal

Remove the stuffing-box cover (3196, CV 3196, HT 3196, LF 3196, 3796)

1. Remove the gland nuts (355) and the gland (107).
2. Remove the stuffing-box-cover nuts (370H).

3. Remove the stuffing-box cover (184).

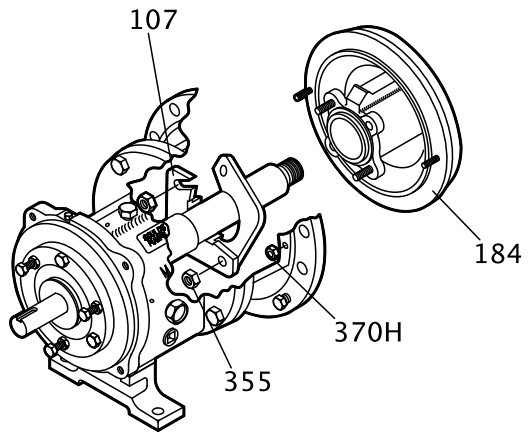

Figure 55: Stuffing box cover removal

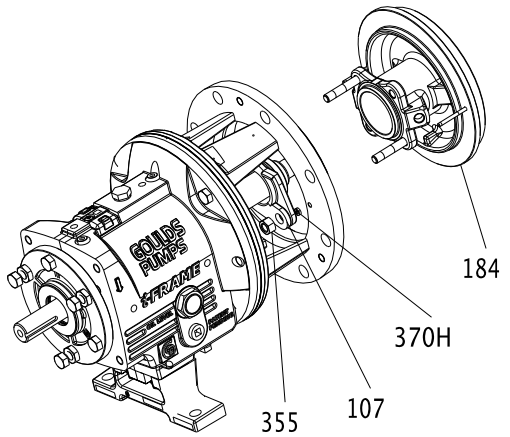

Figure 56: Stuffing box cover removal

4. Remove the shaft sleeve (126).

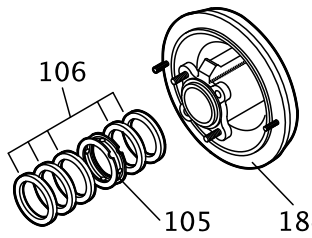

Figure 57: Remove the shaft sleeve

5. Remove the packing (106) and lantern ring (105) from the stuffing-box cover (184).

A lantern ring does not come with self-lubricating graphite packing.

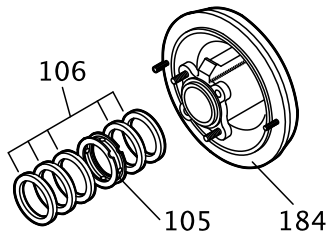

Figure 58: Packing and lantern ring removal

Remove the dynamic seal

1. Remove the stud nuts (370H).
2. Remove the dynamic-seal assembly.

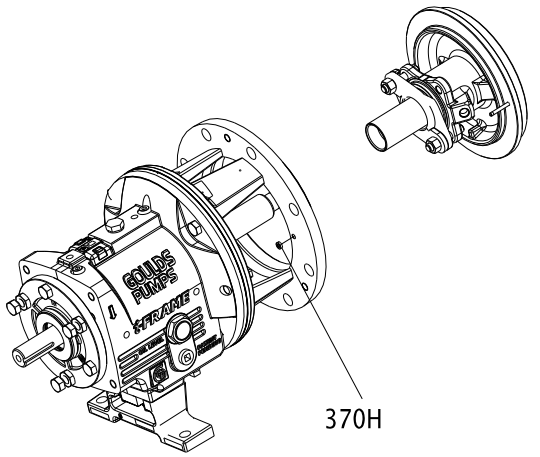

Figure 59: Dynamic seal removal

3. Remove the socket head cap screws (265).
4. Remove the packed stuffing box cover (184) and gasket (264).
5. Remove the repeller (262) from the backplate (444).

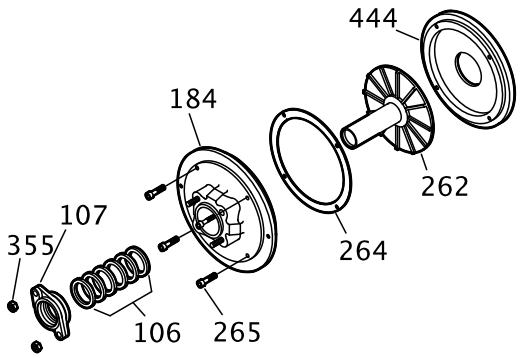

Figure 60: Repeller removal

Remove the frame adapter (MTi, LTi, XLT-i, i17)

The 3198 frame adapter is not interchangeable with the adapter of any other model.

1. Remove the dowel pins (469B) and the bolts (370B).
2. Remove the frame adapter (108).
3. Remove and discard the gasket (360D).

You will install a new gasket during reassembly.

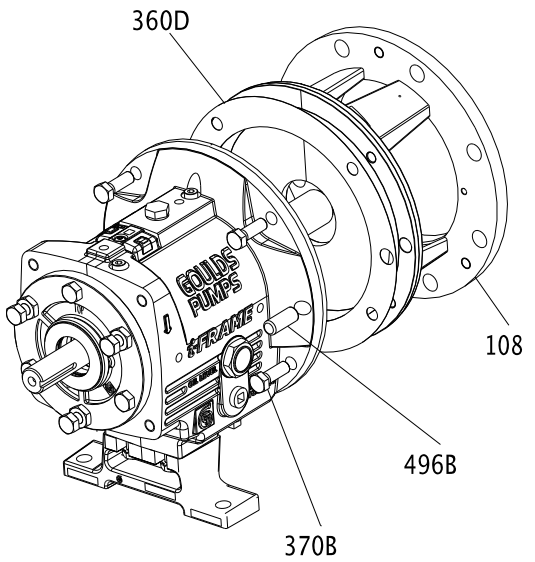

Remove the inboard labyrinth oil seal

Labyrinth oil-seal O-rings are part of the 3196 maintenance kits, and they are sold separately.

1. Determine the fit of your labyrinth oil seal.

Table 11: Labyrinth oil-seal fit

Model	Type of fit
STi	O-ring fit into the bearing-frame adapter (228A)
MTi, LTi, XLT-i and i17	O-ring fit into the frame adapter

2. Remove the O-rings (497H and 497J) and the seal (333A).

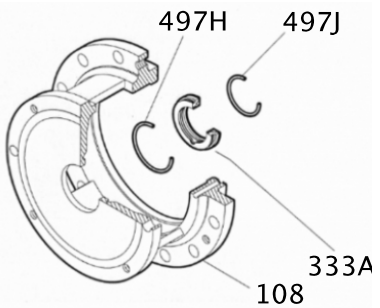

Figure 61: O-ring removal

Power-end disassembly

Disassemble the power end (STi, MTi)

1. Remove the clamp screws (370C) and back off the jam nuts (423).
2. Tighten the jack screws (370D) evenly to move the bearing housing (134) out of the bearing frame (228A).

3. Remove the shaft assembly from the bearing frame (228A).

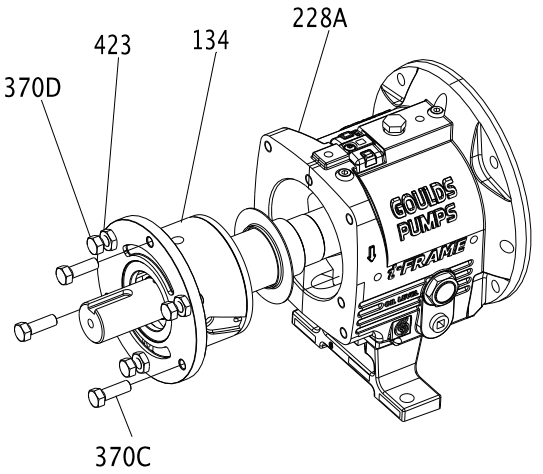

Figure 62: Shaft assembly removal

4. Remove the jack screws (370D) with nuts (423).
5. Remove the bearing housing O-ring (496) and the bearings.
6. Remove the outboard bearing retaining snap ring (361A).

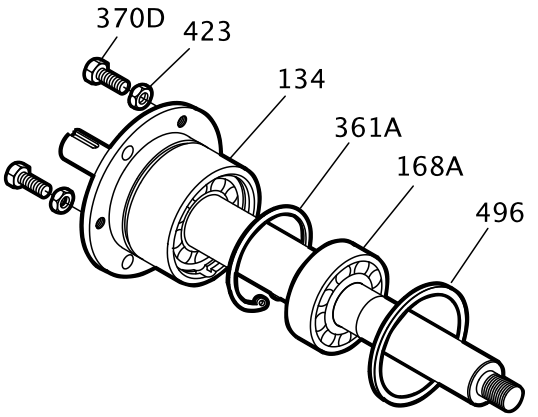

Figure 63: Outboard bearing retaining snap ring removal

7. Remove the bearing housing (134) and bearings (112A and 168A) from the shaft (122).

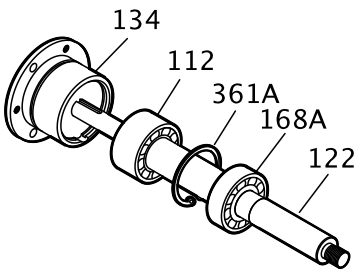

Figure 64: Bearing housing and bearings removal

8. Remove the bearing locknut (136) and bearing lock washer (382).
9. Remove the inboard bearing (168A).
10. Remove the outboard bearing (112A).

NOTICE:
Use force only on the inner race when you press bearings off the shaft. Do not use force in situations in which you might break a part. Doing so may result in equipment damage.

NOTICE:
Save the bearings for inspection. Do not reuse the bearings. Doing so may result in decreased performance.

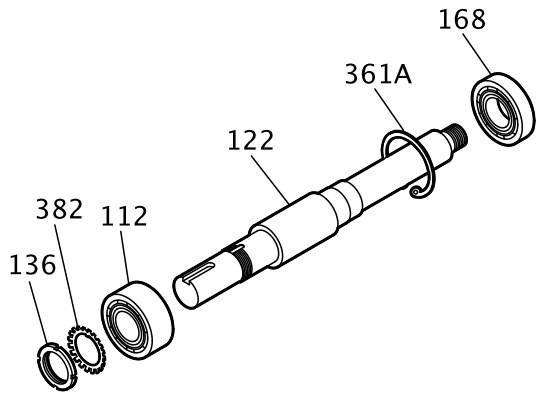

Figure 65: Outboard bearing removal

Disassemble the power end (STi and MTi with duplex bearings)

1. Remove the clamp screws (370C) and back off the jam nuts (423).
2. Tighten the jack screws (370D) evenly to move the bearing housing (134) out of the bearing frame (228A).
3. Remove the shaft assembly from the bearing frame (228A).

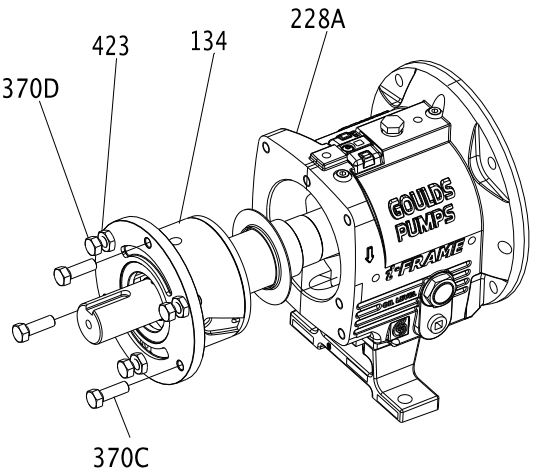

Figure 66: Shaft assembly removal

4. Remove the jack screws (370D) with the nuts (423).

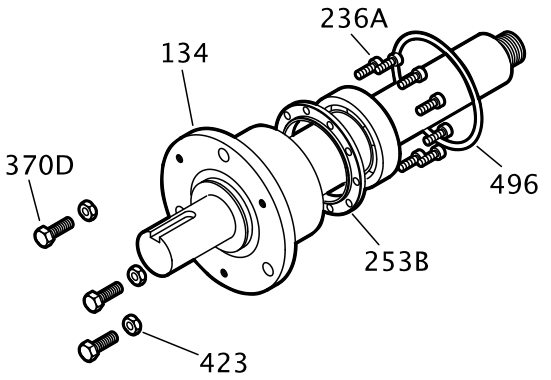

Figure 67: Jack screw removal

5. Remove the bearing housing O-ring (496).
6. Remove the clamp ring screws (236A) and separate the clamp ring (253B) from the bearing housing (134).
   You must remove the bearings before you can remove the clamp ring from the shaft.
7. Remove the bearing housing (134) and the bearings (112A and 168A) from the shaft (122).

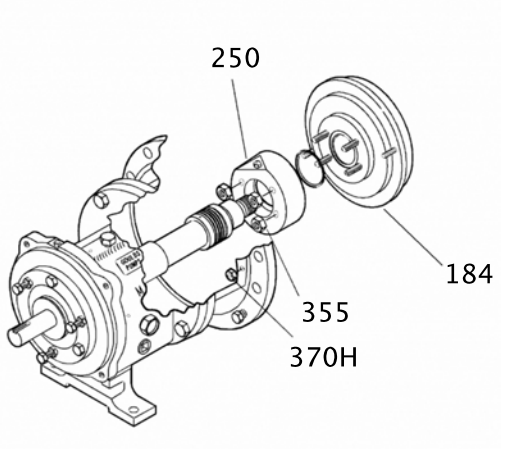

Figure 68: Bearing housing and bearing removal

8. Remove the inboard bearing (168A).

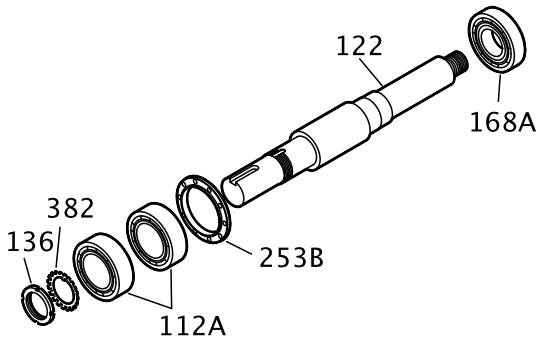

Figure 69: Inboard bearing removal

9. Remove the bearing locknut (136) and bearing lockwasher (382).
10. Remove the outboard bearings (112A).

NOTICE:
Use force only on the inner race when you press bearings off the shaft. Do not use force in situations in which you might break a part. Doing so may result in equipment damage.

NOTICE:
Save the bearings for inspection. Do not reuse the bearings. Doing so may result in decreased performance.

11. Remove the outboard labyrinth oil seal (332A) from the bearing housing (134). Remove the O-rings (497F and 497G) if it is necessary. Labyrinth oil seal O-rings are part of the 3196 maintenance kits and they are sold separately.

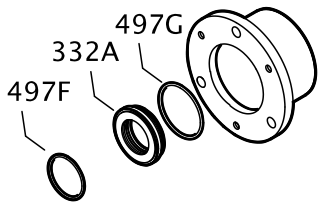

Figure 70: Outboard labyrinth oil seal removal

Disassemble the power end (LTi)

1. Remove the clamp screws (370C) and back off the jam nuts (423).
2. Evenly tighten the jack screws (370D) to move the bearing housing (134) out of the bearing frame (228A).
3. Remove the shaft assembly from the bearing frame (228A).

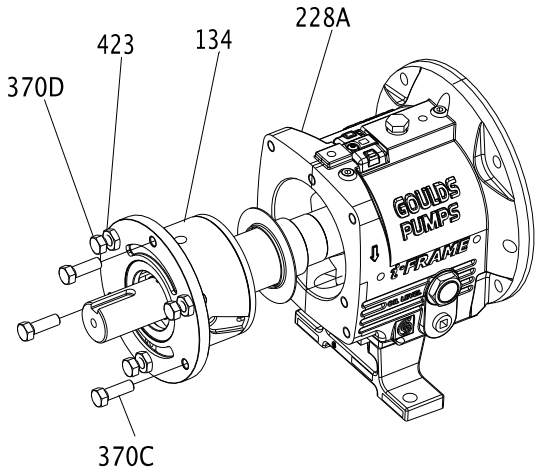

Figure 71: Shaft assembly removal

4. Remove the jack screws (370D) with the nuts (423).
5. Remove the clamp-ring screws (236A) and separate the clamp ring (253B) from the bearing housing (134).

You must remove the bearings before you can remove the clamp ring from the shaft.

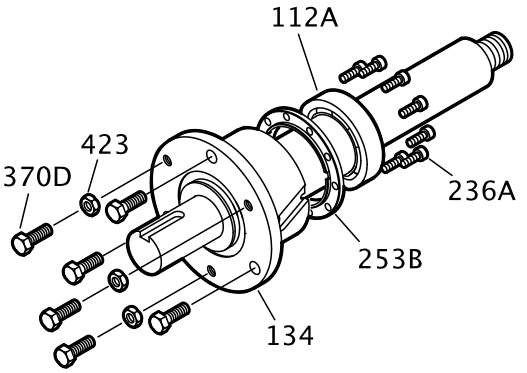

Figure 72: Clamp ring removal

6. Remove the bearing housing (134) and the bearings (112A and 168A) from the shaft (122).

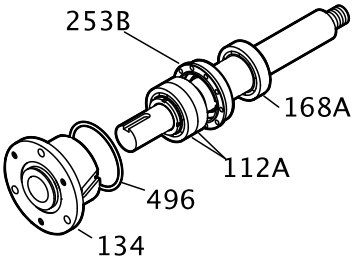

Figure 73: Bearing housing and bearing removal

7. Remove the bearing housing O-ring (496) and the inboard bearing (168A).

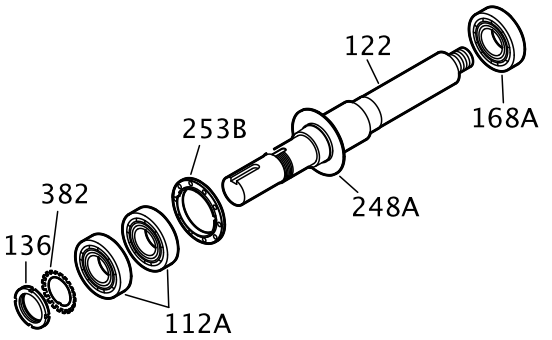

Figure 74: O-ring removal

8. Remove the bearing locknut (136) and the bearing lockwasher (382).
9. Remove the outboard bearings (112A) and the clamp ring (253B).

NOTICE:
Do not remove the oil flinger unless it is damaged. Doing so may result in unnecessary shutdown time or equipment damage.

NOTICE:
Use force only on the inner race when you press bearings off the shaft. Do not use force in situations in which you might break a part. Doing so may result in equipment damage.

NOTICE:
Save the bearings for inspection. Do not reuse the bearings. Doing so may result in decreased performance.

10. Remove the outboard labyrinth oil seal (332A) from the bearing housing (134).
11. Remove the O-rings (497F and 497G) if it is necessary.
    Labyrinth oil-seal O-rings are part of the 3196 maintenance kits, and they are sold separately.

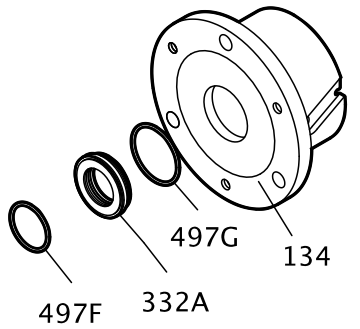

Figure 75: O-ring removal

Disassemble the power end (XLT-i and i17)

1. Remove the bearing frame from the frame foot (241) using the frame-foot bolts (370F).

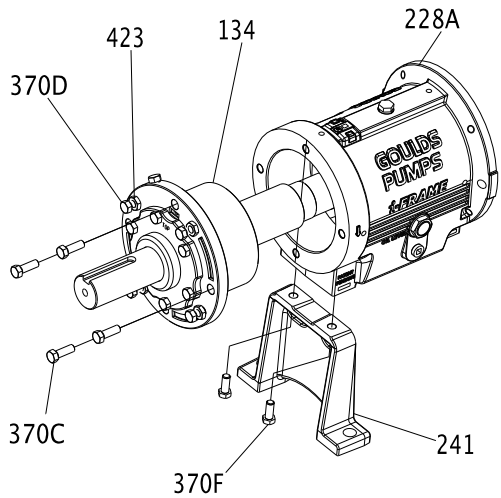

2. Remove the clamp screws (370C) and back off the jam nuts (423).
3. Tighten the jack screws (370D) evenly to move the bearing housing (134) out of the bearing frame (228A).
4. Remove the shaft assembly from the bearing frame (228A).
5. Remove the jack screws (370D), the nuts (423), and the bearing housing O-ring.

6. Remove the inboard bearing (168A).

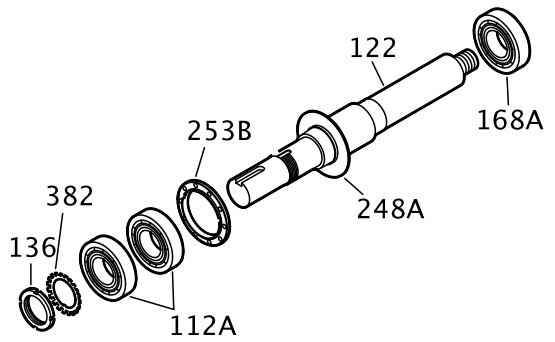

7. Remove the bolts (371C), the bearing end cover (109A), and the gasket (360C).
8. Remove the outboard labyrinth oil seal (332A) from the end cover (109A).
9. Remove the O-rings (497F and 497G) if it is necessary.
   Labyrinth oil-seal O-rings are part of the 3196 maintenance kits, and they are sold separately.

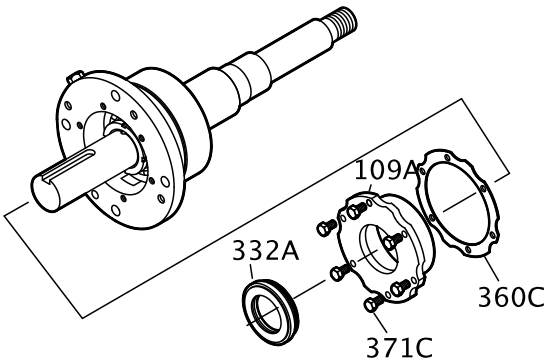

10. Remove the bearing housing (134) and the bearing (112A) from the shaft (122).

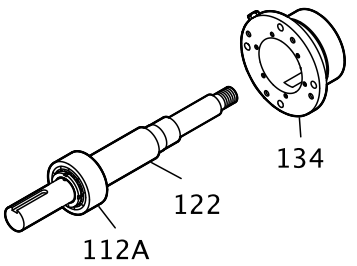

11. Remove the bearing locknut (136), the bearing lockwasher (382), and the outboard bearing (112A).

NOTICE:
Use force only on the inner race when you press bearings off the shaft. Do not use force in situations in which you might break a part. Doing so may result in equipment damage.

NOTICE:
Save the bearings for inspection. Do not reuse the bearings. Doing so may result in decreased performance.

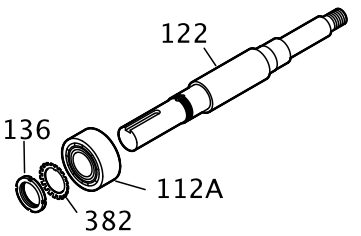

Disassemble the power end (XLT-i and i17 with duplex bearings)

1. Remove the bearing frame to frame foot (241) using the frame-foot bolts (370F).

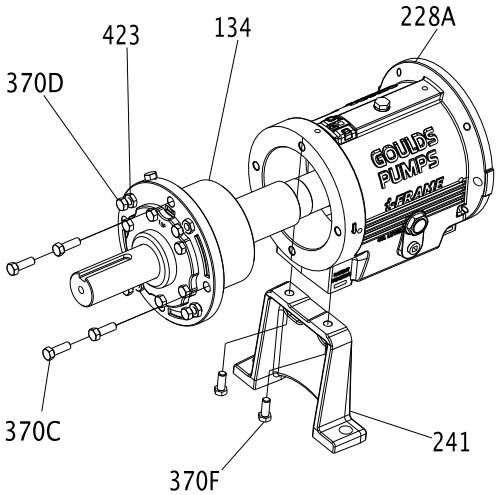

2. Remove the clamp screws (370C) and back off the jam nuts (423).
3. Tighten the jack screws (370D) evenly to move the bearing housing (134) out of the bearing frame (228A).
4. Remove the shaft assembly from the bearing frame (228A).
5. Remove the jack screws (370D) and the nuts (423).
6. Remove the bearing housing O-ring (496) and the inboard bearing (168A).

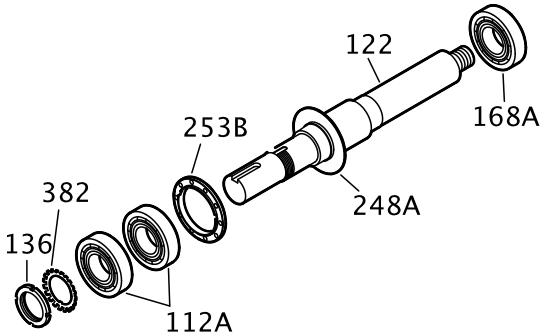

7. Remove the bolts (371C), the end cover (109A), and the gasket (360C).

8. If necessary, remove the outboard labyrinth oil seal (332A) from the end cover (109A) and remove the O-rings (497F and 497G).
   Labyrinth oil-seal O-rings are part of the 3196 maintenance kits, or they are sold separately.

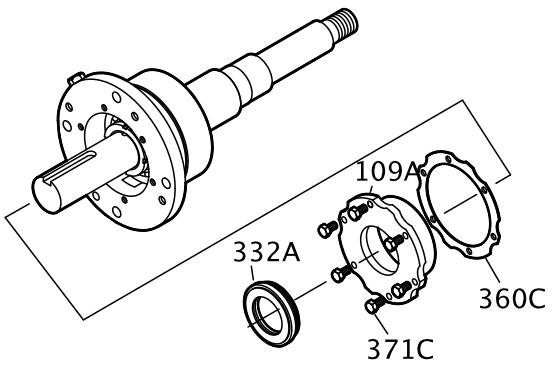

9. Remove the bearing housing (134) and bearings (112A) from the shaft (122) .

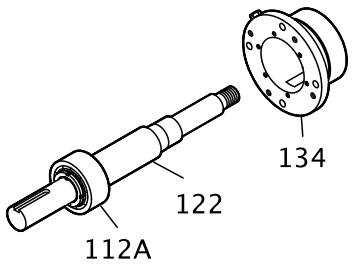

10. Remove the bearing locknut (136), the bearing lockwasher (382), and the outboard bearing (112A).

NOTICE:
Use force only on the inner race when you press bearings off the shaft. Do not use force in situations in which you might break a part. Doing so may result in equipment damage.

NOTICE:
Save the bearings for inspection. Do not reuse the bearings. Doing so may result in decreased performance.

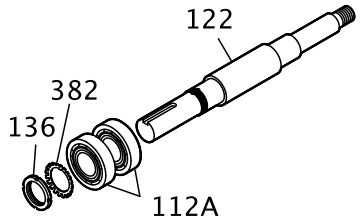

Disassemble the bearing frame

1. Remove these plugs from the bearing frame (228A).
   - oil-fill plug (113A)
   - oil-drain plug (408A)
   - sight-oiler plug (408J)
   - four oil mist/grease connection plugs (408H)

- oil-cooler inlet and outlet plugs (408L and 408M) or oil cooler

2. For the MTi and LTi models, remove the bearing frame foot-to-frame bolts (370F) and the frame foot (241).

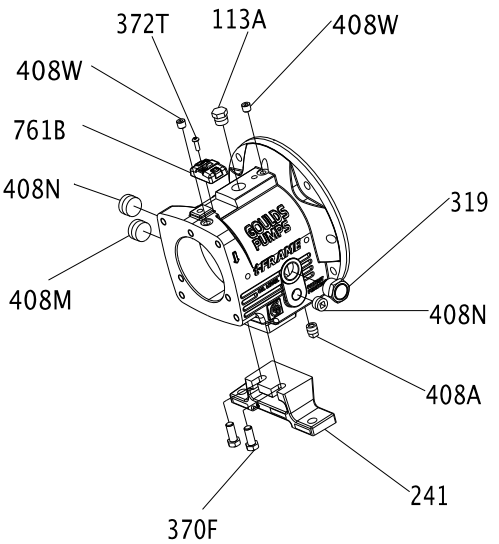

Figure 76: Plug removal

Guidelines for i-*ALERT*® Condition Monitor disposal

Precautions

WARNING:

- Never heat the condition monitor to temperatures in excess of 100°C | 212°F. Heating to these temperatures could result in death or serious injury.
- Never dispose of the condition monitor in a fire. This could result in death or serious injury.

Guidelines

The battery contained in the condition monitor does not contain enough lithium to qualify as reactive hazardous waste. Use these guidelines when disposing of the condition monitor.

- The condition monitor is safe for disposal in the normal municipal waste stream.
- Adhere to local laws when you dispose of the condition monitor.

Disassemble the C-face adapter

NOTICE:
You must properly support the motor with a clean, uncorroded eye bolt or a strap under both end bells. Failure to do so may result in equipment damage.

1. Loosen the motor-mounting bolts and remove the motor.

Table 12: Required number of motor-mounting bolts
This table shows the number of motor-mounting bolts.

Pump frame	Motor frame	Number of bolts
STi	All	4
MTi and LTi	143-286	4
	324-365	8

2. Loosen the bolts attached to the bearing-frame flange and remove the C-face adapter from the bearing frame.

Pre-assembly inspections

Guidelines

Before you assemble the pump parts, make sure you follow these guidelines:

- Inspect the pump parts according to the information in these pre-assembly topics before you reassemble your pump. Replace any part that does not meet the required criteria.
- Make sure that the parts are clean. Clean the pump parts in solvent in order to remove oil, grease, and dirt.

NOTICE:
Protect machined surfaces while you clean the parts. Failure to do so may result in equipment damage.

Replacement guidelines

Casing check and replacement

WARNING:
Avoid death or serious injury. Leaking fluid can cause fire and/or burns. Inspect and assure gasket sealing surfaces are not damaged and repair or replace as necessary.

Inspect the casing for cracks and excessive wear or pitting. Thoroughly clean gasket surfaces and alignment fits in order to remove rust and debris.

Repair or replace the casing if you notice any of these conditions:

- Localized wear or grooving that is greater than 3.2 mm | 1/8 in. deep
- Pitting that is greater than 3.2 mm | 1/8 in. deep
- Irregularities in the casing-gasket seat surface

Casing areas to inspect

The arrows point to the areas to inspect for wear on the casing:

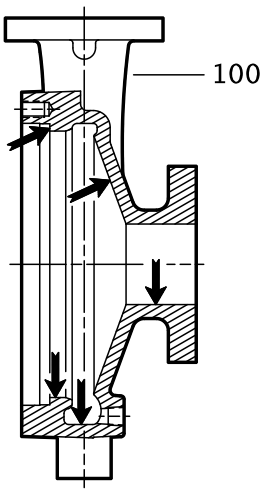

Figure 77: 3196, HT 3196, LF 3196, NM 3196, and 3198 casing

Impeller replacement

This table shows the criteria for replacing the impeller:

Impeller parts	When to replace
Impeller vanes	• When grooved deeper than 1.6 mm | 1/16 in., or • When worn evenly more than 0.8 mm | 1/32 in.
Pumpout vanes	When worn or bent more than 0.8 mm | 1/32 in.
Vane edges	When you see cracks, pitting, or corrosion damage

Impeller areas to inspect

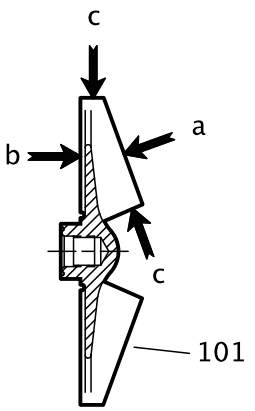

Figure 78: Areas to inspect for wear on the 3196 impeller.

Frame adapter check and replacement

- Replace the frame adapter if it has cracks or excessive corrosion damage.
- Make sure the gasket surface is clean.

Dynamic-seal repeller replacement

This table shows the criteria for replacing dynamic-seal repeller parts for the 3196, CV 3196, and LF 3196 pump models.

Dynamic seal part	When to replace
Dynamic-seal repeller vane	The grooves are deeper than 1.6 mm | 1/16 in. or are worn evenly more than 0.8 mm | 1/32 in..
Sleeve surface	The surface has grooves, pitting, or other damage.

Labyrinth seal replacement

Replace the labyrinth-seal O-ring if it has cuts and cracks.

Gaskets, O-rings, and seats replacement

WARNING:
Avoid death or serious injury. Leaking fluid can cause fire and/or burns. Replace any damaged or worn gaskets/o-rings.

- Replace all gaskets and O-rings at each overhaul and disassembly.
- Inspect the seats. They must be smooth and free of physical defects.
  In order to repair worn seats, skin cut them in a lathe while you maintain dimensional relationships with other surfaces.
- Replace parts if the seats are defective.

Shaft and sleeve replacement guidelines

Two types of sleeves

The 3198 is offered with either a metallic sleeve that uses the standard 3196 shaft or a Teflon sleeve. The Teflon sleeve requires a special shaft and a different inboard labyrinth oil seal.

Shaft measurements check

Replace the shaft (122) if any measurements exceed acceptable values. See Bearing fits and tolerances.

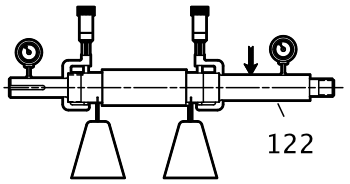

Figure 79: Shaft measurements check

Straightness check

Replace the shaft (122) if runout exceeds the values in this table:

Table 13: Shaft runout tolerances for sleeve fit and coupling fit

	Sleeve fit in millimeters | inches	Coupling fit in millimeters | inches
With sleeve	0.025 | 0.001	0.025 | 0.001
Without sleeve	0.051 | 0.002	0.025 | 0.001

Shaft and sleeve check

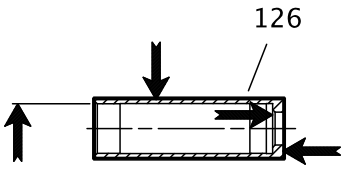

Figure 80: Shaft and sleeve check

- Check the shaft and sleeve (126) surface for grooves and pitting.
- Replace the shaft and sleeve if any grooves or pits are found.

Bearing-frame inspection

Checklist

Check the bearing frame for these conditions:

- Visually inspect the bearing frame and frame foot for cracks.
- Check the inside surfaces of the frame for rust, scale, or debris. Remove all loose and foreign material.
- Make sure that all lubrication passages are clear.
- If the frame has been exposed to pumped fluid, inspect the frame for corrosion or pitting.
- Inspect the inboard-bearing bores.
  If any bores are outside the measurements in the Bearing fits and tolerances table, replace the bearing frame.

Surface inspection locations

This figure shows the areas to inspect for wear on the bearing frame outside surface.

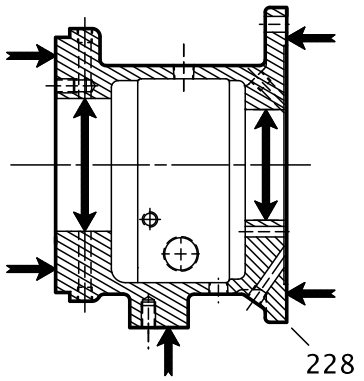

Figure 81: Outside surface inspection locations

This figure shows the areas to inspect for wear on the bearing frame inside surface.

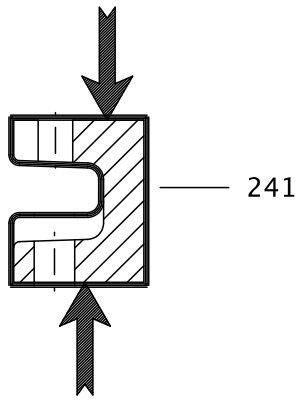

Figure 82: Inside surface inspection locations

C-face adapter inspection

Checklist

- Visually inspect the C-face adapter (340) for cracks.
- Check all surfaces for rust, scale, or debris and remove all loose and foreign material.
- Check for corrosion or pitting.

This figure shows the areas to inspect for cracks on the C-face adapter.

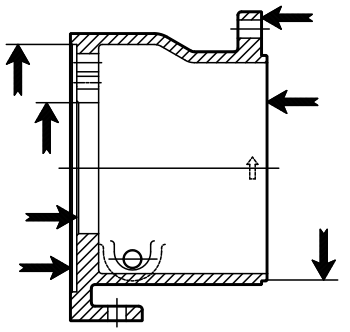

Figure 83: C-face adapter inspection locations

Seal chamber and stuffing box cover inspection

Checklist

Perform these checks when you inspect the seal chamber and stuffing box cover:

- Make sure that these surfaces are clean:
  - Seal chamber and stuffing box cover
  - Dynamic-seal backplate gasket
  - Mounting
- Make sure there is no pitting or wear greater than 3.2 mm | 1/8 in. deep. Replace the seal chamber and stuffing box cover if pitting or wear exceeds this measurement.
- Inspect the machined surfaces and mating faces noted in the figures.

These images point to the areas to inspect:

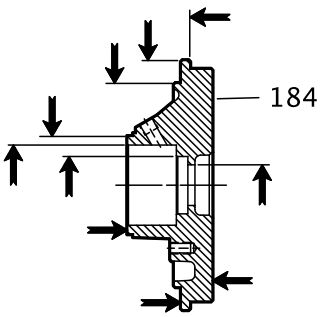

Figure 84: BigBore™ chamber

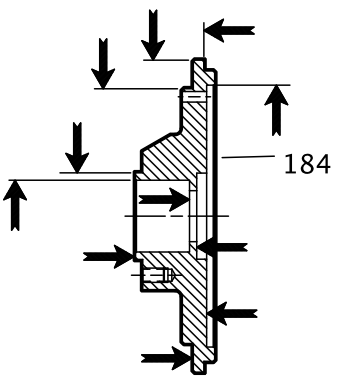

Figure 85: Stuffing box cover

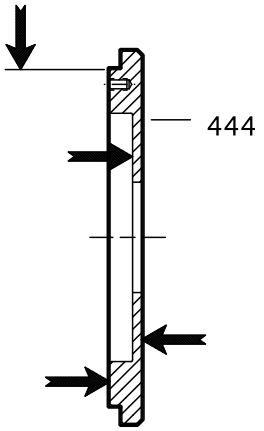

Figure 86: Dynamic-seal backplate

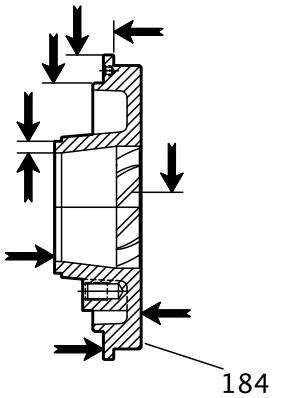

Figure 87: TaperBore™ Plus

Bearings inspection

Condition of bearings

Do not reuse bearings. The condition of the bearings provides useful information on operating conditions in the bearing frame.

Checklist

Perform these checks when you inspect the bearings:

- Inspect the bearings for contamination and damage.
- Note any lubricant condition and residue.
- Inspect the ball bearings to see if they are loose, rough, or noisy when you rotate them.
- Investigate any bearing damage to determine the cause. If the cause is not normal wear, correct the issue before you return the pump to service.

Bearing-housing inspection

Checklist

- Inspect the bearing-housing (134) bore according to the bearing fits and tolerances table.

- Replace the bearing housing if the dimensions exceed acceptable values. Reference: see Bearings fits and tolerances.
- Visually inspect the bearing housing for cracks and pits.

Checklist for specific models

This table shows bearing-housing checks that are required for specific models of pump.

Frame	Bearing-housing check
STi and MTi	Ensure that the snap-ring groove is not cracked.
LTi	Clear all grooves and holes.
XLT-i and i17	Clean the gasket surface.

Inspection locations

The following images point to the areas to inspect on the bearing housing.

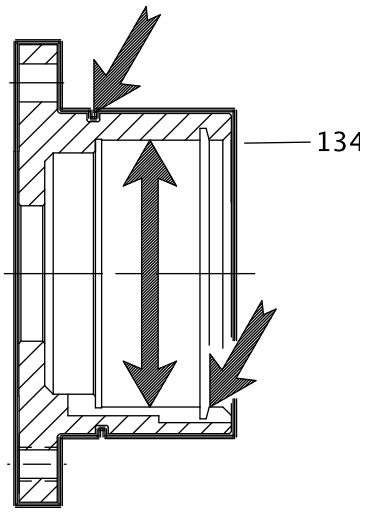

Figure 88: STi and MTi bearing housing

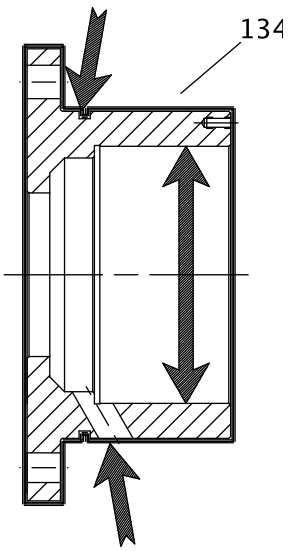

Figure 89: LTi bearing housing

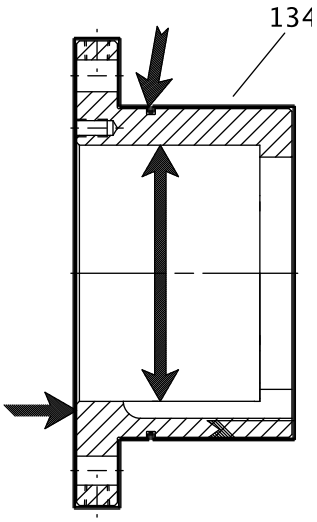

Figure 90: XLT-i and i17 bearing housing

Bearing fits and tolerances

Table 14: Bearing fits and tolerances table

This table references the bearing fits and tolerances according to the ABEC I standard.

	STi millimeters | inches	MTi millimeters | inches	LTi millimeters | inches	XLT-i, i-17 millimeters | inches
Shaft OD Inboard	35.014 | 1.3785 35.004 | 1.3781	45.014 | 1.7722 45.004 | 1.7718	55.016 | 2.1660 55.004 | 2.1655	65.016 | 2.5597 65.004 | 2.5592
Clearance	0.025 | 0.0010 tight 0.003 | 0.0001 tight	0.025 | 0.0010 tight 0.003 | 0.0001 tight	0.030 | 0.0012 tight 0.003 | 0.0001 tight	0.030 | 0.0012 tight 0.003 | 0.0001 tight
Bearing ID Inboard	35.001 | 1.3780 34.989 | 1.3775	45.001 | 1.7717 44.988 | 1.7712	55.001 | 2.1654 54.986 | 2.1648	65.001 | 2.5591 64.986 | 2.5585
Frame ID Inboard	72.000 | 2.8346 72.017 | 2.8353	100.000 | 3.9370 100.023 | 3.9379	120.000 | 4.7244 120.023 | 4.7253	140.000 | 5.5118 140.025 | 5.5128
Clearance	0.031 | 0.0012 loose 0.000 | 0.0000 loose	0.038 | 0.0015 loose 0.000 | 0.0000 loose	0.038 | 0.0015 loose 0.000 | 0.0000 loose	0.043 | 0.0017 loose 0.000 | 0.0000 loose
Bearing OD Inboard	72.000 | 2.8346 71.986 | 2.8341	100.000 | 3.9370 99.985 | 3.9364	120.000 | 4.7244 119.985 | 4.7238	140.000 | 5.5118 139.982 | 5.5111
Shaft OD Outboard	30.010 | 1.1815 30.002 | 1.1812	45.014 | 1.7722 45.004 | 1.7718	50.013 | 1.9690 50.003 | 1.9686	65.016 | 2.5597 65.004 | 2.5592
Clearance	0.020 | 0.0008 tight 0.003 | 0.0001 tight	0.025 | 0.0010 tight 0.003 | 0.0001 tight	0.025 | 0.0010 tight 0.003 | 0.0001 tight	0.030 | 0.0012 tight 0.003 | 0.0001 tight
Bearing OD Outboard	30.000 | 1.1811 29.990 | 1.1807	45.001 | 1.7717 44.988 | 1.7712	50.000 | 1.9685 49.987 | 1.9680	65.001 | 2.5591 64.986 | 2.5585
Housing OD Outboard	72.000 | 2.8346 72.017 | 2.8353	100.000 | 3.9370 100.022 | 3.9379	110.000 | 4.3307 110.023 | 4.3316	140.000 | 5.5118 140.025 | 5.5128
Clearance	0.031 | 0.0012 loose 0.000 | 0.0000 loose	0.038 | 0.0015 loose 0.000 | 0.0000 loose	0.038 | 0.0015 loose 0.000 | 0.0000 loose	0.043 | 0.0017 loose 0.000 | 0.0000 loose
Bearing OD Outboard	72.000 | 2.8346 71.986 | 2.8341	100.000 | 3.9370 99.985 | 3.9364	110.000 | 4.3307 109.985 | 4.3301	140.000 | 5.5118 139.982 | 5.5111

Reassembly

Assemble the rotating element and the bearing frame (STi and MTi)

CAUTION:
Wear insulated gloves when you use a bearing heater. Bearings get hot and can cause physical injury.

NOTICE:
Make sure that the pipe threads are clean, and that you apply thread sealant to the plugs and fittings. Failure to do so may result in equipment damage or decreased performance.

NOTICE:
Use an induction heater that heats as well as demagnetizes the bearings when you install bearings. Failure to do so may result in decreased performance.

1. Prepare the bearing frame (228) as follows (see the illustration):
   a) Install the oil-fill plug (113A).
   b) Install the oil-drain plug (408A).
   c) Install the sight glass (319).
   d) Install the sight oiler plug (408J).
   e) Install the plug for the oil-cooler inlet (408L).
   f) Install the plug for the oil-cooler outlet (408M).
   g) Install four oil-mist connection plugs (408H).
      Or: Install two grease fittings (193) and two grease-relief plugs (113).
   h) Attach the bearing-frame foot (241) and fasten the bolts (370F) by hand.

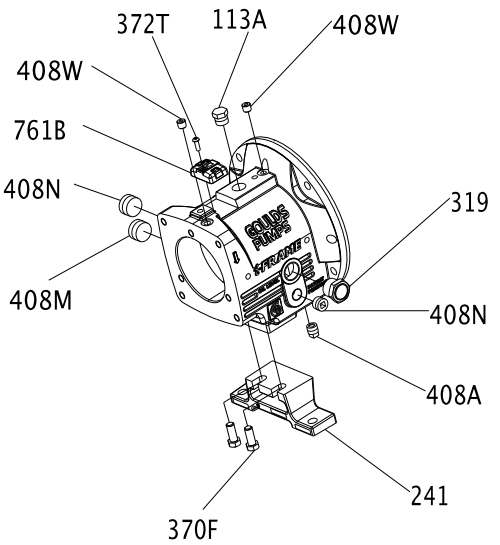

Figure 91: Oil mist connection plugs

2. Install the outboard bearing (112A) on the shaft (122).
   The regreaseable bearing has a single shield. The outboard bearing is installed with the shield toward the impeller.
   a) Inspect the shaft (122) to ensure that it is clean, dimensionally correct, and is free of nicks and burrs.
   b) Lightly coat the bearing seating with a thin film of oil.
   c) Remove the bearing (112) from its packaging.
   d) Wipe the preservative from the bearing (112) bore and outer diameter.
   e) Use an induction heater with a demagnetizing cycle to heat the bearing (112) to an inner ring temperature of 110 °C | 230 °F.
   f) Position the bearing (112) on the shaft (122) against the shoulder and snug the locknut (136) against the bearing until it is cool.
      The locknut prevents the bearing from moving away from the shaft shoulder as it cools.
   g) Remove the bearing locknut (136) after the bearing (112) cools.
3. Put the lockwasher (382) onto the shaft (122).

4. Thread the locknut (136) onto the shaft (122) and tighten it until it is snug.
5. Bend the tangs of the lockwasher into the slots of the locknut.
6. Put the bearing-retaining ring (361A) onto the shaft (122).
   Make sure that the flat side of the ring is towards the bearing.
7. Coat the inner surfaces of the bearings with lubricant.
8. Put the inboard bearing (168) onto the shaft (122).
   The regreasable bearing has a single shield. Make sure that the bearing is installed with the shield away from the impeller.

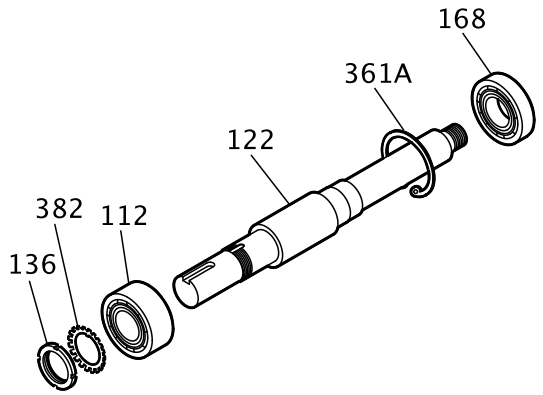

Figure 92: Inboard bearing reassembly

9. Prepare the shaft for assembly as follows (see the illustration):
   a) Install a new O-ring (496).
   b) Coat the outside of the outboard bearing (112A) with oil.
   c) Coat the bore of the bearing housing (134) with oil.
   d) Put the bearing housing (134) onto the shaft.
      Do not use force.
   e) Insert the bearing-retaining ring (361A) into the bore groove of the bearing housing (134).

   NOTICE:
   Ensure that the space between the ends of the retaining ring are located in the oil-return groove. Failure to do so may result in oil-flow obstruction.

   Make sure that the shaft rotates freely.
   f) Install the outboard labyrinth oil-seal (332A) into the bearing housing (134).
      Place the drain slots of the oil seal at the bottom position (6 o'clock).
      Make sure that the edges of the keyway are free from burrs. To protect the O-ring, cover the keyway lengthwise with a piece of electrical tape before you install the oil seal.

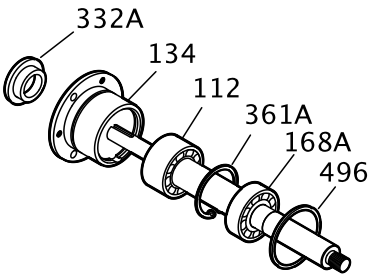

Figure 93: Outboard labyrinth oil-seal reassembly

10. Install the shaft assembly into the bearing frame as follows (see the illustration):
    a) Coat the outside of the bearing housing (134) with oil.

b) Coat all the internal surfaces of the bearing frame (228) with oil.
c) Install the shaft assembly into the bearing frame (228).
Make sure that the shaft rotates freely.
d) Install the clamp bolts (370C) in the bearing housing (134) and tighten by hand.
e) Install the jack bolts (370D) with the locknuts (423) in the bearing housing (134) and tighten by hand.

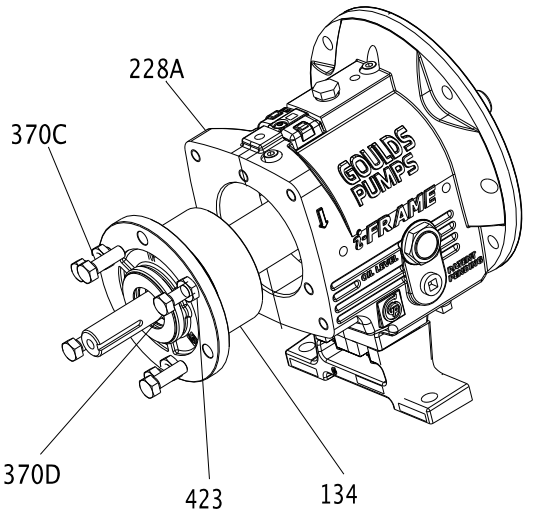

Figure 94: Jack bolt and locknut reassembly

Assemble the rotating element and the bearing frame (STi and MTi with duplex bearings)

CAUTION:
- Wear insulated gloves when you use a bearing heater. Bearings get hot and can cause physical injury.
- Use care when you handle the shaft because it can be heavy. Failure to do so could result in personal injury.

NOTICE:
Make sure that the pipe threads are clean, and that you apply thread sealant to the plugs and fittings. Failure to do so may result in equipment damage or decreased performance.

NOTICE:
Use an induction heater that heats as well as demagnetizes the bearings when you install bearings. Failure to do so may result in decreased performance.

1. Prepare the bearing frame (228) as follows (see the illustration):
   a) Install the oil-fill plug (113A).
   b) Install the oil-drain plug (408A).
   c) Install the sight glass (319).
   d) Install the sight oiler plug (408J).
   e) Install the plug for the oil-cooler inlet (408L).
   f) Install the plug for the oil-cooler outlet (408M).
   g) Install four oil-mist connection plugs (408H).
   Or: Install two grease fittings (193) and two grease-relief plugs (113).

h) Attach the bearing-frame foot (241) and fasten the bolts (370F) by hand.

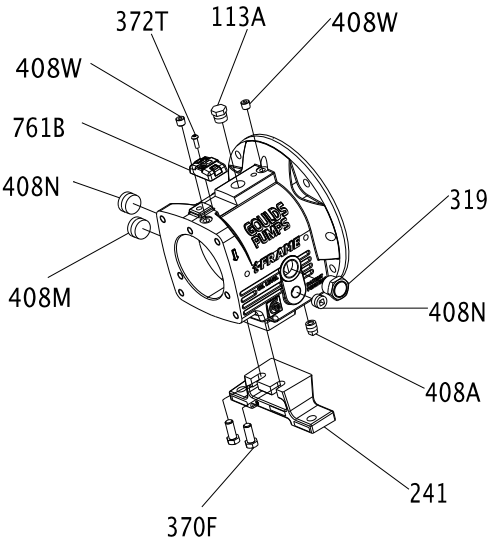

Figure 95: Bearing frame foot reassembly

2. Install the outboard bearings (112A) on the shaft (122).
   The regreasable bearing has a single shield. Make sure that the bearing is installed with the shield away from the impeller.
   The duplex bearings are mounted back-to-back. Make sure that the orientation of the bearings are correct.
   a) Inspect the shaft (122) to ensure that it is clean, dimensionally correct, and is free of nicks and burrs.

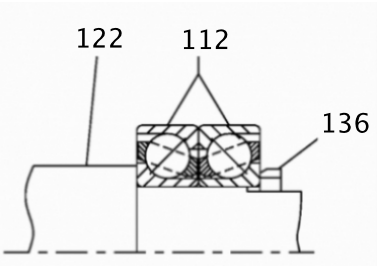

Figure 96: Shaft inspection

   b) Lightly coat the bearing seating with a thin film of oil.
   c) Remove the bearings (112) from their packaging.
   d) Wipe the preservative from the bearing (112) bore and outer diameter.
   e) Use an induction heater with a demagnetizing cycle to heat both bearings (112) to an inner ring temperature of 110 °C | 230 °F.
   f) Place both bearings (112) on the shaft (122) with the large outer races together (back-to-back).
   g) Position the bearings (112) on the shaft (122) against the shoulder and snug the locknut (136) against the bearings until they are cool.
      The locknut prevents the bearings from moving away from the shaft shoulder as they cool. Rotate the outer bearing rings relative to each other as they are placed on the shaft to assure good alignment.
   h) Remove the bearing locknut (136) after the bearings (112) are cool.
3. Put the lockwasher (382) onto the shaft (122).
4. Thread the locknut (136) onto the shaft (122) and tighten it until it is snug.
5. Bend the tangs of the lockwasher into the slots of the locknut.
6. Place the bearing-clamp ring (253B) onto the shaft (122).

Make sure that the orientation of the bearing-clamp ring is correct.

7. Coat the inner surfaces of the bearings with lubricant.
8. Put the inboard bearing (168) onto the shaft (122).

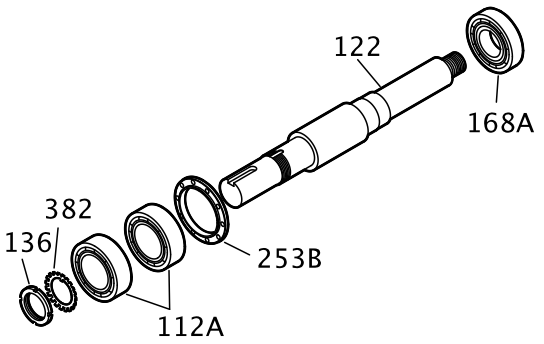

Figure 97: Inboard bearing reassemby

9. Install the bearing housing as follows (see the illustration):
   a) Coat the outside of the outboard bearing (112A) with oil.
   b) Coat the bore of the bearing housing (134) with oil.
   c) Put the bearing housing (134) onto the shaft.
      Do not use force.

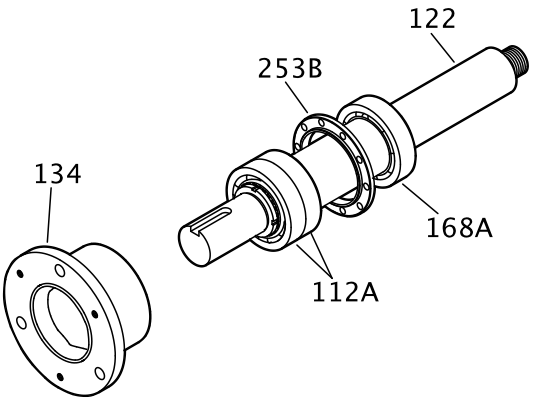

Figure 98: Bearing housing reassembly

10. Prepare the shaft for assembly as follows (see the illustration):
    a) Place the bearing-clamp ring (253B) onto the shaft (122).
    b) Fasten the clamp-ring bolts (236A) crosswise.
       See the specified torque values.
       Make sure that the shaft rotates freely.
    c) Install a new O-ring (496).

d) Install the outboard labyrinth oil-seal (332A) into the bearing housing (134).
Place the drain slots of the oil seal at the bottom position (6 o'clock).
Make sure that the edges of the keyway are free from burrs. To protect the O-ring, cover the keyway lengthwise with a piece of electrical tape before you install the oil seal.

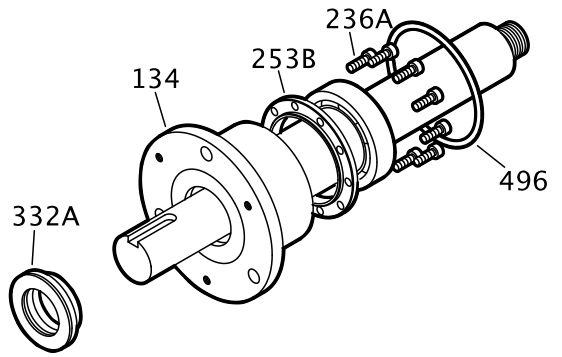

Figure 99: Outboard labyrinth oil seal reassembly

11. Install the shaft assembly into the bearing frame as follows (see the illustration):
    a) Coat the outside of the bearing housing (134) with oil.
    b) Coat all the internal surfaces of the bearing frame (228) with oil.
    c) Install the shaft assembly into the bearing frame (228).
    Make sure that the shaft rotates freely.
    d) Install the clamp bolts (370C) in the bearing housing (134) and tighten by hand.
    e) Install the jack bolts (370D) with the locknuts (423) in the bearing housing (134) and tighten by hand.

Assemble the rotating element and the bearing frame (LTi)

CAUTION:
Wear insulated gloves when you use a bearing heater. Bearings get hot and can cause physical injury.

NOTICE:
Make sure that the pipe threads are clean, and that you apply thread sealant to the plugs and fittings. Failure to do so may result in equipment damage or decreased performance.

NOTICE:
Use an induction heater that heats as well as demagnetizes the bearings when you install bearings. Failure to do so may result in decreased performance.

1. Prepare the bearing frame (228) as follows (see the illustration):
    a) Install the oil-fill plug (113A).
    b) Install the oil-drain plug (408A).
    c) Install the sight glass (319).
    d) Install the sight oiler plug (408J).
    e) Install the plug for the oil-cooler inlet (408L).
    f) Install the plug for the oil-cooler outlet (408M).
    g) Install four oil-mist connection plugs (408H).
    Or: Install two grease fittings (193) and two grease-relief plugs (113).

h) Attach the bearing-frame foot (241) and fasten the bolts (370F) by hand.

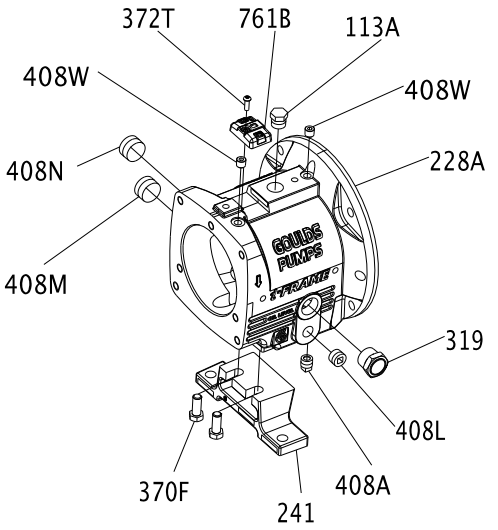

Figure 100: Attach the bearing-frame foot

2. Install the oil flinger (248A) onto the shaft (122).

NOTICE:
The oil flinger is press fitted onto the shaft. Use a properly sized driver. Failure to do so may result in damage to the oil flinger.

3. Place the bearing-clamp ring (253B) onto the shaft (122).
   Make sure that the orientation of the bearing-clamp ring is correct.
4. Install outboard bearings (112A) on shaft (122).
   The regreasable bearing has a single shield. Make sure that the bearing is installed with the shield away from the impeller.
   The duplex bearings are mounted back-to-back. Make sure that the orientation of the bearings are correct.
   a) Inspect the shaft (122) to ensure that it is clean, dimensionally correct, and is free of nicks and burrs.

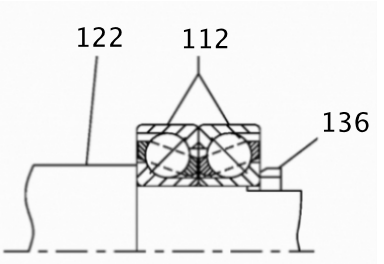

Figure 101: Shaft inspection

   b) Lightly coat the bearing seating with a thin film of oil.
   c) Remove the bearings (112) from their packaging.
   d) Wipe the preservative from the bearing (112) bore and outer diameter.
   e) Use an induction heater with a demagnetizing cycle to heat both bearings (112) to an inner ring temperature of 110 °C | 230 °F.
   f) Place both bearings (112) on the shaft (122) with the large outer races together (back-to-back).

g) Position the bearings (112) on the shaft (122) against the shoulder and snug the locknut (136) against the bearings until they are cool.
The locknut prevents the bearings from moving away from the shaft shoulder as they cool. Rotate the outer bearing rings relative to each other as they are placed on the shaft to assure good alignment.

h) Remove the bearing locknut (136) after the bearings (112) are cool.

5. Put the lockwasher (382) onto the shaft (122).
6. Thread the locknut (136) onto the shaft (122) and tighten it until it is snug.
7. Bend the tangs of the lockwasher into the slots of the locknut.
8. Coat the inner surfaces of the bearings with lubricant.
9. Put the inboard bearing (168) onto the shaft (122).

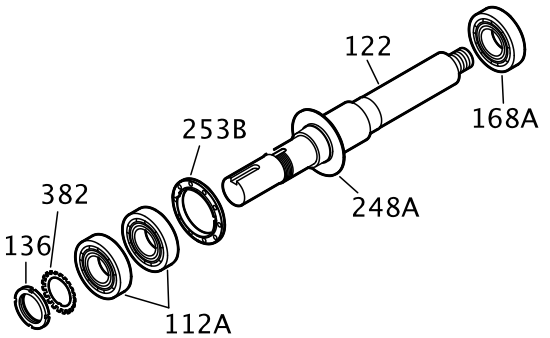

Figure 102: Inboard bearing reassembly

10. Install the bearing housing as follows (see the illustration):
    a) Coat the outside of the outboard bearing (112A) with oil.
    b) Coat the bore of the bearing housing (134) with oil.
    c) Put the bearing housing (134) onto the shaft.
    Do not use force.

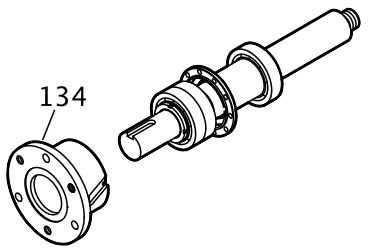

Figure 103: Bearing housing reassembly

11. Prepare the shaft for assembly as follows (see the illustration):
    a) Fasten the clamp-ring bolts (236A) crosswise.
    See the specified torque values.
    Make sure that the shaft rotates freely.
    b) Install a new O-ring (496).

c) Install the outboard labyrinth oil-seal (332A) into the bearing housing (134).
Place the drain slots of the oil seal at the bottom position (6 o'clock).
Make sure that the edges of the keyway are free from burrs. To protect the O-ring, cover the keyway lengthwise with a piece of electrical tape before you install the oil seal.

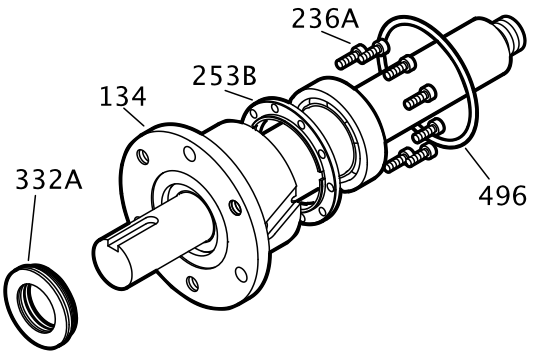

Figure 104: Outboard labyrinth oil-seal reassembly

12. Install the shaft assembly into the bearing frame as follows (see the illustration):
    a) Coat the outside of the bearing housing (134) with oil.
    b) Coat all the internal surfaces of the bearing frame (228) with oil.
    c) Install the shaft assembly into the bearing frame (228).
    Make sure that the shaft rotates freely.
    d) Install the clamp bolts (370C) in the bearing housing (134) and tighten by hand.
    e) Install the jack bolts (370D) with the locknuts (423) in the bearing housing (134) and tighten by hand.

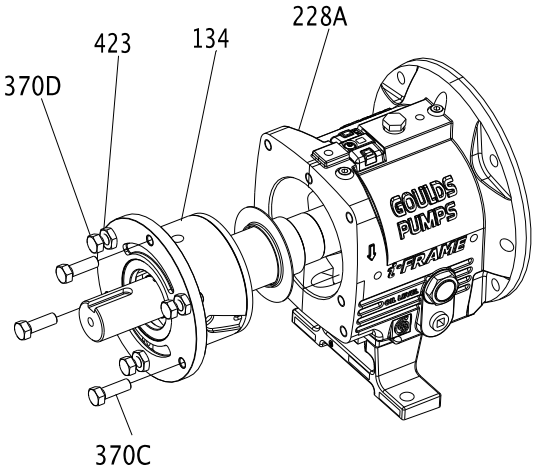

Figure 105: Jack bolt and locknut installation

Assemble the rotating element and the bearing frame (XLT-i and i17)

CAUTION:
- Wear insulated gloves when you use a bearing heater. Bearings get hot and can cause physical injury.
- Use care when you handle the shaft because it can be heavy. Failure to do so could result in personal injury.

NOTICE:
Make sure that the pipe threads are clean, and that you apply thread sealant to the plugs and fittings. Failure to do so may result in equipment damage or decreased performance.

NOTICE:
Use an induction heater that heats as well as demagnetizes the bearings when you install bearings. Failure to do so may result in decreased performance.

1. Prepare the bearing frame (228) as follows (see the illustration):
   a) Install the oil-fill plug (113A).
   b) Install the oil-drain plug (408A).
   c) Install the sight glass (319).
   d) Install the sight oiler plug (408J).
   e) Install the plug for the oil-cooler inlet (408L).
   f) Install the plug for the oil-cooler outlet (408M).
   g) Install four oil-mist connection plugs (408H).
      Or: Install two grease fittings (193) and two grease-relief plugs (113).

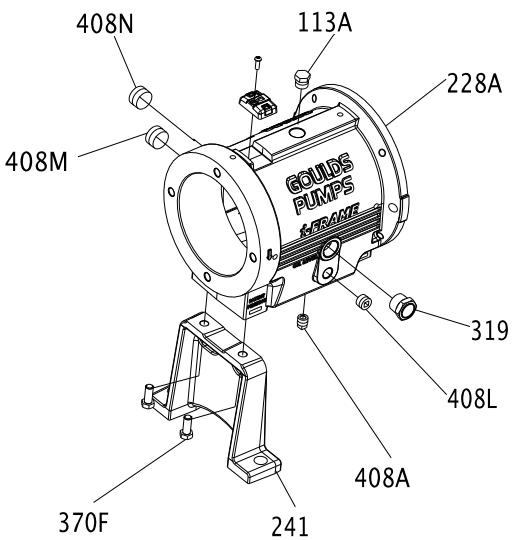

2. Install the outboard bearings (112A) on the shaft (122).
   The regreaseable bearing has a single shield. The outboard bearing is installed with the shield toward the impeller.
   a) Inspect the shaft (122) to ensure that it is clean, dimensionally correct, and is free of nicks and burrs.
   b) Lightly coat the bearing seating with a thin film of oil.
   c) Remove the bearing (112) from its packaging.
   d) Wipe the preservative from the bearing (112) bore and outer diameter.
   e) Use an induction heater with a demagnetizing cycle to heat the bearing (112) to an inner ring temperature of 110 °C | 230 °F.
   f) Position the bearing (112) on the shaft (122) against the shoulder and snug the locknut (136) against the bearing until it is cool.
      The locknut prevents the bearing from moving away from the shaft shoulder as it cools.
   g) Remove the bearing locknut (136) after the bearing (112) cools.
3. Put the lockwasher (382) onto the shaft (122).
4. Thread the locknut (136) onto the shaft (122) and tighten it until it is snug.

5. Bend the tangs of the lockwasher into the slots of the locknut.

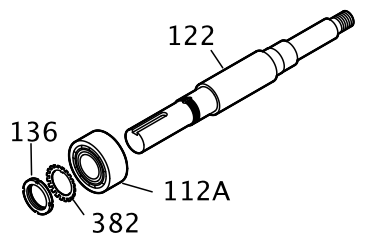

6. Install the bearing housing as follows (see the illustration):
   a) Coat the outside of the outboard bearing (112A) with oil.
   b) Coat the bore of the bearing housing (134) with oil.
   c) Put the bearing housing (134) onto the shaft.
   Do not use force.

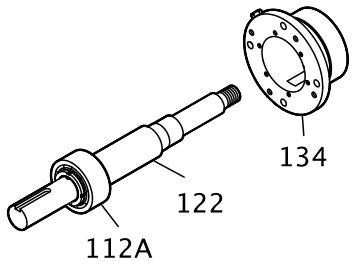

7. Fasten the gasket (360C) and the end cover (109A) with the bolts (371C).
   See the specified torque values.
   Make sure that the shaft rotates freely.

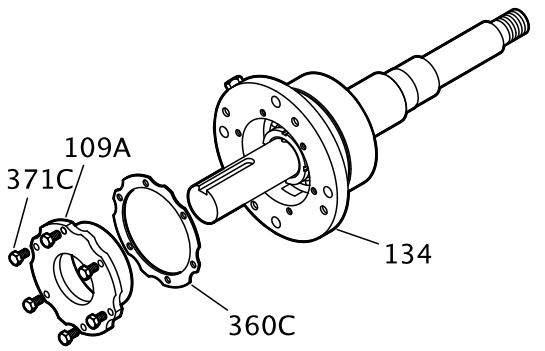

8. Install the inboard bearing as follows (see the illustration):
   a) Coat the inner surfaces of the bearings with lubricant.
   b) Put the inboard bearing (168) onto the shaft (122).
   The regreasable bearing has a single shield. Make sure that the bearing is installed with the shield away from the impeller.

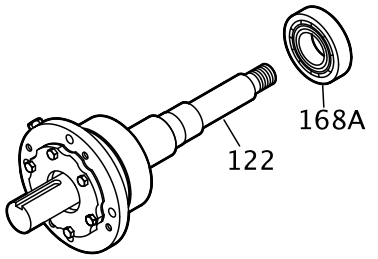

9. Install the remaining parts onto the bearing shaft as follows (see the illustration):
   a) Install a new O-ring (496).
   b) Install the outboard labyrinth oil-seal (332A) into the end cover (109A).
      Place the drain slots of the oil seal at the bottom position (6 o'clock).
      Make sure that the edges of the keyway are free from burrs. To protect the O-ring, cover the keyway lengthwise with a piece of electrical tape before you install the oil seal.

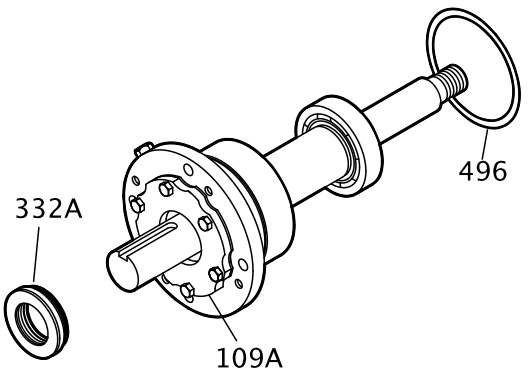

10. Install the shaft assembly into the bearing frame as follows (see the illustration):
    a) Coat the outside of the bearing housing (134) with oil.
    b) Coat all the internal surfaces of the bearing frame (228) with oil.
    c) Install the shaft assembly into the bearing frame (228).
       Make sure that the shaft rotates freely.
    d) Install the clamp bolts (370C) in the bearing housing (134) and tighten by hand.
    e) Install the jack bolts (370D) with the locknuts (423) in the bearing housing (134) and tighten by hand.
    f) Attach the bearing-frame foot (241) and fasten the bolts (370F) by hand.

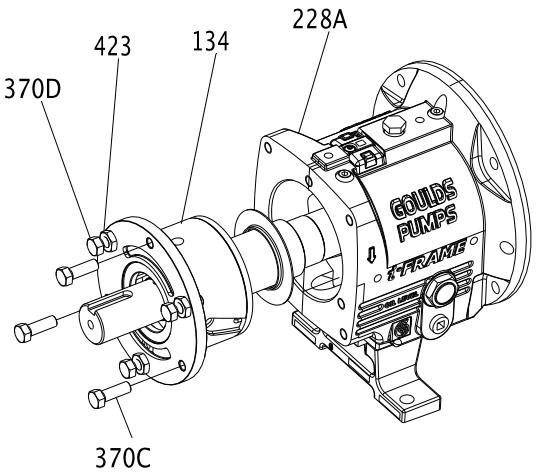

Assemble the rotating element and the bearing frame (XLT-i and i17 with duplex bearings)

CAUTION:

- Wear insulated gloves when you use a bearing heater. Bearings get hot and can cause physical injury.
- Use care when you handle the shaft because it can be heavy. Failure to do so could result in personal injury.

NOTICE:
Make sure that the pipe threads are clean, and that you apply thread sealant to the plugs and fittings. Failure to do so may result in equipment damage or decreased performance.

NOTICE:
Use an induction heater that heats as well as demagnetizes the bearings when you install bearings. Failure to do so may result in decreased performance.

1. Prepare the bearing frame (228) as follows (see the illustration):
   a) Install the oil-fill plug (113A).
   b) Install the oil-drain plug (408A).
   c) Install the sight glass (319).
   d) Install the sight oiler plug (408J).
   e) Install the plug for the oil-cooler inlet (408L).
   f) Install the plug for the oil-cooler outlet (408M).
   g) Install four oil-mist connection plugs (408H).
      Or: Install two grease fittings (193) and two grease-relief plugs (113).

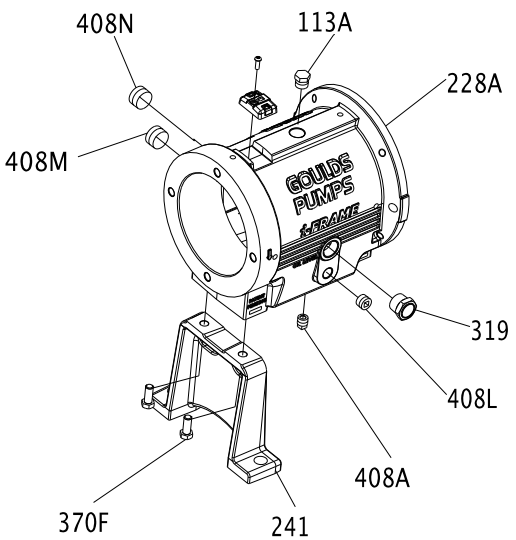

2. Install the outboard bearings (112A) on the shaft (122).
   The regreasable bearing has a single shield. Make sure that the bearing is installed with the shield away from the impeller.
   The duplex bearings are mounted back-to-back. Make sure that the orientation of the bearings are correct.
   a) Inspect the shaft (122) to ensure that it is clean, dimensionally correct, and is free of nicks and burrs.

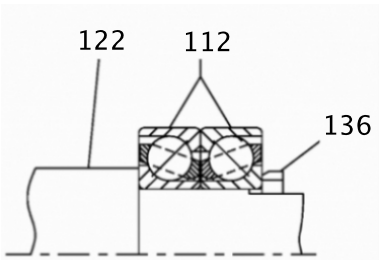

Figure 106: Shaft inspection

b) Lightly coat the bearing seating with a thin film of oil.
c) Remove the bearings (112) from their packaging.
d) Wipe the preservative from the bearing (112) bore and outer diameter.
e) Use an induction heater with a demagnetizing cycle to heat both bearings (112) to an inner ring temperature of 110 °C | 230 °F.
f) Place both bearings (112) on the shaft (122) with the large outer races together (back-to-back).
g) Position the bearings (112) on the shaft (122) against the shoulder and snug the locknut (136) against the bearings until they are cool.
The locknut prevents the bearings from moving away from the shaft shoulder as they cool. Rotate the outer bearing rings relative to each other as they are placed on the shaft to assure good alignment.
h) Remove the bearing locknut (136) after the bearings (112) are cool.

3. Put the lockwasher (382) onto the shaft (122).
4. Thread the locknut (136) onto the shaft (122) and tighten it until it is snug.
5. Bend the tangs of the lockwasher into the slots of the locknut.

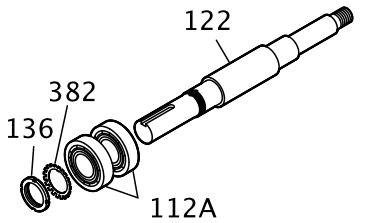

6. Install the bearing housing as follows (see the illustration):
a) Coat the outside of the outboard bearing (112A) with oil.
b) Coat the bore of the bearing housing (134) with oil.
c) Put the bearing housing (134) onto the shaft.
Do not use force.

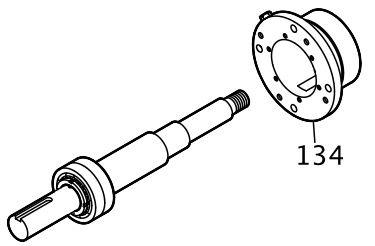

7. Fasten the gasket (360C) and the end cover (109A) with the bolts (371C).
See the specified torque values.
Make sure that the shaft rotates freely.

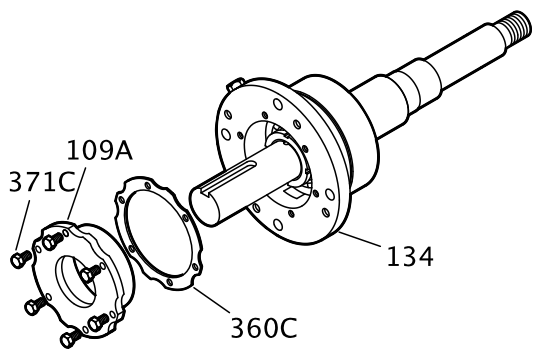

8. Install the inboard bearing as follows (see the illustration):
   a) Coat the inner surfaces of the bearings with lubricant.
   b) Put the inboard bearing (168) onto the shaft (122).
      The regreasable bearing has a single shield. Make sure that the bearing is installed with the shield away from the impeller.

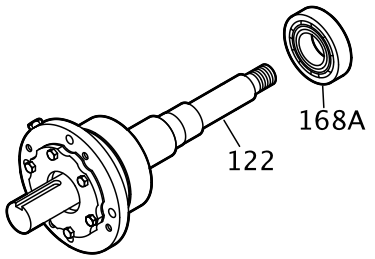

9. Install the remaining parts onto the bearing shaft as follows (see the illustration):
   a) Install a new O-ring (496).
   b) Install the outboard labyrinth oil-seal (332A) into the end cover (109A).
      Place the drain slots of the oil seal at the bottom position (6 o'clock).
      Make sure that the edges of the keyway are free from burrs. To protect the O-ring, cover the keyway lengthwise with a piece of electrical tape before you install the oil seal.

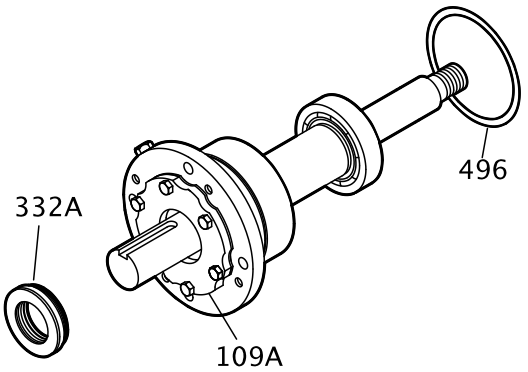

10. Install the shaft assembly into the bearing frame as follows (see the illustration):
    a) Coat the outside of the bearing housing (134) with oil.
    b) Coat all the internal surfaces of the bearing frame (228) with oil.
    c) Install the shaft assembly into the bearing frame (228).
       Make sure that the shaft rotates freely.
    d) Install the clamp bolts (370C) in the bearing housing (134) and tighten by hand.
    e) Install the jack bolts (370D) with the locknuts (423) in the bearing housing (134) and tighten by hand.

f) Attach the bearing-frame foot (241) and fasten the bolts (370F) by hand.

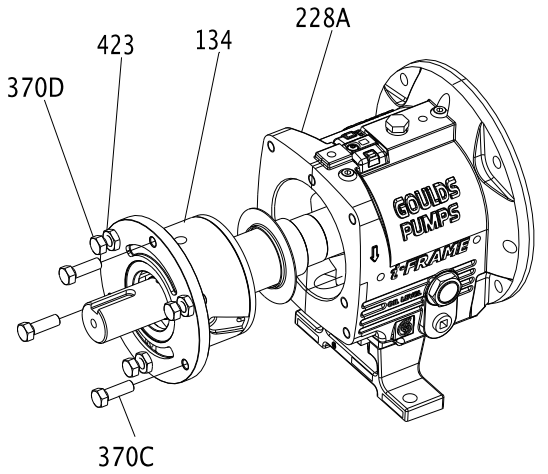

Assemble the frame

1. Support the frame assembly in a horizontal position.
2. Check the shaft-end play by moving the shaft forward and backward by hand, and note any indicator movement.
   If the total indicator reading is greater than the values in this table, then disassemble the shaft and determine the cause.

Table 15: Shaft-end play

Use this table as a reference for shaft-end play values.

Frame	Double row bearing	Duplex bearing
STi millimeters | inches	0.028 | 0.0011 0.048 | 0.0019	0.018 | 0.0007 0.025 | 0.0010
MTi millimeters | inches	0.033 | 0.0013 0.053 | 0.0021	0.023 | 0.0009 0.030 | 0.0012
LTi millimeters | inches	Not applicable	0.025 | 0.0010 0.038 | 0.0015
XLT-i millimeters | inches	0.036 | 0.0014 0.058 | 0.0023	0.025 | 0.0010 0.038 | 0.0015

Frame	Double row bearing	Duplex bearing

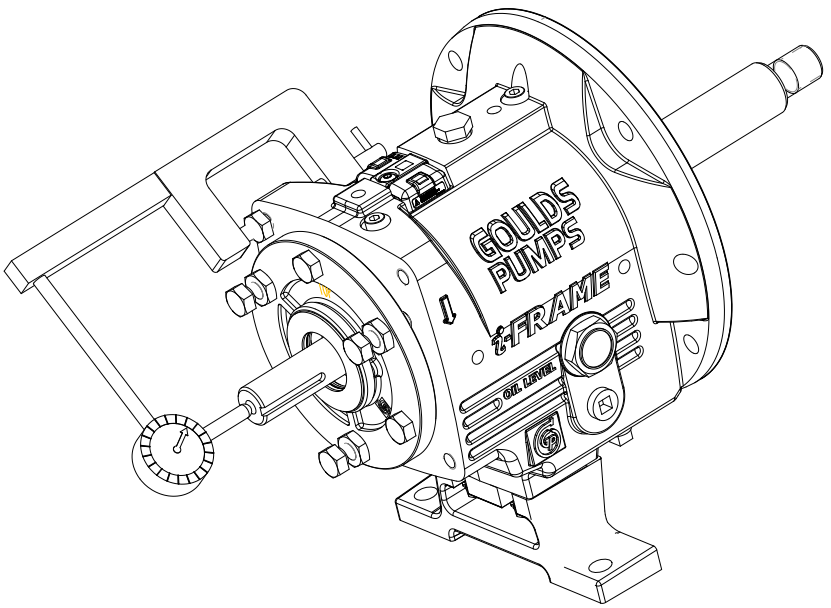

Figure 107: Check shaft end play

3. Check the shaft-sleeve (126) runout.
   a) Install the shaft sleeve.
   b) Thread the impeller on the shaft until hand tight.
   c) Rotate the shaft 360º.
   d) If the total indicator reading is greater than 0.051 mm | 0.002 in., then disassemble the shaft sleeve and determine the cause.

e) Remove the impeller and shaft sleeve.

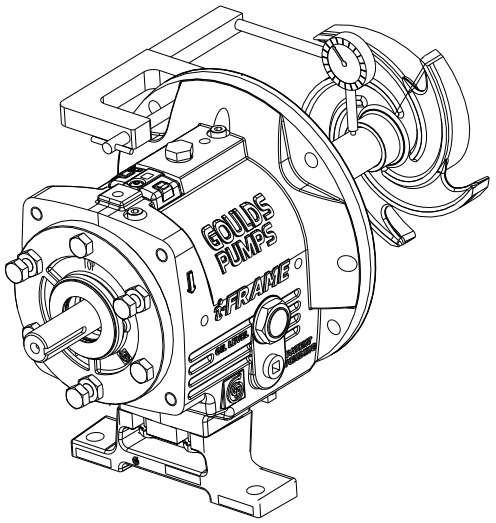

Figure 108: Remove impeller and shaft sleeve

4. Check the frame-face run-out by rotating the shaft so that the indicator measures the fit for 360º.
   If the total indicator reading is greater than 0.025 mm | 0.001 in., then disassemble and determine the cause.

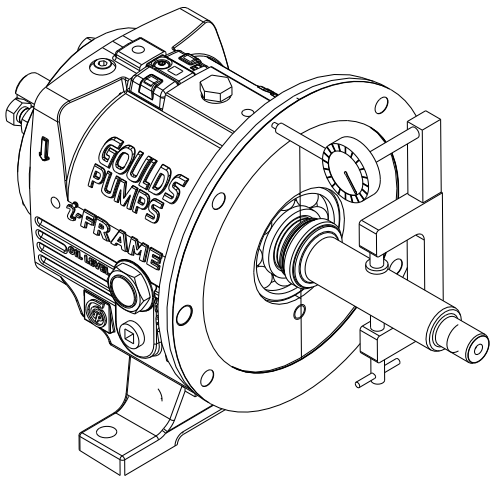

Figure 109: Check frame-face run-out

5. Place the manila gasket (360D) on the frame (228), and hold the gasket in place by inserting the dowel pins (469B) in their holes.
   The gasket is designed to fit only one way.
6. Install the frame adapter.
   a) Place the frame adapter (108) onto the frame assembly.

b) Align the bolt holes and dowel locations on the frame adapter with the bolt holes and dowel locations on the frame.

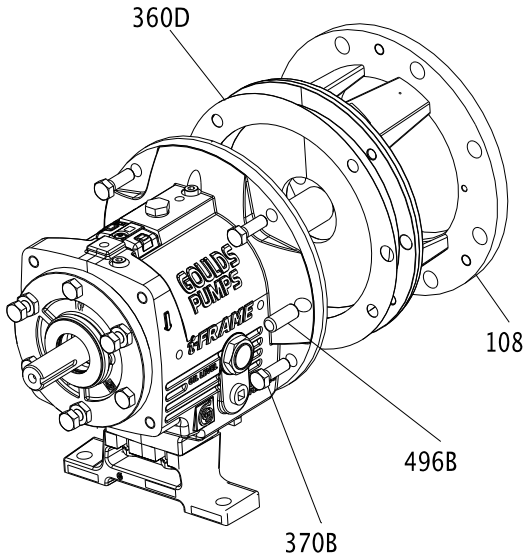

Figure 110: Align bolt holes and dowel locations

c) Install the dowel pins (469B) and bolts (370B). Tighten the bolts in a criss-cross pattern according to the specifications in the bolt torque values table.

d) Rotate the shaft 360º to check the adapter fit.
If the total indicator reading is greater than 0.13 mm | 0.005 in., then determine the cause and correct it before you proceed.

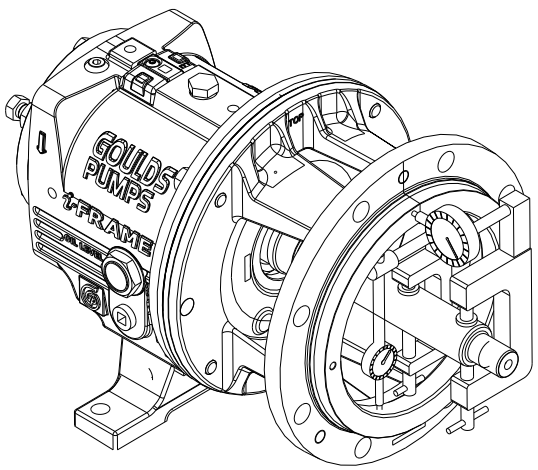

Figure 111: Check adapter fit

7. Install the labyrinth oil-seal (333A) into the adapter (108) and the bearing frame (228). The labyrinth oil seal is an O-ring fit.
8. Position the labyrinth oil-seal drain slots at the bottom (6 o'clock) position.

Refer to Assemble the INPRO labyrinth oil-seal for more information on the labyrinth oil-seal installation.

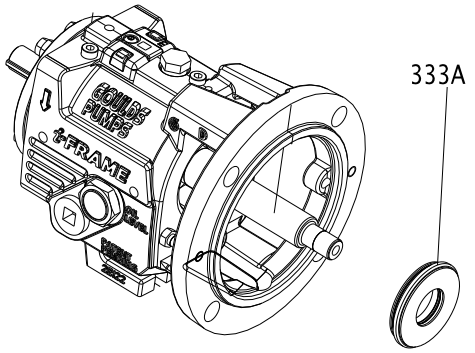

Figure 112: Position labyrinth oil-seal drain slots

INPRO labyrinth oil seal description

Description

The INPRO VBXX-D Labyrinth Oil Seal consists of the rotor (1), the stator (2), and the VBX Ring (3). The rotor (1) fits over the shaft and is held in place by an elastomeric drive ring (4). The drive ring causes the rotor to turn with the shaft and provides a positive, static seal against the shaft. Since there is no metal-to-metal contact, there are no friction or wear concerns.

NOTICE:
The INPRO VBX is a one-piece design. Do not attempt to separate the rotor from the stator before or during installation. Doing so may result in equipment damage.

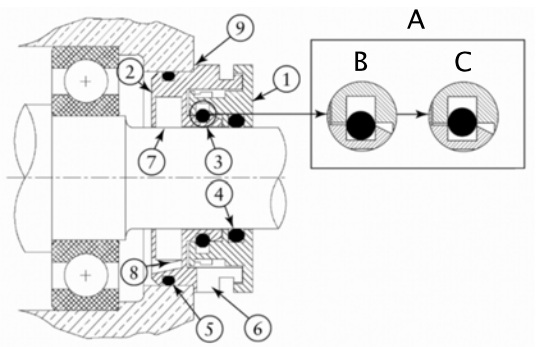

A	"VBX" O-ring action
B	Static
C	Dynamic
1	Rotor
2	Stator
3	"VBX" ring
4	Rotor drive ring
5	Stator gasket
6	Expulsion port
7	D groove
8	Lube return
9	Location shoulder

Figure 113: INPRO labyrinth oil seal

Assemble the INPRO labyrinth oil seal

1. Wrap electrical tape around the coupling end of the shaft to cover the keyway.

NOTICE:
The edges of the keyway can be sharp. Make sure to cover the keyway with tape. Failure to do so may result in cutting the O-ring and damaging the seal.

2. Lightly lube the shaft and the drive ring (4) with lubricant.
   Lubricant helps in the installation process. Be sure that the lubricant is compatible with the O-ring material and the pump-system standards.
3. Use an arbor press to install the outboard INPRO VBXX-D into the bearing cover with the expulsion port (6) at the 6 o'clock position.
   Press the outboard INPRO VBXX-D down to where the stator location ramp (9) starts to avoid angular misalignment. There is a nominal 0.051 mm | 0.002 in. interference fit.
4. Discard any residual material from the stator gasket (5).
5. Complete the applicable step in this table depending on the model of your pump.

Pump model	Action
STi	Press the inboard seal along the shaft into the bearing frame.
All other models	After you install the frame adapter on the bearing frame, press the inboard seal over the shaft and into the adapter.

Assemble the C-face adapter

1. Mount the pump and the motor-coupling hubs if they are not already mounted.
2. Slide the C-face adapter over the pump shaft and mount it against the bearing-frame flange using four bolts.
3. Mount the motor to the C-face adapter using either four or eight motor bolts.

Table 16: Motor-bolt torque values for C-face adapter to frame
This table contains the motor-bolt torque values for assembling the C-face adapter to a frame.

Frame	Lubricated threads	Dry threads
STi	27 Nm | 20 ft-lb	41 Nm | 30 ft-lb
MTi	27 Nm | 20 ft-lb	41 Nm | 30 ft-lb
LTi	27 Nm | 20 ft-lb	41 Nm | 30 ft-lb

Table 17: Motor-bolt torque values for C-face adapter to motor
This table contains the motor-bolt torque values for assembling the C-face adapter to a motor.

Frame	Lubricated threads	Dry threads
143TC-145TC	11 Nm | 8 ft-lb	16 Nm | 12 ft-lb
182TC-286TC	20 ft-lb (27 Nm)	41 Nm | 30 ft-lb
324TC-365TC	39 ft-lb (53 Nm)	80 Nm | 59 ft-lb

Shaft sealing

WARNING:
Ⓔx The mechanical seal used in an Ex-classified environment must be properly certified. Prior to startup, make sure that all areas that could leak pumped fluid to the work environment are closed.

NOTICE:
Ⓔx The mechanical seal must have an appropriate seal-flush system. Failure to do so will result in excess heat generation and seal failure.

Methods for sealing the shaft

These sections discuss the methods that you can use to seal the shaft.

- Seal the shaft with a dynamic seal.
- Seal the shaft with a cartridge-mechanical seal.
- Seal the shaft with a conventional inside-component mechanical seal.
- Seal the shaft with a conventional outside-component mechanical seal.
- Seal the shaft with a packed stuffing box.

Seal the shaft with a dynamic seal

1. Place the backplate (444) with the flat side down on the bench.

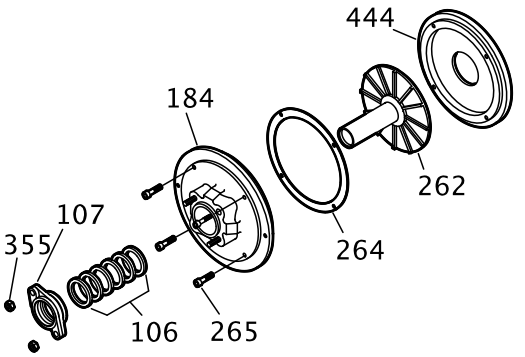

Figure 114: Backplate placement

2. Place the repeller (262) in the backplate (444) with the sleeve side up.
3. Place a Teflon gasket (264) on the backplate (444) and align the holes in the gasket with the holes in the backplate.
4. Place a stuffing-box cover (184) on the backplate (444) and align the holes in the gasket with the holes in the backplate.
5. Install four socket-head capscrews (265) and tighten them securely.
6. Install a new sealing element into the gland.
7. Install a gasket (360Q) and gland (107) on the stuffing-box cover (184).
8. Install the nuts (355).
9. Install a dynamic-seal assembly and nuts (370H).

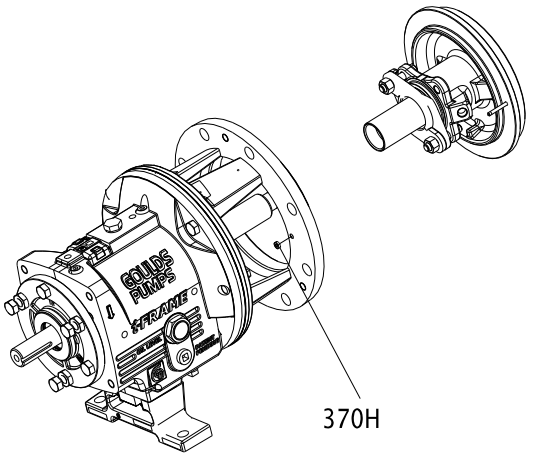

Figure 115: Dynamic seal installation

10. Check the stuffing-box-cover runout and rotate the indicator through 360 degrees.

An indicator reading that is greater than 0.013 mm | 0.005 in. indicates a problem.

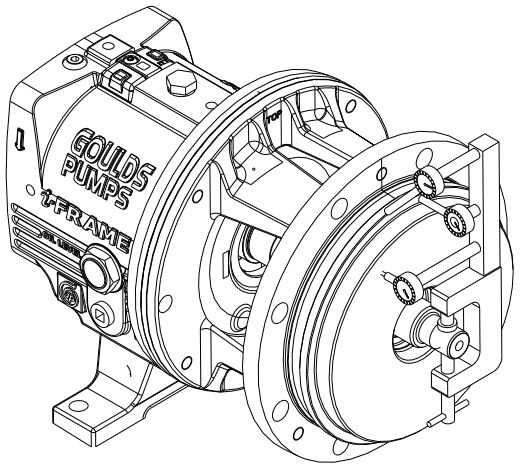

Figure 116: Checking for stuffing-box-cover runout

Seal the shaft with a packed stuffing box

WARNING:
Ex Packed stuffing boxes are not allowed in an ATEX-classified environment.

Pumps are shipped without the packing, lantern ring, or split gland installed. These parts are included with the box of fittings shipped with each pump and must be installed before startup.

1. Carefully clean the stuffing-box bore.
2. Twist the packing enough to get it around the shaft.

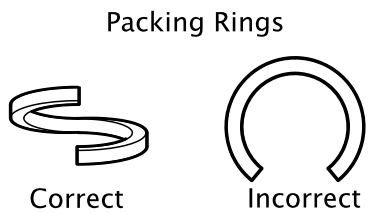

Figure 117: Packing rings

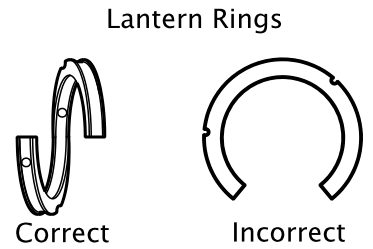

Figure 118: Lantern rings

Figure 119: Stuffing box water connections

3. Insert the packing and stagger the joints in each ring by 90°.
   Install the stuffing-box parts in this order:
   a) Two packing rings
   b) One lantern ring (two-piece)
   c) Three packing rings

NOTICE:
Make sure that the lantern ring is located at the flushing connection to ensure that flush is obtained. Failure to do so may result in decreased performance.

4. Install the gland halves and evenly hand-tighten the nuts.

Seal the shaft with a cartridge mechanical seal

WARNING:
Ⓔx The mechanical seal used in an Ex-classified environment must be properly certified. Prior to startup, make sure that all areas that could leak pumped fluid to the work environment are closed.

NOTICE:
Ⓔx The mechanical seal must have an appropriate seal-flush system. Failure to do so will result in excess heat generation and seal failure.

1. Slide the cartridge seal onto the shaft or sleeve until it contacts the inboard labyrinth oil seal.
2. Assemble the seal chamber.
3. Slide the cartridge seal into the seal chamber and secure using the four studs and nuts.
4. Continue with the pump reassembly.
5. Set the impeller clearance.
   Refer to the Impeller clearance setting topic for more information.
6. Tighten the setscrews in the seal locking ring in order to secure the seal to the shaft.
7. Remove the centering clips from the seal.

Seal the shaft with a conventional inside-component mechanical seal

WARNING:
Ⓔx The mechanical seal used in an Ex-classified environment must be properly certified. Prior to startup, make sure that all areas that could leak pumped fluid to the work environment are closed.

NOTICE:
Ⓔx The mechanical seal must have an appropriate seal-flush system. Failure to do so will result in excess heat generation and seal failure.

1. Assemble the seal chamber:

a) Install a seal-chamber cover or a backplate (184) and fasten with nuts (370H) with .

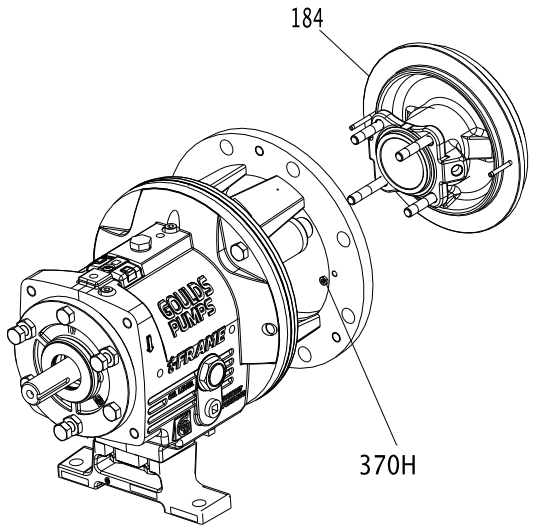

Figure 120: Assemble seal-chamber

b) Check the seal-chamber cover runout.

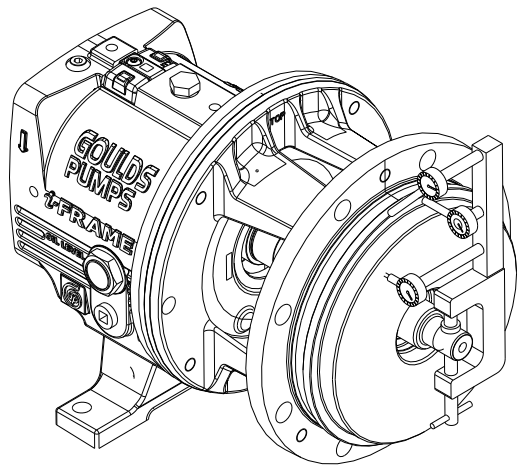

Figure 121: Check seal-chamber cover runout

Rotate the indicator through 360º. If the total indicator reading is greater than 0.13 mm | 0.005 inches, determine the cause and correct the issue before you proceed.

c) Install the shaft sleeve (126).

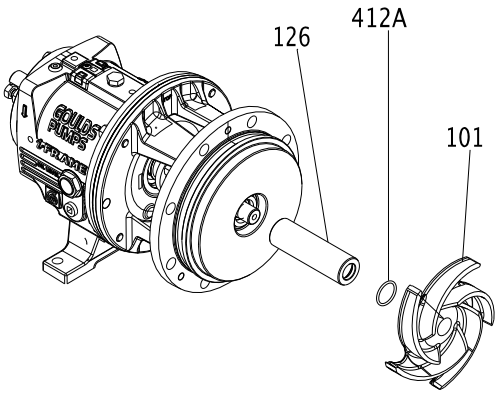

Figure 122: Install shaft sleeve

2. Mark the shaft and sleeve at the face of the seal chamber.
3. Continue the complete reassembly of the pump, except for the mechanical seal.
4. Set the impeller clearance.
   Refer to the Impeller Clearance Setting section for more information.
5. Scribe a line on the marked shaft and sleeve at the face of the seal chamber.
6. Remove the casing, the impeller, and the seal chamber.
7. If applicable, slide the gland, with the stationary seat and gland gasket installed, onto the shaft until it contacts the inboard labyrinth oil seal.
8. Install the mechanical-seal rotary unit according to the manufacturer's instructions.
   Use the scribed line and the seal-reference dimension.
9. Reinstall the seal chamber.
10. Slide the gland on the seal-chamber studs and secure them with the gland nuts.
    Tighten the nuts evenly so that the gland is seated on the seal-chamber pilot and is perpendicular to the shaft.
11. Complete the reassembly of the pump.

Seal the shaft with a conventional outside-component mechanical seal

WARNING:
⟨Ex⟩ The mechanical seal used in an Ex-classified environment must be properly certified. Prior to startup, make sure that all areas that could leak pumped fluid to the work environment are closed.

NOTICE:
⟨Ex⟩ The mechanical seal must have an appropriate seal-flush system. Failure to do so will result in excess heat generation and seal failure.

1. Assemble the seal chamber.

a) Install the seal-chamber cover or backplate (184) and fasten with nuts (370H).

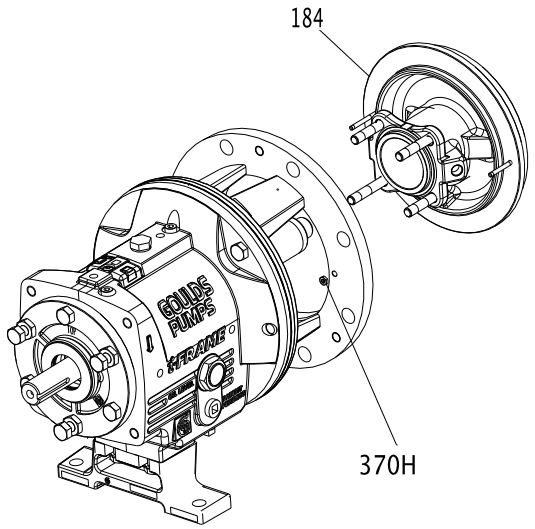

Figure 123: Seal-chamber cover or backplate installation

b) Check the seal-chamber cover runout.

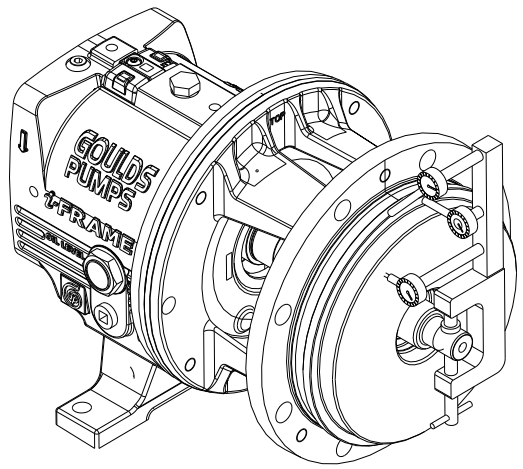

Figure 124: Check seal-chamber cover runout

Rotate the indicator through 360 degrees. If the total indicator reading is greater than 0.13 mm | 0.005 in., determine the cause and correct the issue before you proceed.

c) Install the shaft sleeve (126).

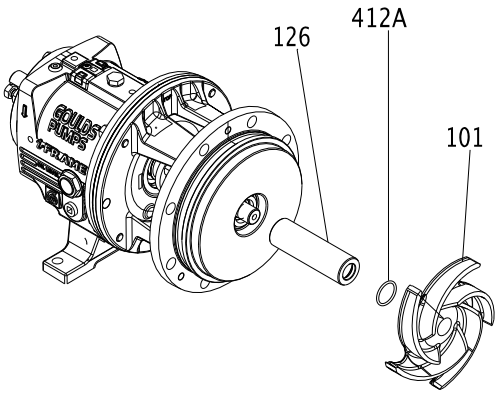

Figure 125: Install shaft sleeve

2. Mark the shaft and sleeve at the face of the seal chamber.
3. Continue the complete reassembly of the pump, except for the mechanical seal.
4. Set the impeller clearance.
   Refer to the Impeller clearance setting section for more information.
5. Scribe a line on the marked shaft and sleeve at the face of the seal chamber.
6. Remove the casing, the impeller, and the seal chamber.
7. Install the mechanical-seal rotary unit per the manufacturer's instructions.
   Use the scribed line as the seal-reference dimension. Be sure to secure the rotary unit in place using the set screws in the locking ring.
8. Install the gland, with the stationary seat and gland gaskets installed, on the seal chamber.
9. Reinstall the seal chamber.
10. Complete the reassembly of the pump.

Install the impeller

CAUTION:
Wear heavy work gloves when you handle impellers. The sharp edges can cause physical injury.

1. Install the impeller.

Pump size	Action
STi, MTi, and LTi	Install the impeller (101). Use a new impeller O-ring (412A).
XLT-i and i17	Install the impeller (101) and a Teflon washer (428D) on the plug (458Y). Use a new impeller O-ring (412A).

2. Attach a shaft wrench and a coupling key on the shaft.
   a) When the impeller (101) makes firm contact with the sleeve (126), raise the shaft wrench (counterclockwise, viewed from the impeller end of the shaft) off of the bench and slam it down (clockwise, viewed from the impeller end of shaft).

b) Apply a few sharp raps to tighten the impeller (101).

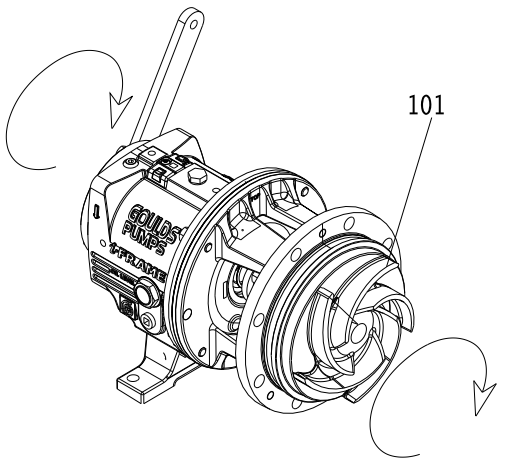

Figure 126: Tighten the impeller

3. Loosen the clamp bolts (370C) and the jack bolts (370D).
4. Measure the gap between the impeller (101) and the seal chamber and stuffing-box cover (184) with a feeler gauge.

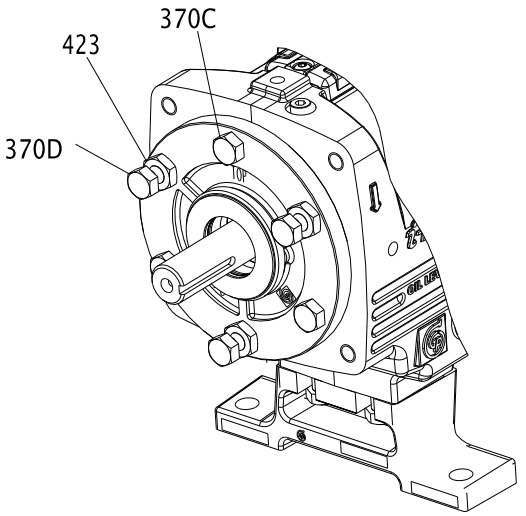

Figure 127: Loosen clamp bolts

5. When you reach a 0.030 in. (0.76 mm) clearance, tighten the clamp bolts (370C), jack bolts (370D), and lock nuts (423).
   This approximates the impeller position when it is set to 0.38 mm | 0.015 in. from the casing. Perform a final impeller adjustment after you install the impeller into the casing.
6. Check the impeller (101) runout.

Check vane tip to vane tip. If the total indicator reading is greater than 0.13 mm | 0.005 in., determine the cause and correct the issue before you proceed.

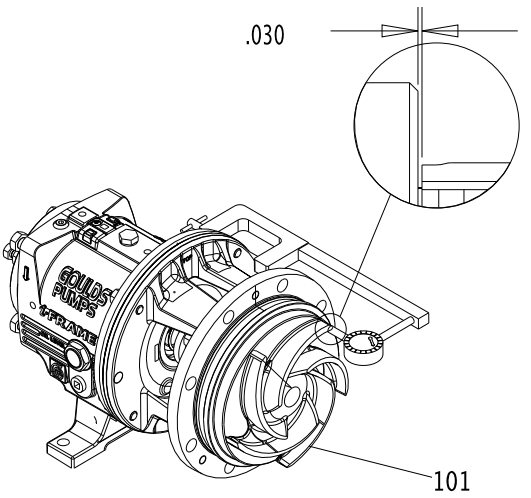

Figure 128: Check impeller run out

For more information on how to set the impeller clearances, refer to the Impeller-clearance checks and Impeller-clearance setting sections in Commissioning, Startup, Operation, and Shutdown.

Attach the i-*ALERT*® Condition Monitor to the pump

CAUTION:
Always wear protective gloves. The pump and condition monitor can be hot.

Tools required:

- 5/32 inch hex wrench

1. Attach the condition monitor (761B) to the bearing frame (228A) using the hex-head screw (372T) provided.

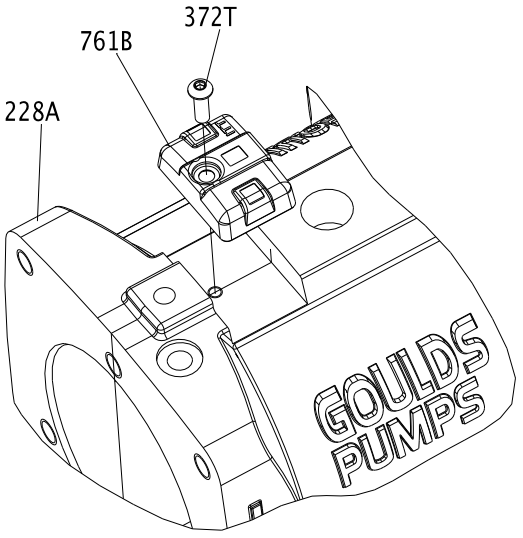

Figure 129: Attach condition monitor to bearing frame

2. Tighten the hex-head screw with a 5/32 inch hex wrench to 8 Nm | 6 ft-lbs.

Post-assembly checks

Perform these checks after you assemble the pump, then continue with pump startup:

- Rotate the shaft by hand in order to make sure that it rotates easily and smoothly and that there is no rubbing.
- Open the isolation valves and check the pump for leaks.

Install the back pull-out assembly (except HT 3196)

CAUTION:
Never remove the back pull-out assembly without assistance.

1. Clean the casing fit and install the casing gasket (351) on the seal chamber and stuffing-box cover.
2. Loosen the clamping bolts (370C) and jack bolts (370D) on the bearing housing.

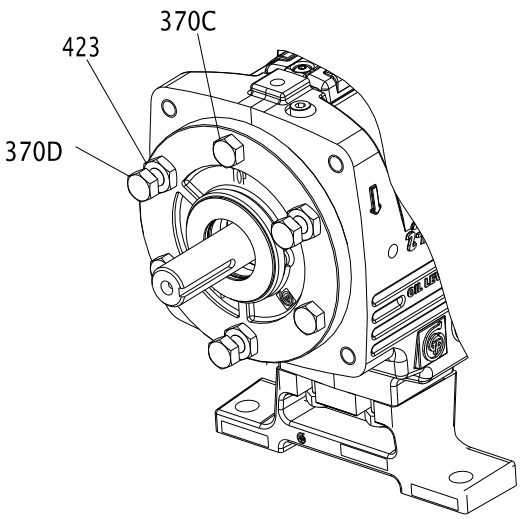

Figure 130: Loosen clamp bolts and jack bolts on bearing housing

3. Install the back pull-out assembly in the casing.

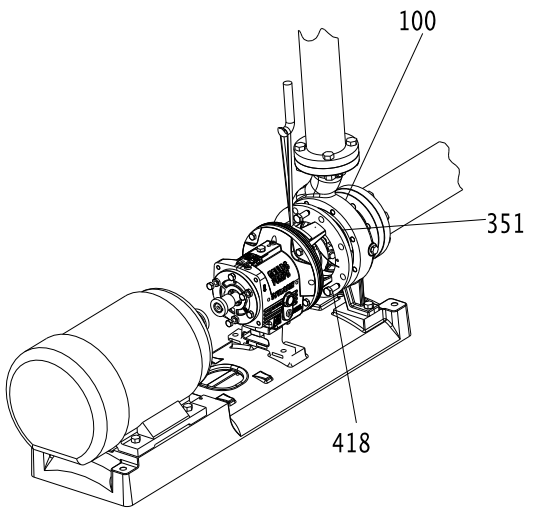

Figure 131: Install back pull-out assembly

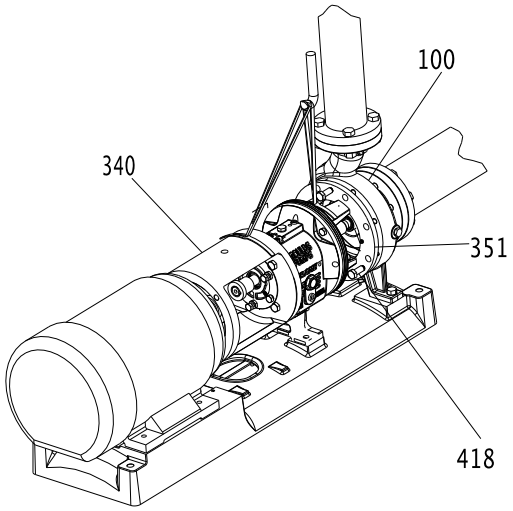

Figure 132: Install back pull-out assembly

4. Install and then hand-tighten the casing bolts (370).
   Refer to the bolt torque values for information on how to tighten the casing bolts.
5. Install and tighten the casing jackscrews (418).

NOTICE:
Do not overtighten the casing jackscrews. Doing so may result in equipment damage.

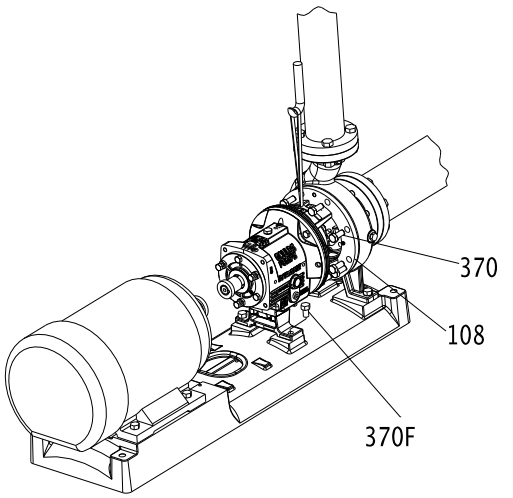

Figure 133: Install and tighten casing jackscrews

6. Reinstall the shims under the frame foot and tighten the frame foot to the baseplate.
   Make sure that you use the proper shim. Mount a dial indicator in order to measure the distance between the top of the frame and the baseplate. Make sure that the distance does not change as you tighten the frame-foot bolts.
7. Check the total clearance of the impeller in the casing.
   With new parts, an acceptable range is 0.76 mm | 0.030 in. to 1.65 mm | 0.065 in. If the impeller clearance is outside of this range, you either have the incorrect parts, an improper installation, or too much pipe strain. Determine the cause and correct the problem before you proceed.
8. Adjust the impeller clearance.
   Refer to the Impeller clearance setting section for more information.
9. Replace the auxiliary piping.

10. Fill the pump with the proper lubricant. See Lubricating-oil requirements.
11. Reinstall the coupling guard.
    See Install the coupling guard for more information.

NOTICE:
Risk of damage to the mechanical seal or shaft sleeve on units supplied with cartridge mechanical seals. Prior to startup, make sure to tighten the set screws in the seal locking ring and remove the centering clips.

Assembly references

Bolt torque values

Table 18: Bolt torque, Nm | lb-ft
This table provides the bolt torque values.

Location	Frame	3196, CV 3196, LF 3196, 3796		NM 3196		3198	
		Lube	Dry	Lube	Dry	Lube	Dry
Casing bolts (370) or casing nuts (425)	6-in. STi	Refer to the maximum torque values in Nm | lb-ft for casing bolts table.		36 | 27	53 | 40	N/A	N/A
	8-in. STi			27 | 20	40 | 30	47 | 35	71 | 53
	MTi, LTi			36 | 27	53 | 40	47 | 35	71 | 53
	XLT-i, i17			N/A	N/A	N/A	N/A
Frame-to-adapter bolts	All	27 | 20	40 | 30	27 | 20	40 | 30	27 | 20	40 | 30
Bearing-clamp ring bolts (236A) - duplex bearing only	STi, MTi	1.1* | 10	1.9* | 17	1.1* | 10	1.9* | 17	1.1* | 10	1.9* | 17
	LTi	6.2* | 55	9.4* | 83	6.2* | 55	9.4* | 83	6.2* | 55	9.4* | 83
Bearing end cover bolts (371C)	XLT-i, i17	12 | 9	16 | 12	N/A	N/A	N/A	N/A
Dynamic seal cap-screws (265)	STi, MTi, LTi	6.2* | 55	9.4 * | 83	N/A	N/A	N/A	N/A
	XLT-i, i17	12 | 9	16 | 12	N/A	N/A	N/A	N/A
* Values are in Nm | lb-in.							

Table 19: Maximum torque values in Nm | lb-ft for casing bolts
This table provides the maximum torque values for casing bolts.

		Models 3196, CV 3196 LF 3196, 3796 with 68 kg | 150 lb casing flanges				Model HT 3196 and all models with 136 kg | 300 lb casing flanges	
		Material specification					
		Ductile iron casing with A307 Grade B casing bolts		Alloy casing with (304SS) F593 Grade 1 or (316SS F593) Grade 2 casing bolts		Ductile iron and alloy casings with A193 grade B7 casing bolts	
Frame	Casing bolt diameter (in.)	Lube	Dry	Lube	Dry	Lube	Dry
8 in. STi	0.50	27 | 20	41 | 30	47 | 35	73 | 54	79 | 58	118 | 87
6 in. STi	0.625	53 | 39	80 | 59	96 | 71	145 | 107	156 | 115	235 | 173
MTi	0.625	53 | 39	80 | 59	96 | 71	145 | 107	156 | 115	235 | 173
LTi	0.625	53 | 39	80 | 59	96 | 71	145 | 107	156 | 115	235 | 173
XLT-i	0.625	53 | 39	80 | 59	96 | 71	145 | 107	156 | 115	235 | 173
i17	7/8	153 | 113	230 | 170	191 | 141	287 | 212	447 | 330	671 | 495

Shaft-end play

Table 20: Shaft-end play
Use this table as a reference for shaft-end play values.

Frame	Double row bearing	Duplex bearing
STi millimeters | inches	0.028 | 0.0011 0.048 | 0.0019	0.018 | 0.0007 0.025 | 0.0010

Frame	Double row bearing	Duplex bearing
MTi millimeters | inches	0.033 | 0.0013 0.053 | 0.0021	0.023 | 0.0009 0.030 | 0.0012
LTi millimeters | inches	Not applicable	0.025 | 0.0010 0.038 | 0.0015
XLT-i millimeters | inches	0.036 | 0.0014 0.058 | 0.0023	0.025 | 0.0010 0.038 | 0.0015

Bearing types

Table 21: Bearing types

Frame	Inboard bearing	Outboard bearing	
		Double row	Duplex
STi	6207	3306	7306
MTi	6309	3309	7309
LTi	6311	Not applicable	7310
XLT-i, i17	6313	3313	7313

Spare parts

Always state the serial number and indicate the part name and item number from the relevant sectional drawing when you order spare parts. It is imperative for service reliability to have a sufficient stock of readily available spare parts.

- Impeller (101)
- Shaft (122A)
- Shaft sleeve (126)
- Outboard bearing (112A)
- Inboard bearing (168A)
- Casing gasket (351)
- Frame-to-adapter gasket (360D)
- Bearing-housing retaining ring (361A)
- Bearing lockwasher (382)
- Bearing locknut (136)
- Impeller O-ring (412A)
- Bearing-housing O-ring (496)
- Outboard labyrinth-seal rotary O-ring (497F)
- Outboard labyrinth-seal stationary O-ring (497G)
- Inboard labyrinth-seal rotary O-ring (497H)
- Inboard labyrinth-seal stationary O-ring (497J)
- Lantern ring half (105) (packed stuffing box)
- Stuffing box packing (106) (packed stuffing box)
- Packing gland (107) (packed stuffing box)
- Impeller gasket (428D) (XLT-i and i17 only)

Interchangeability drawings

3196 interchangeability

Table 22: 3196 interchangeability drawing

Description	Shaft and Bearing Frame Assembly	Adapter	Seal Chamber	Impeller	Casing	Size
Model 3196 STi 1–3/8 in. Shaft Dia. Max BHP-40 HP	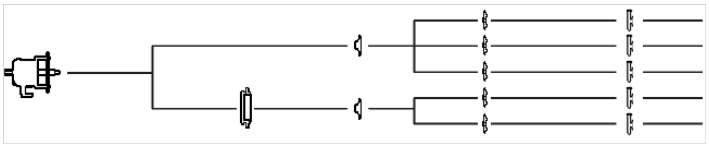					1x1.5-6 A 1.5x3-6 A 2x3-6 AC 1X1.5-8 A 1.5X3-8 A
Model 3196 MTi 1–3/4 in. Shaft Dia. Max BHP-122 HP	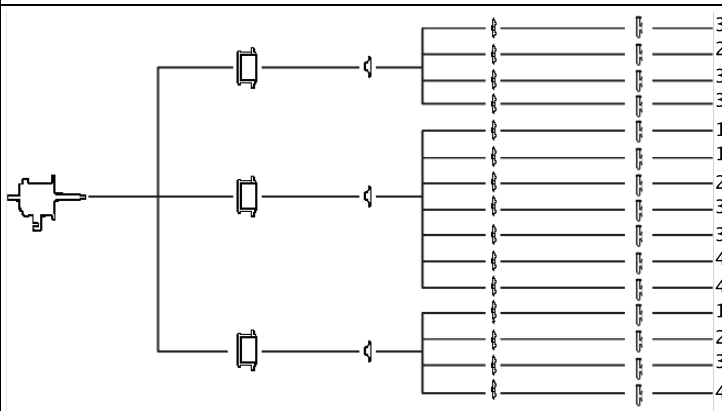					3X4-7 A70 2X3-8 A60 3X4-8 A70 3X4-8G A70 1X2-10 A05 1.5X3-10 A5 2X3-10 A60 3X4-10 A70 3X4-10H A4 4X6-10 A80 4X6-10H A8 1.5X3-13 A2 2X3-13 A30 3X4-13 A40 4X6-13 A80
Model 3196 LTi 2–1/8 in. Shaft Dia. Max BHP-200 HP	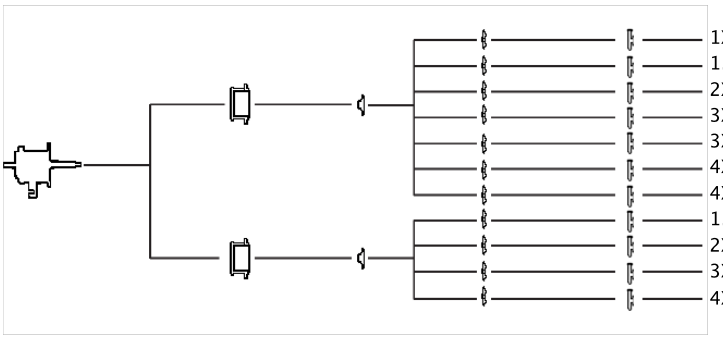					1X2-10 A05 1.5X3-10 A5 2X3-10 A60 3X4-10 A70 3X4-10H A4 4X6-10G A8 4X6-10H A8 1.5X3-13 A2 2X3-13 A30 3X4-13 A40 4X6-13 A80
Model 3196 XLT-i 2–1/2 in. Shaft Dia. Max BHP-250 HP 17 in. XLT-i has 2–3/4 in. Shaft Dia. Max BHP-350 HP	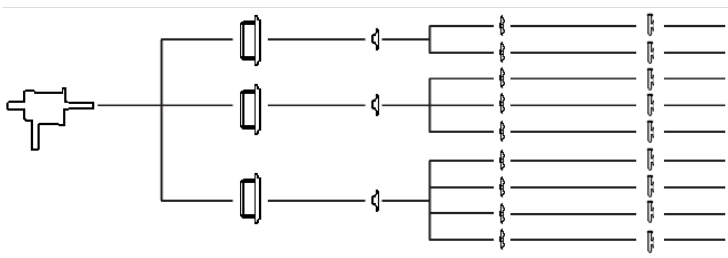					6X8-13 A90 8X10-13 A100 6X8-15 A110 8X10-15 A120 8X10-15G A12 8X10-15H A12 4X6-17 A105 6X8-17 A110 8X10-17 A120

Lubrication conversion

Frame lubrication conversion

NOTICE:

- Never mix greases of different consistencies (NLGI 1 or 3 with NLGI 2) or with different thickeners. For example, never mix a lithium-based grease with a polyurea-based grease. Doing so may result in decreased performance.
- Remove the bearings and old grease if you need to change the grease type or consistency. Failure to do so may result in equipment damage or decreased performance.

Use a grease that is suitable for high temperatures when you have frame pumpage temperatures greater than 177°C | 350°F. Ensure that mineral-oil greases have oxidation stabilizers and a consistency of NLGI 3.

Table 23: Lubricating-grease requirements

Most pumps use Sunoco 2EP grease. High temperature units with a pumpage temperature greater than 177°C | 350° F use Mobil SCH32.
This table shows which brand of grease to use when lubricating the pump.

	Pumpage temperature less than 177°C | 350°F	Pumpage temperature greater than 177°C | 350°F
NGLI consistency	2	3
Mobil	Mobilux EP2	SCH32
Exxon	Unirex N2	Unirex N3
Sunoco	Mutipurpose 2EP	N/A
SKF	LGMT 2	LGMT 3

Convert from greased-for-life or regreaseable to oil-lubricated bearings

1. Remove the plug from the oil-return slot in the frame located under the radial bearing. Use this table as a guide.

Pump model	Action
STi	Remove the epoxy from the return slot.
MTi, LTi, XLT-i, and i-17	Remove the set screw installed in the oil-return hole.

2. Remove the plug from the oil-return hole in the bearing housing (134).
3. Replace both bearings with unshielded, oil-lubricated bearings.

Table 24: Bearing types

Frame	Inboard bearing	Outboard bearing	
		Double row	Duplex
STi	6207	3306	7306
MTi	6309	3309	7309
LTi	6311	Not applicable	7310
XLT-i, i17	6313	3313	7313

4. Remove the grease fittings (193) to prevent accidental greasing.
   Two plugs (408H) are required to replace the two grease fittings.

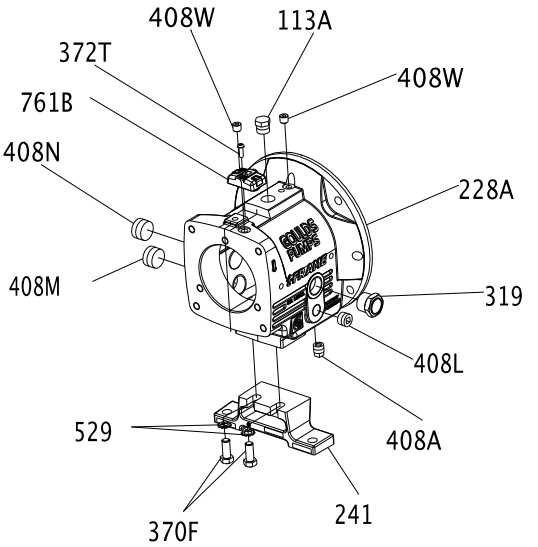

Figure 134: Replace two grease fittings with two plugs

Item Number	Size	Description	Quantity
113	1/4"-18 NPT	External hex/square head pipe plug	2
113A	1/2"-14 NPT	External hex/square head pipe plug	1
193	1/4"-18 NPT	Grease fitting	2
228	- - - -	Bearing frame	1
241	- - - -	Frame foot	1
370F	1/2"	Hex cap screw	2
408A	3/8"-18 NPT	External square head pipe plug (magnetic)	1
408J	1/4"-18 NPT	External hex/square head pipe plug	1
408L	1/2"-14 NPT	Square countersunk headless pipe plug	1
408M	1" 11-1/2" NPT	Square countersunk headless pipe plug	1
529	1/2"	Light helical spring lock washer	2

Conversion from flood-oil to pure-oil mist

Consult your local ITT representative for further information on this topic.

Convert from flood oil to regreaseable

Consult your local ITT representative for further information on this topic.

Troubleshooting

Operation troubleshooting

Symptom	Cause	Remedy
The pump is not delivering liquid.	The pump is not primed.	Re-prime the pump and check that the pump and suction line are full of liquid.
	The suction line is clogged.	Remove the obstructions.
	The impeller is clogged.	Back-flush the pump in order to clean the impeller.
	The shaft is rotating in the wrong direction.	Change the rotation. The rotation must match the arrow on the bearing housing or pump casing.
	The foot valve or suction pipe opening is not submerged enough.	Consult an ITT representative for the proper submersion depth. Use a baffle in order to eliminate vortices.
	The suction lift is too high.	Shorten the suction pipe.
The pump is not producing the rated flow or head.	The gasket or O-ring has an air leak.	Replace the gasket or O-ring.
	The stuffing box has an air leak.	Replace or readjust the mechanical seal.
	The impeller is partly clogged.	Back-flush the pump in order to clean the impeller.
	The clearance between the impeller and the pump casing is excessive.	Adjust the impeller clearance.
	The suction head is not sufficient.	Make sure that the suction-line shutoff valve is fully open and that the line is unobstructed.
	The impeller is worn or broken.	Inspect and replace the impeller if necessary.
The pump starts and then stops pumping.	The pump is not primed.	Re-prime the pump and check that the pump and suction line are full of liquid.
	The suction line has air or vapor pockets.	Rearrange the piping in order to eliminate air pockets.
	The suction line has an air leak.	Repair the leak.
The bearings are running hot.	The pump and driver are not aligned properly.	Realign the pump and driver.
	There is not sufficient lubrication.	Check the lubricant for suitability and level.
	The lubrication was not cooled properly.	Check the cooling system.
The pump is noisy or vibrates.	The pump and driver are not aligned properly.	Realign the pump and driver.
	The impeller is partly clogged.	Back-flush the pump in order to clean the impeller.
	The impeller or shaft is broken or bent.	Replace the impeller or shaft as necessary.
	The foundation is not rigid.	Tighten the hold-down bolts of the pump and motor. Make sure the baseplate is properly grouted without voids or air pockets.
	The bearings are worn.	Replace the bearings.
	The suction or discharge piping is not anchored or properly supported.	Anchor the suction or discharge piping as necessary according to recommendations in the Hydraulic Institute Standards Manual.
	The pump is cavitating.	Locate and correct the system problem.
The mechanical seal is leaking excessively.	The packing gland is not adjusted properly.	Tighten the gland nuts.
	The stuffing box is not packed properly.	Check the packing and repack the box.
	The mechanical seal parts are worn.	Replace the worn parts.
	The mechanical seal is overheating.	Check the lubrication and cooling lines.
	The shaft sleeve is scored.	Machine or replace the shaft sleeve as necessary.
The motor requires excessive power.	The discharge head has dropped below the rated point and is pumping too much liquid.	Install a throttle valve. If this does not help, then trim the impeller diameter. If this does not help, then contact your ITT representative.
	The liquid is heavier than expected.	Check the specific gravity and viscosity.
	The stuffing-box packing is too tight.	Readjust the packing. If the packing is worn, then replace the packing.
	Rotating parts are rubbing against each other.	Check the parts that are wearing for proper clearances.
	The impeller clearance is too tight.	Adjust the impeller clearance.

Alignment troubleshooting

Symptom	Cause	Remedy
Horizontal (side-to-side) alignment cannot be obtained (angular or parallel).	The driver feet are bolt-bound.	Loosen the pump's hold-down bolts, and slide the pump and driver until you achieve horizontal alignment.
	The baseplate is not leveled properly and is probably twisted.	1. Determine which corners of the baseplate are high or low. 2. Remove or add shims at the appropriate corners. 3. Realign the pump and driver.

Assembly troubleshooting

Symptom	Cause	Remedy
There is excessive shaft end play.	The internal clearance of the bearings exceeds the recommended amount.	Replace the bearings with a bearing of the correct type.
	The snap ring is loose in the bearing-housing groove.	Re-seat the snap ring.
There is excessive shaft and sleeve runout.	The sleeve is worn.	Replace the sleeve.
	The shaft is bent.	Replace the shaft.
There is excessive bearing-frame flange runout.	The shaft is bent.	Replace the shaft.
	The flange of the bearing frame is distorted.	Replace the bearing-frame flange.
There is excessive frame-adapter runout.	There is corrosion on the frame adapter.	Replace the frame adapter.
	The adapter-to-frame gasket is not seated properly.	Re-seat the frame adapter and make sure that the adapter-to-frame gasket is seated properly.
There is excessive seal chamber or stuffing-box cover runout.	The seal chamber or the stuffing-box cover is not properly seated in the frame adapter.	Re-seat the seal chamber or stuffing-box cover.
	There is corrosion or wear on the seal chamber or stuffing-box cover.	Replace the seal chamber or stuffing-box cover.
There is excessive vane-tip runout of the impeller.	The vane is bent.	Replace the impeller.

i-*ALERT*® Condition Monitor troubleshooting

To troubleshoot t the i-*ALERT*®*2* monitor, please refer to the i-*ALERT*®*2* IOM or i-ALERT2.com.

Symptom	Cause	Remedy
There are no green or red flashing LEDs.	The battery is dead.	Replace the condition monitor.
	The unit is deactivated.	Activate the condition monitor.
	The unit is malfunctioning.	Consult your ITT representative for a warranty replacement.
The red LEDs are flashing, but the temperature and vibration are at acceptable levels.	The baseline is bad.	Check the temperature and vibration levels and reset the condition monitor.
	The unit is malfunctioning.	Consult your ITT representative for a warranty replacement.

Parts Listings and Cross-Sectionals

Parts list

Table 25: Construction material and quantity

Item	Quantity	Part name	Pump Material				
			All D.I.	D.I. With 316 SS impeller	All 316SS	All CD4MCu	All Alloy 20
100	1	Casing	1012	1012	1203	1216	1204
101	1	Impeller	1013	1203	1203	1216	1204
105	1	Lantern Ring	Teflon				
106	1 set	Stuffing Box Packing	Non-asbestos braid				
107	1	Gland—Packed Box	1203			1204	
108	1	Frame Adapter	1013				
109C	1***	Outboard Bearing End Cover	1001				
112A	1	Outboard Bearing	Double row angular contact (duplex pair for LTi)				
113	2	Plug—Grease Relief	2210				
113B	1	Plug—Oil Fill	2210				
122	1	Shaft—Without Sleeve	2229			2230	
122	1	Shaft—With Sleeve	2238				
126	1	Shaft Sleeve	2229				2230
134	1	Bearing Housing	1001				
136	1	Bearing Locknut	Steel				
168A	1	Radial Bearing	Single row ball				
184	1	Seal Chamber/Stuffing Box Cover	1012	1012	1203	1216	1204
193	2	Grease Fitting	Steel				
228	1	Bearing Frame	STi 1013, All others - 1001				
236A	10	Cap Screw—Bearing Clamp Ring	2210				
239	1	Support, Casing	–	–	2201*	2201*	2201*
241	1	Frame Foot	1001				
248	1	Oil Thrower	2210				
250	1	Gland—Mechanical Seal	Material varies				
253B	1	Bearing Clamp Ring	2210				
319	1	Sight Glass	Glass/steel				
332A	1	Outboard Labyrinth Seal w/O-rings	Brass ASTM B505-96				
333A	1	Inboard Labyrinth Seal w/O-rings	Brass ASTM B505-96				
351	1	Casing Gasket	Aramid fiber w/EPDM				
353	4	Gland Stud	2228				
355	4	Gland Stud Nut	2228				
358	1	Plug—Casing Drain	2210		2229	2230	
358Y	1 ***	Plug, Impeller	2229			2230	
360C	1 ***	Gasket—Thrust End Cover	Buna				
360D	1	Gasket—Frame-to-Adapter	Buna				
360Q	1	Gasket—Gland-to-Stuffing Box Cover	Material varies				
361A	1	Retaining Ring	Steel				
370	****	Bolt—Adapter to Case	2210		2228		
370B	4	Bolt—Frame-to-Adapter	2210				
370C	**	Clamp Bolt —Bearing Housing	2210				
370D	**	Jack Bolt—Bearing Housing	2210				
370F	2	Bolt—Frame Foot to Frame	2210				
370H	2	Stud—Stuffing Box Cover-to-Adapter	2228				
370Y	2	Bolt—Cap Casing to Support	–	–	2210*		
371C	6 ***	Cap Screw-End Cover to Bearing Housing	2210				
382	1	Bearing Lockwasher	Steel				
383	1	Mechanical Seal	Material varies				
400	1	Coupling Key	2210				

Item	Quantity	Part name	Pump Material				
			All D.I.	D.I. With 316 SS impeller	All 316SS	All CD4MCu	All Alloy 20
408A	1	Plug—Oil Drane	2210				
408H	4	Plug—Oil Mist Connection	2210				
408J	1	Plug—Oiler	2210				
408L	1	Plug—Oil Cooler Inlet	2210				
408M	1	Plug—Oil Cooler Outlet	2210				
408N	1	Plug—Sight Glass	2210				
412A	1	O-Ring, Graphoil Impeller	–	–	*		
418	3	Jack Bolt—Adapter-to-Case	2228				
423	3	Jam Nut—Bearing Housing Jack Bolt	2210				
423B	2	Hex Nut—Stuffing Box Cover to Adapter	2228				
428	1	Gasket, Plug	Teflon				
437	1	Lockwasher, Casing to Support	–	–	2210*		
458Y	1 ***	Plug, Impeller	2229			2230	
469B	2	Dowel Pin—Frame-to-Adapter	Steel				
494	1	Tube Element, Finned Cooled	304SS / Copper				
496	1	O-Ring Bearing Housing	Buna N				
412A	1	O-Ring—Impeller	Viton				
497F	1	O-Ring—Outboard Labyrinth Rotor	Viton				
497G	1	O-Ring—Outboard Labyrinth Stator	Viton				
497H	1	O-Ring—Inboard Labyrinth Rotor	Viton				
497J	1	O-Ring—Inboard Labyrinth Stator	Viton				
497L	1	O-Ring Internal (inboard)	Viton				
497N	1	O-Ring Internal (outboard)	Viton				
503	1	Adapter Ring	1013				
529	1	Lockwasher—Frame Foot-to-Bearing Frame	Steel				
555	1	Tube, Finned Cooling Assembly	304AA / Copper				
555A	1	Tube, Ftg Male (Frame Cooling)	Brass				
555B	2	Connector, Thermocouple (Frame Cooling)	Brass				
555C	2	Elbow, Female (Frame Cooling)	Brass				
555D	1	Conn TC Sealed PWR	Cast iron				
761B	1	i-*ALERT*® Condition Monitor	Stainless steel/epoxy				

Table 26: Construction material and quantity (continued)

Item	Quantity	Part name	Pump Material				
			All 317SS	All Monel	All Nickel	All Hastelloy C	All Hastelloy B
100	1	Casing	1209	1119	1601	1215	1217
101	1	Impeller	1209	1119	1601	1215	1217
105	1	Lantern Ring	Teflon				
106	1 set	Stuffing Box Packing	Non-asbestos braid				
107	1	Gland—Packed Box	1209	1119	1601	1215	1217
108	1	Frame Adapter	1013				
109C	1***	Outboard Bearing End Cover	1001				
112A	1	Outboard Bearing	Double row angular contact (duplex pair for LTi)				
113	2	Plug—Grease Relief	2210				
113B	1	Plug—Oil Fill	2210				
122	1	Shaft—Less Sleeve	2232	2150	2155	2248	2247
122	1	Shaft—With Sleeve	2229				
126	1	Shaft Sleeve	2232	2150	2155	2248	2247
134	1	Bearing Housing	1001				
136	1	Bearing Locknut	Steel				
168A	1	Radial Bearing	Single row ball				
184	1	Seal Chamber/Stuffing Box Cover	1209	1119	1601	1215	1217
193	2	Grease Fitting	Steel				

Item	Quantity	Part name	Pump Material				
			All 317SS	All Monel	All Nickel	All Hastelloy C	All Hastelloy B
228	1	Bearing Frame	STi-1013, All others - 1001				
236A	10	Cap Screw—Bearing Clamp Ring	2210				
239	1	Support, Casing	–	–	–	2201*	–
241	1	Frame Foot	1001				
248	1	Oil Thrower	2210				
250	1	Gland—Mechanical Seal	Material varies				
253B	1	Bearing Clamp Ring	2210				
319	1	Sight Glass	Glass/steel				
332A	1	Outboard Labyrinth Seal w/O-rings	Brass ASTM B505-96				
333A	1	Inboard Labyrinth Seal w/O-rings	Brass ASTM B505-96				
351	1	Casing Gasket	Aramid fiber w/EPDM				
353	4	Gland Stud	2232	2150	2155	2248	2247
355	4	Gland Stud Nut	2232	2150	2155	2248	2247
358	1	Plug—Casing Drain	2232	2150	2156	2248	2247
358Y	1 ***	Plug, Impeller	2232	2150	2156	2248	2156
360C	1 ***	Gasket—Thrust End Cover	Buna				
360D	1	Gasket—Frame-to-Adapter	Buna				
360Q	1	Gasket—Gland-to-Stuffing Box Cover	Material varies				
361A	1	Retaining Ring	Steel				
370	****	Bolt—Adapter to Case	2228				
370B	4	Bolt—Frame-to-Adapter	2210				
370C	**	Clamp Bolt —Bearing Housing	2210				
370D	**	Jack Bolt—Bearing Housing	2210				
370F	2	Bolt—Frame Foot to Frame	2210				
370H	2	Stud—Stuffing Box Cover-to-Adapter	2228				
370H	2	Bolt—Cap Casing to Support	–	–	–	2210*	–
371C	6 ***	Cap Screw-End Cover to Bearing Housing	2210				
382	1	Bearing Lockwasher	Steel				
383	1	Mechanical Seal	Material varies				
400	1	Coupling Key	2210				
408A	1	Plug—Oil Drane	2210				
408H	4	Plug—Oil Mist Connection	2210				
408J	1	Plug—Oiler	2210				
408L	1	Plug—Oil Cooler Inlet	2210				
408M	1	Plug—Oil Cooler Outlet	2210				
408N	1	Plug—Sight Glass	2210				
412A	1	O-Ring, Graphoil Impeller	–	–	–	*	–
418	3	Jack Bolt—Adapter-to-Case	2228				
423	3	Jam Nut—Bearing Housing Jack Bolt	2210				
423B	2	Hex Nut—Stuffing Box Cover to Adapter	2228				
428	1	Gasket, Plug	Teflon				
437	1	Lockwasher, Casing to Support	–	–	–	2210*	–
458Y	1***	Plug, Impeller	2232	2150	2155	2248	2247
469B	2	Dowel Pin—Frame-to-Adapter	Steel				
494	1	Tube Element, Finned Cooled	304SS / Copper				
496	1	O-Ring Bearing Housing	Buna N				
412A	1	O-Ring—Impeller	Viton				
497F	1	O-Ring—Outboard Labyrinth Rotor	Viton				
497G	1	O-Ring—Outboard Labyrinth Stator	Viton				
497H	1	O-Ring—Inboard Labyrinth Rotor	Viton				
497J	1	O-Ring—Inboard Labyrinth Stator	Viton				
497L	1	O-Ring Internal (inboard)	Viton				
497N	1	O-Ring Internal (outboard)	Viton				
503	1	Adapter Ring	1013				

Item	Quantity	Part name	Pump Material				
			All 317SS	All Monel	All Nickel	All Hastelloy C	All Hastelloy B
529	1	Lockwasher—Frame Foot-to-Bearing Frame	Steel				
555	1	Tube, Finned Cooling Assembly	304AA / Copper				
555A	1	Tube, Ftg Male (Frame Cooling)	Brass				
555B	2	Connector, Thermocouple (Frame Cooling)	Brass				
555C	2	Elbow, Female (Frame Cooling)	Brass				
555D	1	Conn TC Sealed PWR	Cast iron				
761B	1	i-*ALERT*® Condition Monitor	Stainless steel/epoxy				

Table 27: Construction material and quantity (continued)

Item	Quantity	Part name	Pump Material (3196, HT 3196, CV 3196, 3796)	Pump Material (NM 3196)	Pump Material (3198)
			All Titanium	Vinylester	D.I./Teflon
100	1	Casing	1220	6929	9639
101	1	Impeller	1220	6929	6944
105	1	Lantern Ring	Teflon	–	–
106	1 set	Stuffing Box Packing	Non-asbestos braid	–	–
107	1	Gland—Packed Box	1220	–	–
108	1	Frame Adapter	1013		
109C	1***	Outboard Bearing End Cover	1001		
112A	1	Outboard Bearing	Double row angluar contact (duplex pair for LTi)		
113	2	Plug—Grease Relief	2210		
113B	1	Plug—Oil Fill	2210		
122	1	Shaft—Less Sleeve	2156	2229	–
122	1	Shaft—With Sleeve	2229		6947
126	1	Shaft Sleeve	2156	2229	–
134	1	Bearing Housing	1001		
136	1	Bearing Locknut	Steel		
168A	1	Radial Bearing	Single row ball		
184	1	Seal Chamber/Stuffing Box Cover	1220	6929	9639
193	2	Grease Fitting	Steel		
228	1	Bearing Frame	STi - 1013, All others - 1001		
236A	10	Cap Screw—Bearing Clamp Ring	2210		
239	1	Support, Casing	–	–	–
241	1	Frame Foot	1001		
248	1	Oil Thrower	2210		
250	1	Gland—Mechanical Seal	Material varies		
253B	1	Bearing Clamp Ring	2210		
319	1	Sight Glass	Glass/steel		
332A	1	Outboard Labyrinth Seal w/O-rings	Brass ASTM B505-96		
333A	1	Inboard Labyrinth Seal w/O-rings	Brass ASTM B505-96		
351	1	Casing Gasket	Aramid fiber w/EPDM		
353	4	Gland Stud	2156	2229	2229
355	4	Gland Stud Nut	2156	2229	2229
358	1	Plug—Casing Drain	2156	–	–
358Y	1 ***	Plug, Impeller	2156	–	–
360C	1 ***	Gasket—Thrust End Cover	Buna		
360D	1	Gasket—Frame-to-Adapter	Buna		
360Q	1	Gasket—Gland-to-Stuffing Box Cover	Material varies		
361A	1	Retaining Ring	Steel		
370	****	Bolt—Adapter to Case	2228		
370B	4	Bolt—Frame-to-Adapter	2210		
370C	**	Clamp Bolt —Bearing Housing	2210		
370D	**l	Jack Bolt—Bearing Housing	2210		
370F	2	Bolt—Frame Foot to Frame	2210		

Item	Quantity	Part name	Pump Material (3196, HT 3196, CV 3196, 3796)	Pump Material (NM 3196)	Pump Material (3198)
			All Titanium	Vinylester	D.I./Teflon
370H	2	Stud—Stuffing Box Cover-to-Adapter	2228		
370Y	2	Bolt—Cap Casing to Support	–	–	–
371C	6 ***	Cap Screw-End Cover to Bearing Housing	2210		
382	1	Bearing Lockwasher	Steel		
383	1	Mechanical Seal	Material varies		
400	1	Coupling Key	2210		
408A	1	Plug—Oil Drane	2210		
408H	4	Plug—Oil Mist Connection	2210		
408J	1	Plug—Oiler	2210		
408L	1	Plug—Oil Cooler Inlet	2210		
408M	1	Plug—Oil Cooler Outlet	2210		
408N	1	Plug—Sight Glass	2210		
412A	1	O-Ring, Graphoil Impeller	–	–	–
418	3	Jack Bolt—Adapter-to-Case	2228		
423	3	Jam Nut—Bearing Housing Jack Bolt	2210		
423B	2	Hex Nut—Stuffing Box Cover to Adapter	2228		
428	1	Gasket, Plug	Teflon		
437	1	Lockwasher, Casing to Support	–	–	–
458Y	1 ***	Plug, Impeller	2156	–	–
469B	2	Dowel Pin—Frame-to-Adapter	Steel		
494	1	Tube Element, Finned Cooled	304SS / Copper		
496	1	O-Ring Bearing Housing	Buna N		
412A	1	O-Ring—Impeller	Viton		
497F	1	O-Ring—Outboard Labyrinth Rotor	Viton		
497G	1	O-Ring—Outboard Labyrinth Stator	Viton		
497H	1	O-Ring—Inboard Labyrinth Rotor	Viton		
497J	1	O-Ring—Inboard Laybrinth Stator	Viton		
497L	1	O-Ring Internal (inboard)	Viton		
497N	1	O-Ring Internal (outboard)	Viton		
503	1	Adapter Ring	1013		
529	1	Lockwasher—Frame Foot-to-Bearing Frame	Steel		
555	1	Tube, Finned Cooling Assembly	304AA / Copper		
555A	1	Tube, Ftg Male (Frame Cooling)	Brass		
555B	2	Connector, Thermocouple (Frame Cooling)	Brass		
555C	2	Elbow, Female (Frame Cooling)	Brass		
555D	1	Conn TC Sealed PWR	Cast iron		
761B	1	i-*ALERT*® Condition Monitor	Stainless steel/epoxy		

Table 28: Key to table symbols

–	Not applicable
*	Only applicable for HT 3196
**	3 for STi, MTi, LTi 4 for XLT-i, i17
***	XLT-I and i17 only
****	4 for 6 in. STi 8 for 8 in. STi and MTi 16 for 13 in. MTi, LTi , XLT-I 24 for 15 in. XLT-I 12 for 10 in. MTi, LTi , i17

Table 29: Material-code reference

Material	Goulds material code	ASTM	Din	ISO	JIS
Cast Iron	1001	A48 CLASS 20			
Ductile Iron	1012	A395 Gr60-40-18			
Ductile Iron	1013	A536 Gr60-42-10			
CD4MCu	1041	A744 CD4MCU			
Monel	1119	A494 GrM-35-1			
316SS	1203	A744 CF-8M	1.4408		G5121 (SC514)
Alloy 20	1204	A744CN-7M	1.4500		
317SS	1209	A744CG-8M	1.4448		
Hastelloy C	1215	A494 CW-6M			
CD4MCu	1216	A744CD4MCU	9.4460		
Hastelloy B	1217	A494 N-7M			
Titanium	1220	B367 GrC-3			
Nickel	1601	A494 GrCZ100			
Monel	2150	B164 UNS N04400			
Nickel	2155	B160 UNS N02200			
Titanium	2156	B348 Gr2			
Carbon Steel	2201	A576 Gr. 1018 and 1020			
Carbon Steel	2210	A108Gr1211			
304SS	2228	A276 Type 304			
316SS	2229	A276 Type 316			
Alloy 20	2230	B473 (N08020)			
317SS	2232	A276			
4150 Steel	2237	A322Gr4150			
4140 Steel	2238	A434Gr4140			
4140 Steel	2239	A193 Gr. B7			
Alloy B-2	2247	B335 (N10665)			
Alloy C-276	2248	B574 (N10276)			
GMP-2000	6929	N/A			
PFA Lined Steel	6944	N/A			
PFA Lined 316SS	6947	N/A			
PFA Lined Ductile Iron	9639	N/A			

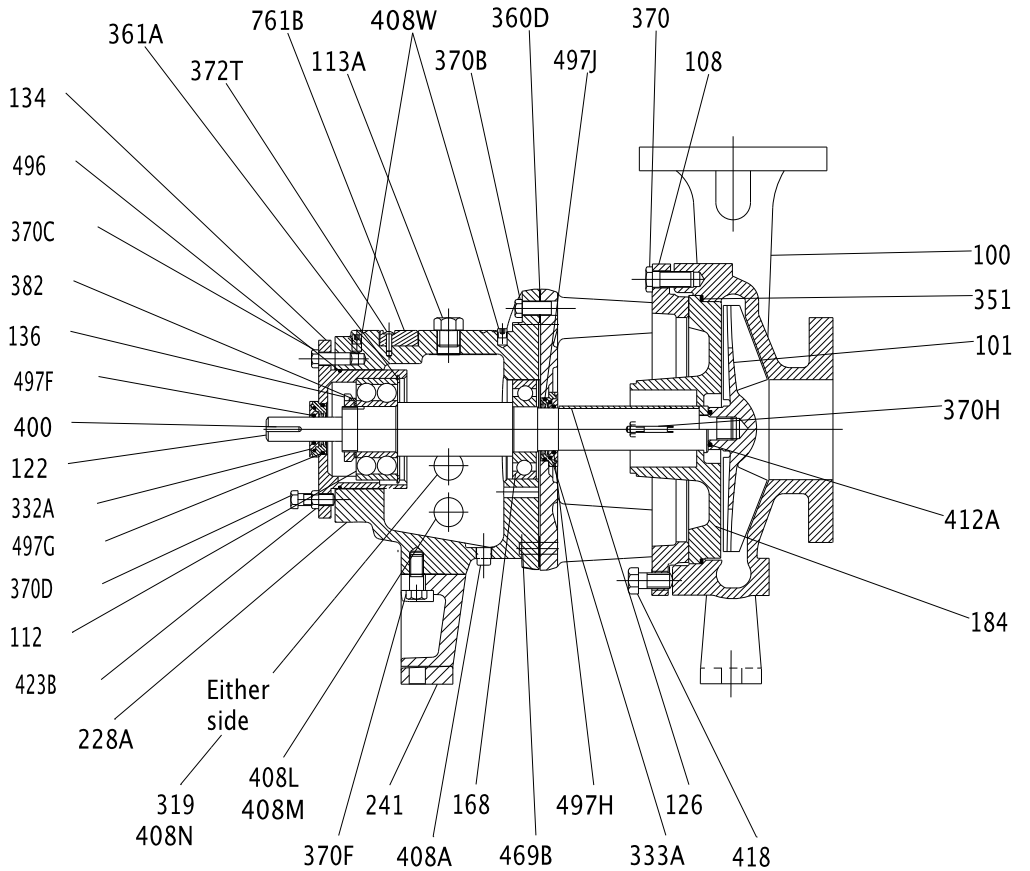

Figure 135: 3196 cross-sectional drawing

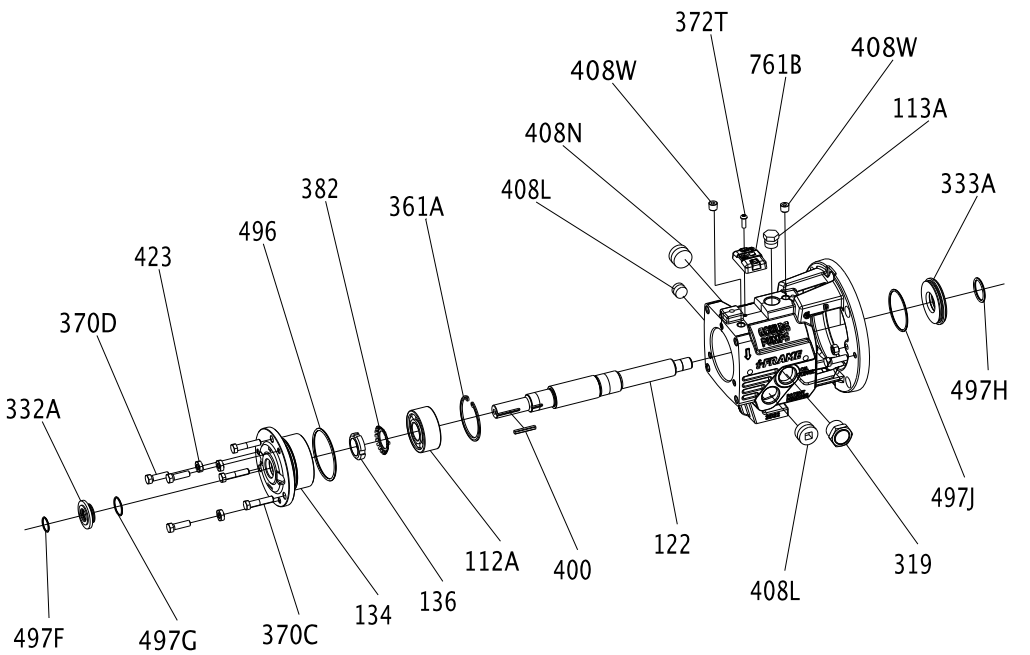

Figure 136: STi bearing-frame exploded view

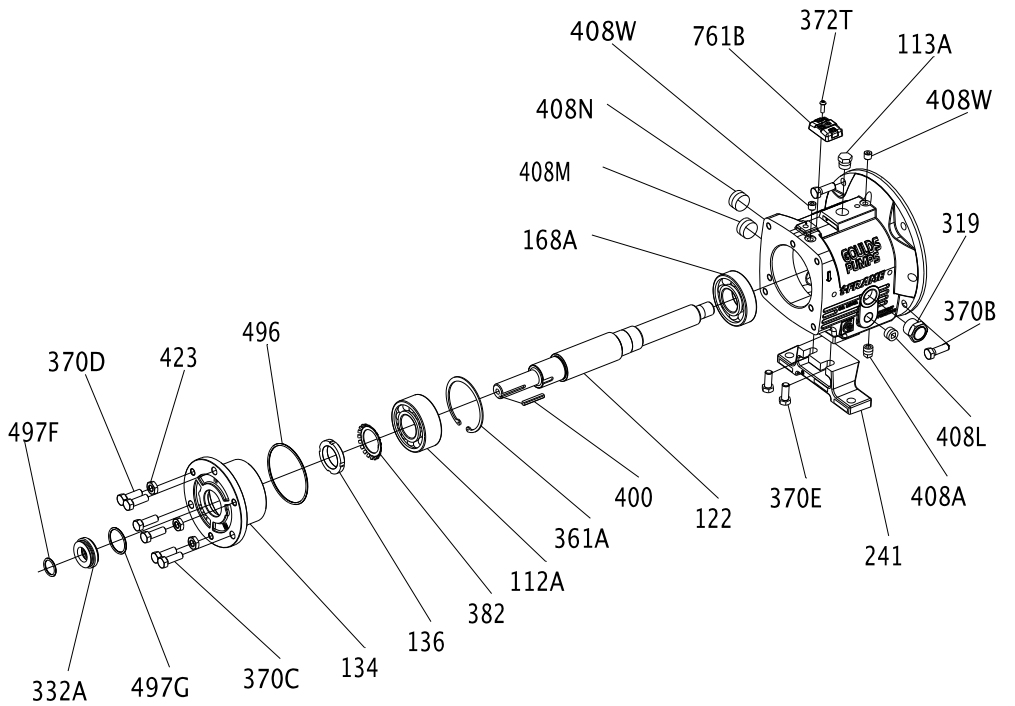

Figure 137: MTi bearing-frame exploded view

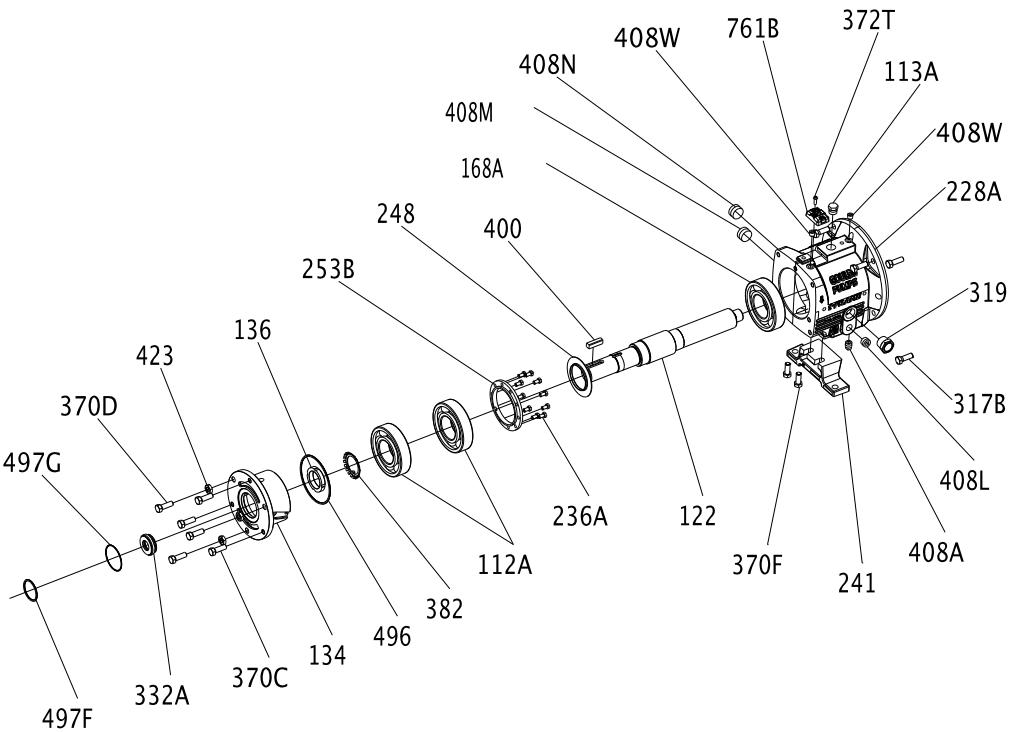

Figure 138: LTi bearing-frame exploded view

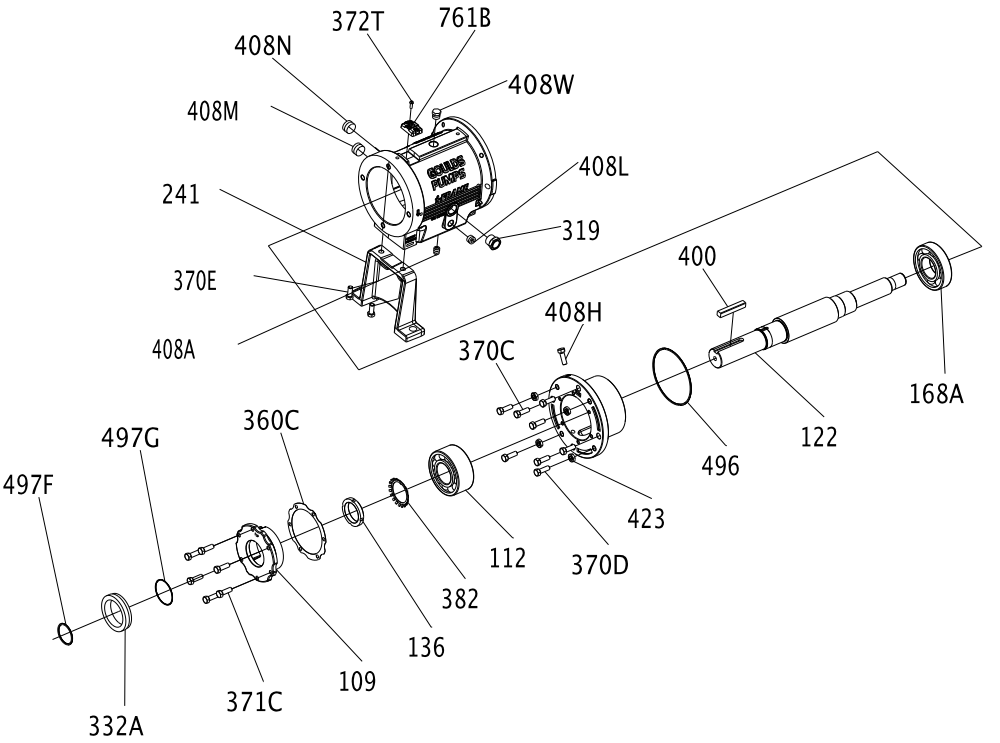

Figure 139: XLT-i bearing-frame exploded view

The finned-tube oil cooler is standard on HT 3196 and optional on all other models.

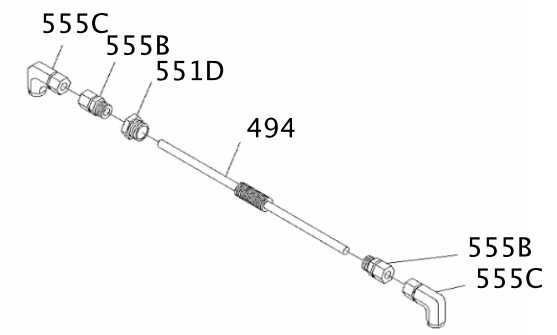

Figure 140: Finned-tube oil cooler exploded view

Certification: CE or CE ATEX

Certificates of conformance

CSA Certificate

CSA INTERNATIONAL

Certificate of Compliance

Certificate: 1992883 Master Contract: 236924

Project: 2254252 Date Issued: 2009/12/16

Issued to: ITT Corporation
240 Fall St
Seneca Falls, NY 13148
USA
Attention: Anthony Stavale

The products listed below are eligible to bear the CSA Mark shown with adjacent indicators 'C' and 'US' for Canada and US or with adjacent indicator 'US' for US only or without either indicator for Canada only.

C SP US

D. Simpson, Certifier

Issued by: D. Simpson, Certifier

PRODUCTS

CLASS 2258 03 - PROCESS CONTROL EQUIPMENT - Intrinsically Safe and Non-Incendive Systems - For Hazardous Locations

CLASS 2258 83 - PROCESS CONTROL EQUIPMENT-Intrinsically Safe and Non-Incendive - Systems-For Hazardous Locations-Certified to U.S. Standards

Class I, Division 1, Group A, B, C and D, Class II, Group E, F and G; Class III

- Condition Monitor, Model LCCM, p/n C07657A, battery operated (non-replaceable, non-rechargeable), intrinsically safe, temperature code T4 (at max ambient of 100C).

APPLICABLE REQUIREMENTS

CAN/CSA-C22.2 No. 0-M91 - General Requirements – Canadian Electrical Code, Part II

CAN/CSA-C22.2 No.157-92 - Intrinsically Safe and Non-Incendive Equipment for Use in Hazardous Locations

UL Std No.913, Ed. 7 - Intrinsically Safe Apparatus and Associated Apparatus for Use in Class I, II and III, Division 1, Hazardous Locations

CSA INTERNATIONAL

Certificate: 1992883 **Master Contract:** 236924

Project: 2254251 **Date Issued:** 2009/12/16

UL Std No. 969, 4th Edition - UL standard for safety marking and labeling systems

MARKINGS

- submittor s identification
- model designation
- date code or serial number
- Hazardous Location designations
- temperature code rating
- maximum ambient temperature
- the CSA Mark, with the C/US indicator
- the warning, WARNING- NOT FOR USE IN ATMOSPHERES CONTAINING ACETIC ACID
- the words "Ex ia" and "Intrinsically safe"

ATEX notification

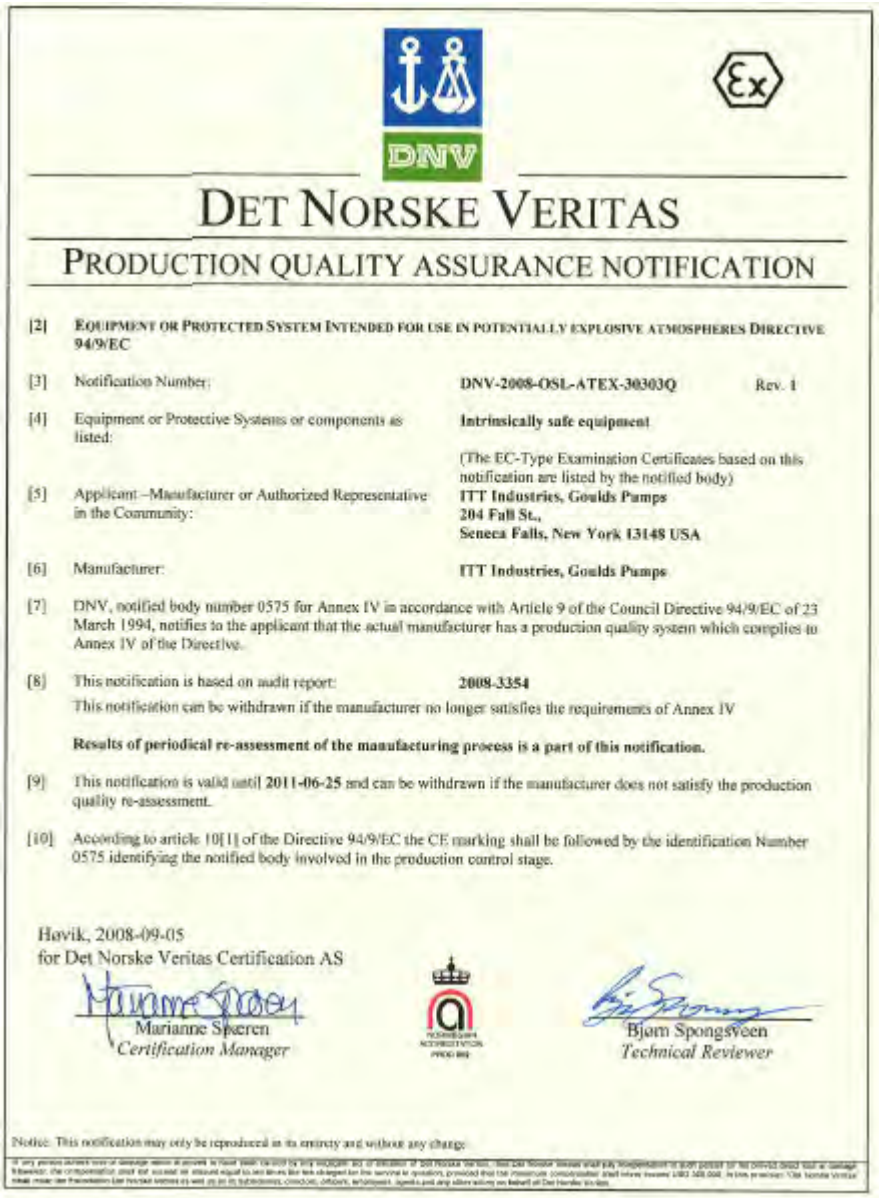

DET NORSKE VERITAS

PRODUCTION QUALITY ASSURANCE NOTIFICATION

[2] EQUIPMENT OR PROTECTED SYSTEM INTENDED FOR USE IN POTENTIALLY EXPLOSIVE ATMOSPHERES DIRECTIVE 94/9/EC

[3] Notification Number: **DNV-2008-OSL-ATEX-30303Q** Rev. 1

[4] Equipment or Protective Systems or components as listed: **Intrinsically safe equipment**

(The EC-Type Examination Certificates based on this notification are listed by the notified body)

[5] Applicant –Manufacturer or Authorized Representative in the Community: **ITT Industries, Goulds Pumps**
204 Fall St.,
Seneca Falls, New York 13148 USA

[6] Manufacturer: **ITT Industries, Goulds Pumps**

[7] DNV, notified body number 0575 for Annex IV in accordance with Article 9 of the Council Directive 94/9/EC of 23 March 1994, notifies to the applicant that the actual manufacturer has a production quality system which complies to Annex IV of the Directive.

[8] This notification is based on audit report: **2008-3354**
This notification can be withdrawn if the manufacturer no longer satisfies the requirements of Annex IV

Results of periodical re-assessment of the manufacturing process is a part of this notification.

[9] This notification is valid until **2011-06-25** and can be withdrawn if the manufacturer does not satisfy the production quality re-assessment.

[10] According to article 10[1] of the Directive 94/9/EC the CE marking shall be followed by the identification Number 0575 identifying the notified body involved in the production control stage.

Høvik, 2008-09-05
for Det Norske Veritas Certification AS

Marianne Speren
Certification Manager

Bjørn Spongsveen
Technical Reviewer

Notice: This notification may only be reproduced in its entirety and without any change.

IECEx Certificate of Conformity

IECEx Certificate of Conformity

INTERNATIONAL ELECTROTECHNICAL COMMISSION
IEC Certification Scheme for Explosive Atmospheres

for rules and details of the IECEx Scheme visit www.iecex.com

Certificate No.: IECEx LCI 08.0038 Issue No.: 0 Certificate history:

Status: Current

Date of Issue: 2008-09-16 Page 1 of 3

Applicant: **ITT Corp.**
Goulds pumps
240 Fall Street
Seneca Falls, NY 13148
United States of America

Electrical Apparatus: **Condition Monitor**
Optional accessory:

Type of Protection: **ia**

Marking: **ITT Corp.**
Goulds pumps
240 Fall Street
Seneca Falls, NY 13148
U.S.A.
Condition Monitor
Type : LCCM, p/n C07667A
Ex ia IIC T4
Tamb : -40°C à 100°C

Approved for issue on behalf of the IECEx Certification Body: Marc Gilleux

Position: Ex Certification Manager

Signature: (for printed version)

Date: le 16 Septembre 2008

1. This certificate and schedule may only be reproduced in full.
2. This certificate is not transferable and remains the property of the issuing body.
3. The Status and authenticity of this certificate may be verified by visiting the Official IECEx Website.

Certificate issued by:

Laboratoire Central des Industries Electriques (LCIE)
33 Avenue du General Leclerc
FR-92260 Fontenay-aux-Roses
France

IECEx Certificate of Conformity

Certificate No.: IECEx LCI 08.0038

Date of Issue: 2008-09-16 Issue No.: 0

Page 2 of 3

Manufacturer: **ITT Corp.**
Goulds pumps
240 Fall Street
Seneca Falls, NY 13148
United States of America

Manufacturing location(s):

This certificate is issued as verification that a sample(s), representative of production, was assessed and tested and found to comply with the IEC Standard list below and that the manufacturer's quality system, relating to the Ex products covered by this certificate, was assessed and found to comply with the IECEx Quality system requirements. This certificate is granted subject to the conditions as set out in IECEx Scheme Rules, IECEx 02 and Operational Documents as amended

STANDARDS:
The electrical apparatus and any acceptable variations to it specified in the schedule of this certificate and the identified documents, was found to comply with the following standards

IEC 60079-0 : 2004 Electrical apparatus for explosive gas atmospheres - Part 0: General requirements
Edition: 4.0
IEC 60079-11 : 2006 Explosive atmospheres - Part 11: Equipment protection by intrinsic safety "i"
Edition: 5

This Certificate does not indicate compliance with electrical safety and performance requirements other than those expressly included in the Standards listed above.

TEST & ASSESSMENT REPORTS:
A sample(s) of the equipment listed has successfully met the examination and test requirements as recorded in

Test Report:

FR/LCIEx/TR08.0043/00

Quality Assessment Report:
NO/DNV/QAR08.0006/00

Chinese Certificate of Conformity

CONFORMITY CERTIFICATE OF EXPLOSION-PROOF

PCEC

Certificate No.: CE082171

Name of Product:	Condition Monitor
Type of Product:	LCCM, p/n C07667A
Marking:	Exia II CT4
Technical Documents:	/
Drawing No.:	C07667A
Note (s):	1.The power is supplied by PANASONIC battery. The battery type is BR2477A 3V. 2.The manufacturer address: Goulds pumps, 240 Fall Street, Seneca Falls, NY 13148, U.S.A.

By verifying the drawings and technical documents and checking samples, the product complies with the following standards currently valid in P.R.China:

GB3836.1-2000 GB3836.4-2000

Issued to: ITT Corp.

Date of Expire: 2013-12-22

Date of Issue: 2008-12-22

Center seal

Director

Xu Gang

PCEC has been approved by

Supervision & Test Center of Ex- products of China Petroleum & Chemical Industry

注: 本证仅对与送检样品一致的产品有效.
Note: This certificate is only valid for the products that are in accord with sample(s) tested and verified.
中心地址:中国天津市卫丁字沽三号路85号 邮政编码:300131 电话/传真:022-26651066/26689116
Center Add: No.85 No.3 Road DingZiGu Tianjin China Post code: 300131 Tel/ Fax: 022-26651066/26689116
E-mail:csc@pcec.com.cn http://www.pcec.com.cn

Other Relevant Documentation or Manuals

For additional documentation

For any other relevant documentation or manuals, contact your ITT representative.

Local ITT Contacts

Regional offices

Region	Address	Telephone	Fax
North America (Headquarters)	ITT - Goulds Pumps 240 Fall Street Seneca Falls, NY 13148 USA	+1 315-568-2811	+1 315-568-2418
Asia Pacific	ITT Industrial Process 10 Jalan Kilang #06-01 Singapore 159410	+65 627-63693	+65 627-63685
Europe	ITT - Goulds Pumps Millwey Rise Industrial Estate Axminster, Devon, England EX13 5HU	+44 1297-630250	+44 1297-630256
Latin America	ITT - Goulds Pumps Camino La Colina # 1448 Condominio Industrial El Rosal Huechuraba Santiago 8580000 Chile	+562 544-7000	+562 544-7001
Middle East and Africa	ITT - Goulds Pumps Achileos Kyrou 4 Neo Psychiko 115 25 Athens Greece	+30 210-677-0770	+30 210-677-5642

Visit our website for the latest version of this document and more information:
http://www.gouldspumps.com

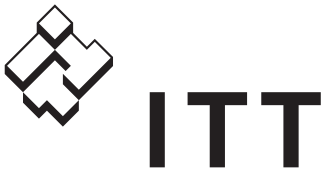

ENGINEERED FOR LIFE

240 Fall Street
Seneca Falls, NY 13148
USA
Tel. 1-800-446-8537
Fax (315) 568-2418

© 2016 ITT Corporation
The original instruction is in English. All non-English instructions are translations of the original instruction.

Form IOM.3196.i-FRAME.en-US.2016-04

Technical Data

Allen-Bradley

PowerFlex Digital DC Drive

Table of Contents

Topic	Page
Additional Resources	2
Product Description	2
Standard Drives Program	3
Catalog Number Explanation	5
Standard Drives Product Selection	6
Factory Installed Options	8
User Installed Options	9
Installation Considerations	19
Circuit Protection	50
Mounting	66
Approximate Dimensions	67
PowerFlex DC Configured Drives	73
Specifications	79
Watts Loss and Fan Attributes	81

LISTEN. THINK. SOLVE.®

Additional Resources

These documents contain additional information concerning related products from Rockwell Automation.

Resource	Description
PowerFlex Digital DC Drive User Manual, publication 20P-UM001	Provides basic information needed to install, start-up, and troubleshoot the PowerFlex DC drive.
A Global Reference Guide for Reading Schematic Diagrams, publication 100-2.10	Provides a simple cross-reference of common schematic/wiring diagram symbols used throughout various parts of the world.
Guarding Against Electrostatic Damage, publication 8000-4.5.2	Explains the causes of ESD and how to guard against its effects.
Preventive Maintenance of Industrial Control and Drive System Equipment, publication DRIVES-TD001	Provides a checklist to use as a guide in performing preventive maintenance.
Safety Guidelines for the Application, Installation and Maintenance of Solid State Control, publication SGI-1.1	Provides general guidelines for the application, installation, and maintenance of solid state control in the form of individual devices or packaged assemblies incorporating solid state components.
Industrial Automation Wiring and Grounding Guidelines, publication 1770-4.1	Provides general guidelines for installing a Rockwell Automation industrial system.
Product Certifications website, http://www.ab.com	Provides declarations of conformity, certificates, and other certification details.

You can view or download publications at http://www.rockwellautomation.com/literature/. To order paper copies of technical documentation, contact your local Allen-Bradley distributor or Rockwell Automation sales representative.

For other information, contact Allen-Bradley Drives Technical Support:

Title	Online at . . .
Allen-Bradley Drives Technical Support	www.ab.com/support/abdrives

Product Description

The PowerFlex Digital DC drive provides digital control for precise speed and current regulation, easy programmability, extensive diagnostics, non-regenerative and regenerative operation, and is easily interfaced for integration into larger drive systems. PowerFlex DC drives are well suited to a variety of applications including extruding operations, finishing, drawing, and coating processes, applications exhibiting shock loads, high inertia, rapid accel/decel or continuous regeneration, and is an excellent choice for existing DC machinery upgrades. The compact design of this drive includes a fully contained power module and a common control structure for the entire range of horsepower. And, to make connectivity even easier, the PowerFlex DC drive provides a standard DPI interface that is compatible with all PowerFlex DPI communication products.

The standard hardware offering consists of an open type enclosure, armature converter, regulated field converter for field weakening or economy applications, an advanced regulator with integrated DPI functionality, DC tachometer and encoder capability.

Standard Drives Program

Packaging and Mounting

- **IP20, NEMA/UL Type Open** - For conventional mounting inside or outside a control cabinet.

Easy to Use Communication Tools

The PowerFlex Digital DC drive provides common communication tools that are familiar and easy to use, including the LCD Human Interface Module (HIM) and PC-based configuration tools.

- The LCD HIM provides:
  - Large and easy to read 7 line x 21 character, backlit display
  - Alternate function keys for shortcuts to common tasks
  - "Calculator-like" number pad for fast and easy data entry (Full Numeric version only)
  - Control keys for local start, stop, speed, and direction
  - Remote versions for panel mount applications
- PC-based Configuration tools include:
  - DriveExplorer™ and DriveExplorer Lite (v5.02 or higher). A simple and flexible "On-line" tool for monitoring and configuring while connected to a drive.
  - DriveTools™ SP (v4.01 or higher is required with a PowerFlex DC drive specific software patch. The patch can be downloaded from http://www.ab.com/support/abdrives/webupdate/). A suite of software tools which provide an intuitive means for programming, troubleshooting and maintaining Allen-Bradley drives, including the PowerFlex DC Drive Start-Up Wizard.
- Internal Communications allow you to integrate the drive into the manufacturing process. Status indicators for all internal communication options are visible on the cover for easy setup and monitoring of drive communications. You can easily manage information from "shop floor to top floor" and seamless integrate a complete system as you control, configure and collect data.

Drive Features

- Fast-acting **Current Limit** and **Voltage Regulation** result in maximum accel/decel without tripping.
- **High speed analog inputs** improve drive response to torque or speed commands.
- **Programming flexibility** allows parameters to be linked within the drive.
- **Field flashable firmware** through DPI interface.
- **Flying Start** delivers smooth and instantaneous connection into rotating loads, regardless of commanded direction, without the need for any speed feedback.
- **Single Phase Regulated Field supply** (10, 14, & 20A) standard on all frames.
- **Integral Process PI Control** can eliminate the need for a separate process loop controller.
- **Speed Regulation** - Open Loop or Closed Loop
  - Armature Feedback provides a 2000:1 rpm speed range
  - DC Tachometer Feedback provides up to 0.1% speed regulation
  - Encoder Feedback provides up to 0.1% speed regulation for the tightest application requirements.
- **Torque Regulation** - Open Loop or Closed Loop
  - Open Loop torque regulation provides ±5% regulation.
  - Encoder Feedback provides ±2% regulation and the ability to hold full load at zero speed.

Unsurpassed Capability in Network Communications

PowerFlex drives are fully compatible with the wide variety of Allen-Bradley DPI™ communication adapters, offering the following benefits:

ControlNet™	DeviceNet™	EtherNet/IP™	Interbus™	PROFIBUS™	Remote I/O	RS485 DF1	Description
✔	✔	✔					**(Unconnected Messaging)** permits other network devices (e.g. PanelView™) to communicate directly to a drive without routing the communication through the network scanner.
✔	✔	✔				✔	**Adapter Routing** - Plug PC into one drive and talk to all other Allen-Bradley drives on same network, without being routed through network scanner.
✔	✔	✔	✔	✔	✔	✔	Access to 100% of all parameters over the network.
	✔	✔		✔			**AutoBaud** capability makes initial connections less problematic.
	✔						**Change of State** significantly reduces network traffic by configuring control messages to be sent only upon customer defined states. Very flexible configuration for each node (Example: "reference must change by more than 5%").
	✔	✔					**Peer Control** provides master-slave type control between drives, where one or more slave drives (consumers) can run based on the status of a master drive (producer), which can also significantly reduce network traffic.
	✔						**ADR (Automatic Device Replacement)** saves significant time and effort when replacing a drive, by allowing the scanner to be configured to automatically detect a new drive and download the required parameter settings.
✔	✔	✔	✔	✔	✔	✔	**Flexible Fault Configuration** - Adapters can be programmed to take fault based actions as ramp to stop, coast-to-stop and hold last state, as well as send user configurable logic control and speed reference values. In addition, different actions can be taken based on whether the network experienced a serious problem (broken cable etc.) versus network idle condition (PLC set to "Program").

Catalog Number Explanation

Position

1-3	4	5	6	7	8-10	11	12	13	14	15	16
20P	4	1	A	D	4P1	R	A	0	N	N	N
a	*b*	*c*	*d*	*e*	*f*	*g*	*h*	*i*	*j*	*k*	*l*

a

Drive	
Code	Type
20P	PowerFlex DC

b

Motor Operation	
Code	Type
2	Two Quadrant Operation ∗
4	Four Quadrant Operation

∗ Not available for 230V AC input drives.

c

Input Type	
Code	Type
1	6 Pulse

d

Enclosure		
Code	Enclosure Rating	Conform. Coat
A	IP20, NEMA/UL Type Open	No

e

Input Voltage	
Code	Voltage
B	230V AC
D	460V AC ∗
E	600V AC
F	690V AC

∗ Use this code for 400V AC input applications.

f1

230V, 60 Hz Input				
Code	Hp	Armature Amps	Frame	Field Amps
7P0	1.5	7	A	10
9P0	2	9	A	10
012	3	12	A	10
020	5	20	A	10
029	7.5	29	A	10
038	10	38	A	10
055	15	55	A	10
073	20	73	A	14
093	25	93	A	14
110	30	110	A	14
146	40	146	B	20
180	50	180	B	20
218	60	218	B	20
265	75	265	B	20
360	100	360	B	20
434	125	434	B	20
521	150	521	C	20
700	200	700	C	20
875	250	875	D	40
1K0	300	1050	D	40

f2

460V, 60 Hz Input				
Code	Hp	Armature Amps	Frame	Field Amps
4P1	2	4.1	A	10
6P0	3	6	A	10
010	5	10	A	10
014	7.5	14	A	10
019	10	19	A	10
027	15	27	A	10
035	20	35	A	10
045	25	45	A	10
052	30	52	A	10
073	40	73	A	14
086	50	86	A	14
100	60	100	A	14
129	75	129	A	14
167	100	167	B	20
207	125	207	B	20
250	150	250	B	20
330	200	330	B	20
412	250	412	B	20
495	300	495	C	20
667	400	667	C	20
830	500	830	D	40
996	600	996	D	40
1K1	700	1162	D	70
1K3	800	1328	D	70
1K4	900	1494	D	70

f3 ∗

575V, 60 Hz Input				
Code	Hp	Armature Amps	Frame	Field Amps
067	50	67.5	B	20
101	75	101.3	B	20
135	100	135	B	20
270	200	270	B	20
405	300	405	B	20
540	400	504	C	20
675	500	675	C	20
810	600	810	D	40
1K0	800	1080	D	40
1K2	900	1215	D	40
1K3	1000	1350	D	40
1K6	1250	1668	D	40

f4 ∗

690V, 60 Hz Input				
Code	Hp	Armature Amps	Frame	Field Amps
452	400	452	C	20
565	500	565	C	20
678	600	678	D	40
791	700	791	D	40
904	800	904	D	40
1K0	900	1017	D	40
1K1	1000	1130	D	70
1K2	1100	1243	D	70
1K4	1250	1413	D	70
1K5	1400	1582	D	70

Catalog Number Explanation, continued

Position	1-3	4	5	6	7	8-10	11	12	13	14	15	16
	20P	4	1	A	D	4P1	R	A	0	N	N	N
	a	*b*	*c*	*d*	*e*	*f*	*g*	*h*	*i*	*j*	*k*	*l*

g

Field Supply	
Code	Type
R	Single-Phase Regulated

h

Packaging/Documentation		
Code	Shipping Carton	User Manual
A	Yes	Yes

i

HIM	
Code	Operator Interface
0	Blank Cover ∗

∗ Standard - for user installed options, see Human Interface and Wireless Interface Modules on page 9.

j

I/O Options∗	
Code	Control
N	None (8 - 24V DC Digital Inputs & Outputs, 3 Analog Outputs and 2 Analog Inputs are Standard)

∗ All I/O Options are purchased separately and are user installed. See I/O Options on page 9.

k

Communication Options	
Code	Description
N	None ∗

∗ Standard - for user installed options, see Communication Option Kits on page 10.

l

Cabinet Options	
Code	Type
N	None

Standard Drives Product Selection

IP20, NEMA/UL Type Open (Position d = A)

All drives are rated 150% overload for 60 seconds, 200% for three seconds.

230V AC, Three-Phase

Drive Output Rating			Non-Regenerative Drives[1]	Regenerative Drives	Frame Size
Normal Duty kW	Normal Duty HP	Amps	Cat. No.	Cat. No.	
1.2	1.5	7	20P21AB7P0RA0NNN	20P41AB7P0RA0NNN	A
1.5	2	9	20P21AB9P0RA0NNN	20P41AB9P0RA0NNN	A
2.2	3	12	20P21AB012RA0NNN	20P41AB012RA0NNN	A
3.7	5	20	20P21AB020RA0NNN	20P41AB020RA0NNN	A
5.5	7.5	29	20P21AB029RA0NNN	20P41AB029RA0NNN	A
7.5	10	38	20P21AB038RA0NNN	20P41AB038RA0NNN	A
11	15	55	20P21AB055RA0NNN	20P41AB055RA0NNN	A
15	20	73	20P21AB073RA0NNN	20P41AB073RA0NNN	A
18.5	25	93	20P21AB093RA0NNN	20P41AB093RA0NNN	A
22	30	110	20P21AB110RA0NNN	20P41AB110RA0NNN	A
30	40	146	20P21AB146RA0NNN	20P41AB146RA0NNN	B
37	50	180	20P21AB180RA0NNN	20P41AB180RA0NNN	B
45	60	218	20P21AB218RA0NNN	20P41AB218RA0NNN	B
56	75	265	20P21AB265RA0NNN	20P41AB265RA0NNN	B
75	100	360	20P21AB360RA0NNN	20P41AB360RA0NNN	B

Drive Output Rating			Non-Regenerative Drives[1]	Regenerative Drives	Frame Size
Normal Duty kW	Normal Duty HP	Amps	Cat. No.	Cat. No.	
93	125	434	20P21AB434RA0NNN	20P41AB434RA0NNN	B
112	150	521	20P21AB521RA0NNN	20P41AB521RA0NNN	C
149	200	700	20P21AB700RA0NNN	20P41AB700RA0NNN	C
186	250	875	20P21AB875RA0NNN	20P41AB875RA0NNN	D
224	300	1050	20P21AB1K0RA0NNN	20P41AB1K0RA0NNN	D

(1) Currently not available for sale.

460V AC, Three-Phase

Drive Output Rating			Non-Regenerative Drives	Regenerative Drives	Frame Size
Normal Duty kW	Normal Duty HP	Amps	Cat. No.	Cat. No.	
1.5	2	4.1	20P21AD4P1RA0NNN	20P41AD4P1RA0NNN	A
2.2	3	6	20P21AD6P0RA0NNN	20P41AD6P0RA0NNN	A
3.7	5	10	20P21AD010RA0NNN	20P41AD010RA0NNN	A
5.5	7.5	14	20P21AD014RA0NNN	20P41AD014RA0NNN	A
7.5	10	19	20P21AD019RA0NNN	20P41AD019RA0NNN	A
11	15	27	20P21AD027RA0NNN	20P41AD027RA0NNN	A
15	20	35	20P21AD035RA0NNN	20P41AD035RA0NNN	A
18.5	25	45	20P21AD045RA0NNN	20P41AD045RA0NNN	A
22	30	52	20P21AD052RA0NNN	20P41AD052RA0NNN	A
30	40	73	20P21AD073RA0NNN	20P41AD073RA0NNN	A
37	50	86	20P21AD086RA0NNN	20P41AD086RA0NNN	A
45	60	100	20P21AD100RA0NNN	20P41AD100RA0NNN	A
56	75	129	20P21AD129RA0NNN	20P41AD129RA0NNN	A
75	100	167	20P21AD167RA0NNN	20P41AD167RA0NNN	B
93	125	207	20P21AD207RA0NNN	20P41AD207RA0NNN	B
112	150	250	20P21AD250RA0NNN	20P41AD250RA0NNN	B
149	200	330	20P21AD330RA0NNN	20P41AD330RA0NNN	B
187	250	412	20P21AD412RA0NNN	20P41AD412RA0NNN	B
224	300	495	20P21AD495RA0NNN	20P41AD495RA0NNN	C
298	400	667	20P21AD667RA0NNN	20P41AD667RA0NNN	C
373	500	830	20P21AD830RA0NNN	20P41AD830RA0NNN	D
447	600	996	20P21AD996RA0NNN	20P41AD996RA0NNN	D
552	700	1162	20P21AD1K1RA0NNN	20P41AD1K1RA0NNN	D
597	800	1328	20P21AD1K3RA0NNN	20P41AD1K3RA0NNN	D
671	900	1494	20P21AD1K4RA0NNN	20P41AD1K4RA0NNN	D

575V AC, Three-Phase

Drive Output Rating			Non-Regenerative Drives	Regenerative Drives	Frame Size
Normal Duty kW	Normal Duty HP	Amps	Cat. No.	Cat. No.	
37	50	67.5	20P21AE067RA0NNN	20P41AE067RA0NNN	B
56	75	101.3	20P21AE101RA0NNN	20P41AE101RA0NNN	B
75	100	135	20P21AE135RA0NNN	20P41AE135RA0NNN	B
149	200	270	20P21AE270RA0NNN	20P41AE270RA0NNN	B
224	300	405	20P21AE405RA0NNN	20P41AE405RA0NNN	B
298	400	540	20P21AE540RA0NNN	20P41AE540RA0NNN	C
373	500	675	20P21AE675RA0NNN	20P41AE675RA0NNN	C
447	600	810	20P21AE810RA0NNN	20P41AE810RA0NNN	D
597	800	1080	20P21AE1K0RA0NNN	20P41AE1K0RA0NNN	D
671	900	1215	20P21AE1K2RA0NNN	20P41AE1K2RA0NNN	D
746	1000	1350	20P21AE1K3RA0NNN	20P41AE1K3RA0NNN	D
932	1250	1688	20P21AE1K6RA0NNN	20P41AE1K6RA0NNN	D

690V AC, Three-Phase

Drive Output Rating			Non-Regenerative Drives	Regenerative Drives	Frame Size
Normal Duty kW	Normal Duty HP	Amps	Cat. No.	Cat. No.	
298	400	452	20P21AF452RA0NNN	20P41AF452RA0NNN	C
373	500	565	20P21AF565RA0NNN	20P41AF565RA0NNN	C
447	600	678	20P21AF678RA0NNN	20P41AF678RA0NNN	D
552	700	791	20P21AF791RA0NNN	20P41AF791RA0NNN	D
597	800	904	20P21AF904RA0NNN	20P41AF904RA0NNN	D
671	900	1017	20P21AF1K0RA0NNN	20P41AF1K0RA0NNN	D
746	1000	1130	20P21AF1K1RA0NNN	20P41AF1K1RA0NNN	D
820	1100	1243	20P21AF1K2RA0NNN	20P41AF1K2RA0NNN	D
932	1250	1413	20P21AF1K4RA0NNN	20P41AF1K4RA0NNN	D
1044	1400	1582	20P21AF1K5RA0NNN	20P41AF1K5RA0NNN	D

Factory Installed Options

Each PowerFlex DC drive includes one encoder and DC analog tachometer input. No other factory installed options are available at this time.

User Installed Options

Human Interface and Wireless Interface Modules

20-HIM-A0

20-HIM-A3

20-HIM-A5

20-HIM-A6

20-HIM-C3S

20-HIM-C5S

Description	Handheld/Local (Drive Mount) Cat. No.	Remote (Panel Mount) IP66, NEMA/UL Type 4x/12 ∗ Cat. No.
No HIM (Blank Plate)	20-HIM-A0	–
LCD Display, Full Numeric Keypad	20-HIM-A3	20-HIM-C3S ‡
LCD Display, Programmer Only	20-HIM-A5	20-HIM-C5S ‡
Enhanced, LCD, Full Numeric	20-HIM-A6	

∗ For indoor use only.
‡ Includes a 1202-C30 interface cable (3 meters) for connection to drive.

Human Interface Module Accessories

Description	Cat. No.
Bezel Kit for LCD HIMs, NEMA/UL Type 1 ‡	20-HIM-B1
PowerFlex HIM Interface Cable, 1 m (39 in) ∗	20-HIM-H10
Cable Kit (Male-Female) ➢	
0.33 Meters (1.1 Feet)	1202-H03
1 Meter (3.3 Feet)	1202-H10
3 Meter (9.8 Feet)	1202-H30
9 Meter (29.5 Feet)	1202-H90
DPI/SCANport™ One to Two Port Splitter Cable	1203-S03

‡ Includes a 1202-C30 interface cable (3 meters) for connection to drive.
∗ Required only when HIM is used as handheld or remote.
➢ Required in addition to 20-HIM-H10 for distances up to a total maximum of 10 Meters (32.8 Feet).

I/O Option Kit

Description	Cat. No.
I/O Expansion board	20P-S5V62
115V AC to 24V DC 8 Channel I/O Converter Board	20P-S520L

Feedback Option Kit

Description	Cat. No.
Resolver Feedback Option Module	20P-RES-A0

User Installed Options, continued

Communication Option Kits

Description	Cat. No.
BACnet® MS/TP RS485 Communication Adapter	20-COMM-B
ControlNet™ Communication Adapter (Coax)	20-COMM-C
DeviceNet™ Communication Adapter	20-COMM-D
EtherNet/IP™ Communication Adapter	20-COMM-E
HVAC Communication Adapter ❖	20-COMM-H
Interbus™ Communication Adapter	20-COMM-I
PROFIBUS™ DP Communication Adapter	20-COMM-P
ControlNet™ Communication Adapter (Fiber)	20-COMM-Q
Remote I/O Communication Adapter	20-COMM-R
RS485 DF1 Communication Adapter	20-COMM-S
External Communications Kit Power Supply	20-XCOMM-AC-PS1
DPI External Communications Kit	20-XCOMM-DC-BASE
External DPI I/O Option Board ✦	20-XCOMM-IO-OPT1
Compact I/O to DPI/SCANport Module	1769-SM1
Serial Null Modem Adapter	1203-SNM
Smart Self-powered Serial Converter (RS232) includes 1203-SFC and 1202-C10 Cables	1203-SSS
Universal Serial Bus™ (USB) Converter includes 2m USB, 20-HIM-H10 & 22-HIM-H10 Cables	1203-USB

✦ For use only with External DPI Communications Kits 20-XCOMM-DC-BASE.

PC Programming Software

Description	
DriveTools™ SP Software ✦	See publication 9303-PL002… for ordering/pricing information.
DriveExplorer™ Software (Lite/Full) ✦ ❖	
Pocket DriveExplorer™ Software	

✦ Set-up wizards are available for use with DriveTools SP and DriveExplorer (Lite/Full) only.

❖ DriveExplorer Lite is available for free download at: http://www.ab.com/drives/driveexplorer/free_download.html

Isolation Transformers

Isolation Transformers are available for installations that have specific types of AC supply configurations or require drive protection due to AC line disturbances.

Three Phase Primary Voltage			Three Phase Secondary Voltage		
kVA	**kW (HP)**	**Voltage**	**230V AC Catalog Number**	**460V AC Catalog Number**	**575V AC Catalog Number**
5	1.2 - 2.2 (1.5 - 3)	230	1321-3TW005-AA	1321-3TW005-AB	N/A
		460	1321-3TW005-BA	1321-3TW005-BB	N/A
		575	1321-3TW005-CA	1321-3TW005-CB	N/A
7.5	3.7 (5)	230	1321-3TW007-AA	1321-3TW007-AB	N/A
		460	1321-3TW007-BA	1321-3TW007-BB	N/A
		575	1321-3TW007-CA	1321-3TW007-CB	N/A
11	5.5 (7.5)	230	1321-3TW011-AA	1321-3TW011-AB	N/A
		460	1321-3TW011-BA	1321-3TW011-BB	N/A
		575	1321-3TW011-CA	1321-3TW011-CB	N/A
14	7.5 (10)	230	1321-3TW014-AA	1321-3TW014-AB	N/A
		460	1321-3TW014-BA	1321-3TW014-BB	N/A
		575	1321-3TW014-CA	1321-3TW014-CB	N/A
20	11 (15)	230	1321-3TW020-AA	1321-3TW020-AB	N/A
		460	1321-3TW020-BA	1321-3TW020-BB	N/A
		575	1321-3TW020-CA	1321-3TW020-CB	N/A
27	15 (20)	230	1321-3TW027-AA	1321-3TW027-AB	N/A
		460	1321-3TW027-BA	1321-3TW027-BB	N/A
		575	1321-3TW027-CA	1321-3TW027-CB	N/A

Three Phase Primary Voltage			Three Phase Secondary Voltage		
kVA	kW (HP)	Voltage	230V AC Catalog Number	460V AC Catalog Number	575V AC Catalog Number
34	18.5 (25)	230	1321-3TW034-AA	1321-3TW034-AB	N/A
		460	1321-3TW034-BA	1321-3TW034-BB	N/A
		575	1321-3TW034-CA	1321-3TW034-CB	N/A
40	22 (30)	230	1321-3TW040-AA	1321-3TW040-AB	N/A
		460	1321-3TW040-BA	1321-3TW040-BB	N/A
		575	1321-3TW040-CA	1321-3TW040-CB	N/A
51	30 (40)	230	1321-3TW051-AA	1321-3TW051-AB	N/A
		460	1321-3TW051-BA	1321-3TW051-BB	N/A
		575	1321-3TW051-CA	1321-3TW051-CB	N/A
63	37 (50)	230	1321-3TH063-AA	1321-3TH063-AB	1321-3TH063-AC
		460	1321-3TH063-BA	1321-3TH063-BB	1321-3TH063-BC
		575	1321-3TH063-CA	1321-3TH063-CB	1321-3TH063-CC
75	45 (60)	230	1321-3TH075-AA	1321-3TH075-AB	1321-3TH075-AC
		460	1321-3TH075-BA	1321-3TH075-BB	1321-3TH075-BC
		575	1321-3TH075-CA	1321-3TH075-CB	1321-3TH075-CC
93	56 (75)	230	1321-3TH093-AA	1321-3TH093-AB	1321-3TH093-AC
		460	1321-3TH093-BA	1321-3TH093-BB	1321-3TH093-BC
		575	1321-3TH093-CA	1321-3TH093-CB	1321-3TH093-CC
118	75 (100)	230	1321-3TH118-AA	1321-3TH118-AB	1321-3TH118-AC
		460	1321-3TH118-BA	1321-3TH118-BB	1321-3TH118-BC
		575	1321-3TH118-CA	1321-3TH118-CB	1321-3TH118-CC
145	93 (125)	230	1321-3TH145-AA	1321-3TH145-AB	1321-3TH145-AC
		460	1321-3TH145-BA	1321-3TH145-BB	1321-3TH145-BC
		575	1321-3TH145-CA	1321-3TH145-CB	1321-3TH145-CC
175	112 (150)	230	1321-3TH175-AA	1321-3TH175-AB	1321-3TH175-AC
		460	1321-3TH175-BA	1321-3TH175-BB	1321-3TH175-BC
		575	1321-3TH175-CA	1321-3TH175-CB	1321-3TH175-CC
220	145 (200)	230	1321-3TH220-AA	1321-3TH220-AB	1321-3TH220-AC
		460	1321-3TH220-BA	1321-3TH220-BB	1321-3TH220-BC
		575	1321-3TH220-CA	1321-3TH220-CB	1321-3TH220-CC
275	187 (250)	230	1321-3TH275-AA	1321-3TH275-AB	1321-3TH275-AC
		460	1321-3TH275-BA	1321-3TH275-BB	1321-3TH275-BC
		575	1321-3TH275-CA	1321-3TH275-CB	1321-3TH275-CC
330	224 (300)	230	1321-3TH330-AA	1321-3TH330-AB	1321-3TH330-AC
		460	1321-3TH330-BA	1321-3TH330-BB	1321-3TH330-BC
		575	1321-3TH330-CA	1321-3TH330-CB	1321-3TH330-CC
440	298 (400)	230	N/A	1321-3TH440-AB	1321-3TH440-AC
		460	N/A	1321-3TH440-BB	1321-3TH440-BC
		575	N/A	1321-3TH440-CB	1321-3TH440-CC
550	373 (500)	230	N/A	1321-3TH550-AB	1321-3TH550-AC
		460	N/A	1321-3TH550-BB	1321-3TH550-BC
		575	N/A	1321-3TH550-CB	1321-3TH550-CC
660	448 (600)	230	N/A	1321-3TH660-AB	1321-3TH660-AC
		460	N/A	1321-3TH660-BB	1321-3TH660-BC
		575	N/A	1321-3TH660-CB	1321-3TH660-CC
770	522 (700)	230	N/A	1321-3TH770-AB	1321-3TH770-AC
		460	N/A	1321-3TH770-BB	1321-3TH770-BC
		575	N/A	1321-3TH770-CB	1321-3TH770-CC
880	597 (800)	230	N/A	1321-3TH880-AB	1321-3TH880-AC
		460	N/A	1321-3TH880-BB	1321-3TH880-BC
		575	N/A	1321-3TH880-CB	1321-3TH880-CC

AC Input Line Reactors and Contactors

If a DC Contactor is used, an AC Input contactor is not needed.

230V AC Input Drives

Non-Regenerative Drive Cat. No.	Regenerative Drive Cat. No.	DC Amps	AC Line Amps	HP	IP00 (Open Style) Line Reactor Cat No.	Line Reactor kW (HP)	AC Input Contactor Cat. No.
20P21AB7P0	20P41AB7P0	7	5.7	1.5	1321-3R8-A	.75 (1)	100-C12D10
20P21AB9P0	20P41AB9P0	9	7.4	2	1321-3R12-A	1.49 (2)	100-C12D10
20P21AB012	20P41AB012	12	9.8	3	1321-3R18-A	0.75-3.7 (1-5)	100-C12D10
20P21AB020	20P41AB020	20	16	5	1321-3R18-A	0.75-3.7 (1-5)	100-C23D10
20P21AB029	20P41AB029	29	24	7.5	1321-3R55-A	5.5-11 (7.5-15)	100-C30D10
20P21AB038	20P41AB038	38	31	10	1321-3R55-A	5.5-11 (7.5-15)	100-C37D10
20P21AB055	20P41AB055	55	45	15	1321-3R55-A	5.5-11 (7.5-15)	100-C60D10
20P21AB073	20P41AB073	73	60	20	1321-3R80-A	15 (20)	100-C60D10
20P21AB093	20P41AB093	93	76	25	1321-3R100-A	18.5-22 (25-30)	100-C85D10
20P21AB110	20P41AB110	110	90	30	1321-3R100-A	18.5-22 (25-30)	100-D110D11
20P21AB146	20P41AB146	146	119	40	1321-3R160-A	30-37 (40-50)	100-D140D11
20P21AB180	20P41AB180	180	147	50	1321-3R160-A	30-37 (40-50)	100-D180D11
20P21AB218	20P41AB218	218	178	60	1321-3RB250-A	45-56 (60-75)	100-D180D11
20P21AB265	20P41AB265	265	217	75	1321-3RB250-A	45-56 (60-75)	100-D250ED11
20P21AB360	20P41AB360	360	294	100	1321-3RB320-A	75 (100)	100-D300ED11
20P21AB434	20P41AB434	434	355	125	1321-3RB400-A	93 (125)	100-D420ED11
20P21AB521	20P41AB521	521	426	150	1321-3R500-A	112 (150)	100-D630ED11
20P21AB700	20P41AB700	700	572	200	1321-3R600-A	149 (200)	100-D630ED11
20P21AB875	20P41AB875	875	715	250	1321-3R750-A	186 (250)	100-D860ED11
20P21AB1K0	20P41AB1K0	1050	858	300	1321-3R850-A	224 (300)	100-D860ED11

460V AC Input Drives

Non-Regenerative Drive Cat. No.	Regenerative Drive Cat. No.	DC Amps	AC Line Amps	HP	IP00 (Open Style) Line Reactor Cat No.	Line Reactor kW (HP)	AC Input Contactor Cat. No.
20P21AD4P1	20P41AD4P1	4.1	3.3	2	1321-3R4-A	.55 (.75)	100-C12D10
20P21AD6P0	20P41AD6P0	6	4.9	3	1321-3R8-A	.75 (1)	100-C12D10
20P21AD010	20P41AD010	10	8.2	5	1321-3R18-B	1.5-7.5 (2-10)	100-C12D10
20P21AD014	20P41AD014	14	11.4	7.5	1321-3R18-B	1.5-7.5 (2-10)	100-C12D10
20P21AD019	20P41AD019	19	15.5	10	1321-3R18-B	1.5-7.5 (2-10)	100-C23D10
20P21AD027	20P41AD027	27	22.1	15	1321-3R55-B	11-22 (15-30)	100-C23D10
20P21AD035	20P41AD035	35	28.6	20	1321-3R55-B	11-22 (15-30)	100-C30D10
20P21AD045	20P41AD045	45	36.8	25	1321-3R55-B	11-22 (15-30)	100-C37D10
20P21AD052	20P41AD052	52	42.5	30	1321-3R55-B	11-22 (15-30)	100-C43D10
20P21AD073	20P41AD073	73	59.6	40	1321-3R80-B	30 (40)	100-C60D10
20P21AD086	20P41AD086	86	70.3	50	1321-3R100-B	37-45 (50-60)	100-C85D10
20P21AD100	20P41AD100	100	81.7	60	1321-3R100-B	37-45 (50-60)	100-C85D10
20P21AD129	20P41AD129	129	105.4	75	1321-3R160-B	56-75 (75-100)	100-D110D11
20P21AD167	20P41AD167	167	136.4	100	1321-3R160-B	56-75 (75-100)	100-D140D11
20P21AD207	20P41AD207	207	169.1	125	1321-3RB250-B	93-112 (125-150)	100-D180D11
20P21AD250	20P41AD250	250	204.3	150	1321-3RB250-B	93-112 (125-150)	100-D210ED11
20P21AD330	20P41AD330	330	269.6	200	1321-3RB320-B	149 (200)	100-D300ED11
20P21AD412	20P41AD412	412	336.6	250	1321-3RB400-B	186.4 (250)	100-D420ED11
20P21AD495	20P41AD495	495	404.4	300	1321-3R500-B	223.7 (300)	100-D420ED11
20P21AD667	20P41AD667	667	544.9	400	1321-3R600-B	298.3 (400)	100-D630ED11
20P21AD830	20P41AD830	830	678.1	500	1321-3R750-B	372.8 (500)	100-D860ED11

Non-Regenerative Drive Cat. No.	Regenerative Drive Cat. No.	DC Amps	AC Line Amps	HP	IP00 (Open Style) Line Reactor Cat No.	Line Reactor kW (HP)	AC Input Contactor Cat. No.
20P21AD996	20P41AD996	996	813.7	600	1321-3R850-B	447,4 (600)	100-D860ED11
20P21AD1K1	20P41AD1K1	1162	949.4	700	1321-3R1000-B	552 (700)	100-G860KD22
20P21AD1K3	20P41AD1K3	1328	1085.0	800	(1)	–	100-G860KD22
20P21AD1K4	20P41AD1K4	1494	1220.6	900	(2)	–	100-G1200KD12

(1) No Line Reactor available for this drive rating. Use the recommended Isolation Transformer: 1321-3TH880-BB.

(2) No Line Reactor or Isolation Transformer available for this drive rating - must be sourced locally.

575V AC Input Drives

Non-Regenerative Drive Cat. No.	Regenerative Drive Cat. No.	DC Amps	AC Line Amps	HP	IP00 (Open Style) Line Reactor Cat No.	Line Reactor kW (HP)	AC Input Contactor Cat. No.
20P21AE067	20P41AE067	67.5	55.1	50	1321-3R55-B	37 (50)	100-C60D10
20P21AE101	20P41AE101	101.25	82.7	75	1321-3R100-B	56 (75)	100-C85D10
20P21AE135	20P41AE135	135	110.3	100	1321-3R130-B	75 (100)	100-D110D11
20P21AE270	20P41AE270	270	220.6	200	1321-3RB250-B	149 (200)	100-D250ED11
20P21AE405	20P41AE405	405	330.9	300	1321-3RB320-B	224 (300)	100-D420ED11
20P21AE540	20P41AE540	540	441.2	400	1321-3RB500-B	298 (400)	100-D630ED11
20P21AE675	20P41AE675	675	551.5	500	1321-3R600-B	373 (500)	100-D630ED11
20P21AE810	20P41AE810	810	661.8	600	1321-3R600-B	447 (600)	100-D860ED11
20P21AE1K0	20P41AE1K0	1080	882.4	800	1321-3R750-B	597 (800)	100-G700KD22
20P21AE1K2	20P41AE1K2	1215	992.7	900	1321-3R850-B	671 (900)	100-G860KD22
20P21AE1K3	20P41AE1K3	1350	1103.0	1000	1321-3R1000-B	746 (1000)	100-G1000KD12
20P21AE1K6	20P41AE1K6	1687.5	1378.7	1250	(1)	–	(2)

(1) No Line Reactor or Isolation Transformer available for this drive rating - must be sourced locally.

(2) No AC Input Contactor available for this drive rating - must be sourced locally.

690V AC Input Drives

Non-Regenerative Drive Cat. No.	Regenerative Drive Cat. No.	DC Amps	AC Line Amps	HP	IP00 (Open Style) Line Reactor Cat No.	Line Reactor kW (HP)	AC Input Contactor Cat. No.
20P21AF452	20P41AF452	452	369	400	1321-3RB500-C	–	100-D420ED11
20P21AF565	20P41AF565	565	462	500	1321-3RB600-C	–	100-D630ED11
20P21AF678	20P41AF678	678	554	600	Line Reactors or Isolation Transformers for 690V AC input voltage drives must be sourced locally.	–	100-D630ED11
20P21AF791	20P41AF791	791	646	700		–	100-D860ED11
20P21AF904	20P41AF904	904	739	800		–	100-D860ED11
20P21AF1K0	20P41AF1K0	1017	831	900		–	100-D860ED11
20P21AF1K1	20P41AF1K1	1130	923	1000		–	100-G700KD22
20P21AF1K2	20P41AF1K2	1243	1016	1100		–	100-G860KD22
20P21AF1K4	20P41AF1K4	1412.5	1154	1250		–	100-G1200KD12
20P21AF1K5	20P41AF1K5	1582	1292	1400		–	100-G1200KD12

Dynamic Brake Resistor Kits and DC Output Contactors

See Alternate Dynamic Brake Resistor Kits and DC Output Contactors on page 16 for recommended alternate DC Output Contactors for 575V and 690V AC input drives, respectively.

230V AC Input Drives

Frame	Drive Current Rating Code	DC Amps	AC Line Amps	HP	Dynamic Brake Resistor Kit Cat. No.	Armature Voltage (Volts)	DB Resistor Size (ohms)	DB Resistor Size (Watts)	Brake Amps Required	DC Loop Contactor Cat. No.(3)	DC Contactor Crimp Lugs Cat. No.(4)
A	7P0	7	5.7	1.5	1370-DBL62	240	20	420	12.00	1370-DC56	1370-LG40
	9P0	9	7.4	2	1370-DBL63	240	20	420	12.00	1370-DC56	1370-LG40
	012	12	9.8	3	1370-DBL64	240	15	420	16.00	1370-DC56	1370-LG40
	020	20	16	5	1370-DBL65	240	8.6	420	27.91	1370-DC56	1370-LG40
	029	29	24	7.5	1370-DBL66	240	6	345	40.00	1370-DC56	1370-LG40
	038	38	31	10	1370-DBL67	240	5	330	48.00	1370-DC56	1370-LG40
	055	55	45	15	1370-DBL68	240	3.5	385	68.57	1370-DC56	1370-LG56
	073	73	60	20	1370-DBL69	240	2.6	385	92.31	1370-DC110	1370-LG92
	093	93	76	25	1370-DBL70	240	2	330	120.00	1370-DC110	1370-LG92
	110	110	90	30	1370-DBL71	240	2	330	120.00	1370-DC110	1370-LG110
B	146	146	119	40	1370-DBL72	240	0.7	280	342.86	1370-DC180	1370-LG160
	180	180	147	50	1370-DBL73	240	0.5	365	480.00	1370-DC180	1370-LG180
	218	218	178	60	1370-DBL74	240	0.5	365	480.00	1370-DC280	1370-LG228
	265	265	217	75	1370-DBL75	240	2	330	120.00	1370-DC280	1370-LG268
	360	360	294	100	1370-DBL76	240	1.4	290	171.43	(1)	(5)
	434	434	355	125	(1)	240	0.5	1458	651	(1)	(5)
C	521	521	426	150	(1)	240	0.322	6221	781	(1)	(5)
	700	700	572	200	(2)	240	–	–	–	(1)	(5)
D	875	875	715	250	(2)	240	–	–	–	(1)	(5)
	1K0	1050	858	300	(2)	240	–	–	–	(1)	(5)

(1) See Alternate Dynamic Brake Resistor Kits and DC Output Contactors Amp on page 16.
(2) No Dynamic Brake Resistor kit available for this drive rating - must be sourced locally.
(3) Coil voltage = 115V AC, 50/60Hz.
(4) See DC Contactor Crimp Lug Kit Specifications Amp on page 15 for more information.
(5) Wire and Lug size dependant on enclosure dimensions and local codes.

460V AC Input Drives

Frame	Drive Current Rating Code	DC Amps	AC Line Amps	HP	Dynamic Brake Resistor Kit Cat. No.	Armature Voltage (Volts)	DB Resistor Size (ohms)	DB Resistor Size (Watts)	Brake Amps Required	DC Loop Contactor Cat. No.(3)	DC Contactor Crimp Lugs Cat. No.(4)
A	4P1	4.1	3.3	2	1370-DBH63	500	81	255	6.17	1370-DC56	1370-LG40
	6P0	6	4.9	3	1370-DBH64	500	62	245	8.06	1370-DC56	1370-LG40
	010	10	8.2	5	1370-DBH65	500	45	245	11.11	1370-DC56	1370-LG40
	014	14	11.4	7.5	1370-DBH66	500	27	350	18.52	1370-DC56	1370-LG40
	019	19	15.5	10	1370-DBH67	500	20	420	25.00	1370-DC56	1370-LG40
	027	27	22.1	15	1370-DBH68	500	12	405	41.67	1370-DC56	1370-LG40
	035	35	28.6	20	1370-DBH69	500	5	330	100.00	1370-DC56	1370-LG40
	045	45	36.8	25	1370-DBH70	500	4.5	330	111.11	1370-DC56	1370-LG52
	052	52	42.5	30	1370-DBH71	500	3.5	385	142.86	1370-DC56	1370-LG52
	073	73	59.6	40	1370-DBH72	500	2.6	345	192.31	1370-DC110	1370-LG92
	086	86	70.3	50	1370-DBH73	500	2	345	250.00	1370-DC110	1370-LG92
	100	100	81.7	60	1370-DBH74	500	2	345	250.00	1370-DC110	1370-LG110
	129	129	105.4	75	1370-DBH75	500	1	270	500.00	1370-DC180	1370-LG140

Frame	Drive Current Rating Code	DC Amps	AC Line Amps	HP	Dynamic Brake Resistor Kit Cat. No.	Armature Voltage (Volts)	DB Resistor Size (ohms)	DB Resistor Size (Watts)	Brake Amps Required	DC Loop Contactor Cat. No.(3)	DC Contactor Crimp Lugs Cat. No.(4)
B	167	167	136.4	100	1370-DBH76	500	0.7	280	714.29	1370-DC180	1370-LG180
	207	207	169.1	125	1370-DBH77	500	0.7	280	714.29	1370-DC280	1370-LG228
	250	250	204.3	150	1370-DBH78	500	0.5	365	1000.00	1370-DC280	1370-LG268
	330	330	269.6	200	1370-DBH79	500	0.7	280	714.29	(1)	(5)
	412	412	336.6	250	(1)	500	0.808	7292	–	(1)	(5)
C	495	495	404.4	300	(1)	500	0.595	6069	–	(1)	(5)
	667	667	544.9	400	(1)	500	0.542	6439	–	(1)	(5)
D	800	830	678.1	500	(2)	500	0.463	6338	–	(1)	(5)
	960	996	813.7	600	(2)	500	0.322	6221	–	(1)	(5)
	1K1	1162	949.4	700	(2)	500	0.322	6221	–	(1)	(5)
	1K3	1328	1085.0	800	(2)	500	0.255	5718	–	(1)	(5)
	1K4	1494	1220.6	900	(2)	500	0.255	5718	–	(1)	(5)

(1) See Alternate Dynamic Brake Resistor Kits and DC Output Contactors Amp on page 16.
(2) No Dynamic Brake Resistor kit available for this drive rating - must be sourced locally.
(3) Coil voltage = 115V AC, 50/60Hz.
(4) See DC Contactor Crimp Lug Kit Specifications Amp on page 15for more information.
(5) Wire and Lug size dependant on enclosure dimensions and local codes.

DC Contactor Crimp Lug Kit Specifications

Use the information provided in the table below to assist you in ordering the correct Lug kit for your application.

Rated Motor Armature Current (1) *A DC*	DC Contactor Rating *A DC*	Armature Conductor Size (2) *AWG*	DB Conductor Size (3) *AWG*	Armature Conductor Crimp Lug Hole Size	DB Conductor Crimp Lug Hole Size	Lug Kit Catalog Number
4.1…35	56	8	8	#10	#10	1370-LG40
45…52	56	6	8	#10	#10	1370-LG52
55	56	4	8	#10	#10	1370-LG56
60…86	110	2	6	0.25 in.	0.25 in.	1370-LG92
100…110	110	1/0	4	0.25 in.	0.25 in.	1370-LG110
129	180	2/0	2	0.3125 in.	0.3125 in.	1370-LG140
146	180	3/0	2	0.3125 in.	0.3125 in.	1370-LG160
147…167	180	4/0	2	0.3125 in.	0.3125 in.	1370-LG180
207…218	280	300MCM	1/0	0.5 in.	0.375 in.	1370-LG228
250…265	280	400MCM	2/0	0.5 in.	0.375 in.	1370-LG268
266…280	280	500MCM	3/0	0.5 in.	0.375 in.	1370-LG280

(1) The Rated Motor Armature Current is taken directly from the motor nameplate or motor data. The current listed in this column is the maximum current allowed for the Armature Conductor Size (column 3) and the DC Contactor Rating (column 2).
(2) The armature conductors are sized by multiplying the Rated Motor Armature Current by 1.25 as provided for in NEC 420-22 (1987). The DC lug ratings are determined from NEC Table 310-16 (1987) for copper conductors, insulation temperature rated at 75° C (167° F) at an ambient temperature of 30° C (86° F). If conditions are other than shown in NEC Table 310-16, then refer to application codes.
(3) The dynamic braking (DB) conductors are sized as in footnote 2 above, but at half ampacity due to the short time duration of current flow in these conductors, and has been sized to satisfy NEMA Standard ICS 3-302.62 - Dynamic Braking. If the load inertia is larger than that of the motor, calculations must be made to determine correct conductor sizing and DB resistor wattage per NEMA Standard ICS 3-302.62.

Alternate Dynamic Brake Resistor Kits and DC Output Contactors

The following alternate dynamic brake resistor kits and/or DC output contactors may be used with the corresponding PowerFlex DC drives but must be sourced separately from the drive.

230V AC Input Drives

Frame	Drive Current Rating Code	DC Amps	AC Line Amps	HP	Dynamic Brake Resistor Kit Cat. No.	Armature Voltage (Volts)	DB Resistor Size (ohms)	DB Resistor Size (Watts)	Brake Amps Required	DC Loop Contactor Cat. No.(2)		DC Contactor Crimp Lugs Cat. No.(3)
										Drive w/No Dynamic Brake	Drive w Dynamic Brake	
B	360	360	294	100	1370-DBL76	240	1.4	290	171.43	ABB_EHDB360C2P-1L2S	ABB_EHDB360C-1L22SS	(4)
	434	434	355	125	CUTLER-HAMMER_G3AP50 (Qty 4 - two in series, two in parallel)	240	0.5	1458	651	ABB_EHDB520C2P-1L2S	ABB_EHDB520C-1L22SS	
C	521	521	426	150	HUBBELL_Y139W322GB	240	0.322	6221	781			
	700	700	572	200	(1)	240	–	–	–	ABB_EHDB800C2P-1L2S	ABB_EHDB800C-1L22SS	
D	875	875	715	250		240	–	–	–	ABB_EHDB960C2P-1L2S	ABB_EHDB960C-1L22SS	
	1K0	1050	858	300		240	–	–	–	SIEMENS-MFG_14-193-101-58-2 (Qty 2)	SIEMENS-MFG_14-193-101-58-2 (Qty 1)	

(1) No Dynamic Brake Resistor kit available for this drive rating - must be sourced locally.
(2) Coil voltage = 115V AC, 50/60Hz.
(3) See DC Contactor Crimp Lug Kit Specifications Amp on page 15 for more information.
(4) Wire and Lug size dependant on enclosure dimensions and local codes.

460V AC Input Drives

Frame	Drive Current Rating Code	DC Amps	AC Line Amps	HP	Dynamic Brake Resistor Kit Cat. No.	Armature Voltage (Volts)	DB Resistor Size (ohms)	DB Resistor Size (Watts)	Brake Amps Required	DC Loop Contactor Cat. No.(2)		DC Contactor Crimp Lugs Cat. No.(3)
										Drive w/No Dynamic Brake	Drive w Dynamic Brake	
B	330	330	269.6	200	1370-DBH79	500	0.7	280	714.29	ABB_EHDB360C2P-1L2S	ABB_EHDB360C-1L22SS	(4)
	412	412	336.6	250	HUBBELL_Y95W808GB	500	0.808	7292	–	ABB_EHDB520C2P-1L2S	ABB_EHDB520C-1L22SS	
C	495	495	404.4	300	HUBBELL_Y101W595GB	500	0.595	6069	–	ABB_EHDB520C2P-1L2S	ABB_EHDB520C-1L22SS	
	667	667	544.9	400	HUBBELL_Y109W542GB	500	0.542	6439	–	ABB_EHDB800C2P-1L2S	ABB_EHDB800C-1L22SS	
D	800	830	678.1	500	(1)	500	0.463	6338	–	ABB_EHDB960C2P-1L2S	ABB_EHDB960C-1L22SS	
	960	996	813.7	600		500	0.322	6221	–	SIEMENS-MFG_14-193-101-58-2 (Qty 2)	SIEMENS-MFG_14-193-101-58-2 (Qty 1)	
	1K1	1162	949.4	700		500	0.322	6221	–	SIEMENS-MFG_14-193-101-58-2 (Qty 2)	SIEMENS-MFG_14-193-101-58-2 (Qty 1)	
	1K3	1328	1085.0	800		500	0.255	5718	–	CUTLER-HAMMER_6702ED636-2 (Qty 2)	CUTLER-HAMMER_6702ED636-2 (Qty 1)	
	1K4	1494	1220.6	900		500	0.255	5718	–	CUTLER-HAMMER_6702ED636-2 (Qty 2)	CUTLER-HAMMER_6702ED636-2 (Qty 1)	

(1) No Dynamic Brake Resistor kit available for this drive rating - must be sourced locally.
(2) Coil voltage = 115V AC, 50/60Hz.
(3) See DC Contactor Crimp Lug Kit Specifications Amp on page 15 for more information.
(4) Wire and Lug size dependant on enclosure dimensions and local codes.

575V AC Input Drives

Frame	Drive Current Rating Code	DC Amps	AC Line Amps	Hp	Dynamic Brake Resistor Kit Cat. No.	Armature Voltage (Volts)	DB Resistor Size (ohms)	DB Resistor Size (Watts)	Brake Amps Required	DC Loop Contactor Cat. No.(2)		DC Contactor Crimp Lugs Cat. No.(3)
										Drive w/No Dynamic Brake	Drive w Dynamic Brake	
B	067	67.5	55.1	50	(1)	600	5.93	–	–	ABB_EHDB220C2P-1L2S	ABB_EHDB220C-1L22SS	(4)
	101	101	83	75		600	3.95	–	–	ABB_EHDB220C2P-1L2S	ABB_EHDB220C-1L22SS	
	135	135	110	100		600	2.96	–	–	ABB_EHDB220C2P-1L2S	ABB_EHDB220C-1L22SS	
	270	270	221	200		600	1.48	–	–	ABB_EHDB360C2P-1L2S	ABB_EHDB360C-1L22SS	
	405	405	331	300		600	0.988	–	–	ABB_EHDB520C2P-1L2S	ABB_EHDB520C-1L22SS	
C	540	540	441	400		600	0.741	–	–	ABB_EHDB650C2P-1L2S	ABB_EHDB650C-1L22SS	
	675	675	551	500		600	0.593	–	–	ABB_EHDB800C2P-1L2S	ABB_EHDB800C-1L22SS	
D	810	810	662	600		600	0.494	–	–	ABB_EHDB960C2P-1L2S	ABB_EHDB960C-1L22SS	
	1K0	1080	882	800		600	0.370	–	–	SIEMENS-MFG_14-193-101-58-2 (Qty 2)	SIEMENS-MFG_14-193-101-58-2 (Qty 1)	
	1K2	1215	993	900		600	0.329	–	–	SIEMENS-MFG_14-193-101-58-2 (Qty 2)	SIEMENS-MFG_14-193-101-58-2 (Qty 1)	
	1K3	1350	1103	1000		600	0.296	–	–	CUTLER-HAMMER_6702ED636-2 (Qty 2)	CUTLER-HAMMER_6702ED636-2 (Qty 1)	
	1K6	1688	1379	1250		600	0.237	–	–	CUTLER-HAMMER_6702ED636-2 (Qty 2)	CUTLER-HAMMER_6702ED636-2 (Qty 1)	

(1) No Dynamic Brake Resistor kit available for this drive rating - must be sourced locally.

(2) Coil voltage = 115V AC, 50/60Hz.

(3) See DC Contactor Crimp Lug Kit Specifications Amp on page 15 for more information.

(4) Wire and Lug size dependant on enclosure dimensions and local codes.

690V AC Input Drives

Frame	Drive Current Rating Code	DC Amps	AC Line Amps	Hp	Dynamic Brake Resistor Kit Cat. No.	Armature Voltage (Volts)	DB Resistor Size (ohms)	DB Resistor Size (Watts)	Brake Amps Required	DC Loop Contactor Cat. No.(2)		DC Contactor Crimp Lugs Cat. No.(3)
										Drive w/No Dynamic Brake	Drive w Dynamic Brake	
C	452	452	369	400	(1)	700	1.03	–	–	SIEMENS-MFG_14-193-101-58-2 (Qty 2)	SIEMENS-MFG_14-193-101-58-2 (Qty 1)	(4)
	565	565	462	500		700	0.826	–	–	SIEMENS-MFG_14-193-101-58-2 (Qty 2)	SIEMENS-MFG_14-193-101-58-2 (Qty 1)	
D	678	678	554	600		700	0.688	–	–	SIEMENS-MFG_14-193-101-58-2 (Qty 2)	SIEMENS-MFG_14-193-101-58-2 (Qty 1)	
	791	791	646	700		700	0.590	–	–	SIEMENS-MFG_14-193-101-58-2 (Qty 2)	SIEMENS-MFG_14-193-101-58-2 (Qty 1)	
	904	904	739	800		700	0.516	–	–	SIEMENS-MFG_14-193-101-58-2 (Qty 2)	SIEMENS-MFG_14-193-101-58-2 (Qty 1)	
	1K0	1017	831	900		700	0.459	–	–	SIEMENS-MFG_14-193-101-58-2 (Qty 2)	SIEMENS-MFG_14-193-101-58-2 (Qty 1)	
	1K1	1130	923	1000		700	0.413	–	–	SIEMENS-MFG_14-193-101-58-2 (Qty 2)	SIEMENS-MFG_14-193-101-58-2 (Qty 1)	
	1K2	1243	1016	1100		700	0.375	–	–	SIEMENS-MFG_14-193-101-58-2 (Qty 2)	SIEMENS-MFG_14-193-101-58-2 (Qty 1)	
	1K4	1413	1154	1250		700	0.330	–	–	CUTLER-HAMMER_6702ED636-2 (Qty 2)	CUTLER-HAMMER_6702ED636-2 (Qty 1)	
	1K5	1582	1292	1400		700	0.295	–	–	CUTLER-HAMMER_6702ED636-2 (Qty 2)	CUTLER-HAMMER_6702ED636-2 (Qty 1)	

(1) No Dynamic Brake Resistor kit available for this drive rating - must be sourced locally.

(2) Coil voltage = 115V AC, 50/60Hz.

(3) See DC Contactor Crimp Lug Kit Specifications Amp on page 15 for more information.

(4) Wire and Lug size dependant on enclosure dimensions and local codes.

Frame D Terminal Adapter Kits

The following frame D drives require the listed terminal adapter kits in order to meet UL installation requirements.

Voltage Class	Drive Current Rating Code	U, V, W Terminal Adapter Kit Number	C, D Terminal Adapter Kit Number
230	1K0	SK-20P-S726171	–
460	1K1		–
	1K3		–
	1K4		–
575	1K0		–
	1K2		–
	1K3		–
	1K6		SK-20P-S726173
690	1K0		–
	1K1		–
	1K2		–
	1K4		–
	1K5		–

Installation Considerations

The PowerFlex Digital DC drive has the following built in protective features to help simplify installation:

- Ground fault protection during start up and running ensures reliable operation
- Electronic motor overload protection increases motor life

There are many other factors that must be considered for optimal performance in any given application. The block diagram below highlights the primary installation considerations.

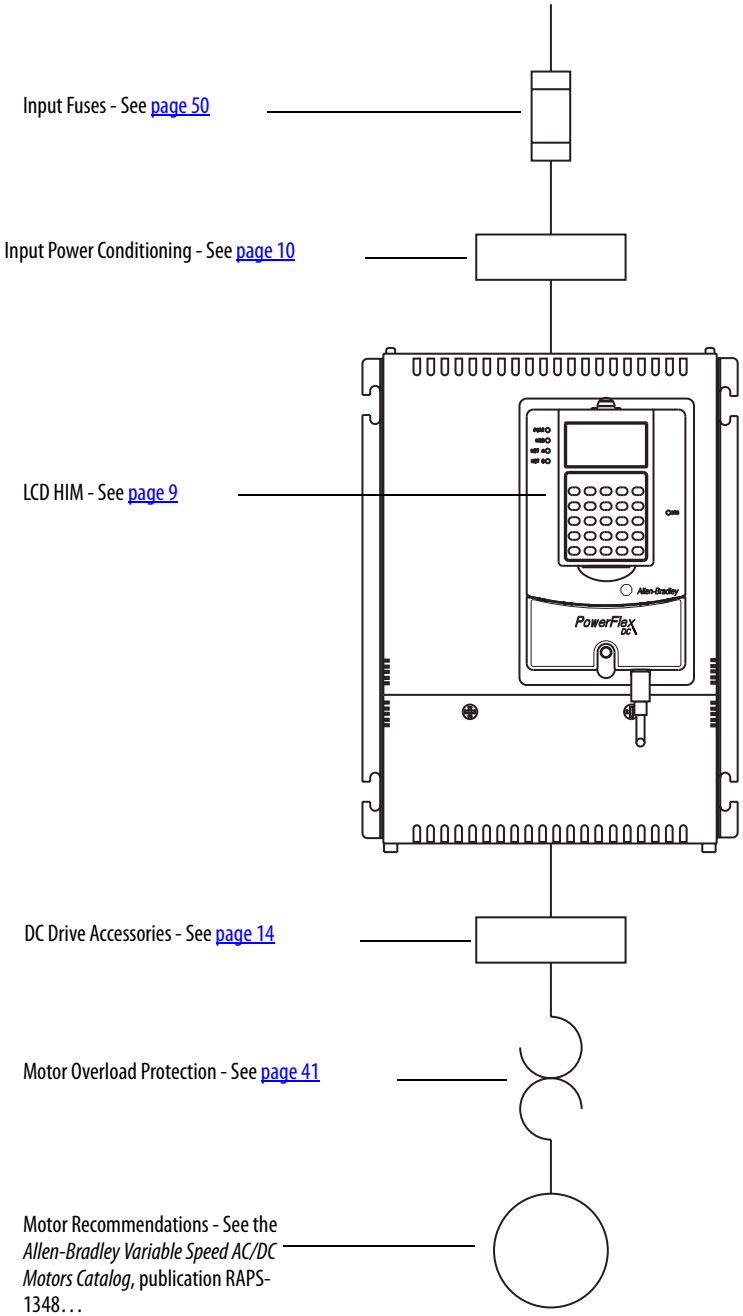

Power Wiring

AC Input Voltages

PowerFlex DC drives are rated for the following AC input voltages @ 50/60 Hz ±5%:

Mains Circuit (Terminals U, V, W)

- 230V ±10%, 3Ph
- 400V ±10%, 3Ph
- 440V ±10%, 3Ph
- 460V ±10%, 3Ph
- 480V ±10%, 3Ph
- 575V ±10%, 3Ph
- 690V ±10%, 3Ph

Field Circuit (Terminals U1, V1)

- 230V ±10%, 1Ph
- 400V ±10%, 1Ph
- 460V ±10%, 1Ph

Control Circuit (Terminals U2, V2)

- 115V ±15% or 230V ±15%, 1Ph

Note: For frame B and C drives only, a jumper must be placed between terminals SA-SB on the Switching Power Supply circuit board for the control circuits to work with 115V AC input. Refer to Frame B drives SA-SB Terminal Block Location on page 36 and Frame C Drives SA-SB Terminal Block Location on page 37 for terminal block locations.

DC Output Voltages

The output voltages below take into account an AC input undervoltage within the stated tolerance limits and a voltage drop of 4% due to an AC input line reactor. It is the same as the rated armature voltage suggested for the connected motor.

Armature Circuit

AC Input Voltage	DC Output Armature Voltage (Terminals C & D)	
(Terminals U, V, W)	Two Quadrant Drive	Four Quadrant Drive
230V ±10 %, 3Ph	260V	240V
400V ±10 %, 3Ph	470V	420V
440V ±10 %, 3Ph	530V	460V
460V ±10 %, 3Ph	560V	480V
480V ±10 %, 3Ph	580V	500V
575V ±10 %, 3Ph	680V	600V
690V ±10 %, 3Ph	810V	720V

Field Circuit

AC Input Voltage	DC Output Field Voltage(1) (Terminals C1 & D1)	
(Terminals U1 & V1)	Fixed Field	Adjustable Field
230V ±10 %, 1Ph	200V	200V
400V ±10 %, 1Ph	310V	310V
460V ±10%, 1Ph	360V	360V

(1) The max field voltage is equal to 0.85 x AC input line voltage

Typical Power Wiring Diagrams

The following diagram represents recommended power wiring configurations:

Power Wiring with AC Input Contactor

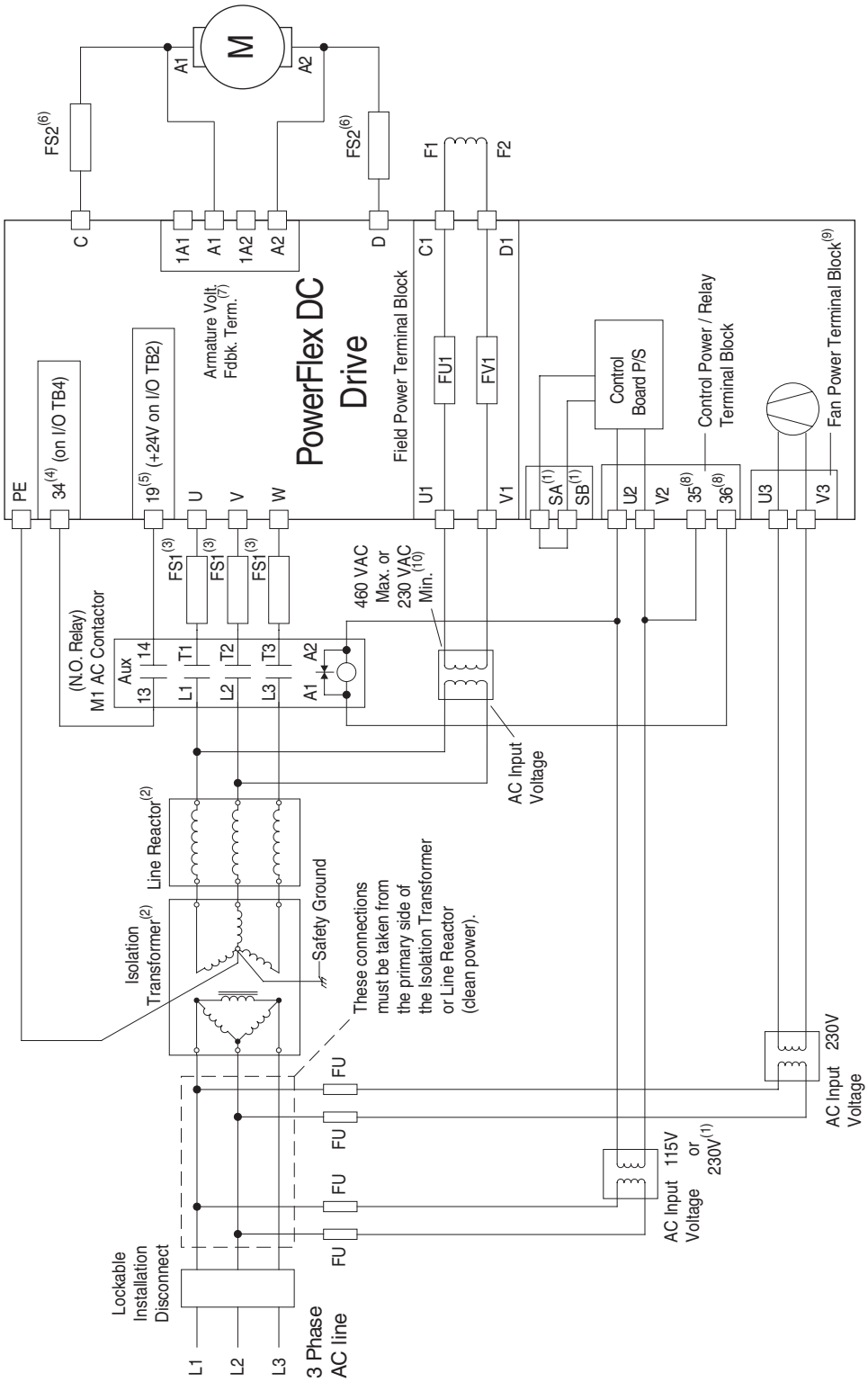

(1) For frame B and C drives only, a jumper is required between terminals SA and SB for 115V AC control input power. See Control Circuit Input Power on page 33 for more information.
(2) An Isolation Transformer and/or 3...5% impedance Line Reactor is required. If the Isolation Transformer provides the required 3...5% impedance, a Line Reactor is not required. See AC Input Line Reactors and Contactors on page 12 and Isolation Transformers on page 10 for recommendations.
(3) AC input fuses for the armature converter are customer supplied for frame A and B drives and are internally mounted on frame C and D drives. See Circuit Protection on page 50 for fuse recommendations.
(4) Par 140 [Digital In8 Sel] set to 31 "Contactor"
(5) If using the +24V internal power supply, terminal 18 (24V common) must be jumpered to terminal 35 (digital input common).
(6) Customer supplied armature output fuses are required on four quadrant and are recommended on two quadrant Frame A and B drives. See Circuit Protection on page 50 for fuse recommendations.
(7) Optional armature voltage feedback sensing not required with AC contactor.
(8) Par 1391 [ContactorControl] = 1 "AC Cntctr" and Par 1392 [Relay Out 1 Sel] = 25 "Contactor". **Important:** Terminal 35 and 36 are on the Control Power / Relay Terminal block, NOT the I/O terminal blocks. See Relay Outputs on page 41 for locations.
(9) Frame C & D drives only require an external power supply for the heatsink cooling fan. See Frame C Heatsink Cooling Fans Power Supply Terminals on page 38 and Frame D Heatsink Cooling Fan Power Supply Terminals on page 39 for more information.
(10) See Field Converter Connections on page 30.

Power Wiring with DC Output Contactor

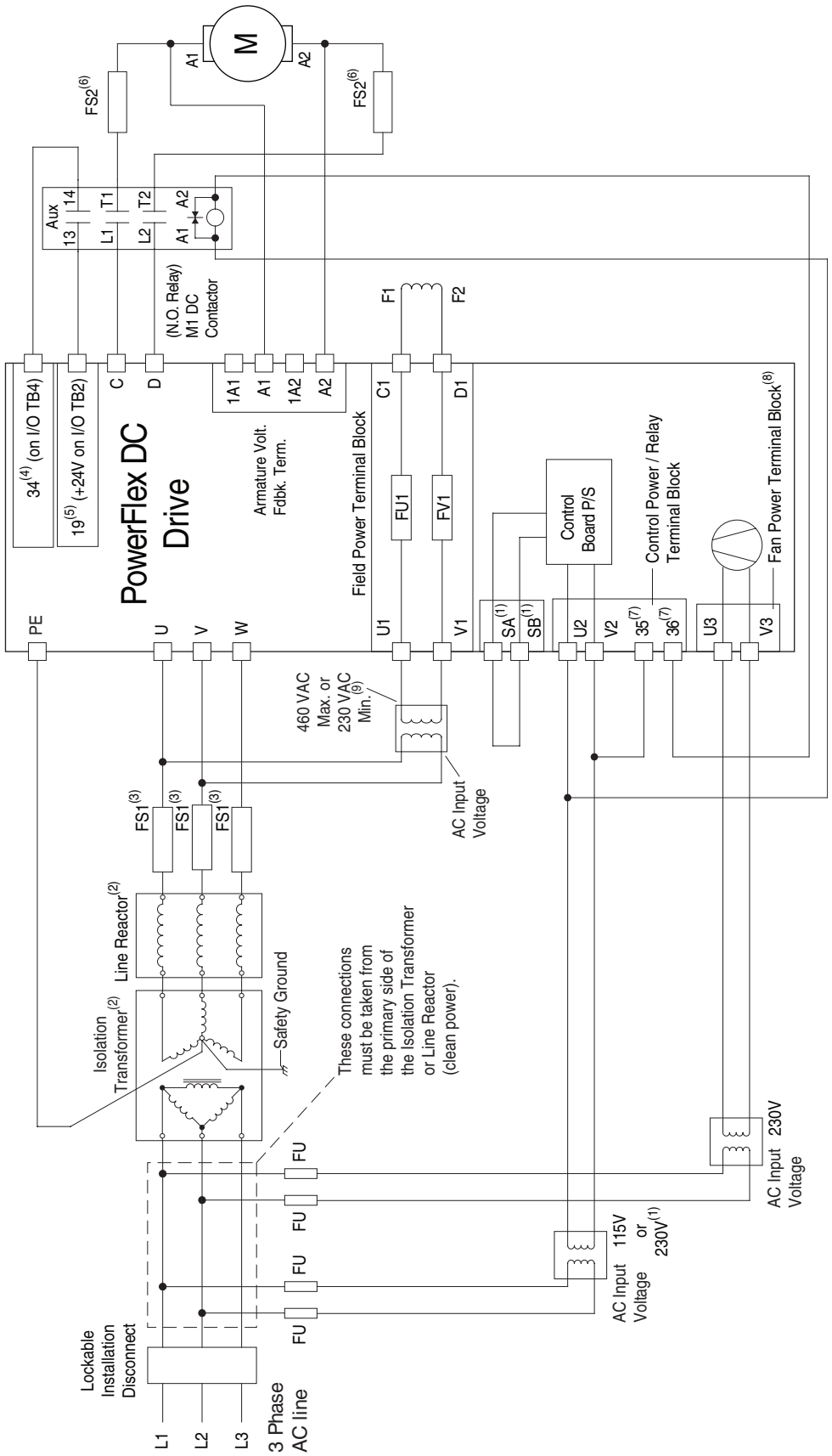

(1) For frame B and C drives only, a jumper is required between terminals SA and SB for 115V AC control input power. See Control Circuit Input Power on page 33 for more information.
(2) An Isolation Transformer and/or 3…5% impedance Line Reactor is required. If the Isolation Transformer provides the required 3…5% impedance, a Line Reactor is not required. See AC Input Line Reactors and Contactors on page 12 and Isolation Transformers on page 10 for recommendations.
(3) AC input fuses for the armature converter are customer supplied for frame A and B drives and are internally mounted on frame C and D drives. See Circuit Protection on page 50 for fuse recommendations.
(4) Par 140 [Digital In8 Sel] set to 31 "Contactor"
(5) If using the +24V internal power supply, terminal 18 (24V common) must be jumpered to terminal 35 (digital input common).
(6) Customer supplied armature output fuses are required on four quadrant and are recommended on two quadrant Frame A and B drives. See Circuit Protection on page 50 for fuse recommendations.
(7) Par 1391 [ContactorControl] = 3 "DC Cntctr" and Par 1392 [Relay Out 1 Sel] = 25 "Contactor". **Important:** Terminal 35 and 36 are on the Control Power / Relay Terminal block, NOT the I/O terminal blocks. See Relay Outputs on page 41 for locations.
(8) Frame C & D drives only require an external power supply for the heatsink cooling fan. See Frame C Heatsink Cooling Fans Power Supply Terminals on page 38 and Frame D Heatsink Cooling Fan Power Supply Terminals on page 39 for more information.
(9) See Field Converter Connections on page 30.

Power Wiring with DC Output/Dynamic Braking Contactor and a Dynamic Brake

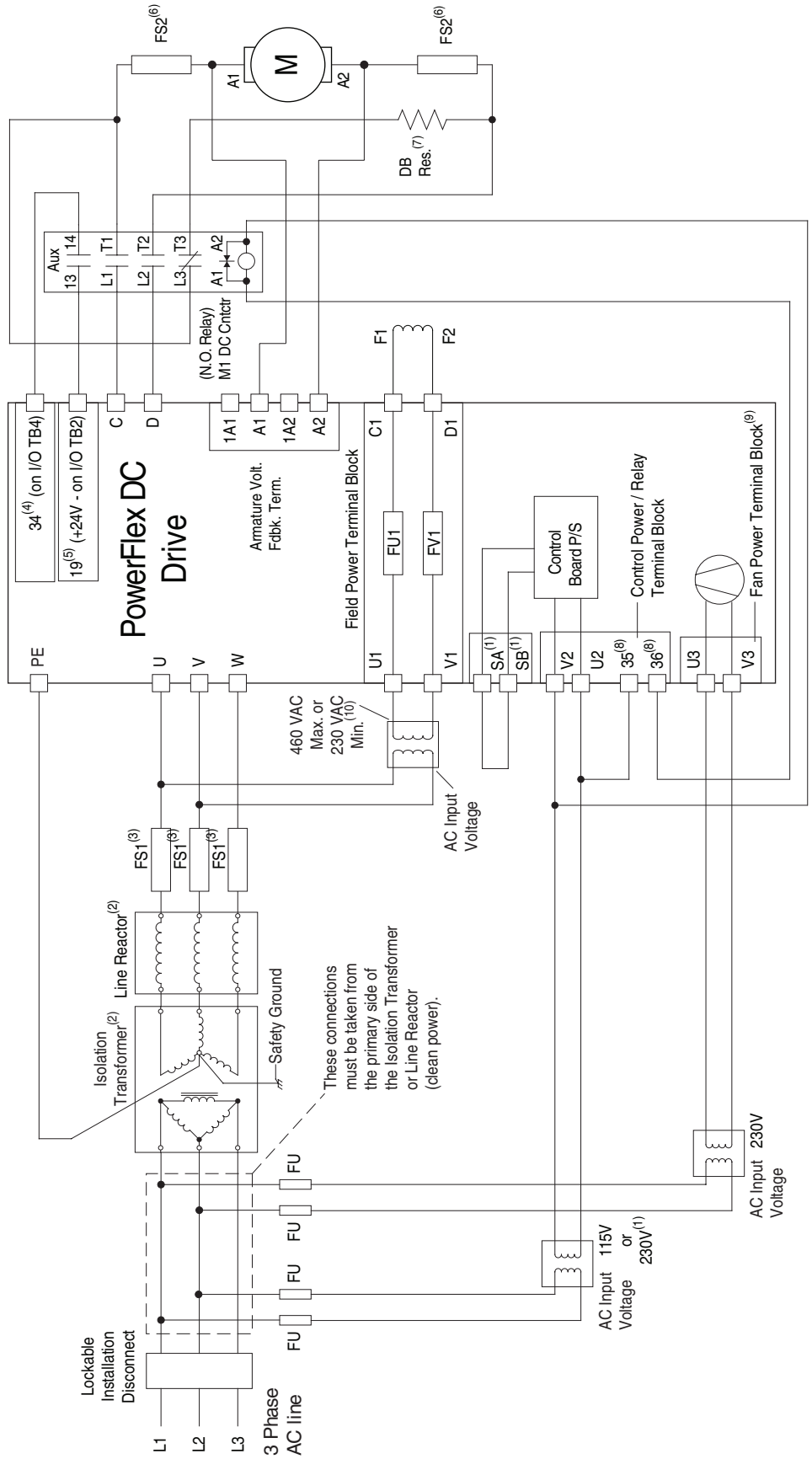

(1) For frame B and C drives only, a jumper is required between terminals SA and SB for 115V AC control input power. See Control Circuit Input Power on page 33 for more information.

(2) An Isolation Transformer and/or 3…5% impedance Line Reactor is required. If the Isolation Transformer provides the required 3…5% impedance, a Line Reactor is not required. See AC Input Line Reactors and Contactors on page 12 and Isolation Transformers on page 10 for recommendations.

(3) AC input fuses for the armature converter are customer supplied for frame A and B drives and are internally mounted on frame C and D drives. See Circuit Protection on page 50 for fuse recommendations.

(4) Par 140 [Digital In8 Sel] set to 31 "Contactor"

(5) If using the +24V internal power supply, terminal 18 (24V common) must be jumpered to terminal 35 (digital input common).

(6) Customer supplied armature output fuses are required on four quadrant and are recommended on two quadrant Frame A and B drives. See Circuit Protection on page 50 for fuse recommendations.

(7) The "Enable" input must be removed in order to perform a dynamic braking stop.

(8) Par 1391 [ContactorControl] = 3 "DC Cntctr" and Par 1392 [Relay Out 1 Sel] = 24 "ContactorDB". **Important:** Terminal 35 and 36 are on the Control Power / Relay Terminal block, NOT the I/O terminal blocks. See Relay Outputs on page 41 for locations.

(9) Frame C & D drives only require an external power supply for the heatsink cooling fan. See Frame C Heatsink Cooling Fans Power Supply Terminals on page 38 and Frame D Heatsink Cooling Fan Power Supply Terminals on page 39 for more information.

(10) See Field Converter Connections on page 30.

Armature Power Terminal Connections

Terminals	Description
U, V, W	Three phase AC input to the armature converter
C, D	DC output to the motor armature
PE	Safety ground

Frame A Armature Terminal Block Locations

Bottom View

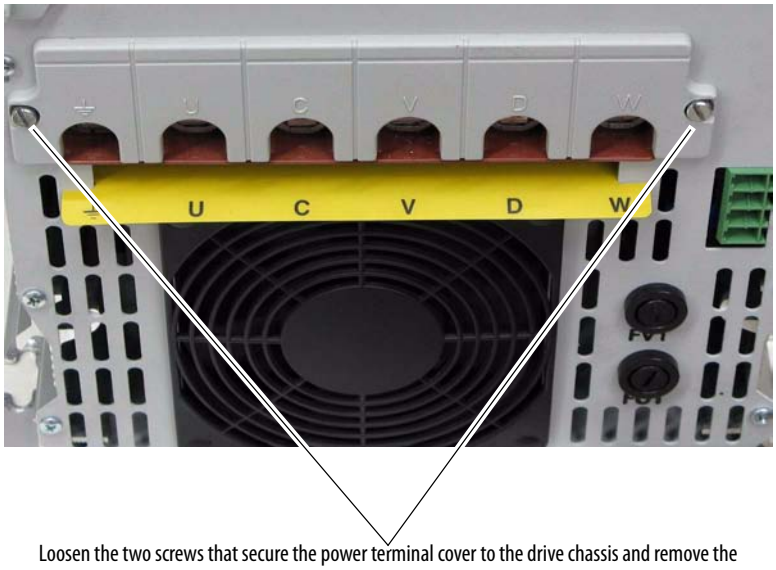

Loosen the two screws that secure the power terminal cover to the drive chassis and remove the terminal cover in order to connect the armature power wiring.

Front View

Note: Front view of drive shown with bottom protective and power terminal covers removed.

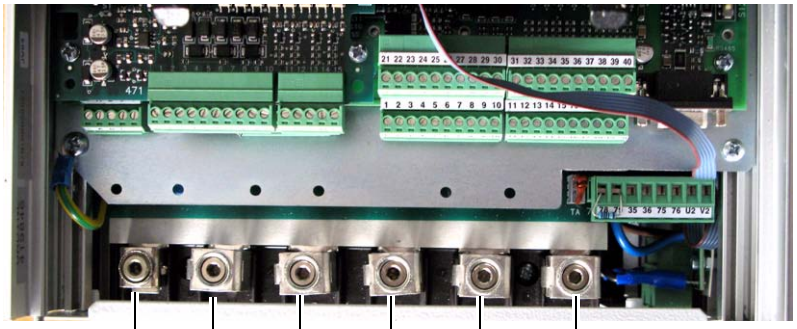

ATTENTION: Do not operate the drive with the power terminal cover removed. Operating the drive with the power terminal cover removed may result in a hazardous condition that could cause personal injury and/or equipment damage.

Frame B Armature Terminal Block Locations

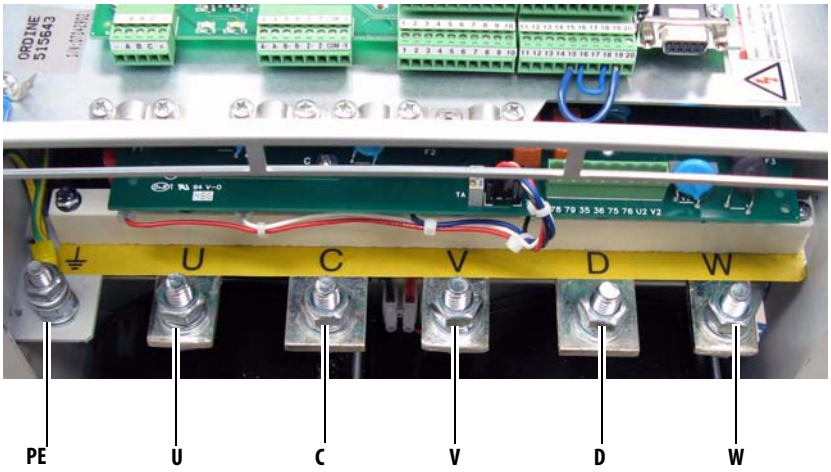

Frame C Armature Terminal Block Locations

Front View

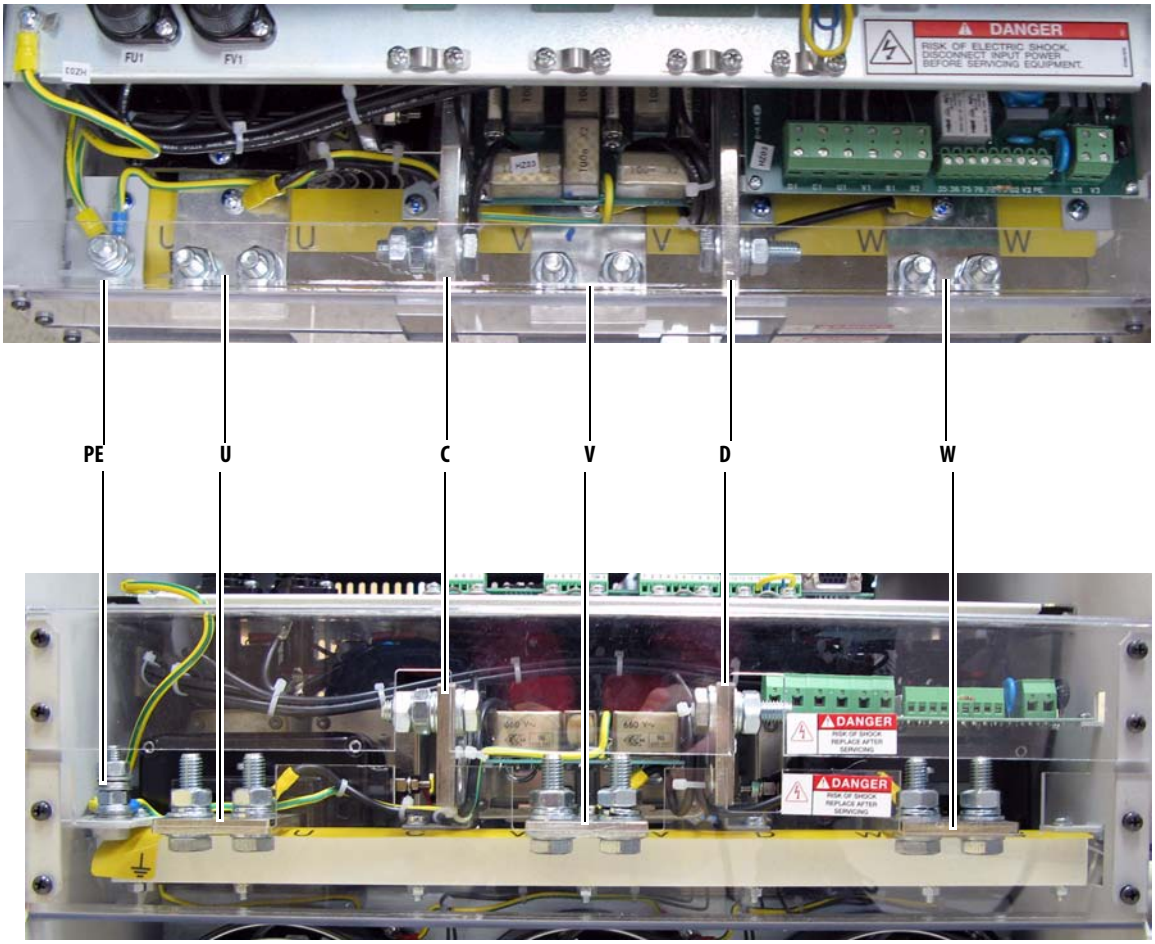

Bottom View

Frame D Armature Terminal Block Locations

Important: Certain frame D drives require the use of a terminal adapter kit(s) for terminals U, V, W, C and D.
Refer to Frame D Terminal Adapter Kits on page 18 for details.

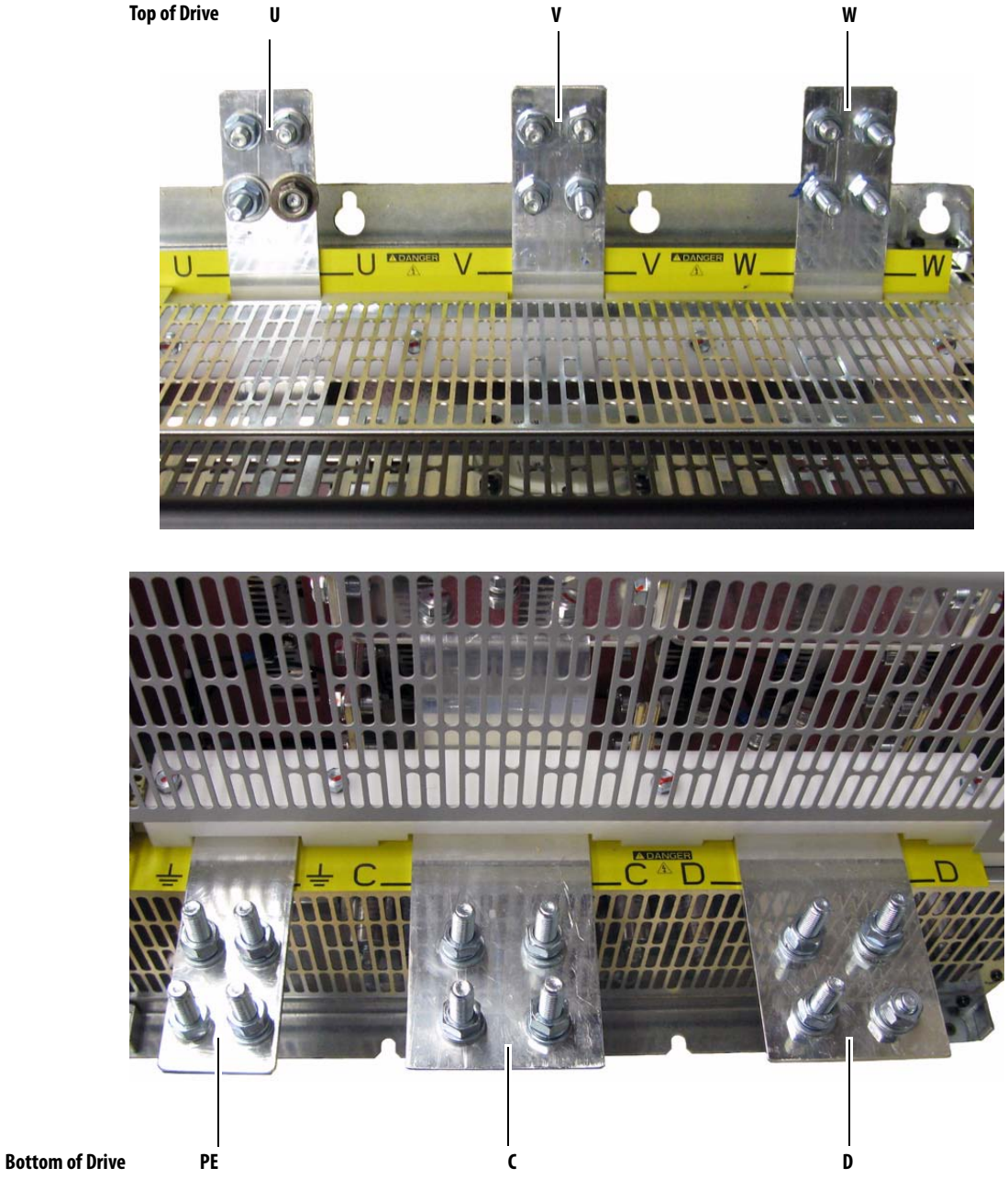

Armature Power Terminal and Ground (PE) Wire Sizes

Frame	Drive Current Rating Code[1]				Terminals	Wire Size and Type	Terminal Bolt Size (mm)	Tightening Torque N•m (lb•in)
	230V	460V	575	690				
A	7P0…055	4P1…052	–	–	U, V, W, C, D, PE	See "Cable and Wiring Recommendations" in the PowerFlex Digital DC Drive User Manual, publication 20P-UM001.	5	6 (53)
	073…110	073…129	–	–			Terminal Block	12 (106)
B	All	All	–	–	U, V, W, C, D		10	25 (221)
					PE		8	15 (132.75)
C	All	All	–	–	U, V, W, C, D		10	25 (221)
					PE		8	15 (132.75)
D	All	All	All	All	U, V, W, C, D, PE		12	45 (398.2)

(1) See Catalog Number Explanation on page 5, positions 8, 9 and 10 for corresponding drive HP rating, armature amp rating and field amp rating.

IMPORTANT Certain frame D drives require the use of a terminal adapter kit(s) for terminals U, V, W, C, and D. Refer to Frame D Terminal Adapter Kits on page 18 for details.

Armature Voltage Feedback Connections

When a DC output contactor or inverting fault breaker/fuse is used with the drive, and a speed feedback device (tachometer or encoder) is not used, the Armature Voltage Feedback terminals can be used to monitor the armature voltage at the motor regardless of the state of the contactor or inverting fault device. When this terminal block is not connected to the motor armature terminals, the terminals must be jumpered (as described in the table below) and the armature voltage feedback is monitored internally within the drive. In this case, when a DC contactor is used with the drive, a speed feedback device is not used, and the contactor opens, the drive will no longer receive the armature voltage feedback signal.

IMPORTANT By default, these terminals are jumpered - 1A1 to A1 and 1A2 to A2. If these terminals are not wired to the motor terminals, the jumpers must be installed.

Note that this terminal block is not present on drives shipped from the factory prior to those with v3.001 firmware installed. However, new Pulse Transformer boards shipped as replacement parts from the factory will contain this terminal block and can be used with any version of firmware.

Terminal	Description
1A1	Jumpered to A1 when internal armature voltage feedback is used. Not used when A1 is connected to motor terminal A1.
A1	Voltage feedback from motor terminal A1.
1A2	Jumpered to A2 when internal armature voltage feedback is used. Not used when A2 is connected to motor terminal A2.
A2	Voltage feedback from motor terminal A2.

Armature Voltage Feedback Circuit Wire Sizes and Terminal Specifications

Frame	Terminals	Wire Size and Type[1]	Tightening Torque N•m (lb•in)
A, B & C	1A1, A1, 1A2, A2	24…10 AWG/kcmils	0.5…0.6 (4.4…5.3)
D		22…8 AWG/kcmils	0.8…1.6 (7.1…14.2)

(1) Wire with an insulation rating of 600V or greater is recommended. See "Cable and Wiring Recommendations" in the PowerFlex Digital DC Drive User Manual, publication 20P-UM001, for cable spacing information.

Frame A Armature Voltage Feedback Circuit Terminal Block Location

Bottom of View of Drives

Drive with no fan

Drive with fan

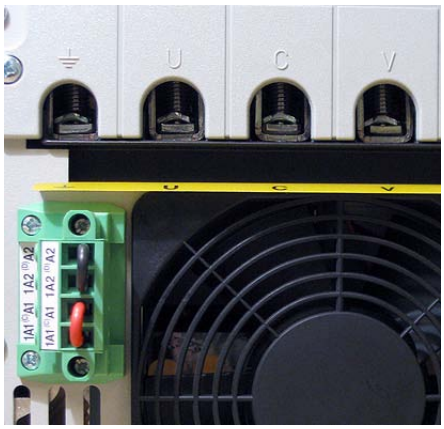

Shown with terminals jumpered for internal armature voltage feedback.

Frame B Armature Voltage Feedback Circuit Terminal Block Location

Top of Drive

Shown with terminals jumpered for internal armature voltage feedback.

Frame C Armature Voltage Feedback Circuit Terminal Block Location

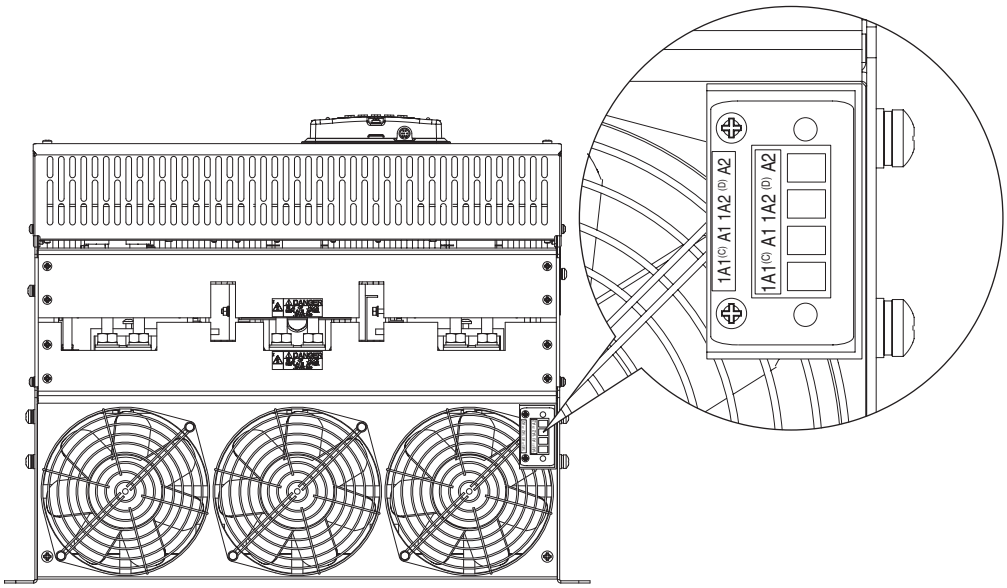

Bottom of Drive

Frame D Armature Voltage Feedback Circuit Terminal Block Location

Shown with terminals jumpered for internal armature voltage feedback.

Bottom of Drive, Left Side

Field Converter Connections

For 575V or 690V AC input drives only, a step down transformer with either a 230 VAC secondary, for a 150V motor field, or 460 VAC, for a 300V motor field, is required before the input to the field control circuit (terminals U1, V1).

Also, If the rated voltage of the DC motor field is not compatible with the field DC output voltage of the drive, an external field control transformer must be used. Refer to the following example for transformer selection information.

Example: 10 Hp, 240V Armature, 17.2A, 240V Field, 2.0 A motor

a. The field control transformer must have a 230V primary, a 460V secondary, and be single-phase, 60 Hz
b. kVA = 2 A x 460VAC x 1.5 = 1.38 kVA (1.5 kVA is closest)

In addition, the following configuration must to completed in the PowerFlex DC drive:

c. Control board DIP switch S14 must be set to select a value of 2 A.
d. Parameter 374 [Drv Fld Brdg Cur] must be programmed to match DIP switch S14 = "2."
e. Parameter 280 [Nom Mtr Fld Amps] must be programmed to the rated motor nameplate field current "2."

Field Converter Terminal Designations

Terminal	Description
U1, V1	Single-phase AC line input power to the field circuit.
C1, D1	DC output power to the motor field.

Frame A Field Circuit Terminal Block Location

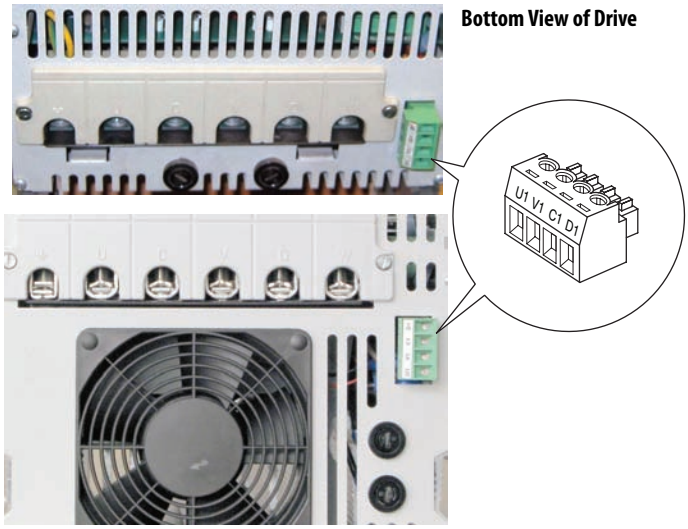

Frame B Field Circuit Terminal Block Location

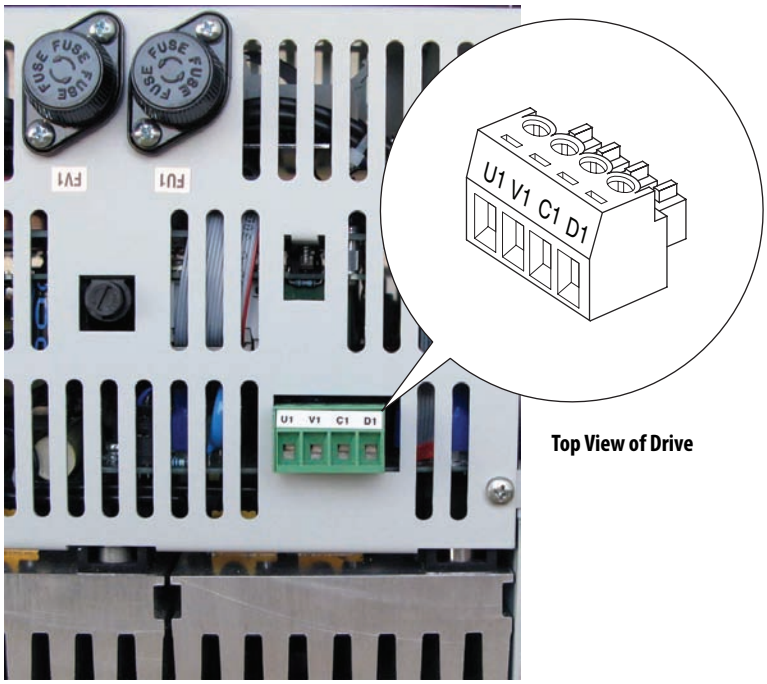

Top View of Drive

Frame C Field Circuit Terminal Block Location

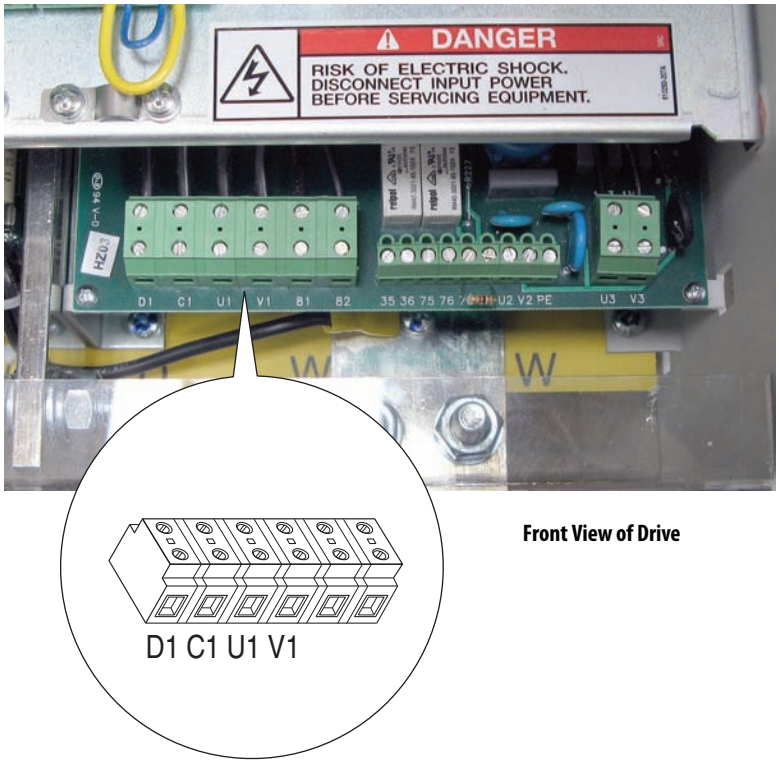

Front View of Drive

Frames A…C Field Circuit Wire Sizes and Terminal Specifications

Terminals	Wire Size and Type(1)	Tightening Torque N•m (lb•in)
U1, V1, C1, D1	24…10 AWG/kcmils	0.5…0.8 (4.4…7.1)

(1) See "Cable and Wiring Recommendations" in the PowerFlex Digital DC Drive User Manual, publication 20P-UM001, for cable spacing information.

Frame D Field Circuit Terminal Block Location

Frame D Field Circuit Wire Sizes and Terminal Specifications

Drive Current Rating Code[1]				Terminals	Wire Size[2]	Tightening Torque
230V	460V	575V	690V			N•m (lb•in)
875	830	810	678	U1, V1, C1, D1	6 AWG	4.0 (35.4)
1K0	996	1K0	791			
–	–	1K2	904			
–	–	1K3	1K0			
–	–	1K6	–			
–	1K1	–	1K1		2 AWG	
–	1K3	–	1K2			
–	1K4	–	1K4			
–	–	–	1K5			

(1) See Catalog Number Explanation on page 5, positions 8, 9 and 10 for corresponding drive HP rating, armature amp rating and field amp rating.

(2) See "Cable and Wiring Recommendations" in the PowerFlex Digital DC Drive User Manual, publication 20P-UM001, for cable spacing information.

Control Circuit Input Power

The control circuit must be powered by an external 230V AC or 115V AC single phase power supply. For frame B and C drives only, a jumper is required between terminals SA and SB for 115V AC control input power. Refer to Frame B drives SA-SB Terminal Block Location on page 36 and Frame C Drives SA-SB Terminal Block Location on page 37 for terminal block locations.

Control Circuit Terminal Designations

Terminal	Description
U2	Single-phase AC power for the control circuits.
V2	

Frame A Control Circuit Terminal Block Location

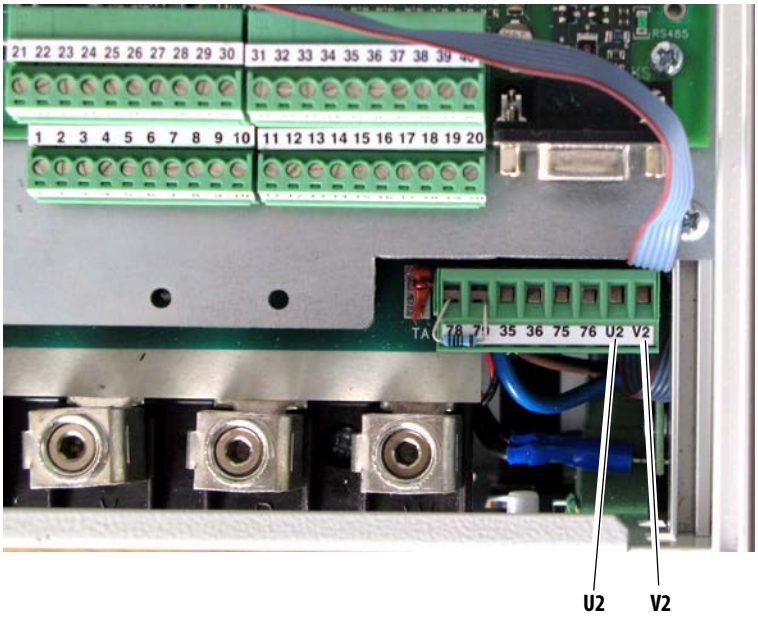

Frame B Control Circuit Terminal Block Location

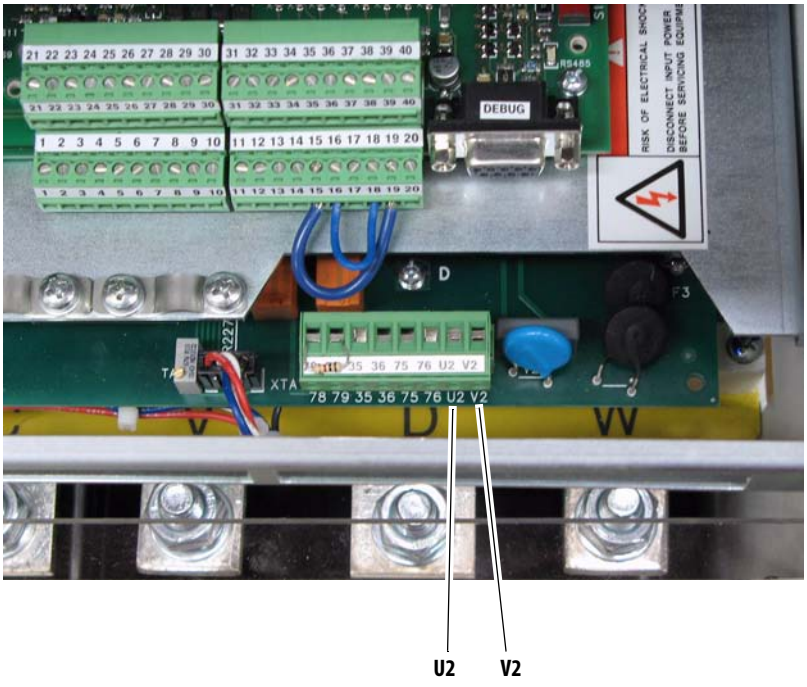

Frame C Control Circuit Terminal Block Location

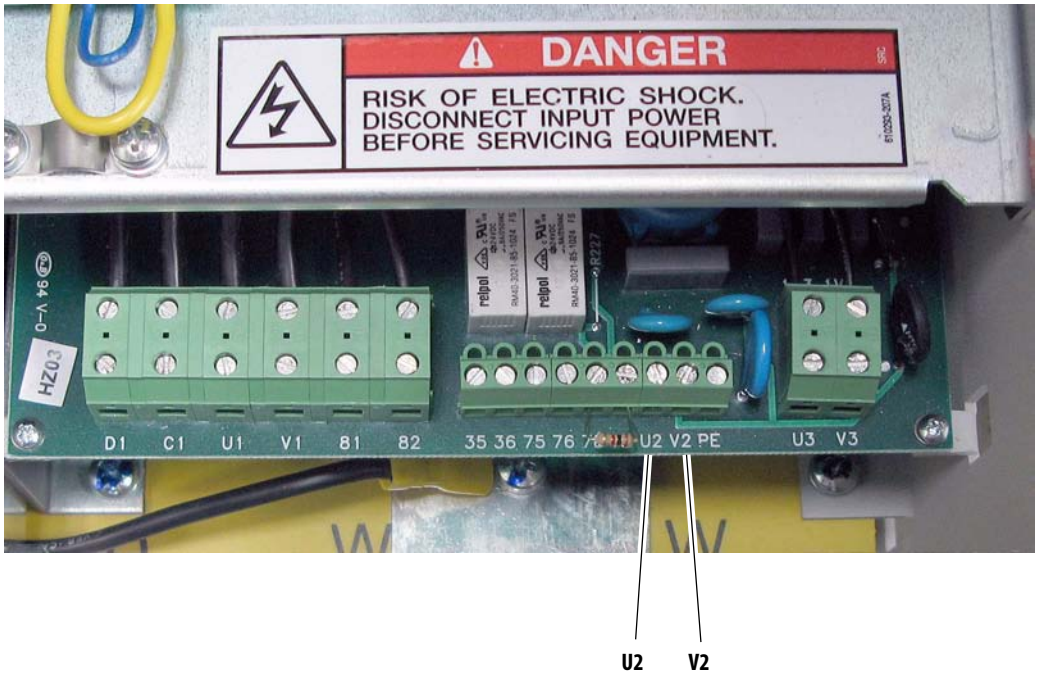

Frame D Control Circuit Terminal Block Location

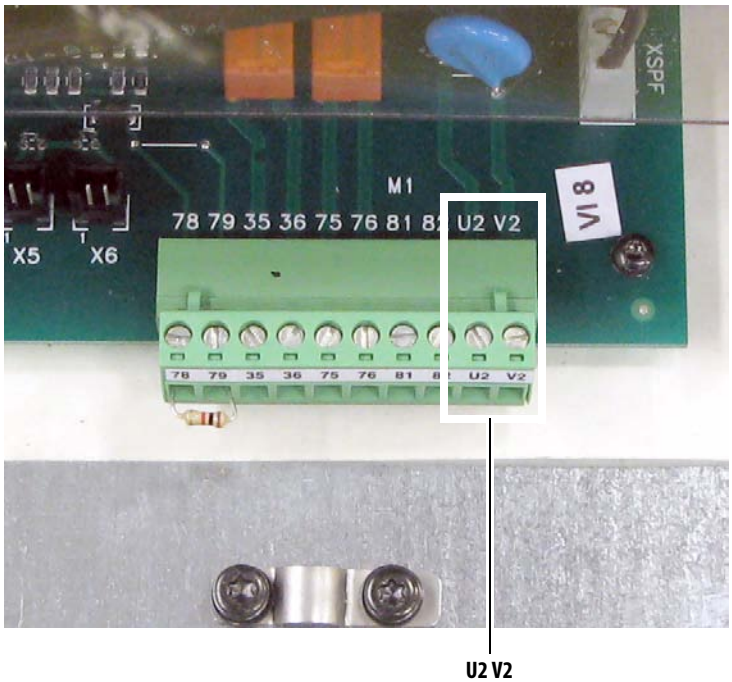

Control Circuit Wire Sizes

Terminals	Wire Size and Type[1]			Tightening Torque
	Flexible (mm^2)	Multi-core (mm^2)	AWG	N•m (lb•in)
U2, V2	0.14…1.5	0.14…2.5	26…14	0.5 (4.4)
PE	2.5…10	2.5…10	12…8	2.0 (18.0)

(1) See "Cable and Wiring Recommendations" in the PowerFlex Digital DC Drive User Manual, publication 20P-UM001, for cable spacing information.

Frame B drives SA-SB Terminal Block Location

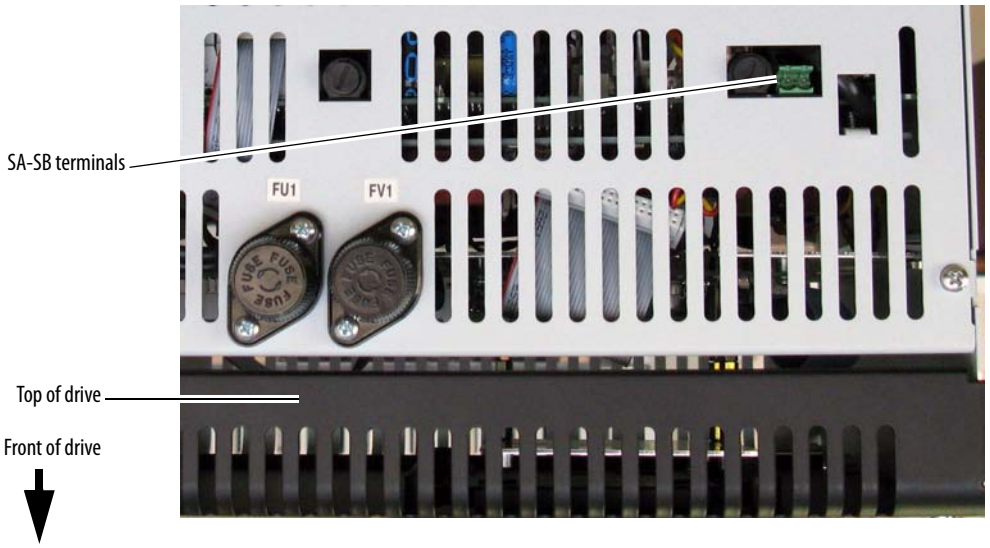

Frame C Drives SA-SB Terminal Block Location

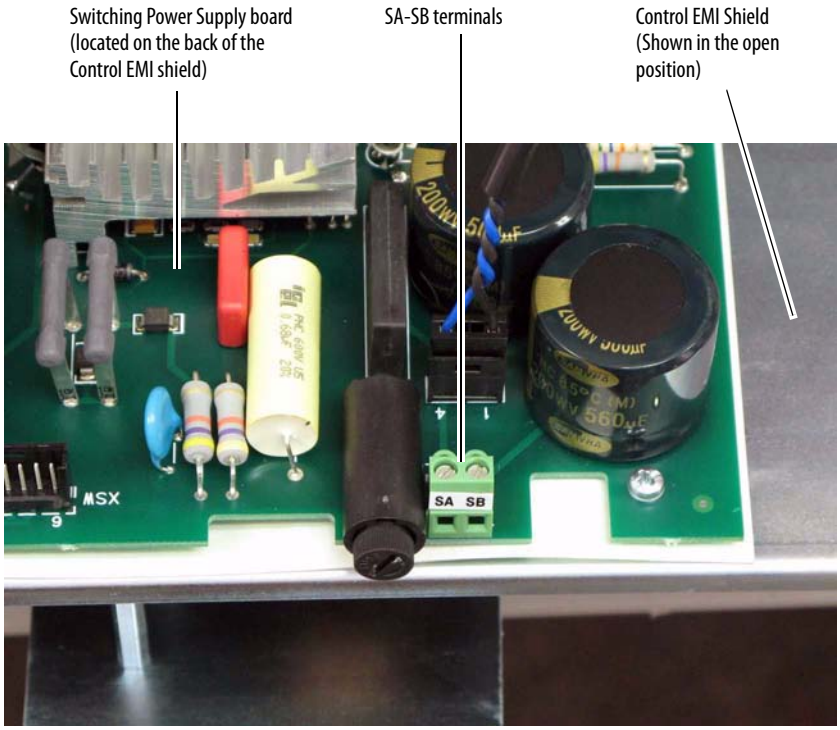

Front of drive shown with top protective cover removed.

Frame C Heatsink Cooling Fans Power Supply Terminals

Frame C drives require an external 230V AC power supply for the heatsink cooling fans. The power supply connections must be taken from the primary side of the installed Isolation Transformer or Line Reactor (clean power). Refer to Typical Power Wiring Diagrams on page 21.

In addition, the fan power input terminals U3 and V3 are required to be short circuit protected. This protection can be provided by using a circuit breaker. The circuit breaker must be selected to survive the short circuit available current of the feeder source for this circuit and the inrush current of the fan.

The rating of the circuit breaker should be sized mainly to protect the wiring from the circuit breaker connections to terminals U3 and V3, and not nuisance trip or blow from the inrush current.

Frame C Heatsink Cooling Fans Terminal Designations

Terminal	Description	Maximum Voltage	Maximum Current
U3	Single-phase AC input power for cooling fans.	230V AC	1 A
V3			

Frame C Heatsink Cooling Fans Wire Sizes and Terminal Specifications

Terminals	Wire Size and Type(1)			Tightening Torque
	Flexible (mm^2)	Multi-core (mm^2)	AWG	N•m (lb•in)
U3, V3	0.14…1.5	0.14…2.5	26…16	0.4 (3.5)

(1) See "Cable and Wiring Recommendations" in the PowerFlex Digital DC Drive User Manual, publication 20P-UM001, for cable spacing information.

Frame C Heatsink Cooling Fan Terminal Block Location

Frame D Heatsink Cooling Fan Power Supply Terminals

Frame D drives require an external 230V AC power supply for the heatsink cooling fan. The power supply connections must be taken from the primary side of the installed Isolation Transformer or Line Reactor (clean power). Refer to Typical Power Wiring Diagrams on page 21.

The fan power input terminals U3 and V3 are required to be short circuit protected. This protection can be provided by using a circuit breaker. The circuit breaker must be selected to survive the short circuit available current of the feeder source for this circuit and the inrush current of the fan.

The rating of the circuit breaker should be sized mainly to protect the wiring from the circuit breaker connections to terminals U3 and V3, and not nuisance trip or blow from the inrush current.

In addition, a N.C. contact (at terminals 31 and 32) can be connected to an external device to provide indication of a fan supply failure or can be wired to drive digital input terminals configured for 14 "Aux Fault" (via Pars133...144).

Frame D Heatsink Cooling Fan Terminal Designations

Terminal	Description	Maximum Voltage	Maximum Current
U3	Single-phase AC input power for cooling fans.	230V AC	2.4…3.3 A
V3			(50/60 Hz)
31	Normally closed contact.	250V AC	1 A
32			
PE	Safety ground		

Frame D Heatsink Cooling Fan Signal Wire Sizes and Terminal Specifications

Terminals	Wire Size and Type(1)			Tightening Torque
	Flexible (mm^2)	Multi-core (mm^2)	AWG	N•m (lb•in)
U3, V3, 31, 32, PE	0.14…1.5	0.14…2.5	28…12	0.5…0.6 (4.4…5.3)

(1) See "Cable and Wiring Recommendations" in the PowerFlex Digital DC Drive User Manual, publication 20P-UM001, for cable spacing information.

Frame D Heatsink Cooling Fan Terminal Block Location

Top of Drive, Left Side

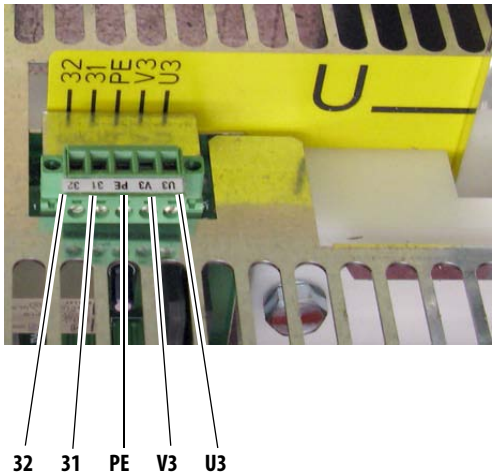

Frame C and D Armature Fuse Signal Terminals

Terminals 81 and 82 on frame C and D drives are connected to the internal armature circuit protection fuses and can be connected to an external device to provide indication that the fuses have opened. Alternatively, terminals 81 and 82 can be wired to drive digital input terminals configured for 64 "Invert Flt" (via Pars 133...144).

Armature Fuse Signal Terminal Designations

Terminal	Description	Maximum Voltage	Maximum Current
81	Internal armature fuse intervention signal.	250V AC	1 A
82			

Armature Fuse Signal Wire Size and Terminal Specifications

Terminals	Wire Size and Type(1)			Tightening Torque
	Flexible (mm^2)	Multi-core (mm^2)	AWG	N•m (lb•in)
81, 82	0.14…1.5	0.14…2.5	26…16	0.4 (3.5)

(1) See "Cable and Wiring Recommendations" in the PowerFlex Digital DC Drive User Manual, publication 20P-UM001, for cable spacing information.

Frame C Internal Armature Fuse Signal Terminal Block Location

Frame D Internal Armature Fuse Signal Terminal Block Location

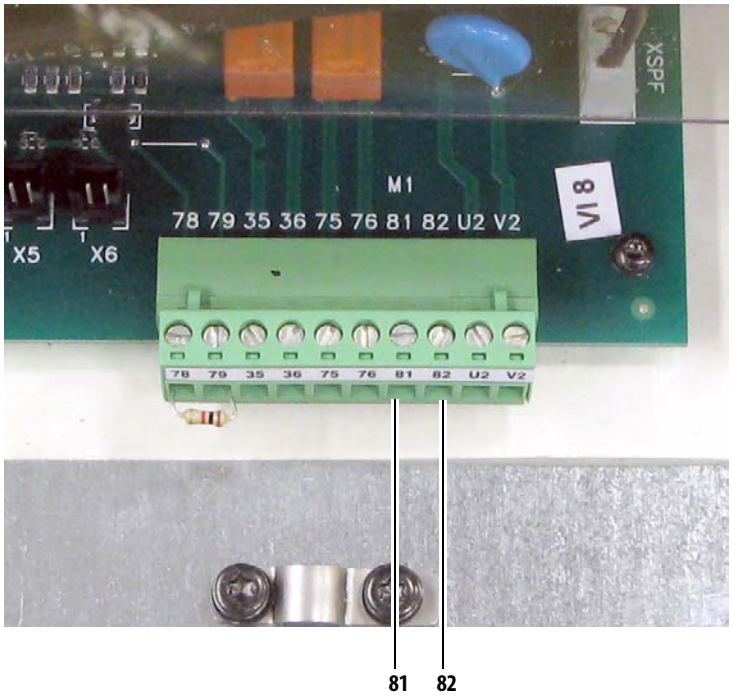

Relay Outputs

Terminals 35 and 36 and 75 and 76 are N.O. relay outputs. The relay output between terminals 35 and 36 is configured with parameter 1392 [Relay Out 1 Sel]. The relay output between terminals 75 and 76 is configured with parameter 629 [Relay Out 2 Sel]. Refer to "Using Contactors" in the PowerFlex Digital DC Drive User Manual, publication 20P-UM001, for more information.

Thermistors and Thermal Switches

To detect motor overheating and protect the motor from overloading, an external, user-supplied thermistor (PTC) or thermal switch must be connected to terminals 78 and 79. The drive's response to a motor over temperature fault is configured in parameter 365 [OverTemp Flt Cfg]. If a temperature sensor is not used, a 1k ohm resistor must be connected between terminals 78 and 79 (installed at the factory). The instructions for installing a thermal sensor are detailed below.

Thermistors (PTC)

PTC thermistors fitted in the motor can be connected directly to the drive via terminals 78 and 79. In this case the 1k ohm resistor is not required between terminals 78 and 79.

Thermal Switches (Klixon®) in the Motor Windings

"Klixon" type temperature-dependent contacts can disconnect the drive from the motor via an external control or can be configured as an external fault using a digital input on drive. They can also be connected to terminals 78 and 79 in order to indicate a drive "Motor Over Temp" fault (F16), though this is not recommended due to the noise sensitivity of the current threshold circuitry. If a thermal switch is used a 1k ohm resistor must be placed in series between the switch and one of the terminals.

Contact Relay and Thermistor Terminal Designations

Terminal	Description
35	Normally open contact. Configured with parameter 1392 [Relay Out 1 Sel] - set to 25 “Contactor” by default.
36	
75	Normally open contact. Configured with parameter 629 [Relay Out 2 Sel] - set to 5 “Ready” by default.
76	
78	Motor thermistor connections (PTC)
79	

Frame A Contact Relay and Thermistor Terminal Block Locations

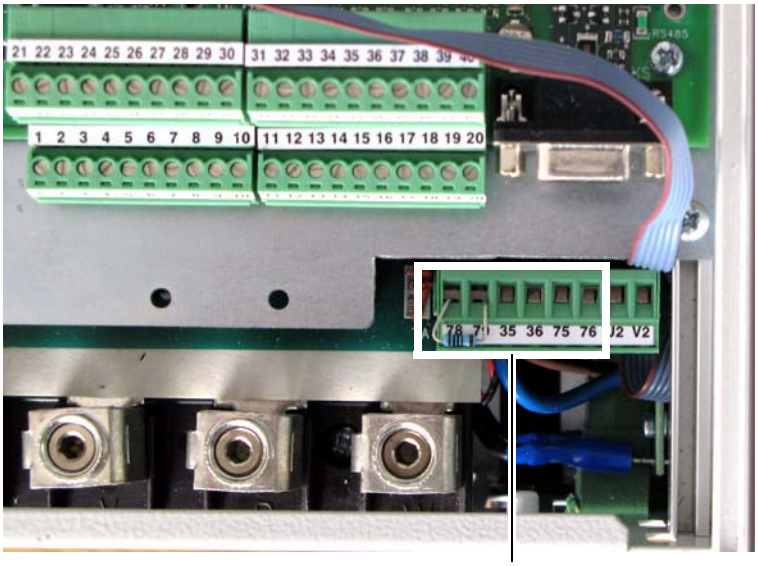

Note: Terminals 78 and 79 shown with 1k ohm resistor in place of temperature sensor.

Frame B Contact Relay and Thermistor Terminal Block Locations

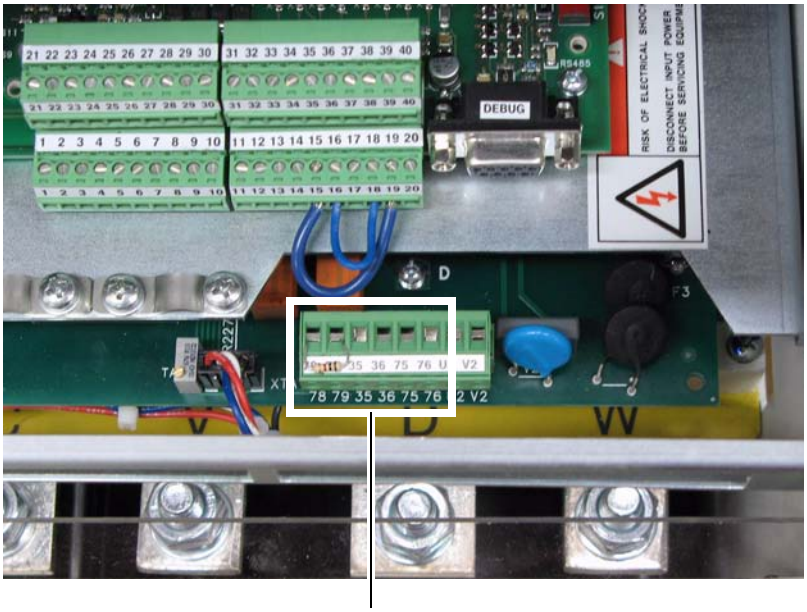

78 79 35 36 75 76

Frame C Contact Relay and Thermistor Terminal Block Locations

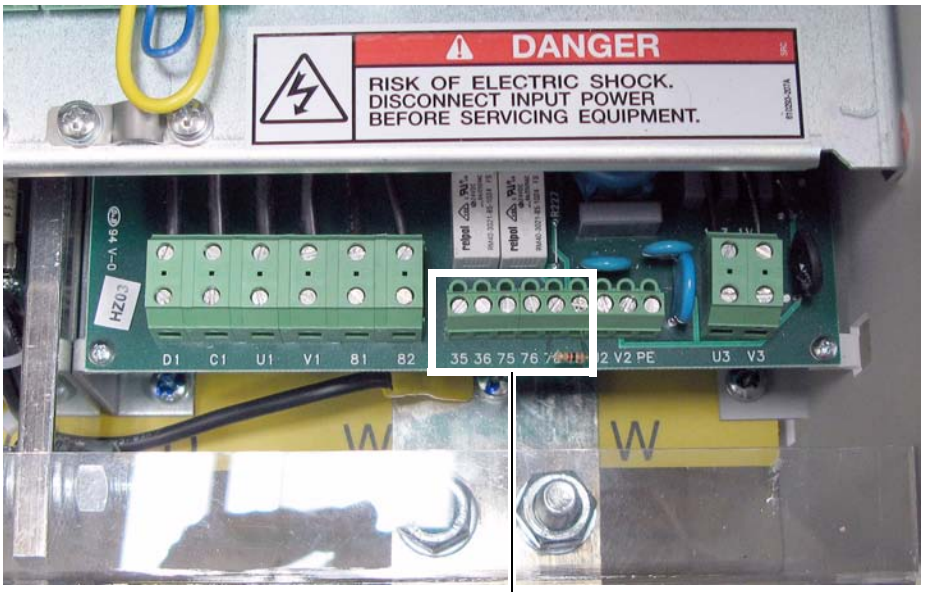

35 36 75 76 78 79

Frame D Contact Relay and Thermistor Terminal Block Locations

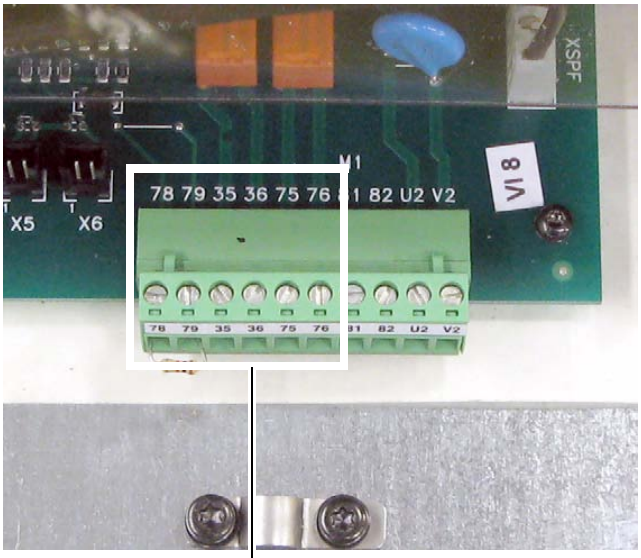

Located on control pan to the left of the HIM cradle.

Recommended Signal Wire Size for Relay Outputs and Thermistor/Thermal Switch Terminals

Signal Type	Terminals	Wire Size and Type(1)			Tightening Torque N•m (lb•in)
		Flexible (mm^2)	Multi-core (mm^2)	AWG	
Relay Outputs	35 & 36, 75 & 76	0.140…1.500	0.140…1.500	26…14	0.5 (4.4)
Thermistor and Thermal Switches	78 & 79				

(1) See "Cable and Wiring Recommendations" in the PowerFlex Digital DC Drive User Manual, publication 20P-UM001, for cable spacing information.

I/O Signal and Control Wiring

Eight (8) digital inputs, four (4) digital outputs, three (3) analog inputs, and two (2) analog outputs are available on the standard I/O terminal blocks provided with the drive. One digital input (1-8) must be configured for "Enable".

Additional digital and analog I/O is available when using the optional I/O Expansion circuit board. Refer to Appendix F - "Optional Analog and Digital I/O Expansion Circuit Board", in the PowerFlex Digital DC Drive User Manual, publication 20P-UM001, for more information. Also, you can use the optional 115V AC Converter circuit board to convert 115V AC digital input signals to 24V DC digital inputs signals to interface with the digital inputs on the standard I/O terminal blocks. Refer to Appendix G - "Optional 115V AC to 24V DC I/O Converter Circuit Board" in the PowerFlex Digital DC Drive User Manual, publication 20P-UM001, for more information. All I/O terminal blocks are located on the control board.

I/O Terminal Block Locations

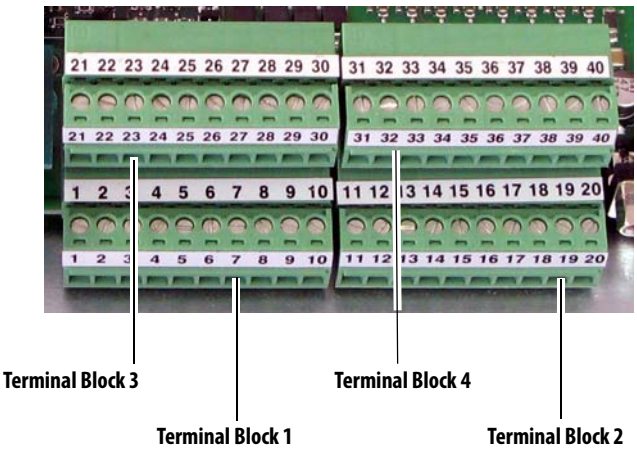

I/O Terminal Block 1 Designations

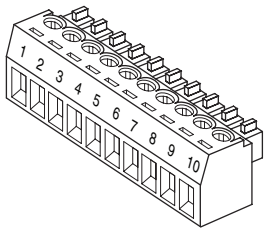

No.	Signal	Description	Factory Default	Related Parameter
1	Analog Input 1 (+)	Isolated (1), bipolar, differential, ±10V / 0-20mA, or 4-20mA.	1 "Speed Ref A"	70 [Anlg In1 Sel]
2	Analog Input 1 (–)			
3	Analog Input 2 (+)	**Important:** 0-20mA or 4-20mA operation requires that switch S9, S10, and S11 on the Control board be in the "Off" position. Drive damage may occur if the switch is not in the correct position based on the type of input signal. Refer to "DIP Switch and Jumper Settings" in the PowerFlex Digital DC Drive User Manual, publication 20P-UM001.	0 "Off"	75 [Anlg In2 Sel]
4	Analog Input 2 (–)			
5	Analog Input 3 (+)		0 "Off"	80 [Anlg In3 Sel]
6	Analog Input 3 (–)	Max ±10V, Max 0.25mA.		
7	+10V Pot Reference	2-5k ohm load. Max ±10V, Max 10mA.	–	–
8	–10V Pot Reference			
9	Pot Common	For (+) and (–) 10V pot references.	–	–
10	PE ground	PE ground to drive chassis.	–	–

(1) Differential Isolation - External source must be maintained at less than 160V with respect to PE. Input provides high common mode immunity.

I/O Terminal Block 2 Designations

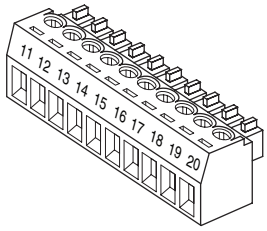

No.	Signal	Description	Factory Default	Related Parameter
11	Internal 0V		–	–
12	Digital Input 1	Max Volt. +30V, Max Cur. 15V/3.2mA, 24V/5mA, and 30V/6.4mA.	2 "Stop/CF"	133 [Digital In1 Sel]
13	Digital Input 2		3 "Start"	134 [Digital In2 Sel]
14	Digital Input 3		11 "Jog"	135 [Digital In3 Sel]
15	Digital Input 4		1 "Enable"(3)	136 [Digital In4 Sel]
16	Digital Input Common(1)		–	–
17	Not Used		–	–
18	24V Supply Common	Common for the internal power supply.	–	–
19	+24V DC Supply	Drive supplied control input power. Max. +20-30V, 200mA(2)	–	–
20	PE ground	PE ground to drive chassis.	–	–

(1) When using the internal +24V DC supply (terminal 19) for digital inputs 1-4, you must connect the digital input common (terminal 16) to the +24V supply common (terminal 18).
(2) The total current draw is the sum of encoder power, digital outputs and any other loads connected to terminal 19.
(3) A digital input (1-8) must be configured for "Enable".

I/O Terminal Block 3 Designations

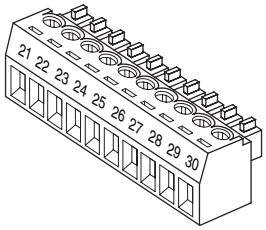

No.	Signal	Description	Factory Default	Related Parameter
21	Analog Output 1 (+)	Max. ±10V, Max. 5 mA.	12 "Motor Speed"	66 [Anlg Out1 Sel]
22	Analog Output 1 (–)			
23	Analog Output 2 (+)		13 "Motor Curr"	67 [Anlg Out2 Sel]
24	Analog Output 2 (–)			
25	Digital Output Common		–	–
26	Digital Output 1	Max. +30V, Max 50mA	5 "Ready"	145 [Digital Out1 Sel]
27	Digital Output 2		9 "Fault"	146 [Digital Out2 Sel]
28	Digital Output 3		2 "Spd Thresh"	147 [Digital Out3 Sel]
29	Digital Output 4		4 "CurrentLimit"	148 [Digital Out4 Sel]
30	+24V DC	Drive supplied power for Digital Outputs. Max. +30V, Max. 80mA.	–	–

I/O Terminal Block 4 Designations

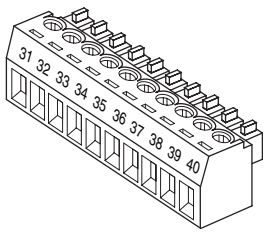

No.	Signal	Description	Factory Default	Related Parameter
31	Digital Input 5	Max Volt. +30V, Max Cur. 15V/3.2mA, 24V/5mA, and 30V/6.4mA.	17 "Speed Sel 1"	137 [Digital In5 Sel]
32	Digital Input 6		18 "Speed Sel 2"	138 [Digital In6 Sel]
33	Digital Input 7		19 "Speed Sel 3"	139 [Digital In7 Sel]
34	Digital Input 8		31 "Contactor"	140 [Digital In8 Sel]
35	Digital Input Common	**Important:** When using the internal +24V DC supply (terminal 19) for digital inputs 5-8, you must connect the digital input common (terminal 35) to the +24V supply common (terminal 18).	–	–
36-40	Not Used		–	–

Recommended Signal Wire Size for Analog I/O and Digital I/O

Signal Type	Terminal Block (Terminals)	Wire Size and Type(1)			Tightening Torque N•m (lb•in)
		Flexible (mm^2)	Multi-core (mm^2)	AWG	
Analog and Digital I/O	TB1…4 (1…40)	0.140…1.500	0.140…1.500	26…16	0.4 (3.5)

(1) See "Cable and Wiring Recommendations" in the PowerFlex Digital DC Drive User Manual, publication 20P-UM001, for cable spacing information.

Digital Encoder Terminal Block

The encoder connection cables should always be connected directly to the terminals on the encoder terminal block. The encoder cable must be made up of twisted pairs with the shield connected to the shield ground on the drive side. Do not connect the shield to ground on the motor side. In some cases (i.e., cable lengths that exceed 100 meters), it may be necessary to ground the shield of each twisted pair on the power supply. Refer to Appendix A of the PowerFlex Digital DC Drive User Manual, publication 20P-UM001, for Digital Encoder specifications.

Digital Encoder Terminal Designations

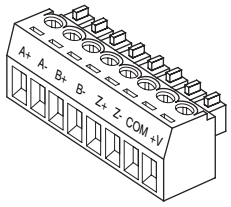

No.	Description	
A+	Encoder A	Single channel or quadrature A input
A-	Encoder A (NOT)	
B+	Encoder B	Dual channel quadrature B input
B-	Encoder B (NOT)	
Z+	Encoder Z	Pulse, marker or registration input (2)
Z-	Encoder Z (NOT)	
COM	+5/12-15V (1) DC Return	Internal power common
+V	+5/12-15V (1) DC Power	Internal power source 200 mA

(1) Selectable via switch S21 on the Control board. Refer to "DIP Switch and Jumper Settings" in the PowerFlex Digital DC Drive User Manual, publication 20P-UM001, for more information.

(2) Selectable via switch S20 on the Control board. Refer to "DIP Switch and Jumper Settings" in the PowerFlex Digital DC Drive User Manual, publication 20P-UM001, for more information.

Digital Encoder Terminal Block Location

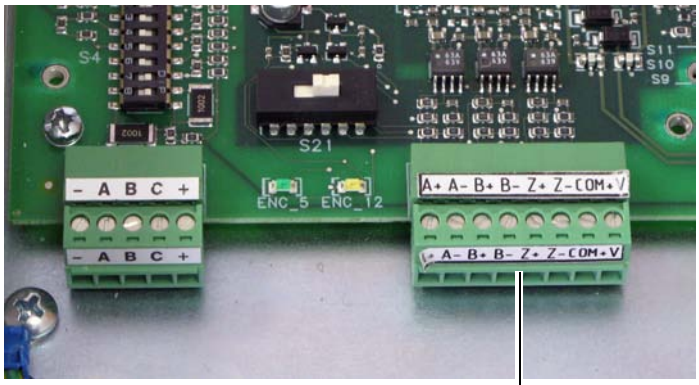

Digital Encoder terminal block

Sample Encoder Wiring

I/O	Connection Example
Encoder Power – (1) **Internal Drive Power** Internal (drive) +5/12-15V DC, 200mA	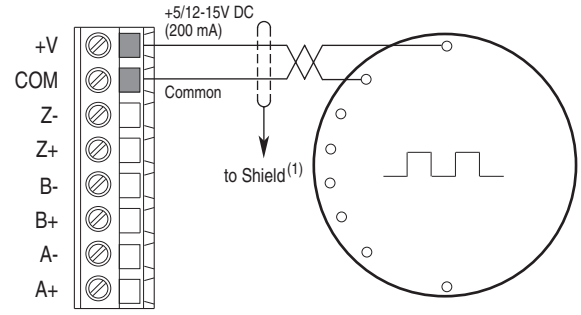
Encoder Power –External Power Source	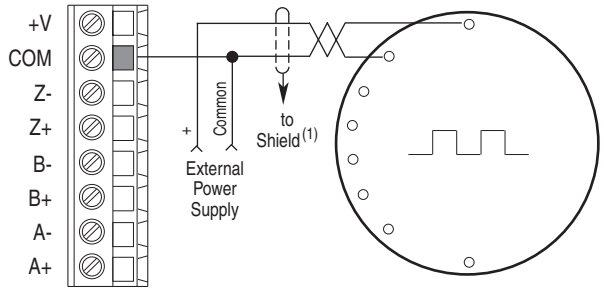
Encoder Signal –Single-Ended, Dual Channel	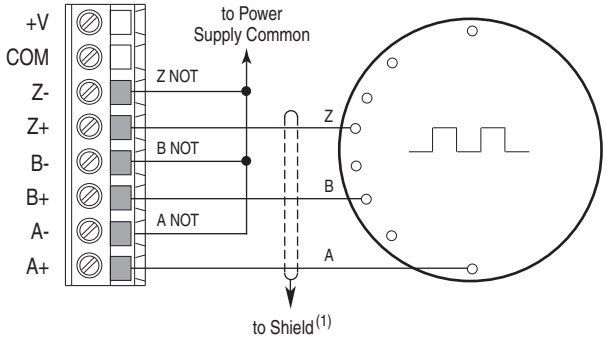
Encoder Signal –Differential, Dual Channel	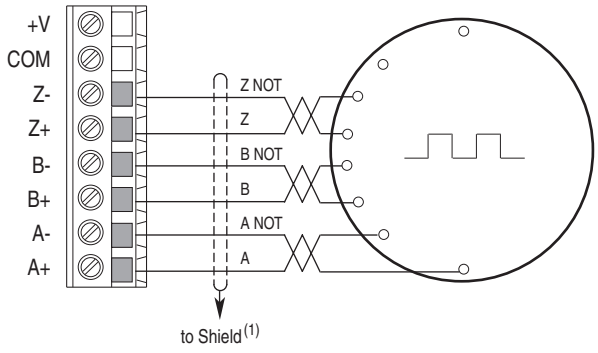

(1) Shield connection is on the drive Control EMI Shield. Refer to Digital Encoder Terminal Block Location on page 47.

DC Analog Tachometer Terminal Block

ATTENTION: The Drive can overspeed if DIP switch S4 is set incorrectly, or the tachometer is wired incorrectly. Failure to observe this precaution could result in damage to, or destruction of, the equipment.

DC Analog Tachometer Terminal Designations

	No.	Signal	Description
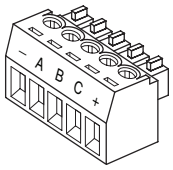	–	Negative input	–
	A	(Not Used)	
	B		
	C		
	+	Positive input Feedback polarity is determined during the start up routine.	22.7 / 45.4 / 90.7 / 181.6 / 302.9V(1) max voltage 8 mA max. current

(1) Maximum voltage depends on the configuration of DIP switch S4. Refer to the PowerFlex® Digital DC Drive User Manual, publication 20P-UM001 for information on jumper settings.

Analog Tachometer Terminal Block Location

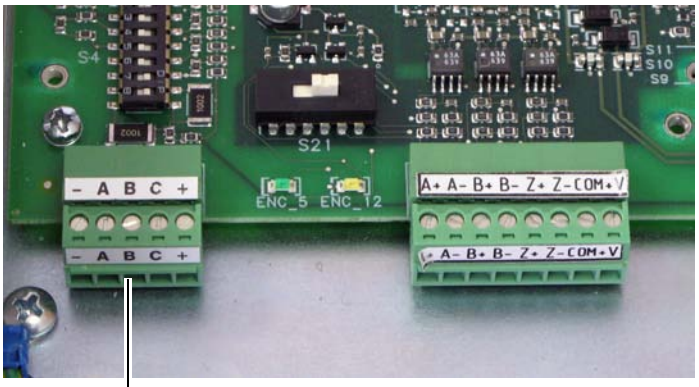

Analog Tachometer terminal block

Recommended Signal Wire Size for DC Analog Tachometer

Signal Type	Terminal Block (Terminals)	Wire Type and Size(1)			Tightening Torque N•m (lb•in)
		Flexible (mm^2)	multi-core (mm^2)	AWG	
DC Analog Tach	M3 (+ and –)	0.140…1.500	0.140…1.500	26…16	0.4 (3.5)

(1) See "Cable and Wiring Recommendations in the PowerFlex Digital DC Drive User Manual, publication 20P-UM001.

Resolver Feedback Module

The resolver feedback module (catalog number 20P-RES-A0), which provides a drive interface to a selection of compatible resolvers, must be ordered and purchased separately from the drive. The resolver option module includes the PowerFlex DC Drive Resolver Feedback Module Installation Instructions, publication 20P-IN071, which provides installation and wiring information. See "Resolver Type Selection" in the PowerFlex Digital DC Drive User Manual, publication 20P-UM001, for more information on compatible resolvers.

Circuit Protection

The tables on the following pages provide drive ratings and the recommended fuses for protecting the armature and field circuits. Externally mounted fuses (as indicated in the figures below) must be sourced separately when installing the drive. Internally mounted fuses are provided with the drive. See page 56 for frames C and D fuse information.

Frame A and B Fuse Designations

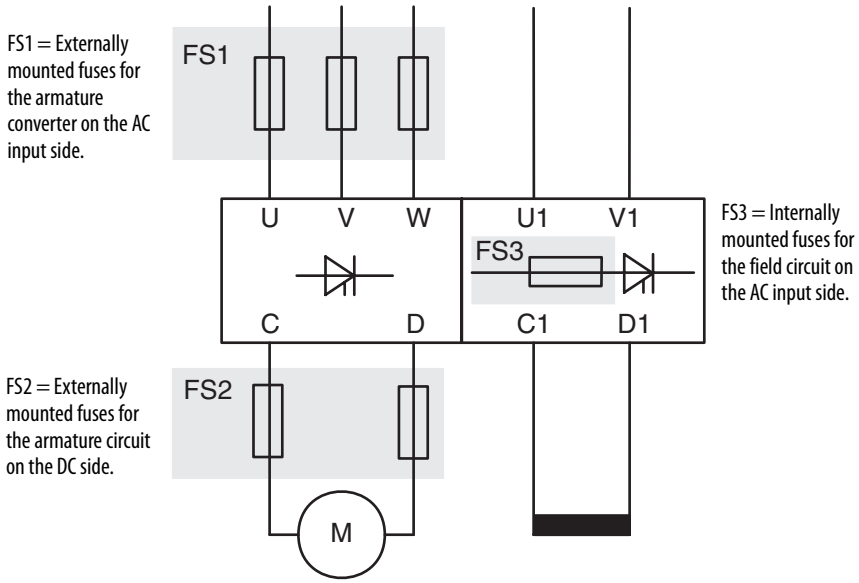

Frame A and B Recommended AC Input Line Fuses

AC input line fuses are externally mounted for frame A and B drives and must be sourced separately. See Fuse Code FS1 in Frame A and B Fuse Designations on page 50.

230V AC Input Drives

Frame	Drive Current Rating Code	DC Amps	AC Line Amps	Bussmann				Ferraz Shawmut (Gould Shawmut)	
				Ferrule FWP Type	Ferrule Fuse Block	North American FWP Type	North American Fuse Block	Ferrule A70QS Type	North American A70P / A70QS Type
A	7P0	7	5.7	FWP-10A14F	CH143D	FWP-10B	–	A70QS10-14F	A70P10-4
	9P0	9	7.4	FWP-15A14F		FWP-15B	–	A70QS16-14F	A70P15-4
	012	12	9.8	FWP-20A14F		FWP-20B	–	A70QS20-14F	A70P20-4
	020	20	16	FWP-25A14F		FWP-25B	–	A70QS25-14F	A70QS25-4
	029	29	24	FWP-40A22F	CH223D	FWP-40B	–	A70QS40-22F	A70QS40-4
	038	38	31	FWP-63A22F		FWP-60B	–	A70QS63-22F	A70QS60-4
	055	55	45	FWP-80A22F		FWP-80B	–	A70QS80-22F	A70QS80-4
	073	73	60	–	–	FWP-100A	–	–	A70QS100-4K
	093	93	76	–	–	FWP-150A	BH-1133	–	A70QS150-4K
	110	110	90	–	–	FWP-175A		–	A70QS175-4K
B	146	146	119	–	–	FWP-250A		–	A70QS250-4
	180	180	147	–	–	FWP-300A		–	A70QS300-4
	218	218	178	–	–	FWP-350A		–	A70QS350-4
	265	265	217	–	–	FWP-400	BH-3144	–	A70QS400-4
	360	360	294	–	–	FWP-600A		–	A70QS600-4K
	434	434	355	–	–	FWP-600A		–	A70QS600-4

460V AC Input Drives

Frame	Drive Current Rating Code	DC Amps	AC Line Amps	Bussmann				Ferraz Shawmut (Gould Shawmut)	
				Ferrule FWP Type	Ferrule Fuse Block	North American FWP Type	North American Fuse Block	Ferrule A70QS Type	North American A70P / A70QS Type
A	4P1	4.1	3.3	FWP-10A14F	CH143D	FWP-10B	–	A70QS10-14F	A70P10-4
	6P0	6	4.9	FWP-10A14F		FWP-10B	–	A70QS10-14F	A70P10-4
	010	10	8.2	FWP-20A14F		FWP-20B	–	A70QS20-14F	A70P25-4
	014	14	11.4	FWP-25A14F		FWP-25B	–	A70QS25-14F	A70P25-4
	019	19	15.5	FWP-25A14F		FWP-25B	–	A70QS25-14F	A70P25-4
	027	27	22.1	FWP-40A22F	CH223D	FWP-40B	–	A70QS40-22F	A70QS40-4
	035	35	28.6	FWP-63A22F		FWP-60B	–	A70QS63-22F	A70QS60-4
	045	45	36.8	FWP-80A22F		FWP-80B	–	A70QS80-22F	A70QS80-4
	052	52	42.5	FWP-80A22F		FWP-80B	–	A70QS80-22F	A70QS80-4
	073	73	59.6	–	–	FWP-100A	–	–	A70QS100-4K
	086	86	70.3	–	–	FWP-150A	BH-1133	–	A70QS150-4K
	100	100	81.7	–	–	FWP-175A		–	A70QS175-4K
	129	129	105.4	–	–	FWP-175A		–	A70QS175-4K
B	167	167	136.4	–	–	FWP-300A		–	A70QS300-4
	207	207	169.1	–	–	FWP-350A		–	A70QS350-4
	250	250	204.3	–	–	FWP-400A	BH-3144	–	A70QS400-4
	330	330	269.6	–	–	FWP-600A		–	A70QS600-4K
	412	412	336.6	–	–	FWP-600A		–	A70QS600-4

575V AC Input Drives

Frame	Drive Current Rating Code	DC Amps	AC Line Amps	Bussmann		Ferraz Shawmut (Gould Shawmut)
				North American FWP Type	North American FWP Fuse Block	North American A70QS Type
B	067	67.5	55.1	FWP-100A	–	A70QS100-4
	101	101.3	82.7	FWP-175A	BH-1133	A70QS175-4K
	135	135	110.3	FWP-225A		A70QS225-4
	270	270	220.6	FWP-450A	BH-3144	A70QS450-4
	405	405	330.9	FWP-600A		A70QS600-4K

Frame A and B Recommended Armature DC Output Fuses

Armature DC output fuses are externally mounted for frame A and B drives and must be sourced separately. These fuses are required on four quadrant drives only, but highly recommended on two quadrant drives. See Fuse Code FS2 in Frame A and B Fuse Designations on page 50.

230V AC Input Drives

Frame	Drive Current Rating Code	DC Amps	AC Line Amps	Bussmann				Ferraz Shawmut (Gould Shawmut)	
				Ferrule FWP Type	Ferrule Fuse Block	North American FWP Type	North American Fuse Block	Ferrule A70QS Type	North American A70P / A70QS Type
A	7P0	7	5.7	FWP-15A14F	CH142D	FWP-15B	–	A70QS16-14F	A70P15-4
	9P0	9	7.4	FWP-20A14F		FWP-20B	–	A70QS20-14F	A70P20-4
	012	12	9.8	FWP-25A14F		FWP-25B	–	A70QS25-14F	A70P25-4
	020	20	16	FWP-40A14F		FWP-40B	–	A70QS40-14F	A70QS40-4
	029	29	24	FWP-63A22F	CH222D	FWP-60B	–	A70QS63-22F	A70QS60-4
	038	38	31	FWP-80A22F		FWP-80B	–	A70QS80-22F	A70QS80-4
	055	55	45	–	–	FWP-125A	BH-1133	–	A70QS125-4K
	073	73	60	–	–	FWP-150A		–	A70QS150-4K
	093	93	76	–	–	FWP-200A		–	A70QS200-4K
	110	110	90	–	–	FWP-225A		–	A70QS250-4
B	146	146	119	–	–	FWP-300A		–	A70QS300-4
	180	180	147	–	–	FWP-350A		–	A70QS350-4
	218	218	178	–	–	FWP-450A	BH-3144	–	A70QS450-4
	265	265	217	–	–	FWP-600A		–	A70QS600-4K
	360	360	294	–	–	FWP-700A		–	A70QS700-4
	434	434	355	–	–	FWP-900A		–	A70P900-4

460V AC Input Drives

Frame	Drive Current Rating Code	DC Amps	AC Line Amps	Bussmann				Ferraz Shawmut (Gould Shawmut)	
				Ferrule FWP Type	Ferrule Fuse Block	North American FWP Type	North American Fuse Block	Ferrule A70QS Type	North American A70P / A70QS Type
A	4P1	4.1	3.3	FWP-10A14F	CH142D	FWP-10B	–	A70QS10-14F	A70P10-4
	6P0	6	4.9	FWP-15A14F		FWP-15B	–	A70QS16-14F	A70P15-4
	010	10	8.2	FWP-20A14F		FWP-20B	–	A70QS20-14F	A70P20-4
	014	14	11.4	FWP-30A14F		FWP-30B	–	A70QS32-14F	A70P30-4
	019	19	15.5	FWP-40A14F		FWP-40B	–	A70QS40-14F	A70QS40-4
	027	27	22.1	FWP-63A22F	CH222D	FWP-60B	–	A70QS63-22F	A70QS60-4
	035	35	28.6	FWP-80A22F		FWP-70B	–	A70QS80-22F	A70QS70-4
	045	45	36.8	FWP-100A22F		FWP-90B	–	–	A70QS90-4
	052	52	42.5	FWP-100A22F		FWP-100B	–	–	A70QS100-4
	073	73	59.6	–	–	FWP-150A	BH-1133	–	A70QS150-4K
	086	86	70.3	–	–	FWP-175A		–	A70QS175-4K
	100	100	81.7	–	–	FWP-200A		–	A70QS200-4K
	129	129	105.4	–	–	FWP-250A		–	A70QS250-4
B	167	167	136.4	–	–	FWP-350A		–	A70QS350-4
	207	207	169.1	–	–	FWP-400A	BH-3144	–	A70QS400-4
	250	250	204.3	–	–	FWP-500A		–	A70QS500-4K
	330	330	269.6	–	–	FWP-700A		–	A70QS700-4
	412	412	336.6	–	–	FWP-800A		–	A70QS800-4

575V AC Input Drives

Frame	Drive Current Rating Code	DC Amps	AC Line Amps	Bussmann		Ferraz Shawmut (Gould Shawmut)
				North American FWP Type	North American FWP Fuse Block	North American A70P / A70QS Type
B	067	67.5	55.1	FWP-125A	BH-1133	A70QS125-4K
	101	101.3	82.7	FWP-200A		A70QS200-4K
	135	135	110.3	FWP-250A		A70QS250-4
	270	270	220.6	FWP-600A	BH-3144	A70QS600-4K
	405	405	330.9	FWP-800A		A70QS800-4

Frame A and B Recommended Field Circuit Fuses

Field circuit fuses are internally mounted and provided with the drive. See Fuse Code FS3 in Frame A and B Fuse Designations on page 50. Also, see Frame A Field AC Input Line Fuses Location on page 55 and Frame B Field AC Input Line Fuses Location on page 56 for fuse locations.

230V AC Input Drives

Frame	Drive Current Rating Code	Field Amps	Type	Quantity	Bussmann	Ferraz Shawmut (Gould Shawmut)	SIBA
A	7P0	10	6 x 32 mm	2	FWH-016A6F	E085449	70 125 40.16
	9P0						
	012						
	020						
	029						
	038						
	055						
	073	14					
	093						
	110						
B	146	20	10 x 38 mm	2	FWC-25A10F	A60Q25-2	60 033 05.25
	180						
	218						
	265						
	360						
	434						

460V AC Input Drives

Frame	Drive Current Rating Code	Field Amps	Type	Quantity	Bussmann	Ferraz Shawmut (Gould Shawmut)	SIBA
A	4P1	10	6 x 32 mm	2	FWH-016A6F	E085449	70 125 40.16
	6P0						
	010						
	014						
	019						
	027						
	035						
	045						
	052						
	073	14					
	086						
	100						
	129						
B	167	20	10 x 38 mm	2	FWC-25A10F	A60Q25-2	60 033 05.25
	207						
	250						
	330						
	412						

575V AC Input Drives

Frame	Drive Current Rating Code	Field Amps	Quantity	Type	Bussmann	Ferraz Shawmut (Gould Shawmut)	SIBA
B	067	20	2	10 x 38 mm	FWC-25A10F	A60Q25-2	60 033 05.25
	101						
	135						
	270						
	405						

Frame A Field AC Input Line Fuses Location

Bottom View of Drive with Fan

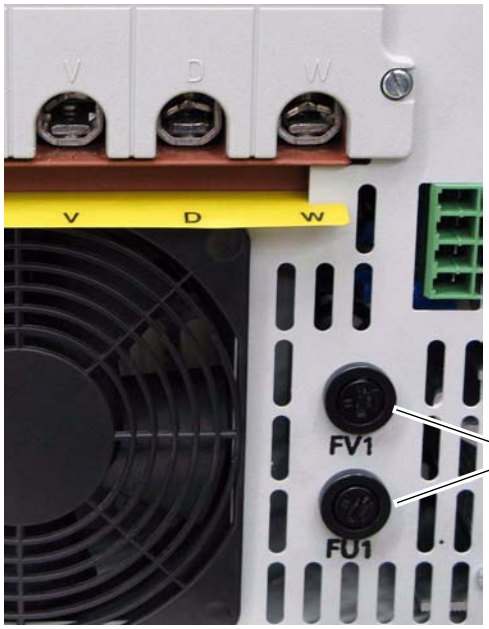

Bottom View of Drive without Fan

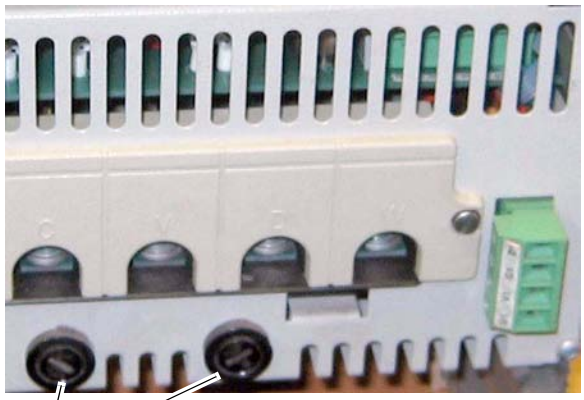

Field circuit fuses

Frame B Field AC Input Line Fuses Location

Top View of Drive

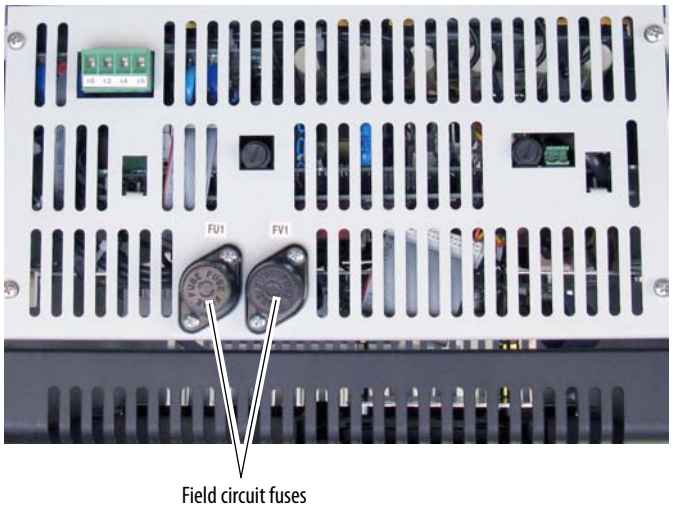

Frame C and D Fuse Designations

All fuses for armature and field circuit protection are internally mounted and provided with frame C and D drives.

FS4 = Internally mounted fuses for the armature converter on the AC input side.

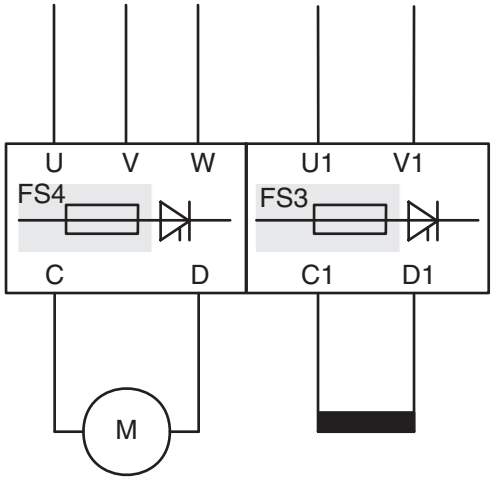

FS3 = Internally mounted fuses for the field circuit on the AC input side.

Frame C and D Recommended Field Circuit Fuses

Field circuit fuses for frames C and D drives are internally mounted (labeled FU1 and FV1) and provided with the drive. See Fuse Code FS3 in Frame C and D Fuse Designations on page 56. Also, see Frame C Field Circuit Fuse Location on page 58 and Frame D Field Circuit Fuse Location on page 58 for locations.

230V AC Input Drives

Frame	Drive Current Rating Code	Field Amps	Type	Qty	Bussmann	Ferraz Shawmut (Gould Shawmut)	SIBA
C	521	20	10 x 38 mm	2	FWC-25A10F	A60Q25-2	6003305.25
D	875	40	22 x 58 mm		FWP-50A22F	A70QS50-22F	5014006.50
	1K0						

460V AC Input Drives

Frame	Drive Current Rating Code	Field Amps	Type	Qty	Bussmann	Ferraz Shawmut (Gould Shawmut)	SIBA
C	495	20	10 x 38 mm	2	FWC-25A10F	A60Q25-2	6003305.25
	667					A60Q25-8	
D	830	40	22 x 58 mm		FWP-50A22F	A70QS50-22F	5014006.50
	996						
	1K1	70			FWP-100A22F	A70QS100-22F	5014006.100
	1K3						
	1K4						

575V AC Input Drives

Frame	Drive Current Rating Code	Field Amps	Type	Qty	Bussmann	Ferraz Shawmut (Gould Shawmut)	SIBA
C	540	20	10 x 38 mm	2	FWC-25A10F	A60Q25-2	6003305.25
	675					A60Q25-8	
D	810	40	22 x 58 mm		FWP-50A22F	A70QS50-22F	5014006.50
	1K0						
	1K2						
	1K3						
	1K6						

690V AC Input Drives

Frame	Drive Current Rating Code	Field Amps	Type	Qty	Bussmann	Ferraz Shawmut (Gould Shawmut)	SIBA
C	452	20	10 x 38 mm	2	FWC-25A10F	A60Q25-2	6003305.25
	565					A60Q25-8	
D	678	40	22 x 58 mm		FWP-50A22F	A70QS50-22F	5014006.50
	791						
	904						
	1K0						
	1K1	70			FWP-100A22F	A70QS100-22F	5014006.100
	1K2						
	1K4						
	1K5						

Frame C Field Circuit Fuse Location

Field AC input fuses are located on the Control EMI shield, which holds the Control board.

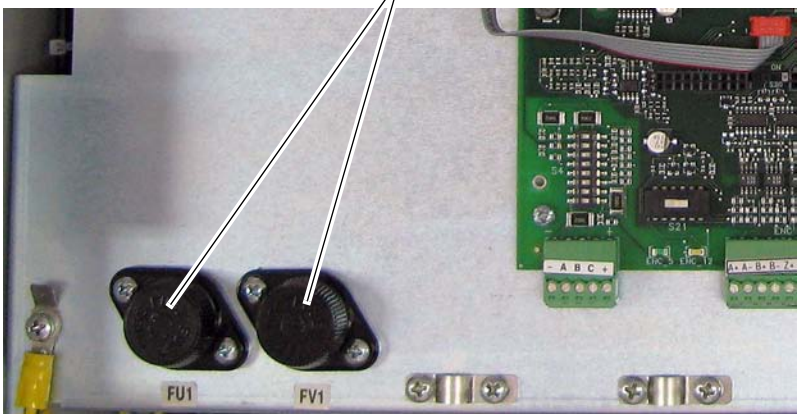

Frame D Field Circuit Fuse Location

Top, left side of drive control panel.

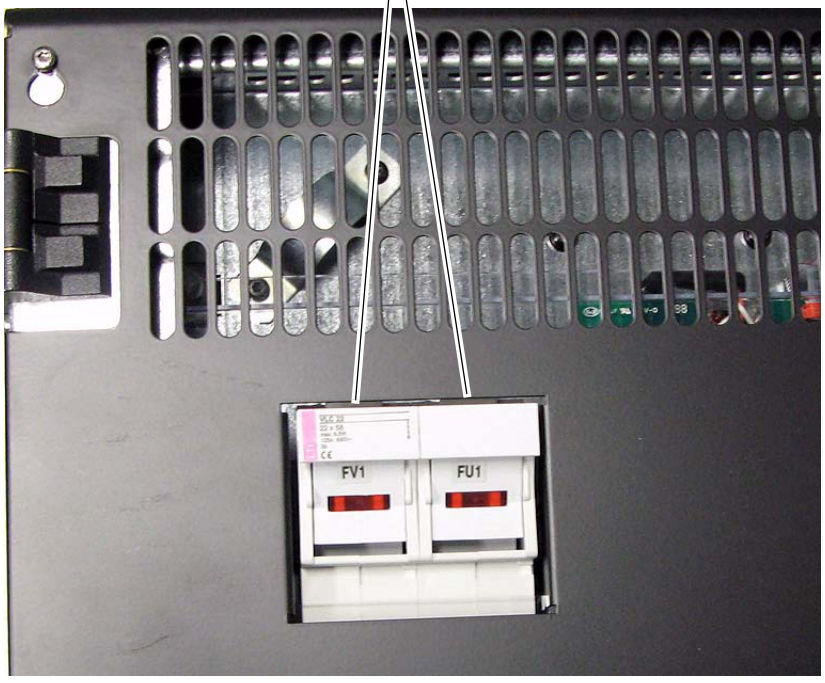

Fuses for Regenerative Frame C and D Drives

Leg fuses are internally mounted and provided with frames C and D drives. See Fuse Code FS4 in Frame C and D Fuse Designations on page 56. Also, see Frame C Regenerative Drive - Leg Fuse Location on page 60 and Frame D Regenerative Drive - Leg Fuse Location on page 61.

Recommended Leg Fuses - 230V AC Input Frame C Drives

Frame	Drive Current Rating Code	DC Amps	AC Line Amps	Qty	Bussmann	Ferraz Shawmut (Gould Shawmut)	SIBA
					Square Body - Flush End Contact		
C	521	521	426	6	170M5464 + switch 170H0069	6,9 URD 32 TTF 800 + switch MS 3-V1-5 BS	20 671 32.800 + switch 28 001 04
	700	700	571	6	170M5464 + switch 170H0069	6,9 URD 32 TTF 800 + switch MS 3V 1-5 BS	20 671 32.800 + switch 28 001 04

Recommended Leg Fuses - 230V AC Input Frame D Drives

Frame	Drive Current Rating Code	DC Amps	AC Line Amps	Qty	Bussmann	Ferraz Shawmut (Gould Shawmut)	SIBA
					Square Body - DIN 43653 Stud-Mount		
D	875	875	715	6	170M6263 + switch 170H0069	Y300263 + switch MS 3V 1-5 UR	20 635 32.900 + switch 28 001 04
	1K0	1050	858	6	170M6264 + switch 170H0069	Z300264 + switch MS 3V 1-5 UR	20 635 32.1000 + switch 28 001 04

Recommended Leg Fuses - 460V AC Input Frame C Drives

Frame	Drive Current Rating Code	DC Amps	AC Line Amps	Qty	Bussmann	Ferraz Shawmut (Gould Shawmut)	SIBA
					Square Body - Flush End Contact		
C	495	495	404.4	6	170M5462 + switch 170H0069	6,9 URD 32 TTF 630 + switch MS 3-V1-5 BS	20 671 32.630 + switch 28 001 04
	667	667	544.9	6	170M5464 + switch 170H0069	6,9 URD 32 TTF 800 + switch MS 3-V1-5 BS	20 671 32.800 + switch 28 001 04

Recommended Leg Fuses - 460V AC Input Frame D Drives

Frame	Drive Current Rating Code	DC Amps	AC Line Amps	Qty	Bussmann	Ferraz Shawmut (Gould Shawmut)	SIBA
					Square Body - DIN 43653 Stud-Mount		
D	830	830	678.1	6	170M6262 + switch 170H0069	X300262 + switch MS 3V 1-5 UR	20 635 32.800 + switch 28 001 04
	996	996	813.7	6	170M6264 + switch 170H0069	Z300264 + switch MS 3V 1-5 UR	20 635 32.1000 + switch 28 001 04
	1K1	1162	949.4	6	170M6265 + switch 170H0069	A300262 + switch MS 3V 1-5 UR	20 635 32.1100 + switch 28 001 04
	1K3	1328	1085.0	6	170M6266 + switch 170H0069	B300266 + switch MS 3V 1-5 UR	20 635 32.1250 + switch 28 001 04
	1K4	1494	1220.6	6	170M6267 + switch 170H0069	C300267 + switch MS 3V 1-5 UR	20 635 32.1400 + switch 28 001 04

Recommended Leg Fuses - 575V AC Input Frame C Drives

Frame	Drive Current Rating Code	DC Amps	AC Line Amps	Qty	Bussmann	Ferraz Shawmut (Gould Shawmut)	SIBA
					Square Body - Flush End Contact		
C	540	540	441	6	–	11 URD 72 TTF 0800 + switch MS 3V 1-5 BS	20 771 32.800 + switch 28 001 04
	675	675	551	6	–	11 URD 72 TTF 0800 + switch MS 3V 1-5 BS	20 771 32.800 + switch 28 001 04

Recommended Leg Fuses - 575V AC Input Frame D Drives

Frame	Drive Current Rating Code	DC Amps	AC Line Amps	Qty	Bussmann	Ferraz Shawmut (Gould Shawmut)	SIBA
					Square Body - DIN 43653 Stud-Mount		
D	810	810	661	6	170M6246 + switch 170H0069	J300572 + switch MS 3V 1-5 UR	20 735 32.800 + switch 28 001 04
	1K0	1080	881	6	170M6248 + switch 170H0069	L300574 + switch MS 3V 1-5 UR	20 735 32.1000 + switch 28 001 04
	1K2	1215	991	12	170M6244 + switch 170H0069	G300570 + switch MS 3V 1-5 UR	20 735 32.630 + switch 28 001 04
	1K3	1350	1102	12	170M6245 + switch 170H0069	H300571 + switch MS 3V 1-5 UR	20 735 32.700 + switch 28 001 04
	1K6	1688	1377	12	170M6246 + switch 170H0069	J300572 + switch MS 3V 1-5 UR	20 735 32.800 + switch 28 001 04

Recommended Leg Fuses - 690V AC Input Frame C Drives

Frame	Drive Current Rating Code	DC Amps	AC Line Amps	Qty	Bussmann	Ferraz Shawmut (Gould Shawmut)	SIBA
					Square Body - Flush End Contact		
C	452	452	369	6	170M5394 + switch 170H0069	12,5 URD 72 TTF 0500 + switch MS 3V 1-5 BS	20 771 32.500 + switch 28 001 04
	565	565	461	6	–	12,5 URD 72 TTF 0630 + switch MS 3V 1-5 BS	20 771 32.630 + switch 28 001 04

Recommended Leg Fuses - 690V AC Input Frame D Drives

Frame	Drive Current Rating Code	DC Amps	AC Line Amps	Qty	Bussmann	Ferraz Shawmut (Gould Shawmut)	SIBA
					Square Body - DIN 43653 Stud-Mount		
D	678	678	553	6	170M6244 + switch 170H0069	G300570 + switch MS 3V 1-5 UR	20 735 32.630 + switch 28 001 04
	791	791	645	6	170M6246 + switch 170H0069	J300572 + switch MS 3V 1-5 UR	20 735 32.800 + switch 28 001 04
	904	904	738	6	170M6247 + switch 170H0069	K300573 + switch MS 3V 1-5 UR	20 735 32.900 + switch 28 001 04
	1K0	1017	830	6	170M6248 + switch 170H0069	L300574 + switch MS 3V 1-5 UR	20 735 32.1000 + switch 28 001 04
	1K1	1130	922	12	170M6244 + switch 170H0069	G300570 + switch MS 3V 1-5 UR	20 735 32.630 + switch 28 001 04
	1K2	1243	1014	12	170M6244 + switch 170H0069	G300570 + switch MS 3V 1-5 UR	20 735 32.630 + switch 28 001 04
	1K4	1413	1153	12	170M6245 + switch 170H0069	H300571 + switch MS 3V 1-5 UR	20 735 32.700 + switch 28 001 04
	1K5	1582	1291	12	170M6246 + switch 170H0069	J300572 + switch MS 3V 1-5 UR	20 735 32.800 + switch 28 001 04

Frame C Regenerative Drive - Leg Fuse Location

Note: Drive shown with front covers removed and Control EMI shield lowered.

Leg fuses and switches are located on the bus bars behind the Control EMI shield, which holds the Control board.

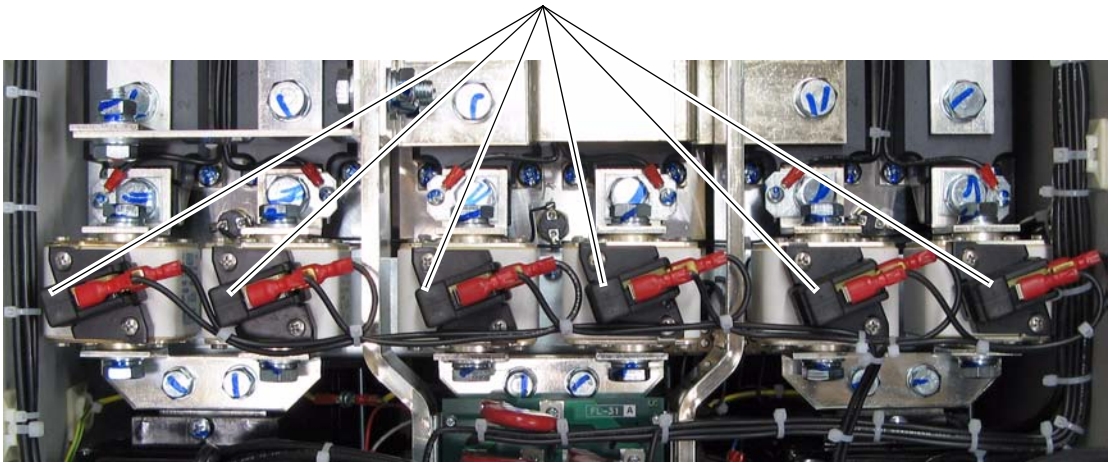

Frame D Regenerative Drive - Leg Fuse Location

Note: Drive shown with Control EMI shield in open position.

Leg fuses and switches are located on the bus bars behind the Control EMI shield, which holds the Control board.

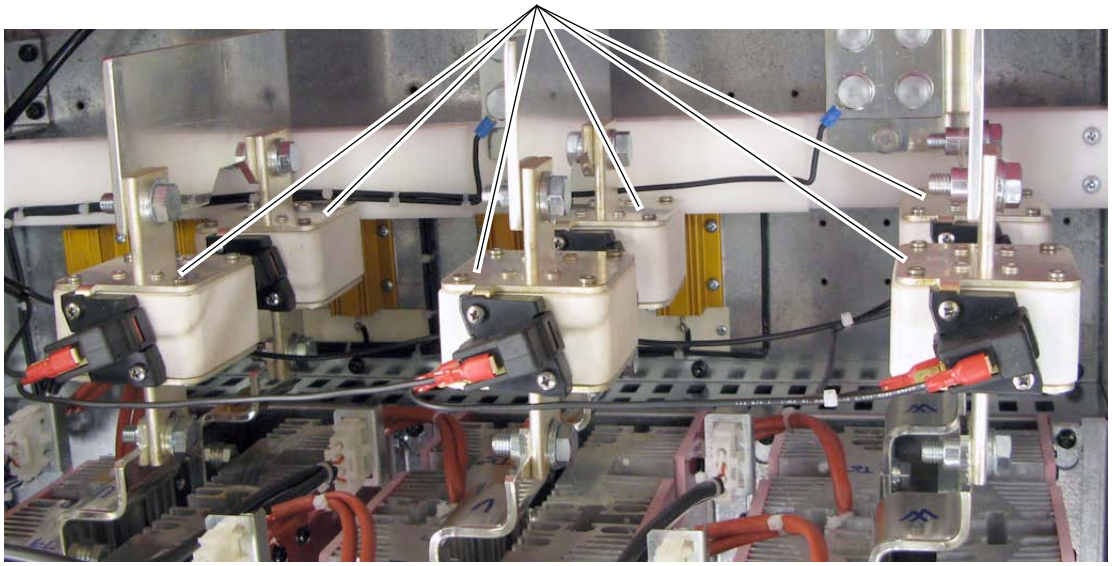

Fuses for Non-Regenerative Frame C and D Drives

AC input line and/or leg fuses are internally mounted and provided with frames C and D drives. See Fuse Code FS4 in Frame C and D Fuse Designations on page 56. Also, see Frame C Non-Regenerative Drive - AC Input Line Fuse Location on page 63.

Recommended AC Input Line Fuses - 230V AC Input Frame C

Frame	Drive Current Rating Code	DC Amps	AC Line Amps	Qty	Bussmann	Ferraz Shawmut (Gould Shawmut)	SIBA
					Square Body - Flush End Contact		
C	521	521	426	3	170M5466 + switch 170H0069	6,9 URD 32 TTF 1000 + switch MS 3-V1-5 BS	20 671 32.1000 + switch 28 001 04
	700	700	571	3	170M5466 + switch 170H0069	6,9 URD 32 TTF 1000 + switch MS 3V 1-5 BS	20 671 32.1000 + switch 28 001 04

Recommended Leg Fuses - 230V AC Input Frame D Drives

Frame	Drive Current Rating Code	DC Amps	AC Line Amps	Qty	Bussmann	Ferraz Shawmut (Gould Shawmut)	SIBA
					Square Body - DIN 43653 Stud-Mount		
D	875	875	715	6	170M6263 + switch 170H0069	Y300263 + switch MS 3V 1-5 UR	20 635 32.900 + switch 28 001 04
	1K0	1050	858	6	170M6264 + switch 170H0069	Z300264 + switch MS 3V 1-5 UR	20 635 32.1000 + switch 28 001 04

Recommended AC Input Line Fuses - 460V AC Input Frame C

Frame	Drive Current Rating Code	DC Amps	AC Line Amps	Qty	Bussmann	Ferraz Shawmut (Gould Shawmut)	SIBA
					Square Body - Flush End Contact		
C	495	495	404.4	3	170M5464 + switch 170H0069	6,9 URD 32 TTF 800 + switch MS 3-V1-5 BS	20 671 32.800 + switch 28 001 04
	667	667	544.9	3	170M5466 + switch 170H0069	6,9 URD 32 TTF 1000 + switch MS 3-V1-5 BS	20 671 32.1000 + switch 28 001 04

Recommended Leg Fuses - 460V AC Input Frame D Drives

Frame	Drive Current Rating Code	DC Amps	AC Line Amps	Qty	Bussmann	Ferraz Shawmut (Gould Shawmut)	SIBA
					Square Body - DIN 43653 Stud-Mount		
D	830	830	678.1	6	170M6262 + switch 170H0069	X300262 + switch MS 3V 1-5 UR	20 635 32.800 + switch 28 001 04
	996	996	813.7	6	170M6264 + switch 170H0069	Z300264 + switch MS 3V 1-5 UR	20 635 32.1000 + switch 28 001 04
	1K1	1162	949.4	6	170M6265 + switch 170H0069	A300262 + switch MS 3V 1-5 UR	20 635 32.1100 + switch 28 001 04
	1K3	1328	1085.0	6	170M6266 + switch 170H0069	B300266 + switch MS 3V 1-5 UR	20 635 32.1250 + switch 28 001 04
	1K4	1494	1220.6	6	170M6267 + switch 170H0069	C300267 + switch MS 3V 1-5 UR	20 635 32.1400 + switch 28 001 04

Recommended AC Input Line Fuses - 575V AC Input Frame C Drives

Frame	Drive Current Rating Code	DC Amps	AC Line Amps	Qty	Bussmann	Ferraz Shawmut (Gould Shawmut)	SIBA
					Square Body - Flush End Contact		
C	540	540	441	3	170M5466 + switch 170H0069	6,9 URD 32 TTF 1000 + switch MS 3V 1-5 BS	20 671 32.1000 + switch 28 001 04
	675	675	551	3	170M5466 + switch 170H0069	6,9 URD 32 TTF 1000 + switch MS 3V 1-5 BS	20 671 32.1000 + switch 28 001 04

Recommended Leg Fuses - 575V AC Input Frame D Drives

Frame	Drive Current Rating Code	DC Amps	AC Line Amps	Qty	Bussmann	Ferraz Shawmut (Gould Shawmut)	SIBA
					Square Body - DIN 43653 Stud-Mount		
D	810	810	661	6	170M6262 + switch 170H0069	X300262 + switch MS 3V 1-5 UR	20 635 32.800 + switch 28 001 04
	1K0	1080	881	6	170M6264 + switch 170H0069	Z300264 + switch MS 3V 1-5 UR	20 635 32.1000 + switch 28 001 04
	1K2	1215	991	6	170M6265 + switch 170H0069	A300262 + switch MS 3V 1-5 UR	20 635 32.1100 + switch 28 001 04
	1K3	1350	1102	6	170M6266 + switch 170H0069	B300266 + switch MS 3V 1-5 UR	20 635 32.1250 + switch 28 001 04
	1K6	1688	1377	12	170M6262 + switch 170H0069	X300262 + switch MS 3V 1-5 UR	20 635 32.800 + switch 28 001 04

Recommended AC Input Line Fuses - 690V AC Input Frame C Drives

Frame	Drive Current Rating Code	DC Amps	AC Line Amps	Qty	Bussmann	Ferraz Shawmut (Gould Shawmut)	SIBA
					Square Body - Flush End Contact		
C	452	452	369	6	170M5463 + switch 170H0069	6,9 URD 32 TTF 0700 + switch MS 3V 1-5 BS	20 671 32.700 + switch 28 001 04
	565	565	461	6	170M5465 + switch 170H0069	6,9 URD 32 TTF 0900 + switch MS 3V 1-5 BS	20 671 32.900 + switch 28 001 04

Recommended Leg Fuses - 690V AC Input Frame D Drives

Frame	Drive Current Rating Code	DC Amps	AC Line Amps	Qty	Bussmann	Ferraz Shawmut (Gould Shawmut)	SIBA
					Square Body - DIN 43653 Stud-Mount		
D	678	678	553	6	170M6260 + switch 170H0069	V300260 + switch MS 3V 1-5 UR	20 635 32.630 + switch 28 001 04
	791	791	645	6	170M6262 + switch 170H0069	X300262 + switch MS 3V 1-5 UR	20 635 32.800 + switch 28 001 04
	904	904	738	6	170M6263 + switch 170H0069	Y300263 + switch MS 3V 1-5 UR	20 635 32.900 + switch 28 001 04
	1K0	1017	830	6	170M6264 + switch 170H0069	Z300264 + switch MS 3V 1-5 UR	20 635 32.1000 + switch 28 001 04
	1K1	1130	922	6	170M6265 + switch 170H0069	A300262 + switch MS 3V 1-5 UR	20 635 32.1100 + switch 28 001 04
	1K2	1243	1014	6	170M6266 + switch 170H0069	B300266 + switch MS 3V 1-5 UR	20 635 32.1250 + switch 28 001 04
	1K4	1413	1153	6	170M6267 + switch 170H0069	C300267 + switch MS 3V 1-5 UR	20 635 32.1400 + switch 28 001 04
	1K5	1582	1291	12	170M6262 + switch 170H0069	X300262 + switch MS 3V 1-5 UR	20 635 32.800 + switch 28 001 04

Frame C Non-Regenerative Drive - AC Input Line Fuse Location

AC Input fuses and switches are located on the bus bars behind the Control EMI shield, which holds the Control board.

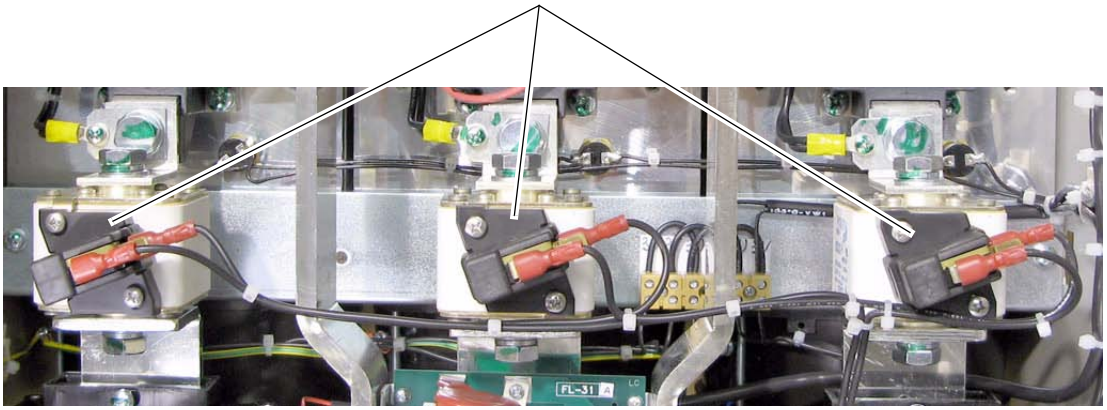

Note: Drive shown with front covers removed and Control EMI shield lowered.

Control Power Circuit Protection Fuses

The following fuses are used to protect the Switching Power Supply circuit.

IMPORTANT Verify the circuit board revision prior to ordering and installing fuses.

Frame	Circuit Board ID / Revision	Designation	Fuse (5 x 20 mm)
A	SW1-31 / H & below	F1	1 A, 250V, slow
	SW1-31 / I & above	F1	2.5 A, 250V, slow
B	SW2-32 / H & below	F1	3.15 A, 250V fast
		F2	2.5 A, 250V slow
	SW2-32 / I & above	F1	2.5 A, 250V slow
		F2	
C	SW3-32 / H & below	F1	3.15 A, 250V fast
		F2	2.5 A, 250V slow
	SW3-32 / I & above	F1	2.5 A, 250V slow
		F2	
D	SW1-31 / I & above	F1	2.5 A, 250V, slow

Frame A Switching Power Supply Fuse Location

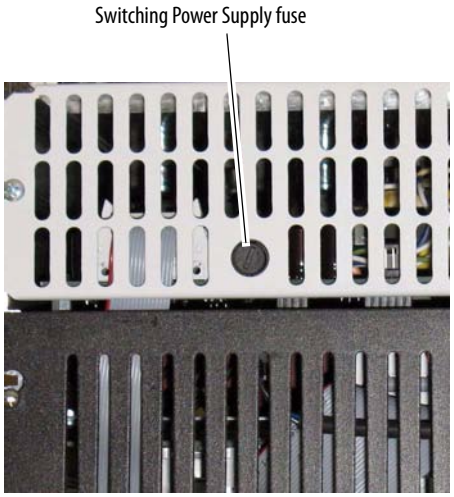

Frame B Switching Power Supply Fuse Location

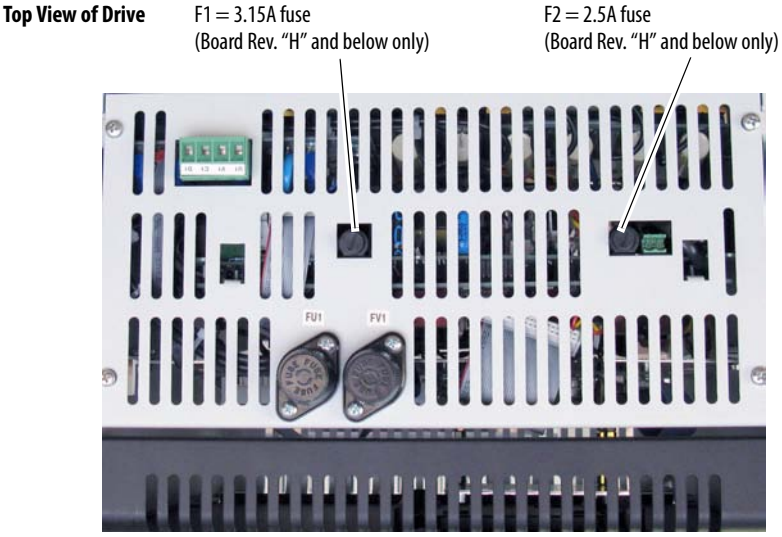

Frame C Switching Power Supply Fuse Location

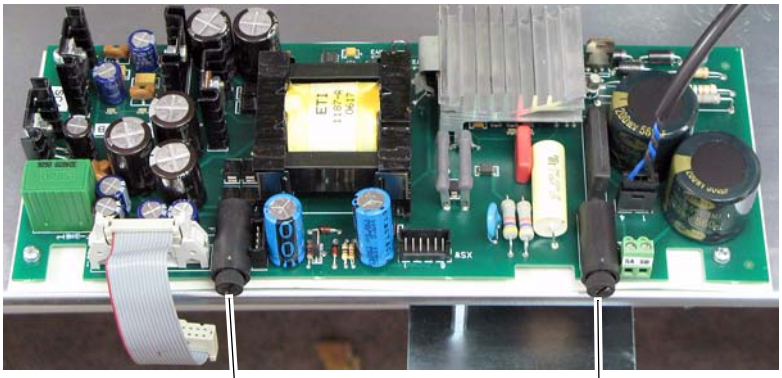

F1 = 3.15A fuse
(Board Rev. "H" and below only)

F2 = 2.5A fuse
(Board Rev. "H" and below only)

Fuses are located on the Switching Power Supply circuit board (SW-2) on the back of the Control EMI shield, which holds the Control board.

Frame D Switching Power Supply Circuit Board Fuse Location

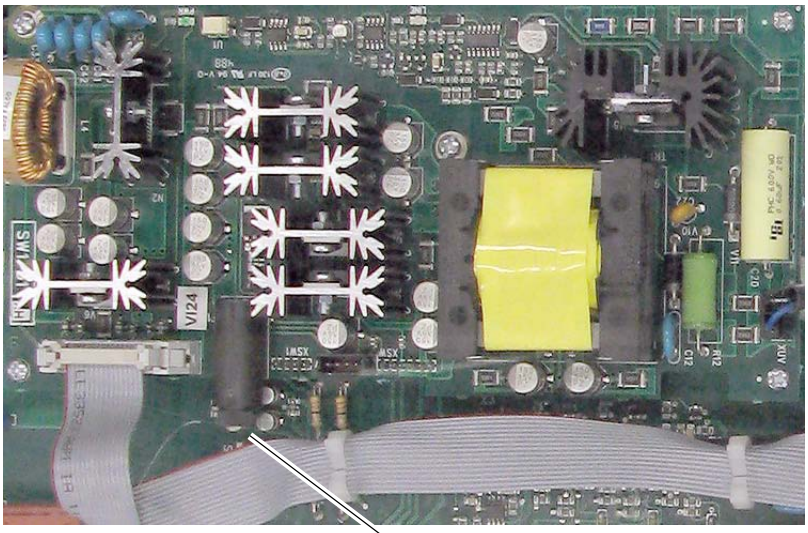

Switching Power Supply fuse holder

The Switching Power Supply circuit board is located on the Control EMI shield.

Mounting

Operating Conditions and Temperatures

PowerFlex DC drives are designed to operate at 0°...50° C (32°... 122° F) surrounding air temperature without derating. The drive must be mounted in a clean, dry location. Contaminants such as oils, corrosive vapors and abrasive debris must be kept out of the enclosure. NEMA/UL Type Open, IP20 enclosures are intended for indoor use primarily to provide a degree of protection against contact with enclosed equipment. These enclosures offer no protection against airborne contaminants.

Minimum Mounting Clearances

Minimum clearance requirements are intended to be from drive to drive. Other objects can occupy this space; however, reduced airflow may cause protection circuits to fault the drive. See Drive Enclosure Minimum Mounting Clearances below. The drive must be mounted in a vertical orientation as shown below and must not be mounted at an angle greater than 30° from vertical. In addition, inlet air temperature must not exceed the product specification.

Drive Enclosure Minimum Mounting Clearances

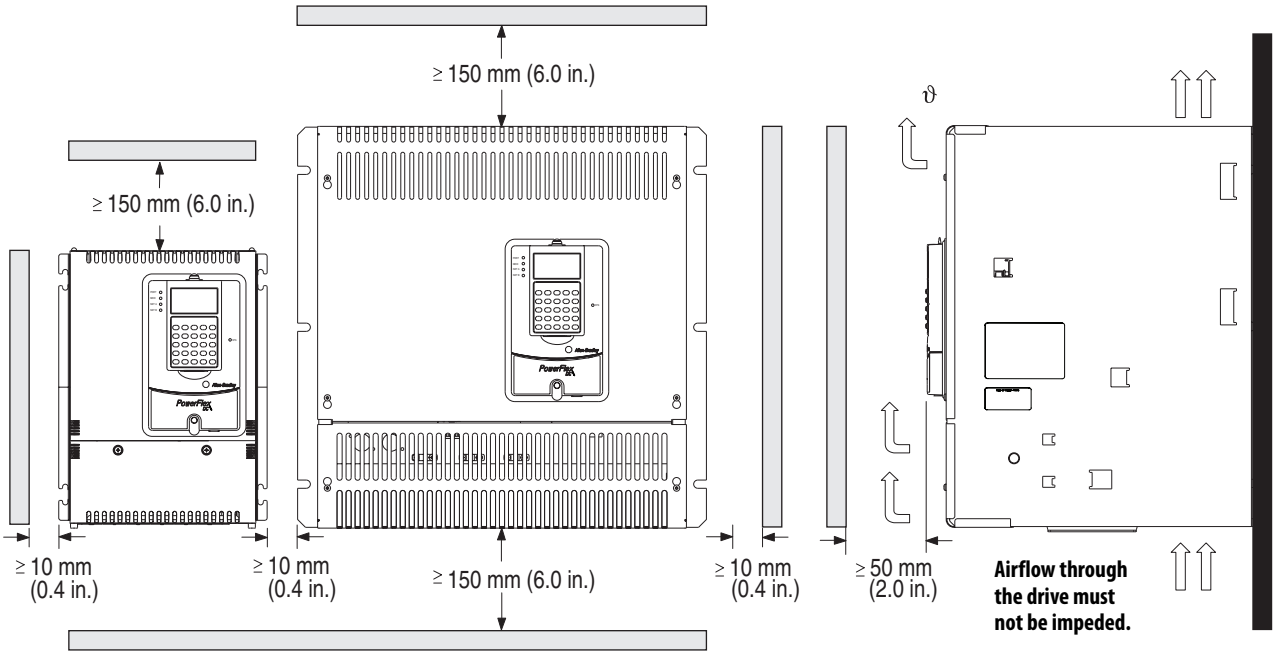

IMPORTANT Verify that all mounting screws are properly tightened before and after operation.

Approximate Dimensions

Frame A Dimensions

A	B	C	A1	A2	B1
mm (in.)	mm (in.)	mm (in.)	mm (in.)	mm (in.)	mm (in.)
267 (10.5)	359 (14.0)	287 (11.3)	7 (0.3)	250 (9.8)	275 (10.8)

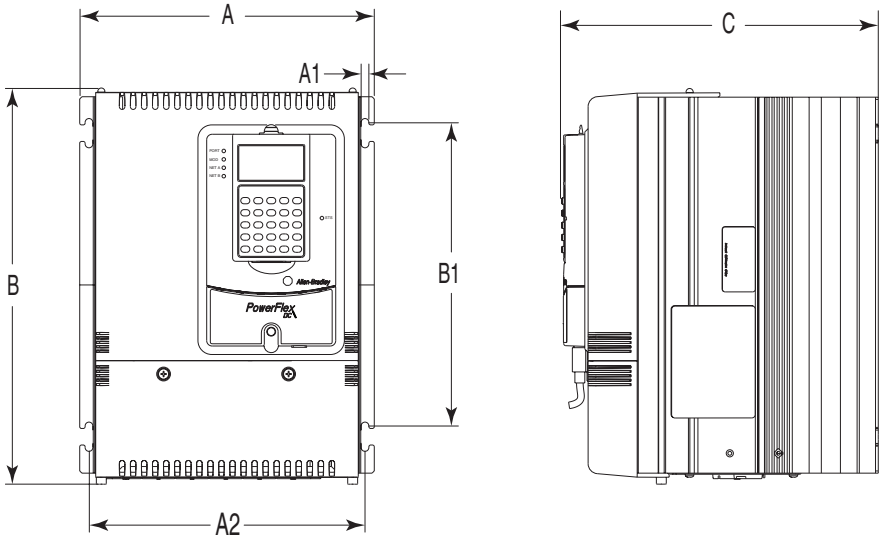

Frame A Weights

Drive w/ND Rating Code		Weight	
		Drive	Drive & Packaging
230V	460V	kg (lb)	kg (lb)
7P0	4P1	8.4 (19.5)	10.5 (23.1)
9P0	6P0		
012	010		
020	014		
–	019		
029	027		
038	035	8.8 (19.4)	11 (24.3)
055	045		
–	052		
073	073	10.8 (23.8)	13 (28.7)
093	086		
110	–		
–	100		
–	129		

Frame B Dimensions

A	A1	A2	A3	B	B1	C
mm (in.)	mm (in.)	mm (in.)	mm (in.)	mm (in.)	mm (in.)	mm (in.)
311 (12.2)	275 (10.8)	16.5 (0.65)	7 (0.3)	388 (15.3)	375 (14.8)	350 (13.8)

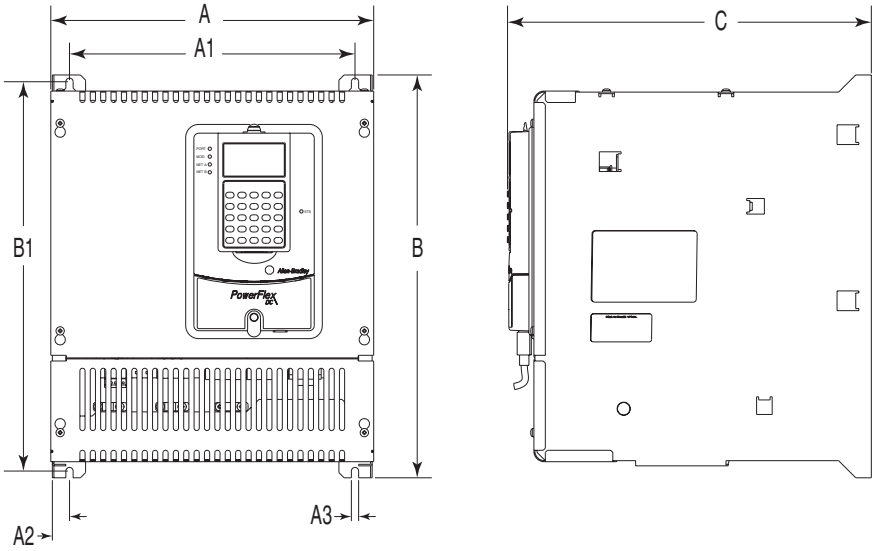

Terminal Details Dimensions in mm (in.)

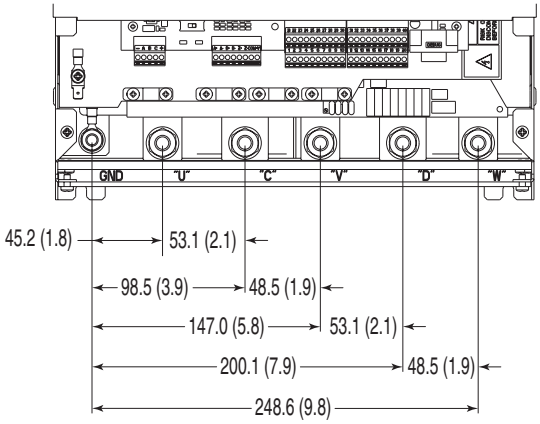

Frame B Weights

Drive w/ND Rating Code			Weight	
			Drive	Drive & Packaging
230V	460V	575V	kg (lb)	kg (lb)
146	167	067	25.5 (56.2)	27.5 (60.6)
180	207	101		
218	–	135		
265	250	270	29.5 (65.0)	31.5 (69.5)
360	330	405	32 (70.5)	34 (75)
434	412	–		

Frame C Dimensions

A	A1	B	B1	B2	B3	B4	B5	C
mm (in.)	mm (in.)	mm (in.)	mm (in.)	mm (in.)	mm (in.)	mm (in.)	mm (in.)	mm (in.)
521 (20.5)	499 (19.7)	511 (20.1)	400 (15.7)	200 (7.9)	55 (2.2)	56 (2.2)	10.5 (0.4)	416 (16.4)

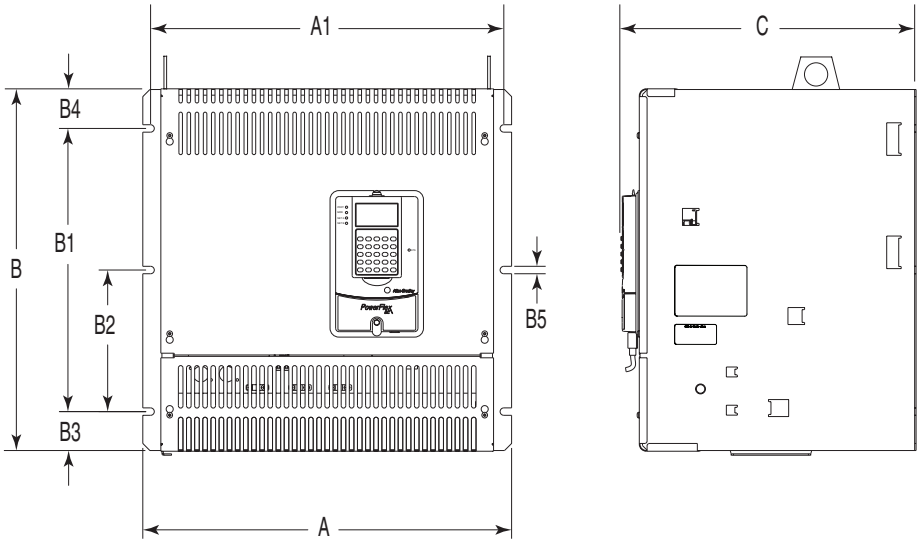

Terminal Details Dimensions in mm (in.)

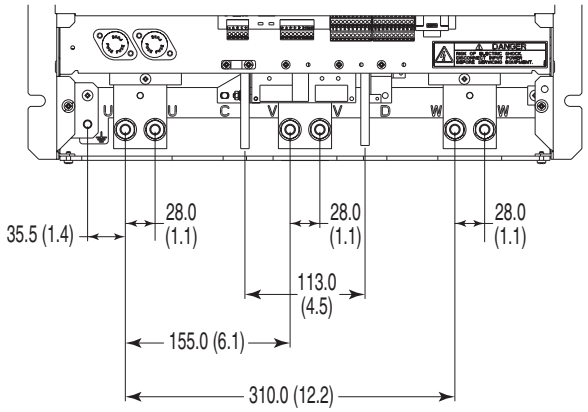

Frame C Weights

Drive w/ND Rating Code				Weight - Regenerative Drives		Weight - Non-regenerative Drives	
				Drive	Drive & Packaging	Drive	Drive & Packaging
230V	460V	575V	690V	kg (lb)	kg (lb)	kg (lb)	kg (lb)
–	495		–	61 (134.5)	83 (183.0)	57 (125.7)	79 (174.2)
521	667		–	65 (143.3)	87 (191.8)	62 (136.7)	84 (185.2)
700	–		–				
–	–	540	452	72 (158.7)	94 (207.2)	68 (150.0)	90 (198.4)
–	–	675	565				

Frame D Dimensions - Right Side and Front Views

Dimensions are shown in mm and (in.)

Dimensions of terminals U, V and W are the same.

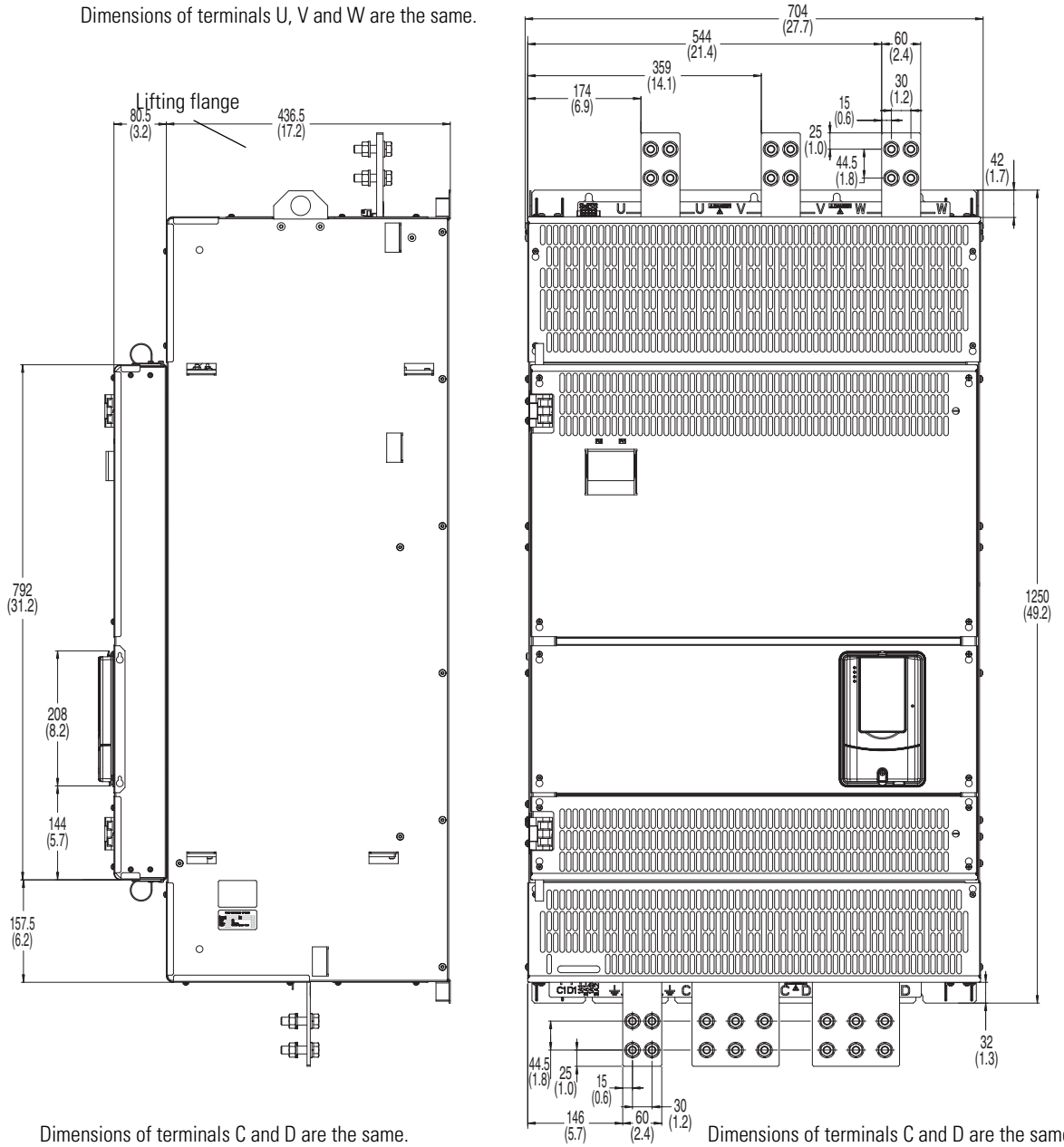

Dimensions of terminals C and D are the same.

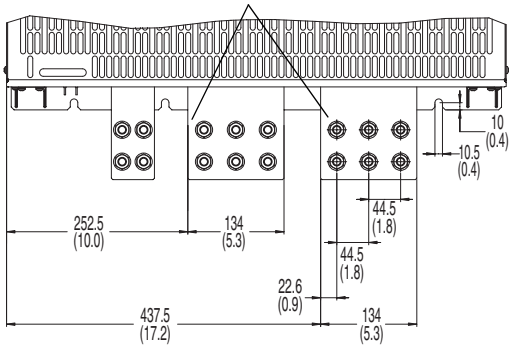

Dimensions of terminals C and D are the same.

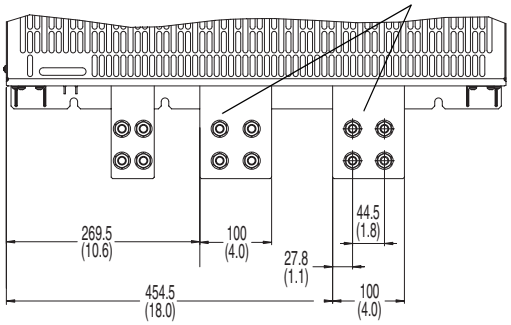

Frame D Dimensions - Left Side and Back Views

Dimensions are shown in mm and (in.)

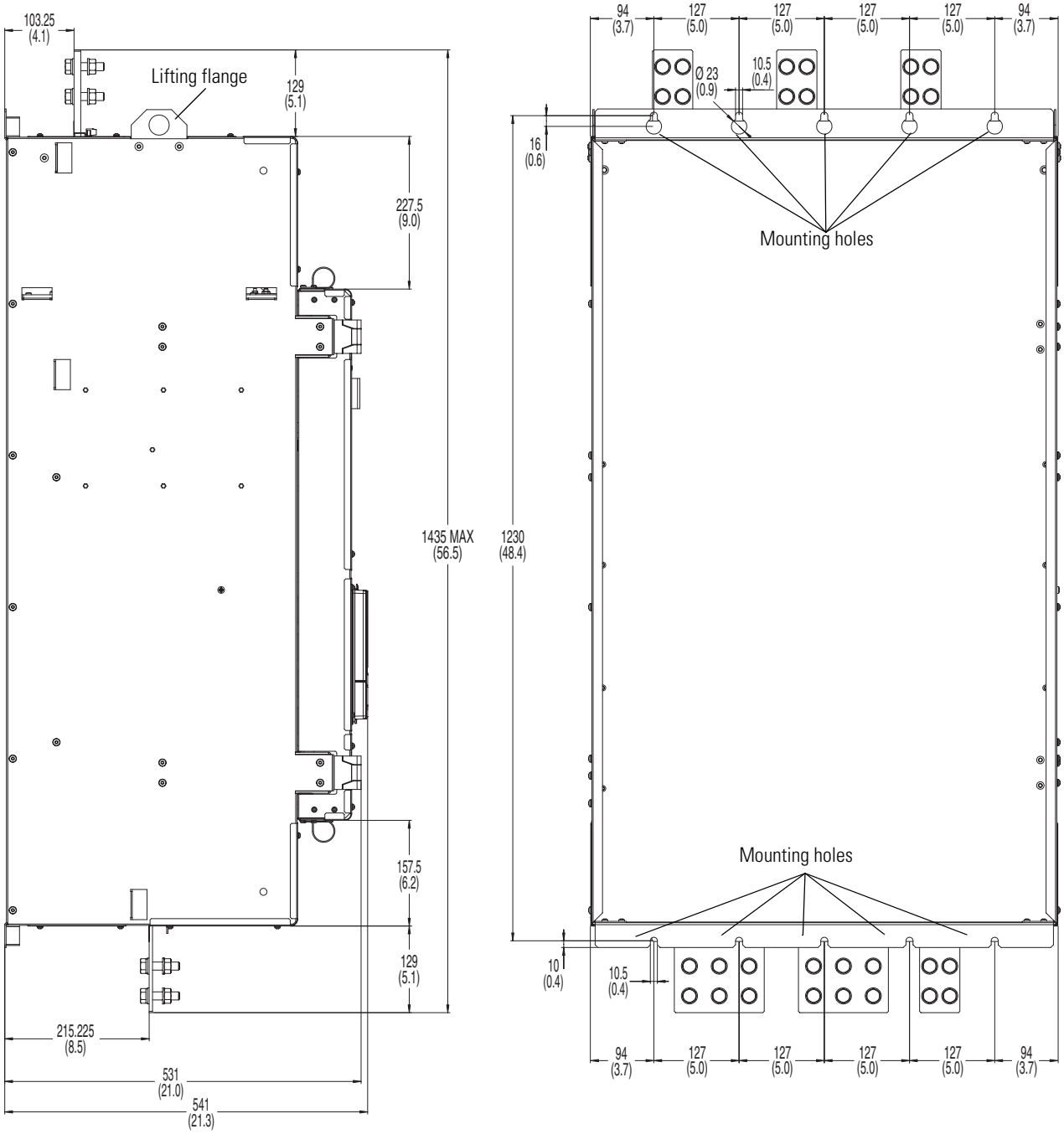

Frame D - 230V AC Input Drive Weights

Drive w/ND Rating Code	Weight - Regenerative Drives		Weight - Non-regenerative Drives	
	Drive	Drive & Packaging	Drive	Drive & Packaging
	kg (lb)	kg (lb)	kg (lb)	kg (lb)
875 1K0	203 (447.5)	281 (619.5)	152 (335.1)	230 (507.1)

Frame D - 460V AC Input Drive Weights

Drive w/ND Rating Code	Weight - Regenerative Drives		Weight - Non-regenerative Drives	
	Drive	Drive & Packaging	Drive	Drive & Packaging
	kg (lb)	kg (lb)	kg (lb)	kg (lb)
830	202 (445.3)	280 (617.3)	152 (335.1)	230 (507.1)
996				
1K1	215 (474.0)	293 (646.0)	165 (363.8)	243 (535.7)
1K3				
1K4				

Frame D - 575V AC Input Drive Weights

Drive w/ND Rating Code	Weight - Regenerative Drives		Weight - Non-regenerative Drives	
	Drive	Drive & Packaging	Drive	Drive & Packaging
	kg (lb)	kg (lb)	kg (lb)	kg (lb)
810	198 (436.5)	276 (608.5)	148 (326.3)	226 (498.2)
1K0				
1K2	215 (474.0)	293 (646.0)	165 (363.8)	243 (535.7)
1K3	222 (489.4)	300 (661.4)	172 (379.2)	250 (551.2)
1K6	241 (531.3)	319 (703.3)	191 (421.1)	269 (593.0)

Frame D - 690V AC Input Drive Weights

Drive w/ND Rating Code	Weight - Regenerative Drives		Weight - Non-regenerative Drives	
	Drive	Drive & Packaging	Drive	Drive & Packaging
	kg (lb)	kg (lb)	kg (lb)	kg (lb)
678	198 (436.5)	276 (608.5)	148 (326.3)	226 (498.2)
791				
904	200 (440.9)	278 (612.9)	150 (330.7)	228 (502.7)
1K0	202 (445.3)	280 (617.3)	152 (335.1)	230 (507.1)
1K1	215 (474.0)	293 (646.0)		
1K2			165 (363.8)	243 (535.7)
1K4	241 (531.3)	319 (703.3)	172 (379.2)	250 (551.2)
1K5			191 (421.1)	269 (593.0)

PowerFlex DC Configured Drives

Overview

The PowerFlex DC Configured Drives allow users to create drive packages based on their specific needs. This program enhances stand-alone drive functionality through additional control, power and packaging options, which are ideal for Original Equipment Manufacturers (OEM) and end users with special installation needs. This program consists of:

•Standard Configured Drives

•Engineer To Order Configured Drives

Standard Configured Drives

The Standard Configured Drives Program allows users to create drive packages based on their specific needs. A complete drive package may be specified by assembling a single catalog number string that includes a base drive and all required options. Packaging is available for 230 and 460V AC requirements in IP20, NEMA/UL Type 1 MCC style enclosures or rigid-panel mounted for installation in an existing enclosure. The program consists of a fully defined catalog string identified within this publication. Focused on higher volume, repeat business, the standard designs provide consistent manufacturing and minimizes customer resources by reducing engineering, manufacturing and installation time. Typical delivery is 6...8 weeks from order entry and can be ordered through the order entry system.

Engineer To Order Configured Drives (ETO)

The Engineer To Order Configured Drives Program offers users the ability to create drive packages beyond the Standard Configured Drives offering. Options may or may not be defined within this publication. Products can be ordered by contacting your Global Drives Systems representative at the central office location or one of the Local Drive Solution Centers. Our engineering experts will assist in defining the specific requirements of your application.

The Standard Configured Drive designs may be modified to meet the design criteria or a complete custom package can be designed for any application. The typical lead time of an ETO order is 8...12 weeks based on the lead time and availability of unique components of the design.

Benefits

- Simplified installation and start-up by use of common options assembled at the factory.
- Drive functionality exceeds options offered with a standard drive.
- Multiple packaging options specific to customer needs.
- Pre-engineered options for easy order entry, consistent manufacturing, high quality and reduced delivery time.
- Selectable configurations to meet application requirements.

Features

- Standard PowerFlex DC Digital drives and drive-related options.
- 6 pulse and 12 pulse.
- Enclosure options: IP20 MCC, IP42 Filter, IP00 (mounted on a panel), either conformal coated circuit boards or without.
- Pre-engineered options.
- Custom/engineered solutions.
- UL panel recognition from the factory for pre-engineered options.

Factory Installed Options

Enclosure Options

The PowerFlex Configured DC drives can be ordered in a IP20, NEMA/UL Type 1 MCC style enclosure or a IP43, NEMA/UL Type 1 with Fan & Filter MCC style enclosure. For both of these enclosures the drive, incoming disconnect and any specified operator devices will be mounted and wired in the cabinet or on the door as required. If a cabinet mounted input line reactor is specified, it will be mounted in the cabinet for drives ratings of 200 Hp or less. The drive may also be ordered on a rigid panel for installation in a users existing cabinet. For these designs the drive and all panel mounted parts will be mounted and wired. The incoming disconnect, operator devices and input line reactor will be shipped loose for customer mounting and wiring per local codes.

All MCC cabinets are 2286 mm H x 635 mm D (90 in. H x 25 in. D) with the width determined by the size of the drive and the options requested. The standard width enclosures are 508, 635, 889 mm (20, 25 and 35 in.) wide. The rigid panel mount designs are shipped on a 1981 mm H x 508 mm W or 813 mm W (78 in. H x 20 in. W or 32 in. W) panel to fit a standard 610 mm W X 914 mm W (24 in. W or 36 in. W) enclosure.

Human Interface Module (HIM) Options

The PowerFlex Configured DC drives can be ordered with a variety of HIM modules to meet the needs of each drive. The HIM's are installed on the door of the enclosures or shipped loose on the Open Panel designs. All designs have the door mounted bezel and interconnect cable to the drive. HIM's can be installed or updated in the field.

No HIM (Blank Plate)
Catalog Code: 0

LCD Display, Full
Numeric Keypad
Catalog Code: C

LCD Display,
Programmer Only
Catalog Code: E

I/O Options

The PowerFlex Configured DC drive has built-in configurable digital and analog I/O. The digital I/O is 24V DC and the analog I/O can be configured for voltage or current operation. Additional 24V DC and analog I/O can be added or an I/O conversion card can be added to accommodate 115V AC digital I/O.

I/O Options	
Control	Code
I/O Expansion Card (4 Additional 24V dc Digital Inputs & Outputs, 2 Analog Outputs)	A
115V ac Conversion Card (8 Digital Inputs & Outputs)	B
8 - 24V - dc Digital Inputs & Outputs, 3 Analog Outputs and 2 Analog Inputs	N

Communication Options

The PowerFlex Configured DC drives are fully compatible with Allen-Bradley drive's wide variety of DPI communication adapters, offering the following options.

Description	Catalog No.
ControlNet™ Communication Adapter (Coax)	C
DeviceNet™ Communication Adapter	D
EtherNet/IP™ Communication Adapter	E
Interbus™ Communication Adapter	I
LonWorks™ Communication Adapter	L
PROFIBUS™ DP Communication Adapter	P
ControlNet™ Communication Adapter (Fiber)	Q
Remote I/O Communication Adapter	R
None	N

Cabinet Options

The Configured Drive enclosure can be equipped with a variety of standard user option. These options are predefined as described below. Other options can be ordered through the ETO program.

Description	Catalog No.
None	N
Start and Stop PB's	1
Local/Remote SS	2
E-Stop PB	3
Jog	4
Blower Motor Starter	5
Options 1 & 2	A
Options 1 & 3	B
Options 1 & 4	C
Options 1 - 3	D
Options 1 - 4	E
Options 1 - 5	F
Options A & 4	G
Options A & 5	H
Options B & 4	J
Options B & 5	K

Certifications

The PowerFlex DC Drive is a UL/cUL certified product. The Configured Drive enclosure can also be built to UL/cUL certification and to CSA certification.

Description	Code
None (Drive unit is UL/cUL	N
UL/cUL	1
CSA Inspection & certification	2

Please contact your local distributor or sales office for product availability. Configured Drives offers Quick Ship and Pre-Engineered Programs.

Configured Drive Enclosure Dimensions

Frame 1

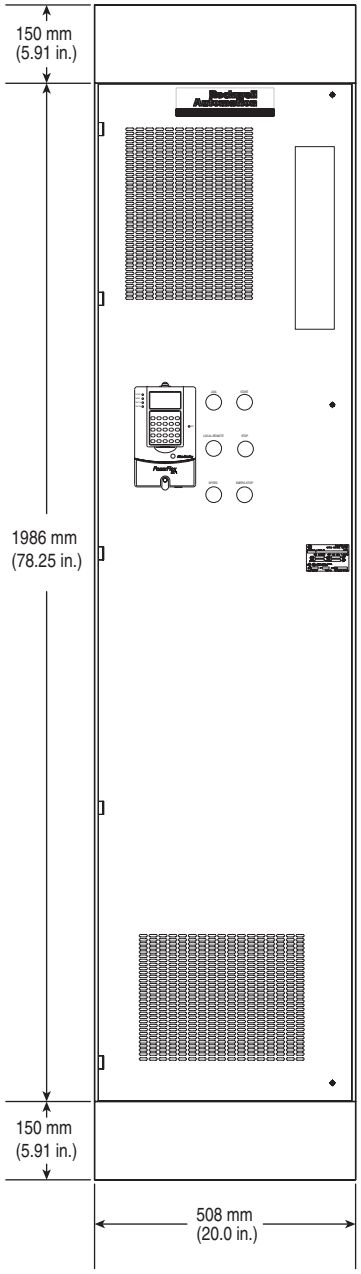

Frame 2

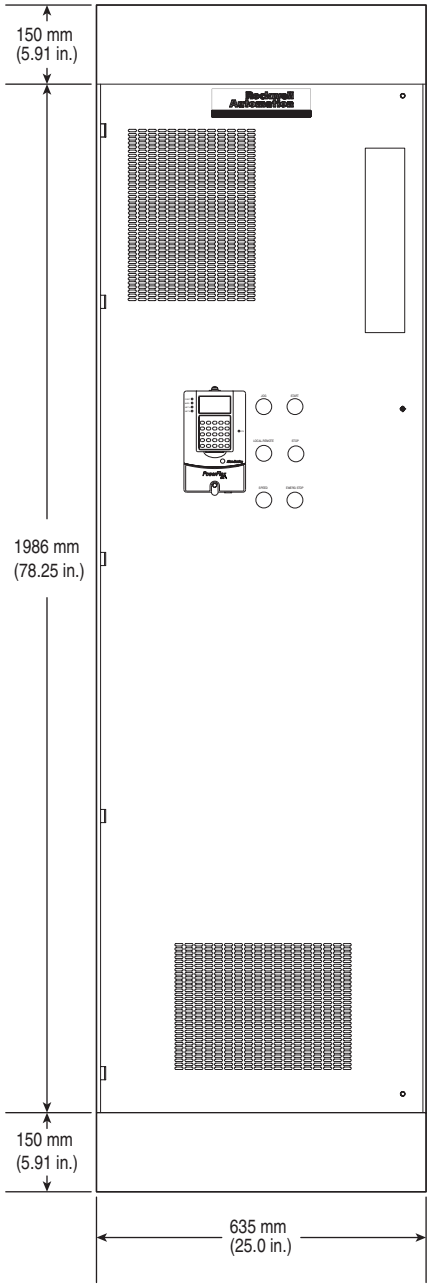

Configured Drive Enclosure Dimensions, continued

Frame 3

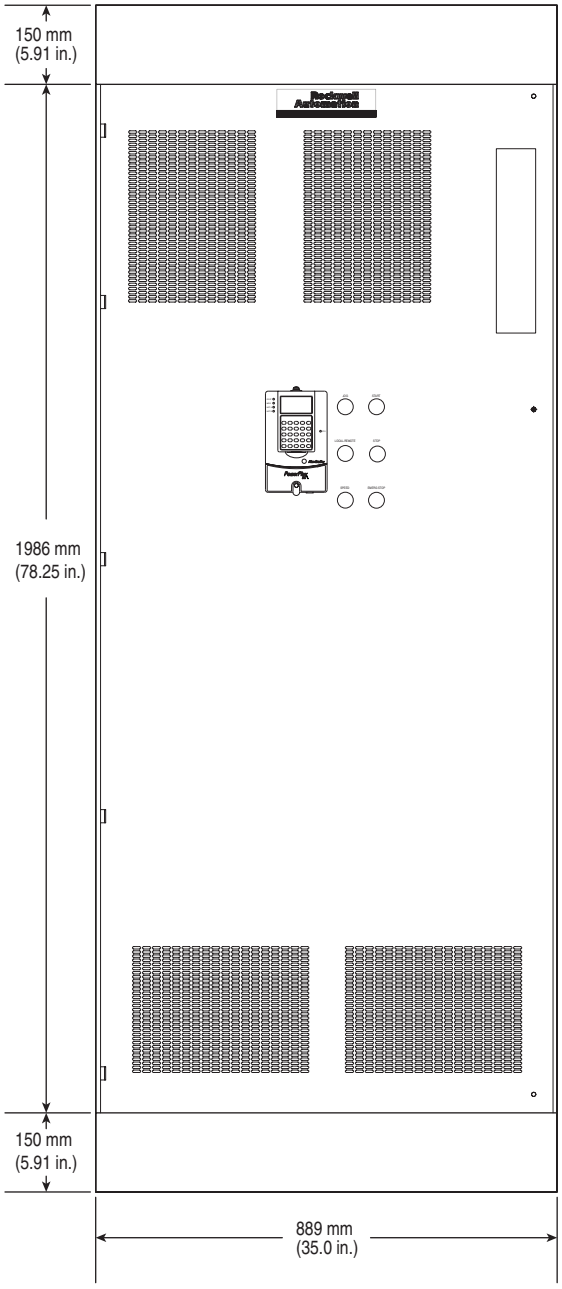

Specifications

Category	Specification	
Agency Certification	c UL us	According to file E59272 for the series of the approved devices.
	CE	In conformity with the following European Directives: EMC Directive (2004/108/EC) Low Voltage Directive (2006/95/EC) Standards applied: EN 50178: 1997 EN 61800-3: 2004
		Australian Communications and Media Authority In conformity with the following: Radio communications Act: 1992 Radio communications Standard: 2008 Radio communications Labelling Notice: 2008 Standards applied: EN 61800-3:2004
	The drive is also designed to meet the following specifications: NFPA 70 - US National Electrical Code	

Category	Specification	
Drive Type	Full Wave Regen, 6 Pulse, Regulated Field Supply	
Protection	Heat Sink Thermistor:	Monitored by microprocessor overtemp trip
	Drive Overcurrent Trip Software Overcurrent Trip: Hardware Overcurrent Trip:	 200% of rated current (typical) 220-300% of rated current (dependent on drive rating)
	Line transients:	Up to 2000 volts peak per IEC 6100-4-5
	Control Logic Noise Immunity:	Showering arc transients up to 1500V peak
	Power Ride-Thru:	15 milliseconds at full load
	Logic Control Ride-Thru:	0.5 seconds minimum, 2 seconds typical
	Ground Fault Trip:	Phase-to-ground on drive output
	Short Circuit Trip:	Phase-to-phase on drive output
Environment(1)	Altitude:	1000 m (3300 ft) max. without derating. De-rate output power by 1.2% for every 100 meters (328ft) above 1000 meters (3300ft).
	Maximum Surrounding Air Temperature IP20, NEMA Type Open:	0…50° C (32…122° F), typical. De-rate 1.25% for every 1° C over 50° C (122° F), to 55° C (131° F). Additional cooling is required for temps. above 55° C.
	Storage Temp. (all const.):	–25 to 55 degrees C (–13 to 131 degrees F)
	Atmosphere:	**Important:** Drive **must not** be installed in an area where the ambient atmosphere contains volatile or corrosive gas, vapors or dust. If the drive is not going to be installed for a period of time, it must be stored in an area where it will not be exposed to a corrosive atmosphere.
	Relative Humidity:	Operating: 5 to 85% non-condensing Storage: 5 - 95% non-condensing
	Shock:	15G peak for 11ms duration (±1.0 ms)
	Vibration:	0.152 mm (0.006 in.) displacement, 1G peak

(1) PowerFlex DC drives must be installed in a Pollution Degree 2 environment.

Category	Specification		
Drive Type	Full Wave Regen, 6 Pulse, Regulated Field Supply		
Electrical	Input Voltages:	230 to 690V AC +/- 10%, 3 Phase (See AC Input Voltages on page 20 for details.)	
	Input Frequency:	50/60 Hz +/- 5%	
	Max. Rate of Change of Input Frequency:	2 Hz/Sec.	
	Armature Output Voltage:	Two Quadrant Drives	Four Quadrant Drives
		260V DC @ 230V AC	240V DC @ 230V AC
		470V DC @ 400V AC	420V DC @ 400V AC
		530V DC @ 440V AC	460V DC @ 440V AC
		560V DC @ 460V AC	480V DC @ 460V AC
		580V DC @ 480V AC	500V DC @ 480V AC
		680V DC @ 575V AC	600V DC @ 575V AC
		810V DC @ 690V AC	720V DC @ 690V AC
	Output Horsepower (Cont.)	1.5…300 HP @ 230V AC 2…900 HP @ 460V AC 600…1250 HP @ 575V AC 600…1400 HP @ 690V AC	
	Output Current:	4.1…1688A	
	Overload Capability:	100% rated continuous current 150% rated current for one minute then fault 200% rated current for three seconds then fault	
	Field Output Voltage	200V DC @ 230V AC 310V DC @ 400V AC 360V DC @ 460V AC Maximum field output voltage is 0.85 x AC input line voltage.	
	Controller Current Overload:	150% rated current for one minute 200% rated current for three seconds	
	Max. Short Circuit Rating:	100,000 A	
Control	Speed Regulation:*	All operating modes: Max. speed: 8000 rpm Digital reference resolution: 0.25 rpm Analog reference resolution: ≥ 0.25 rpm	
		with Digital Incremental Encoder/Resolver Speed feedback resolution better than 0.5 rpm (based on encoder PPR or resolver resolution) Operating range better than 1000:1 rpm, bi-directional Performance Accuracy ±0.02% typical 170 rad/sec bandwidth	
		with DC Analog Tachometer Speed feedback resolution better than 2000:1 rpm Operating range better than 1000:1 rpm, bi-directional Performance accuracy ±0.1% 170 rad/sec bandwidth	
		with Armature Voltage Feedback Voltage feedback resolution better than 2000:1 rpm Operating range better than 100:1 rpm, bi-directional Performance accuracy: ±2.0% typical 80 rad/sec bandwidth	
		*Subject to motor specs. and current loop tuning.	
	Torque Regulation	Current feedback resolution better than 2000:1	
		Performance accuracy: 1.0% typical	
		500 rad/sec bandwidth	

Category	Specification	
Feedback Devices	Encoder	Type: Incremental, dual channel, two channel optional (with jumper), differential (recommended) or single-ended
		Input Voltage: Configurable for +2.5V - 5.2V (switch S21 in ENC_5 position) or +5.4V - 15.2V (switch S21 in ENC_12 position)
		Input Current: 4.5 mA / 6.8 - 10.9 mA each channel
		Quadrature: 90° ± 27° @ 25° C
		Duty cycle: 50% ± 10% Source/Sink capable
		Pulses Per Revolution: 100 to 32770
		Maximum Frequency: 150 kHz
		Maximum Cable Length: Shielded, 150m (0.75 mm^2), 125m (0.5 mm^2), 55m (0.22 mm^2)
	DC Analog Tachometer	Input Voltage: 22.7, 45.4, 90.7, 181.6, & 302.9V max.
		Input Current: 8 mA full scale
		Maximum Cable Length: Shielded, depends on the installation, typical 150m.
Inputs	Analog Inputs	Three configurable, isolated, differential
		±10V, 0-10V, 0-20mA or 4-20mA.
		Resolution: 11 Bit + sign
	Digital Inputs	Eight standard configurable, four additional configurable with the I/O Expansion circuit board.
		Max Voltage +30V DC input, 200mA (total current draw is the sum of encoder power, digital outputs and any other loads connected to terminal 19)
Outputs	Analog Outputs	Two standard configurable, two additional configurable with the I/O Expansion circuit board. Sampling rate 2 ms.
		± 10V, 5mA, bipolar (current is not bipolar)
		Resolution: 11 Bit + sign
	Digital Outputs	Four standard configurable, four additional configurable with the I/O Expansion circuit board.
		+ 30V, 50mA
	Relay Outputs	Two configurable, N.O. contacts
		Max. 250V AC, 1A AC1

Watts Loss and Fan Attributes

Watts loss and fan attributes data shown below is based on the rated current of the drive.

Frame A Drives

Drive Current Rating Code(1)		Total Watts Loss	Total Value for Fan (none or 1)		
@ 230 VAC	@ 460 VAC		AC Input Voltage	Rated Current (A)	Max. Air Flow Noise Level
7P0	4P1	131	(no fan)		
9P0	6P0				
012	010				
020	014				
–	019				
029	027	186			
038	035	254	(Internal power supply)		80 m^3/h 37 dB(A)
055	045				
–	052				
073	073	408			160 m^3/h 45 dB(A)
093	086	476			
110	–				
–	100	553			
–	129				

(1) Refer to Catalog Number Explanation on page 5, positions 8…10 for corresponding drive Hp rating, armature amp rating and field amp rating.

Frame B Drives

Drive			Total Value for All Fans (2)		
Current Rating Code(1)	AC Input Voltage	Total Watts Loss	AC Input Voltage	Rated Current	Max. Air Flow Noise Level
146	230	781	(Internal power supply)		320 m^3/h 48 dB(A)
180					
218		939			
265		1038			
360		1693			680 m^3/h 53 dB(A)
434					
167	460	781			320 m^3/h 48 dB(A)
207		939			
250		1038			
330		1248			
412		1693			680 m^3/h 53 dB(A)
067	575	400			320 m^3/h 48 dB(A)
101		553			
135		700			
270		1038			
405		1693			680 m^3/h 53 dB(A)

(1) Refer to Catalog Number Explanation on page 5, positions 8…10 for corresponding drive Hp rating, armature amp rating and field amp rating.

Frame C Drives

Drive			Total Value for All Fans (3) (2)		
Current Rating Code(1)	AC Input Voltage	Total Watts Loss	AC Input Voltage	Rated Current	Max. Air Flow Noise Level
521	230	2143	230 VAC	0.75 Amps	1050 m^3/h 62.5 dB(A)
700		2700			
495	460	2143			
667		2590			
540	575	2300			
675		2620			
452	690	1700			
565		2300			

(1) Refer to Catalog Number Explanation on page 5, positions 8…10 for corresponding drive Hp rating, armature amp rating and field amp rating.

(2) Fans on frames C drives must be powered by an external 230 V AC, 50/60 Hz power supply, connected to terminals U3 and V3.

Frame D Drives

Drive			Total Value for Fan (1) (2)		
Current Rating Code(1)	AC Input Voltage	Total Watts Loss	AC Input Voltage	Rated Current	Max. Air Flow Noise Level
875	230	2694	230 VAC	2.4A@50Hz and 3.3A@60Hz	2400 m^3/h 80 dB(A)
1K0		3284			
830	480	3200			
996		3568			
1K1		4189			
1K3		5229			
1K4		5117			
810	575	3122			
1K0		3819			
1K2		4679			
1K3		4879			
1K6		5720			
678	690	3174			
791		3582			
904		4028			
1K0		4064			
1K1		4509			
1K2		5368			
1K4		5543			
1K5		5886			

(1) Refer to Catalog Number Explanation on page 5, positions 8…10 for corresponding drive Hp rating, armature amp rating and field amp rating.

(2) Fans on frames D drives must be powered by an external 230 V AC, 50/60 Hz power supply, connected to terminals U3 and V3.

PowerFlex DC Stand-Alone Regulator

Catalog Number (1)	Total Watts Loss [W]	Total Value for Fans (2)		
		AC Input Voltage	Rated Current	Max. Air Flow Noise Level
23PMD4	303	(Internal power supply)		160 m^3/h 40 dB(A)
23PMD7	357			
23PMF4	374			
23PMF7	428			

(1) Refer to Stand-Alone Regulator "Catalog Numbers" in the PowerFlex DC Stand-Alone Regulator and Gate Amplifier User Manual, publication 23P-UM001, for a description of ratings.

Important User Information

Solid-state equipment has operational characteristics differing from those of electromechanical equipment. Safety Guidelines for the Application, Installation and Maintenance of Solid State Controls (publication SGI-1.1 available from your local Rockwell Automation sales office or online at http://www.rockwellautomation.com/literature/) describes some important differences between solid-state equipment and hard-wired electromechanical devices. Because of this difference, and also because of the wide variety of uses for solid-state equipment, all persons responsible for applying this equipment must satisfy themselves that each intended application of this equipment is acceptable.

In no event will Rockwell Automation, Inc. be responsible or liable for indirect or consequential damages resulting from the use or application of this equipment.

The examples and diagrams in this publication are included solely for illustrative purposes. Because of the many variables and requirements associated with any particular installation, Rockwell Automation, Inc. cannot assume responsibility or liability for actual use based on the examples and diagrams.

No patent liability is assumed by Rockwell Automation, Inc. with respect to use of information, circuits, equipment, or software described in this manual.

Reproduction of the contents of this manual, in whole or in part, without written permission of Rockwell Automation, Inc., is prohibited.

Documentation Feedback

Your comments will help us serve your documentation needs better. If you have any suggestions on how to improve this document, complete this form, publication RA-DU002, available at http://www.rockwellautomation.com/literature/.

Allen-Bradley, Rockwell Software, Rockwell Automation, and TechConnect are trademarks of Rockwell Automation, Inc.

Trademarks not belonging to Rockwell Automation are property of their respective companies.

www.rockwellautomation.com

Power, Control and Information Solutions Headquarters

Americas: Rockwell Automation, 1201 South Second Street, Milwaukee, WI 53204-2496 USA, Tel: (1) 414.382.2000, Fax: (1) 414.382.4444
Europe/Middle East/Africa: Rockwell Automation NV, Pegasus Park, De Kleetlaan 12a, 1831 Diegem, Belgium, Tel: (32) 2 663 0600, Fax: (32) 2 663 0640
Asia Pacific: Rockwell Automation, Level 14, Core F, Cyberport 3, 100 Cyberport Road, Hong Kong, Tel: (852) 2887 4788, Fax: (852) 2508 1846

Publication 20P-TD001E-EN-P - January 2012
Supersedes Publication Supersedes Publication 20P-TD001D-EN-P - January 2010

Copyright © 2012 Rockwell Automation, Inc. All rights reserved. Printed in the U.S.A.

Fliteway Technologies, Inc.

Operations and Maintenance Manual

Q14617R3

Techsas, Inc.

Kirtland AFB

2129 E. Birchwood Avenue, Cudahy, WI 53110

(414) 483-5600 (800) 236-3580 Fax: (414) 483-1957

Q14617R3
TECHSAS, Inc.
Kirtland AFB

Index

Section 1 – Equipment Specifications
- Quote
- Serial Numbers
- Bill of Materials
- Warranty

Section 2 – Engineering Drawings
- Feed Pump Skid Layout and P&ID
- Treated Water Pump Skid Layout and P&ID
- Ladder Diagram
- One Line Electrical Diagram

Section 3 – Test Data
- Provided at completion

Section 4 – Instrumentation for Groundwater Treatment Feed Tank
- Equipment specifications

Section 5 – Instrumentation for Treated Water Storage Tank
- Equipment specifications – See Groundwater Treatment Feed Tank Section

Section 6– Feed Pump Skid
- Feed Pump Skid Layout and P&ID
- Equipment specifications

Section 7 – Feed Pump VFD – Control Panel
- Ladder Diagram
- One Line Electrical Diagram
- Equipment specifications

Section 8 – Treated Water Pump Skid
- Treated Water Pump Skid Layout and P&ID
- Equipment specifications – See Feed Pump Skid Section

Section 9 – Treated Water Pump VFD- Control Panel
- Ladder Diagram
- One Line Electrical Diagram
- Equipment specifications – See Feed Pump VFD – Control Panel section

Fliteway Technologies, Inc.
2129 East Birchwood Ave.• Cudahy, WI 53110
(414) 483-5600 • 1-800-236-3580 • FAX (414) 483-1957

Q14617R3

TECHSAS, Inc.

Equipment Skids for Kirtland AFB Project

- **Instrumentation for the 6,000 Gallon Groundwater Treatment Feed Tank (Tank supplied by others)**
  - One (1) Rosemount 3051L Liquid Level Indicating Transmitter
  - Two (2) Flotect 304SS Liquid level switches

- **Instrumentation for the 6,000 Gallon Treated Water Storage Tank (Tank supplied by others)**
  - One (1) Rosemount 3051L Liquid Level Indicating Transmitter
  - Two (2) Flotect 304SS Liquid level switches

- **One (1) Feed Pump Skid**

  - Steel Base Skid (approximately 6' by 10') with Forklift pockets and Bolt down Tabs

  - Two (2) Gould ANSI Centrifugal Pumps (P-212A P-212B)
    - Gould ANSI Model 3196 STi 2x3-6 with 15 HP TEFC Motors (Inverter Rated) each rated for 200 GPM at 100 TDH
    - Each with ITT Smart Temperature/Vibration /Run Time Monitor and Alert
      Note: Pumps require in-field final shaft alignments and coupling installation after piped to system.
    - Pumps plumbed in Parallel with 4" Steel piping with Valves and Expansion joints
      - Ashcroft Pressure Gauge [P/N 45-1259-SL-04L-60-#] (PI-3102) and Sample port
    - Two (2) Silent Globe Valves

  - Two (2) VFD's installed in NEMA4 (High Voltage) Enclosure mounted and wired on Feed Pump Skid
    - UL508 Listed
    - One (1) 36" by 36" NEMA 4 Weigmann Enclosure and vent fan
    - Two (2) 20HP Allen-Bradley VFD's [20BD027A0AYNAND0] (SIC-3102A SIC-3102B)
      - Each with HIM Module / Remote Display [20HIMC3S] and Ether/IP COMM card [20-COMM-ER]
    - Two (2) 5% Line Reactors [1321-3R35-C]
    - Square D Heavy Duty NEMA 3R Disconnect Switch (H363NRB) fused at 100 Amps

  - Two (2) each ISC Model LR6304FAC15 Multi-Round Liquid Bag Filter Housings (F-212A/B) each with:
    - Carbon Steel housing (holds six (6) #2 size 7" by 32" Filter Bags
    - Each Rated for 1,200 GPM with 26.4 sq. ft. filtering area

- 4” Flanged Inlet / Discharge Ports
- 1” NPT drain
- Buna N Seals on lid and baskets, differential, drain, and vent ports
- Two part epoxy finish
- Davit cover lift
- Heavy Duty Legs
- HH Pressure Switch with weather cover [Dwyer A1F-PC-SS-1-2] (PSHH-3102)
- Two (2) Differential Pressure Indicators [45-1130SL-25-S-30#] across the bag filters (PDI-3102A/B)
- Bag Filters plumbed in parallel with 4” Steel piping with valves

- One (1) NEMA 4 Junction Box (Low Voltage) prewired with terminal strips to facilitate wiring to System Control Panels
- Factory Functional and Pressure Tested

- **One (1) Treated Water Pump Skid**

- Steel Base Skid (approximately 6’ by 10’) with Forklift pockets and Bolt down Tabs

- One (1) Gould ANSI Centrifugal Pump (P-218)
  - Gould ANSI Model 3196 MTi 3x4-10H with 20 HP TEFC Motor (Inverter Rated)
  - With ITT Smart Temperature/Vibration /Run Time Monitor and Alert
    Note: Pump requires in-field final shaft alignments and coupling installation after piped to system.
  - Pump plumbed with 4” Steel piping with Valves and Expansion joints
  - Ashcroft Pressure Gauge [P/N 45-1259SL-04L-100#] (PI-3108) and Sample port
  - Two (2) Silent Globe Valves

- One (1) VFD Installed in NEMA4 (High Voltage) Enclosure mounted and wired on Treated Water Pump Skid
  - UL508 Listed
  - One (1) 36” by 36” NEMA 4 Weigmann Enclosure and vent fan
  - One (1) 25HP Allen-Bradley VFD [20BD034A0AYNAND0] (SIC-3108)
    - With HIM Module / Remote Display [20HIMC3S] and Ether/IP COMM card [20-COMM-ER]
  - One (1) 5% Line Reactor [1321-3R35-C]
  - Square D Heavy Duty NEMA 3R Disconnect Switch (H363NRB) fused at 100 Amps

- Two (2) each ISC Model LR6304FAC15 Multi-Round Liquid Bag Filter Housings (F-218 A/B) each with:
  - Carbon Steel housing (holds six (6) #2 size 7” by 32” Filter Bags
  - Each Rated for 1,200 GPM with 26.4 sq. ft. filtering area
  - 4” Flanged Inlet / Discharge Ports
  - 1” NPT drain
  - Buna N Seals on lid and baskets, differential, drain, and vent ports
  - Two part epoxy finish
  - Davit cover lift
  - Heavy Duty Legs

- HH Pressure Switch with weather cover [Dwyer A1F-PC-SS-1-2] (PSHH-3108)
- Two (2) Differential Pressure indicators [45-1130SL-25-S-30#] across the bag filters (PDI-3108A/B)
- Bag Filters plumbed in parallel with 4" Steel piping with valves

- One (1) NEMA 4 Junction Box (Low Voltage) prewired with terminal strips to facilitate wiring to System Control Panel.
- Factory Functional and Pressure Tested

- **O&M Supplies**
  - One (1) Box of 50 #2 Size 10 Micron Bags for Bag Filters

- **Four (4) Day On-Site Installation Assistance by Fliteway (Includes travel time and expenses)**

- **Four (4) Day On-Site Startup Assistance by Fliteway with final pump alignment by local pump service company (Includes travel time and expenses)**

Freight to Kirtland AFB, NM (partial load flat bed)

Q14508R5 -CB&I

ITEM	MANUFACTURER	MODEL	FLITEWAY ASSIGNED SERIAL NUMBER	MANUFACTURER ASSIGNED SERIAL NUMBER
GROUNDWATER TREATMENT FEED TANK				
ROSEMOUNT TRANSMITTER	ROSEMOUNT	3051L2AG0MD21AJ	N/A	2493096
FEED PUMP SKID				
GOULDS CENTRIFUGAL PUMPS #1	GOULDS	3196 MTI 2X3-6	N/A	N723H146-1
PUMP MOTOR #1 -	BALDOR	09P011Z602	N/A	Z1407180103
GOULDS CENTRIFUGAL PUMPS #2	GOULDS	3196 MTI 2X3-6	N/A	N723H146-2
PUMP MOTOR #2 -	BALDOR	09P011Z602	N/A	Z1407180148
McCROMETER FLOW METER	McCROMETER	VM04QE03F-E1HS-V3	N/A	15-1023
TREATED WATER STORAGE TANK				
ROSEMOUNT TRANSMITTER	ROSEMOUNT	3051L2AG0MD21AJ	N/A	2493097
TREATMENT WATER PUMP SKID				
GOULDS CENTRIFUGAL PUMPS	GOULDS	3196 MTI 3X4-8G	N/A	N723H145
PUMP MOTOR	BALDOR	12H0114292G1	N/A	C1501290072
McCROMETER FLOW METER	McCROMETER	VM04QE03F-E1HS-V3	N/A	15-1022
MATTEI AIR COMPRESSOR	MATTEI	AC-15 LX	N/A	EZVPGF-2014

Q14617 TECHSAS - KIRTLAND AFB

ITEM	MANUFACTURER	MODEL	FLITEWAY ASSIGNED SERIAL NUMBER	MANUFACTURER ASSIGNED SERIAL NUMBER
INSTRUMENTATION GROUNDWATER TREATMENT FEED TANK				
ROSEMOUNT TRANSMITTER	ROSEMOUNT	3051L2AG0MD21AJ	N/A	2508565
INSTRUMENTATION TREATED WATER STORAGE TANK				
ROSEMOUNT TRANSMITTER	ROSEMOUNT	3051L2AG0MD21AJ	N/A	2508628
FEED PUMP SKID				
GOULDS CENTRIFUGAL PUMPS #1	GOULDS	3196 MTI 2X3-6	N/A	N728H638
PUMP MOTOR #1 - 15 HP	WEG	01536ET3E254T-W22	N/A	25AG02015 1029522237
GOULDS CENTRIFUGAL PUMPS #2	GOULDS	3196 MTI 2X3-6	N/A	N728H637
PUMP MOTOR #2 - 15 HP	BALDOR	EM2394T	N/A	Z1504140319
TREATMENT WATER PUMP SKID				
GOULDS CENTRIFUGAL PUMPS	GOULDS	3196 MTI 3X4-10H	N/A	732H837
PUMP MOTOR - 20 HP	BALDOR	EM2334T	N/A	Z1605200807

Q14617 TECHSAS / KIRTLAND AFB

	MAKE	MODEL	HP	AMPS	RPM	VOLTS	SERIAL #	PHASE	HZ
FEED PUMP #1									
CENTRIFUGAL PUMP	GOULDS	3196 Mti 2X3-6	N/A	N/A	N/A	N/A	N728H638	N/A	N/A
CENTRIFUGAL PUMP - 15 HP	WEG	01536ET3E254T-W22	15	17.2	3530	460	25AG02015 1029522237	3	60
FEED PUMP #2									
CENTRIFUGAL PUMP	GOULDS	3196 Mti 2X3-6	N/A	N/A	N/A	N/A	N728H637	N/A	N/A
CENTRIFUGAL PUMP - 15 HP	BALDOR	EM2394T	15	17.5	3520	460	Z1504140319	3	60

Warehouse 18 *** INDENTED B.O.M. REPORT *** Batch Qty. 1
From WTQ14617 FEED to WTQ14617 FEED Scrap/Yield OFF

Level	Seq	Stock Code	Description	Category Code/Description	Scrap/ Yield %	Inst.	Lead Time	U/M	Usage Qty.
**Top Assembly*		18-WTQ14617 FEED	FEED PUMP SKID TECHSAS, KIRTLA	04 Distributed Goods	100.00	N			
1	001	00-FM-VM040 CANCEL	McCROMETER CANCEL FEE 4" FLOW	01 Soil Remediation		N		EA	1.000
1	002	00-ST-T2X2X.25	TUBE, 2 X 2 X .25	01 Soil Remediation		N		FT	40.000
1	003	00-ST-C7X12.25	CHANNEL, 7" X 12.25	01 Soil Remediation		N		FT	40.000
1	004	00-ST-72X120X3/16	DIAMOND PLATE 72 X 120 X 3/16"	01 Soil Remediation		N		IN	120.000
1	005	00-ST-RT4X2X.25	STEEL,RECT TUBING, 4X2X1/4	01 Soil Remediation		N		FT	20.000
1	006	00-ST-SQT1.5X1/4	SQUARE TUBE 1-1/2 X 1-1/2 X 1/	01 Soil Remediation		N		FT	15.000
1	007	00-ST-SQT2X2X1/4	SQUARE TUBE 2 X 2 X 1/4"	01 Soil Remediation		N		FT	12.000
1	008	00-IF-LR6304FAC15	BAG FILTER 4" CARBON STEEL (6)	01 Soil Remediation		N		EA	2.000
1	009	00-IF-PO10P2SH	FILTER BAGS, 10 MICRON #2 7X32	01 Soil Remediation		N		EA	25.000
1	010	04-WP-3196 MTI 2X3	PUMP GOULDS 3196 MTi2X3-6 200G	04 Distributed Goods		N		EA	2.000
1	011	04-WP-IALERT2 MNTR	iALERT2 CONDITION MONITOR, GOU	03 Electrical		N		EA	2.000
1	012	00-EC-3051L2AG0MD2	ROSEMOUNT TRANSMITTER -250 TO	03 Electrical		N		EA	1.000
1	013	00-GU-451130SL-30#	DIFF PRESS 0-30 45-1130SL-25-S	01 Soil Remediation		N		EA	2.000
1	014	00-GU-45-1259-60#	PRESS GAUGE 0-60 ASCRFT 45-125	01 Soil Remediation		N		EA	1.000
1	015	00-FS-L6EPS-S-S-3A	FLOAT SWITCH 304SS 1" FLOTECT	01 Soil Remediation		N		EA	2.000
1	016	00-VA-40160LSEG	VALVE, BUTTERFLY 4" GEAR LUG E	01 Soil Remediation		N		EA	6.000
1	017	00-PF-4 F	FLANGE, 4" WELD-ON (SLIP) 150#	01 Soil Remediation		N		EA	27.000
1	018	00-PF-4X6 EXP JNTS	EXPANSION JOINTS 4"X6" EPDM RB	01 Soil Remediation		N		EA	4.000
1	019	00-ST-PIPEB4SCHD40	STEEL PIPE,BLACK,4 in,SCHED 40	01 Soil Remediation		N		FT	15.000
1	020	00-PF-4 90	ELBOW 4" 90 CS STD LR WELD	01 Soil Remediation		N		EA	7.000
1	021	00-PF-4 T	TEE,4" CS STD WELD	01 Soil Remediation		N		EA	3.000
1	022	00-PF-3 FLNG SLIP	FLANGE 3 150# CS RF SLIP ON	01 Soil Remediation		N		EA	2.000
1	023	00-PF-4X2 RB WELD	REDUCER BUSHING 4X2" CS STD CO	01 Soil Remediation		N		EA	2.000
1	024	00-PF-4X3 RB WELD	REDUCER BUSHING 4X3" CS STD CO	01 Soil Remediation		N		EA	2.000
1	025	00-EF-1/2-UA	CONDUIT, FLEX 1/2"	03 Electrical		N		FT	20.000
1	026	00-CV-1804.1	CHECK VALVE, 4" VALMATIC SILEN	01 Soil Remediation		N		EA	2.000
1	027	00-EX-EMT1/2	EMT 1/2	03 Electrical		N		FT	8.000
1	028	00-EH-B22SHG20	UNISTRUT 1-5/8 SLOTTED 20' GAL	03 Electrical		N		FT	20.000
1	029	00-EH-B54SHG10	B-LINE 13/16 X 1 5/8 SLOTTED S	03 Electrical		N		FT	10.000
1	030	00-EF-1-UA	CONDUIT, FLEX 1"	03 Electrical		N		FT	10.000
1	031	00-EF-K0501	FITTING, 1/2" STRAIGHT LIQUIDT	03 Electrical		N		EA	4.000
1	032	00-EF-K1001	FITTING, 1" STRAIGHT LIQUIDITE	03 Electrical		N		EA	4.000
1	033	00-EF-WH-6	HUB, 2" WEATHERPROOF CONDUIT	03 Electrical		N		EA	2.000

** END OF REPORT **

Warehouse 15 *** INDENTED B.O.M. REPORT *** Batch Qty. 1

From CQ14617 FEED to CQ14617 FEED Scrap/Yield OFF

Level	Seq	Stock Code	Description	Category Code/Description	Scrap/ Yield %	Inst.	Lead Time	U/M	Usage Qty.
**Top Assembly*		15-CQ14617 FEED	CONTROL PANEL FEED PUMP TECHSA	03 Electrical	100.00	N			
1	001	00-EB-N412363612C	ENCLOSURE SUBPANEL,SWNG DR,PAD	03 Electrical		N		EA	1.000
1	002	00-EB-NP3636C	SUB PANEL WIEGMANN	03 Electrical		N		EA	1.000
1	003	00-EB-N412MFK	FOOT KIT	03 Electrical		N		EA	1.000
1	004	00-EB-P1212	PANEL 10-7/8" X 10-7/8"	03 Electrical		N		EA	1.000
1	005	00-EB-B121206CH	JUNCTION BOX ENCLOSURE 12"X12"	03 Electrical		N		EA	1.000
1	006	00-VFD-20BD027A0AY	VAR FRQ PWRFLX 27A 20HP 20BD02	03 Electrical		N		EA	2.000
1	007	00-VFD-1321-3R35-C	LINE REACTOR 35A ALLEN BRADLEY	03 Electrical		N		EA	2.000
1	008	00-VFD-20COMM-ER	COMMUNICATIONS CARD A-B DUAL-P	03 Electrical		N		EA	2.000
1	009	00-VFD-20HIMC3S	HIM POWERFLEX REMOTE DPI LCD W	03 Electrical		N		EA	2.000
1	010	00-EC-57.504.0055	TERMINALS, STANDARD GRAY	03 Electrical		N		ea	20.000
1	011	00-EC-07.311.0155	END BARRIER, WIELAND GRAY	03 Electrical		N		EA	2.000
1	012	00-EC-57.504.9055	TERMINAL BLOCKS DIN RAIL GROUN	03 Electrical		N		ea	2.000
1	013	00-EC-Z7.281.0027	JUMPER BAR,70 POLE	03 Electrical		N		ea	1.000
1	014	00-EC-G3P-040	CIRCUIT BREAKER 40A 3P 480VAC	03 Electrical		N		EA	2.000
1	015	00-EC-GDL-2	FUSE, G/S, 2 AMP	03 Electrical		N		ea	2.000
1	016	00-EC-57.904.6355	FUSEHOLDER 1P GLASS ABB	03 Electrical		N		ea	2.000
1	017	00-EH-6KD70	FAN, AXIAL 12VDC 4-11/16H, 11/	03 Electrical		N		EA	1.000
1	018	00-EH-4YD87	FAN GUARD, WIRE, 4 1/2 D	03 Electrical		N		EA	1.000
1	019	00-EH-3RP12	CORDSET, AXIAL FAN, 36"	03 Electrical		N		EA	1.000
1	020	00-EH-4YD78	FILTER GUARD ASSY, ALUM 4-45/6	03 Electrical		N		EA	1.000
1	021	00-ED-H363NRB	DISCONNECT 600V 100A 3P FUSIBL	03 Electrical		N		EA	1.000
1	022	00-EC-FLSR100ID	FUSE 100 AMP	03 Electrical		N		EA	3.000
1	023	00-EC-011419-00	THERMOSTAT, 32-140F N.O. DIN M	03 Electrical		N		EA	1.000
1	024	00-PS-A1F-PC-SS12	PRESSURE SWITCH 4-75 PSIG W/EN	03 Electrical		N		EA	1.000

** END OF REPORT **

Warehouse 18 *** INDENTED B.O.M. REPORT *** Batch Qty. 1

From WTQ14617 TRMT to WTQ14617 TRMT Scrap/Yield OFF

Level	Seq	Stock Code	Description	Category Code/Description	Scrap/ Yield %	Inst.	Lead Time	U/M	Usage Qty.
**Top Assembly*		18-WTQ14617 TRMT	TREATED WATER PUMP SKID TECHSA	04 Distributed Goods	100.00	N			
1	001	00-ST-C7X12.25	CHANNEL, 7" X 12.25	01 Soil Remediation		N		FT	40.000
1	002	00-ST-72X120X3/16	DIAMOND PLATE 72 X 120 X 3/16"	01 Soil Remediation		N		IN	120.000
1	003	00-ST-RT4X2X.25	STEEL,RECT TUBING, 4X2X1/4	01 Soil Remediation		N		FT	20.000
1	004	00-ST-SQT1.5X1/4	SQUARE TUBE 1-1/2 X 1-1/2 X 1/	01 Soil Remediation		N		FT	15.000
1	005	00-ST-SQT2X2X1/4	SQUARE TUBE 2 X 2 X 1/4"	01 Soil Remediation		N		FT	12.000
1	006	00-IF-LR6304FAC15	BAG FILTER 4" CARBON STEEL (6)	01 Soil Remediation		N		EA	2.000
1	007	00-IF-PO10P2SH	FILTER BAGS, 10 MICRON #2 7X32	01 Soil Remediation		N		EA	25.000
1	008	00-FS-L6EPS-S-S-3A	FLOAT SWITCH 304SS 1" FLOTECT	01 Soil Remediation		N		EA	2.000
1	009	04-WP-3196MTI3X410	PUMP GOULDS MODEL 3196 3X4-10H	01 Soil Remediation		N		EA	1.000
1	010	04-WP-IALERT2 MNTR	iALERT2 CONDITION MONITOR, GOU	01 Soil Remediation		N		EA	1.000
1	011	00-EC-3051L2AG0MD2	ROSEMOUNT TRANSMITTER -250 TO	03 Electrical		N		EA	1.000
1	012	00-GU-451130SL-30#	DIFF PRESS 0-30 45-1130SL-25-S	01 Soil Remediation		N		EA	2.000
1	013	00-GU-45-1259-100#	PRESS GAGE 0-100 ASCRFT 45-125	01 Soil Remediation		N		EA	1.000
1	014	00-VA-40160LSEG	VALVE, BUTTERFLY 4" GEAR LUG E	01 Soil Remediation		N		EA	5.000
1	015	00-PF-4 F	FLANGE, 4" WELD-ON (SLIP) 150#	01 Soil Remediation		N		EA	21.000
1	016	00-PF-4X6 EXP JNTS	EXPANSION JOINTS 4"X6" EPDM RB	01 Soil Remediation		N		EA	2.000
1	017	00-PF-3 FLNG SLIP	FLANGE 3 150# CS RF SLIP ON	01 Soil Remediation		N		EA	1.000
1	018	00-PF-4X3 RB WELD	REDUCER BUSHING 4X3" CS STD CO	01 Soil Remediation		N		EA	1.000
1	019	00-ST-PIPEB4SCHD40	STEEL PIPE,BLACK,4 in,SCHED 40	01 Soil Remediation		N		FT	15.000
1	020	00-PF-4 90	ELBOW 4" 90 CS STD LR WELD	01 Soil Remediation		N		EA	7.000
1	021	00-PF-4 T	TEE,4" CS STD WELD	01 Soil Remediation		N		EA	2.000
1	022	00-CV-1804.1	CHECK VALVE, 4" VALMATIC SILEN	01 Soil Remediation		N		EA	1.000
1	023	00-EX-EMT1/2	EMT 1/2	03 Electrical		N		FT	5.000
1	024	00-EF-1/2-UA	CONDUIT, FLEX 1/2"	03 Electrical		N		FT	10.000
1	025	00-EF-1-UA	CONDUIT, FLEX 1"	03 Electrical		N		FT	10.000
1	026	00-EF-K0501	FITTING, 1/2" STRAIGHT LIQUIDT	03 Electrical		N		EA	2.000
1	027	00-EF-K1001	FITTING, 1" STRAIGHT LIQUIDITE	03 Electrical		N		EA	2.000
1	028	00-EF-WH-6	HUB, 2" WEATHERPROOF CONDUIT	03 Electrical		N		EA	2.000

** END OF REPORT **

Warehouse 15 *** INDENTED B.O.M. REPORT *** Batch Qty. 1

From CQ14617 WATER to CQ14617 WATER Scrap/Yield OFF

Level	Seq	Stock Code	Description	Category Code/Description	Scrap/ Yield %	Inst.	Lead Time	U/M	Usage Qty.
**Top Assembly*		15-CQ14617 WATER	CONTROL PANEL TRT WATER TECHSA	03 Electrical	100.00	N			
1	001	00-EB-N412363612C	ENCLOSURE SUBPANEL,SWNG DR,PAD	03 Electrical		N		EA	1.000
1	002	00-EB-NP3636C	SUB PANEL WIEGMANN	03 Electrical		N		EA	1.000
1	003	00-EB-N412MFK	FOOT KIT	03 Electrical		N		EA	1.000
1	004	00-EB-P1212	PANEL 10-7/8" X 10-7/8"	03 Electrical		N		EA	1.000
1	005	00-EB-B121206CH	JUNCTION BOX ENCLOSURE 12"X12"	03 Electrical		N		EA	1.000
1	006	00-VFD-20BD034A0AY	VAR FRQ PWRFLX 34A 25HP 20BD03	03 Electrical		N		EA	1.000
1	007	00-VFD-1321-3R35-C	LINE REACTOR 35A ALLEN BRADLEY	03 Electrical		N		EA	1.000
1	008	00-VFD-20COMM-ER	COMMUNICATIONS CARD A-B DUAL-P	03 Electrical		N		EA	1.000
1	009	00-VFD-20HIMC3S	HIM POWERFLEX REMOTE DPI LCD W	03 Electrical		N		EA	1.000
1	010	00-EC-G3P-050	CIRCUIT BREAKER 50A 3P 480VAC	03 Electrical		N		EA	1.000
1	011	00-EH-6KD70	FAN, AXIAL 12VDC 4-11/16H, 11/	03 Electrical		N		EA	1.000
1	012	00-EH-4YD87	FAN GUARD, WIRE, 4 1/2 D	03 Electrical		N		EA	1.000
1	013	00-EH-3RP12	CORDSET, AXIAL FAN, 36"	03 Electrical		N		EA	1.000
1	014	00-EH-4YD78	FILTER GUARD ASSY, ALUM 4-45/6	03 Electrical		N		EA	1.000
1	015	00-ED-H363NRB	DISCONNECT 600V 100A 3P FUSIBL	03 Electrical		N		EA	1.000
1	016	00-EC-FLSR075ID	FUSE DUAL-ELEMENT TIME-DELAY W	03 Electrical		N		EA	3.000
1	017	00-EC-011419-00	THERMOSTAT, 32-140F N.O. DIN M	03 Electrical		N		EA	1.000
1	018	00-PS-A1F-PC-SS12	PRESSURE SWITCH 4-75 PSIG W/EN	03 Electrical		N		EA	1.000

** END OF REPORT **

Fliteway Technologies, Inc.
2129 East Birchwood Ave., Cudahy, WI 53110
(414) 483-5600 • 1-800-236-3580 • FAX (414) 483-1957

WARRANTY

ONE YEAR LIMITED WARRANTY- Fliteway Technologies, Inc. remediation equipment is warranted by Fiteway to the original user against defects in workmanship or materials under normal use for one year after date of shipment. Exceptions to this are positive displacement vacuum pumps and blowers which have 18 Month warranties direct from the original manufacturer (Roots and Sutorbilt only). Any part determined by Fliteway Technologies, Inc. to be defective in material or workmanship and returned to Fliteway Technologies, Inc., shipping costs prepaid, will be repaired or replaced at Fliteway's option, as the exclusive remedy. See PROMPT DISPOSITION below for limited warranty claim procedures. This limited warranty gives the purchaser specific legal rights which may vary from state to state.

LIMITATIONS OF LIABILITY- To the extent allowable under applicable law, Fliteway's liability (or incidental and consequential damages is expressly disclaimed. Fliteway's liability in all events is limited to, and shall not exceed, the purchase price.

PRODUCT SUITABILITY - Many states and localities have regulations and codes governing sales, construction, installation, and/or use of products for certain purposes, which may vary from those in neighboring areas. While Fliteway Technologies, Inc. attempts to assure that its products comply with such codes, it cannot guarantee compliance, and cannot be responsible for how the product is installed or used. Before purchase and use of a product, please determine local and national codes and regulations, review the product application, and verify that the product, installation and use comply with those regulations and codes.

PROMPT DISPOSITION - Fliteway Technologies, Inc. will make every effort for a prompt correction or other adjustment with respect to any product which proves to be defective within the limited warranty. For any product believed to be defective within limited warranty, first write or call Fliteway Technologies, Inc. giving the model and serial number of tile unit and describing the nature of the defect. Title and risk of loss pass to the buyer on delivery to common carrier. If product was damaged in transit to you, file a claim with carrier. Freight of postage charges on returns to the factory are at the customer's expense. If returned product is returned under warranty, the manufacturer will cover return freight.

Fliteway Technologies, Inc.

Engineering Drawings

2129 E. Birchwood Avenue, Cudahy, WI 53110

(414) 483-5600 (800) 236-3580 Fax: (414) 483-1957

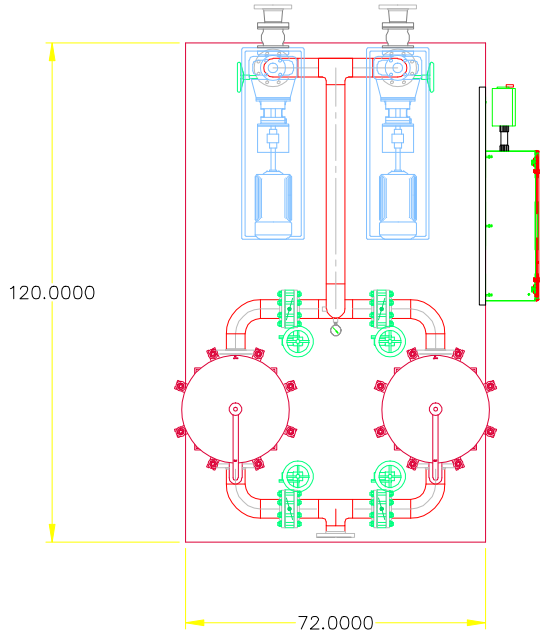

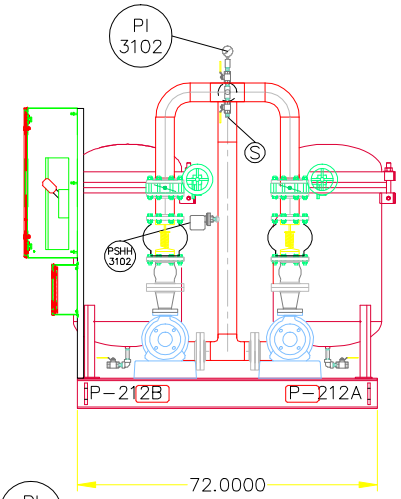

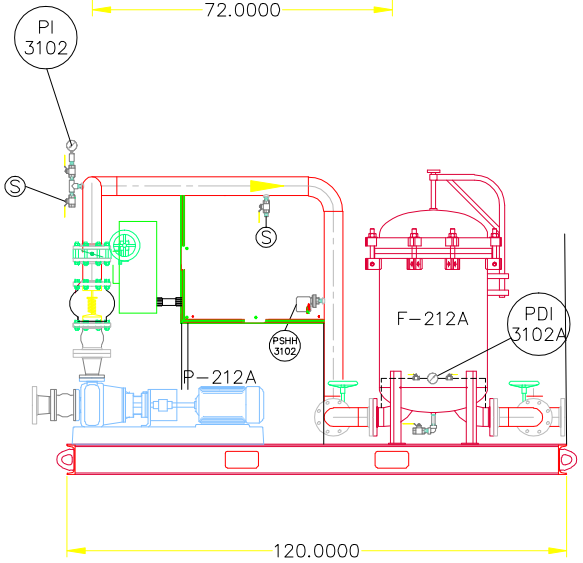

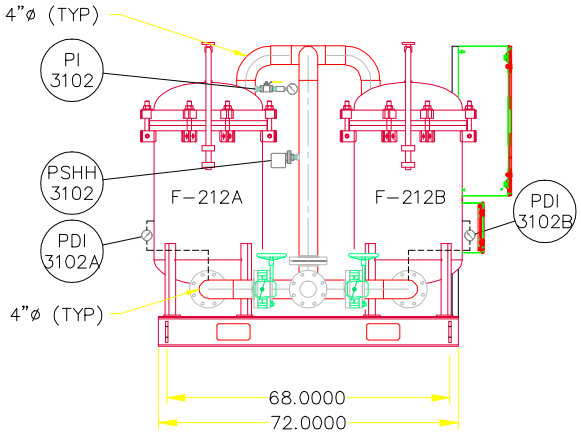

THIS DRAWING IS THE PROPERTY OF
Fliteway Technologies, Inc
2129 EAST BIRCHWOOD AVE
CUDAHY WI, 53110
414.483.5600 414.483.1957
AND IS NOT TO BE REPRODUCED
WITHOUT WRITTEN PERMISSION

6'X10' FEED PUMP SKID

TECHSAS INC.
KIRTLAND AFB

9/19/16	SIZE	FSCM NO.	DWG NO. Q14617	REV 1
	SCALE NONE		SHEET 1 OF 1

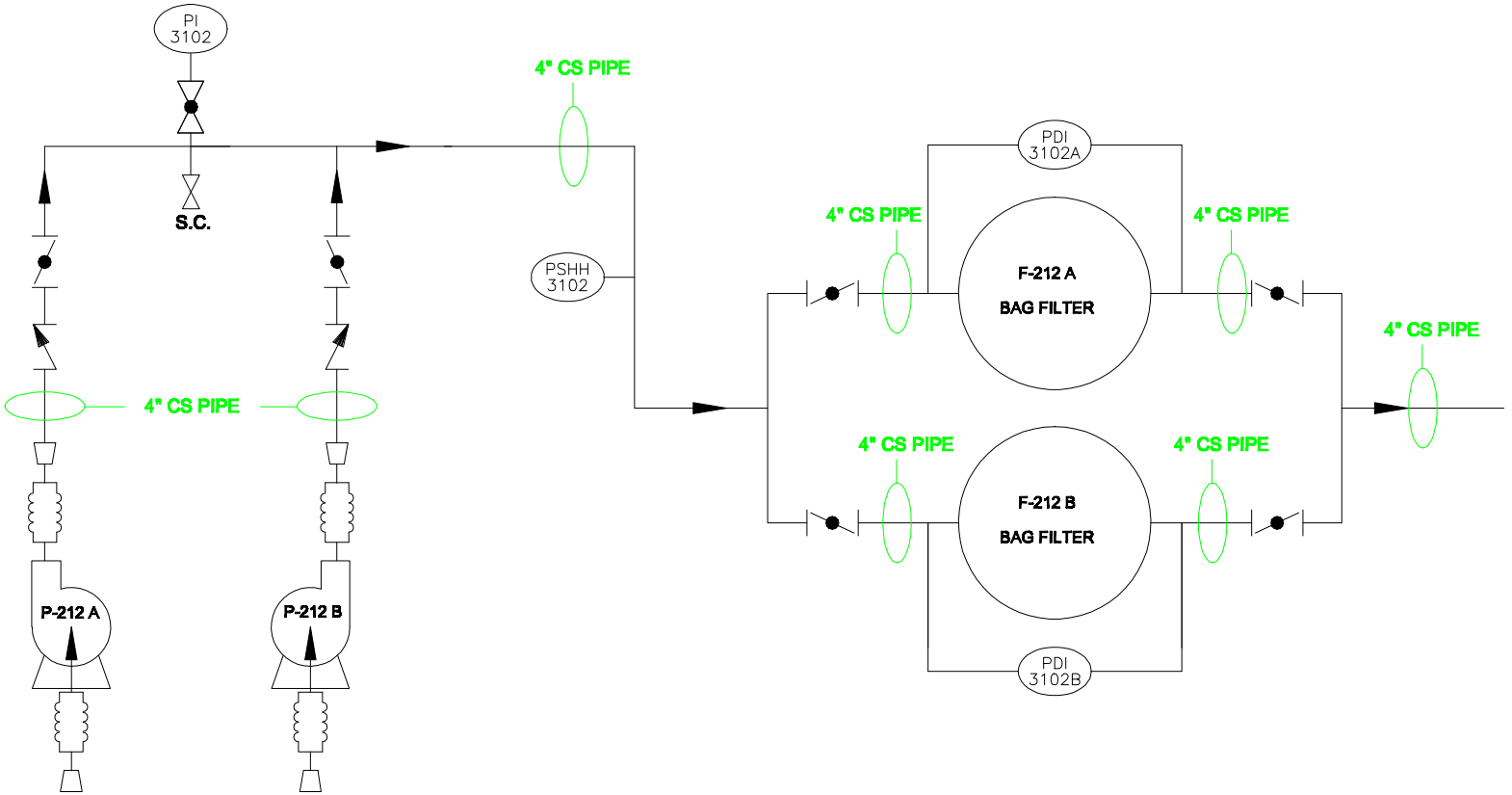

CONCENTRIC REDUCER

S.C. SAMPLE CONNECTION/PORT

CHECK VALVE

BALL VALVE

EXPANSION JOINT

BUTTERFLY VALVE

THIS DRAWING IS THE PROPERTY OF
Fliteway Technologies, Inc
2129 EAST BIRCHWOOD AVE
CUDAHY WI, 53110
414.483.5600 414.483.1957
AND IS NOT TO BE REPRODUCED WITHOUT WRITTEN PERMISSION

8/11/16

6'X10' FEED PUMP P&ID

TECHSAS INC.
KIRTLAND AFB

SIZE	FSCM NO.	DWG NO.	REV
		Q14617	1

SCALE NONE

SHEET 1 OF 1

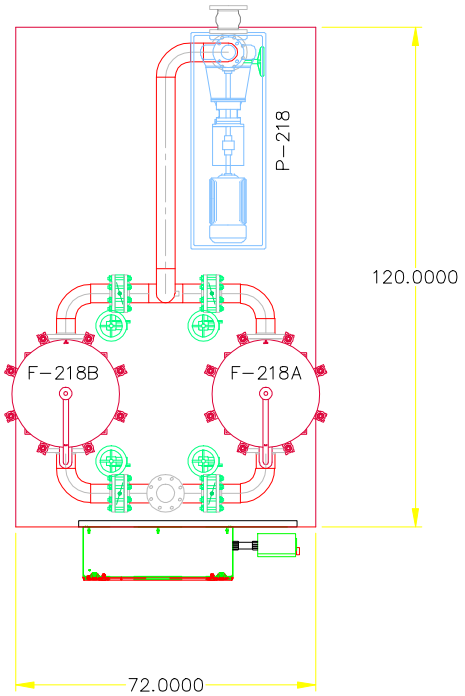

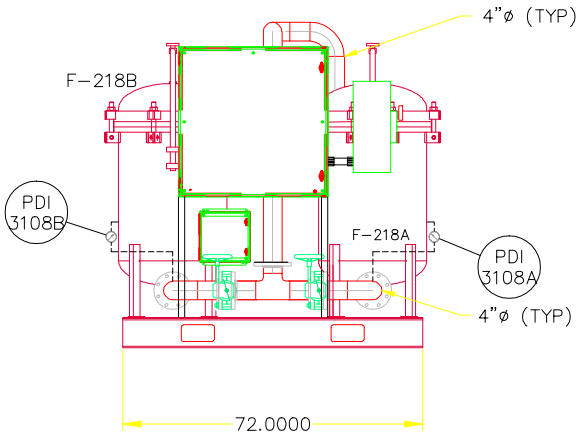

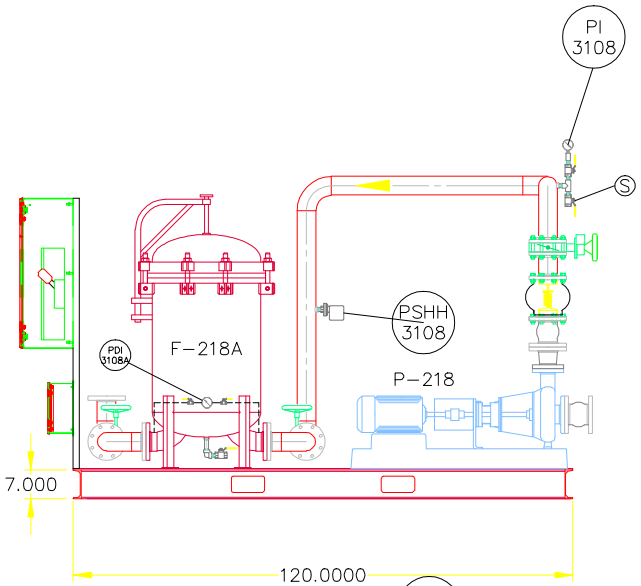

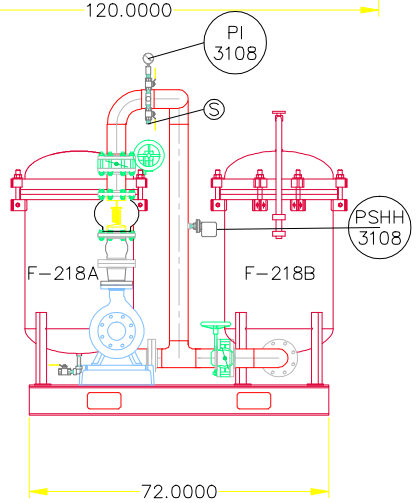

THIS DRAWING IS THE PROPERTY OF
Fliteway Technologies, Inc
2129 EAST BIRCHWOOD AVE
CUDAHY WI, 53110
414.483.5600 414.483.1957
AND IS NOT TO BE REPRODUCED
WITHOUT WRITTEN PERMISSION

6'X10' TREATED WATER PUMP SKID

TECHSAS INC.
KIRTLAND AFB

9/19/16	SIZE	FSCM NO.	DWG NO. Q14617
	REV 1		
	SCALE NONE	SHEET 1 OF 1	

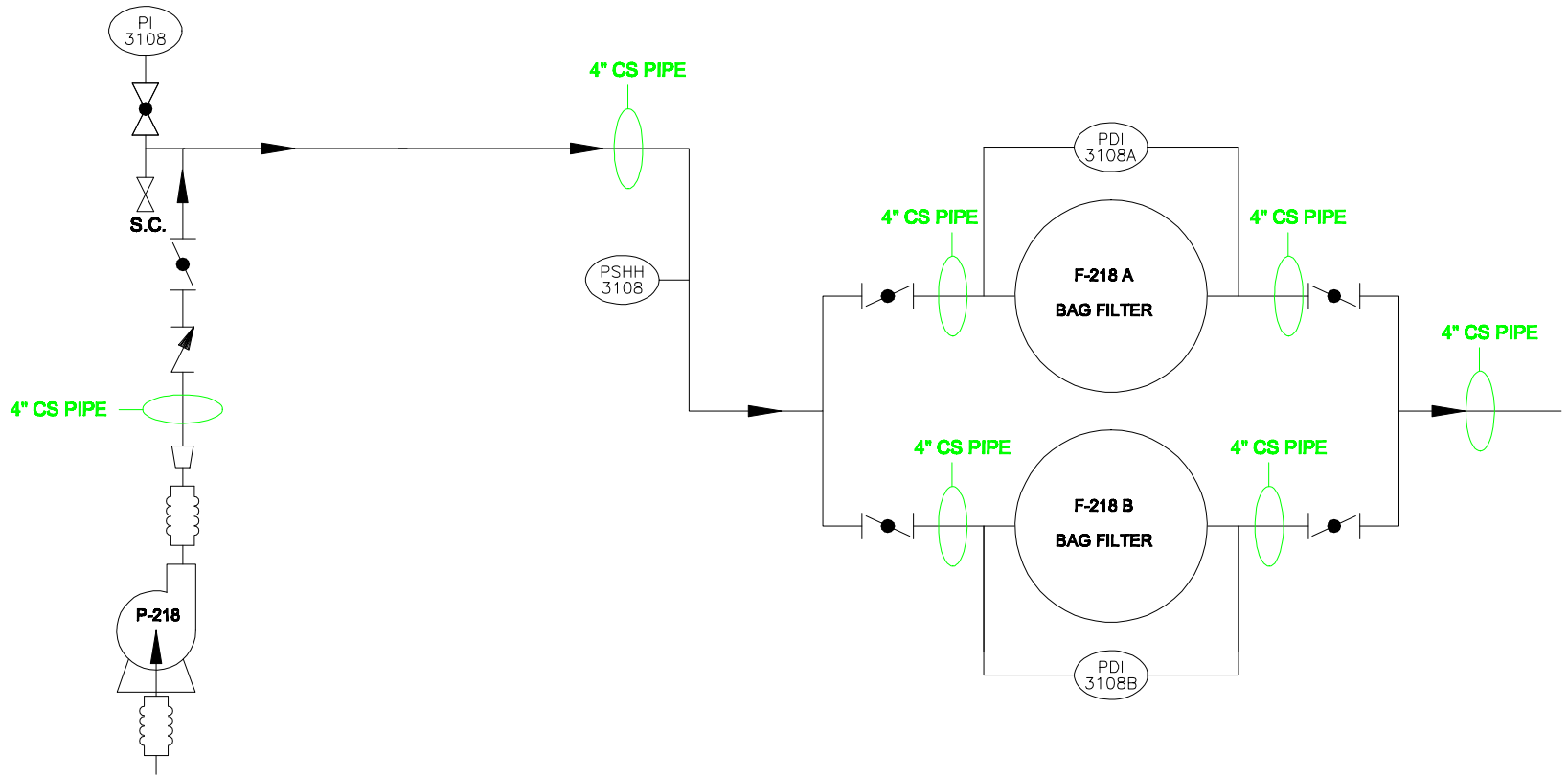

CONCENTRIC REDUCER

S.C. SAMPLE CONNECTION/PORT

CHECK VALVE

BALL VALVE

EXPANSION JOINT

BUTTERFLY VALVE

THIS DRAWING IS THE PROPERTY OF
Fliteway Technologies, Inc
2129 EAST BIRCHWOOD AVE
CUDAHY WI, 53110
414.483.5600 414.483.1957
AND IS NOT TO BE REPRODUCED
WITHOUT WRITTEN PERMISSION

8/11/16

6'X10' TREATED WATER P&ID

TECHSAS INC.
KIRTLAND AFB

SIZE	FSCM NO.	DWG NO.	REV
		Q14617	1

SCALE NONE

SHEET 1 OF 1

FEED PUMP SKID #1

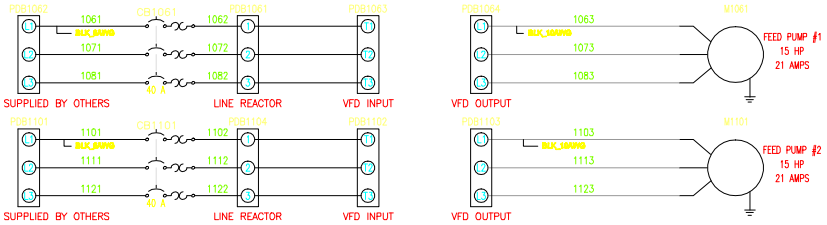

HIGH VOLTAGE PANEL

VFD FEED PUMP #1 WIRING

VFD_TB_12	VFD FAULT - PROVIDED OVER ETHERNET
VFD_TB_13	
VFD_TB_15	VFD RUNNING - PROVIDED OVER ETHERNET
VFD_TB_16	
VFD_TB_25	N
VFD_TB_28	120VAC VFD RUN SIGNAL (FROM MCP)

VFD FEED PUMP #2 WIRING

VFD_TB_12	VFD FAULT - PROVIDED OVER ETHERNET
VFD_TB_13	
VFD_TB_15	VFD RUNNING - PROVIDED OVER ETHERNET
VFD_TB_16	
VFD_TB_25	N
VFD_TB_28	120VAC VFD RUN SIGNAL (FROM MCP)

LOW VOLTAGE JUNCTION BOX

LOW VOLTAGE JBOX

HHL_F/S	120VAC OR 24VDC CONTROL POWER
HHL_F/S	TANK HHL ALARM (DRY CONTACT)
LL_F/S	
LL_F/S	TANK LLL (DRY CONTACT)
PRS._SW	
PRS._SW	HIGH PRESSURE SWITCH ALARM (N.O. DRY CONTACT)
FLOW_METER	24VDC CONTROL POWER
FLOW_METER	FLOW METER 4-20mA SIGNAL
FLOW_METER	FLOW METER SHIELD WIRE
P1_THRM_OL	120VAC CONTROL POWER
P1_THRM_OL	FEED PUMP #1 MOTOR THERMAL OVERLOAD WIRED TO VFD, VIEWED OVER ETHERNET
P2_THRM_OL	
P2_THRM_OL	FEED PUMP #2 MOTOR THERMAL OVERLOAD WIRED TO VFD, VIEWED OVER ETHERNET
LVL_TRANS	24VDC CONTROL POWER
LVL_TRANS	LEVEL TRANSMITTER 4-20mA SIGNAL
LVL_TRANS	LEVEL TRANSMITTER SHIELD WIRE

TREAT WATER PUMP SKID #2

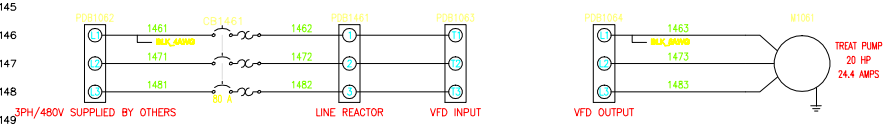

HIGH VOLTAGE PANEL

VFD TREAT PUMP WIRING

VFD_TB_12	VFD FAULT - PROVIDED OVER ETHERNET
VFD_TB_13	
VFD_TB_15	VFD RUNNING - PROVIDED OVER ETHERNET
VFD_TB_16	
VFD_TB_25	N
VFD_TB_28	120VAC VFD RUN SIGNAL (FROM MCP)

LOW VOLTAGE JUNCTION BOX

LOW VOLTAGE JBOX

HHL_F/S	120VAC OR 24VDC CONTROL POWER
HHL_F/S	TANK HHL ALARM (DRY CONTACT)
LL_F/S	
LL_F/S	TANK LLL (DRY CONTACT)
PRS._SW	
PRS._SW	HIGH PRESSURE SWITCH ALARM (N.O. DRY CONTACT)
FM_24V	24VDC CONTROL POWER
FM_TR	FLOW METER 4-20mA SIGNAL
FM_S	FLOW METER SHIELD WIRE
TP_THRM_OL	120VAC CONTROL POWER
TP_THRM_OL	TREATMENT PUMP MOTOR THERMAL OVERLOAD WIRED TO VFD, VIEWED OVER ETHERNET
LVL_TRANS	24VDC CONTROL POWER
LVL_TRANS	LEVEL TRANSMITTER 4-20mA SIGNAL
LVL_TRANS	LEVEL TRANSMITTER SHIELD WIRE

THIS PRINT AND ITS CONTENTS ARE THE PROPERTY OF FLITEWAY AND MUST NOT BE USED FOR ANY PURPOSE NOT AUTHORIZED BY FLITEWAY. DO NOT DISCLOSE, REPRODUCE OR OTHERWISE USE THIS PRINT OR ITS CONTENTS IN ANY MANNER DETRIMENTAL TO THE INTEREST OF FLITEWAY WITHOUT FLITEWAY'S PRIOR WRITTEN CONSENT. FLITEWAY RESERVES ALL RIGHTS OF DESIGN AND INVENTION TO THE EXTENT PERMITTED BY LAW.

CAD SYSTEM	ACADE
SCALE	1:1
UNITS	IN
FORMAT	D

Fliteway Technologies, Inc.
2129 East Birchwood Ave.
Cudahy, WI 53110

DRAWN BY	Josh
Q #	Q14617 R2
DESIGNED FOR	TECHSAS, Inc.
DESCRIPTION	
Drawing Number	

PLOTTED : 12-16-2014

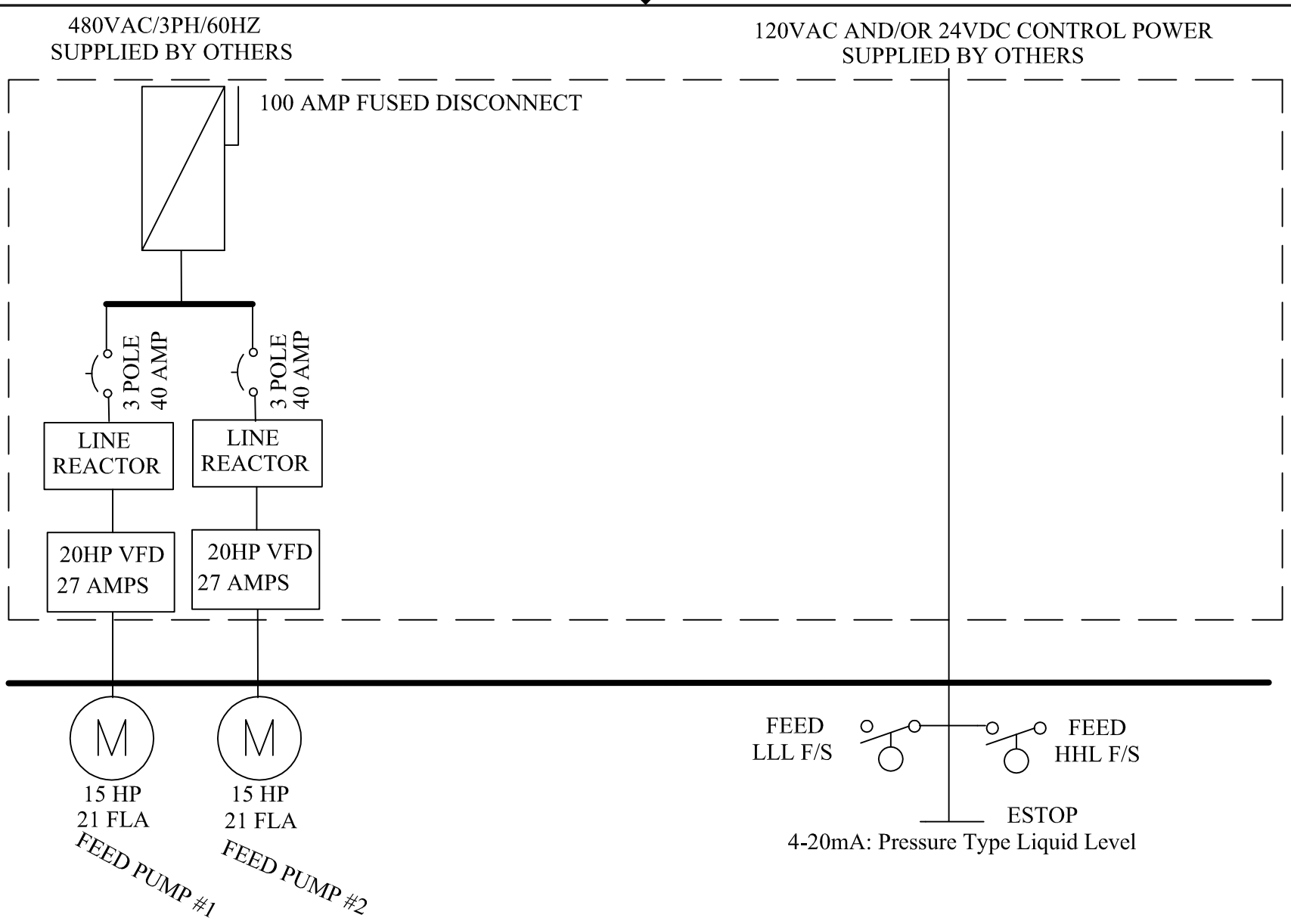

THIS DRAWING IS THE PROPERTY OF
Fliteway Technologies, Inc
2129 East Birchwood Avenue
Cudahy, WI 53110
414.483.5600 414.483.1957
AND IS NOT BE REPRODUCED
WITHOUT WRITTEN PERMISSION

ONE LINE ELECTRICAL DIAGRAM

FEED PUMP SKID

9/23/16

TECHSAS, Inc

SIZE	FSCM NO.	DWG NO.	REV
		Q14617	2

SCALE NONE | SHEET

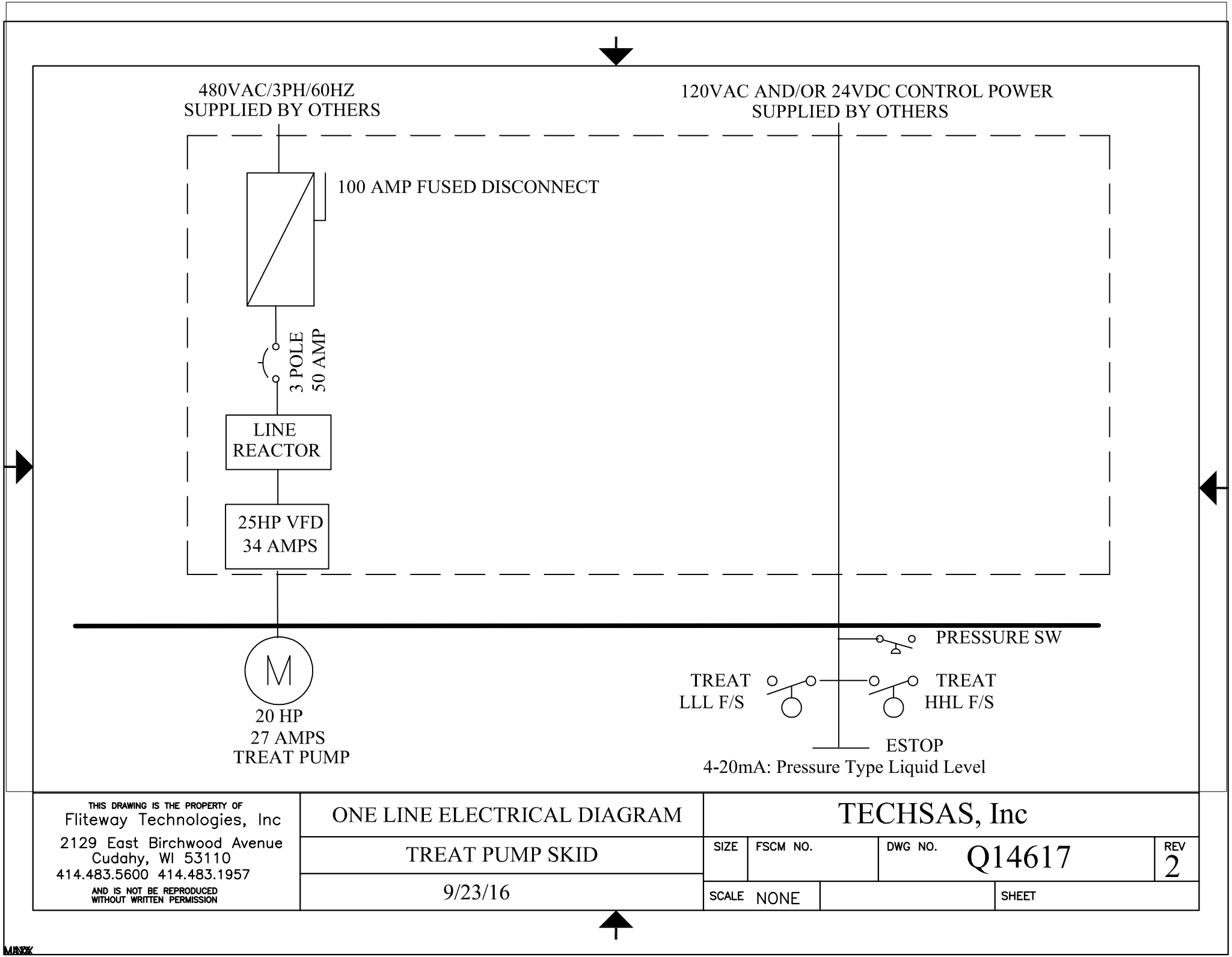

THIS DRAWING IS THE PROPERTY OF
Fliteway Technologies, Inc
2129 East Birchwood Avenue
Cudahy, WI 53110
414.483.5600 414.483.1957
AND IS NOT BE REPRODUCED
WITHOUT WRITTEN PERMISSION

ONE LINE ELECTRICAL DIAGRAM

TREAT PUMP SKID

9/23/16

TECHSAS, Inc

SIZE	FSCM NO.	DWG NO.	REV
		Q14617	2

SCALE NONE | SHEET

Fliteway Technologies, Inc.

Test Data

2129 E. Birchwood Avenue, Cudahy, WI 53110

(414) 483-5600 (800) 236-3580 Fax: (414) 483-1957

ENCLOSED INDUSTRIAL CONTROL PANEL

Fliteway Technologies, Inc.
2129 E. Birchwood Ave. - Cudahy, WI 53110

480 Volts – 3 Phase - 60 Hz
Full Load Amps: 27

Largest Motor: 15 HP
Drawing No: Q14617 Rev 2
Enclosure: NEMA 4

Short circuit current __5_kA rms symmetrical,
240 V maximum

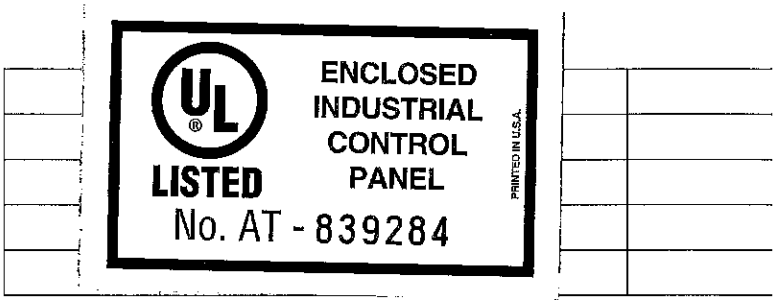

ENCLOSED INDUSTRIAL CONTROL PANEL

Fliteway Technologies, Inc.
2129 E. Birchwood Ave. - Cudahy, WI 53110

480 Volts – 3 Phase - 60 Hz
Full Load Amps: 50

Largest Motor: 25 HP
Drawing No: Q14617 Rev 2
Enclosure: NEMA 4

Short circuit current __5_kA rms symmetrical,
240 V maximum

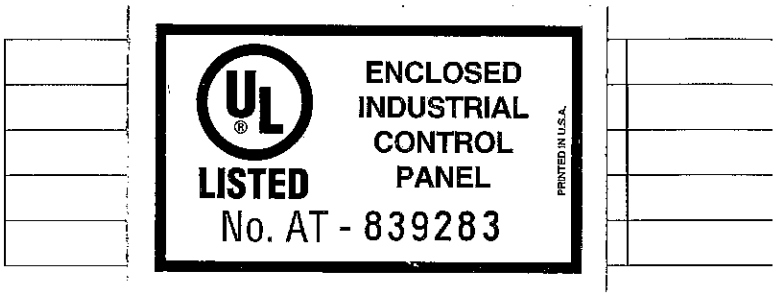

Fliteway Technologies, Inc.

Instrumentation for Groundwater Treatment Feed Tank

2129 E. Birchwood Avenue, Cudahy, WI 53110

(414) 483-5600 (800) 236-3580 Fax: (414) 483-1957

Product Data Sheet
September 2014
00813-0100-4001, Rev SA

Rosemount 3051 Pressure Transmitter

With the Rosemount 3051 Pressure Transmitter, you'll gain more control over your plant. You'll be able to reduce product variation and complexity as well as your total cost of ownership by leveraging one device across a number of pressure, level and flow applications. You'll have access to information you can use to diagnose, correct and even prevent issues. And with unparalleled reliability and experience, the Rosemount 3051 is the industry standard that will help you perform at higher levels of efficiency and safety so you can remain globally competitive.

ROSEMOUNT

EMERSON.
Process Management

Setting the Standard for Pressure Measurement

Proven best-in-class performance, reliability and safety

- Over 7 million installed
- Reference accuracy 0.04% of span
- Installed total performance of 0.14% of span
- 10-year stability of 0.2% of URL
- SIL2/3 certified (IEC 61508)

Maximize installation and application flexibility with the coplanar platform

- Improve reliability and performance with integrated DP Flowmeters, DP Level solutions and integral manifolds
- Easy installation with all solutions fully assembled, leak-tested and calibrated
- Meet your application needs with an unsurpassed offering

Advanced functionality

Power advisory diagnostics

- Detect on-scale failures caused by electrical loop issues before they impact your process operation
- This capability is safety certified for your most critical applications

Local operator interface

- Straightforward menus and built-in configuration buttons allow you commission the device in less than a minute
- Configure in hazardous-area locations without removing the transmitter cover using external buttons

Contents

Rosemount 3051C Coplanar™ Pressure Transmitter 4
Rosemount 3051T In-Line Pressure Transmitter 11
Rosemount 3051CF Flowmeter Selection Guide 17
Rosemount 3051CFA Annubar Flowmeter 18
Rosemount 3051CFC Compact Flowmeter 26
Rosemount 3051CFP Integral Orifice Flowmeter 32
Rosemount 3051L Level Transmitter 38
Specifications 45
3051 Product Certifications 56
Pipe I.D. Range Codes 64
Rosemount 3051 Dimensional Drawings 66
Options 80

Industry leading capabilities extended to IEC 62591 (*Wireless*HART®)

- Cost effectively implement wireless on the industry's most proven platform
- Optimize safety with the industry's only intrinsically safe power module
- Eliminate wiring design and construction complexities to lower costs by 40-60%
- Quickly deploy new pressure, level and flow measurements in 70% less time

Innovative, integrated DP Flowmeters

- Fully assembled, configured, and leak tested for out-of-the-box installation
- Reduce straight pipe requirements, lower permanent pressure loss and achieve accurate measurement in small line sizes
- Up to 1.65% volumetric flow accuracy at 8:1 turndown

Proven, reliable, and innovative DP Level Technologies

- Connect to virtually any process with a comprehensive offering of process connections, fill fluids, direct mount or capillary connections and materials
- Quantify and optimize total system performance with QZ option
- Operate at higher temperature and in vacuum applications
- Optimize level measurement with cost efficient Rosemount Tuned-System™ Assemblies

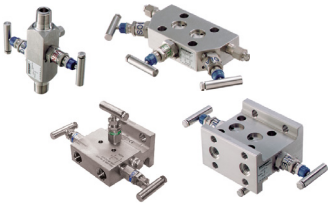

Instrument manifolds – quality, convenient, and easy

- Designed and engineered for optimal performance with Rosemount transmitters
- Save installation time and money with factory assembly
- Offers a variety of styles, materials and configurations

Rosemount 3051L Level Transmitter

3051L Level Transmitter

The Rosemount 3051L Level Transmitter combines the performance and capabilities of Rosemount 3051 Transmitters with the reliability and quality of a direct mount seal in one model number. 3051L Level Transmitters offer a variety of process connections, configurations, and fill fluid types to meet a breadth of level applications. Capabilities of a Rosemount 3051L Level Transmitter include:

- Quantify and optimize total system performance (Option code **QZ**)
- Tuned-System Assembly (Option code **S1**)
- Power Advisory can proactively detect degraded electrical loop integrity issues (Option Code **DA0**)
- Local Operator Interface with straightforward menus and built-in configuration buttons (Option Code **M4**)

See Specifications and options for more details on each configuration. Specification and selection of product materials, options, or components must be made by the purchaser of the equipment. See page 54 for more information on Material Selection.

Additional information:
Specifications: page 45
Certifications: page 56
Dimensional Drawings: page 66

Table 6. Rosemount 3051L Level Transmitter Ordering Information

★ The Standard offering represents the most common options. The starred options (★) should be selected for best delivery. The Expanded offering is subject to additional delivery lead time.

Model	Transmitter type			
3051L[1]	Level Transmitter			
Pressure range				
2	–250 to 250 inH_2O (-621,60 to 621,60 mbar)			★
3	–1000 to 1000 inH_2O (-2,48 to 2,48 bar)			★
4	–300 to 300 psi (-20,68 to 20,68 bar)			★
Transmitter output				
A[2]	4–20 mA with Digital Signal Based on HART Protocol			★
F	FOUNDATION fieldbus Protocol			★
W[3]	PROFIBUS PA Protocol			★
X[4]	Wireless (requires wireless options and engineered polymer housing)			★
M[5]	Low-Power 1-5 Vdc with Digital Signal Based on HART Protocol			
Process connection size, material, extension length (high side)				
Code	**Process connection size**	**Material**	**Extension length**	
G0[6]	2-in./DN 50/A	316L SST	Flush Mount Only	★
H0[6]	2-in./DN 50	Alloy C-276	Flush Mount Only	★
J0	2-in./DN 50	Tantalum	Flush Mount Only	★
A0[6]	3-in./DN 80	316L SST	Flush Mount	★
A2[6]	3-in./DN 80	316L SST	2-in./50 mm	★
A4[6]	3-in./DN 80	316L SST	4-in./100 mm	★

Table 6. Rosemount 3051L Level Transmitter Ordering Information

★ The Standard offering represents the most common options. The starred options (★) should be selected for best delivery.
The Expanded offering is subject to additional delivery lead time.

A6[6]	3-in./DN 80	316L SST	6-in./150 mm	★
B0[6]	4-in./DN 100	316L SST	Flush Mount	★
B2[6]	4-in./DN 100	316L SST	2-in./50 mm	★
B4[6]	4-in./DN 100	316L SST	4-in./100 mm	★
B6[6]	4-in./DN 100	316L SST	6-in./150 mm	★
C0[6]	3-in./DN 80	Alloy C-276	Flush Mount	★
C2[6]	3-in./DN 80	Alloy C-276	2-in./50 mm	★
C4[6]	3-in./DN 80	Alloy C-276	4-in./100 mm	★
C6[6]	3-in./DN 80	Alloy C-276	6-in./150 mm	★
D0[6]	4-in./DN 100	Alloy C-276	Flush Mount	★
D2[6]	4-in./DN 100	Alloy C-276	2-in./50 mm	★
D4[6]	4-in./DN 100	Alloy C-276	4-in./100 mm	★
D6[6]	4-in./DN 100	Alloy C-276	6-in./150 mm	★
E0	3-in./DN 80	Tantalum	Flush Mount Only	★
F0	4-in./DN 100	Tantalum	Flush Mount Only	★
Mounting flange size, rating, material (high side)				
	Size	**Rating**	**Material**	
M	2-in.	ANSI/ASME B16.5 Class 150	CS	★
A	3-in.	ANSI/ASME B16.5 Class 150	CS	★
B	4-in.	ANSI/ASME B16.5 Class 150	CS	★
N	2-in.	ANSI/ASME B16.5 Class 300	CS	★
C	3-in.	ANSI/ASME B16.5 Class 300	CS	★
D	4-in.	ANSI/ASME B16.5 Class 300	CS	★
P	2-in.	ANSI/ASME B16.5 Class 600	CS	★
E	3-in.	ANSI/ASME B16.5 Class 600	CS	★
X[6]	2-in.	ANSI/ASME B16.5 Class 150	316 SST	★
F[6]	3-in.	ANSI/ASME B16.5 Class 150	316 SST	★
G[6]	4-in.	ANSI/ASME B16.5 Class 150	316 SST	★
Y[6]	2-in.	ANSI/ASME B16.5 Class 300	316 SST	★
H[6]	3-in.	ANSI/ASME B16.5 Class 300	316 SST	★
J[6]	4-in.	ANSI/ASME B16.5 Class 300	316 SST	★
Z[6]	2-in.	ANSI/ASME B16.5 Class 600	316 SST	★
L[6]	3-in.	ANSI/ASME B16.5 Class 600	316 SST	★
Q	DN 50	PN 10-40 per EN 1092-1	CS	★
R	DN 80	PN 40 per EN 1092-1	CS	★
S	DN 100	PN 40 per EN 1092-1	CS	★
V	DN 100	PN 10/16 per EN 1092-1	CS	★
K[6]	DN 50	PN 10-40 per EN 1092-1	316 SST	★
T[6]	DN 80	PN 40 per EN 1092-1	316 SST	★
U[6]	DN 100	PN 40 per EN 1092-1	316 SST	★

Table 6. Rosemount 3051L Level Transmitter Ordering Information

★ The Standard offering represents the most common options. The starred options (★) should be selected for best delivery.
The Expanded offering is subject to additional delivery lead time.

Mounting flange size, rating, material (high side)				
	Size	**Rating**	**Material**	
W[6]	DN 100	PN 10/16 per EN 1092-1	316 SST	★
7[6]	4 in.	ANSI/ASME B16.5 Class 600	316 SST	★
1	N/A	10K per JIS B2238	CS	
2	N/A	20K per JIS B2238	CS	
3	N/A	40K per JIS B2238	CS	
4[6]	N/A	10K per JIS B2238	316 SST	
5[6]	N/A	20K per JIS B2238	316 SST	
6[6]	N/A	40K per JIS B2238	316 SST	

Seal fill fluid (high side)		**Specific gravity**	**Temperature limits [ambient temperature of 70° F (21° C)]**	
D	Silicone 200	0.93	-49 to 401 °F (-45 to 205 °C)	★
F	Silicone 200 for Vacuum Applications	0.93	For use in vacuum applications below 14.7 psia (1 bar-a), refer to vapor pressure curves in Rosemount DP Level Fill Fluid Specification Technical Note (00840-2100-4016).	★
L	Silicone 704	1.07	32 to 401 °F (0 to 205 °C)	★
C	Silicone 704 for Vacuum Applications	1.07	For use in vacuum applications below 14.7 psia (1 bar-a), refer to vapor pressure curves in Rosemount DP Level Fill Fluid Specification Technical Note (00840-2100-4016).	★
R	Silicone 705	1.09	68 to 401 °F (20 to 205 °C)	★
V	Silicone 705 for Vacuum Applications	1.09	For use in vacuum applications below 14.7 psia (1 bar-a), refer to vapor pressure curves in Rosemount DP Level Fill Fluid Specification Technical Note (00840-2100-4016).	★
A	SYLTHERM™ XLT	0.85	-102 to 293 °F (-75 to 145 °C)	★
H	Inert (Halocarbon)	1.85	-49 to 320 °F (-45 to 160 °C)	★
G	Glycerine and Water	1.13	5 to 203 °F (-15 to 95 °C)	★
N	Neobee® M-20	0.92	5 to 401 °F (-15 to 205 °C)	★
P	Propylene Glycol and Water	1.02	5 to 203 F (-15 to 95 °C)	★

Low pressure side					
	Configuration	**Flange adapter**	**Diaphragm material**	**Sensor fill fluid**	
11[6]	Gage	SST	316L SST	Silicone	★
21	Differential	SST	316L SST	Silicone	★
22[6]	Differential	SST	Alloy *C-276*	Silicone	★
2A[7]	Differential	SST	316L SST	Inert (Halocarbon)	★
2B[6][7]	Differential	SST	Alloy *C-276*	Inert (Halocarbon)	★
31[6]	Tuned-System Assembly with Remote Seal	None	316L SST	Silicone (requires Option Code S1)	★

Table 6. Rosemount 3051L Level Transmitter Ordering Information

★ The Standard offering represents the most common options. The starred options (★) should be selected for best delivery. The Expanded offering is subject to additional delivery lead time.

O-ring			
A	Glass-filled PTFE		★
Housing material		**Conduit entry size**	
A	Aluminum	½–14 NPT	★
B	Aluminum	M20 × 1.5	★
J	SST	½–14 NPT	★
K	SST	M20 × 1.5	★
P[8]	Engineered polymer	No conduit entries	★
D[9]	Aluminum	G½	
M[9]	SST	G½	

Wireless options (requires Wireless Output Code X and Engineered Polymer Housing Code P)

Wireless transmit rate, operating frequency, and protocol		
WA3	User Configurable Transmit Rate, 2.4GHz *Wireless*HART	★
Antenna and SmartPower		
WP5	Internal Antenna, Compatible with Green Power Module (I.S. Power Module Sold Separately)	★

HART Revision configuration (requires HART Protocol Output Code A)

HR5[2]	Configured for HART Revision 5	★
HR7[2]	Configured for HART Revision 7	★

Options (include with selected model number)

Extended product warranty		
WR3	3-year limited warranty	★
WR5	5-year limited warranty	★
PlantWeb control functionality		
A01[10]	FOUNDATION fieldbus Control Function Block Suite	★
PlantWeb diagnostic functionality		
DA0[18]	Power Advisory HART Diagnostic	★
D01[10]	FOUNDATION fieldbus Diagnostics Suite	★
Seal assemblies		
S1[11]	Assembled to One Rosemount 1199 Seal	★
Product certifications		
E8	ATEX Flameproof and Dust Certification	★
I1[12]	ATEX Intrinsic Safety and Dust	★
IA	ATEX FISCO Intrinsic Safety; for FOUNDATION fieldbus or PROFIBUS PA protocols only	★
N1	ATEX Type n Certification and Dust	★
K8	ATEX Flameproof, Intrinsic Safety, Type n, Dust (combination of E8, I1 and N1)	★
E4[13]	TIIS Flameproof	★
E5	FM Explosion-proof, Dust Ignition-proof	★
I5[14]	FM Intrinsically Safe, Nonincendive	★
IE	FM FISCO Intrinsically Safe; for FOUNDATION fieldbus or PROFIBUS PA protocols only	★
K5	FM Explosion-proof, Dust Ignition-Proof, Intrinsically Safe, and Division 2	★

Table 6. Rosemount 3051L Level Transmitter Ordering Information

★ The Standard offering represents the most common options. The starred options (★) should be selected for best delivery. The Expanded offering is subject to additional delivery lead time.

C6	CSA Explosion-proof, Dust Ignition-proof, Intrinsically Safe, and Division 2	★
I6[8]	CSA Intrinsic Safety	★
K6	CSA and ATEX Explosion-proof, Intrinsically Safe, and Division 2 (combination of C6, E8, and I1)	★
E7	IECEx Flameproof, Dust Ignition-proof	★
I7	IECEx Intrinsic Safety	★
N7	IECEx Type n Certification	★
K7	IECEx Flameproof, Dust Ignition-proof, Intrinsic Safety, and Type n (combination of I7, N7 and E7)	★
E2	INMETRO Flameproof	★
I2	INMETRO Intrinsic Safety	★
IB	INMETRO FISCO intrinsically safe; for FOUNDATION fieldbus or PROFIBUS PA protocols only	★
K2	INMETRO Flameproof, Intrinsic Safety	★
E3	China Flameproof	★
I3	China Intrinsic Safety	★
N3	China Type n	★
EM	Technical Regulations Customs Union (EAC) Flameproof	★
IM	Technical Regulations Customs Union (EAC) Intrinsic Safety	★
KM	Technical Regulations Customs Union (EAC) Flameproof and Intrinsic Safety	★
KB	FM and CSA Explosion-proof, Dust Ignition Proof, Intrinsically Safe, and Division 2 (combination of K5 and C6)	★
KD	FM, CSA, and ATEX Explosion-proof, Intrinsically Safe (combination of K5, C6, I1, and E8)	★
Shipboard approvals		
SBS[7]	American Bureau of Shipping	★
SBV[7] [15]	Bureau Veritas (BV)	
SDN[7]	Det Norske Veritas	
SLL[7][15]	Lloyds Register (LR)	
Bolting material		
L4	Austenitic 316 SST Bolts	★
L5	ASTM A 193, Grade B7M bolts	★
L6	Alloy K-500 Bolts	★
L8	ASTM A 193 Class 2, Grade B8M Bolts	★
Display and interface options		
M4[16]	LCD Display with Local Operator Interface	★
M5	LCD Display	★
Calibration certification		
Q4	Calibration Certificate	★
QP	Calibration Certificate and tamper evident seal	★
QG[17]	Calibration Certificate and GOST Verification Certificate	★
Material traceability certification		
Q8	Material Traceability Certification per EN 10204 3.1	★
Quality certification for safety		
QS[18]	Prior-use certificate of FMEDA data	★
QT[18]	Safety certified to IEC 61508 with certificate of FMEDA	★

Table 6. Rosemount 3051L Level Transmitter Ordering Information

★ The Standard offering represents the most common options. The starred options (★) should be selected for best delivery.
The Expanded offering is subject to additional delivery lead time.

Toolkit total system performance reports				
QZ	Seal System Performance Calculation Report			★
Conduit electrical connector				
GE[7]	M12, 4-pin, Male Connector (eurofast)			★
GM[7]	A size Mini, 4-pin, Male Connector (minifast)			★
Configuration buttons				
D4[18]	Analog Zero and Span			★
DZ[19]	Digital Zero Trim			★
Transient protection				
T1[7][20]	Transient Protection			★
Software configuration				
C1[19]	Custom Software Configuration (completed CDS 00806-0100-4007 for wired and 00806-0100-4100 for wireless required with order)			★
Low power output				
C2	0.8-3.2 Vdc Output with Digital Signal Based on HART Protocol (available with Output code M only)			
Alarm levels				
C4[18]	NAMUR alarm and saturation levels, high alarm			★
CN[18]	NAMUR alarm and saturation levels, low alarm			★
CR[18]	Custom alarm and saturation signal levels, high alarm (requires C1 and Configuration Data Sheet)			★
CS[18]	Custom alarm and saturation signal levels, low alarm (requires C1 and Configuration Data Sheet)			★
CT[18]	Rosemount Standard low alarm			★
Conduit plug				
DO[7]	316 SST Conduit Plug			★
Ground screw				
V5[7][21]	External Ground Screw Assembly			★
Lower housing flushing connection options				
	Ring material	**Number**	**Size (NPT)**	
F1	316 SST	1	1/4-18 NPT	★
F2	316 SST	2	1/4-18 NPT	★
F3	Alloy C-276	1	1/4-18 NPT	★
F4	Alloy C-276	2	1/4-18 NPT	★
F7	316 SST	1	1/2-14 NPT	★
F8	316 SST	2	1/2-14 NPT	★
F9	Alloy C-276	1	1/2-14 NPT	★
F0	Alloy C-276	2	1/2-14 NPT	★
Lower housing intermediate gasket material				
S0	No Gasket for lower housing			★
SY[22]	Thermo-Tork TN-9000			★

Table 6. Rosemount 3051L Level Transmitter Ordering Information

★ The Standard offering represents the most common options. The starred options (★) should be selected for best delivery.
The Expanded offering is subject to additional delivery lead time.

NACE certificate		
Q15[23]	Certificate of Compliance to NACE MR0175/ISO 15156 for wetted materials	★
Q25[23]	Certificate of Compliance to NACE MR0103 for wetted materials	★
Typical model number: 3051L 2 A A0 D 21 A A F1		

(1) Select Configuration Buttons (option code D4 or DZ) or Local Operator Interface (option code M4) if local configuration buttons are required.

(2) Option HR5 configures the HART output to HART Revision 5. Option HR7 configures the HART output to HART Revision 7. The device can be field configured to HART Revision 5 or 7 if desired. HART Revision 5 is the default HART output.

(3) Option code M4 - LCD Display with Local Operator Interface required for local addressing and configuration.

(4) Requires wireless options and engineered polymer housing. Available approvals are FM Intrinsically Safe, (option code I5), CSA Intrinsically Safe (option code I6), ATEX Intrinsic Safety (option code I1), IECEx Intrinsic Safety (option code I7) and EAC Intrinsic Safety (option code IM).

(5) Only available with C6, E2, E5, I5, K5, KB and E8 approval. Not available with GE, GM, SBS, DA0, M4, D4, DZ, QT, HR5, HR7, CR, CS, CT.

(6) Materials of Construction comply with metallurgical requirements highlighted within NACE MR0175/ISO 15156 for sour oil field production environments. Environmental limits apply to certain materials. Consult latest standard for details. Selected materials also conform to NACE MR0103 for sour refining environments.

(7) Not available with Wireless output (output code X).

(8) Only available with Wireless output (output code X).

(9) Not available with Product certifications options E8, K8, E5, K5, C6, K6, E7, K7, E2, K2, E3, KB, KD.

(10) Only valid with FOUNDATION fieldbus output (output code F).

(11) “Assemble-to” items are specified separately and require a completed model number.

(12) Dust approval not applicable to output code X. See “IEC 62591 (WirelessHART Protocol)” on page 62 for wireless approvals.

(13) Only available with output codes A - 4-20mA HART, F - FOUNDATION fieldbus, and W - PROFIBUS PA. Also only available with G1/2 housing thread types.

(14) Nonincendive certification not provided with Wireless output option code (X).

(15) Only available with product certifications E7, E8, I1, I7, IA, K7, K8, KD, N1, N7.

(16) Not available with FOUNDATION fieldbus (Output Code F) or Wireless output (Output Code X) or Low Power (Output Code M).

(17) Contact an Emerson Process Management representative for availability.

(18) Only available with HART 4-20 mA output (output code A).

(19) Only available with 4-20 mA HART output (Output Code A) and Wireless output (Output Code X).

(20) The T1 option is not needed with FISCO Product Certifications; transient protection is included in the FISCO product certification codes IA, IB, and IE.

(21) The V5 option is not needed with the T1 option; external ground screw assembly is included with the T1 option.

(22) Gasket provided when lower housing is ordered.

(23) NACE compliant wetted materials are identified by Footnote 6.

Specifications

Performance specifications

This product data sheet covers HART, Wireless, FOUNDATION fieldbus, and PROFIBUS PA protocols unless specified.

Conformance to specification [±3σ (Sigma)]

Technology leadership, advanced manufacturing techniques, and statistical process control ensure specification conformance to at least ±3σ.

Reference accuracy

Stated reference accuracy equations include terminal based linearity, hysteresis, and repeatability. For wireless, FOUNDATION fieldbus and PROFIBUS PA devices, use calibrated range in place of span.

Models	Rosemount 3051and *Wireless*HART
3051C Range 5	+/-0.065% of span For spans less than 10:1, accuracy = $\pm\left[0.015 + 0.005\left(\frac{URL}{Span}\right)\right]$% of Span
Ranges 2-4	± 0.04% of span(1) For spans less than 10:1(2), accuracy = $\pm\left[0.015 + 0.005\left(\frac{URL}{Span}\right)\right]$% of Span
Range 1	± 0.10% of span For spans less than 15:1, accuracy = $\pm\left[0.025 + 0.005\left(\frac{URL}{Span}\right)\right]$% of Span
Range 0 (CD)	± 0.10% of span For spans less than 2:1, accuracy = ± 0.05% of URL
3051CA Ranges 1-4	± 0.04% of span(1) For spans less than 10:1, accuracy = $\pm\left[0.0075\left(\frac{URL}{Span}\right)\right]$% of Span
3051T Ranges 1-4	± 0.04% of span(1) For spans less than 10:1, accuracy = $\pm\left[0.0075\left(\frac{URL}{Span}\right)\right]$% of Span
Range 5	± 0.075% of span For spans less than 10:1, accuracy = $\pm\left[0.0075\left(\frac{URL}{Span}\right)\right]$% of Span
3051L Ranges 2-4	± 0.075% of span For spans less than 10:1, accuracy = $\pm\left[0.025 + 0.005\left(\frac{URL}{Span}\right)\right]$% of Span

(1) For output code W and M, ±0.065% span.

(2) For output code F, for span less than 5:1.

Flow performance - flow reference accuracy(1)

3051CFA Annubar Flowmeter		
Ranges 2-3		±1.80% of Flow Rate at 8:1 flow turndown
3051CFC_A Compact Annubar Flowmeter – Annubar Option A		
Ranges 2-3	Uncalibrated	±2.10% of Flow Rate at 8:1 flow turndown
	Calibrated	±1.80% of Flow Rate at 8:1 flow turndown
3051CFC_C Compact Orifice Flowmeter – Conditioning Option C		
Ranges 2-3	β = 0.4	±1.75% of Flow Rate at 8:1 flow turndown
	β = 0.50, 0.65	±1.95% of Flow Rate at 8:1 flow turndown

Flow performance - flow reference accuracy[1]

3051CFC_P Compact Orifice Flowmeter – orifice type option P[2]		
Ranges 2-3	β = 0.4	±2.00% of Flow Rate at 8:1 flow turndown
	β = 0.65	±2.00% of Flow Rate at 8:1 flow turndown
3051CFP Integral Orifice Flowmeter		
Ranges 2-3	β <0.1	±3.00% of Flow Rate at 8:1 flow turndown
	0.1<β <0.2	±1.95% of Flow Rate at 8:1 flow turndown
	0.2<β <0.6	±1.75% of Flow Rate at 8:1 flow turndown
	0.6<β <0.8	±2.15% of Flow Rate at 8:1 flow turndown

(1) Accuracy over range of use is always application dependent. Range 1 flowmeters may experience an additional uncertainty up to 0.9%. Consult your Emerson Process Management Representative for exact specifications.

(2) Applicable to 2-in. to 12-in. line sizes. For smaller line sizes, see the Rosemount DP Flowmeters and Primary Elements PDS (00813-0100-4485).

Total performance

Total performance is based on combined errors of reference accuracy, ambient temperature effect, and static pressure effect at normal operating conditions (70% of span typical reading, 740 psi (51,02 bar) line pressure).

For ±50 °F (28 °C) temperature changes; 0-100% relative humidity, from 1:1 to 5:1 rangedown

Models	Total performance[1]
3051C Ranges 2-5	± 0.14% of span
3051T Ranges 1-4	± 0.14% of span
3051L Ranges 2-4	Use Instrument Toolkit™ or the QZ option to quantify the total performance of a remote seal assembly under operating conditions.

(1) For output code W, F and M, total performance is ±0.15% of span.

Long term stability

Models	Long term stability
3051C Ranges 2-5	±0.2% of URL for 10 years ±50 °F (28 °C) temperature changes, and up to 1000 psi (68,95 bar) line pressure.
3051CD, 3051CG Low/Draft Range Ranges 0-1	±0.2% of URL for 1 year
3051CA Low Range Range 1	±0.2% of URL for 10 years ±50 °F (28 °C) temperature changes, and up to 1000 psi (68,95 bar) line pressure.
3051T Ranges 1-4	±0.2% of URL for 10 years ±50 °F (28 °C) temperature changes, and up to 1000 psi (68,95 bar) line pressure.

Dynamic performance

	4 - 20 mA HART[1]	FOUNDATION fieldbus and PROFIBUS PA protocols[3]	Typical HART transmitter response time
Total Response Time ($T_d + T_c$)[2]:			
3051C Ranges 2-5	100 ms	152 ms	
Range 1	255 ms	307 ms	
Range 0	700 ms	N/A	
3051T	100 ms	152 ms	
3051L	See Instrument Toolkit	See Instrument Toolkit	
Dead Time (Td)	45 ms (nominal)	97 ms	
Update Rate[4]	22 times per second	22 times per second	

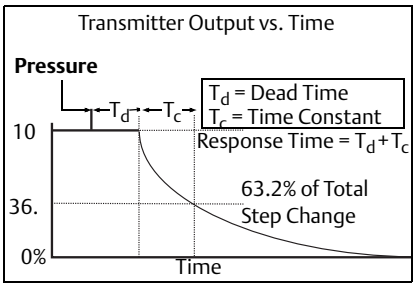

(1) Dead time and update rate apply to all models and ranges; analog output only.

(2) Nominal total response time at 75 °F (24 °C) reference conditions.
(3) Transducer block response time, Analog Input block execution time not included.
(4) Does not apply to wireless (output Code X). See "Wireless (output code X)" on page 52 for wireless update rate.

Line pressure effect per 1000 psi (68,95 bar)

For line pressures above 2000 psi (137,90 bar) and Ranges 4-5, see user manual (Document number 00809-0100-4007 for HART, 00809-0100-4100 for *Wireless*HART, 00809-0100-4774 for FOUNDATION fieldbus, and 00809-0100-4797 for PROFIBUS PA).

Models	Line pressure effect
3051CD, 3051CF	**Zero Error**
Ranges 2-3	±0.05% of URL/1000 psi (68,95 bar) for line pressures from 0 to 2000 psi (0 to 137,90 bar)
Range 1	±0.25% of URL/1000 psi (68,95 bar) for line pressures from 0 to 2000 psi (0 to 137,90 bar)
Range 0	±0.125% of URL/100 psi (6,89 bar) for line pressures from 0 to 750 psi (0 to 51,71 bar)
	Span Error
Ranges 2-3	±0.1% of reading/1000 psi (68,95 bar)
Range 1	±0.4% of reading/1000 psi (68,95 bar)
Range 0	±0.15% of reading/100 psi (68,95 bar)

Ambient temperature effect per 50 °F (28 °C)

Models	Ambient temperature effect
3051C Ranges 2-5	±(0.0125% URL + 0.0625% span) from 1:1 to 5:1 ±(0.025% URL + 0.125% span) from 5:1 to 150:1
Range 1	±(0.1% URL + 0.25% span) from 1:1 to 30:1 ±(0.14% URL + 0.15% span) from 30:1 to 50:1
Range 0	±(0.25% URL + 0.05% span) from 1:1 to 30:1
3051CA Ranges 1-4	±(0.025% URL + 0.125% span) from 1:1 to 30:1 ±(0.035% URL + 0.125% span) from 30:1 to 150:1
3051T Range 2-4	±(0.025% URL + 0.125% span) from 1:1 to 30:1 ±(0.035% URL + 0.125% span) from 30:1 to 150:1
Range 1	±(0.025% URL + 0.125% span) from 1:1 to 10:1 ±(0.05% URL + 0.125% span) from 10:1 to 100:1
Range 5	±(0.1% URL + 0.15% span) from 1:1 to 5:1
3051L	See Instrument Toolkit software.

Mounting position effects

Models	Mounting position effects
3051C	Zero shifts up to ±1.25 inH_2O (3,11 mbar), which can be calibrated out. No span effect.
3051CA, 3051T	Zero shifts up to ±2.5 inH_2O (6,22 mbar), which can be calibrated out. No span effect.
3051L	With liquid level diaphragm in vertical plane, zero shift of up to ±1 inH_2O (2,49 mbar). With diaphragm in horizontal plane, zero shift of up to ±5 inH_2O (12,43 mbar) plus extension length on extended units. All zero shifts can be calibrated out. No span effect.

Vibration effect

Less than ±0.1% of URL when tested per the requirements of IEC60770-1: 1999 field or pipeline with high vibration level (10-60 Hz 0.21 mm displacement peak amplitude / 60-2000 Hz 3g).

Power supply effect

Less than ±0.005% of calibrated span per volt change.

Electromagnetic compatibility (EMC)

Meets all relevant requirements of EN61326-1:2006 and Namur NE-21.(1)

(1) NAMUR NE-21 does not apply to wireless output code X.

Transient protection (option code T1)

Tested in accordance with IEEE C62.41.2-2002, Location Category B

6 kV crest (0.5 μs - 100 kHz)
3 kA crest (8 × 20 μs)
6 kV crest (1.2 × 50 μs)

Functional specifications

Range and sensor limits

Table 7. 3051CD, 3051CG, 3051CF, and 3051L Range and Sensor Limits

Range[1]	Minimum span	Range and sensor limits				
			Lower (LRL)			
	3051CD, 3051CG, 3051CF, 3051L[2]	Upper (URL)	3051CD differential 3051CF Flowmeters	3051CG gage[3]	3051L differential	3051L gage[3]
0	0.10 inH_2O (0,24 mbar)	3.00 inH_2O (7,45 mbar)	-3.00 inH_2O (-7,45 mbar)	N/A	N/A	N/A
1	0.50 inH_2O (1,24 mbar)	25.00 inH_2O (62,16 mbar)	-25.00 inH_2O (-62,16 mbar)	-25.00 inH_2O (-62,16 mbar)	N/A	N/A
2	1.67 inH_2O (4,15 mbar)	250.00 inH_2O (621,60 mbar)	-250.00 inH_2O (-621,60 mbar)	-250.00 inH_2O (-621,60 mbar)	-250.00 inH_2O (-621,60 mbar)	-250.00 inH_2O (-621,60 mbar)
3	6.67 inH_2O (16,58 mbar)	1000.00 inH_2O (2,48 bar)	-1000.00 inH_2O (-2,48 bar)	0.50 psia (34,47 mbar)	-1000.00 inH_2O (-2,48 bar)	0.50 psia (34,47 mbar)
4	2.00 psi (137,89 mbar)	300.00 psi (20,68 bar)	-300.00 psi (-20,68 bar)	0.50 psia (34,47 mbar)	-300.00 psi (-20,68 bar)	0.50 psia (34,47 mbar)
5	13.33 psi (919,01 mbar)	2000.00 psi (137,89 bar)	- 2000.00 psi (-137,89 bar)	0.50 psia (34,47 mbar)	N/A	N/A

(1) Range 0 only available with 3051CD. Range 1 only available with 3051CD, 3051CG, or 3051CF. inH_2O referenced at 68 degrees Fahrenheit.

(2) For outputs options W and M, minimum span are: range 1 - 0.50 inH_2O (1,24 mbar), range 2 - 2.50 inH_2O (6,21 mbar), range 3 - 10.00 inH_2O (24,86 mbar), range 4 - 3.00 psi (0,21 bar), range 5 - 20.00 psi (1,38 bar).

(3) Assumes atmospheric pressure of 14.7 psig.

Table 8. 3051CA and 3051T Range and Sensor Limits

Range	3051CA			Range	3051T			
	Minimum span[1]	Range and sensor limits			Minimum span[1]	Range and sensor limits		Lower[2] (LRL) (gage)
		Upper (URL)	Lower (LRL)			Upper (URL)	Lower (LRL) (absolute)	
1	0.30 psi (20,68 mbar)	30 psia (2,06 bar)	0 psia (0 bar)	1	0.30 psi (20,68 mbar)	30.00 psi (2,06 bar)	0 psia (0 bar)	-14.70 psig (-1,01 bar)
2	1.00 psi (68,94 mbar)	150 psia (10,34 bar)	0 psia (0 bar)	2	1.00 psi (68,94 mbar)	150.00 psi (10,34 bar)	0 psia (0 bar)	-14.70 psig (-1,01 bar)
3	5.33 psi (367,49 mbar)	800 psia (55,15 bar)	0 psia (0 bar)	3	5.33 psi (367,49 mbar)	800.00 psi (55,15 bar)	0 psia (0 bar)	-14.70 psig (-1,01 bar)
4	26.67 psi (1,83 bar)	4000 psia (275,79 bar)	0 psia (0 bar)	4	26.67 psi (1,83 bar)	4000.00 psi (275,79 bar)	0 psia (0 bar)	-14.70 psig (-1,01 bar)
5	N/A	N/A	N/A	5	2000.00 psi (137,89 bar)	10000.00 psi (689,47 bar)	0 psia (0 bar)	-14.70 psig (-1,01 bar)

(1) For output options W and M, minimum span are: range 2 - 1.50 psi(0,10 bar), range 3 - 8.00 psi (0,55 bar), range 4 - 40.00 psi (2,75 bar), range 5 for 3051T - 2000.00 psi (137,89 bar)

(2) Assumes atmospheric pressure of 14.7 psig.

Service

Liquid, gas, and vapor applications

4-20 mA HART (output code A)

Power supply

External power supply required. Standard transmitter (4-20mA) operates on 10.5-42.4 Vdc with no load

Load limitations

Maximum loop resistance is determined by the voltage level of the external power supply described by:

Max. Loop Resistance = 43.5 (Power Supply Voltage – 10.5)

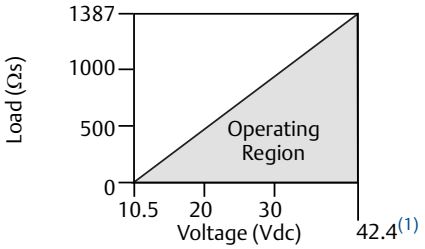

Communication requires a minimum loop resistance of 250 ohms.

(1) For CSA approval, power supply must not exceed 42.4 V.

Indication

Optional two line LCD/LOI Display

Optional configuration buttons

Configuration buttons need to be specified:
Digital Zero trim (option code DZ) changes digital value of the transmitter and is used for performing a sensor zero trim.
Analog Zero Span (option code D4) changes analog value and can be used to rerange the transmitter with an applied pressure.

Output

Two-wire 4-20mA, user selectable for linear or square root output. Digital process variable superimposed on 4-20 mA signal, available to any host that conforms to HART protocol. The 3051 comes with Selectable HART Revisions. Digital communications based on HART Revision 5 (default) or Revision 7 (option code HR7) protocol can be selected. The HART revision can be switched in the field using any HART based configuration tool or the optional local operator interface (M4).

Power advisory diagnostics

Power Advisory Diagnostics pro-actively detect and notify you of degraded electrical loop integrity before it can affect your process operation. Example loop problems that can be detected include water in the terminal compartment, corrosion of terminals, improper grounding, and unstable power supplies.
The Device Dashboard presents the diagnostics in a graphical, task-based interface that provides single-click access to critical process/device information and descriptive graphical troubleshooting.

Local operator interface

The LOI utilizes a 2 button menu with internal and external configuration buttons. Internal buttons are always configured for Local Operator Interface. External Buttons can be configured for either LOI (option code M4), Analog Zero and Span (option code D4) or Digital Zero Trim (option code DZ). See Rosemount 3051 product manual (00809-0100-4007) for LOI configuration menu.

FOUNDATION fieldbus (output code F)

Power supply

External power supply required; transmitters operate on 9.0 to 32.0 V dc transmitter terminal voltage. FISCO transmitters operate on 9.0 to 17.5 V dc.

Current draw

17.5 mA for all configurations (including LCD display option)

Indication

Optional two line LCD display

FOUNDATION fieldbus block execution times

Block	Execution time
Resource	N/A
Sensor and SPM Transducer	N/A
LCD Display	N/A
Analog Input 1, 2	20 milliseconds
PID	25 milliseconds
Input Selector	20 milliseconds
Arithmetic	20 milliseconds
Signal Characterizer	20 milliseconds
Integrator	20 milliseconds
Output Splitter	20 milliseconds
Control Selector	20 milliseconds

FOUNDATION fieldbus parameters

Links	25 (max.)
Virtual Communications Relationships (VCR)	20 (max.)

FOUNDATION fieldbus function blocks (option A01)

Resource block
The resource block contains diagnostic, hardware, and electronics information. There are no linkable inputs or outputs to the Resource Block.

Sensor transducer block
The sensor transducer block contains sensor information and the ability to calibrate the pressure sensor or recall factory calibration.

LCD transducer block
The LCD transducer block is used to configure the LCD display meter.

Analog input block
The analog input (AI) function block processes the measurements from the sensor and makes them available to other function blocks. The output value from the AI block is in engineering units and contains a status indicating the quality of the measurement. The AI Block is widely used for scaling functionality.

Input selector block
The input selector (ISEL) function block can be used to select the first good, hot backup, maximum, minimum, or average of as many as eight input values and place it at the output. The block supports signal status propagation.

Integrator block
The integrator (INT) function block integrates one or two variables over time. The block compares the integrated or accumulated value to pre-trip and trip limits and generates discrete output signals when the limits are reached.
The Integrator Block is used as a totalizer. This block will accept up to two inputs, has six options how to totalize the inputs, and two trip outputs.

Arithmetic block
The arithmetic (ARTH) function block provides the ability to configure a range extension function for a primary input. It can also be used to compute nine different arithmetic functions including flow with partial density compensation, electronic remote seals, hydrostatic tank gaging, ratio control, and others.

Signal characterizer block
The signal characterizer (SGCR) function block characterizes or approximates any function that defines an input/output relationship. The function is defined by configuring as many as twenty X,Y coordinates. The block interpolates an output value for a given input value using the curve defined by the configured coordinates. Two separate analog input signals can be processed simultaneously to give two corresponding separate output values using the same defined curve.

PID block
The PID function block combines all of the necessary logic to perform proportional/integral/derivative (PID) control. The block supports mode control, signal scaling and limiting, feed forward control, override tracking, alarm limit detection, and signal status propagation.

Control selector block
The control selector function block selects one of two or three inputs to be the output. The inputs are normally connected to the outputs of PID or other function blocks. One of the inputs would be considered normal and the other two overrides.

Output splitter block
The output splitter function block provides the capability to drive two control outputs from a single input. It takes the output of one PID or other control block to control two valves or other actuators.

Backup Link Active Scheduler (LAS)

The transmitter can function as a Link Active Scheduler if the current link master device fails or is removed from the segment.

FOUNDATION fieldbus Diagnostics Suite (option code D01)

The 3051C FOUNDATION fieldbus Diagnostics Suite features SPM technology to detect changes in the process, process equipment, or installation conditions (such as plugged impulse lines) of the transmitter. This is done by modeling the process noise signature (using the statistical values of mean and standard deviation) under normal conditions and then comparing the baseline values to current values over time. If a significant change in the current values is detected, the transmitter can generate an alert.

PROFIBUS PA (output code W)

Profile version

3.02

Power supply

External power supply required; transmitters operate on 9.0 to 32.0 V dc transmitter terminal voltage. FISCO transmitters operate on 9.0 to 17.5 V dc.

Current draw

17.5 mA for all configurations (including LCD display option)

Output update rate

Four times per second

Standard function blocks

Analog input (AI block)
The AI function block processes the measurements and makes them available to the host device. The output value from the AI block is in engineering units and contains a status indicating the quality of the measurement.

Physical block
The physical block defines the physical resources of the device including type of memory, hardware, electronics and diagnostic information.

Transducer block
Contains actual sensor measurement data including the sensor diagnostics and the ability to trim the pressure sensor or recall factory defaults.

Indication

Optional 2-line LCD display

Local operator interface

The LOI utilizes a 2 button menu with external configuration buttons.

Wireless (output code X)

Output

IEC 62591 (*Wireless*HART), 2.4 GHz DSSS

Wireless radio (internal antenna, WP5 option)

- Frequency: 2.400 - 2.485 GHz
- Channels: 15
- Modulation: IEEE 802.15.4 compliant DSSS
- Transmission: Maximum of 10 dBm EIRP

Local display

The optional 3-line, 7-digit LCD display can display user-selectable information such as primary variable in engineering units, scaled variable, percent of range, sensor module temperature, and electronics temperature. The display updates based on the wireless update rate.

Digital zero trim

Digital Zero trim (option DZ) is an offset adjustment to compensate for mounting position effects, up to 5% of URL.

Update rate

User selectable 1 sec. to 60 min.

Wireless sensor module for in-line transmitters

The 3051 Wireless transmitter requires the engineered polymer housing to be selected. The standard sensor module will come with aluminum material. If stainless steel is required, the option WSM must be selected.

Power module

Field replaceable, keyed connection eliminates the risk of incorrect installation, Intrinsically Safe Lithium-thionyl chloride Power Module with PBT/PC enclosure. Ten-year life at one minute update rate.(1)

(1) Reference conditions are 70 °F (21 °C), and routing data for three additional network devices.

Note: Continuous exposure to ambient temperature limits of -40 °F or 185 °F (-40 °C or 85 °C) may reduce specified life by less than 20 percent.

Low power output

1-5 Vdc HART Low Power (output code M)

Output

Three-wire 1-5 Vdc (option code C2) user-selectable output. Also user selectable for linear or square root output configuration. Digital process variable superimposed on voltage signal, available to any host conforming to the HART protocol. Low-power transmitter operates on 6-12 Vdc with no load.

Power consumption

3.0 mA, 18-36 mW

Minimum load impedance

100 kΩ (V_{out} wiring)

Indication

Optional 5-digit LCD display

Overpressure limits

Rosemount 3051CD/CG/CF

- Range 0: 750 psi (51,71 bar)
- Range 1: 2000 psig (137,90 bar)
- Ranges 2-5: 3626 psig (250,00 bar)
  4500 psig (310,26 bar) for option code P9

Rosemount 3051CA

- Range 1: 750 psia (51,71 bar)
- Range 2: 1500 psia (103,42 bar)
- Range 3: 1600 psia (110,32 bar)
- Range 4: 6000 psia (413,69 bar)

Rosemount 3051TG/TA

- Range 1: 750 psi (51,71 bar)
- Range 2: 1500 psi (103,42 bar)
- Range 3: 1600 psi (110,32 bar)
- Range 4: 6000 psi (413,69 bar)
- Range 5: 15000 psi (1034,21 bar)

For 3051L or Level Flange Option Codes FA, FB, FC, FD, FP, and FQ, limit is 0 psia to the flange rating or sensor rating, whichever is lower.

Table 9. 3051L and Level Flange Rating Limits

Standard	Type	CS rating	SST rating
ANSI/ASME	Class 150	285 psig	275 psig
ANSI/ASME	Class 300	740 psig	720 psig
ANSI/ASME	Class 600	1480 psig	1440 psig
At 100 °F (38 °C), the rating decreases with increasing temperature, per ANSI/ASME B16.5.			
DIN	PN 10-40	40 bar	40 bar
DIN	PN 10/16	16 bar	16 bar
DIN	PN 25/40	40 bar	40 bar
At 248 °F (120 °C), the rating decreases with increasing temperature, per DIN 2401.			

Static pressure limit

Rosemount 3051CD only

Operates within specifications between static line pressures of 0.5 psia and 3626 psig (4500 psig (310, 26 bar) for Option Code P9).

Range 0: 0.5 psia and 750 psig (0,03 bar and 51,71 bar)

Range 1: 0.5 psia and 2000 psig (0,03 bar and 137, 90 bar)

Burst pressure limits

3051C, 3051CF Coplanar or traditional process flange

10081 psig (695,06 bar)

3051T In-Line

Ranges 1-4: 11016 psi (759,53 bar)
Range 5: 26016 psig (1793,74 bar)

Failure mode alarm

HART 4-20 mA (output option code A)

If self-diagnostics detect a sensor or microprocessor failure, the analog signal is driven either high or low to alert the user. High or low failure mode is user-selectable with a jumper/switch on the transmitter. The values to which the transmitter drives its output in failure mode depend on whether it is configured to *standard, NAMUR-compliant,* or custom levels (see Alarm Configuration below). The values for each are as follows:

	High alarm	Low alarm
Default	≥ 21.75 mA	≤ 3.75 mA
NAMUR compliant[1]	≥ 22.5 mA	≤ 3.6 mA
Custom levels[2]	20.2 - 23.0 mA	3.4 - 3.8 mA

(1) Analog output levels are compliant with NAMUR recommendation NE 43, see option codes C4 or C5.

(2) Low alarm must be 0.1 mA less than low saturation and high alarm must be 0.1 mA greater than high saturation.

Output code M

If self-diagnostics detect a gross transmitter failure, the analog signal will be driven either below 0.94 V or above 5.4 V to alert the user (below 0.75 V or above 4.4 V for Option C2). High or low alarm signal is user-selectable by internal jumper.

Output code F, W, and X

If self-diagnostics detect a gross transmitter failure, that information gets passed as an alert and a status along with the process variable.

Temperature limits

Ambient

-40 to 185 °F (-40 to 85 °C)
With LCD display[1][2]: -40 to 176 °F (-40 to 80 °C)

(1) For the output code M and W, LCD display may not be readable and LCD display updates will be slower at temperatures below -22 °F (-30 °C).

(2) Wireless LCD display may not be readable and LCD display updates will be slower at temperature below -4 °F (-20 °C).

Storage[1]

-50 to 230 °F (-46 to 110 °C)
With LCD display: -40 to 185 °F (-40 to 85 °C)
With Wireless Output: -40 °F to 185 °F (-40 °C to 85 °C)

(1) If storage temperature is above 85°C, perform a sensor trim prior to installation.

Process

At atmospheric pressures and above. See Table 10.

Table 10. 3051 Process Temperature Limits

3051CD, 3051CG, 3051CF, 3051CA	
Silicone Fill Sensor[1]	
with Coplanar Flange	–40 to 250 °F (–40 to 121 °C)[2]
with Traditional Flange	–40 to 300 °F (–40 to 149 °C)[2][3]
with Level Flange	–40 to 300 °F (–40 to 149 °C)[2]
with 305 Integral Manifold	–40 to 300 °F (–40 to 149 °C)[2]
Inert Fill Sensor[1][4]	–40 to 185 °F (–40 to 85 °C)[5][6]
3051T (process fill fluid)	
Silicone Fill Sensor[1]	–40 to 250 °F (–40 to 121 °C)[2]
Inert Fill Sensor[1]	–22 to 250 °F (–30 to 121 °C)[2]
3051L low-side temperature limits	
Silicone Fill Sensor[1]	–40 to 250 °F (–40 to 121 °C)[2]
Inert Fill Sensor[1]	-40 to 185 °F (–40 to 85 °C)[5]
3051L high-side temperature limits (process fill fluid)	
SYLTHERM XLT	–102 to 293 °F (–75 to 145 °C)
D.C. Silicone 704®	32 to 401 °F (0 to 205 °C)
D.C. Silicone 200	–49 to 401 °F (–45 to 205 °C)
Inert	–49 to 320 °F (–45 to 160 °C)
Glycerin and Water	5 to 203 °F (–15 to 95 °C)
Neobee M-20	5 to 401 °F (–15 to 205 °C)
Propylene Glycol and Water	5 to 203 °F (–15 to 95 °C)

(1) Process temperatures above 185 °F (85 °C) require derating the ambient limits by a 1.5:1 ratio.

(2) 220 °F (104 °C) limit in vacuum service; 130 °F (54 °C) for pressures below 0.5 psia.

(3) 3051CD0 process temperature limits are –40 to 212 °F (–40 to 100 °C).

(4) Inert fill with traditional flange on Range 0: limits are 32 to 185°F (0 to 85°C).

(5) 160 °F (71 °C) limit in vacuum service.

(6) Not available for 3051CA.

Humidity limits

0–100% relative humidity

Turn-on time

Performance within specifications less than 2.0 seconds (20.0 seconds for PROFIBUS PA and FOUNDATION fieldbus protocols) after power is applied to the transmitter.[1]

(1) Does not apply to wireless option code X.

Volumetric displacement

Less than 0.005 in^3 (0,08 cm^3)

Damping

4-20 mA HART

Analog output response to a step input change is user-enterable from 0.0 to 60 seconds for one time constant. This software damping is in addition to sensor module response time.

FOUNDATION fieldbus

Transducer block: User configurable
AI Block: User configurable

PROFIBUS PA

AI Block only: User configurable

Physical specifications

Material selection

Emerson provides a variety of Rosemount products with various product options and configurations including materials of construction that can be expected to perform well in a wide range of applications. The Rosemount product information presented is intended as a guide for the purchaser to make an appropriate selection for the application. It is the purchaser's sole responsibility to make a careful analysis of all process parameters (such as all chemical components, temperature, pressure, flow rate, abrasives, contaminants, etc.), when specifying product materials, options, and components for the particular application. Emerson Process Management is not in a position to evaluate or guarantee the compatibility of the process fluid or other process parameters with the product options, configuration, or materials of construction selected.

Electrical connections

$^1/_2$–14 NPT, G$^1/_2$, and M20 × 1.5 conduit. The polymer housing (housing code P) has no conduit entries. HART interface connections fixed to terminal block for output code A and to 701P Power Module for Output Code X.

Process connections

Rosemount 3051C

$^1/_4$–18 NPT on 2$^1/_8$-in. centers
$^1/_2$–14 NPT on 2-, 2$^1/_8$-, or 2$^1/_4$-in. centers

Rosemount 3051L

High pressure side: 2-, 3-, or 4-in., ASME B 16.5 (ANSI) Class 150, 300 or 600 flange; 50, 80 or 100 mm, PN 40 or 10/16 flange
Low pressure side: $^1/_4$–18 NPT on flange $^1/_2$–14 NPT on adapter

Rosemount 3051T

$^1/_2$–14 NPT female.
G$^1/_2$A DIN 16288 Male (Range 1–4 only)
Autoclave type F-250-C (Pressure relieved $^9/_{16}$–18 gland thread; $^1/_4$ OD high pressure tube 60° cone; available in SST for Range 5 transmitters only).

Rosemount 3051CF

For 3051CFA, see 00813-0100-4485 Rosemount 485 Annubar
For 3051CFC, see 00813-0100-4485 Rosemount 405 Compact Orifice Plate
For 3051CFP, see 00813-0100-4485 Rosemount 1195 Integral Orifice

Process-wetted parts

Drain/vent valves

316 SST, Alloy C-276, or Alloy 400 material (Alloy 400 not available with 3051L)

Process flanges and adapters

Plated carbon steel
SST: CF-8M (Cast 316 SST) per ASTM A743
Cast C-276: CW-12MW per ASTM A494
Cast Alloy 400: M-30C per ASTM A494

Wetted O-rings

Glass-filled PTFE or Graphite-filled PTFE

Process isolating diaphragms

Isolating diaphragm material	3051CD 3051CG	3051T	3051CA
316L SST (UNS S31603)	•	•	•
Alloy C-276 (UNS N10276)	•	•	•
Alloy 400 (UNS N04400)	•		•
Tantalum (UNS R05440)	•		
Gold-plated Alloy 400	•		•
Gold-plated 316L SST	•		•

Rosemount 3051L process wetted parts

Flanged process connection (transmitter high side)

Process diaphragms, including process gasket surface
316L SST, Alloy C-276, or Tantalum

Extension
CF-3M (Cast version of 316L SST, material per ASTM-A743), or Alloy C-276. Fits schedule 40 and 80 pipe.

Mounting flange
Zinc-cobalt plated CS or SST

Reference process connection (transmitter low side)

Isolating diaphragms
316L SST or Alloy C-276

Reference flange and adapter
CF-8M (Cast version of 316 SST, material per ASTM-A743)

Non-wetted parts

Electronics housing

Low-copper aluminum or CF-8M (Cast version of 316 SST).
Enclosure Type 4X, IP 65, IP 66, IP 68
Housing Material Code P: PBT/PC with NEMA 4X and IP66/67/68

Coplanar sensor module housing

SST: CF-3M (Cast 316L SST)

Bolts

Plated carbon steel per ASTM A449, Type 1
Austenitic 316 SST per ASTM F593
ASTM A193, Grade B7M alloy steel
Alloy K-500

Sensor module fill fluid

Coplanar: silicone or Inert Halocarbon
In-line: silicone or Fluorinert™ FC-43

Process fill fluid (3051L only)

SYLTHERM XLT, D.C. Silicone 704, D.C. Silicone 200, inert, glycerin and water, Neobee M-20, or propylene glycol and water

Paint

Polyurethane

Cover O-rings

Buna-N
Silicone (for wireless option code X)

Power module

Field replaceable, keyed connection eliminates the risk of incorrect installation, Intrinsically Safe Lithium-thionyl chloride Power Module with PBT enclosure.

Shipping weights

Table 11. Transmitter Weights without Options(1)

Transmitter	Rosemount 3051 In lb. (kg)	Wireless In lb. (kg)
3051C	6.0 (2,7)	3.9 (1,8)
3051T	3.0 (1,4)	1.9 (0,86)
3051L	Table 12	Table 12

(1) Transmitter weights include the sensor module and housing only (aluminum for Rosemount 3051 and polymer for wireless).

Table 12. 3051L Weights without Options

Flange	Flush lb. (kg)	2-in. Ext. lb. (kg)	4-in. Ext. lb. (kg)	6-in. Ext. lb. (kg)
2-in., 150	12.5 (5,7)	N/A	N/A	N/A
3-in., 150	17.5 (7,9)	19.5 (8,8)	20.5 (9,3)	21.5 (9,7)
4-in., 150	23.5 (10,7)	26.5 (12,0)	28.5 (12,9)	30.5 (13,8)
2-in., 300	17.5 (7,9)	N/A	N/A	N/A
3-in., 300	22.5 (10,2)	24.5 (11,1)	25.5 (11,6)	26.5 (12,0)
4-in., 300	32.5 (14,7)	35.5 (16,1)	37.5 (17,0)	39.5 (17,9)
2-in., 600	15.3 (6,9)	N/A	N/A	N/A
3-in., 600	25.2 (11,4)	27.2 (12,3)	28.2 (12,8)	29.2 (13,2)
DN 50/PN 40	13.8 (6,2)	N/A	N/A	N/A
DN 80/PN 40	19.5 (8,8)	21.5 (9,7)	22.5 (10,2)	23.5 (10,6)
DN 100/ PN 10/16	17.8 (8,1)	19.8 (9,0)	20.8 (9,5)	21.8 (9,9)
DN 100/ PN 40	23.2 (10,5)	25.2 (11,5)	26.2 (11,9)	27.2 (12,3)

Table 12. 3051L Weights without Options

Flange	Flush lb. (kg)	2-in. Ext. lb. (kg)	4-in. Ext. lb. (kg)	6-in. Ext. lb. (kg)
DN 80/PN 40	19.5 (8,8)	21.5 (9,7)	22.5 (10,2)	23.5 (10,6)
DN 100/ PN 10/16	17.8 (8,1)	19.8 (9,0)	20.8 (9,5)	21.8 (9,9)
DN 100/ PN 40	23.2 (10,5)	25.2 (11,5)	26.2 (11,9)	27.2 (12,3)

Table 13. Transmitter Option Weights

Code	Option	Add lb. (kg)
J, K, L, M	Stainless Steel Housing (T)	3.9 (1,8)
J, K, L, M	Stainless Steel Housing (C, L, H, P)	3.1 (1,4)
M4/M5	LCD display for wired transmitter	0.5 (0,2)
M5	LCD Display for Wireless Output	0.1 (0,04)
B4	SST Mounting Bracket for Coplanar Flange	1.0 (0,5)
B1, B2, B3	Mounting Bracket for Traditional Flange	2.3 (1,0)
B7, B8, B9	Mounting Bracket for Traditional Flange	2.3 (1,0)
BA, BC	SST Bracket for Traditional Flange	2.3 (1,0)
H2	Traditional Flange	2.4 (1,1)
H3	Traditional Flange	2.7 (1,2)
H4	Traditional Flange	2.6 (1,2)
H7	Traditional Flange	2.5 (1,1)
FC	Level Flange—3 in., 150	10.8 (4,9)
FD	Level Flange—3 in., 300	14.3 (6,5)
FA	Level Flange—2 in., 150	10.7 (4,8)
FB	Level Flange—2 in., 300	14.0 (6,3)
FP	DIN Level Flange, SST, DN 50, PN 40	8.3 (3,8)
FQ	DIN Level Flange, SST, DN 80, PN 40	13.7 (6,2)
WSM	SST Sensor Module	1.0 (0,45)
	Power Module (701PGNKF)	0.4 (0,18)

3051 Product Certifications

European Directive Information

A copy of the EC Declaration of Conformity can be found at the end of the Quick Start Guide. The most recent revision of the EC Declaration of Conformity can be found at www.rosemount.com.

Ordinary Location Certification for FM Approvals

As standard, the transmitter has been examined and tested to determine that the design meets the basic electrical, mechanical, and fire protection requirements by FM Approvals, a nationally recognized test laboratory (NRTL) as accredited by the Federal Occupational Safety and Health Administration (OSHA).

North America

E5 FM Explosionproof (XP) and Dust-Ignitionproof (DIP)
Certificate: 0T2H0.AE

Standards: FM Class 3600 – 1998, FM Class 3615 – 2006, FM Class 3810 – 2005, ANSI/NEMA 250 – 2003

Markings: XP CL I, DIV 1, GP B, C, D; DIP CL II, DIV 1, GP E, F, G; CL III; T5(-50°C ≤ Ta ≤ +85°C); Factory Sealed; Type 4X

I5 FM Intrinsic Safety (IS) and Nonincendive (NI)
Certificate: 1Q4A4.AX

Standards: FM Class 3600 – 2011, FM Class 3610 – 2010, FM Class 3611 – 2004, FM Class 3810 – 2005

Markings: IS CL I, DIV 1, GP A, B, C, D; CL II, DIV 1, GP E, F, G; Class III; DIV 1 when connected per Rosemount drawing 03031-1019; NI CL 1, DIV 2, GP A, B, C, D; T4(-50°C ≤ Ta ≤ +70°C) [HART], T5(-50°C ≤ Ta ≤ +40°C) [HART]; T4(-50°C ≤ Ta ≤ +60°C) [Fieldbus/PROFIBUS]; Type 4x

Special Conditions for Safe Use (X):

1. The Model 3051 transmitter housing contains aluminum and is considered a potential risk of ignition by impact or friction. Care must be taken into account during installation and use to prevent impact and friction.
2. The Model 3051 transmitter with the transient terminal block (Option code T1) will not pass the 500Vrms dielectric strength test and this must be taken into account during installation.

IE FM FISCO
Certificate: 1Q4A4.AX

Standards: FM Class 3600 – 2011, FM Class 3610 – 2010, FM Class 3611 – 2004, FM Class 3810 – 2005

Markings: IS CL I, DIV 1, GP A, B, C, D when connected per Rosemount drawing 03031-1019 (-50°C ≤ Ta ≤ +60°C); Type 4x

Special Conditions for Safe Use (X):

1. The Model 3051 transmitter housing contains aluminum and is considered a potential risk of ignition by impact or friction. Care must be taken into account during installation and use to prevent impact and friction.
2. The Model 3051 transmitter with the transient terminal block (Option code T1) will not pass the 500Vrms dielectric strength test and this must be taken into account during installation.

C6 CSA Explosionproof, Dust-Ignitionproof, Intrinsic Safety and Nonincendive
Certificate: 1053834

Standards: ANSI/ISA 12.27.01-2003, CSA Std. C22.2 No. 30 -M1986, CSA Std. C22.2 No.142-M1987, CSA Std. C22.2. No.157-92, CSA Std. C22.2 No. 213 - M1987, CAN/CSA C22.2 No. 0-10, CSA Std C22.2 No. 25-1966, CAN/CSA-C22.2 No. 94-M91, CAN/CSA-E60079-0-07, CAN/CSA-E60079-1-07

Markings: Explosionproof for Class I, Division 1, Groups B, C and D; Suitable for Class I, Zone 1, Group IIB+H2, T5; Dust-Ignitionproof Class II, Division 1, Groups E, F, G; Class III Division 1; Intrinsically Safe Class I, Division 1 Groups A, B, C, D when connected in accordance with Rosemount drawing 03031-1024, Temperature Code T3C; Suitable for Class I, Zone 0; Class I Division 2 Groups A, B, C and D, T5; Suitable for Class I Zone 2, Group IIC; Type 4X; Factory Sealed; Single Seal (See drawing 03031-1053)

E6 CSA Explosionproof, Dust-Ignitionproof and Division 2
Certificate: 1053834

Standards: ANSI/ISA 12.27.01-2003, CSA Std. C22.2 No. 30 -M1986, CSA Std. C22.2 No.142-M1987, CSA Std. C22.2 No. 213 - M1987, CAN/CSA C22.2 No. 0-10, CSA Std C22.2 No. 25-1966, CAN/CSA-C22.2 No. 94-M91, CAN/CSA-C22.2 No. 157-92, CAN/CSA-E60079-0-07, CAN/CSA-E60079-1-07

Markings: Explosionproof Class I, Division 1, Groups B, C and D; Suitable for Class I, Zone 1, Group IIB+H2, T5; Dust-Ignitionproof for Class II and Class III, Division 1, Groups E, F and G; Class I, Division 2, Groups A, B, C and D; Suitable for Class I Zone 2, Group IIC; Type 4X; Factory Sealed; Single Seal (See drawing 03031-1053)

hazardous location. When used in combustible dust environment, cable entry in accordance with IP66 or higher level should be applied.

4. Obey the warning "Keep tight when the circuit is alive."
5. End users are not permitted to change any internal components.
6. During installation, use and maintenance of this product, observe the following standards:
   GB3836.13-1997 "Electrical apparatus for explosive gas atmospheres Part 13: Repair and overhaul for apparatus used in explosive gas atmospheres"
   GB3836.15-2000 "Electrical apparatus for explosive gas atmospheres Part 15: Electrical installations in hazardous area (other than mines)"
   GB3836.16-2006 "Electrical apparatus for explosive gas atmospheres Part 16: Inspection and maintenance of electrical installation (other than mines)"
   GB50257-1996 "Code for construction and acceptance of electric device for explosion atmospheres and fire hazard electrical equipment installation engineering".
   GB12476.2-2006 "Electrical apparatus for use in the presence of combustible dust Part 1-2: Electrical apparatus protected by enclosures and surface temperature limitation-Selection, installation and maintenance"
   GB15577-2007 "Safety regulations for dust explosion prevention and protection"

I3 China Intrinsic Safety

Certificate: GYJ13.1362X; GYJ101312X [Flowmeters]

Standards: GB3836.1-2010, GB3836.4-2010, GB3836.20-2010, GB12476.1-2000

Markings: Ex ia IIC Ga T4/T5

Special Conditions for Safe Use (X):

1. Symbol "X" is used to denote specific conditions of use:
   a. If the apparatus is fitted with an optional 90V transient suppressor, it is not capable of withstanding the 500V insulation test for 1 minute. This must be taken into account when installing the apparatus.
   b. The enclosure may be made of aluminum alloy and given a protective polyurethane paint finish; however, care should be taken to protect it from impact or abrasion if located in Zone 0.
2. The relation between T code and ambient temperature range is:

Model	T code	Temperature range
HART	T5	-60°C ≤ Ta ≤ +40°C
HART	T4	-60°C ≤ Ta ≤ +70°C
Fieldbus/PROFIBUS/FISCO	T4	-60°C ≤ Ta ≤ +60°C
Flowmeter with 644 Temp Housing	T4	-40°C ≤ Ta ≤ +60°C

3. Intrinsically Safe parameters:
   Input parameters

	HART	Fieldbus/PROFIBUS	FISCO
Voltage U_i	30 V	30 V	17.5 V
Current I_i	200 mA	300 mA	380 mA
Power P_i	0.9 W	1.3 W	5.32 W
Capacitance C_i	0.012 µF	0 µF	<5 nF
Inductance L_i	0 mH	0 mH	<10 µH

   Note 1: FISCO parameters apply to both Group IIC and IIB.
   Note 2: [For Flowmeters] When 644 Temperature Transmitter is used, it should be used with Ex-certified associated apparatus to establish explosion protection system that can be used in explosive gas atmospheres. Wiring and terminals should comply with the instruction manual of both 644 Temperature Transmitter and associated apparatus. The cables between 644 Temperatures Transmitter and associated apparatus should be shielded cables (the cables must have insulated shield). The shielded cable has to be grounded reliably in a non-hazardous area.
4. Transmitters comply with the requirements for FISCO field devices specified in IEC60079-27:2008. For the connection of an intrinsically safe circuit in accordance with FISCO Model, FISCO parameters are listed in the table above.
5. The product should be used with Ex-certified associated apparatus to establish explosion protection system that can be used in explosive gas atmospheres. Wiring and terminals should comply with the instruction manual of the product and associated apparatus.
6. The cables between this product and associated apparatus should be shielded cables (the cables must have insulated shield). The shielded cable has to be grounded reliably in a non-hazardous area.
7. End users are not permitted to change any intern components but to settle the problem in conjunction with the manufacturer to avoid damage to the product.
8. During installation, use and maintenance of this product, observe the following standards:
   GB3836.13-1997 "Electrical apparatus for explosive gas atmospheres Part 13: Repair and overhaul for apparatus used in explosive gas atmospheres"
   GB3836.15-2000 "Electrical apparatus for explosive gas atmospheres Part 15: Electrical installations in hazardous area (other than mines)"
   GB3836.16-2006 "Electrical apparatus for explosive gas atmospheres Part 16: Inspection and maintenance of electrical installation (other than mines)"
   GB50257-1996 "Code for construction and acceptance of electric device for explosion atmospheres and fire hazard electrical equipment installation engineering".
   GB12476.2-2006 "Electrical apparatus for use in the presence of combustible dust Part 1-2: Electrical apparatus protected by enclosures and surface temperature

Thread Adapter Thread Sizes

Male thread	Identification mark
M20 x 1.5 – 6H	M20
1/2 - 14 NPT	1/2 – 14 NPT
3/4 - 14 NPT	3/4 – 14 NPT
Female thread	**Identification mark**
M20 x 1.5 – 6H	M20
1/2 - 14 NPT	1/2 – 14 NPT
PG 13.5	PG 13.5

Special Conditions for Safe Use (X):

1. When the thread adapter or blanking plug is used with an enclosure in type of protection increased safety "e" the entry thread shall be suitably sealed in order to maintain the ingress protection rating (IP) of the enclosure.
2. The blanking plug shall not be used with an adapter.
3. Blanking Plug and Threaded Adapter shall be either NPT or Metric thread forms. G½ and PG 13.5 thread forms are only acceptable for existing (legacy) equipment installations.

Additional Certifications

SBS American Bureau of Shipping (ABS) Type Approval

Certificate: 09-HS446883A-PDA

Intended Use: Measure gauge or absolute pressure of liquid, gas or vapor applications on ABS classed vessels, marine, and offshore installations.

ABS Rules: 2014 Steel Vessels Rules 1-1-4/7.7, 4-8-3/13.1, 1-1-A3, 4-8-3/1.7, 4-8-3/1.11.1

SBV Bureau Veritas (BV) Type Approval

Certificate: 23155/A3 BV

Requirements: Bureau Veritas Rules for the Classification of Steel Ships

Application: Class notations: AUT-UMS, AUT-CCS, AUT-PORT and AUT-IMS; Pressure transmitter type 3051 cannot be installed on diesel engines

SDN Det Norske Veritas (DNV) Type Approval

Certificate: A-13245

Intended Use: Det Norske Veritas' Rules for Classification of Ships, High Speed & Light Craft and Det Norske Veritas' Offshore Standards

Application:

Location classes	
Type	3051
Temperature	D
Humidity	B
Vibration	A
EMC	B
Enclosure	D

SLL Lloyds Register (LR) Type Approval

Certificate: 11/60002

Application: Environmental categories ENV1, ENV2, ENV3 and ENV5

C5 Custody Transfer - Measurement Canada Accuracy Approval

Certificate: AG-0226; AG-0454; AG-0477

IEC 62591 (*Wireless*HART Protocol)

Approved Manufacturing Locations

Rosemount Inc. — Chanhassen, Minnesota USA
Fisher-Rosemount GmbH & Co. — Wessling, Germany
Emerson Process Management Asia Pacific Private Limited — Singapore
Beijing Rosemount Far East Instrument Co., LTD — Beijing, China

European Directive Information

The most recent revision of the EC declaration of conformity can be found at www.rosemount.com.

Telecommunication Compliance

All wireless devices require certification to ensure that they adhere to regulations regarding the use of the RF spectrum. Nearly every country requires this type of product certification. Emerson is working with governmental agencies around the world to supply fully compliant products and remove the risk of violating country directives or laws governing wireless device usage.

FCC and IC

This device complies with Part 15 of the FCC Rules. Operation is subject to the following conditions: This device may not cause harmful interference. This device must accept any interference received, including interference that may cause undesired operation. This device must be installed to ensure a minimum antenna separation distance of 20 cm from all persons.

Ordinary Location Certification for FM

As standard, the transmitter has been examined and tested to determine that the design meets basic electrical, mechanical, and fire protection requirements by FM, a nationally recognized testing laboratory (NRTL) as accredited by the Federal Occupational Safety and Health Administration (OSHA).

North American Certifications

Factory Mutual (FM) approvals

I5 FM Intrinsically Safe
Certificate No: 3046325
Applicable Standards: Class 3600:2011, Class 3610:2010, Class 3810: 2005, ANSI/ISA 60079-0 2009,ANSI/ISA 60079-11:2009
ANSI/NEMA 250:2003, ANSI/IEC 60529:2004
Markings: Intrinsically Safe for Class I, Division I, Groups A, B, C, D
Zone Marking: Class I Zone 0, AEx ia IIC
T4 (-40 °C to 70 °C)
Intrinsically Safe when installed according to Rosemount Drawing 03031-1062
Enclosure Type 4X/IP66/IP68/IP67

Special Conditions for Safe Use (X):

1. The inline pressure sensor may contain more than 10% aluminum and is considered a potential risk of ignition by impact or friction. Care must be taken into account during installation and use to prevent impact and friction.
2. The surface resistivity of the transmitter is greater than one gigaohm. To avoid electrostatic charge build-up, it must not be rubbed or cleaned with solvents or a dry cloth.
3. The Model 3051 Wireless Pressure Transmitter shall only be used with the 701PGNKF Rosemount SmartPower Battery Pack.

CSA - Canadian Standards Association

I6 CSA Intrinsically Safe
Certificate No: 2526009
Applicable Standards: CSA C22.2 No. 0-M91, CSA C22.2 No. 94-M91, CSA C22.2 No. 142-M1987, CSA C22.2 No. 157-92, CSA C22.2 No. 60529-05
Markings: Intrinsically Safe For Class I, Division I, Groups A, B, C, D
T4 (-40 °C to 70 °C)
Intrinsically safe when installed according to Rosemount drawing 03031-1063
Enclosure Type 4X/IP66/IP68

European Certifications

I1 ATEX Intrinsic Safety
Certificate No: Baseefa12ATEX0228X
Applicable Standards: EN60079-11:2012, EN60079-0:2012
Markings: Ex ia IIC T4 Ga (-40 °C ≤ Ta ≤ 70 °C)
 II 1G
IP66/68
CE 1180

Special Conditions for Safe Use (X):

1. The plastic enclosure may constitute a potential electrostatic ignition risk and must not be rubbed or cleaned with a dry cloth.

I7 IECEx Intrinsic Safety
Certificate No: IECEx BAS 12.0124X
Applicable Standards: IEC60079-11:2011, IEC60079-0:2011
Markings: Ex ia IIC T4 Ga (-40 °C ≤ Ta ≤ 70 °C)
IP66/68

Special Conditions for Safe Use (X):

1. The plastic enclosure may constitute a potential electrostatic ignition risk and must not be rubbed or cleaned with a dry cloth.
2. The Model 701PGNKF Power Module may be replaced in a hazardous area. The Power Module has a surface resistivity greater than 1GΩ and must be properly installed in the wireless device enclosure. Care must be taken during transportation to and from the point of installation to prevent electrostatic charge build-up.

Pipe I.D. Range Codes

For pipes with an Inner Diameter (I.D.) Range/Pipe Wall Thickness not found in this table or with a line size greater than 12-in. (300 mm), choose option code Z and specify the exact pipe dimensions (I.D. and Pipe Wall Thickness) on the Configuration Data Sheet (see document number 00806-0100-4010). The Emerson Process Management sizing program will determine this code, based on the application piping.

	Line size			I.D. range	Pipe wall thickness		I.D. range code
	Nominal	Max. O.D.	Option code		ANSI pipes	Non-ANSI pipes	
	2-in. (50 mm)	2.625-in. (66.68 mm)	020	1.784 to 1.841-in. (45.31 to 46.76 mm)	0.065 to 0.545-in. (1.7 to 13.8 mm)	0.065 to 0.488-in. (1.7 to 12.4 mm)	A
				1.842 to 1.938-in. (46.79 to 49.23 mm)		0.065 to 0.449-in. (1.7 to 11.4 mm)	B
				1.939 to 2.067-in. (49.25 to 52.50 mm)		0.065 to 0.417-in. (1.7 to 10.6 mm)	C
				2.068 to 2.206-in. (52.53 to 56.03 mm)		0.065 to 0.407-in. (1.7 to 10.3 mm)	D
	2 1/2-in. (63.5 mm)	3.188-in. (80.98 mm)	025	2.207 to 2.322-in. (56.06 to 58.98 mm)	0.083 to 0.563-in. (2.1 to 14.3 mm)	0.083 to 0.448-in. (2.1 to 11.4 mm)	B
				2.323 to 2.469-in. (59.00 to 62.71 mm)		0.083 to 0.417-in. (2.1 to 10.6 mm)	C
				2.470 to 2.598-in. (62.74 to 65.99 mm)		0.083 to 0.435-in. (2.1 to 11.0 mm)	D
				2.599 to 2.647-in. (66.01 to 67.23 mm)		0.083 to 0.515-in. (2.1 to 13.1 mm)	E
	3-in. (80 mm)	3.75-in. (95.25 mm)	030	2.648 to 2.751-in. (67.26 to 69.88 mm)	0.083 to 0.563-in. (2.1 to 14.3 mm)	0.083 to 0.460-in. (2.1 to 11.7 mm)	A
				2.752 to 2.899-in. (69.90 to 73.63 mm)		0.083 to 0.416-in. (2.1 to 10.6 mm)	B
				2.900 to 3.068-in. (73.66 to 77.93 mm)		0.083 to 0.395-in. (2.1 to 10.0 mm)	C
				3.069 to 3.228-in. (77.95 to 81.99 mm)		0.083 to 0.404-in (2.1 to 10.3 mm)	D
	3 1/2-in. (89 mm)	4.25-in. (107.95 mm)	035	3.229 to 3.333-in. (82.02 to 84.66 mm)	0.120 to 0.600-in. (3.0 to 15.2 mm)	0.120 to 0.496-in. (3.0 to 12.6 mm)	B
				3.334 to 3.548-in. (84.68 to 90.12 mm)		0.120 to 0.386-in. (3.0 to 9.8 mm)	C
				3.549 to 3.734-in. (90.14 to 94.84 mm)		0.120 to 0.415-in. (3.0 to 10.5 mm)	D
	4-in. (100 mm)	5.032-in. (127.81 mm)	040	3.735 to 3.825-in. (94.87 to 97.16 mm)	0.120 to 0.600-in. (3.0 to 15.2 mm)	0.120 to 0.510-in. (3.0 to 13.0 mm)	B
				3.826 to 4.026-in. (97.18 to 102.26 mm)		0.120 to 0.400-in. (3.0 to 10.2 mm)	C
				4.027 to 4.237-in. (102.29 to 107.62 mm)		0.120 to 0.390-in. (3.0 to 9.9 mm)	D
				4.238 to 4.437-in. (107.65 to 112.70 mm)		0.120 to 0.401-in. (3.0 to 10.2 mm)	E
	5-in. (125 mm)	6.094-in. (154.79 mm)	050	4.438 to 4.571-in. (112.73 to 116.10 mm)	0.134 to 0.614-in. (3.4 to 15.6 mm)	0.134 to 0.481-in. (3.4 to 12.2 mm)	A
				4.572 to 4.812-in. (116.13 to 122.22 mm)		0.134 to 0.374-in. (3.4 to 9.5 mm)	B
				4.813 to 5.047-in. (122.25 to 128.19 mm)		0.134 to 0.380-in. (3.4 to 9.7 mm)	C
				5.048 to 5.249-in. (128.22 to 133.32 mm)		0.134 to 0.413-in. (3.4 to 10.5 mm)	D

Sensor Size 1	6-in. (150 mm)	6.93-in. (176.02 mm)	060	5.250 to 5.472-in. (133.35 to 138.99 mm)	0.134 to 0.614-in. (3.4 to 15.6 mm)	0.134 to 0.3919-in. (3.4 to 9.9 mm)	A
				5.473 to 5.760-in. (139.01 to 146.30 mm)		0.134 to 0.327-in. (3.4 to 8.3 mm)	B
				5.761 to 6.065-in. (146.33 to 154.05 mm)		0.134 to 0.31-in. (3.4 to 7.9 mm)	C
				6.066 to 6.383-in. (154.08 to 162.13 mm)		0.134 to 0.297-in. (3.4 to 7.5 mm)	D
Sensor Size 2	6-in. (150 mm)	6.93-in. (176.02 mm)	060	5.250 to 5.472-in. (133.35 to 139.99 mm)	0.134 to 1.354-in. (3.4 to 34.4 mm)	0.134 to 1.132-in. (3.4 to 28.7 mm)	A
				5.473 to 5.760-in. (139.01 to 146.30 mm)		0.134 to 1.067-in. (3.4 to 27.1 mm)	B
				5.761 to 6.065-in. (146.33 to 154.05 mm)		0.134 to 1.05-in. (3.4 to 26.7 mm)	C
				6.066 to 6.383-in. (154.08 to 162.13 mm)		0.134 to 1.037-in. (3.4 to 26.3 mm)	D
Sensor Size 1	7-in. (180 mm)	7.93-in. (201.42 mm)	070	6.384 to 6.624-in. (162.15 to 168.25 mm)	0.134 to 0.614-in. (3.4 to 15.6 mm)	0.134 to 0.374-in. (3.4 to 9.5 mm)	B
				6.625 to 7.023-in. (168.28 to 178.38 mm)		0.134 to 0.216-in. (3.4 to 5.5 mm)	C
				7.024 to 7.392-in. (178.41 to 187.76 mm)		0.134 to 0.246-in. (3.4 to 6.2 mm)	D
Sensor Z2	7-in. (180 mm)	7.93-in. (201.42 mm)	070	6.384 to 6.624-in. (162.15 to 168.25 mm)	0.134 to 1.354-in. (3.4 to 34.4 mm)	0.134 to 1.114-in. (3.4 to 28.3 mm)	B
				6.625 to 7.023-in. (168.28 to 178.38 mm)		0.134 to 0.956-in. (3.4 to 24.3 mm)	C
				7.024 to 7.392-in. (178.41 to 187.76 mm)		0.134 to 0.986-in. (3.4 to 25.0 mm)	D
Sensor Size 1	8-in. (200 mm)	9.688-in. (246.08 mm)	080	7.393 to 7.624-in. (187.78 to 193.65 mm)	0.250 to 0.73-in. (6.4 to 18.5 mm)	0.250 to 0.499-in. (6.4 to 12.6 mm)	B
				7.625 to 7.981-in. (193.68 to 202.72 mm)		0.250 to 0.374-in. (6.4 to 9.5 mm)	C
				7.982 to 8.400-in. (202.74 to 213.36 mm)		0.250 to 0.312-in. (6.4 to 7.9 mm)	D
				8.401 to 8.766-in. (213.39 to 222.66 mm)		0.250 to 0.364-in. (6.4 to 9.2 mm)	E
Sensor Size 2	8-in. (200 mm)	9.688-in. (246.08 mm)	080	7.393 to 7.624-in. (187.78 to 193.65 mm)	0.250 to 1.47-in. (6.4 to 37.3 mm)	0.250 to 1.239-in. (6.4 to 31.4 mm)	B
				7.625 to 7.981-in. (193.68 to 202.72 mm)		0.250 to 1.114-in. (6.4 to 28.3 mm)	C
				7.982 to 8.400-in. (202.74 to 213.36 mm)		0.250 to 1.052-in. (6.4 to 26.7 mm)	D
				8.401 to 8.766-in. (213.39 to 222.66 mm)		0.250 to 1.104-in. (6.4 to 28.0 mm)	E
	10-in. (250 mm)	11.75-in. (298.45 mm)	100	8.767 to 9.172-in. (222.68 to 232.97 mm)	0.250 to 1.470-in. (6.4 to 37.3 mm)	0.250 to 1.065-in. (6.4 to 27.1 mm)	A
				9.173 to 9.561-in. (232.99 to 242.85 mm)		0.250 to 1.082-in. (6.4 to 27.5 mm)	B
				9.562 to 10.020-in. (242.87 to 254.51 mm)		0.250 to 1.012-in. (6.4 to 25.7 mm)	C
				10.021 to 10.546-in. (254.53 to 267.87 mm)		0.250 to 0.945-in. (6.4 to 24.0 mm)	D
				10.547 to 10.999-in. (267.89 to 279.37 mm)		0.250 to 1.018-in. (6.4 to 25.9 mm)	E
	12-in. (300 mm)	13.0375-in. (331.15 mm)	120	11.000 to 11.373-in. (279.40 to 288.87 mm)	0.250 to 1.470-in. (6.4 to 37.3 mm)	0.250 to 1.097-in. (6.4 to 27.9 mm)	B
				11.374 to 11.938-in. (288.90 to 303.23 mm)		0.250 to 0.906-in. (6.4 to 23.0 mm)	C
				11.939 to 12.250-in. (303.25 to 311.15 mm)		0.250 to 1.159-in. (6.4 to 29.4 mm)	D

Rosemount 3051 Dimensional Drawings(1)

Figure 1. Rosemount 3051C Exploded View

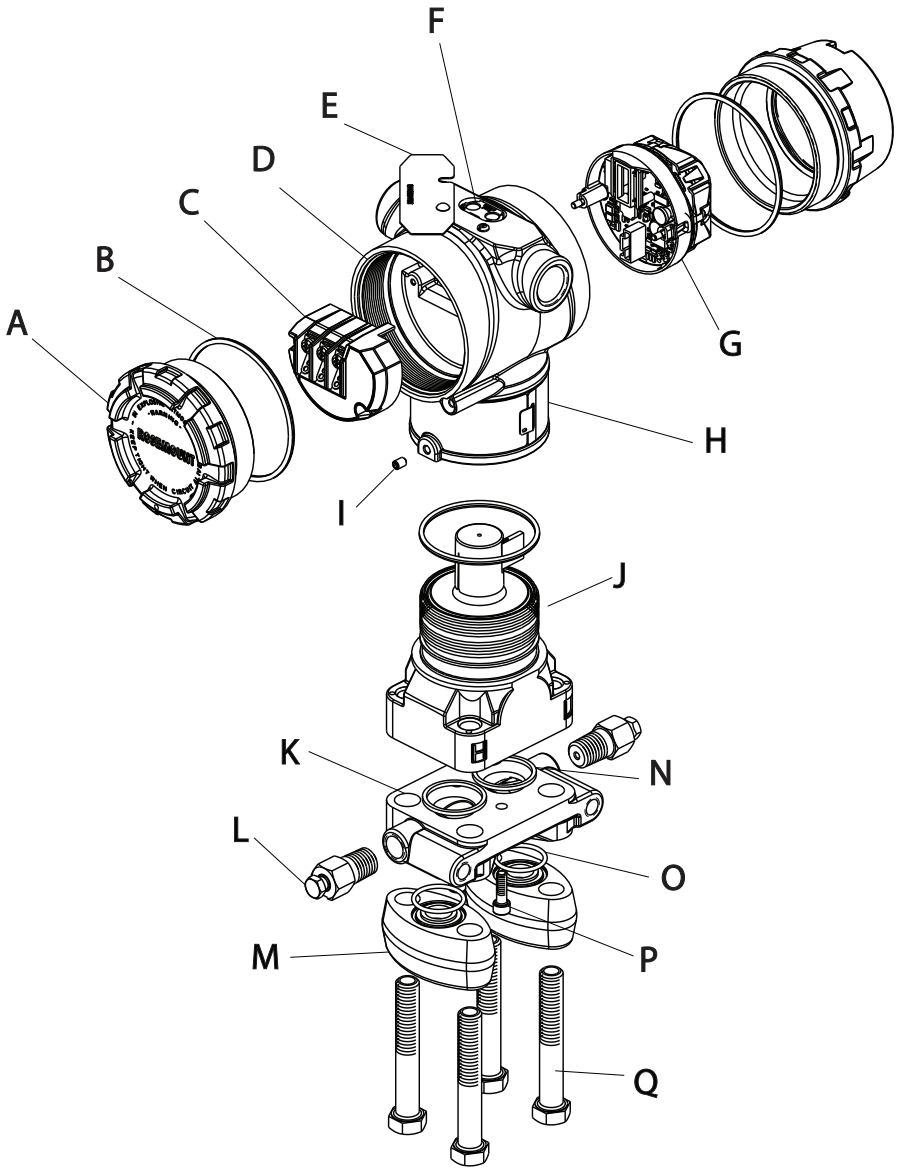

A. Cover
B. Cover O-ring
C. Terminal Block
D. Electronics Housing
E. Configuration Buttons Cover
F. Local Configuration Buttons
G. Electronics Board
H. Name Plate
I. Housing Rotation Set Screw (180 degree maximum rotation without further disassembly)
J. Sensor Module
K. Coplanar Flange
L. Drain/Vent Valve
M. Flange Adapters
N. Process O-Ring
O. Flange Adapter O-Ring
P. Flange Alignment Screw (not pressure retaining)
Q. Flange Bolts

(1) This section contains dimensional drawings for output codes A, F and X. For output codes W and M, visit http://www2.emersonprocess.com/en-US/brands/rosemount/Documentation-and-Drawings/Type-1-Drawings/Pages/index.aspx

Figure 16. Rosemount 3051L Dimensional Drawings

2-in. flange configuration (flush mount only)	3- and 4-in. flange configuration

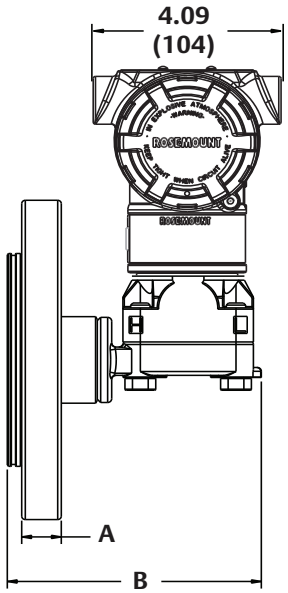

A. Flange Thickness
B. See Table 15.
C. Extension Diameter

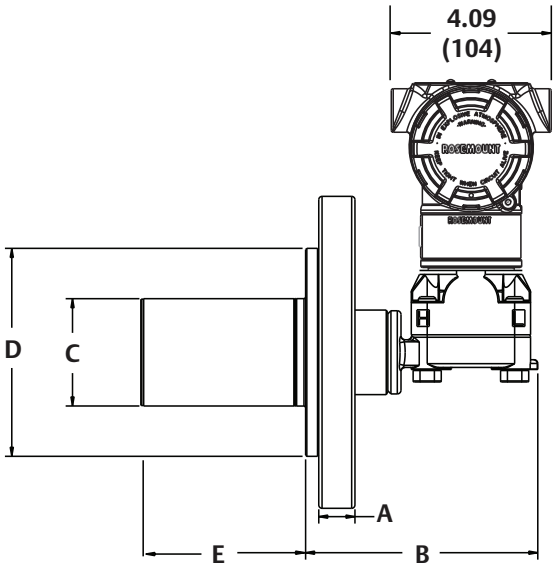

D. O.D. Gasket Surface
E. 2-in., 4-in., or 6-in. extension (only available with 3-in. and 4-in., DN80, and DN100 flange configurations)

Optional flushing connection ring (lower housing)	Diaphragm assembly and mounting flange

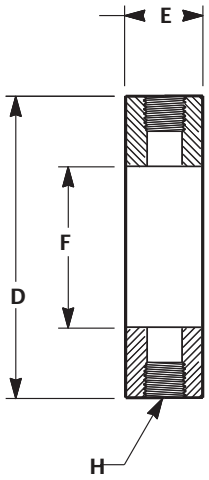

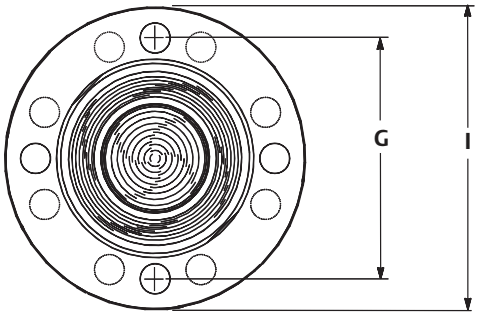

D. O.D. Gasket Surface
E. Lower Housing
F. Process Side
G. Bolt Circle Diameter
H. Flushing Connection
I. Outside Diameter

Diaphragm assembly and mounting flange

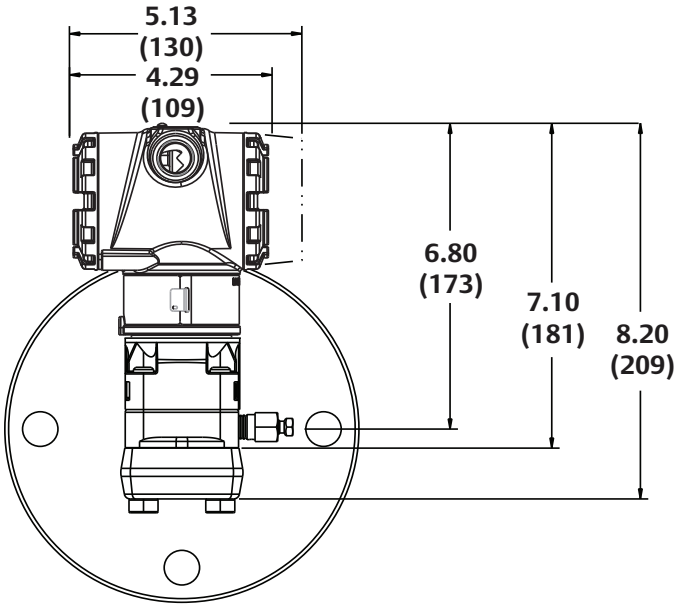

Dimensions are in inches (millimeters).

Table 15. 3051L Dimensional Specifications

Class[1]	Pipe size	Flange thickness A	Bolt circle diameter H	Outside diameter J	No. of bolts	Bolt hole diameter	Extension diameter[1] D	O.D. gasket surface E
ASME B16.5 (ANSI) 150	2 (51)	0.69 (18)	4.75 (121)	6.0 (152)	4	0.75 (19)	N/A	3.6 (92)
	3 (76)	0.88 (22)	6.0 (152)	7.5 (191)	4	0.75 (19)	2.58 (66)	5.0 (127)
	4 (102)	0.88 (22)	7.5 (191)	9.0 (229)	8	0.75 (19)	3.5 (89)	6.2 (158)
ASME B16.5 (ANSI) 300	2 (51)	0.82 (21)	5.0 (127)	6.5 (165)	8	0.75 (19)	N/A	3.6 (92)
	3 (76)	1.06 (27)	6.62 (168)	8.25 (210)	8	0.88 (22)	2.58 (66)	5.0 (127)
	4 (102)	1.19 (30)	7.88 (200)	10.0 (254)	8	0.88 (22)	3.5 (89)	6.2 (158)
ASME B16.5 (ANSI) 600	2 (51)	1.00 (25)	5.0 (127)	6.5 (165)	8	0.75 (19)	N/A	3.6 (92)
	3 (76)	1.25 (32)	6.62 (168)	8.25 (210)	8	0.88 (22)	2.58 (66)	5.0 (127)
DIN 2501 PN 10–40	DN 50	20 mm	125 mm	165 mm	4	18 mm	N/A	4.0 (102)
DIN 2501 PN 25/40	DN 80	24 mm	160 mm	200 mm	8	18 mm	66 mm	5.4 (138)
	DN 100	24 mm	190 mm	235 mm	8	22 mm	89 mm	6.2 (158)
DIN 2501 PN 10/16	DN 100	20 mm	180 mm	220 mm	8	18 mm	89 mm	6.2 (158)

Dimensions are in inches (millimeters).

(1) Tolerances are 0.040 (1.02), - 0.020 (0.51).

Class[1]	Pipe size	Process side G	Lower housing F		C
			1/4-in. NPT	1/2 -in. NPT	
ASME B16.5 (ANSI) 150	2 (51)	2.12 (54)	0.97 (25)	1.31 (33)	5.65 (143)
	3 (76)	3.60 (91)	0.97 (25)	1.31 (33)	5.65 (143)
	4 (102)	3.60 (91)	0.97 (25)	1.31 (33)	5.65 (143)
ASME B16.5 (ANSI) 300	2 (51)	2.12 (54)	0.97 (25)	1.31 (33)	5.65 (143)
	3 (76)	3.60 (91)	0.97 (25)	1.31 (33)	5.65 (143)
	4 (102)	3.60 (91)	0.97 (25)	1.31 (33)	5.65 (143)
ASME B16.5 (ANSI) 600	2 (51)	2.12 (54)	0.97 (25)	1.31 (33)	7.65 (194)
	3 (76)	3.60 (91)	0.97 (25)	1.31 (33)	7.65 (194)
DIN 2501 PN 10–40	DN 50	2.40 (61)	0.97 (25)	1.31 (33)	5.65 (143)
DIN 2501 PN 25/40	DN 80	3.60 (91)	0.97 (25)	1.31 (33)	5.65 (143)
	DN 100	3.60 (91)	0.97 (25)	1.31 (33)	5.65 (143)
DIN 2501 PN 10/16	DN 100	3.60 (91)	0.97 (25)	1.31 (33)	5.65 (143)

(1) Tolerances are 0.040 (1.02), - 0.020 (0.51).

Options

Standard configuration

Unless otherwise specified, transmitter is shipped as follows:

ENGINEERING UNITS Differential/Gage: Absolute/3051TA/3051TG:	inH_2O (Range 0, 1, 2, and 3) psi (Range 4 and 5) psi (all ranges)
4 mA[1]	0 (engineering units above)
20 mA[1]:	Upper range limit
Output:	Linear
External buttons:	None
Flange type:	Specified model code option
Flange material:	Specified model code option
O-ring material:	Specified model code option
Drain/vent:	Specified model code option
LCD Display:	None
Alarm[1]:	High
Software tag:	(Blank)
Damping:	0.4 seconds[2]

(1) Not applicable to FOUNDATION fieldbus, PROFIBUS PA, or wireless.

(2) For fieldbus protocols, default damping is 1 second.

Custom configuration[1]

If Option Code C1 is ordered, the customer may specify the following data in addition to the standard configuration parameters.

- Output Information
- Transmitter Information
- LCD Display Configuration
- Hardware Selectable Information
- Signal Selection
- Wireless Information
- Scaled Variable
- and more

Refer to the "Rosemount 3051 Configuration Data Sheet" document number 00806-0100-4007 for Rosemount 3051 HART protocol.

For Wireless refer to the "Rosemount 3051 Wireless Configuration Data Sheet" (document number 00806-0100-4100).[1]

Tagging (3 options available)

- Standard SST hardware tag is wired to the transmitter. Tag character height is 0.125 in. (3,18 mm), 56 characters maximum.
- Tag may be permanently stamped on transmitter nameplate upon request, 56 characters maximum.
- Tag may be stored in transmitter memory. Character limit is dependent on protocol.
  - HART Revision 5: 8 characters
  - HART Revision 7 and Wireless: 32 characters
  - FOUNDATION fieldbus: 32 characters
  - PROFIBUS PA: 32 characters

(1) Not applicable to FOUNDATION fieldbus or PROFIBUS PA protocols.

Commissioning tag[1]

A temporary commissioning tag is attached to all transmitters. The tag indicates the device ID and allows an area for writing the location.

Optional Rosemount 304, 305 or 306 Integral Manifolds

Factory assembled to 3051C and 3051T transmitters. Refer to the following Product Data Sheet (document number 00813-0100-4839 for Rosemount 304 and 00813-0100-4733 for Rosemount 305 and 306) for additional information.

Other seals

Refer to Product Data Sheet 00813-0100-4016 for additional information.

Output information

Output range points must be the same unit of measure. Available units of measure include:

Pressure			
atm	inH_2O@4 °C[2]	g/cm^2	psi
mbar	mmH_2O	kg/cm^2	torr
bar	mmHg	Pa	cmH_2O @4 °C[1][2]
inH_20	mmH_2O @4 °C[2]	kPa	mH_2O @4 °C[1][2]
inHg	ftH_20	MPa[2]	ftH_2O @60 °F[1][2]
hPa[1][2]	inH_2O@60 °F[2]	kg/m^2[1][2]	cmHg @0 °C[1][2]
mHg @0 °C[1][2]	psf[1][2]	ftH_2O @4 °C[1][2]	

(1) Field configurable only, not available for factory calibration or custom configuration (option code C1 “Software configuration”).

(2) Not available with Low Power (output option code M) or PROFIBUS PA (output option code W).

Display and interface options

M4 Digital Display with Local Operator Interface (LOI)

- Available for 4-20 mA HART and PROFIBUS PA

M5 Digital Display

- 2-Line, 5-Digit LCD display for low power output
- 2-Line, 8-Digit LCD display for 4-20 mA HART, FOUNDATION fieldbus and PROFIBUS PA
- 3-Line, 7-Digit LCD display for Wireless
- Direct reading of digital data for higher accuracy
- Displays user-defined flow, level, volume, or pressure units
- Displays diagnostic messages for local troubleshooting
- 90-degree rotation capability for easy viewing

Configuration buttons

Rosemount 3051 will ship with no buttons unless option D4 (Analog Zero and Span), DZ (Digital Zero), or M4 (LOI) for local configuration buttons are specified.

The Rosemount 3051 Wireless Transmitter is available with a Digital Zero button installed with or without the LCD display digital display.

Transient protection (option code T1)

Tested in accordance with IEEE C62.41.2-2002, Location Category B

6 kV crest (0.5 µs - 100 kHz)
3 kA crest (8 × 20 µs)
6 kV crest (1.2 × 50 µs)

Bolts for flanges and adapters

- Options permit bolts for flanges and adapters to be obtained in various materials
- Standard material is plated carbon steel per ASTM A449, Type 1

L4 Austenitic 316 Stainless Steel Bolts

L5 ASTM A 193, Grade B7M Bolts

L6 Alloy *K-500* Bolts

Conduit plug

DO 316 SST Conduit Plug
Single 316 SST conduit plug replaces carbon steel plug

Rosemount 3051C Coplanar Flange and 3051T Bracket Option

B4 Bracket for 2-in. Pipe or Panel Mounting

- For use with the standard coplanar flange configuration
- Bracket for mounting of transmitter on 2-in. pipe or panel
- Stainless steel construction with stainless steel bolts

(1) Only applicable to FOUNDATION fieldbus.

Rosemount 3051C Traditional Flange Bracket Options

B1 Bracket for 2-in. Pipe Mounting

- For use with the traditional flange option
- Bracket for mounting on 2-in. pipe
- Carbon steel construction with carbon steel bolts
- Coated with polyurethane paint

B2 Bracket for Panel Mounting

- For use with the traditional flange option
- Bracket for mounting transmitter on wall or panel
- Carbon steel construction with carbon steel bolts
- Coated with polyurethane paint

B3 Flat Bracket for 2-in. Pipe Mounting

- For use with the traditional flange option
- Bracket for vertical mounting of transmitter on 2-in. pipe
- Carbon steel construction with carbon steel bolts
- Coated with polyurethane paint

B7 B1 Bracket with SST Bolts

- Same bracket as the B1 option with Series 300 stainless steel bolts

B8 B2 Bracket with SST Bolts

- Same bracket as the B2 option with Series 300 stainless steel bolts

B9 B3 Bracket with SST Bolts

- Same bracket as the B3 option with Series 300 stainless steel bolts

BA Stainless Steel B1 Bracket with SST Bolts

- B1 bracket in stainless steel with Series 300 stainless steel bolts

BC Stainless Steel B3 Bracket with SST Bolts

- B3 bracket in stainless steel with Series 300 stainless steel bolts

Emerson Process Management
Rosemount Inc.
8200 Market Boulevard
Chanhassen, MN 55317 USA
T (U.S.) 1-800-999-9307
T (International) (952) 906-8888
F (952) 906 8889
www.rosemount.com

Emerson Process Management
Latin America
1300 Concord Terrace, Suite 400
Sunrise Florida 33323 USA
Tel + 1 954 846 5030
www.rosemount.com

Emerson Process Management Asia
Pacific Pte Ltd
1 Pandan Crescent
Singapore 128461
Tel +65 6777 8211
Fax +65 6777 0947
Service Support Hotline : +65 6770 8711
Email : Enquiries@AP.EmersonProcess.com
www.rosemount.com

Emerson Process Management
Blegistrasse 23
P.O. Box 1046
CH 6341 Baar
Switzerland
Tel +41 (0) 41 768 6111
Fax +41 (0) 41 768 6300
www.rosemount.com

Emerson FZE
P.O. Box 17033
Jebel Ali Free Zone
Dubai UAE
Tel +971 4 811 8100
Fax +971 4 886 5465
www.rosemount.com

Standard Terms and Conditions of Sale can be found at www.rosemount.com\terms_of_sale
The Emerson logo is a trade mark and service mark of Emerson Electric Co.
Tuned System, Coplanar, SmartPower, Annubar, Instrument Toolkit, Rosemount, and the Rosemount logotype are registered trademarks of Rosemount Inc.
PlantWeb is a registered trademark of one of the Emerson Process Management group of companies.
HART and *Wireless*HART are registered trademarks of the HART Communication Foundation.
FOUNDATION fieldbus is a trademark of the Fieldbus Foundation.
PROFIBUS is a registered trademark of PROFINET International (PI).
Fluorinert is a trademark of 3M.
Neobee is a registered trademark of Stepan Speciality Products, LLC.
SYLTHERM is a trademark of Dow Corning Corporation.
eurofast and minifast are registered trademarks of TURCK.
All other marks are the property of their respective owners.
© 2014 Rosemount Inc. All rights reserved.

ROSEMOUNT

EMERSON.
Process Management

Dwyer

FLOTECT® LIQUID LEVEL SWITCH

Easy In-wall or External Installation, Up to 2000 psig (138 bar)

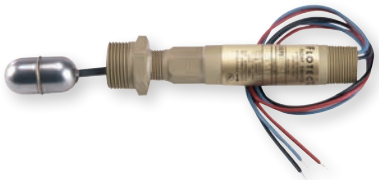

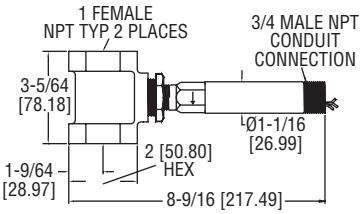

Model L6 with External Float Chamber

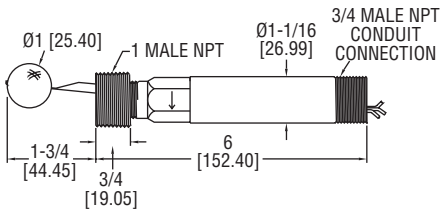

Model L6 with Spherical Float

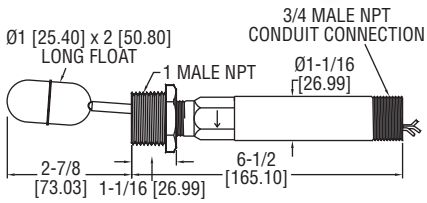

Model L6 with Cylindrical Float

Scan here to watch product video

The **SERIES L6** Flotect® Float Switches is a rugged and reliable float switch which operates automatically to indicate tank level. It is offered with a 303 SS or brass body with spherical or cylindrical float options.

FEATURES/BENEFITS

- Compact design is built for years of trouble-free service
- Simple and dependable operation with no mechanical linkage
- Float lever pivoted within the body moves when the process liquid displaces the float and magnet on the opposite end of the float lever controls a second magnet on the switch actuating lever located in the switch housing
- Leak proof lower body machined from bar stock
- Side wall or direct tee mounting options available to act as an external float chamber
- Weatherproof and explosion-proof body for demanding outdoor applications
- Electrical assembly can be easily replaced without removing the unit from the installation so that the process does not have to be shut down
- Sensitive to level changes of less than 1/2″ (12 mm)

APPLICATIONS

- Direct pump control for maintaining level
- Automatic tank dump operations
- Level control
- Valve control
- Level alarm in sumps, scrubber systems, hydro-pneumatic tanks, boilers, and water/wastewater treatment processes

OPTIONS

To order add suffix:	Description
-MV	Gold plated contacts for dry circuits (see electrical rating in specifications)
-MT	High temperature rated 400°F (204°C) (see electrical rating in specifications, no listings or approvals, only available on models with stainless steel floats)
-CSA	CSA and UL approved construction, includes weatherproof and explosion-proof junction box
-AT	ATEX compliant construction includes, weatherproof and explosion-proof, junction box
-IEC	IECEx certified construction
DPDT Contacts	

Note: To order, change seventh character in model number to “D”.
Example: L6EPB-B-D-3-O

Options Not Shown: 1-1/2″ and 2″ male NPT process connection, 2″ female NPT connection tee, and top mount.

SPECIFICATIONS

Service: Liquids compatible with wetted materials.
Wetted Materials: Float: Solid polypropylene or 304 SS; Lower Body: Brass or 303 SS; Magnet: Ceramic; External Float Chamber (Tee): Matches lower body choice of brass or 303 SS; Other: Lever Arm, Spring, Pin, etc.: 301 SS.
Temperature Limit: -4 to 220°F (-20 to 105°C) Standard, MT high temperature option 400°F (205°C)(MT not UL, CSA, ATEX, IECEx and KC). ATEX compliant AT, IECEx IEC and KC option ambient temperature -4 to 167°F (-20 to 75°C) process temperature: -4 to 220°F (-20 to 105°C).
Pressure Limits: See model chart.
Enclosure Rating: Weatherproof and Explosion-proof. Listed with UL and CSA for Class I, Groups A, B, C and D; Class II, Groups E, F, and G. (Group A on stainless steel body models only).
ATEX CE 0344 Ex II 2 G Ex d IIC T6 Gb Process Temp≤75°C.
EC-Type Certificate No.: KEMA 04ATEX2128.
ATEX Standards: EN 60079-0: 2009; EN60079-1: 2007.
IECEx Certified: For Ex d IIC T6 Gb Process Temp≤ 75°C.
IECEx Certificate of Conformity: IECEx DEK II.0039.
IECEx Standards: IEC 60079-00: 2007; IEC 60079-1: 2007.
Korean Certified (KC) for Ex d IIC T6 Gb Process Temp≤75°C.
KTL Certificate Number: 2012-2454-75.
Switch Type: SPDT snap switch standard, DPDT snap switch optional.
Electrical Rating: UL models: 5 A @ 125/250 VAC (V~). CSA, ATEX and IECEx models: 5 A @ 125/250 VAC (V~); 5 A res., 3 A ind. @ 30 VDC (V⎓). MV option: .1 A @ 125 VAC (V~). MT option: 5 A @125/250 VAC (V~). [MT option not UL, CSA, ATEX or IECEx].
Electrical Connections: UL models: 18 AWG, 18″ (460 mm) long. ATEX/CSA/IECEx models: terminal block.
Upper Body: Brass or 303 SS.
Conduit Connection: 3/4″ male NPT standard, 3/4″ female NPT on junction box models.
Process Connection: 1″ male NPT on models without external float chamber, 1″ female NPT on models with external float chamber.
Mounting Orientation: Horizontal with index arrow pointing down.
Specific Gravity: See chart.
Weight: Approximately 1 lb (.5 kg) without external float chamber, 1.75 lb (.8 kg) with external float chamber.
Agency Approvals: ATEX, CE, CSA, IECEx, KTL, UL.

MODEL CHART

Model	Body	Installation	Float Material	Max. Pressure psig (bar)	Min. S.G.
L6EPB-B-S-3-O	Brass	Side wall mounting	Polypropylene spherical	1000 (69)	0.9
L6EPB-B-S-3-A	Brass	Side wall mounting	304 SS cylindrical	200 (13.8)	0.5
L6EPB-B-S-3-C	Brass	Side wall mounting	304 SS spherical	350 (24.1)	0.7
L6EPB-B-S-3-B	Brass	Brass external float chamber (tee)	Polypropylene spherical	250 (17.2)	0.9
L6EPB-B-S-3-H	Brass	Brass external float chamber (tee)	304 SS spherical	250 (17.2)	0.7
L6EPS-S-S-3-O	303 SS	Side wall mounting	Polypropylene spherical	2000 (138)	0.9
L6EPS-S-S-3-A	303 SS	Side wall mounting	304 SS cylindrical	200 (13.8)	0.5
L6EPS-S-S-3-C	303 SS	Side wall mounting	304 SS spherical	350 (24.1)	0.7
L6EPS-S-S-3-S	303 SS	304 SS external float chamber (tee)	Polypropylene spherical	2000 (138)	0.9
L6EPS-S-S-3-L	303 SS	304 SS external float chamber (tee)	304 SS spherical	350 (24.1)	0.7

Model L6 FLOTECT® Float Switch

Specifications - Installation and Operating Instructions

Explosion-Proof; UL and CSA Listed -
Class I, Groups *A, B, C, & D
Class II, Groups E, F & G
Directive 94/9/EC (ATEX) Compliant for
II 2 G Ex d IIC T6 Gb Process Temp≤75°C
IECEx Compliant for Ex d IIC T6 Gb Process Temp≤75°C
*(Group A, stainless steel body only)

SPECIFICATIONS
Service: Liquids compatible with wetted materials.
Wetted Materials: Float: Solid polypropylene or 304 SS; Lower Body: Brass or 303 SS; Magnet: Ceramic; External Float Chamber (Tee): Matches lower body choice of brass or 303 SS; Other: Lever Arm, Spring, Pin, etc.: 301 SS.
Temperature Limit: -4 to 220°F (-20 to 105°C) Standard, MT high temperature option 400°F (205°C)(MT not UL, CSA, ATEX, IECEx and KC). ATEX compliant AT, IECEx IEC and KC option ambient temperature -4 to 167°F (-20 to 75°C) process temperature: -4 to 220°F (-20 to 105°C).
Pressure Limits: See next page.
Enclosure Rating: Weatherproof and Explosion-proof. Listed with UL and CSA for Class I, Groups A, B, C and D; Class II, Groups E, F, and G. (Group A on stainless steel body models only).
CE 0518 Ex II 2 G Ex d IIC T6 Gb Process Temp≤75°C.
EC-Type Certificate No.: KEMA 04ATEX2128.
ATEX Standards: EN 60079-0: 2009; EN60079-1: 2007.
IECEx Certified: For Ex d IIC T6 Gb Process Temp≤ 75°C.

IECEx Certificate of Conformity: IECEx DEK II.0039.
IECEx Standards: IEC 60079-00: 2007; IEC 60079-1: 2007.
Korean Certified (KC) for Ex d IIC T6 Gb Process Temp≤75°C.
KTL Certificate Number: 2012-2454-75.
Switch Type: SPDT snap switch standard, DPDT snap switch optional.
Electrical Rating: UL models: 5 A @ 125/250 VAC (V~). CSA, ATEX and IECEx models: 5 A @ 125/250 VAC (V~); 5A res., 3 A ind. @ 30 VDC (V⎓). MV option: 0.1 A @ 125 VAC (V~). MT option: 5 A @125/250 VAC (V~). [MT option not UL, CSA, ATEX or IECEx].
Electrical Connections: UL models: 18 AWG, 18″ (460 mm) long. ATEX/CSA/IECEx models: terminal block.
Upper Body: Brass or 303 SS.
Conduit Connection: 3/4″ male NPT standard, 3/4″ female NPT on junction box models.
Process Connection: 1″ male NPT on models without external float chamber, 1″ female NPT on models with external float chamber.
Mounting Orientation: Horizontal with index arrow pointing down.
Weight: Approximately 1 lb (.5 kg) without external float chamber, 1.75 lb (.8 kg) with external float chamber.
Specific Gravity: See next page.

Example	L6	EP	B	B	S	3	B	MT		L6EPB-B-S-3-B-MT level switch; brass upper housing, brass lower housing, brass tee with Polypropylene spherical float, SPDT snap switch, and high temperature option
Series	L6									Series L6 level switch
Construction		EP								Explosion proof and weatherproof
Upper Body Material			B S							Brass 303 Stainless Steel
Lower Body Material				B S						Brass 303 Stainless Steel
Circuit (Switch) Type					S D					SPDT DPDT
Line Size						3				1″ NPT
Tee and Float Options							0 A B C H L S			No Tee, Solid Polypropylene Spherical Float* No Tee, 304 SS Cylindrical Float Brass Tee, Solid Polypropylene Spherical Float* No Tee, 304 SS Spherical Float Brass Tee, 304 SS Spherical Float 303 SS Tee, 304 SS Spherical Float 303 SS Tee, Solid Polypropylene Spherical Float*
Switch Options								MV MT		Gold Contacts on snap switch for dry circuits (see specifications for ratings) High Temperature switch rated 400°F (205°C) (see specifications for ratings)*
Options									AT CSA IEC KC GL ID JCT JCTLH TBC TOP	ATEX approved construction (with JCT option standard) CSA approved construction (with JCT option standard)* IECEx approved construction (with JCT option standard) KC approved construction (with JCT option standard) Ground Lead* Customer Information on standard nameplate Weatherproof and explosion-proof junction box* Weatherproof and explosion-proof junction box, left side Terminal Block Connector* Top Mounted (No tee models only)*

* Options that do not have ATEX, IECEx or KC.

Attention: Units without the "AT" suffix are not Directive 94/9/EC (ATEX) compliant. These units are not intended for use in potentially hazardous atmospheres in the EU. These units may be CE marked for other Directives of the EU.

W.E. ANDERSON DIV., DWYER INSTRUMENTS, INC.
P.O. BOX 358 • MICHIGAN CITY, INDIANA 46360 U.S.A.
Phone: 219/879-8000
Fax: 219/872-9057
www.dwyer-inst.com
e-mail: info@dwyermail.com

MAXIMUM PRESSURE CHART

Model Number	Float	Pressure Rating psig (kg/cm²)
L6EPB-B-S-3-A	Cylindrical SS	200 (13.8)
L6EPB-B-S-3-B	Polypropylene	250 (17.2)
L6EPB-B-S-3-C	Round SS	350 (24.1)
L6EPB-B-S-3-H	Round SS	250 (17.2)
L6EPB-B-S-3-O	Polypropylene	1000 (69)
L6EPB-S-S-3-A	Cylindrical SS	200 (13.8)
L6EPB-S-S-3-C	Round SS	350 (24.1)
L6EPB-S-S-3-L	Round SS	350 (24.1)
L6EPB-S-S-3-O	Polypropylene	2000 (138)
L6EPB-S-S-3-S	Polypropylene	2000 (138)

INSTALLATION

Unpack switch and remove any packing material found inside lower housing or float chamber.

Switch must be installed with body in a horizontal plane and arrow on side pointing down.

If switch has an external float chamber (tee), connect it to vertical sections of 1″ NPT pipe installed outside vessel walls at appropriate levels. If unit has no external float chamber, it must be mounted in a 1″ NPT half coupling welded to the vessel wall. The coupling must extend through the wall.

Inspect and clean wetted parts at regular intervals.

ELECTRICAL CONNECTIONS

Connect wire leads in accordance with local electrical codes and switch action required. N.O. contacts will close and N.C. contacts will open when liquid level causes float to rise. They will return to “normal” condition on decreasing liquid level. Black = common, Blue = N.O. and Red = N.C.

For units supplied with both internal ground and external bonding terminals, the ground screw inside the housing must be used to ground the control. The external bonding screw is for supplementary bonding when allowed or required by local code. When external bonding conductor is required, conductor must be wrapped a minimum of 180° about the external bonding screw. See below. Some CSA listed models are furnished with a separate green ground wire. Such units must be equipped with a junction box, not supplied but available on special order.

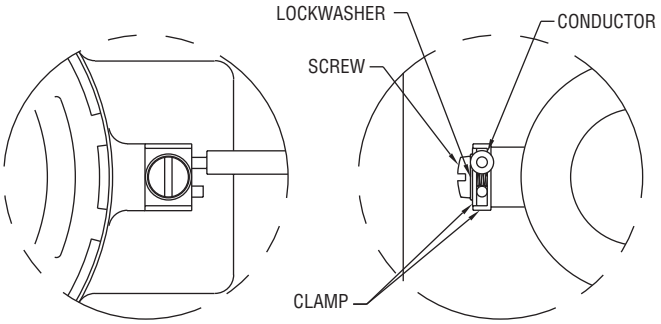

EC-Type Certificate IECEX and KC Installation Instructions:

Cable Connection

The cable entry device shall be certified in type of explosion protection flameproof enclosure “d”, suitable for conditions of use and correctly installed. For Ta ≥ 65°C cable and cable gland rated ≥ 90°C shall be used.

Conduit Connection

An Ex d certified sealing device such as a conduit seal with setting compound shall be provided immediately to the entrance of the valve housing. For Ta ≥ 65°C wiring and setting compound, in the conduit seal, rated ≥ 90°C shall be used.

WETTED MATERIALS CHART

Model	Brass	Bronze	Ceramic	Polypropylene	301SS	303SS	304SS
B-S-3-A	X		X		X		X
B-S-3-B	X	X	X	X	X		
B-S-3-C	X		X		X		X
B-S-3-H	X	X	X		X		
B-S-3-O	X		X	X	X		
S-S-3-A			X	X	X		X
S-S-3-C			X		X	X	X
S-S-3-L			X		X	X	X
S-S-3-O			X	X	X	X	
S-S-3-S			X	X	X	X	

Note: ATEX, IECEx and KC units only: The temperature class is determined by the maximum ambient and or process temperature. Units are intended to be used in ambient of -20°C≤ Tamb ≤75°C. Units may be used in process temperatures up to 105°C providing the enclosure and switch body temperatures do not exceed 75°C. The standard Temperature Class is T6 Process Temp ≤75°C.

Refer to Certificate No: IECEx DEK 11.0039 for conditions of safe use for IECEx compliant units.

All wiring, conduit and enclosures must meet applicable codes for hazardous areas. Conduits and enclosures must be properly sealed. For outdoor or other locations where temperatures vary widely, precautions should be taken to prevent condensation inside switch or enclosure. Electrical components must be kept dry at all times.

CAUTION: To prevent ignition of hazardous atmospheres, disconnect the device from the supply circuit before opening. Keep assembly tightly closed when in use.

MAINTENANCE

Inspect and clean wetted parts at regular intervals. The cover should be in place at all times to protect, the internal components from dirt, dust and weather and to maintain hazardous location ratings. Disconnect device from the supply circuit before opening to prevent ignition of hazardous atmosphere. Repairs to be conducted by Dwyer Instruments, Inc. Units in need of repair should be returned to the factory prepaid.

FLOTECT® MODEL L-6 FLOAT SWITCH — DIMENSION DRAWINGS

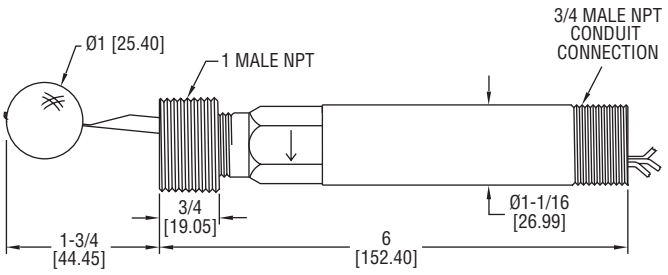

Polypropylene Float

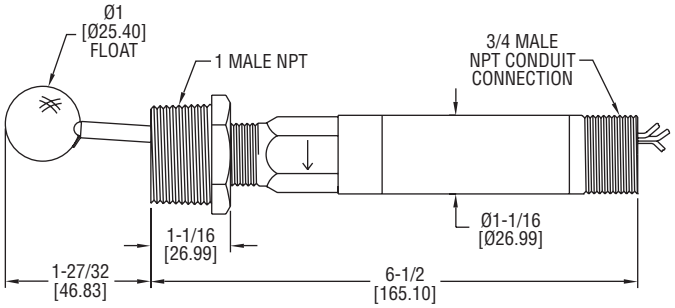

Round Stainless Steel Float

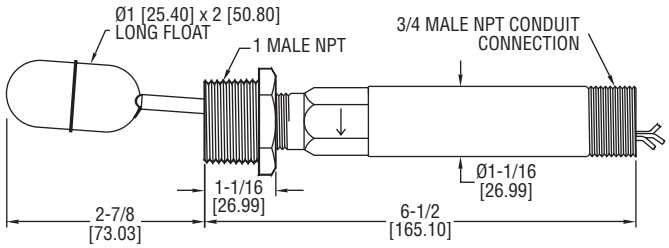

Cylindrical Stainless Steel Float

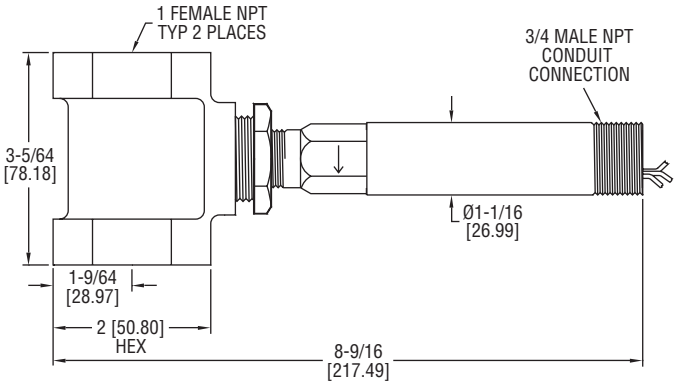

With External Chamber (Tee)

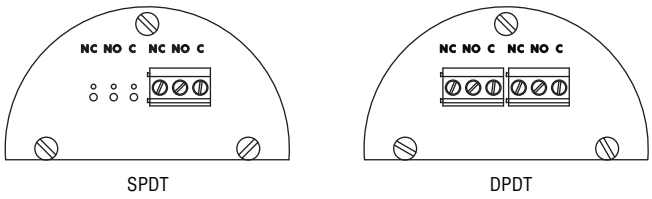

SPDT DPDT

Terminal Connections CSA, ATEX Enclosures

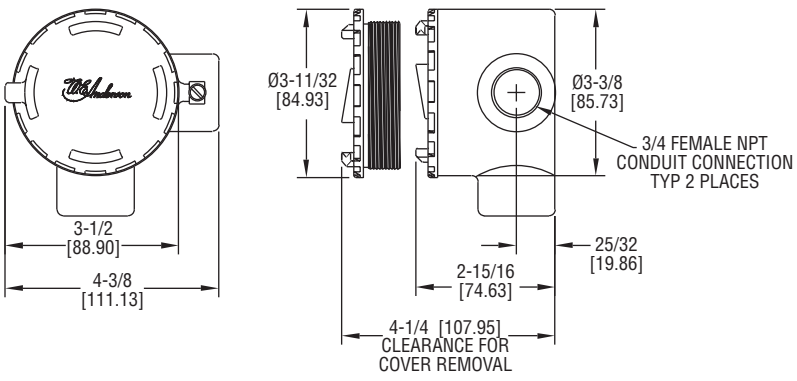

CSA, ATEX Conduit Enclosure

Limited Warranty: The Seller warrants all Dwyer instruments and equipment to be free from defects in workmanship or material under normal use and service for a period of one year from date of shipment. Liability under this warranty is limited to repair or replacement F.O.B. factory of any parts which prove to be defective within that time or repayment of the purchase price at the Seller's option provided the instruments have been returned, transportation prepaid, within one year from the date of purchase. All technical advice, recommendations and services are based on technical data and information which the Seller believes to be reliable and are intended for use by persons having skill and knowledge of the business, at their own discretion. In no case is Seller liable beyond replacement of equipment F.O.B. factory or the full purchase price. This warranty does not apply if the maximum ratings label is removed or if the instrument or equipment is abused, altered, used at ratings above the maximum specified, or otherwise misused in any way.

THIS EXPRESS LIMITED WARRANTY IS IN LIEU OF AND EXCLUDES ALL OTHER REPRESENTATIONS MADE BY ADVERTISEMENTS OR BY AGENTS AND ALL OTHER WARRANTIES, BOTH EXPRESS AND IMPLIED. THERE ARE NO IMPLIED WARRANTIES OF MERCHANTABILITY OR OF FITNESS FOR A PARTICULAR PURPOSE FOR GOODS COVERED HEREUNDER.

Buyers Remedies: THE BUYER'S EXCLUSIVE AND SOLE REMEDY ON ACCOUNT OF OR IN RESPECT TO THE FURNISHING OF NON-CONFORMING OR DEFECTIVE MATERIAL SHALL BE TO SECURE REPLACEMENT THEREOF AS AFORESAID. THE SELLER SHALL NOT IN ANY EVENT BE LIABLE FOR THE COST OF ANY LABOR EXPENDED ON ANY SUCH MATERIAL OR FORM ANY SPECIAL, DIRECT, INDIRECT OR CONSEQUENTIAL DAMAGES TO ANYONE BY REASON OF THE FACT THAT IT SHALL HAVE BEEN NON-CONFORMING OR DEFECTIVE.

©Copyright 2015 Dwyer Instruments, Inc.
Printed in U.S.A. 9/15

FR# 440726-00 Rev. 14

W.E. ANDERSON DIV., DWYER INSTRUMENTS, INC.
P.O. BOX 358 • MICHIGAN CITY, INDIANA 46360 U.S.A.

Phone: 219/879-8000
Fax: 219/872-9057

www.dwyer-inst.com
e-mail: info@dwyermail.com

Fliteway Technologies, Inc.

Instrumentation for Treated Water Storage Tank

2129 E. Birchwood Avenue, Cudahy, WI 53110

(414) 483-5600 (800) 236-3580 Fax: (414) 483-1957

See Instrumentation for Groundwater Treatment Feed Tank Section

Fliteway Technologies, Inc.

Feed Pump Skid

2129 East Birchwood Ave. Cudahy, WI 53110

(414) 483-5600 1-800-236-3580 FAX (414) 483-1957

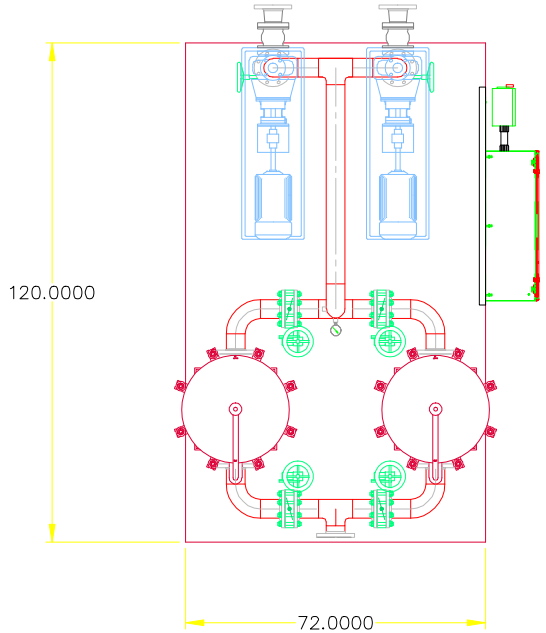

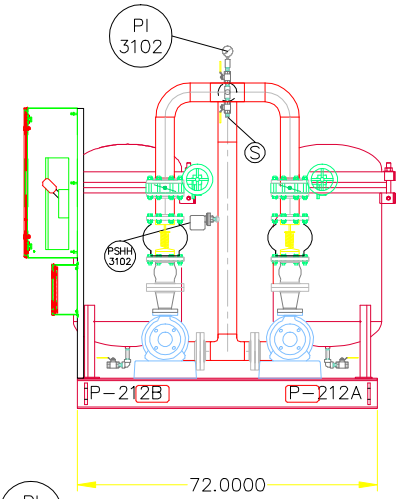

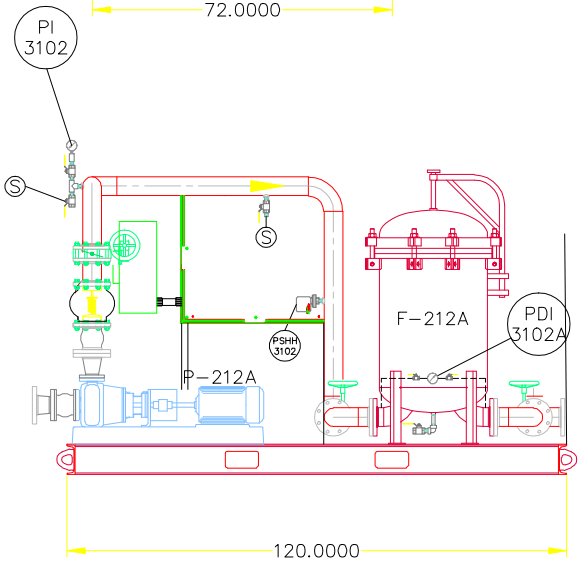

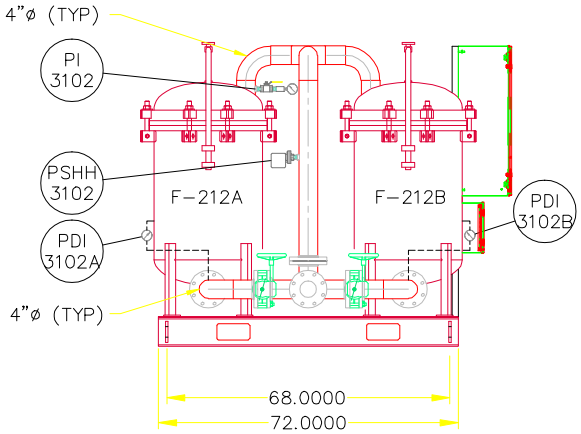

THIS DRAWING IS THE PROPERTY OF
Fliteway Technologies, Inc
2129 EAST BIRCHWOOD AVE
CUDAHY WI, 53110
414.483.5600 414.483.1957
AND IS NOT TO BE REPRODUCED
WITHOUT WRITTEN PERMISSION

6'X10' FEED PUMP SKID

TECHSAS INC.
KIRTLAND AFB

9/19/16	SIZE	FSCM NO.	DWG NO. Q14617	REV 1
	SCALE NONE		SHEET 1 OF 1

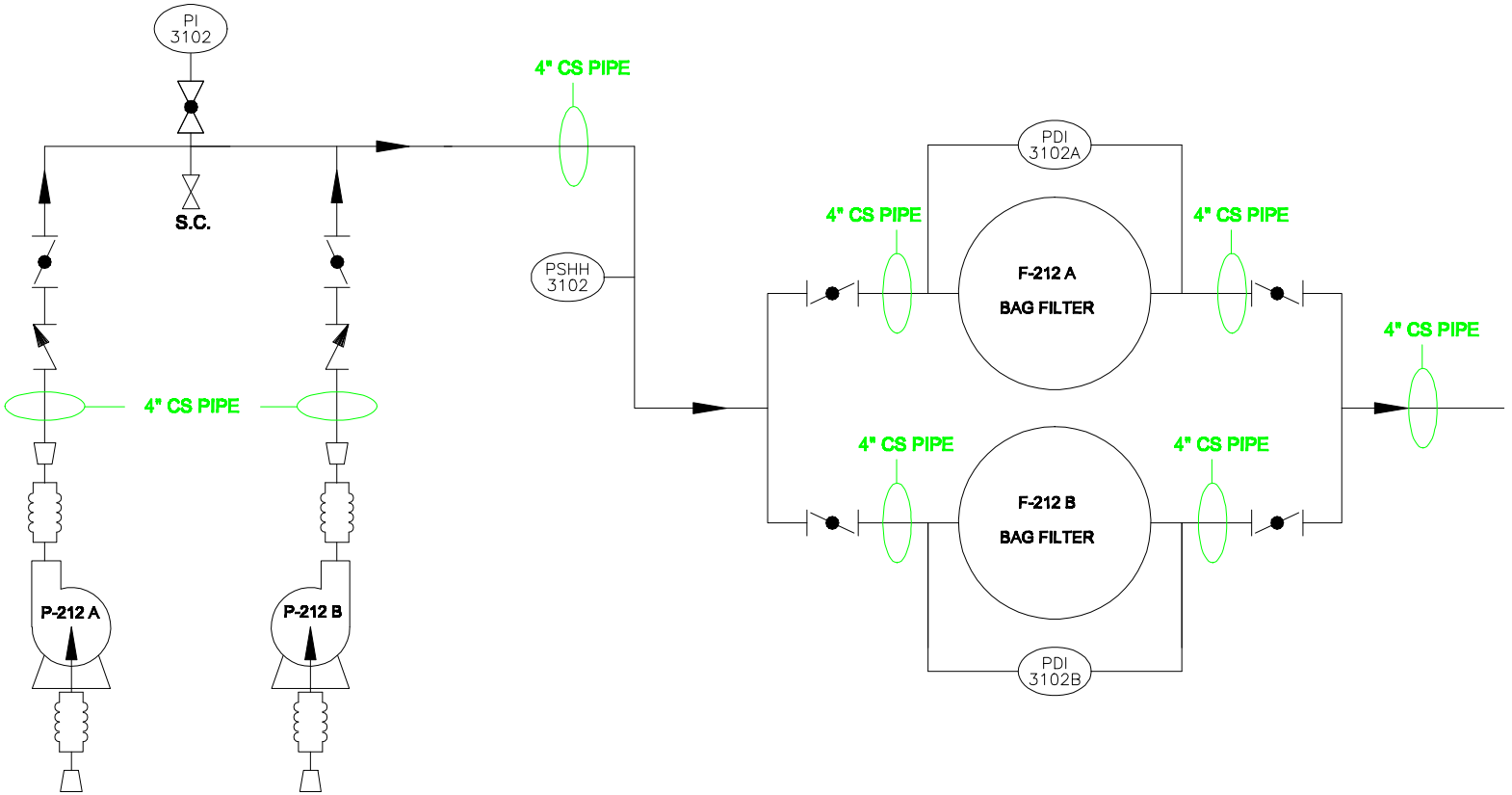

CONCENTRIC REDUCER

S.C. SAMPLE CONNECTION/PORT

CHECK VALVE

BALL VALVE

EXPANSION JOINT

BUTTERFLY VALVE

THIS DRAWING IS THE PROPERTY OF
Fliteway Technologies, Inc
2129 EAST BIRCHWOOD AVE
CUDAHY WI, 53110
414.483.5600 414.483.1957
AND IS NOT TO BE REPRODUCED WITHOUT WRITTEN PERMISSION

8/11/16

6'X10' FEED PUMP P&ID

TECHSAS INC.
KIRTLAND AFB

SIZE	FSCM NO.	DWG NO.	REV
		Q14617	1

SCALE NONE

SHEET 1 OF 1

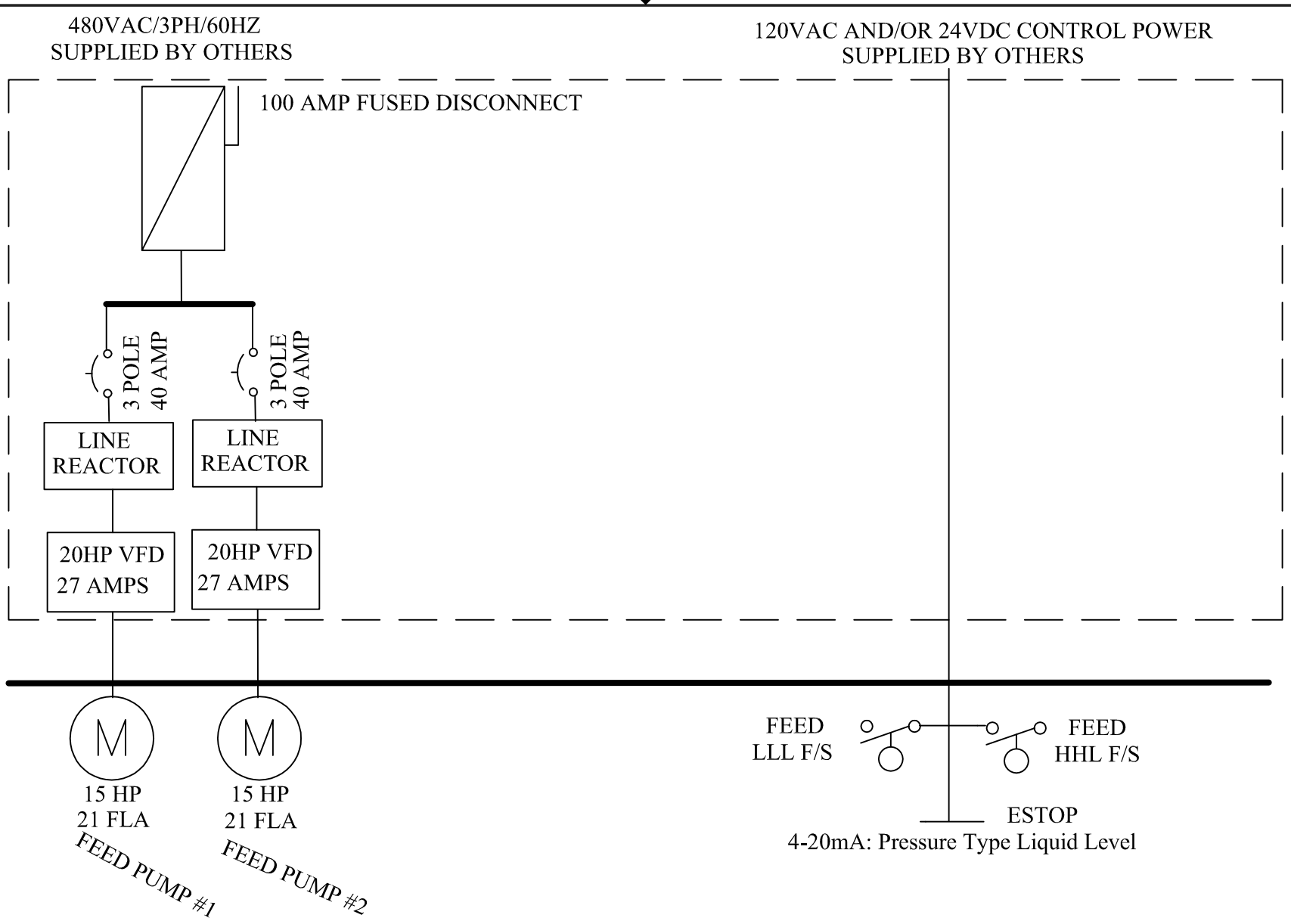

THIS DRAWING IS THE PROPERTY OF
Fliteway Technologies, Inc
2129 East Birchwood Avenue
Cudahy, WI 53110
414.483.5600 414.483.1957
AND IS NOT BE REPRODUCED
WITHOUT WRITTEN PERMISSION

ONE LINE ELECTRICAL DIAGRAM

FEED PUMP SKID

9/23/16

TECHSAS, Inc

SIZE	FSCM NO.	DWG NO.	REV
		Q14617	2

SCALE NONE | SHEET

FEED PUMP SKID #1

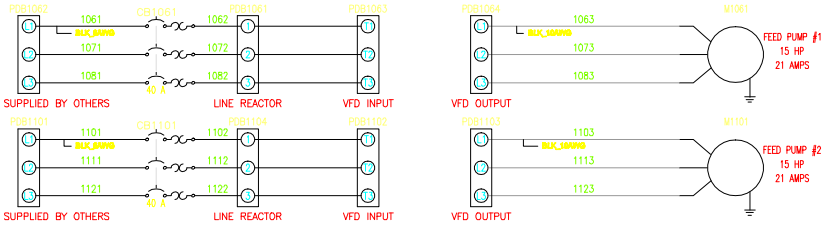

HIGH VOLTAGE PANEL

VFD FEED PUMP #1 WIRING

VFD_TB_12	VFD FAULT - PROVIDED OVER ETHERNET
VFD_TB_13	
VFD_TB_15	VFD RUNNING - PROVIDED OVER ETHERNET
VFD_TB_16	
VFD_TB_25	N
VFD_TB_28	120VAC VFD RUN SIGNAL (FROM MCP)

VFD FEED PUMP #2 WIRING

VFD_TB_12	VFD FAULT - PROVIDED OVER ETHERNET
VFD_TB_13	
VFD_TB_15	VFD RUNNING - PROVIDED OVER ETHERNET
VFD_TB_16	
VFD_TB_25	N
VFD_TB_28	120VAC VFD RUN SIGNAL (FROM MCP)

LOW VOLTAGE JUNCTION BOX

LOW VOLTAGE JBOX

HHL_F/S	120VAC OR 24VDC CONTROL POWER
HHL_F/S	TANK HHL ALARM (DRY CONTACT)
LL_F/S	
LL_F/S	TANK LLL (DRY CONTACT)
PRS._SW	
PRS._SW	HIGH PRESSURE SWITCH ALARM (N.O. DRY CONTACT)
FLOW_METER	24VDC CONTROL POWER
FLOW_METER	FLOW METER 4-20mA SIGNAL
FLOW_METER	FLOW METER SHIELD WIRE
P1_THRM_OL	120VAC CONTROL POWER
P1_THRM_OL	FEED PUMP #1 MOTOR THERMAL OVERLOAD WIRED TO VFD, VIEWED OVER ETHERNET
P2_THRM_OL	
P2_THRM_OL	FEED PUMP #2 MOTOR THERMAL OVERLOAD WIRED TO VFD, VIEWED OVER ETHERNET
LVL_TRANS	24VDC CONTROL POWER
LVL_TRANS	LEVEL TRANSMITTER 4-20mA SIGNAL
LVL_TRANS	LEVEL TRANSMITTER SHIELD WIRE

TREAT WATER PUMP SKID #2

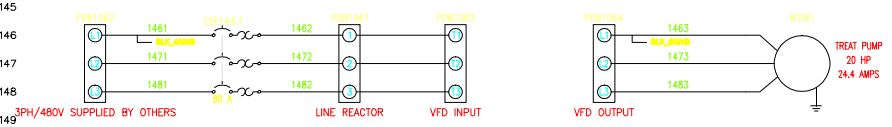

HIGH VOLTAGE PANEL

VFD TREAT PUMP WIRING

VFD_TB_12	VFD FAULT - PROVIDED OVER ETHERNET
VFD_TB_13	
VFD_TB_15	VFD RUNNING - PROVIDED OVER ETHERNET
VFD_TB_16	
VFD_TB_25	N
VFD_TB_28	120VAC VFD RUN SIGNAL (FROM MCP)

LOW VOLTAGE JUNCTION BOX

LOW VOLTAGE JBOX

HHL_F/S	120VAC OR 24VDC CONTROL POWER
HHL_F/S	TANK HHL ALARM (DRY CONTACT)
LL_F/S	
LL_F/S	TANK LLL (DRY CONTACT)
PRS._SW	
PRS._SW	HIGH PRESSURE SWITCH ALARM (N.O. DRY CONTACT)
FM_24V	24VDC CONTROL POWER
FM_TR	FLOW METER 4-20mA SIGNAL
FM_S	FLOW METER SHIELD WIRE
TP_THRM_OL	120VAC CONTROL POWER
TP_THRM_OL	TREATMENT PUMP MOTOR THERMAL OVERLOAD WIRED TO VFD, VIEWED OVER ETHERNET
LVL_TRANS	24VDC CONTROL POWER
LVL_TRANS	LEVEL TRANSMITTER 4-20mA SIGNAL
LVL_TRANS	LEVEL TRANSMITTER SHIELD WIRE

THIS PRINT AND ITS CONTENTS ARE THE PROPERTY OF FLITEWAY AND MUST NOT BE USED FOR ANY PURPOSE NOT AUTHORIZED BY FLITEWAY. DO NOT DISCLOSE, REPRODUCE OR OTHERWISE USE THIS PRINT OR ITS CONTENTS IN ANY MANNER DETRIMENTAL TO THE INTEREST OF FLITEWAY WITHOUT FLITEWAY'S PRIOR WRITTEN CONSENT. FLITEWAY RESERVES ALL RIGHTS OF DESIGN AND INVENTION TO THE EXTENT PERMITTED BY LAW.

CAD SYSTEM	ACADE
SCALE	1:1
UNITS	IN
FORMAT	D

Fliteway Technologies, Inc.
2129 East Birchwood Ave.
Cudahy, WI 53110

DRAWN BY	Josh
Q #	Q14617 R2
DESIGNED FOR	TECHSAS, Inc.
DESCRIPTION	
Drawing Number	

PLOTTED : 12-16-2014

CRANE ENGINEERING SALES

December 11, 2014

Proposal No: TS14-12-11 01
Item No: Feed Pumps

MODEL:3196 STi SIZE:2x3-6 QTY: 1

Operating Conditions

i-FRAME™

SERVICE

LIQUID	Groundwater Temp. 70.0 deg F, SP.GR 1.000, Viscosity 1.000 cp, rated / max. suction pressure 0.0 / 0.0 psi g
CAPACITY Rated	200.0 gpm
HEAD	100.0 (ft)

Performance at 3500 RPM per HI 14.6 1B basis power

PUBLISHED EFFY	66.5% (CDS)
RATED EFFY	63.5% with contract seal
RATED POWER	8.4 hp (incl. Mech. seal drag 0.37). (Run out 10.7 hp)
NPSHR	10.0 ft
DISCH PRESSURE (R)	45.9 psi g (50.0 psi g @ Shut off) based on 0.0 psi g rated suction pressure
PERF. CURVE	2228-6 (Rotation CW viewed from coupling end)
SHUT OFF HEAD	115.6 ft
MIN. FLOW	Continuous Stable: 35.5 gpm Hydraulic: 35.5 gpm Thermal: N/A

Materials

CONSTRUCTION	Ductile iron
CASING	Ductile iron (max.casing pressure @ rated temperature 250.0 psi g)
ST.BOX COVER	Ductile iron
IMPELLER	Ductile iron - Open (5.3750 in rated, max=6.0620 in, min=4.0000 in)
CASING GASKETS	Aramid Fiber with EPDM and Silicate Filler
IMPELLER O-RING	Teflon
SHAFT MATERIAL	SAE 4140
SHAFT SLEEVE	316SS
LUBRICATION	Flood oil
SEAL CHAMBER	Taper bore plus with axial ribs
GLAND	316SS Flush quench and drain
BEARINGS	6207 (Inboard) 5306 (Outboard)
COUPLING	Rexnord - Omega Rex Elastomer- ES-4 (standard orange element)-S.F. 1.00
COUPLING GUARD	Carbon steel
BASEPLATE	Cast iron camber top E00025A

Sealing Method

MECHANICAL SEAL	John Crane 5611Q X(1)F(50)1XO(58)1 (Carbon vs Silicon Carbide with Viton) - (Cartridge - Single)

Flanges

150# flat face

Frame Connections

Bearing frame drain
Frame cooler access
Oil fill connection

Frame features

Ductile iron frame adapter
Inpro VBXX-D Hybrid Bearing Isolators
Premium Severe Duty Thrust Bearings
i- ALERT™ Condition Monitor

Assembly and Testing

Casing & Cover - Standard hydro test
Impeller balanced to ISO G6.3

Painting

Goulds Blue standard painting

Warranty

5 Year Extended Warranty (All the components, manufactured by ITT Goulds pumps, in the liquid end and power end are covered).

Driver : Electric motor Manufacturer : Pump mfg's Choice

FURNISHED BY	Pump mfg	MOUNTED BY	Pump mfg
RATING	15.0 hp (11.2 KW)	ENCLOSURE	TEFC - Premium Efficiency
PHASE/FREQ/VOLTS	3/60 Hz/460	SPEED	3600 RPM
INSULATION/SF	F/1.15	FRAME	254T

Freight Terms

Freight invoices received from ITT partner carriers are proprietary information and cannot be divulged for any reason. ITT will provide an ITT generated freight invoice upon request.

Weights and Measurements

TOTAL NET UNIT WEIGHT / VOLUME	**490.5 lb / 7.2 ft³**
TOTAL GROSS UNIT WEIGHT / GROSS VOLUME	**604.5 lb / 22.8 ft³**

Program Version 1.50.0.1

Drawing Revision Limit

Drawings returned with status approved as noted or revise and re-submit will be corrected and resubmitted only once. Thereafter, additional comments or revisions to these drawings will incur a charge of $250 per drawing.

Our offer does not include specific review and incorporation of any Statutory or Regulatory Requirements and the offer is limited to the requirements of the design specifications. Should any Statutory or Regulatory requirements need to be reviewed and incorporated then the Customer is responsible to identify those and provide copies for review and revision of our offer.

Our quotation is offered in accordance with our comments and exceptions identified in our proposal.

Click here to download the pump Bulletin

Click here to learn more about the new i-FRAME™

GOULDS PUMPS

OUTLINE DRAWING

Model 3196 STi
Size 2x3-6

ITT

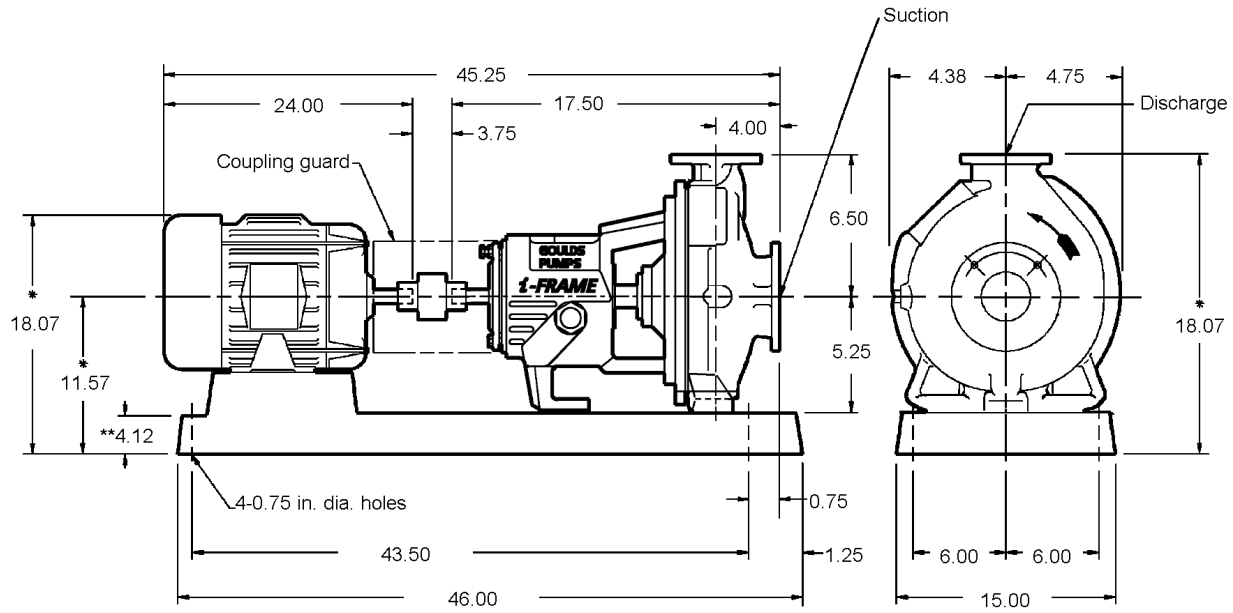

Pump Specification

SUCT.FLANGE SIZE	*3"*	DRILLING	*ANSI 150#*	FACING	*FF*	FINISH	*SERRATED*
DISCH.FLANGE SIZE	*2"*	DRILLING	*ANSI 150#*	FACING	*FF*	FINISH	*SERRATED*
PUMP ROTATION (LOOKING AT PUMP FROM MOTOR)			*CW*				
TYPE OF LUBRICATION	*FLOOD OIL*					COOLED	*NO*
TYPE OF STUFFING BOX	*TAPER BORE PLUS WITH AXIAL RIBS*					COOLED	*NO*
TYPE OF SEALING	*MECHANICAL SEAL*						

Weights and Measurements

PUMP	*95.0 lb*
MOTOR/CPLG	*270.0/5.5 lb*
BASEPLATE	*120.0 lb*
TOTAL	*490.5 lb*
GR.VOLUME w/BOX	*22.8 ft³*
GR.WEIGHT w/BOX	*604.5 lb*

Motor Specification

MOTOR BY	*PUMP MFG*	MOUNT BY	*PUMP MFG*	MFG.	*PUMP MFG'S CHOICE*
FRAME	*254T*	POWER	*15.0 hp*	RPM	*3600*
PHASE	*3*	FREQUENCY	*60 HZ*	VOLTS	*460*
INSULATION	*F*	S.F.	*1.15*		
ENCLOSURE	*TEFC - PREMIUM EFFICIENCY*				

Notes and References

- MTR DIMENSIONS ARE APPROXIMATE
- INSTALL FOUNDATION BOLTS IN PIPE SLEEVES
- ALLOW FROM 0.75 to 1.50in. FOR GROUTING. SEE INSTRUCTION BOOK FOR DETAILS.

*Tolerance is -0.50 +0

** Foundation bolt grip thickness

Auxiliary Specification

COUPLING BY	*PUMP MFG*	CPLG TYPE	*REXNORD OMEGA REX ELASTOMER- ES-4 (STANDARD ORANGE*
CPL GUARD BY	*PUMP MFG*	CPLG GUARD MATL	*CARBON STEEL*
BASEPLATE	*CAST IRON CAMBER TOP E00025A*		
MECH.SEAL	*JOHN CRANE 5611Q X(1)F(50)1XO(58)1 (CARBON VS SILICON CARBIDE WITH VITON)*		

FOR PUMP TAPPED OPENINGS REFER TO DWG.:
TTS14-12-11 01 / Feed Pumps

DRAWING IS FOR REFERENCE ONLY.
NOT CERTIFIED FOR CONSTRUCTION UNLESS SIGNED.

Customer: CRANE ENGINEERING SALES
Serial No:
Customer P.O. No:
Item No: Feed Pumps
End User: .
Service:

Copyright 2014
ITT Corp

All dimensions are in inches.
Drawing is not to scale
Weights (lbs) are approximate

DRAWING NO TS14-12-11 01/Feed Pumps

Model: 3196	Size: 2x3-6	Group: STi	60Hz	RPM: 3500	Stages: 1

Job/Inq.No. :
Purchaser : CRANE ENGINEERING SALES
End User: .
Item/Equip.No. : Feed Pumps
Service :
Order No. :

Issued by : Tom Schroeder
Quotation No. : TS14-12-11 01
Certified By :

Date : 12/11/2014
Rev. : 0

Operating Conditions

Liquid:	Groundwater	Published Efficiency:	66.5 %	Suction Specific Speed:	8,473 gpm(US) ft
Temp.:	70.0 deg F	Rated Pump Efficiency:	63.5 %	Min. Hydraulic Flow:	35.5 gpm
S.G./Visc.:	1.000/1.000 cp	Rated Total Power:	8.4 hp	Min. Thermal Flow:	N/A
Flow:	200.0 gpm	Non-Overloading Power:	10.7 hp		
TDH:	100.0 ft	Imp. Dia. First 1 Stg(s):	5.3750 in		
NPSHa:	0.0 ft	NPSHr:	10.0 ft		
Solid size:		Shut off Head:	115.6 ft		
% Susp. Solids (by wtg):		Vapor Press:		Max. Solids Size:	0.3750 in

Pump Performance

Notes: 1. Power and efficiency losses are not reflected on the curve below.
2. Elevated temperature effects on performance are not included.

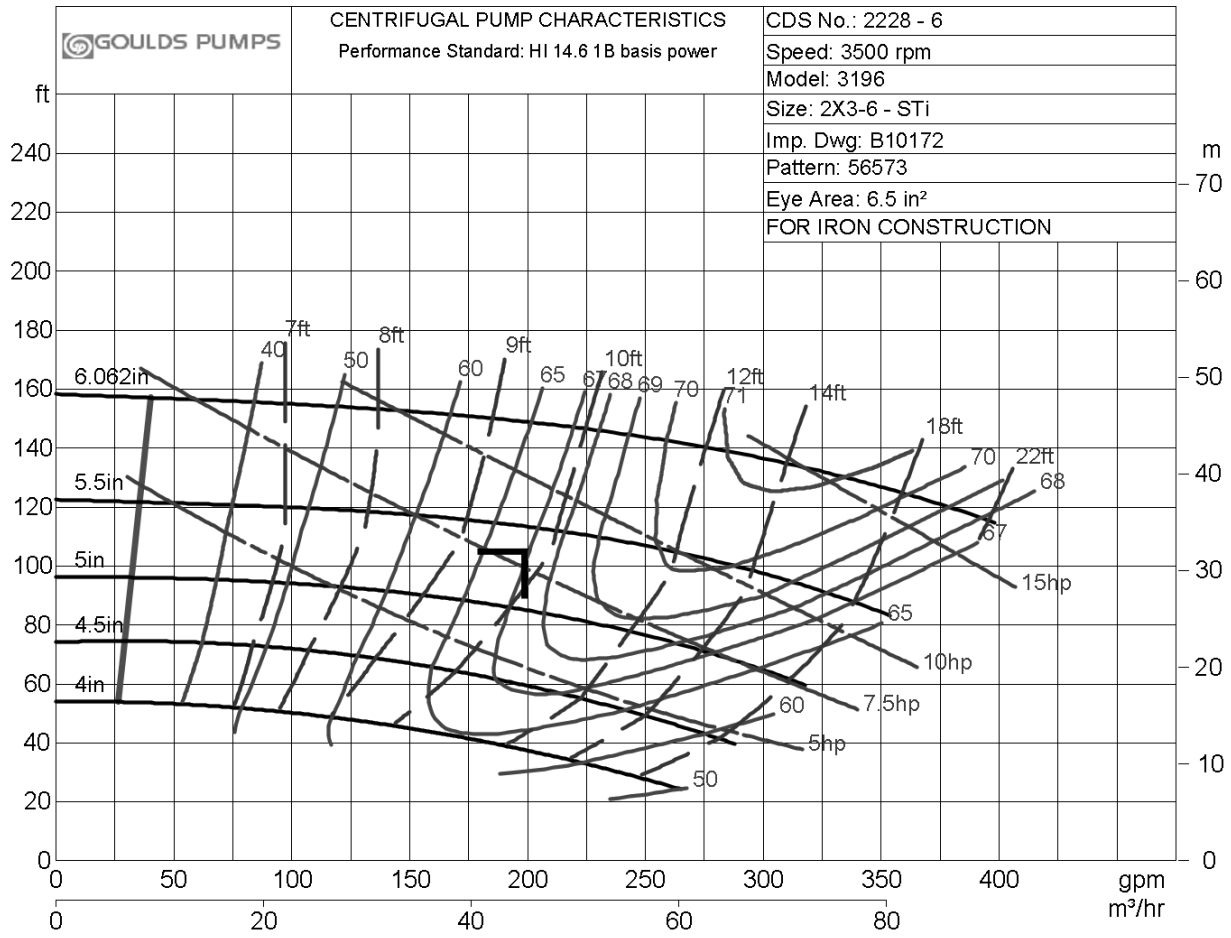

ITT

GOULDS PUMPS

Installation, Operation, and Maintenance Manual

Model 3196 i-FRAME

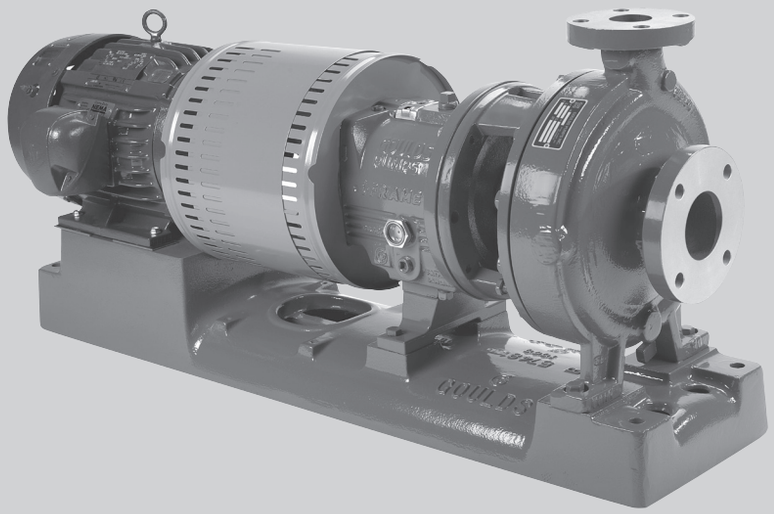

ITT

ENGINEERED FOR LIFE

Table of Contents

Introduction and Safety 4
Introduction 4
Safety 4
Safety terminology and symbols 5
Environmental safety 5
User safety 6
Ex-approved products 8
Product approval standards 8
Product warranty 9

Transportation and Storage 11
Inspect the delivery 11
Inspect the package 11
Inspect the unit 11
Transportation guidelines 11
Pump handling 11
Lifting methods 11
Storage guidelines 14
Pump storage requirements 14
Frostproofing 15

Product Description 16
General description 3196 16
Part description 3196 17
General description i-ALERT™ Condition Monitor 18
Nameplate information 19

Installation 22
Preinstallation 22
Pump location guidelines 22
Foundation requirements 22
Baseplate-mounting procedures 23
Prepare the baseplate for mounting 23
Install the baseplate using shims or wedges 23
Install the baseplate using jackscrews 24
Install the baseplate using spring mounting 27
Install the baseplate using stilt mounting 28
Baseplate-leveling worksheet 30
Install the pump, driver, and coupling 31
Pump-to-driver alignment 31
Alignment checks 31
Permitted indicator values for alignment checks 32
Alignment measurement guidelines 32
Attach the dial indicators for alignment 32
Pump-to-driver alignment instructions 33
C-face adapter 36
Grout the baseplate 36
Piping checklists 37
General piping checklist 37
Suction-piping checklist 39
Discharge piping checklist 41

Commissioning, Startup, Operation, and Shutdown 43
Preparation for startup 43
Remove the coupling guard 44
Check the rotation - Frame Mounted 46
Impeller-clearance check 46
Impeller clearances (3196 and HT 3196) 47
Impeller-clearance setting 47
Set the impeller clearance - dial indicator method (all except CV 3196) 47
Set the impeller clearance - feeler gauge method (all except CV 3196) 48
Couple the pump and driver 49
Install the coupling guard 50
Bearing lubrication 54
Shaft-sealing options 56
Mechanical seal options 56
Connection of sealing liquid for mechanical seals 56
Packed stuffing box option 57
Connection of sealing liquid for a packed stuffing box 57
Dynamic-seal option 57
Set an elastomeric face seal 58
Pump priming 58
Prime the pump with the suction supply above the pump 58
Prime the pump with the suction supply below the pump 59
Other methods of priming the pump 60
Start the pump 60
Activate the i-ALERT Condition Monitor 61
i-ALERT™ Condition Monitor routine operation 62
Pump operation precautions 62
Shut down the pump 63
Deactivate the i-ALERT™ Condition Monitor 63
Reset the i-ALERT™ Condition Monitor 64
Make the final alignment of the pump and driver 64

Maintenance 65
Maintenance schedule 65
Bearing maintenance 66
Lubricating-oil requirements 66
Regrease the grease-lubricated bearings 67
Lubricate the bearings after a shutdown period 68
Shaft seal maintenance 68
Mechanical-seal maintenance 68
Packed stuffing-box maintenance 69
Dynamic-seal maintenance 69
Disassembly 70
Disassembly precautions 70
Tools required 70
Drain the pump 71
Remove the coupling 71
Remove the back pull-out assembly 71
Remove the coupling hub 73
Impeller removal 74
Seal-chamber cover removal 76
Remove the seal-chamber cover (3196, CV 3196, HT 3196, LF 3196, 3796) 76
Remove the stuffing-box cover (3196, CV 3196, HT 3196, LF 3196, 3796) 77
Remove the dynamic seal 78
Remove the frame adapter (MTi, LTi, XLT-i, i17) 79
Remove the inboard labyrinth oil seal 79
Power-end disassembly 79

Disassemble the bearing frame 88
Guidelines for i-ALERT™ Condition Monitor disposal 89
Disassemble the C-face adapter 89
Pre-assembly inspections 90
Replacement guidelines 90
Shaft and sleeve replacement guidelines 92
Bearing-frame inspection 92
C-face adapter inspection 93
Seal chamber and stuffing box cover inspection 94
Bearings inspection 95
Bearing-housing inspection 95
Bearing fits and tolerances 97
Reassembly 98
Assemble the rotating element and the bearing frame (STi and MTi) 98
Assemble the rotating element and the bearing frame (STi and MTi with duplex bearings) 100
Assemble the rotating element and the bearing frame (LTi) 103
Assemble the rotating element and the bearing frame (XLT-i and i17) 106
Assemble the rotating element and the bearing frame (XLT-i and i17 with duplex bearings) 109
Assemble the frame 113
INPRO labyrinth oil seal description 116
Assemble the INPRO labyrinth oil seal 117
Assemble the C-face adapter 117
Shaft sealing 118
Install the impeller 124
Attach the i-ALERT™ Condition Monitor to the pump 126
Post-assembly checks 127
Install the back pull-out assembly (except HT 3196) 127
Assembly references 129
Spare parts 130
Interchangeability drawings 130
3196 interchangeability 130
Lubrication conversion 131
Frame lubrication conversion 131
Convert from greased-for-life or regreaseable to oil-lubricated bearings 132
Conversion from flood-oil to pure-oil mist 133
Convert from flood oil to regreaseable 133

Troubleshooting 134
Operation troubleshooting 134
Alignment troubleshooting 135
Assembly troubleshooting 135
i-ALERT™ Condition Monitor troubleshooting 135

Parts Listings and Cross-Sectionals 136
Parts list 136

Certification: CE or CE ATEX 145
Certificates of conformance 145

Other Relevant Documentation or Manuals 151

Local ITT Contacts 152
Regional offices 152

Introduction and Safety

Introduction

Purpose of this manual

The purpose of this manual is to provide necessary information for:

- Installation
- Operation
- Maintenance

CAUTION:
Read this manual carefully before installing and using the product. Improper use of the product can cause personal injury and damage to property, and may void the warranty.

NOTICE:
Save this manual for future reference, and keep it readily available at the location of the unit.

Requesting other information

Special versions can be supplied with supplementary instruction leaflets. See the sales contract for any modifications or special version characteristics. For instructions, situations, or events that are not considered in this manual or in the sales documents, please contact the nearest ITT representative.

Always specify the exact product type and identification code when requesting technical information or spare parts.

Safety

WARNING:

- The operator must be aware of safety precautions to prevent physical injury.
- Any pressure-containing device can explode, rupture, or discharge its contents if it is over-pressurized. Take all necessary measures to avoid over-pressurization.
- Operating, installing, or maintaining the unit in any way that is not covered in this manual could cause death, serious personal injury, or damage to the equipment. This includes any modification to the equipment or use of parts not provided by ITT. If there is a question regarding the intended use of the equipment, please contact an ITT representative before proceeding.
- This manual clearly identifies accepted methods for disassembling units. These methods must be adhered to. Trapped liquid can rapidly expand and result in a violent explosion and injury. Never apply heat to impellers, propellers, or their retaining devices to aid in their removal unless explicitly stated in this manual.
- If the pump/motor is damaged or leaking, do not operate as it may cause an electric shock, fire, explosion, liberation of toxic fumes, physical harm, or environmental damage. Correct/repair the problem prior to putting back in service.
- Do not change the service application without the approval of an authorized ITT representative.

CAUTION:
You must observe the instructions contained in this manual. Failure to do so could result in physical injury, damage, or delays.

Safety terminology and symbols

About safety messages

It is extremely important that you read, understand, and follow the safety messages and regulations carefully before handling the product. They are published to help prevent these hazards:

- Personal accidents and health problems
- Damage to the product
- Product malfunction

Hazard levels

Hazard level	Indication
DANGER:	A hazardous situation which, if not avoided, will result in death or serious injury
WARNING:	A hazardous situation which, if not avoided, could result in death or serious injury
CAUTION:	A hazardous situation which, if not avoided, could result in minor or moderate injury
NOTICE:	• A potential situation which, if not avoided, could result in undesirable conditions • A practice not related to personal injury

Hazard categories

Hazard categories can either fall under hazard levels or let specific symbols replace the ordinary hazard level symbols.

Electrical hazards are indicated by the following specific symbol:

Electrical Hazard:

These are examples of other categories that can occur. They fall under the ordinary hazard levels and may use complementing symbols:

- Crush hazard
- Cutting hazard
- Arc flash hazard

The Ex symbol

The Ex symbol indicates safety regulations for Ex-approved products when used in atmospheres that are potentially explosive or flammable.

Environmental safety

The work area

Always keep the station clean to avoid and/or discover emissions.

Waste and emissions regulations

Observe these safety regulations regarding waste and emissions:

- Appropriately dispose of all waste.
- Handle and dispose of the processed liquid in compliance with applicable environmental regulations.
- Clean up all spills in accordance with safety and environmental procedures.
- Report all environmental emissions to the appropriate authorities.

WARNING:
Do NOT send the product to the ITT manufacturer if it has been contaminated by any nuclear radiation. Inform ITT so that accurate actions can take place.

Electrical installation

For electrical installation recycling requirements, consult your local electric utility.

Recycling guidelines

Always follow local laws and regulations regarding recycling.

User safety

General safety rules

These safety rules apply:

- Always keep the work area clean.
- Pay attention to the risks presented by gas and vapors in the work area.
- Avoid all electrical dangers. Pay attention to the risks of electric shock or arc flash hazards.
- Always bear in mind the risk of drowning, electrical accidents, and burn injuries.

Safety equipment

Use safety equipment according to the company regulations. Use this safety equipment within the work area:

- Helmet
- Safety goggles, preferably with side shields
- Protective shoes
- Protective gloves
- Gas mask
- Hearing protection
- First-aid kit
- Safety devices

NOTICE:
Never operate a unit unless safety devices are installed. Also see specific information about safety devices in other chapters of this manual.

Electrical connections

Electrical connections must be made by certified electricians in compliance with all international, national, state, and local regulations. For more information about requirements, see sections dealing specifically with electrical connections.

Precautions before work

Observe these safety precautions before you work with the product or are in connection with the product:

- Provide a suitable barrier around the work area, for example, a guard rail.
- Make sure that all safety guards are in place and secure.
- Make sure that you have a clear path of retreat.
- Make sure that the product cannot roll or fall over and injure people or damage property.
- Make sure that the lifting equipment is in good condition.
- Use a lifting harness, a safety line, and a breathing device as required.
- Allow all system and pump components to cool before you handle them.
- Make sure that the product has been thoroughly cleaned.
- Disconnect and lock out power before you service the pump.
- Check the explosion risk before you weld or use electric hand tools.

Precautions during work

Observe these safety precautions when you work with the product or are in connection with the product:

CAUTION:
Read this manual carefully before installing and using the product. Improper use of the product can cause personal injury and damage to property, and may void the warranty.

- Never work alone.
- Always wear protective clothing and hand protection.
- Stay clear of suspended loads.
- Always lift the product by its lifting device.
- Beware of the risk of a sudden start if the product is used with an automatic level control.
- Beware of the starting jerk, which can be powerful.
- Rinse the components in water after you disassemble the pump.
- Do not exceed the maximum working pressure of the pump.
- Do not open any vent or drain valve or remove any plugs while the system is pressurized. Make sure that the pump is isolated from the system and that pressure is relieved before you disassemble the pump, remove plugs, or disconnect piping.
- Never operate a pump without a properly installed coupling guard.

Hazardous liquids

The product is designed for use in liquids that can be hazardous to your health. Observe these rules when you work with the product:

- Make sure that all personnel who work with biologically hazardous liquids are vaccinated against diseases to which they may be exposed.
- Observe strict personal cleanliness.
- A small amount of liquid will be present in certain areas like the seal chamber.

Wash the skin and eyes

1. Follow these procedures for chemicals or hazardous fluids that have come into contact with your eyes or your skin:

Condition	Action
Chemicals or hazardous fluids in eyes	1. Hold your eyelids apart forcibly with your fingers. 2. Rinse the eyes with eyewash or running water for at least 15 minutes. 3. Seek medical attention.
Chemicals or hazardous fluids on skin	1. Remove contaminated clothing. 2. Wash the skin with soap and water for at least 1 minute. 3. Seek medical attention, if necessary.

Ex-approved products

Follow these special handling instructions if you have an Ex-approved unit.

Personnel requirements

These are the personnel requirements for Ex-approved products in potentially explosive atmospheres:

- All work on the product must be carried out by certified electricians and ITT-authorized mechanics. Special rules apply to installations in explosive atmospheres.
- All users must know about the risks of electric current and the chemical and physical characteristics of the gas, the vapor, or both present in hazardous areas.
- Any maintenance for Ex-approved products must conform to international and national standards (for example, IEC/EN 60079-17).

ITT disclaims all responsibility for work done by untrained and unauthorized personnel.

Product and product handling requirements

These are the product and product handling requirements for Ex-approved products in potentially explosive atmospheres:

- Only use the product in accordance with the approved motor data.
- The Ex-approved product must never run dry during normal operation. Dry running during service and inspection is only permitted outside the classified area.
- Before you start work on the product, make sure that the product and the control panel are isolated from the power supply and the control circuit, so they cannot be energized.
- Do not open the product while it is energized or in an explosive gas atmosphere.
- Make sure that thermal contacts are connected to a protection circuit according to the approval classification of the product, and that they are in use.
- Intrinsically safe circuits are normally required for the automatic level-control system by the level regulator if mounted in zone 0.
- The yield stress of fasteners must be in accordance with the approval drawing and the product specification.
- Do not modify the equipment without approval from an authorized ITT representative.
- Only use parts that are provided by an authorized ITT representative.

Product approval standards

Regular standards

All standard products are approved according to CSA standards in Canada and UL standards in USA. The drive unit degree of protection follows IP68. See the nameplate for maximum submersion, according to standard IEC 60529.

All electrical ratings and performance of the motors comply with IEC 600341.

Explosion-proofing standards

All explosion-proof products for use in explosive atmospheres are designed in compliance with one or more of the following approvals:

- EN, ATEX Directive 94/9/EC
- FM According to NEC
  - Class 1 Div 1 Groups “C”, and “D”
  - Class 2 Div 1 Groups “E”, “F”, and “G”
  - Class 3 Div 1 Hazardous Locations

ATEX/IECEx:

- Group: IIC

- Category: Ex ia
- Temperature Class: T4 (for ambients up to 100ºC)
- ATEX Marking: Ex II 1 G

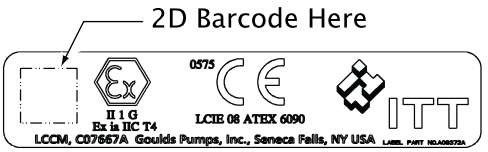

CSA certification

Intrinsically safe for:

- Class I, Div. 1, Groups A, B, C, D
- Class II, Div. 1, Groups E, F, G
- Class III
- Certified to Canadian and US requirements

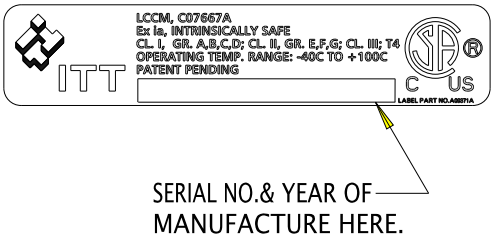

Product warranty

Coverage

ITT undertakes to remedy faults in products from ITT under these conditions:

- The faults are due to defects in design, materials, or workmanship.
- The faults are reported to an ITT representative within the warranty period.
- The product is used only under the conditions described in this manual.
- The monitoring equipment incorporated in the product is correctly connected and in use.
- All service and repair work is done by ITT-authorized personnel.
- Genuine ITT parts are used.
- Only Ex-approved spare parts and accessories authorized by ITT are used in Ex-approved products.

Limitations

The warranty does not cover faults caused by these situations:

- Deficient maintenance
- Improper installation
- Modifications or changes to the product and installation made without consulting ITT
- Incorrectly executed repair work
- Normal wear and tear

ITT assumes no liability for these situations:

- Bodily injuries
- Material damages
- Economic losses

Warranty claim

ITT products are high-quality products with expected reliable operation and long life. However, should the need arise for a warranty claim, then contact your ITT representative.

Transportation and Storage

Inspect the delivery

Inspect the package

1. Inspect the package for damaged or missing items upon delivery.
2. Note any damaged or missing items on the receipt and freight bill.
3. File a claim with the shipping company if anything is out of order.
   If the product has been picked up at a distributor, make a claim directly to the distributor.

Inspect the unit

1. Remove packing materials from the product.
   Dispose of all packing materials in accordance with local regulations.
2. Inspect the product to determine if any parts have been damaged or are missing.
3. If applicable, unfasten the product by removing any screws, bolts, or straps.
   For your personal safety, be careful when you handle nails and straps.
4. Contact your sales representative if anything is out of order.

Transportation guidelines

Pump handling

WARNING:

- Make sure that the unit cannot roll or fall over and injure people or damage property.
- These pumps might use carbon or ceramic silicon carbide components. Do not drop the pump or subject it to shock loads as this can damage the internal ceramic components.

NOTICE:

Use a forklift truck or an overhead crane with sufficient capacity to move the pallet with the pump unit on top. Failure to do so can result in equipment damage.

Lifting methods

WARNING:

- All lifting must be done in compliance with all applicable regulations/standards.
- Assembled units and their components are heavy. Failure to properly lift and support this equipment can result in serious physical injury and/or equipment damage. Lift equipment only at the specifically identified lifting points. Lifting devices such as hoist rings, shackles, slings, and spreaders must be rated, selected, and used for the entire load being lifted.
- Assembled units and their components are heavy. Failure to properly lift and support this equipment can result in serious physical injury and/or equipment damage. Lift equipment only at the specifically identified lifting points. Lifting devices such as eyebolts, slings, and spreaders must be rated, selected, and used for the entire load being lifted.
- Crush hazard. The unit and the components can be heavy. Use proper lifting methods and wear steel-toed shoes at all times.
- Do not attach sling ropes to shaft ends.

Table 1: Methods

Pump type	Lifting method
A bare pump without lifting handles	Use a suitable sling attached properly to solid points like the casing, the flanges, or the frames.
A bare pump with lifting handles	Lift the pump by the handles.
A base-mounted pump	Use slings under the pump casing and the drive unit, or under the base rails.

Pump type	Lifting method
Mounted on top of a Polyshield ANSI Combo	See separate information regarding the Polyshield ANSI Combo.

Examples

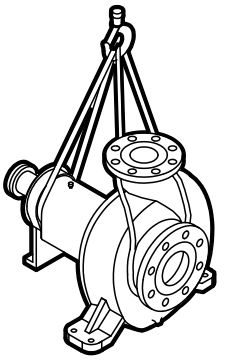

Figure 1: Example of a proper lifting method

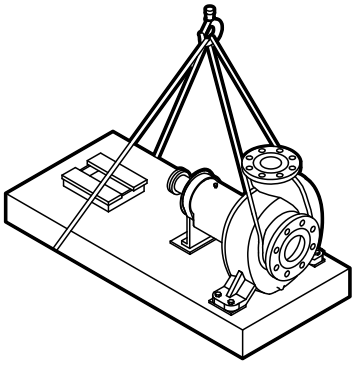

NOTICE:
Do not use this lifting method to lift a Polyshield ANSI Combo with the pump and motor mounted. Doing so may result in equipment damage.

Figure 2: Example of a proper lifting method

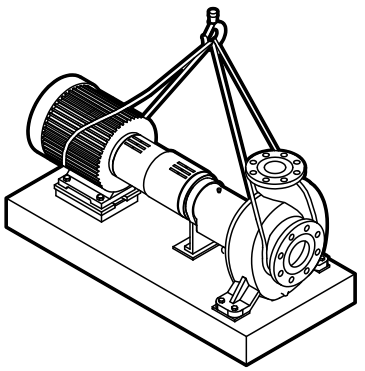

NOTICE:
Do not use this lifting method to lift a Polyshield ANSI Combo with the pump and motor mounted. Doing so may result in equipment damage.

Figure 3: Example of a proper lifting method

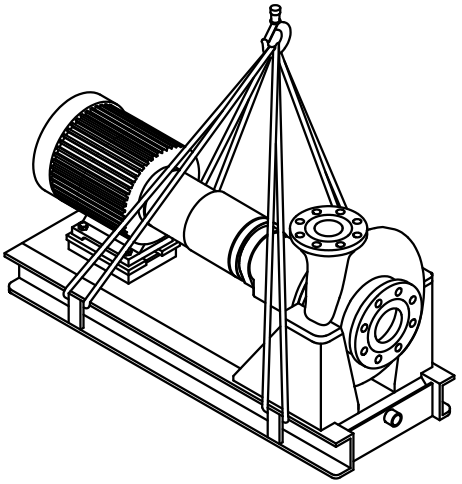

Figure 4: Example of a proper lifting method

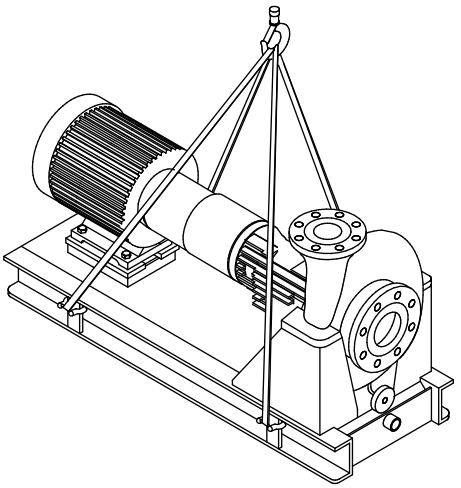

Figure 5: Example of a proper lifting method

NOTICE:
When lifting a unit that does not have a way to secure the strap on the suction flange, you must secure the strap around the frame adapter. Failure to do so may result in equipment damage.

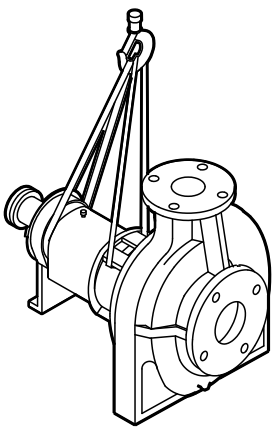

Figure 6: Example of a proper lifting method with a strap secured around the frame adapter

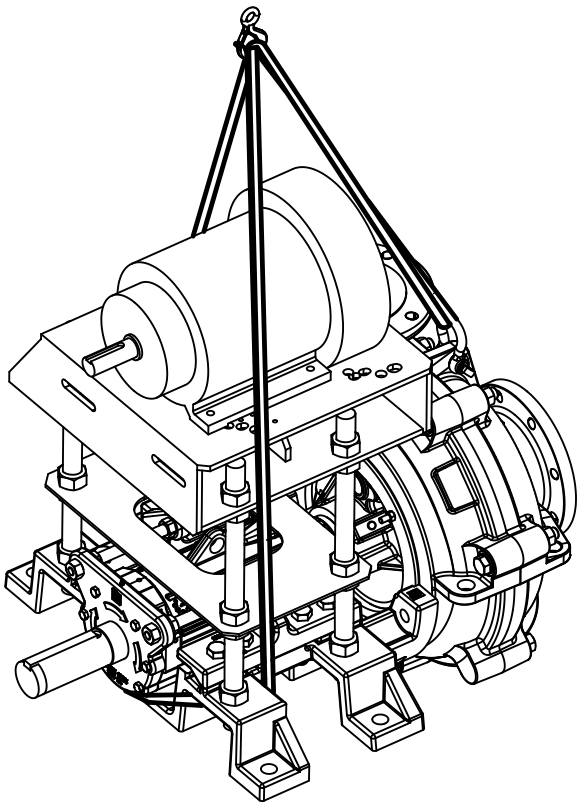

Figure 7: Example of offset overhead motor mount pump proper lifting method

Storage guidelines

Pump storage requirements

Storage requirements depend on the amount of time that you store the unit. The normal packaging is designed only to protect the unit during shipping.

Length of time in storage	Storage requirements
Upon receipt/short-term (less than six months)	• Store in a covered and dry location. • Store the unit free from dirt and vibrations.
Long-term (more than six months)	• Store in a covered and dry location. • Store the unit free from heat, dirt, and vibrations. • Rotate the shaft by hand several times at least every three months.

NOTICE:
Risk of damage to the mechanical seal or shaft sleeve on units supplied with cartridge mechanical seals. Make sure to install and tighten the centering clips and loosen the set screws in the seal locking ring.

Treat bearing and machined surfaces so that they are well preserved. Refer to drive unit and coupling manufacturers for their long-term storage procedures.

You can purchase long-term storage treatment with the initial unit order or you can purchase it and apply it after the units are already in the field. Contact your local ITT sales representative.

Frostproofing

Table 2: Situations when the pump is or is not frostproof

Situation	Condition
Operating	The pump is frostproof.
Immersed in a liquid	The pump is frostproof.
Lifted out of a liquid into a temperature below freezing	The impeller might freeze.

Product Description

General description 3196

The 3196 is a horizontal overhung, open impeller, centrifugal pump. This pump is ANSI B73.1 compliant.
The model is based on 5 power ends and 29 hydraulic sizes.

Figure 8: 3196 pump

This table shows the number of hydraulic sizes available for each drive-unit size group.

Drive-unit size group	Number of hydraulic sizes
STi	5
MTi	15
LTi	15
XLT-i	5
i-17	4

Part description 3196

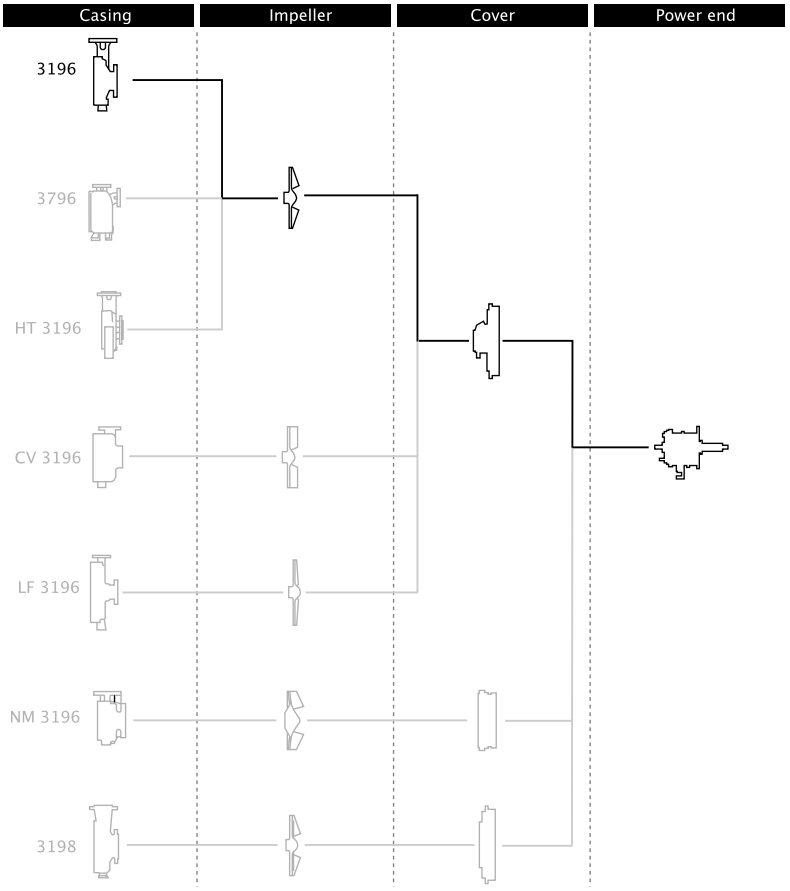

Figure 9: 3196 part description

Table 3: Casing

This table describes the pump casing parts.

Part	Description
Discharge	Top-centerline
Casing ventilation	Self venting
Gasket	Fully confined
Mounting method	Integral foot support for maximum resistance to misalignment due to piping loads.
Standard flange	ANSI flat-faced serrated flange
Optional flanges	One of the following flanges can be used: • ANSI class 150 raised-face serrated flange • ANSI class 300 flat-face serrated flange • ANSI class 300 raised-face serrated flange

Impeller

The impeller is

- fully open
- screwed onto the shaft

The threads are sealed from the pumped liquid by a Teflon O-ring for the 3196.

Cover

Standard seal

- The 3196 is available with a stuffing-box cover designed for a packing and a BigBore or a TaperBore PLUS seal chamber.

Optional seal

- a dynamic seal is available which uses a repeller to pump liquid out of the stuffing box while the pump operates. A static seal prevents leakage when the pump is shut down.

Table 4: Power end

This table describes the main parts of the power end.

Part	Description
Frame adapter	The ductile iron frame adapter has • a machined rabbet fitted to the seal chamber/ stuffing box cover • a precision dowel pin fitted to the bearing frame.

Power end	• Flood-oil lubrication is standard.
	• No machining is required to convert from oil to grease or oil-mist lubrication. Regreasable bearings and oil-mist lubrication are optional.
	• The oil level is checked through a sight glass.
	• The power end is sealed with labyrinth seals.
	• The power end is made in the following sizes:
	  • STi
	  • MTi
	  • LTi
	  • XLT-i
	  • i-17

Shaft	The shaft is available with or without a sleeve.
Bearings	The inboard bearing • carries only radial loads. • is free to float axially in the frame. • is a single-row deep-groove ball bearing The outboard bearing • is shouldered and locked to the shaft and housing to enable it to carry radial and thrust loads. • is a double-row angular-contact bearing, except for the LTi which uses a pair of single-row angular-contact ball bearings mounted back-to-back.

General description i-ALERT™ Condition Monitor

Description

The i-ALERT Condition Monitor is a compact, battery-operated monitoring device that continuously measures the vibration and temperature of the pump power end. The condition monitor uses blinking red LEDs to alert the pump operator when the pump exceeds pre-set vibration and temperature limits. This allows the pump operator to make changes to the process or the pump before a catastrophic failure occurs. The condition monitor is also equipped with a single green LED to indicate when it is operational and has sufficient battery life.

Software License Agreement

BY USING THE i-Alert™ CONDITION MONITOR, YOU AGREE TO BE BOUND BY THE TERMS AND CONDITIONS OF THE FOLLOWING LICENSE AGREEMENT. PLEASE READ THIS AGREEMENT CAREFULLY.

ITT Corporation and its subsidiaries, affiliates, either directly, or through its authorized sublicensees ("ITT") grants you a limited, non-exclusive license to use the software embedded in this device ("Software") in binary executable form in the normal operation of the i-Alert™ condition monitor for monitoring the condition of an Goulds Pump Inc. model. Title, ownership rights, and intellectual property rights in and to the Software remain in ITT or its third-party providers. You agree that this license agreement does not need to be signed for it to take effect.

You acknowledge that this Software is the property of ITT and is protected under United States of America copyright laws and international copyright treaties. You further acknowledge that the structure, organization, and code of the Software are valuable trade secrets of ITT and/or its third-party providers and that the Software in source code form remains a valuable trade

secret of ITT. You agree not to decompile, disassemble, modify, reverse assemble, reverse engineer, or reduce to human readable form the Software or any part thereof or create any derivative works based on the Software. You agree not to export or re-export the Software to any country in violation of the export control laws of the United States of America.

Alarm mode

The condition monitor enters alarm mode when either vibration or temperature limits are exceeded over two consecutive readings within a ten minute period. Alarm mode is indicated with two red flashing LEDs within two second intervals.

Temperature and vibration limits

Variable	Limit
Temperature	195°F (91°C)
Vibration	100% increase over the baseline level

Battery life

The i-ALERT Condition Monitor battery is not replaceable. You must replace the entire unit once the battery runs out of power.

The battery life is not covered as part of the standard five-year pump warranty.

This table shows the average condition monitor battery life under normal and alarm-mode operating conditions.

Condition monitor operational state	Battery life
Normal operating and environmental conditions	Three to five years
Alarm mode	One year

Nameplate information

Important information for ordering

Every pump has nameplates that provide information about the pump. The nameplates are located on the casing and the bearing frame.

When you order spare parts, identify this pump information:

- Model
- Size
- Serial number
- Item numbers of the required parts

Refer to the nameplate on the pump casing for most of the information. See Parts List for item numbers.

Nameplate types

Nameplate	Description
Pump casing	Provides information about the hydraulic characteristics of the pump. The formula for the pump size is: Discharge x Suction - Nominal Maximum Impeller Diameter in inches. (Example: 2x3-8)
Bearing frame	Provides information about the lubrication system used.
ATEX	If applicable, your pump unit might have an ATEX nameplate affixed to the pump, the baseplate, or the discharge head. The nameplate provides information about the ATEX specifications of this pump.
IECEx	If applicable, your pump unit might have the following IECEx nameplate affixed to the pump and/or baseplate. The nameplate provides information about the IECEx specifications of this pump.

Nameplate on the pump casing using English units

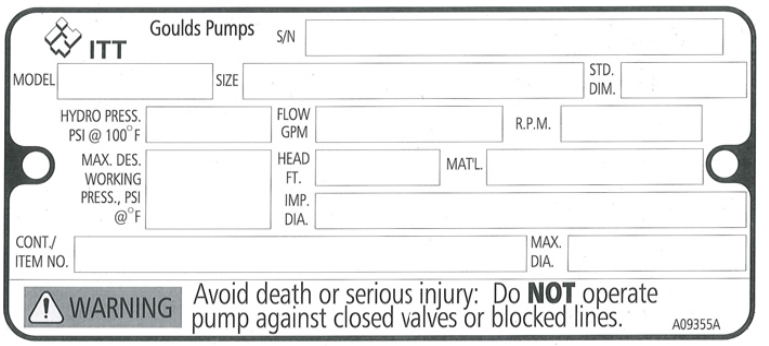

Table 5: Explanation of nameplate on the pump casing

Nameplate field	Explanation
IMPLR. DIA.	Impeller diameter, in inches
MAX. DIA.	Maximum impeller diameter, in inches
GPM	Rated pump flow, in gallons per minute
FT HD	Rated pump head, in feet
RPM	Rated pump speed, revolutions per minute
MOD.	Pump model
SIZE	Size of the pump
STD. NO.	ANSI standard designation
MAT L. CONST.	Material of which the pump is constructed
SER. NO.	Serial number of the pump
MAX DSGN PSI @ 100ºF	Maximum pressure at 100ºF according to the pump design

Nameplate on the pump casing using metric units

Table 6: Explanation of the nameplate on the pump casing

Nameplate field	Explanation
IMPLR. DIA.	Impeller diameter
MAX. DIA.	Maximum impeller diameter
M^3/HR	Rated pump flow, in cubic meters per hour
M HD	Rated pump head, in meters
RPM	Rated pump speed, in revolutions per minute
MOD.	Pump model
SIZE	Size of the pump
STD. NO.	ANSI standard designation
MAT L. CONST	Material of which the pump is constructed
SER. NO.	Serial number of the pump
MAX. DSGN KG/CM^3 @ 20°C	Kilograms per cubic centimeter at 20°C

Nameplate on the bearing frame

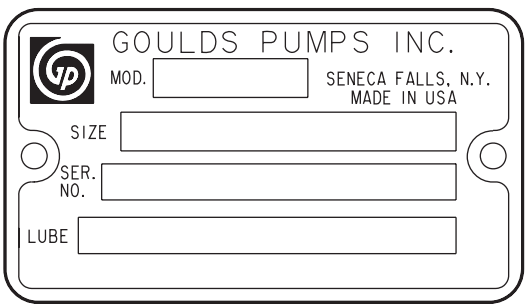

Table 7: Explanation of the nameplate on the bearing frame

Nameplate field	Explanation
BRG. O. B.	Outboard bearing designation
BRG. I. B.	Inboard bearing designation
S/N	Serial number of the pump
LUBE	Lubricant, oil or grease

ATEX nameplate

Nameplate field	Explanation
II	Group 2
2	Category 2
G/D	Pump can be used when gas and dust are present
T4	Temperature class

NOTICE:
Make sure that the code classifications on the pump are compatible with the specific environment in which you plan to install the equipment. If they are not compatible, do not operate the equipment and contact your ITT representative before you proceed.

Installation

Preinstallation

Precautions

WARNING:

- When installing in a potentially explosive environment, make sure that the motor is properly certified.
- You must earth (ground) all electrical equipment. This applies to the pump equipment, the driver, and any monitoring equipment. Test the earth (ground) lead to verify that it is connected correctly.
- Electrical Connections must be made by certified electricians in compliance with all international, national, state, and local rules.

NOTICE:

Supervision by an authorized ITT representative is recommended to ensure proper installation. Failure to do so may result in equipment damage or decreased performance.

Pump location guidelines

WARNING:

Assembled units and their components are heavy. Failure to properly lift and support this equipment can result in serious physical injury and/or equipment damage. Lift equipment only at the specifically identified lifting points. Lifting devices such as eyebolts, slings, and spreaders must be rated, selected, and used for the entire load being lifted.

Guideline	Explanation/comment
Keep the pump as close to the liquid source as practically possible.	This minimizes the friction loss and keeps the suction piping as short as possible.
Make sure that the space around the pump is sufficient.	This facilitates ventilation, inspection, maintenance, and service.
If you require lifting equipment such as a hoist or tackle, make sure that there is enough space above the pump.	This makes it easier to properly use the lifting equipment and safely remove and relocate the components to a safe location.
Protect the unit from weather and water damage due to rain, flooding, and freezing temperatures.	This is applicable if nothing else is specified.
Do not install and operate the equipment in closed systems unless the system is constructed with properly-sized safety devices and control devices.	Acceptable devices: • Pressure relief valves • Compression tanks • Pressure controls • Temperature controls • Flow controls If the system does not include these devices, consult the engineer or architect in charge before you operate the pump.
Take into consideration the occurrence of unwanted noise and vibration.	The best pump location for noise and vibration absorption is on a concrete floor with subsoil underneath.
If the pump location is overhead, undertake special precautions to reduce possible noise transmission.	Consider a consultation with a noise specialist.

Foundation requirements

Requirements

- The foundation must be able to absorb any type of vibration and form a permanent, rigid support for the unit.
- The location and size of the foundation bolt holes must match those shown on the assembly drawing provided with the pump data package.
- The foundation must weigh between two and three times the weight of the pump.

- Provide a flat, substantial concrete foundation in order to prevent strain and distortion when you tighten the foundation bolts.
- Sleeve-type and J-type foundation bolts are most commonly used. Both designs allow movement for the final bolt adjustment.

Sleeve-type bolts

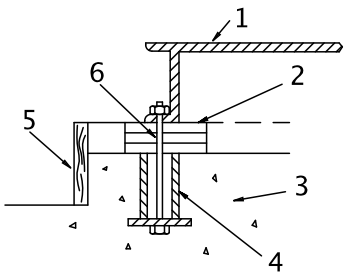

1. Baseplate
2. Shims or wedges
3. Foundation
4. Sleeve
5. Dam
6. Bolt

J-type bolts

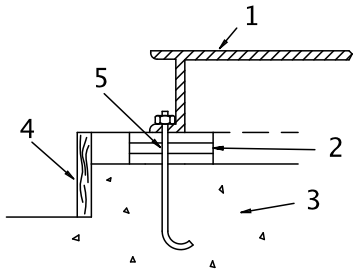

1. Baseplate
2. Shims or wedges
3. Foundation
4. Dam
5. Bolt

Baseplate-mounting procedures

Prepare the baseplate for mounting

1. Remove all the attached equipment from the baseplate.
2. Clean the underside of the baseplate completely.
3. If applicable, coat the underside of the baseplate with an epoxy primer.
   Use an epoxy primer only if you used an epoxy-based grout.
4. Remove the rust-proofing coat from the machined mounting pads using an appropriate solvent.
5. Remove water and debris from the foundation-bolt holes.

Install the baseplate using shims or wedges

Required tools:

- Two sets of shims or wedges for each foundation bolt
- Two machinist's levels

- Baseplate-leveling worksheet

This procedure is applicable to cast iron and fabricated steel baseplates.

1. If you use sleeve-type bolts, fill the bolt sleeves with packing material or rags to prevent grout from entering the bolt holes.
2. Put the sets of wedges or shims on each side of each foundation bolt.
   The sets of wedges should have a height of between 0.75 in. (19 mm) and 1.50 in. (38 mm).

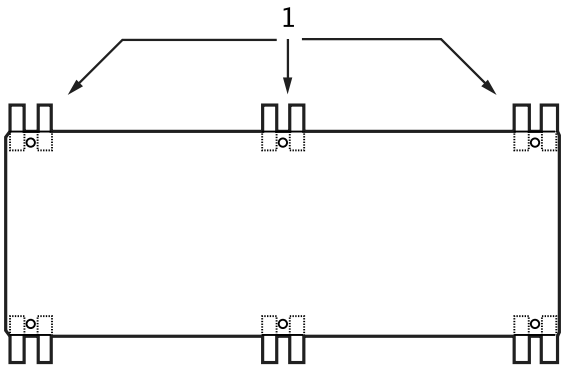

1. Shims or wedges

Figure 10: Top view

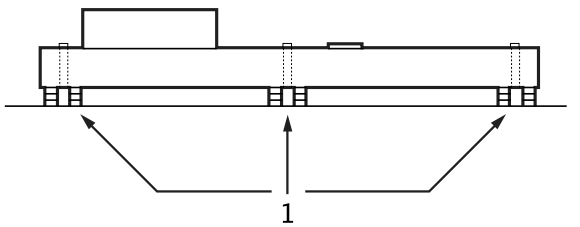

1. Shims or wedges

Figure 11: Side view

3. Lower the baseplate carefully onto the foundation bolts.
4. Put the machinist's levels across the mounting pads of the driver and the mounting pads of the pump.

NOTICE:
Remove all dirt from the mounting pads in order to make sure that you achieve the correct leveling. Failure to do so can result in equipment damage or decreased performance.

5. Level the baseplate both lengthwise and across by adding or removing shims or moving the wedges.
   These are the leveling tolerances:
   - A maximum difference of 0.125 in. (3.2 mm) lengthwise
   - A maximum difference of 0.059 in. (1.5 mm) across

   You can use the baseplate-leveling worksheet when you take the readings.
6. Hand-tighten the nuts for the foundation.

Install the baseplate using jackscrews

Tools required:

- Anti-seize compound
- Jackscrews
- Bar stock
- Two machinist's levels

- Baseplate-leveling worksheet

This procedure is applicable to the feature-fabricated steel baseplate and the advantage base baseplate.

1. Apply an anti-seize compound on the jackscrews.
   The compound makes it easier to remove the screws after you grout.
2. Lower the baseplate carefully onto the foundation bolts and perform these steps:
   a) Cut the plates from the bar stock and chamfer the edges of the plates in order to reduce stress concentrations.
   b) Put the plates between the jackscrews and the foundation surface.
   c) Use the four jackscrews in the corners in order to raise the baseplate above the foundation.
      Make sure that the distance between the baseplate and the foundation surface is between 0.75 in. (19 mm) and 1.50 in. (38 mm).
   d) Make sure that the center jackscrews do not touch the foundation surface yet.

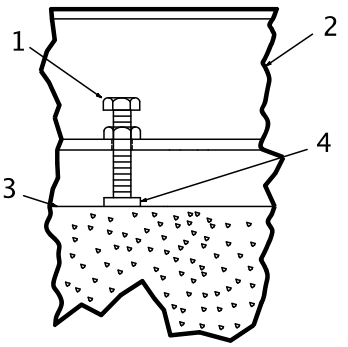

1. Jackscrew
2. Baseplate
3. Foundation
4. Plate

3. Level the driver mounting pads:

NOTICE:
Remove all dirt from the mounting pads in order to make sure that you achieve the correct leveling. Failure to do so can result in equipment damage or decreased performance.

   a) Put one machinist's level lengthwise on one of the two pads.
   b) Put the other machinist's level across the ends of the two pads.

c) Level the pads by adjusting the four jackscrews in the corners.
Make sure that the machinist's level readings are as close to zero as possible, both lengthwise and across.
Use the baseplate-leveling worksheet when you take the readings.

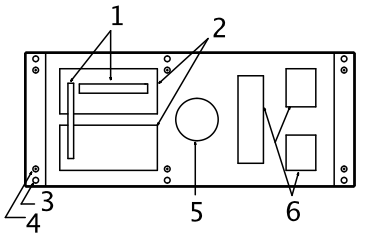

1. Machinist's levels
2. Driver's mounting pads
3. Foundation bolts
4. Jackscrews
5. Grout hole
6. Pump's mounting pads

4. Turn the center jackscrews down so that they rest on their plates on the foundation surface.
5. Level the pump mounting pads:

NOTICE:
Remove all dirt from the mounting pads in order to make sure that you achieve the correct leveling. Failure to do so can result in equipment damage or decreased performance.

a) Put one machinist's level lengthwise on one of the two pads.
b) Put the other level across the center of the two pads.
c) Level the pads by adjusting the four jackscrews in the corners.
Make sure that the machinist's level readings are as close to zero as possible, both lengthwise and across.

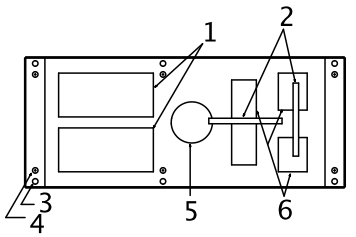

1. Driver's mounting pads
2. Machinist's levels
3. Foundation bolts
4. Jackscrews
5. Grout hole
6. Pump's mounting pads

6. Hand-tighten the nuts for the foundation bolts.
7. Check that the driver's mounting pads are level and adjust the jackscrews and the foundation bolts if necessary.
The correct level measurement is a maximum of 0.002 in./ft (0.0167 mm/m).

Install the baseplate using spring mounting

NOTICE:
The spring-mounted baseplate is designed only to support piping loads from thermal expansion. You must support the suction and discharge piping individually. Failure to do so may result in equipment damage.

The foundation pads are not provided with the baseplate. Make sure that the foundation pads are 316 stainless-steel plates, which have a 16-20 micro-inch surface finish.

Before you start this procedure, make sure that the foundation pads are correctly installed on the foundation/floor (see the manufacturer's instructions).

1. Put the baseplate on a support above the foundation/floor.
   Make sure that there is enough space between the baseplate and the foundation/floor in order to install the spring assemblies.
2. Install the lower part of the spring assembly:
   a) Screw the lower jam nut onto the spring stud.
   b) Screw the lower adjusting nut onto the spring-stud, on top of the jam nut.
   c) Set the lower adjusting nut to the correct height.
      The correct height depends on the required distance between the foundation/floor and the baseplate.
   d) Put a washer, a follower, a spring, and one more follower onto the lower adjusting nut.
3. Install the spring assembly on the baseplate:
   a) Insert the spring assembly into the baseplate's anchorage hole from below.
   b) Put a follower, a spring, another follower, and a washer onto the spring stud.
   c) Fasten the spring assembly with the upper adjusting nut by hand.
4. Thread the upper jam nut onto the spring stud by hand.
5. Repeat steps 2 through 4 for all the spring assemblies.
6. Lower the baseplate so that the spring assemblies fit into the foundation pads.
7. Level the baseplate and make the final height adjustments:
   a) Loosen the upper jam nuts and adjusting nuts.
   b) Adjust the height and level the baseplate by moving the lower adjusting nuts.
   c) When the baseplate is level, tighten the top adjusting nuts so that the top springs are not loose in their followers.
8. Fasten the lower and upper jam nuts on each spring assembly.

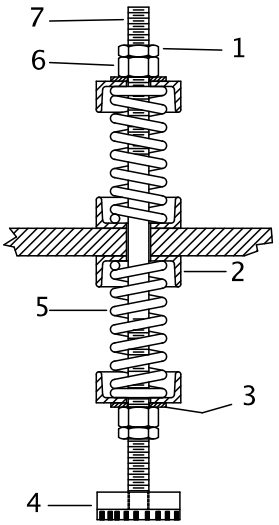

1. Upper jam nut
2. Follower
3. Washer
4. Foundation pads
5. Spring
6. Upper adjusting nut
7. Spring stud

Figure 12: Example of an installed spring assembly

Install the baseplate using stilt mounting

NOTICE:
The stilt-mounted baseplate is not designed to support static piping loads. Make sure to individually support the suction and discharge piping. Failure to do so may result in equipment damage.

1. Put the baseplate on a support above the foundation/floor.
   Make sure that there is enough space between the baseplate and the foundation/floor to install the stilts.
2. Install the lower part of the stilt assembly:
   a) Screw the lower jam nut and adjusting nut onto the stilt.
   b) Set the lower adjusting nut to the correct height.
      The correct height depends on the required distance between the foundation/floor and the baseplate.
   c) Put a washer onto the lower adjusting- nut.
3. Install the stilt assembly on the baseplate:
   a) Insert the stilt assembly into the baseplate's anchorage hole from below.
   b) Put a washer onto the stilt.
   c) Fasten the stilt assembly with the upper adjusting nut by hand.
4. Screw the upper jam nut onto the stilt by hand.
5. Repeat steps 2 through 4 for all the stilt assemblies.
6. Lower the baseplate so that the stilts fit into the foundation cups.
7. Level the baseplate and make the final height adjustments:
   a) Loosen the upper jam nuts and adjusting nuts.
   b) Adjust the height and level the baseplate by moving the lower adjusting nuts.
   c) When the baseplate is level, tighten the top adjusting nuts.
8. Fasten the lower and upper jam nuts on each stilt.

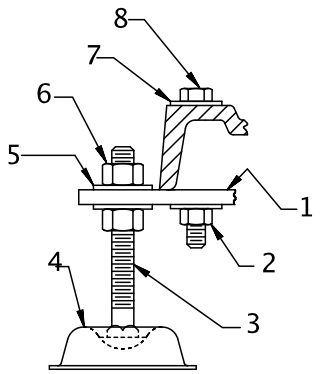

1. Mounting plate
2. Mounting nut
3. Stilt bolt
4. Foundation cups
5. Washer
6. Upper adjustment nut
7. Mounting washer
8. Mounting bolt

Figure 13: Example of an installed stilt assembly

Baseplate-leveling worksheet

Level measurements

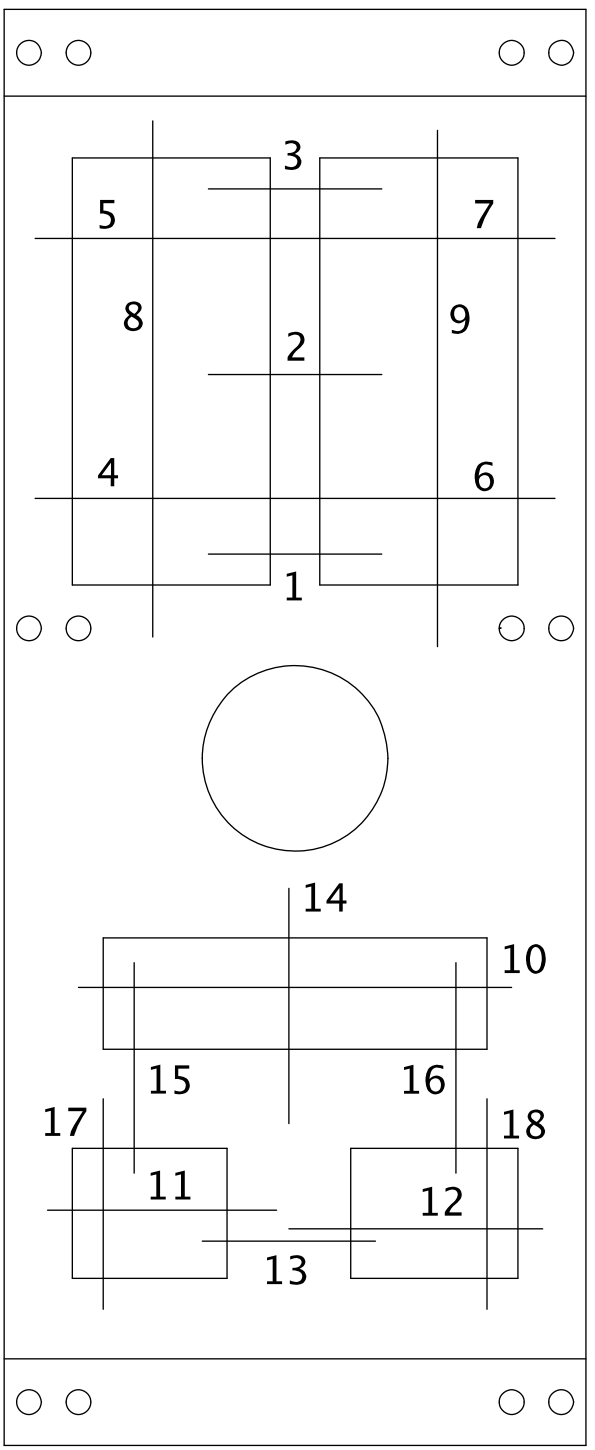

1)_____

2)_____

3)_____

4)_____

5)_____

6)_____

7)_____

8)_____

9)_____

10)_____

11)_____

12)_____

13)_____

14)_____

15)_____

16)_____

17)_____

18)_____

Install the pump, driver, and coupling

1. Mount and fasten the pump on the baseplate. Use applicable bolts.
2. Mount the driver on the baseplate. Use applicable bolts and hand tighten.
3. Install the coupling.
   See the installation instructions from the coupling manufacturer.

Pump-to-driver alignment

Precautions

WARNING:

- Follow shaft alignment procedures in order to prevent catastrophic failure of drive components or unintended contact of rotating parts. Follow the coupling installation and operation procedures from the coupling manufacturer.
- Always disconnect and lock out power to the driver before you perform any installation or maintenance tasks. Failure to disconnect and lock out driver power will result in serious physical injury.
  - Electrical connections must be made by certified electricians in compliance with all international, national, state, and local rules.
  - Refer to driver/coupling/gear manufacturers installation and operation manuals (IOM) for specific instructions and recommendations.

NOTICE:

Proper alignment is the responsibility of the installer and the user of the unit. Check the alignment of frame-mounted units before you operate the unit. Failure to do so can result in equipment damage or decreased performance.

Alignment checks

When to perform alignment checks

You must perform alignment checks under these circumstances:

- The process temperature changes.
- The piping changes.
- The pump has been serviced.

Types of alignment checks

Type of check	When it is used
Initial alignment (cold alignment) check	Prior to operation when the pump and the driver are at ambient temperature.
Final alignment (hot alignment) check	After operation when the pump and the driver are at operating temperature.

Initial alignment (cold alignment) checks

When	Why
Before you grout the baseplate	This ensures that alignment can be accomplished.
After you grout the baseplate	This ensures that no changes have occurred during the grouting process.
After you connect the piping	This ensures that pipe strains have not altered the alignment. If changes have occurred, you must alter the piping to remove pipe strains on the pump flanges.

Final alignment (hot alignment) checks

When	Why
After the first run	This ensures correct alignment when both the pump and the driver are at operating temperature.

When	Why
Periodically	This follows the plant operating procedures.

Permitted indicator values for alignment checks

NOTICE:
The specified permitted reading values are valid only at operating temperature. For cold settings, other values are permitted. You must use the correct tolerances. Failure to do so can result in misalignment and reduced pump reliability.

When dial indicators are used to check the final alignment, the pump and drive unit are correctly aligned when these conditions are true:

- The total indicator runout is a maximum of 0.002 in. (0.05 mm) at operating temperature.
- The tolerance of the indicator is 0.0005 in./in. (0.0127 mm/mm) of indicator separation at operating temperature.

Cold settings for parallel vertical alignment

Introduction

This section shows the recommended preliminary (cold) settings for electric motor-driven pumps based on different temperatures of pumped fluid. Consult driver manufacturers for recommended cold settings for other types of drivers such as steam turbines and engines.

Recommended settings for models 3196, CV 3196, and LF 3196

Pumpage temperature	Recommended setting
50°F (10°C)	0.002 in. (0.05 mm), low
150°F (65°C)	0.001 in. (0.03 mm), high
250°F (120°C)	0.005 in. (0.12 mm), high
350°F (175°C)	0.009 in. (0.23 mm), high
450°F (218°C)	0.013 in. (0.33 mm), high
550°F (228°C)	0.017 in. (0.43 mm), high
650°F (343°C)	0.021 in. (0.53 mm), high
700°F (371°C)	0.023 in. (0.58 mm), high

Alignment measurement guidelines

Guideline	Explanation
Rotate the pump coupling half and the driver coupling half together so that the indicator rods have contact with the same points on the driver coupling half.	This prevents incorrect measurement.
Move or shim only the driver in order to make adjustments.	This prevents strain on the piping installations.
Make sure that the hold-down bolts for the driver feet are tight when you take indicator measurements.	This keeps the driver stationary since movement causes incorrect measurement.
Make sure that the hold-down bolts for the driver feet are loose before you make alignment corrections.	This makes it possible to move the driver when you make alignment corrections.
Check the alignment again after any mechanical adjustments.	This corrects any misalignments that an adjustment may have caused.

Attach the dial indicators for alignment

You must have two dial indicators in order to complete this procedure.

1. Attach two dial indicators on the pump coupling half (X):
   a) Attach one indicator (P) so that the indicator rod comes into contact with the perimeter of the driver coupling half (Y).
   This indicator is used to measure parallel misalignment.

b) Attach the other indicator (A) so that the indicator rod comes into contact with the inner end of the driver coupling half.
This indicator is used to measure angular misalignment.

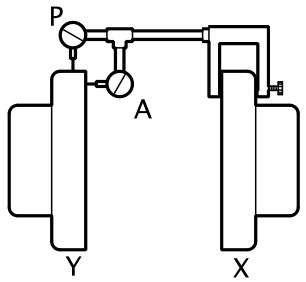

2. Rotate the pump coupling half (X) in order to check that the indicators are in contact with the driver coupling half (Y) but do not bottom out.
3. Adjust the indicators if necessary.

Pump-to-driver alignment instructions

Perform angular alignment for a vertical correction

1. Set the angular alignment indicator to zero at the top-center position (12 o'clock) of the driver coupling half (Y).
2. Rotate the indicator to the bottom-center position (6 o'clock).
3. Record the indicator reading.

When the reading value is...	Then...
Negative	The coupling halves are farther apart at the bottom than at the top. Perform one of these steps: • Add shims in order to raise the feet of the driver at the shaft end. • Remove shims in order to lower the feet of the driver at the other end.
Positive	The coupling halves are closer at the bottom than at the top. Perform one of these steps: • Remove shims in order to lower the feet of the driver at the shaft end. • Add shims in order to raise the feet of the driver at the other end.

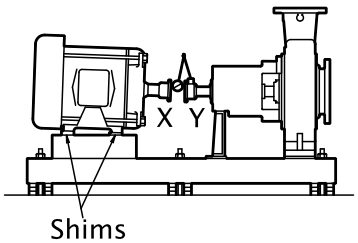

Figure 14: Side view of an incorrect vertical alignment

4. Repeat the previous steps until the permitted reading value is achieved.

Perform angular alignment for a horizontal correction

1. Set the angular alignment indicator (A) to zero on left side of the driver coupling half (Y), 90° from the top-center position (9 o'clock).
2. Rotate the indicator through the top-center position to the right side, 180° from the start position (3 o'clock).
3. Record the indicator reading.

When the reading value is...	Then...
Negative	The coupling halves are farther apart on the right side than the left. Perform one of these steps: • Slide the shaft end of the driver to the left. • Slide the opposite end to the right.
Positive	The coupling halves are closer together on the right side than the left. Perform one of these steps: • Slide the shaft end of the driver to the right. • Slide the opposite end to the left.

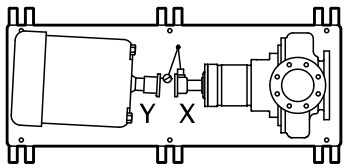

Figure 15: Top view of an incorrect horizontal alignment

4. Repeat the previous steps until the permitted reading value is achieved.

Perform parallel alignment for a vertical correction

Refer to the alignment table in "Permitted indicator values for alignment checks" (see Table of Contents for location of table) for the proper cold alignment value based on the motor temperature rise and the pump operating temperature.

Before you start this procedure, make sure that the dial indicators are correctly set up.

A unit is in parallel alignment when the parallel indicator (P) does not vary by more than 0.002 in. (0.05 mm) as measured at four points 90° apart at the operating temperature.

1. Set the parallel alignment indicator (P) to zero at the top-center position (12 o'clock) of the driver coupling half (Y).
2. Rotate the indicator to the bottom-center position (6 o'clock).
3. Record the indicator reading.

When the reading value is...	Then...
Negative	The pump coupling half (X) is lower than the driver coupling half (Y). Remove shims of a thickness equal to half of the indicator reading value under each driver foot.
Positive	The pump coupling half (X) is higher than the driver coupling half (Y). Add shims of a thickness equal to half of the indicator reading value to each driver foot.

NOTICE:

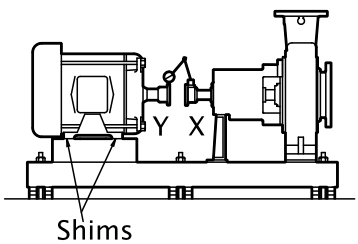

Figure 16: Side view of an incorrect vertical alignment

4. Repeat the previous steps until the permitted reading value is achieved.

NOTICE:
The specified permitted reading values are valid only at operating temperature. For cold settings, other values are permitted. You must use the correct tolerances. Failure to do so can result in misalignment and reduced pump reliability.

Perform parallel alignment for a horizontal correction

A unit is in parallel alignment when the parallel indicator (P) does not vary by more than 0.002 in. (0.05 mm) as measured at four points 90° apart at the operating temperature.

1. Set the parallel alignment indicator (P) to zero on the left side of the driver coupling half (Y), 90° from the top-center position (9 o'clock).
2. Rotate the indicator through the top-center position to the right side, 180° from the start position (3 o'clock).
3. Record the indicator reading.

When the reading value is...	Then...
Negative	The driver coupling half (Y) is to the left of the pump coupling half (X).
Positive	The driver coupling half (Y) is to the right of the pump coupling half (X).

4. Slide the driver carefully in the appropriate direction.

NOTICE: Make sure to slide the driver evenly. Failure to do so can negatively affect horizontal angular correction.

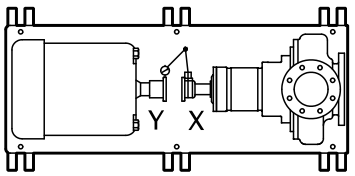

Figure 17: Top view of an incorrect horizontal alignment

5. Repeat the previous steps until the permitted reading value is achieved.

NOTICE:
The specified permitted reading values are valid only at operating temperature. For cold settings, other values are permitted. You must use the correct tolerances. Failure to do so can result in misalignment and reduced pump reliability.

Perform complete alignment for a vertical correction

A unit is in complete alignment when both the angular indicator (A) and the parallel indicator (P) do not vary by more than 0.002 in. (0.05 mm) as measured at four points 90° apart.

1. Set the angular and parallel dial indicators to zero at the top-center position (12 o'clock) of the driver coupling half (Y).
2. Rotate the indicators to the bottom-center position (6 o'clock).
3. Record the indicator readings.
4. Make corrections according to the separate instructions for angular and parallel alignment until you obtain the permitted reading values.

Perform complete alignment for a horizontal correction

A unit is in complete alignment when both the angular indicator (A) and the parallel indicator (P) do not vary by more than 0.002 in. (0.05 mm) as measured at four points 90° apart.

1. Set the angular and parallel dial indicators to zero at the left side of the driver coupling half (Y), 90° from the top-center position (9 o'clock).

2. Rotate the indicators through the top-center position to the right side, 180° from the start position (3 o'clock).
3. Record the indicator readings.
4. Make corrections according to the separate instructions for angular and parallel alignment until you obtain the permitted reading values.

C-face adapter

Intended use

The C-face adapter is a device that attaches the pump to the drive unit to minimize the axial and radial play between the two coupling halves.

Illustration

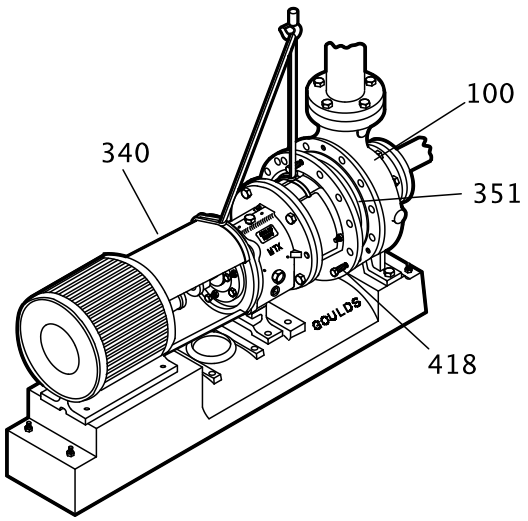

Figure 18: Example of the C-face adapter (340)

Alignment requirements

When you use a C-face adapter, you do not have to align the shaft. The rabbeted fittings of the drive unit to the adapter and the adapter to the bearing frame automatically align the shaft to within the specified limits.

Specified limits

A C-face adapter can attain a nominal alignment of 0.007 in. Total Indicated Runout (T.I.R.). However, because of the stack-up of the machining tolerances of the various parts, the alignment can be as high as 0.015 inches TIR.

If high reliability (with shaft alignments of less than 0.002 in. (0.05mm)) is required for the pump, use a foot-mounted drive unit on a precision-machined baseplate and perform a conventional alignment.

Grout the baseplate

Required equipment:

- Cleaners: Do not use an oil-based cleaner because the grout will not bond to it. See the instructions provided by the grout manufacturer.
- Grout: Non-shrink grout is recommended.

1. Clean all the areas of the baseplate that will come into contact with the grout.
2. Build a dam around the foundation.
3. Thoroughly wet the foundation that will come into contact with the grout.
4. Pour grout through the grout hole into the baseplate up to the level of the dam.

When you pour the grout, remove air bubbles from it by using one of these methods:

- Puddle with a vibrator.
- Pump the grout into place.

5. Allow the grout to set.

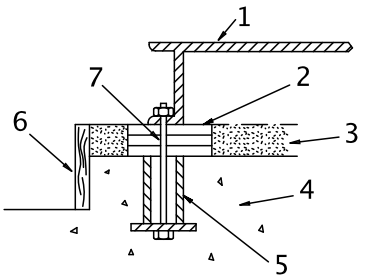

1. Baseplate
2. Shims or wedges
3. Grout
4. Foundation
5. Sleeve
6. Dam
7. Bolt

6. Fill the remainder of the baseplate with grout, and allow the grout to set for at least 48 hours.

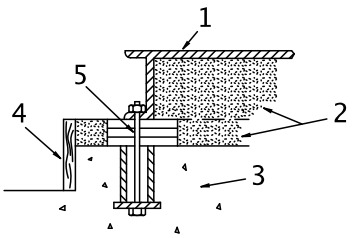

1. Baseplate
2. Grout
3. Foundation
4. Dam
5. Bolt

7. Tighten the foundation bolts.

Piping checklists

General piping checklist

Precautions

CAUTION:

- Never draw piping into place by using force at the flanged connections of the pump. This can impose dangerous strains on the unit and cause misalignment between the pump and driver. Pipe strain adversely affects the operation of the pump, which results in physical injury and damage to the equipment.
- Vary the capacity with the regulating valve in the discharge line. Never throttle the flow from the suction side. This action can result in decreased performance, unexpected heat generation, and equipment damage.

CAUTION:

Piping guidelines

Guidelines for piping are given in the Hydraulic Institute Standards available from the Hydraulic Institute at 9 Sylvan Way, Parsippany, NJ 07054-3802. You must review this document before you install the pump.

Checklist

Check	Explanation/comment	Checked
Check that all piping is supported independently of, and lined up naturally with, the pump flange.	This helps to prevent: • Strain on the pump • Misalignment between the pump and the drive unit • Wear on the pump bearings and the coupling • Wear on the pump bearings, seal, and shafting	
Keep the piping as short as possible.	This helps to minimize friction losses.	
Check that only necessary fittings are used.	This helps to minimize friction losses.	
Do not connect the piping to the pump until: • The grout for the baseplate or sub-base becomes hard. • The hold-down bolts for the pump and the driver are tightened.	—	
Make sure that all the piping joints and fittings are airtight.	This prevents air from entering the piping system or leaks that occur during operation.	
If the pump handles corrosive fluids, make sure that the piping allows you to flush out the liquid before you remove the pump.		
If the pump handles liquids at elevated temperatures, make sure that the expansion loops and joints are properly installed.	This helps to prevent misalignment due to linear expansion of the piping.	

Example: Installation for expansion

Correct	Incorrect
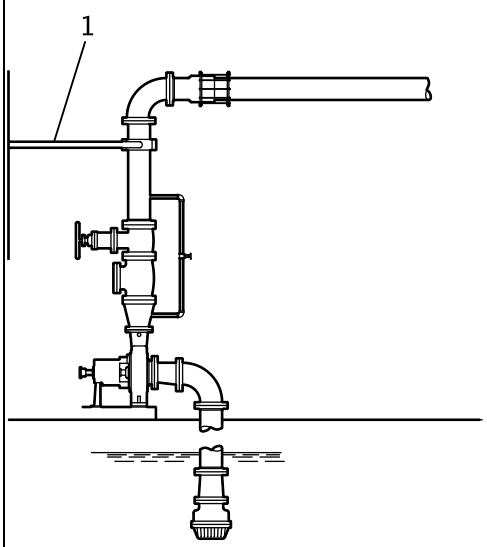 1. Expansion loop/joint	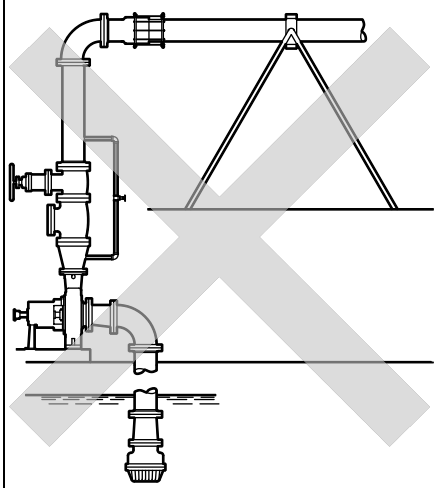

Fastening

WARNING:
- Only use fasteners of the proper size and material.
- Replace all corroded fasteners.
- Make sure that all fasteners are properly tightened and that there are no missing fasteners.

Suction-piping checklist

Performance curve reference

Net positive suction head available ($NPSH_A$) must always exceed NPSH required ($NPSH_R$) as shown on the published performance curve of the pump.

Suction-piping checks

Check	Explanation/comment	Checked
Check that the distance between the inlet flange of the pump and the closest elbow is at least five pipe diameters.	This minimizes the risk of cavitation in the suction inlet of the pump due to turbulence. See the Example sections for illustrations.	
Check that elbows in general do not have sharp bends.	See the Example sections for illustrations.	
Check that the suction piping is one or two sizes larger than the suction inlet of the pump. Install an eccentric reducer between the pump inlet and the suction piping.	The suction piping must never have a smaller diameter than the suction inlet of the pump. See the Example sections for illustrations.	
Check that the eccentric reducer at the suction flange of the pump has the following properties: • Sloping side down • Horizontal side at the top	See the example illustrations.	
When suction strainers or suction bells are used, check that they are at least three times the area of the suction piping.	Suction strainers help to prevent clogging. Mesh holes with a minimum diameter of 1/16 in. (1.6 mm) are recommended.	
If more than one pump operates from the same liquid source, check that separate suction-piping lines are used for each pump.	This recommendation helps you to achieve a higher pump performance.	
If necessary, make sure that the suction piping includes a drain valve and that it is correctly installed.	—	

Liquid source below the pump

Check	Explanation/comment	Checked
Make sure that the suction piping is free from air pockets.	This helps to prevent the occurrence of air and cavitation in the pump inlet.	
Check that the suction piping slopes upwards from the liquid source to the pump inlet.	—	
If the pump is not self-priming, check that a device for priming the pump is installed.	Use a foot valve with a diameter that is at least equivalent to the diameter of the suction piping.	

Liquid source above the pump

Check	Explanation/comment	Checked
Check that an isolation valve is installed in the suction piping at a distance of at least two times the pipe diameter from the suction inlet.	This permits you to close the line during pump inspection and maintenance. Do not use the isolation valve to throttle the pump. Throttling can cause these problems: • Loss of priming • Excessive temperatures • Damage to the pump • Voiding the warranty	
Make sure that the suction piping is free from air pockets.	This helps to prevent the occurrence of air and cavitation in the pump inlet.	
Check that the piping is level or slopes downward from the liquid source.	—	
Make sure that no part of the suction piping extends below the suction flange of the pump.	—	
Make sure that the suction piping is adequately submerged below the surface of the liquid source.	This prevents air from entering the pump through a suction vortex.	

Example: Elbow close to the pump suction inlet

Correct	Incorrect
The correct distance between the inlet flange of the pump and the closest elbow must be at least five pipe diameters. 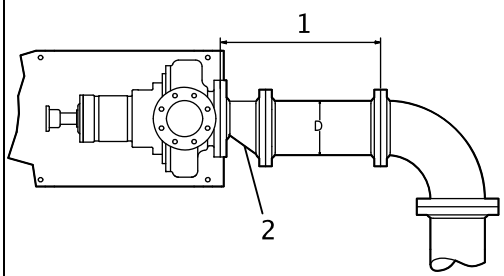 1. Enough distance to prevent cavitation 2. Eccentric reducer with a level top	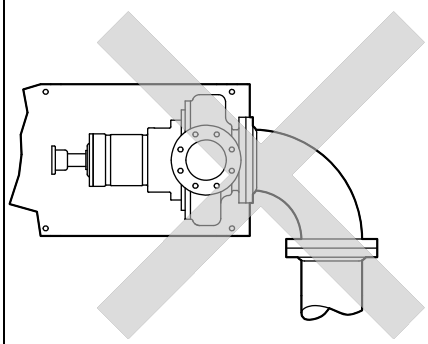

Example: Suction piping equipment

Correct	Incorrect
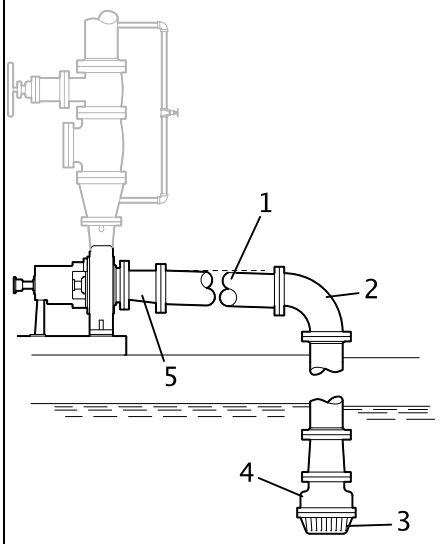	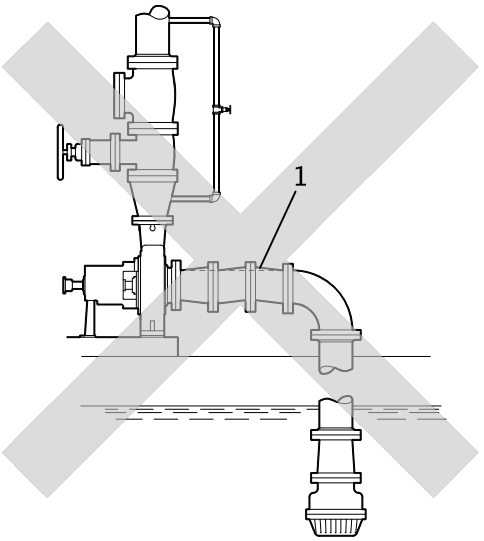
1. Suction pipe sloping upwards from liquid source 2. Long-radius elbow 3. Strainer 4. Foot valve 5. Eccentric reducer with a level top	1. Air pocket, because the eccentric reducer is not used and because the suction piping does not slope gradually upward from the liquid source

Discharge piping checklist

Checklist

Check	Explanation/comment	Checked
Check that an isolation valve is installed in the discharge line.	The isolation valve is required for: • Priming • Regulation of flow • Inspection and maintenance of the pump See Example: Discharge piping equipment for illustrations.	
Check that a check valve is installed in the discharge line, between the isolation valve and the pump discharge outlet.	The location between the isolation valve and the pump allows inspection of the check valve. The check valve prevents damage to the pump and seal due to the back flow through the pump, when the drive unit is shut off. It is also used to restrain the liquid flow. See Example: Discharge piping equipment for illustrations.	
If increasers are used, check that they are installed between the pump and the check valve.	See Example: Discharge piping equipment for illustrations.	
If quick-closing valves are installed in the system, check that cushioning devices are used.	This protects the pump from surges and water hammer.	

Example: Discharge piping equipment

Correct	Incorrect
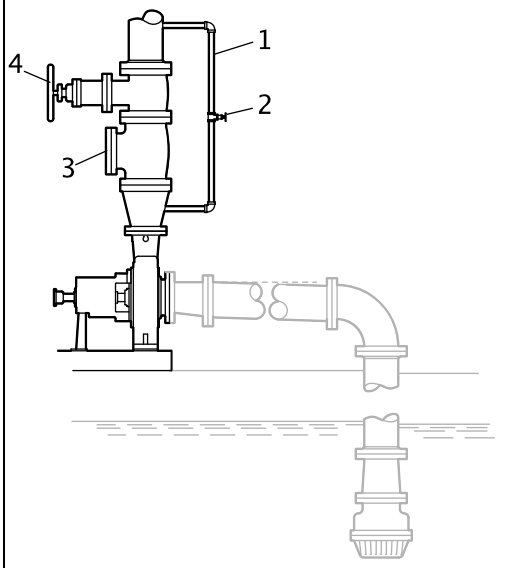	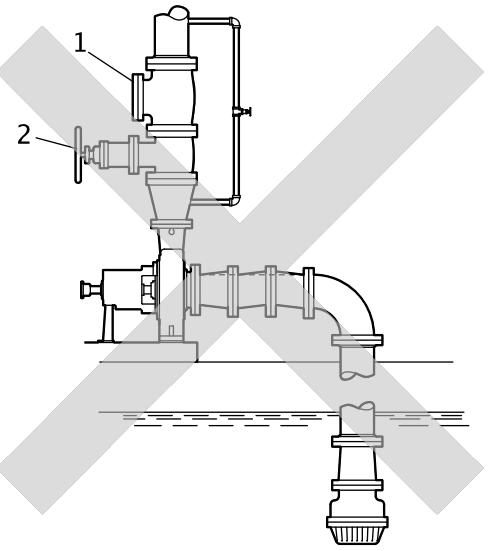
1. Bypass line 2. Shut-off valve 3. Check valve 4. Discharge isolation valve	1. Check valve (incorrect position) 2. The isolation valve should not be positioned between the check valve and the pump.

Commissioning, Startup, Operation, and Shutdown

Preparation for startup

DANGER:
Avoid death or serious injury. Explosion and/or seizure of pump can cause fire and/or burns. Never operate pump past the pressure and temperature limits shown on the nameplate on the pump.

WARNING:

- Failure to follow these precautions before you start the unit will lead to serious personal injury and equipment failure.
- Do not operate the pump below the minimum rated flows or with the suction or discharge valves closed. These conditions can create an explosive hazard due to vaporization of pumped fluid and can quickly lead to pump failure and physical injury.
- Avoid death or serious injury. Leaking fluid can cause fire and/or burns. Operating the pump above maximum rated flow shown on the pump curve leading to an increase in horsepower and vibration along with an increase in NPSHr resulting in mechanical seal and/or shaft failure and/or loss of prime.
- Avoid death or serious injury. Leaking fluid can cause fire and/or burns. Speed of pump must reach 2000 rpm for 2 pole motors and 1000 rpm for 4 pole motors within 10 seconds or an increase in vibration and rotor deflection and decrease in rotor stability leading to mechanical seal and/or shaft failure and/or pump seizure can occur.
- Never operate the pump without the coupling guard correctly installed.
- Always disconnect and lock out power to the driver before you perform any installation or maintenance tasks. Failure to disconnect and lock out driver power will result in serious physical injury.
  - Electrical connections must be made by certified electricians in compliance with all international, national, state, and local rules.
  - Refer to driver/coupling/gear manufacturers installation and operation manuals (IOM) for specific instructions and recommendations.
- Operating the pump in reverse rotation can result in the contact of metal parts, heat generation, and breach of containment.
- Avoid death or serious injury. Explosion and/or seizure of pump can cause fire and/or burns. Assure balance line is installed and either piped to the pump suction or back to the suction vessel to avoid vaporization of pumped fluid.

DANGER:
Avoid death or serious injury. Leaking fluid can cause fire and/or burns. Assure all openings are sealed off prior to filling pump.

Precautions

NOTICE:

- Verify the driver settings before you start any pump.
- Make sure that the warm-up rate does not exceed 2.5°F (1.4°C) per minute.
- Risk of damage to the mechanical seal or shaft sleeve on units supplied with cartridge mechanical seals. Prior to startup, make sure to tighten the set screws in the seal locking ring and remove the centering clips.

You must follow these precautions before you start the pump:

- Flush and clean the system thoroughly to remove dirt or debris in the pipe system in order to prevent premature failure at initial startup.

- Bring variable-speed drivers to the rated speed as quickly as possible.
- Run a new or rebuilt pump at a speed that provides enough flow to flush and cool the close-running surfaces of the stuffing-box bushing.
- If temperatures of the pumped fluid will exceed 200°F (93°C), then warm up the pump prior to operation. Circulate a small amount of fluid through the pump until the casing temperature is within 100°F (38°C) of the fluid temperature. Accomplish this by flowing fluid from pump inlet to discharge drain (optionally, the casing vent can be included in warm-up circuit but not required). Soak for (2) hours at process fluid temperature.

At initial startup, do not adjust the variable-speed drivers or check for speed governor or over-speed trip settings while the variable-speed driver is coupled to the pump. If the settings have not been verified, then uncouple the unit and refer to instructions supplied by the driver manufacturer.

Remove the coupling guard

1. Remove the nut, bolt, and washers from the slotted hole in the center of the coupling guard.
2. Slide the driver half of the coupling guard toward the pump.

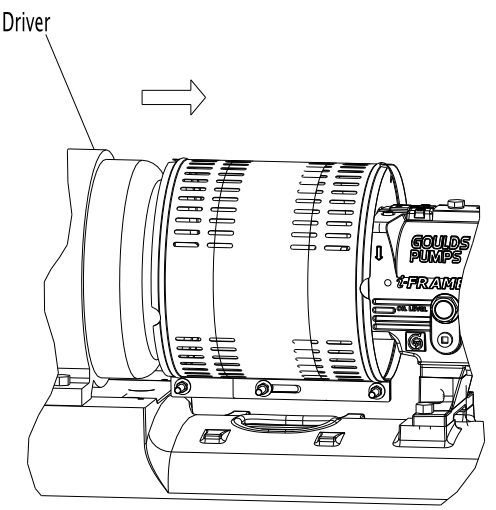

3. Remove the nut, bolt, and washers from the driver half of the coupling guard.

4. Remove the driver-side end plate.

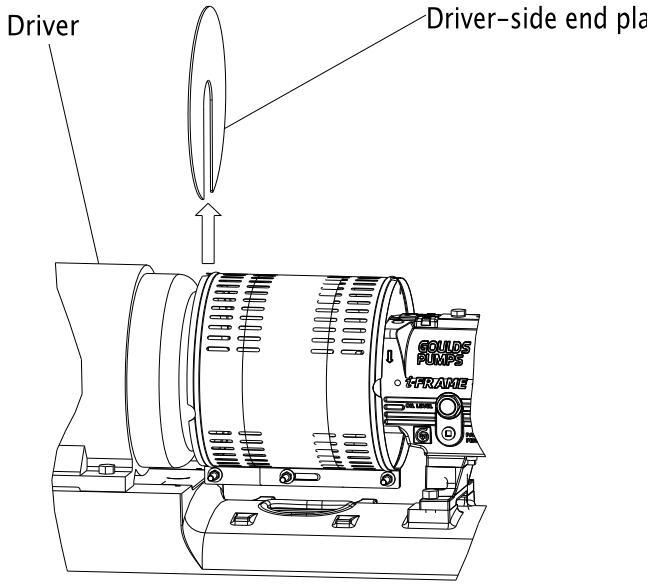

5. Remove the driver half of the coupling guard:
   a) Slightly spread the bottom apart.
   b) Lift upwards.

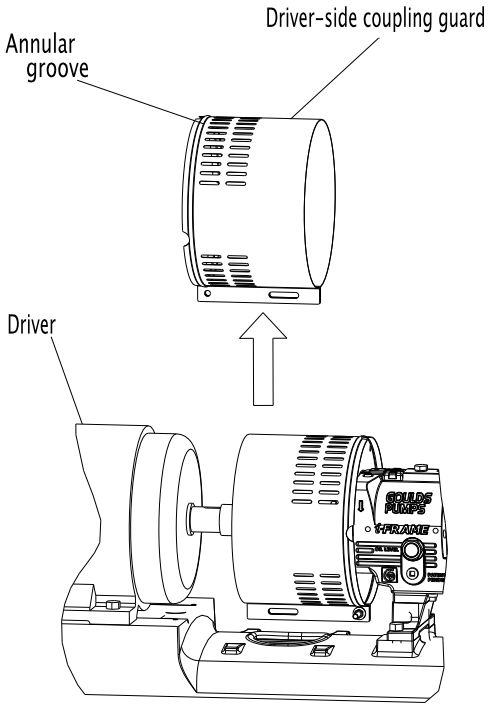

6. Remove the remaining nut, bolt, and washers from the pump half of the coupling guard. It is not necessary to remove the end plate from the pump side of the bearing housing. You can access the bearing-housing tap bolts without removing this end plate if maintenance of internal pump parts is necessary.
7. Remove the pump half of the coupling guard:
   a) Slightly spread the bottom apart.

b) Lift upwards.

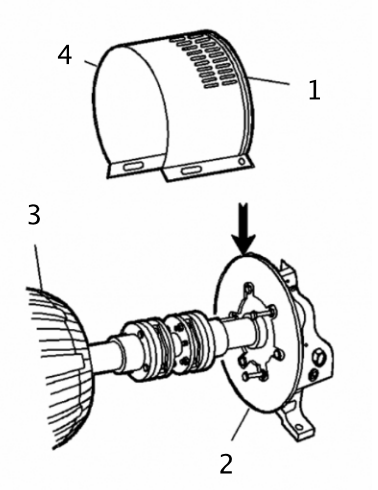

1. Annular groove
2. Pump-side end plate
3. Driver
4. Pump half of the coupling guard

Check the rotation - Frame Mounted

WARNING:

- Operating the pump in reverse rotation can result in the contact of metal parts, heat generation, and breach of containment.
- Always disconnect and lock out power to the driver before you perform any installation or maintenance tasks. Failure to disconnect and lock out driver power will result in serious physical injury.
  - Electrical connections must be made by certified electricians in compliance with all international, national, state, and local rules.
  - Refer to driver/coupling/gear manufacturers installation and operation manuals (IOM) for specific instructions and recommendations.

1. Lock out power to the driver.
2. Make sure that the coupling hubs are fastened securely to the shafts.
3. Make sure that the coupling spacer is removed.
   The pump ships with the coupling spacer removed.
4. Unlock power to the driver.
5. Make sure that everyone is clear, and then jog the driver long enough to determine that the direction of rotation corresponds to the arrow on the bearing housing or close-coupled frame.
6. Lock out power to the driver.

Impeller-clearance check

The impeller-clearance check ensures the following:

- The pump turns freely.
- The pump operates at optimal efficiency for long equipment life and low energy consumption.

Impeller clearances (3196 and HT 3196)

WARNING:
For pumpage temperatures greater than 200°F (93°C), you must increase the cold (ambient) setting according to this table. Doing so prevents the impeller from contacting the casing due to differential expansion from the higher operating temperatures. Failure to do so may result in sparks, unexpected heat generation, and equipment damage.

NOTICE:
Do not set the maximum impeller setting to more than 0.005 in. (0.13 mm) greater than the values in this table. Doing so may result in a significant decrease in performance.

Table 8: Impeller clearances
This pump requires the impeller clearances in the following table.

Service temperature	STi	MTi/LTi	XLT-i/i17
in. (mm)	in. (mm)	in. (mm)	
-20 to 200°F (-29 to 93°C)	0.005 (0.13)	0.008 (0.20)	0.015 (0.38)
Up to 250°F (121°C)	0.006 (0.15)	0.009 (0.22)	0.016 (0.41)
Up to 300°F (149°C)	0.007 (0.18)	0.010 (0.25)	0.017 (0.43)
Up to 350°F (177°C)	0.009 (0.22)	0.012 (0.30)	0.019 (0.48)
Up to 400°F (204°C)	0.010 (0.25)	0.013 (0.33)	0.020 (0.50)
Up to 450°F (232°C)	0.011 (0.28)	0.014 (0.35)	0.021 (0.53)
Up to 500°F (260°C)	0.012 (0.30)	0.015 (0.38)	0.022 (0.56)
Up to 550°F (288°C)	0.013 (0.33)	0.016 (0.41)	0.023 (0.58)
Up to 600°F (316°C)	0.014 (0.36)	0.017 (0.43)	0.024 (0.61)
Up to 650°F (343°C)	0.016 (0.40)	0.019 (0.48)	0.026 (0.66)
Up to 700°F (371°C)	0.017 (0.43)	0.020 (0.50)	0.027 (0.69)

Impeller-clearance setting

Importance of a proper impeller clearance

A proper impeller clearance ensures that the pump runs at high performance.

WARNING:
- The impeller clearance setting procedure must be followed. Improperly setting the clearance or not following any of the proper procedures can result in sparks, unexpected heat generation, and equipment damage.
- If you use a cartridge mechanical seal, you must install the centering clips and loosen the set screws before you set the impeller clearance. Failure to do so could result in sparks, heat generation, and mechanical seal damage.

Impeller clearance methods

You can set the impeller clearance with either of these methods:

- Dial indicator method
- Feeler gauge method

Set the impeller clearance - dial indicator method (all except CV 3196)

WARNING:
Always disconnect and lock out power to the driver before you perform any installation or maintenance tasks. Failure to disconnect and lock out driver power will result in serious physical injury.
- Electrical connections must be made by certified electricians in compliance with all international, national, state, and local rules.
- Refer to driver/coupling/gear manufacturers installation and operation manuals (IOM) for specific instructions and recommendations.

1. Remove the coupling guard.
2. Set the indicator so that the button contacts either the shaft end or the face of the coupling.

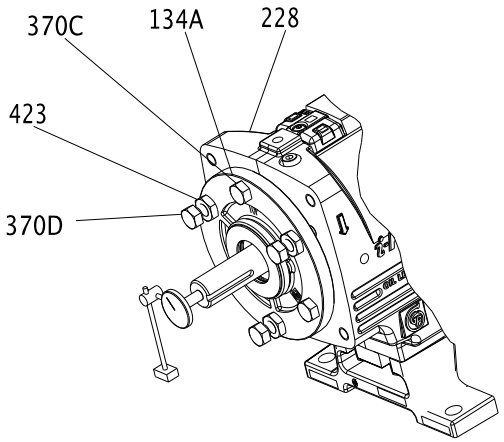

3. Loosen the jam nuts (423) on the jack bolts (370D) , and then back the bolts out about two turns.
4. Tighten the locking bolts evenly (370C), bringing the bearing housing (134A) towards the frame (228) until the impeller contacts the casing.
5. Turn the shaft to ensure that there is contact between the impeller and the casing.
6. Set the indicator to zero and loosen the locking bolt (370C) about one turn.
7. Thread in the jack bolts (370D) until the jack bolts evenly contact the bearing frame.
8. Tighten the jack bolts evenly about one flat at a time, moving the bearing housing (134A) away from the bearing frame until the indicator shows the correct clearance.
   Refer to the impeller clearance table to determine the correct clearance.
9. Tighten the bolts evenly in this order:
   a) Tighten the locking bolts (370C).
   b) Tighten the jack bolts (370D).
   Make sure to keep the indicator reading at the proper setting.
10. Make sure the shaft turns freely.

Set the impeller clearance - feeler gauge method (all except CV 3196)

WARNING:
Always disconnect and lock out power to the driver before you perform any installation or maintenance tasks. Failure to disconnect and lock out driver power will result in serious physical injury.

- Electrical connections must be made by certified electricians in compliance with all international, national, state, and local rules.
- Refer to driver/coupling/gear manufacturers installation and operation manuals (IOM) for specific instructions and recommendations.

1. Lock out the driver power and remove the coupling guard.

2. Loosen the jam nuts (423B) on the jack bolts (371A), and then back the bolts out about two turns.

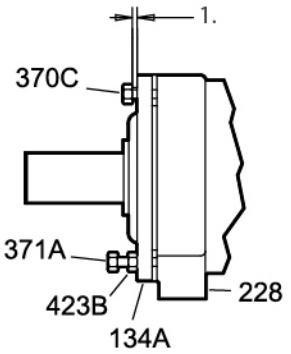

1. See impeller clearance table for distance

3. Evenly tighten the locking bolts (370C), bringing the bearing housing (134A) towards the frame (228) until the impeller contacts the casing.
4. Turn the shaft to ensure that there is contact between the impeller and the casing.
5. Use a feeler gauge to set the gap between the three locking bolts (370C) and the bearing housing (134A) to the correct impeller clearance.
   Refer to the impeller clearance table to determine the correct clearance.
6. Use the three jack bolts (370D) to evenly loosen the bearing housing (134A) until it contacts the locking bolts (370C).
7. Evenly tighten the jam nuts (423B).
8. Make sure the shaft turns freely.

Couple the pump and driver

WARNING:
Always disconnect and lock out power to the driver before you perform any installation or maintenance tasks. Failure to disconnect and lock out driver power will result in serious physical injury.

- Electrical connections must be made by certified electricians in compliance with all international, national, state, and local rules.
- Refer to driver/coupling/gear manufacturers installation and operation manuals (IOM) for specific instructions and recommendations.

Couplings must have proper certification to be used in an ATEX classified environment. Use the instructions from the coupling manufacturer in order to lubricate and install the coupling. Refer to driver/coupling/gear manufacturers IOM for specific instructions and recommendations.

Install the coupling guard

WARNING:

- Never operate a pump without a properly installed coupling guard. Personal injury will occur if you run the pump without a coupling guard.
- Electrical Connections must be made by certified electricians in compliance with all international, national, state, and local rules.
- Refer to driver/coupling/gear manufacturers IOM for specific instructions and recommendations.
- Always disconnect and lock out power to the driver before you perform any installation or maintenance tasks. Failure to disconnect and lock out driver power will result in serious physical injury.
  - Electrical connections must be made by certified electricians in compliance with all international, national, state, and local rules.
  - Refer to driver/coupling/gear manufacturers installation and operation manuals (IOM) for specific instructions and recommendations.
- The coupling used in an Ex-classified environment must be properly certified and must be constructed from a non-sparking material.

Required parts:

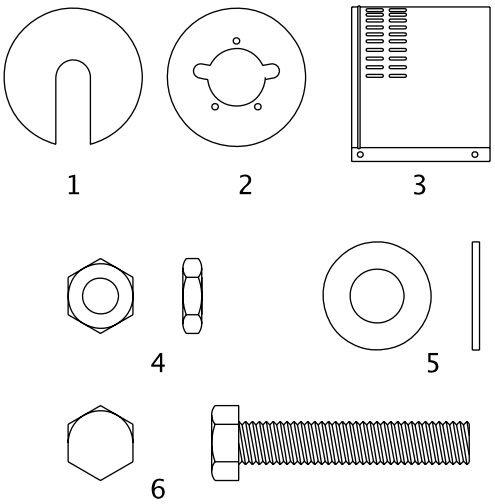

1. End plate, drive end
2. End plate, pump end
3. Guard half, 2 required
4. 3/8-16 nut, 3 required
5. 3/8 in. washer
6. 3/8-16 x 2 in. hex head bolt, 3 required

1. De-energize the motor, place the motor in a locked-out position, and place a caution tag at the starter that indicates the disconnect.
2. Put the pump-side end plate in place.
   If the pump-side end plate is already in place, make any necessary coupling adjustments and then proceed to the next step.

If the pump size is...	Then...
STi, MTi, LTi	Align the pump-side end plate to the bearing frame. You do not need to adjust the impeller.
XLT-i	1. Align the end plate on the pump side to the bearing housing so that you meet these conditions: 1. The large slots on the end plate do not touch the bearing housing tap bolts. 2. The small slots align with the impeller adjusting bolts. 2. Fasten the end plate to the bearing housing using the jam nuts on the impeller adjusting bolts. 3. Check the impeller clearance. Refer to the impeller clearance table for the correct impeller clearance.

If the pump size is...	Then...

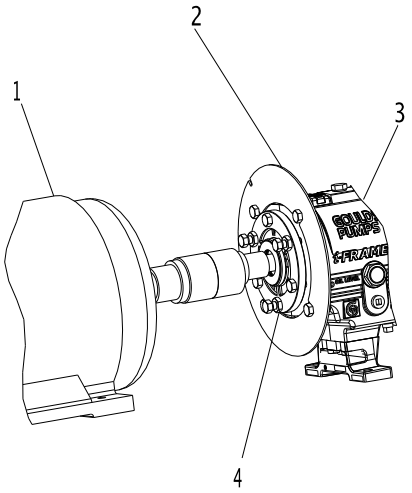

1. Driver
2. Pump end plate
3. Bearing housing
4. Jam nut

3. Put the pump-half of the coupling guard in place:
   a) Slightly spread the bottom apart.
   b) Place the coupling guard half over the pump-side end plate.

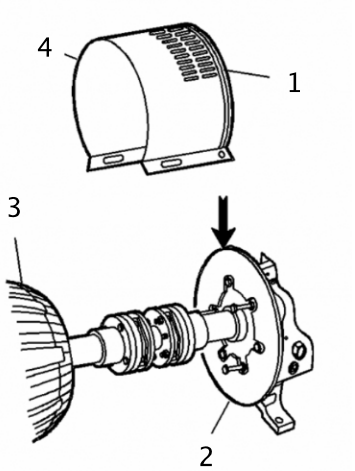

1. Annular groove
2. Pump-side end plate
3. Driver
4. Pump half of the coupling guard

The annular groove in the coupling guard half must fit around the end plate.

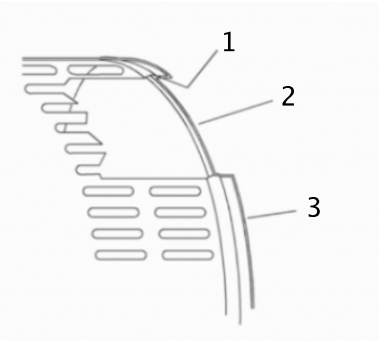

1. Annular groove
2. End plate (pump end)
3. Guard half

4. Use a bolt, a nut, and two washers to secure the coupling guard half to the end plate. Tighten securely.

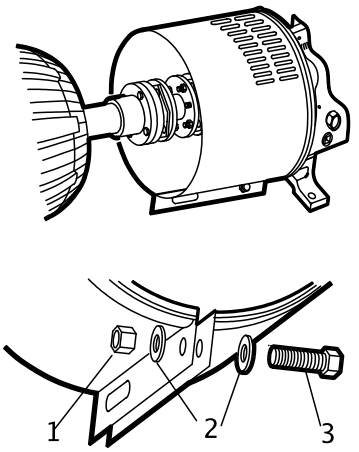

1. Nut
2. Washer
3. Bolt

5. Put the driver half of the coupling guard in place:
   a) Slightly spread the bottom apart.

b) Place the driver half of the coupling guard over the pump half of the coupling guard. The annular groove in the coupling guard half must face the motor.

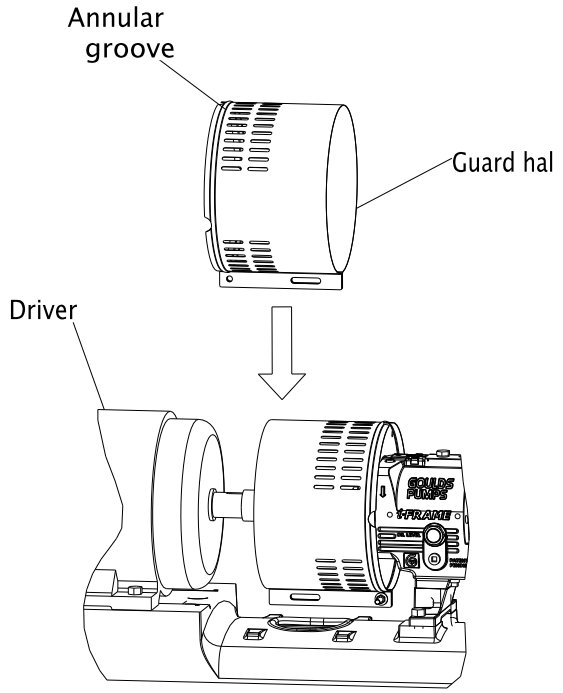

6. Place the driver-side end plate over the motor shaft.

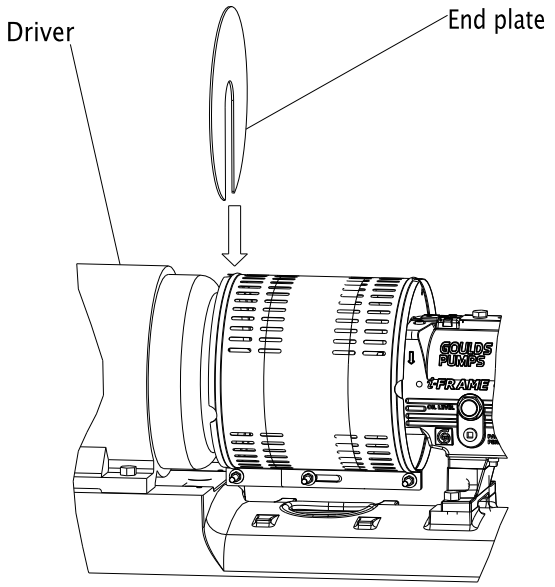

7. Place the driver-side end plate in the annular groove of the driver-half of the coupling guard.
8. Use a bolt, a nut, and two washers to secure the coupling guard half to the end plate. Hand-tighten only.
   The hole is located on the driver-side of the coupling guard half.

9. Slide the driver-half of the coupling guard towards the motor so that the coupling guard completely covers the shafts and coupling.

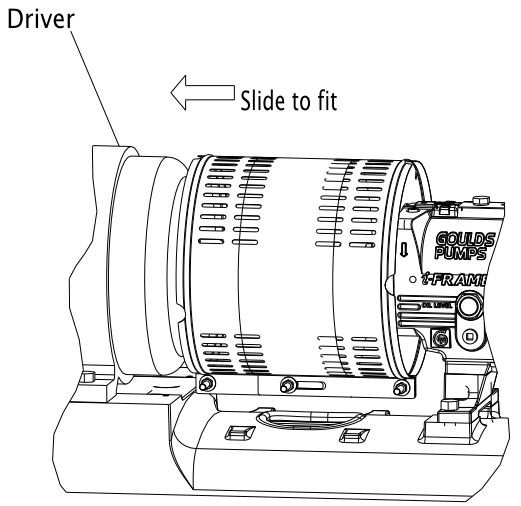

10. Use a nut, a bolt, and two washers to secure the coupling guard halves together.
11. Tighten all nuts on the guard assembly.

WARNING:
Never operate the pump without the coupling guard correctly installed.

Bearing lubrication

WARNING:
Make sure to properly lubricate the bearings. Failure to do so can result in excess heat generation, sparks, and premature failure.

NOTICE: Be certain to check the greasing on a pump that has been out of service for a long period of time and re-grease if necessary.

Pumps are shipped without oil. You must lubricate oil-lubricated bearings at the job site.

Grease-lubricated bearings are lubricated at the factory.

The bearing manufacturer fills greased-for-life bearings with grease and seals them at the factory. You do not need to lubricate or seal these bearings.

Oil volumes

Oil volume requirements

This table shows the required amount of oil for oil-lubricated bearings.

Frame	Qts.	Oz.	ml
STi	0.5	16	400
MTi	1.5	47	1400
LTi	1.5	48	1400
XLT-i and i17	3	96	3000

Lubricating-oil requirements

Oil requirements based on temperature

For the majority of operating conditions, bearing temperatures run between 120°F (49°C) and 180°F (82°C), and you can use an oil of ISO viscosity grade 68 at 100°F (38°C). If temperatures exceed 180°F (82°C), refer to the table for temperature requirements.

Temperature	Oil requirement
Bearing temperatures exceed 180°F (82°C)	Use ISO viscosity grade 100 with bearing-frame cooling or finned-tube oil cooler. The finned-tube oil cooler is standard with the HT 3196 model and optional for all other models.
Pumped-fluid temperatures exceed 350°F (177°C)	Use synthetic lubrication.

Acceptable oil for lubricating bearings

Acceptable lubricants

Examples of acceptable high quality turbine oils with rust and oxidation inhibitors.

Brand	Lubricant type
Chevron	GTS Oil 68
Exxon	Teresstic EP 68
Mobil	DTE 26 300 SSU @ 100°F (38°C)
Philips	Mangus Oil 315
Shell	Tellus Oil 68
Sunoco	Sunvis 968
Royal Purple	SYNFILM ISO VG 68 Synthetic Lube

Examples of acceptable synthetic lubricants.

Brand	Lubricant type
Castrol	Hyspin R&O 220
Chevron	GST 220
Exxon	Teresstic 220
Mobil	DTE Oil BB SHC 630
Shell	Marlina 220 Tellus 220
Sunoco	Sunvis 9220
Texaco	Regal R&O 220 Rando HD 220
Royal Purple	Synfilm GT 220 Synergy 220

Lubricate the bearings with oil

Use a high-quality turbine oil with rust and oxidation inhibitors.

1. Remove the fill plug.
2. Fill the bearing frame with oil through the filler connection, which is located on top of the bearing frame.

Fill the bearing frame with oil until the oil level reaches the middle of the sight glass (319).

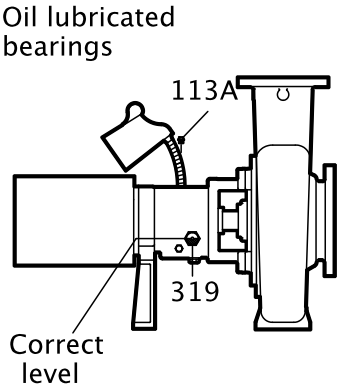

3. Replace the fill plug.

Lubricate the bearings with pure oil mist

Oil mist is an optional feature for this pump.
To lubricate bearings with pure oil mist, follow the instructions provided by the manufacturer of the oil-mist generator.
The inlet connections are on the top of the bearing frame.

Greased-for-life bearing lubrication

The bearing manufacturer fills greased-for-life bearings with grease and seals them at the factory. You do not need to lubricate or seal these bearings. Refer to the Maintenance chapter for re-greasing and maintenance procedures for these bearings.

Shaft-sealing options

In most cases, the manufacturer seals the shaft before shipping the pump. If your pump does not have a sealed shaft, see the Shaft-seal maintenance section in the Maintenance chapter.
This model uses these types of shaft seals:

- Cartridge mechanical seal
- Conventional inside-component mechanical seal
- Conventional outside-component mechanical seal
- Dynamic seal
- Packed-stuffing-box option

Mechanical seal options

Pumps are usually shipped with mechanical seals installed. If they are not, then refer to the mechanical seal manufacturer's installation instructions.
These are the mechanical seal options for this pump:

- Cartridge mechanical seal
- Conventional inside component mechanical seal
- Conventional outside component mechanical seal

Connection of sealing liquid for mechanical seals

Seal lubrication is required

Seal faces must have liquid film between them for proper lubrication. Locate the taps using the illustrations shipped with the seal.

Seal flushing methods

You can use these methods in order to flush or cool the seal:

Method	Description
Product flush	Run the piping so that the pump pushes the pumped fluid from the casing and injects it into the seal gland. If necessary, an external heat exchanger cools the pumped fluid before it enters the seal gland.
External flush	Run the piping so that the pump injects a clean, cool, compatible liquid directly into the seal gland. The pressure of the flushing liquid must be 5 to 15 psi (0.35 to 1.01 kg/cm^2) greater than the seal chamber pressure. The injection rate must be 0.5 to 2 gpm (2 to 8 lpm).
Other	You can use other methods that employ multiple gland or seal chamber connections. Refer to the mechanical seal reference drawing and piping diagrams.

Packed stuffing box option

WARNING:
Packed stuffing boxes are not allowed in an ATEX-classified environment.

The factory does not install the packing, lantern ring, or split gland.

These parts are included with the pump in the box of fittings. Before you start the pump, you must install the packing, lantern ring, and split gland according to the Packed stuffing box maintenance section in the Maintenance chapter.

Connection of sealing liquid for a packed stuffing box

WARNING:
Packed stuffing boxes are not allowed in an ATEX-classified environment.

NOTICE:
Make sure to lubricate the packing. Failure to do so may result in shortening the life of the packing and the pump.

You must use an external sealing liquid under these conditions:

- The pumped fluid includes abrasive particles.
- The stuffing-box pressure is below atmospheric pressure when the pump is running with a suction lift or when the suction source is in a vacuum. Under these conditions, packing is not cooled and lubricated and air is drawn into pump.

Conditions for application of an external liquid

Condition	Action
The stuffing box pressure is above atmospheric pressure and the pumped fluid is clean.	Normal gland leaks of 40 to 60 drops per minute is usually sufficient to lubricate and cool the packing. You do not need sealing liquid.
The stuffing box pressure is below atmospheric pressure or the pumped fluid is not clean.	An outside source of clean compatible liquid is required.
An outside source of clean compatible liquid is required.	You must connect the piping to the lantern ring connection with a 40 to 60 drops-per-minute leak rate. The pressure must be 15 psi (1.01 kg/cm^2) above the stuffing box pressure.

Dynamic-seal option

WARNING:
Dynamic seals are not allowed in an ATEX-classified environment.

The dynamic seal consists of two parts:

- Repeller seal
- Secondary seal (one of the following):
  - Graphite packing
  - Elastomenic face seal

Table 9: Dynamic seal part function

Part	Function
Repeller seal	A repeller seal prevents liquid from entering the stuffing box during operation. The repeller normally does not require a flush. However, for services that allow a build-up of solids on the repeller, you must install a flush connection. If a danger of freezing exists, then you must install a drain connection to drain the repeller chamber.

Secondary seal (graphite packing)	This secondary seal prevents leaks during pump shutdown and is comprised of the following:
	• Graphite packing – Graphite packing provides adequate life running dry but can provide longer performance if lubricated with clean water or grease.
	  • If you lubricate with clean water, then the repeller reduces both the quantity and pressure of seal water that is necessary. If the suction head is less than the repeller capability, then the stuffing box pressure is the same as the atmospheric pressure. Water pressure for the seal must be high enough to overcome static head when the pump is not operating to keep pumped fluid out of the packing. There must be enough flow to cool the packing.
	  • If you lubricate with grease, then you must use spring-loaded grease lubricators to maintain a constant supply.
	• Elastomeric face seal – The elastomeric face seal consists of an elastomer rotary fitted to the shaft and a ceramic stationary seat fitted in the gland. To set an elastomeric face seal, refer to Set an elastomeric face seal. This seal is designed to run dry, so no flush is necessary.

Set an elastomeric face seal

This procedure ensures that the elastomeric seal attains proper contact. No other adjustments are necessary.

1. Remove the gland nuts.
2. Slide the gland back on the sleeve.
3. Pull the rotary back on the sleeve until the rotary is about 1 in. (25 mm) beyond the stuffing box face.
4. Push the gland back onto the studs, pushing the rotary back along the sleeve.
5. Tighten the gland nuts.

Pump priming

Prime the pump with the suction supply above the pump

1. Slowly open the suction isolation valve.
2. Open the air vents on the suction and discharge piping until the pumped fluid flows out.
3. Close the air vents.

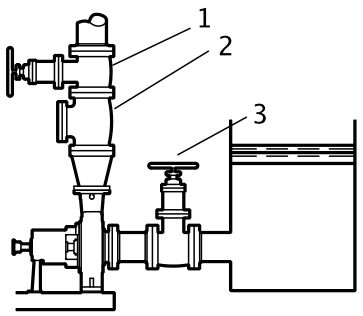

1. Discharge isolation valve
2. Check valve
3. Suction isolation valve

Prime the pump with the suction supply below the pump

Use a foot valve and an outside source of liquid in order to prime the pump. The liquid can come from one of these sources:

- A priming pump
- A pressurized discharge line
- Another outside supply

1. Close the discharge isolation valve.
2. Open the air vent valves in the casing.
3. Open the valve in the outside supply line until only liquid escapes from the vent valves.
4. Close the vent valves.
5. Close the outside supply line.

This illustration is an example of priming the pump with a foot valve and an outside supply:

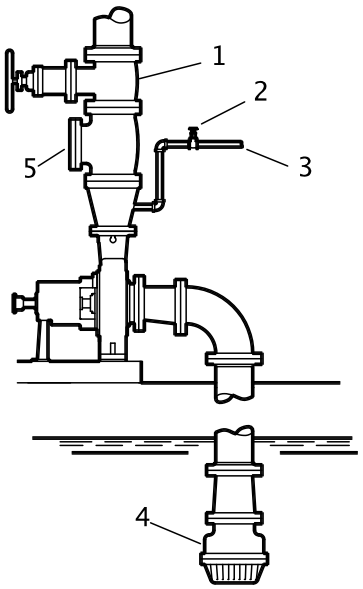

1. Discharge isolation valve
2. Shutoff valve
3. From outside supply
4. Foot valve
5. Check valve

This illustration is an example of priming the pump with a foot valve using a bypass around the check valve:

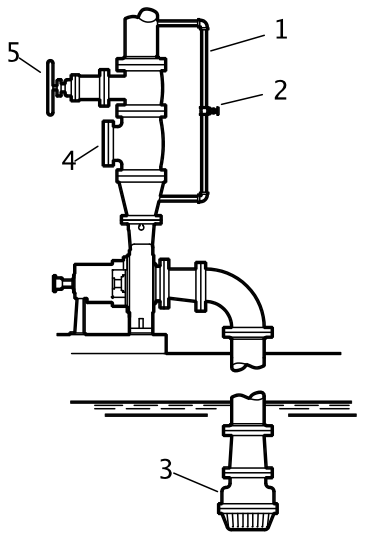

1. By-pass line
2. Shutoff valve
3. Foot valve
4. Check valve
5. Discharge isolation valve

Other methods of priming the pump

You can also use these methods in order to prime the pump:

- Prime by ejector
- Prime by automatic priming pump

Start the pump

WARNING: Immediately observe the pressure gauges. If discharge pressure is not quickly attained, stop the driver immediately, reprime, and attempt to restart the pump.

CAUTION:

- Immediately observe the pressure gauges. If discharge pressure is not quickly attained, stop the driver, reprime, and attempt to restart the pump.
- Observe the pump for vibration levels, bearing temperature, and excessive noise. If normal levels are exceeded, shut down the pump and resolve the issue.
- On pure or purge-oil mist-lubricated units, remove the viewing port plugs to verify that oil mist flowing properly. Replace the plugs.
- On frame mounted units, ensure that the oil level is correct prior to starting pump. Close coupled pumps do not have oil lubricated bearings.
- Ensure all flush and cooling systems are operating correctly prior to starting pump.

Before you start the pump, you must perform these tasks:

- Open the suction valve.
- Open any recirculation or cooling lines.

1. Fully close or partially open the discharge valve, depending on system conditions.
2. Start the driver.
3. Slowly open the discharge valve until the pump reaches the desired flow.
4. Immediately check the pressure gauge to ensure that the pump quickly reaches the correct discharge pressure.
5. If the pump fails to reach the correct pressure, perform these steps:
   a) Stop the driver.
   b) Prime the pump again.
   c) Restart the driver.
6. Monitor the pump while it is operating:
   a) Check the pump for bearing temperature, excessive vibration, and noise.
   b) If the pump exceeds normal levels, then shut down the pump immediately and correct the problem.
   A pump can exceed normal levels for several reasons. See Troubleshooting for information about possible solutions to this problem.
7. Repeat steps 5 and 6 until the pump runs properly.

Activate the i-ALERT Condition Monitor

WARNING:
Never heat the condition monitor to temperatures in excess of 300°F (149°C). Heating to these temperatures could result in death or serious injury.

CAUTION:
Always wear protective gloves. The pump and condition monitor can be hot.

By using the i-Alert™ Condition monitor, you agree to be bound by the Terms and Conditions of the *Software License Agreement* (page 18)

The condition monitor is ready for activation when the pump is running and has reached a steady flow, pressure, and temperature. This process only takes a few minutes.

1. Place a small magnet on the condition monitor over the ITT logo and then remove it, as this example shows.

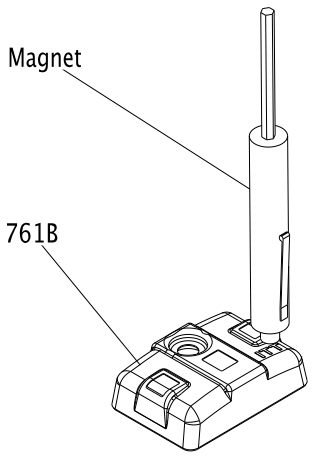

When the condition monitor is activated it:

1. Displays a series of red LEDs followed by a solid green LED.
2. Collects eight samples that are spaced one second apart.
3. Averages these readings to establish the baseline vibration level.
4. Flashes a green LED after approximately twelve seconds.

For the first ten minutes, the green LED flashes every second for five consecutive flashes and then pauses to take a vibration reading. More frequent measurements (every six seconds) are taken in this startup period so that an alarm can be immediately detected.

i-ALERT™ Condition Monitor routine operation

Measurement interval

This table shows the measurement intervals for the condition monitor during normal operation and when the monitor is in alarm mode.

Mode	Measurement interval
Normal operating mode	Five minutes
Alarm mode	Two minutes

When the condition monitor measures a reading beyond the specified temperature and vibration limits, the appropriate red LED flashes. After the process or pump condition that causes the alarm is corrected, the condition monitor returns to normal mode after one normal-level measurement.

Alarm mode

When the condition monitor is in alarm mode, you should investigate the cause of the condition and make necessary corrections in a timely manner.

Magnetic device considerations

Be careful when you use magnetic devices in close proximity of the condition monitor, such as magnetic vibration-monitoring probes or dial indicators. These magnetic devices can accidentally activate or deactivate the condition monitor resulting in improper alarm levels or loss of monitoring.

Pump operation precautions

General considerations

CAUTION:

- Vary the capacity with the regulating valve in the discharge line. Never throttle the flow from the suction side since this can result in decreased performance, unexpected heat generation, and equipment damage.
  Do not overload the driver. Driver overload can result in unexpected heat generation and equipment damage. The driver can overload in these circumstances:
  - The specific gravity of the pumped fluid is greater than expected.
  - The pumped fluid exceeds the rated flow rate.
- Do not operate pump past the maximum flow. For maximum flow refer to the pump performance curve.
- Do not overload the driver. Driver overload can result in unexpected heat generation and equipment damage. The driver can overload in these circumstances:
  - The specific gravity of the pumped fluid is greater than expected.
  - The pumped fluid exceeds the rated flow rate.
- Do not operate pump below hydraulic or thermal minimum flow. For hydraulic minimum flows refer to technical manual and pump performance curve. To calculate thermal minimum flow, refer to HI Centrifugal Pumps for Design and Application ANSI/HI 1.3-2000.
- Make sure to operate the pump at or near the rated conditions. Failure to do so can result in pump damage from cavitation or recirculation.

Operation at reduced capacity

WARNING:
Never operate any pumping system with a blocked suction and discharge. Operation, even for a brief period under these conditions, can cause confined pumped fluid to overheat, which results in a violent explosion. You must take all necessary measures to avoid this condition. If pump becomes plugged shut down and unplug prior to restarting pump.

CAUTION:

- The pump and system must be free of foreign objects. If pump becomes plugged, shut down and unplug prior to restarting pump.
- Avoid excessive vibration levels. Excessive vibration levels can damage the bearings, stuffing box or seal chamber, and the mechanical seal, which can result in decreased performance.
- Avoid increased radial load. Failure to do so can cause stress on the shaft and bearings.
- Avoid heat build-up. Failure to do so can cause rotating parts to score or seize.
- Avoid cavitation. Failure to do so can cause damage to the internal surfaces of the pump.

Operation under freezing conditions

NOTICE:
Do not expose an idle pump to freezing conditions. Drain all liquid that is inside the pump and the cooling coils. Failure to do so can cause liquid to freeze and damage the pump.

Shut down the pump

WARNING:
The pump can handle hazardous and toxic fluids. Identify the contents of the pump and observe proper decontamination procedures in order to eliminate the possible exposure to any hazardous or toxic fluids. Wear the proper personal protective equipment. Potential hazards include, but are not limited to, high temperature, flammable, acidic, caustic, explosive, and other risks. You must handle and dispose of pumped fluid in compliance with the applicable environmental regulations.

1. Slowly close the discharge valve.
2. Shut down and lock the driver to prevent accidental rotation.

Deactivate the i-ALERT™ Condition Monitor

NOTICE:
Always deactivate the condition monitor when the pump is going to be shut down for an extended period of time. Failure to do so will result in reduced battery life.

1. Touch and hold a small magnet to the condition monitor over the ITT logo until the red LEDs blink three times.
   This should take 10-15 seconds if the condition monitor is in normal operating mode and approximately five seconds if the condition monitor is in alarm mode.
2. Remove the magnet.

If the deactivation is successful, solid red LEDs will be displayed.

Reset the i-ALERT™ Condition Monitor

NOTICE:
Always reset the condition monitor when the pump is started after maintenance, system change, or down-time. Failure to do so may result in false baseline levels that could cause the condition monitor to alert in error.

1. Touch a magnet to the condition monitor over the ITT logo to turn the power on.The condition monitor begins to establish a new baseline vibration level.

Make the final alignment of the pump and driver

WARNING:
- Always disconnect and lock out power to the driver before you perform any installation or maintenance tasks. Failure to disconnect and lock out driver power will result in serious physical injury.
  - Electrical connections must be made by certified electricians in compliance with all international, national, state, and local rules.
  - Refer to driver/coupling/gear manufacturers installation and operation manuals (IOM) for specific instructions and recommendations.
- Follow shaft alignment procedures in order to prevent catastrophic failure of drive components or unintended contact of rotating parts. Follow the coupling installation and operation procedures from the coupling manufacturer.

You must check the final alignment after the pump and driver are at operating temperature. For initial alignment instructions, see the Installation chapter.

1. Run the unit under actual operating conditions for enough time to bring the pump, driver, and associated system to operating temperature.
2. Shut down the pump and the driver.
3. Remove the coupling guard.
   See Remove the coupling guard in the Maintenance chapter.
4. Check the alignment while the unit is still hot.
   See Pump-to-driver alignment in the Installation chapter.
5. Reinstall the coupling guard.
6. Restart the pump and driver.

Maintenance

Maintenance schedule

Maintenance inspections

A maintenance schedule includes these types of inspections:

- Routine maintenance
- Routine inspections
- Three-month inspections
- Annual inspections

Shorten the inspection intervals appropriately if the pumped fluid is abrasive or corrosive or if the environment is classified as potentially explosive.

Routine maintenance

Perform these tasks whenever you perform routine maintenance:

- Lubricate the bearings.
- Inspect the seal.

Routine inspections

Perform these tasks whenever you check the pump during routine inspections:

- Check the level and condition of the oil through the sight glass on the bearing frame.
- Check for unusual noise, vibration, and bearing temperatures.
- Check the pump and piping for leaks.
- Analyze the vibration.
- Inspect the discharge pressure.
- Inspect the temperature.
- Check the seal chamber and stuffing box for leaks.
  - Ensure that there are no leaks from the mechanical seal.
  - Adjust or replace the packing in the stuffing box if you notice excessive leaking.

Three-month inspections

Perform these tasks every three months:

- Check that the foundation and the hold-down bolts are tight.
- Check the packing if the pump has been left idle, and replace as required.
- Change the oil every three months (2000 operating hours) at minimum.
  - Change the oil more often if there are adverse atmospheric or other conditions that might contaminate or break down the oil.
- Check the shaft alignment, and realign as required.

Annual inspections

Perform these inspections one time each year:

- Check the pump capacity.
- Check the pump pressure.
- Check the pump power.

If the pump performance does not satisfy your process requirements, and the process requirements have not changed, then perform these steps:

1. Disassemble the pump.
2. Inspect it.

3. Replace worn parts.

Bearing maintenance

These bearing lubrication sections list different temperatures of the pumped fluid. If the pump is ATEX-certified and the temperature of the pumped fluid exceeds the permitted temperature values, then consult your ITT representative.

Bearing lubrication schedule

Type of bearing	First lubrication	Lubrication intervals
Oil-lubricated bearings	Add oil before you install and start the pump. Change the oil after 200 hours for new bearings.	After the first 200 hours, change the oil every 2000 operating hours or every three months.
Grease-lubricated bearings	Grease-lubricated bearings are initially lubricated at the factory.	Regrease bearings every 2000 operating hours or every three months.

Lubricating-oil requirements

Oil requirements based on temperature

For the majority of operating conditions, bearing temperatures run between 120°F (49°C) and 180°F (82°C), and you can use an oil of ISO viscosity grade 68 at 100°F (38°C). If temperatures exceed 180°F (82°C), refer to the table for temperature requirements.

Temperature	Oil requirement
Bearing temperatures exceed 180°F (82°C)	Use ISO viscosity grade 100 with bearing-frame cooling or finned-tube oil cooler. The finned-tube oil cooler is standard with the HT 3196 model and optional for all other models.
Pumped-fluid temperatures exceed 350°F (177°C)	Use synthetic lubrication.

Oil volumes

Oil volume requirements

This table shows the required amount of oil for oil-lubricated bearings.

Frame	Qts.	Oz.	ml
STi	0.5	16	400
MTi	1.5	47	1400
LTi	1.5	48	1400
XLT-i and i17	3	96	3000

Acceptable oil for lubricating bearings

Acceptable lubricants

Examples of acceptable high quality turbine oils with rust and oxidation inhibitors.

Brand	Lubricant type
Chevron	GTS Oil 68
Exxon	Teresstic EP 68
Mobil	DTE 26 300 SSU @ 100°F (38°C)
Philips	Mangus Oil 315
Shell	Tellus Oil 68
Sunoco	Sunvis 968
Royal Purple	SYNFILM ISO VG 68 Synthetic Lube

Examples of acceptable synthetic lubricants.

Brand	Lubricant type
Castrol	Hyspin R&O 220
Chevron	GST 220
Exxon	Teresstic 220

Brand	Lubricant type
Mobil	DTE Oil BB SHC 630
Shell	Marlina 220 Tellus 220
Sunoco	Sunvis 9220
Texaco	Regal R&O 220 Rando HD 220
Royal Purple	Synfilm GT 220 Synergy 220

Regrease the grease-lubricated bearings

NOTICE:
Make sure that the grease container, the greasing device, and the fittings are clean. Failure to do this can result in impurities entering the bearing housing when you regrease the bearings.

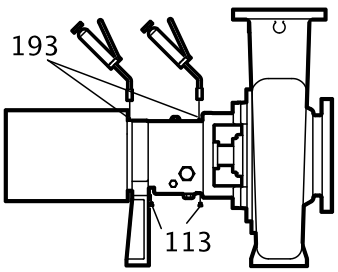

1. Wipe dirt from the grease fittings.
2. Remove the two grease-relief plugs from the bottom of the frame.
3. Fill both of the grease cavities through the fittings with a recommended grease until the fresh grease comes out of the relief holes.
4. Make sure that the frame seals are seated in the bearing housing.
   If they are not, press them in place with the drains located at the bottom.
5. Reinstall the grease-relief plugs.
6. Wipe off any excess grease.
7. Recheck the alignment.

The bearing temperature usually rises after you regrease due to an excess supply of grease. Temperatures return to normal in about two to four operating hours as the pump runs and purges the excess grease from the bearings.

Lubricating-grease requirements

Precautions

NOTICE:

- Never mix greases of different consistencies (NLGI 1 or 3 with NLGI 2) or with different thickeners. For example, never mix a lithium-based grease with a polyurea-based grease. Doing so may result in decreased performance.
- Remove the bearings and old grease if you need to change the grease type or consistency. Failure to do so may result in equipment damage or decreased performance.

Bearing temperature

Bearing temperatures are generally about 20Â°F (18Â°C) greater than bearing-housing outer surface temperatures.
This table shows the type of grease required for the operating temperature of the pump.

Bearing temperature	Type of grease
5°F to 230°F (-15°C to 110°C)	Use a lithium-based mineral-oil grease with a consistency of NLGI 2.
Exceed 350°F (177°C)	Use a high-temperature grease. Mineral-oil greases should have oxidation stabilizers and a consistency of NGLI 3.

Grease recommendations based on temperature

Most pumps use Sunoco 2EP grease. High temperature units that can pump fluids with a temperature greater than 350°F (177°C) use Mobil SCH32.
This table shows which brand of grease to use when lubricating the pump.

Brand	When temperature of pumped fluid is less than 350°F (177°C) âM M NLGI consistency 2	When temperature of pumped fluid is greater than350°F (177°C) âM M NLGI consistency 3
Mobil	Mobilux EP2	SCH32
Exxon	Unirex N2	Unirex N3
Sunoco	Mutipurpose 2EP	N/A
SKF	LGMT 2	LGMT 3

Lubricate the bearings after a shutdown period

1. Flush out the bearings and bearing frame with a light oil to remove contaminants. During flushing, make sure to rotate the shaft slowly by hand.
2. Flush the bearing housing with the proper lubricating oil to ensure oil quality after cleaning.
3. Refer to "Reassembly" section for proper bearing greasing procedure.

Shaft seal maintenance

Mechanical-seal maintenance

WARNING:
The mechanical seal used in an Ex-classified environment must be properly certified. Prior to startup, make sure that all areas that could leak pumped fluid to the work environment are closed.

CAUTION:
Never operate the pump without liquid supplied to mechanical seal. If you run a mechanical seal dry, even for a few seconds, this can cause seal damage. Physical injury can occur if a mechanical seal fails.

Cartridge-type mechanical seals

Cartridge-type mechanical seals are commonly used. Cartridge seals are preset by the seal manufacturer and require no field settings. Cartridge seals installed by the user require disengagement of the holding clips prior to operation, allowing the seal to slide into place. If the seal has been installed in the pump by ITT, these clips have already been disengaged.

Other mechanical seal types

For other types of mechanical seals, refer to the instructions provided by the seal manufacturer for installation and setting.

Reference drawing

The manufacturer supplies a reference drawing with the data package. Keep this drawing for future use when you perform maintenance and seal adjustments. The seal drawing specifies the required flush fluid and attachment points.

Before you start the pump

Check the seal and all flush piping.

Mechanical seal life

The life of a mechanical seal depends on the cleanliness of the pumped fluid. Due to the diversity of operating conditions, it is not possible to give definite indications as to the life of a mechanical seal.

Packed stuffing-box maintenance

WARNING:

- Packed stuffing boxes are not allowed in an ATEX-classified environment.
- Never attempt to replace the packing until the driver is properly locked out and the coupling spacer is removed.

Accepted leakage rate

It is not necessary to shut down or disassemble the pump to inspect the packing operation. During normal operation, the packing should leak approximately one drop per second.

Adjustment of gland

Adjust the gland if the leakage rate is greater than or less than the specified rate.

Evenly adjust each of the two gland bolts with a one-quarter (1/4) turn until the desired leakage rate is obtained. Tighten the bolts to decrease the rate. Loosen the bolts to increase the rate.

Tightening of packing

NOTICE: Never over-tighten packing to the point where less than one drop per second is observed. Over-tightening can cause excessive wear and power consumption during operation.

If you cannot tighten the packing to obtain less than the specified leakage rate, then replace the packing.

Dynamic-seal maintenance

WARNING:
Dynamic seals are not allowed in an ATEX-classified environment.

About the dynamic seal

Dynamic seal parts do not wear substantially to affect operation and do not require maintenance unless the service is particularly abrasive or corrosive.

Repeller

The dynamic repeller prevents pumpage leaks through the stuffing box when the pump operates under published acceptable conditions.

Static seal

A static seal prevents leakage when the pump is shut down. A static seal is either of the following:

- a lip seal
- an elastomeric-face seal
- graphite packing

The only maintenance that the lip seal and the elastomeric-face seal require is replacement when leakage becomes excessive.

The graphite packing should be installed as stuffing-box packing and is designed to run dry.

Disassembly

Disassembly precautions

WARNING:

- This manual clearly identifies accepted methods for disassembling units. These methods must be adhered to. Trapped liquid can rapidly expand and result in a violent explosion and injury. Never apply heat to impellers, propellers, or their retaining devices to aid in their removal unless explicitly stated in this manual.
- Always disconnect and lock out power to the driver before you perform any installation or maintenance tasks. Failure to disconnect and lock out driver power will result in serious physical injury.
  - Electrical connections must be made by certified electricians in compliance with all international, national, state, and local rules.
  - Refer to driver/coupling/gear manufacturers installation and operation manuals (IOM) for specific instructions and recommendations.
- Crush hazard. The unit and the components can be heavy. Use proper lifting methods and wear steel-toed shoes at all times.
- The pump can handle hazardous and toxic fluids. Identify the contents of the pump and observe proper decontamination procedures in order to eliminate the possible exposure to any hazardous or toxic fluids. Wear the proper personal protective equipment. Potential hazards include, but are not limited to, high temperature, flammable, acidic, caustic, explosive, and other risks. You must handle and dispose of pumped fluid in compliance with the applicable environmental regulations.
- A small amount of liquid will be present in certain areas like the seal chamber.

NOTICE:

- Avoid injury. Worn pump components can have sharp edges. Wear appropriate gloves while handling these parts.
- Make sure that all replacement parts are available before you disassemble the pump for overhaul.

Tools required

In order to disassemble the pump, you need these tools:

- Bearing puller
- Brass drift punch
- Cleaning agents and solvents
- Dial indicators
- Feeler gauges
- Hex wrenches
- Hydraulic press
- Induction heater
- Leveling blocks and shims
- Lifting sling
- Micrometer
- Rubber mallet
- Screwdriver
- Snap-ring pliers
- Torque wrench with sockets
- Wrenches

Drain the pump

CAUTION:

- Allow all system and pump components to cool before you handle them to prevent physical injury.
- If your pump is a Model NM3171, NM3196, 3198, 3298, V3298, SP3298, 4150, 4550, or 3107 there is a possible risk of static electric discharge from plastic parts that are not properly grounded. If the pumped fluid is non-conductive, drain and flush the pump with a conductive fluid under conditions that will not allow for a spark to be released to the atmosphere.

1. Close the isolation valves on the suction and discharge sides of the pump.
   You must drain the system if no valves are installed.
2. Open the drain valve.
   Do not proceed until liquid stops coming out of the drain valve. If liquid continues to flow from the drain valve, the isolation valves are not sealing properly and you must repair them before you proceed.
3. Leave the drain valve open and remove the drain plug located on the bottom of the pump housing.
   Do not reinstall the plug or close the drain valve until the reassembly is complete.
4. Drain the liquid from the piping and flush the pump if it is necessary.
5. Disconnect all auxiliary piping and tubing.
6. Remove the coupling guard.

Remove the coupling

1. Disconnect the coupling.
2. Remove the C-face adapter.
3. Remove the coupling-guard pump end-plate.

Remove the back pull-out assembly

CAUTION:
Never remove the back pull-out assembly without assistance.

1. Is your bearing frame oil lubricated?
   - If No: Proceed to step 2.
   - If Yes:
     1. Remove the bearing-frame drain plug (408A) in order to drain oil from the bearing frame.
     2. Replace the plug after the oil is drained.

3. Remove the oil reservoir, if equipped.

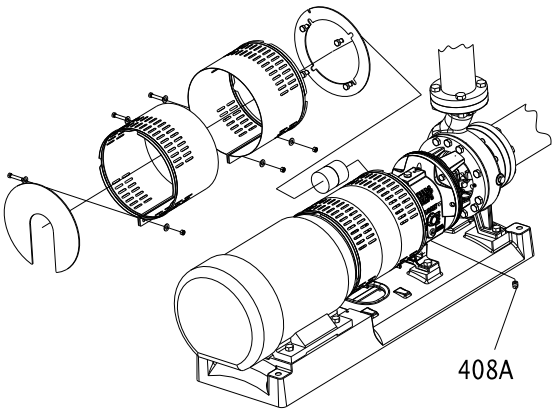

NOTICE:
Oil analysis should be part of a preventive maintenance program that determines the cause of a failure. Save the oil in a clean container for inspection.

2. Does your pump use a C-face adapter?
   - If Yes: Place one sling from the hoist through the frame adapter (108) or frame (228A) for the STi and a second sling from the hoist through the C-face adapter.
   - If No: Place a sling from the hoist through the frame adapter (108) or the frame (228A) for the STi.

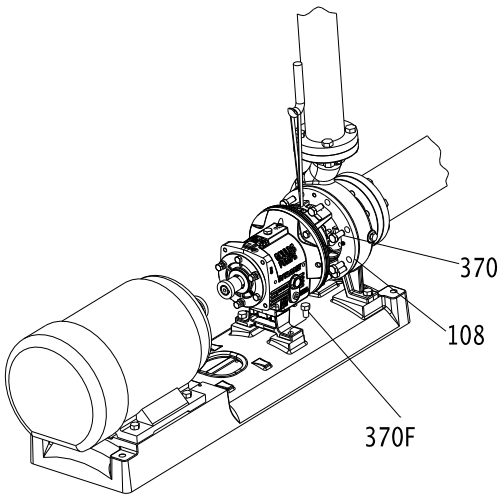

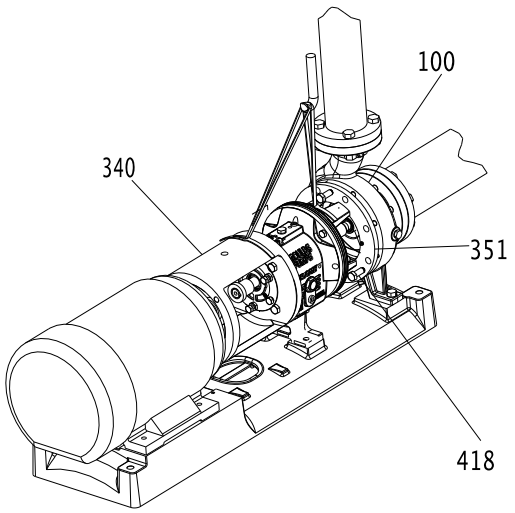

3. Remove the hold-down bolts of the bearing frame foot.
4. Remove the casing bolts.

WARNING:
- Never use heat to disassemble the pump due to the risk of an explosion from trapped liquid.

5. Tighten the jackscrews evenly, using an alternating pattern, in order to remove the back pull-out assembly.
   You can use penetrating oil if the adapter to the casing joint is corroded.
6. Remove the back pull-out assembly from the casing (100).
7. Mark and remove the shims from under the frame foot and save them for reassembly.
8. Remove and discard the casing gasket.
   You will insert a new casing gasket during reassembly.
9. Remove the jackscrews.
10. Clean all gasket surfaces.
    Clean surfaces prevent the casing gasket from partially adhering to the casing due to binders and adhesives in the gasket material.

Remove the coupling hub

1. Clamp the frame adapter securely to the workbench.
2. Remove the coupling hub.
   Mark the shaft for relocation of the coupling hub during reassembly.

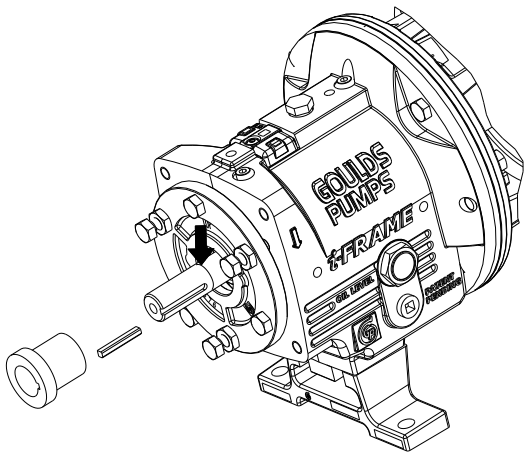

Impeller removal

Remove the impeller (STi, MTi, and LTi)

WARNING:
Never apply heat to remove an impeller. The use of heat may cause an explosion due to trapped liquid, resulting in severe physical injury and property damage.

CAUTION:
Wear heavy work gloves when you handle impellers. The sharp edges can cause physical injury.

1. Slide the shaft wrench (A05107A or A01676A) over the shaft (122) and key.
2. Rotate the impeller (101) clockwise (viewed from the impeller end of the shaft) and raise the wrench off of the work surface.
3. To loosen the impeller, quickly turn it counter-clockwise (viewed from the impeller end of the shaft) while impacting the wrench handle on the workbench or a solid block.

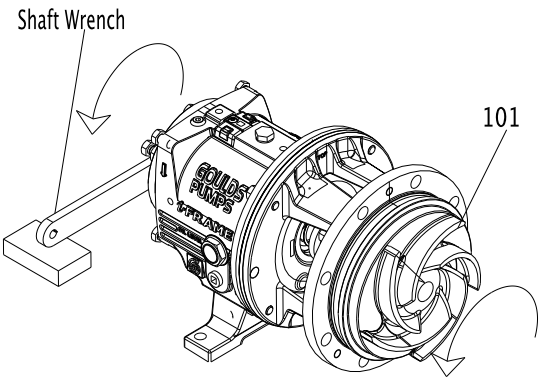

4. Repeat step 3 until the impeller becomes loose.
5. Remove and discard the impeller O-ring (412A). You will insert a new O-ring during reassembly.

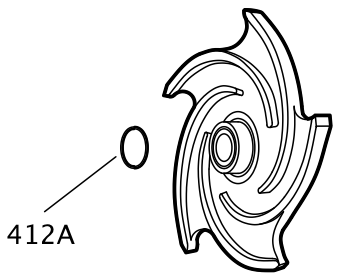

Figure 19: O-ring for models 3196, HT 3196, NM 3196, 3198, and 3796

If the impeller cannot be removed by the previous methods, cut the shaft between the gland and the frame, remove the impeller, stuffing-box cover, gland, sleeve, and shaft end as a unit. Do not apply heat.

Remove the impeller (XLT-i, and i17)

WARNING:
Never apply heat to remove an impeller. The use of heat may cause an explosion due to trapped liquid, resulting in severe physical injury and property damage.

CAUTION:
Wear heavy work gloves when you handle impellers. The sharp edges can cause physical injury.

Clamp the frame foot (241) to the workbench when you use this method to remove the impeller.

1. Remove the impeller plug (458Y) from the front of the impeller (101) and discard the Teflon gasket (428D).

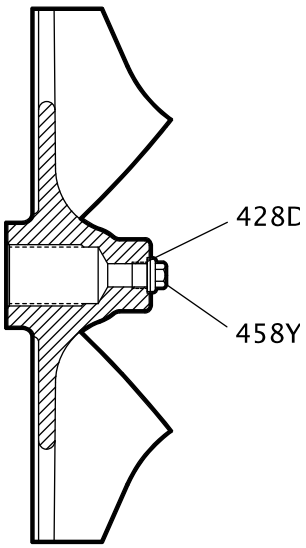

2. Spray penetrating oil through the plug hole into the cavity at the end of the shaft and let it penetrate for 15 minutes.
3. While waiting, rotate the shaft several times to distribute the oil.
4. Slide the shaft wrench (A05107A) over the shaft (122) and key.
5. Rotate the impeller clockwise (viewed from the impeller end of the shaft) and raise the wrench off of the work surface.
6. To loosen the impeller, quickly turn the impeller counter-clockwise (viewed from the impeller end of the shaft) while impacting the wrench handle on the workbench or a solid block.
7. Repeat step 6 until the impeller becomes loose.
8. If step 6 and 7 do not work then do this:
   a) Place a socket wrench over the cast nut on the impeller hub.
   b) Turn the impeller counter-clockwise (viewed from the impeller end of the shaft).

   Be sure that the impeller wrench rests on the workbench or a solid block and that the power end is secure on the work surface.
9. Remove and discard the impeller O-ring (412A).

You will insert a new O-ring during reassembly.

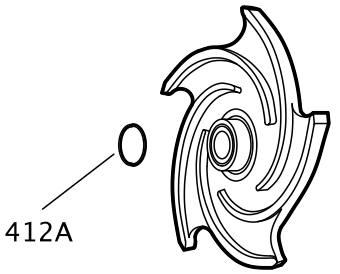

Figure 20: O-ring for models 3196 and HT 3196

If the impeller cannot be removed by the previous methods, cut the shaft between the gland and the frame, remove the impeller, stuffing-box cover, gland, sleeve, and shaft end as a unit. Do not apply heat.

Seal-chamber cover removal

Seal-chamber removal procedures

Choose from one of these procedures to remove the seal-chamber cover.

Table 10: Procedures for seal-chamber cover removal by model

Model	Procedure
3196, CV 3196, HT 3196, LF 3196, 3796	Remove the seal-chamber cover.
NM 3196, 3198	Remove the seal-chamber cover and/or backplate.

Remove the seal-chamber cover (3196, CV 3196, HT 3196, LF 3196, 3796)

1. Remove the gland stud nuts (355).
2. Remove the seal-chamber stud nuts (370H).
3. Remove the seal chamber (184).

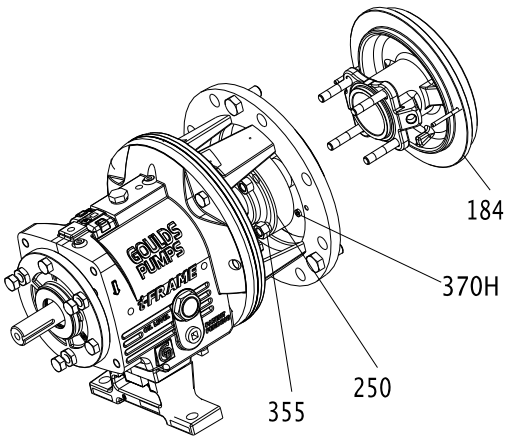

4. Remove the shaft sleeve (126) if it is used.
   The mechanical seal is attached to the sleeve.

NOTICE:
Be careful with the stationary portion of the mechanical seal that is either clamped between the backplate and the gland or seated in the seal-chamber bore. Failure to do so may result in equipment damage.

5. Remove the rotary portion of the seal from the sleeve by loosening the setscrews and sliding it off the sleeve.
   Refer to the mechanical-seal instructions for more information.
6. Remove the gland (250), the stationary portion of the seal, and the O-ring (360Q).

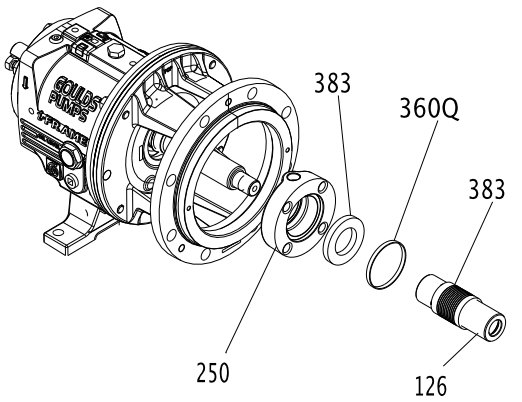

Remove the stuffing-box cover (3196, CV 3196, HT 3196, LF 3196, 3796)

1. Remove the gland nuts (355) and the gland (107).
2. Remove the stuffing-box-cover nuts (370H).
3. Remove the stuffing-box cover (184).

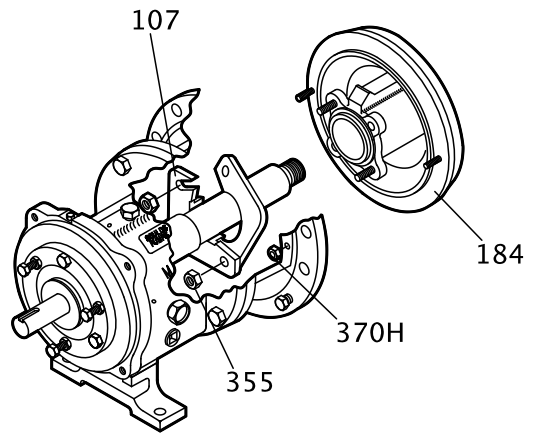

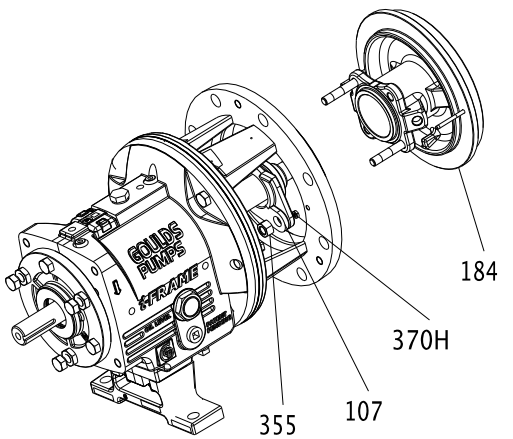

4. Remove the shaft sleeve (126).

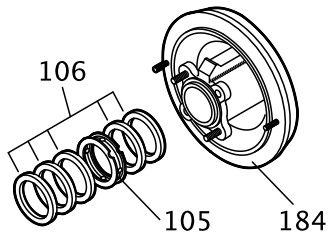

5. Remove the packing (106) and lantern ring (105) from the stuffing-box cover (184). A lantern ring does not come with self-lubricating graphite packing.

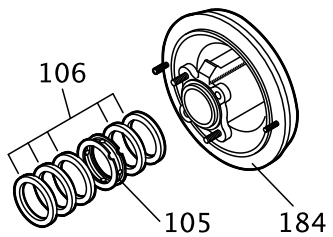

Remove the dynamic seal

1. Remove the stud nuts (370H).
2. Remove the dynamic-seal assembly.

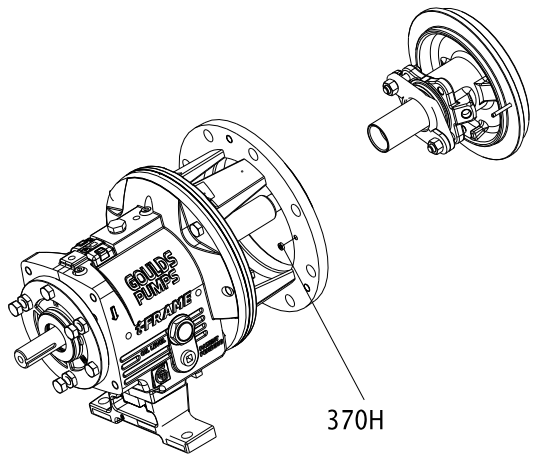

3. Remove the socket head cap screws (265).
4. Remove the packed stuffing box cover (184) and gasket (264).
5. Remove the repeller (262) from the backplate (444).

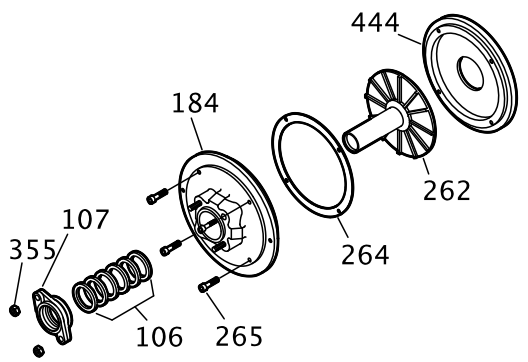

Remove the frame adapter (MTi, LTi, XLT-i, i17)

The 3198 frame adapter is not interchangeable with the adapter of any other model.

1. Remove the dowel pins (469B) and the bolts (370B).
2. Remove the frame adapter (108).
3. Remove and discard the gasket (360D).
   You will install a new gasket during reassembly.

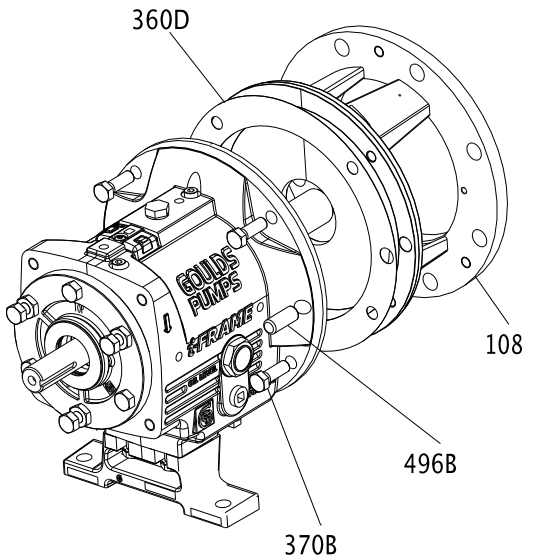

Remove the inboard labyrinth oil seal

Labyrinth oil-seal O-rings are part of the 3196 maintenance kits, and they are sold separately.

1. Determine the fit of your labyrinth oil seal.

Table 11: Labyrinth oil-seal fit

Model	Type of fit
STi	O-ring fit into the bearing-frame adapter (228A)
MTi, LTi, XLT-i and i17	O-ring fit into the frame adapter

2. Remove the O-rings (497H and 497J) and the seal (333A).

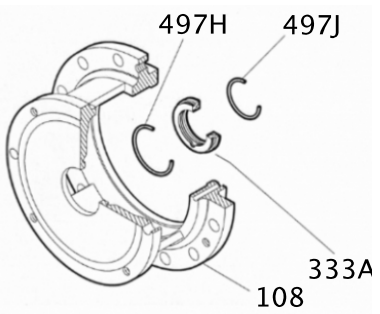

Power-end disassembly

Disassemble the power end (STi, MTi)

1. Remove the clamp screws (370C) and back off the jam nuts (423).
2. Tighten the jack screws (370D) evenly to move the bearing housing (134) out of the bearing frame (228A).

3. Remove the shaft assembly from the bearing frame (228A).

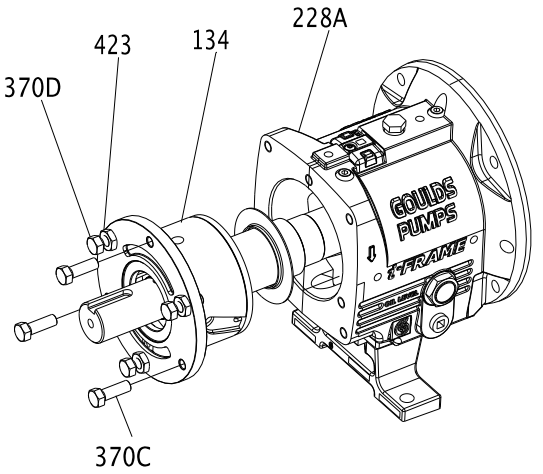

4. Remove the jack screws (370D) with nuts (423).
5. Remove the bearing housing O-ring (496) and the bearings.
6. Remove the outboard bearing retaining snap ring (361A).

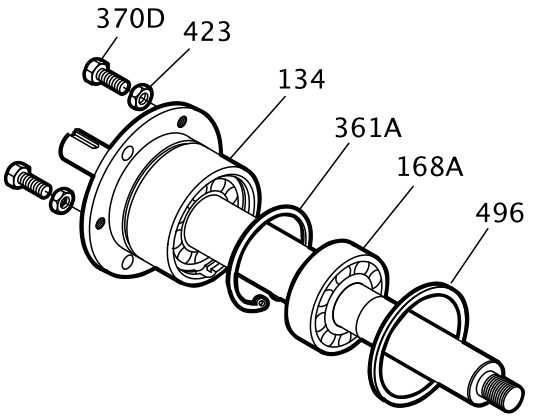

7. Remove the bearing housing (134) and bearings (112A and 168A) from the shaft (122).

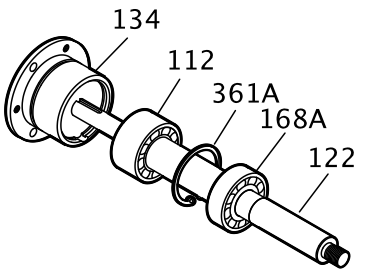

8. Remove the bearing locknut (136) and bearing lock washer (382).
9. Remove the inboard bearing (168A).
10. Remove the outboard bearing (112A).

NOTICE:
Use force only on the inner race when you press bearings off the shaft. Do not use force in situations in which you might break a part. Doing so may result in equipment damage.

NOTICE:
Save the bearings for inspection. Do not reuse the bearings. Doing so may result in decreased performance.

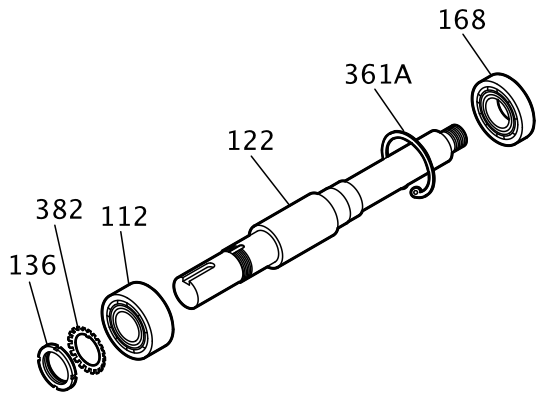

Disassemble the power end (STi and MTi with duplex bearings)

1. Remove the clamp screws (370C) and back off the jam nuts (423).
2. Tighten the jack screws (370D) evenly to move the bearing housing (134) out of the bearing frame (228A).
3. Remove the shaft assembly from the bearing frame (228A).

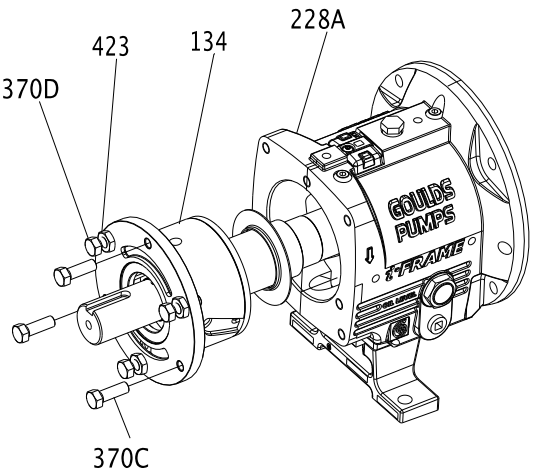

4. Remove the jack screws (370D) with the nuts (423).

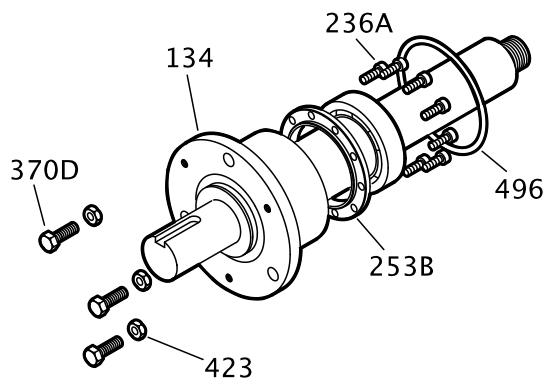

5. Remove the bearing housing O-ring (496).
6. Remove the clamp ring screws (236A) and separate the clamp ring (253B) from the bearing housing (134).
   You must remove the bearings before you can remove the clamp ring from the shaft.
7. Remove the bearing housing (134) and the bearings (112A and 168A) from the shaft (122).

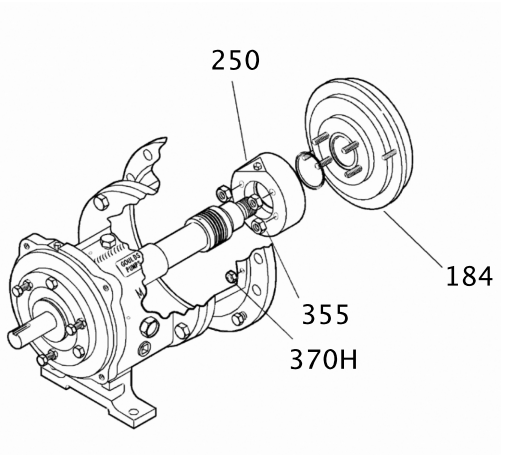

8. Remove the inboard bearing (168A).

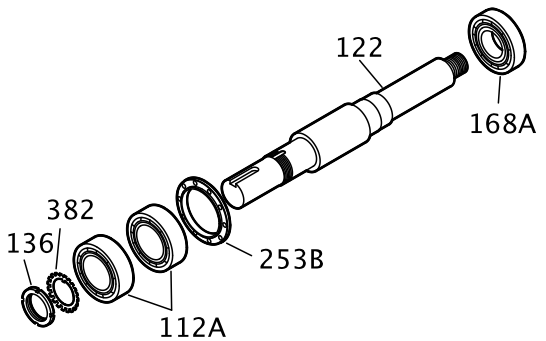

9. Remove the bearing locknut (136) and bearing lockwasher (382).
10. Remove the outboard bearings (112A).

NOTICE:
Use force only on the inner race when you press bearings off the shaft. Do not use force in situations in which you might break a part. Doing so may result in equipment damage.

NOTICE:
Save the bearings for inspection. Do not reuse the bearings. Doing so may result in decreased performance.

11. Remove the outboard labyrinth oil seal (332A) from the bearing housing (134).

Remove the O-rings (497F and 497G) if it is necessary. Labyrinth oil seal O-rings are part of the 3196 maintenance kits and they are sold separately.

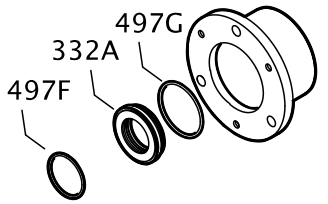

Disassemble the power end (LTi)

1. Remove the clamp screws (370C) and back off the jam nuts (423).
2. Evenly tighten the jack screws (370D) to move the bearing housing (134) out of the bearing frame (228A).
3. Remove the shaft assembly from the bearing frame (228A).

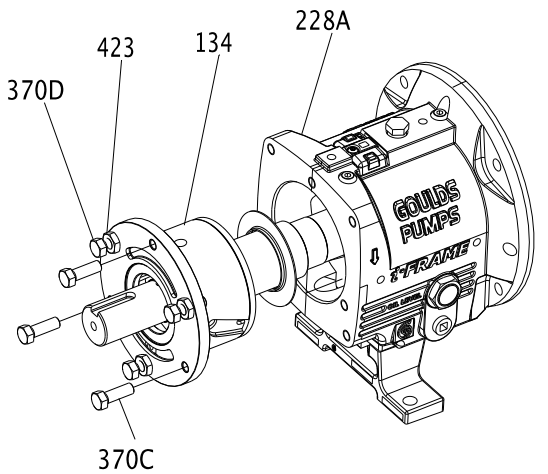

4. Remove the jack screws (370D) with the nuts (423).
5. Remove the clamp-ring screws (236A) and separate the clamp ring (253B) from the bearing housing (134).
   You must remove the bearings before you can remove the clamp ring from the shaft.

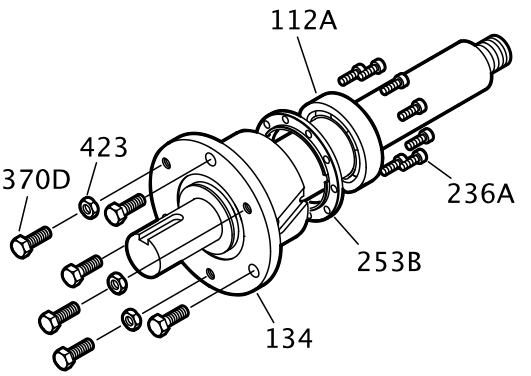

6. Remove the bearing housing (134) and the bearings (112A and 168A) from the shaft (122).

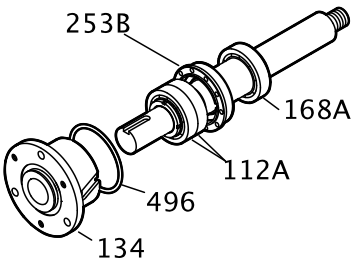

7. Remove the bearing housing O-ring (496) and the inboard bearing (168A).

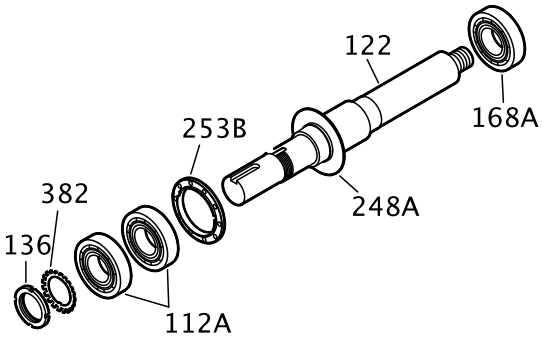

8. Remove the bearing locknut (136) and the bearing lockwasher (382).
9. Remove the outboard bearings (112A) and the clamp ring (253B).

NOTICE:
Do not remove the oil flinger unless it is damaged. Doing so may result in unnecessary shutdown time or equipment damage.

NOTICE:
Use force only on the inner race when you press bearings off the shaft. Do not use force in situations in which you might break a part. Doing so may result in equipment damage.

NOTICE:
Save the bearings for inspection. Do not reuse the bearings. Doing so may result in decreased performance.

10. Remove the outboard labyrinth oil seal (332A) from the bearing housing (134).
11. Remove the O-rings (497F and 497G) if it is necessary.

Labyrinth oil-seal O-rings are part of the 3196 maintenance kits, and they are sold separately.

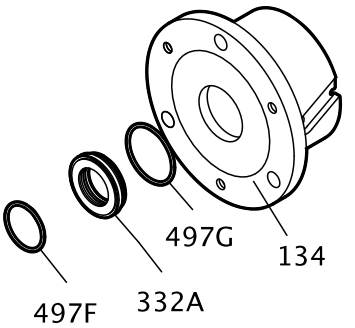

Disassemble the power end (XLT-i and i17)

1. Remove the bearing frame from the frame foot (241) using the frame-foot bolts (370F).

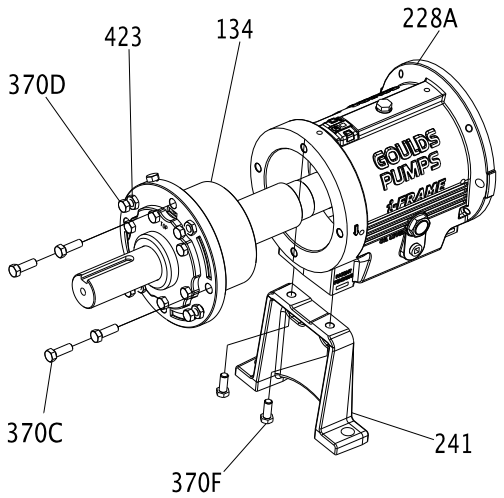

2. Remove the clamp screws (370C) and back off the jam nuts (423).
3. Tighten the jack screws (370D) evenly to move the bearing housing (134) out of the bearing frame (228A).
4. Remove the shaft assembly from the bearing frame (228A).
5. Remove the jack screws (370D), the nuts (423), and the bearing housing O-ring.
6. Remove the inboard bearing (168A).

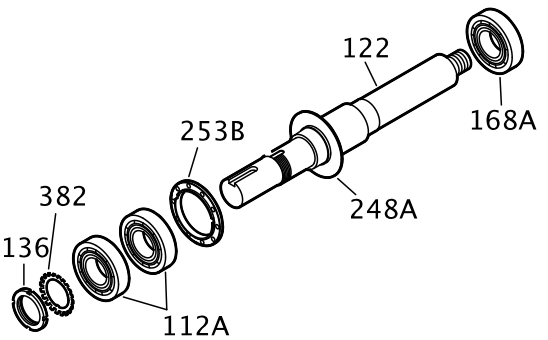

7. Remove the bolts (371C), the bearing end cover (109A), and the gasket (360C).
8. Remove the outboard labyrinth oil seal (332A) from the end cover (109A).

9. Remove the O-rings (497F and 497G) if it is necessary.
   Labyrinth oil-seal O-rings are part of the 3196 maintenance kits, and they are sold separately.

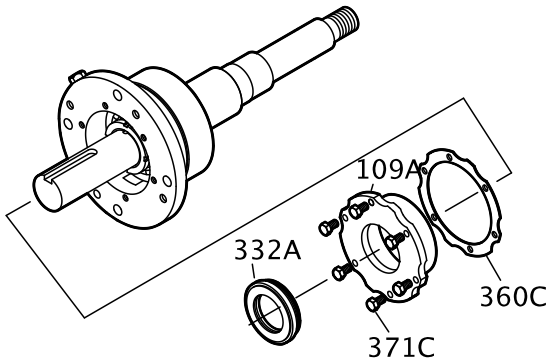

10. Remove the bearing housing (134) and the bearing (112A) from the shaft (122).

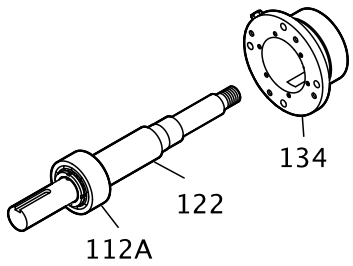

11. Remove the bearing locknut (136), the bearing lockwasher (382), and the outboard bearing (112A).

NOTICE:
Use force only on the inner race when you press bearings off the shaft. Do not use force in situations in which you might break a part. Doing so may result in equipment damage.

NOTICE:
Save the bearings for inspection. Do not reuse the bearings. Doing so may result in decreased performance.

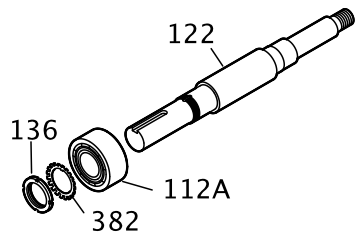

Disassemble the power end (XLT-i and i17 with duplex bearings)

1. Remove the bearing frame to frame foot (241) using the frame-foot bolts (370F).

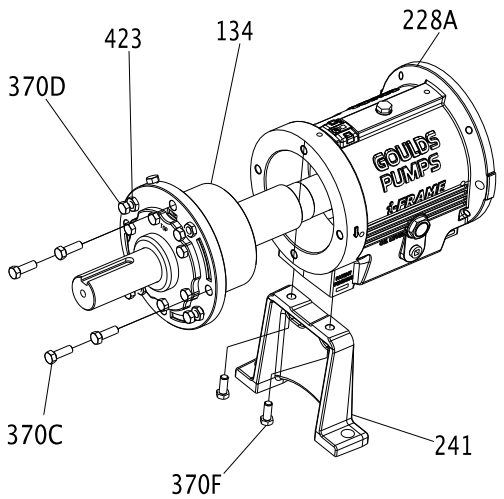

2. Remove the clamp screws (370C) and back off the jam nuts (423).
3. Tighten the jack screws (370D) evenly to move the bearing housing (134) out of the bearing frame (228A).
4. Remove the shaft assembly from the bearing frame (228A).
5. Remove the jack screws (370D) and the nuts (423).
6. Remove the bearing housing O-ring (496) and the inboard bearing (168A).

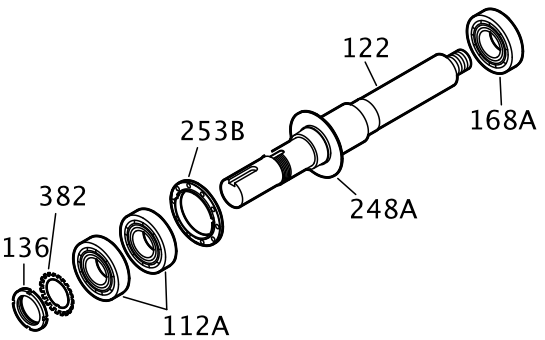

7. Remove the bolts (371C), the end cover (109A), and the gasket (360C).
8. If necessary, remove the outboard labyrinth oil seal (332A) from the end cover (109A) and remove the O-rings (497F and 497G).

Labyrinth oil-seal O-rings are part of the 3196 maintenance kits, or they are sold separately.

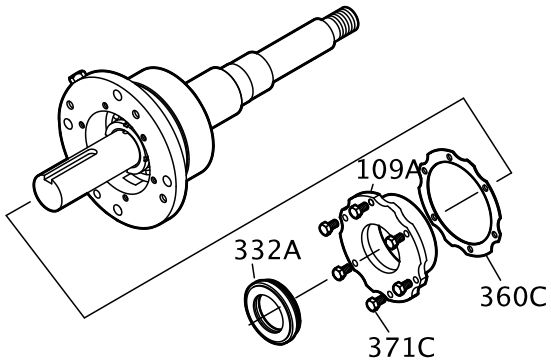

9. Remove the bearing housing (134) and bearings (112A) from the shaft (122) .

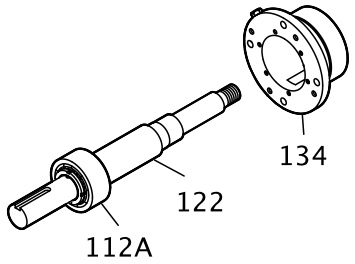

10. Remove the bearing locknut (136), the bearing lockwasher (382), and the outboard bearing (112A).

NOTICE:
Use force only on the inner race when you press bearings off the shaft. Do not use force in situations in which you might break a part. Doing so may result in equipment damage.

NOTICE:
Save the bearings for inspection. Do not reuse the bearings. Doing so may result in decreased performance.

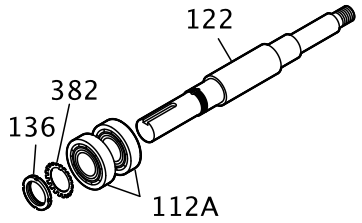

Disassemble the bearing frame

1. Remove these plugs from the bearing frame (228A).
   - oil-fill plug (113A)
   - oil-drain plug (408A)
   - sight-oiler plug (408J)
   - four oil mist/grease connection plugs (408H)
   - oil-cooler inlet and outlet plugs (408L and 408M) or oil cooler

2. For the MTi and LTi models, remove the bearing frame foot-to-frame bolts (370F) and the frame foot (241).

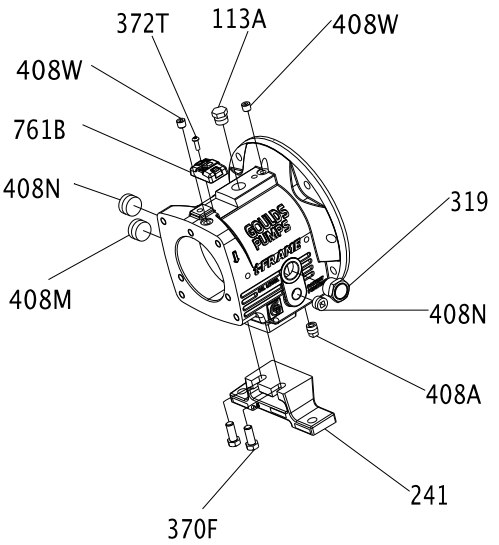

Guidelines for i-ALERT™ Condition Monitor disposal

Precautions

WARNING:
- Never heat the condition monitor to temperatures in excess of 300°F (149°C). Heating to these temperatures could result in death or serious injury.
- Never dispose of the condition monitor in a fire. This could result in death or serious injury.

Guidelines

The battery contained in the condition monitor does not contain enough lithium to qualify as reactive hazardous waste. Use these guidelines when disposing of the condition monitor.

- The condition monitor is safe for disposal in the normal municipal waste stream.
- Adhere to local laws when you dispose of the condition monitor.

Disassemble the C-face adapter

NOTICE:
You must properly support the motor with a clean, uncorroded eye bolt or a strap under both end bells. Failure to do so may result in equipment damage.

1. Loosen the motor-mounting bolts and remove the motor.

Table 12: Required number of motor-mounting bolts
This table shows the number of motor-mounting bolts.

Pump frame	Motor frame	Number of bolts
STi	All	4
MTi and LTi	143-286	4
	324-365	8

2. Loosen the bolts attached to the bearing-frame flange and remove the C-face adapter from the bearing frame.

Pre-assembly inspections

Guidelines

Before you assemble the pump parts, make sure you follow these guidelines:

- Inspect the pump parts according to the information in these pre-assembly topics before you reassemble your pump. Replace any part that does not meet the required criteria.
- Make sure that the parts are clean. Clean the pump parts in solvent in order to remove oil, grease, and dirt.

NOTICE:
Protect machined surfaces while you clean the parts. Failure to do so may result in equipment damage.

Replacement guidelines

Casing check and replacement

WARNING:
Avoid death or serious injury. Leaking fluid can cause fire and/or burns. Inspect and assure gasket sealing surfaces are not damaged and repair or replace as necessary.

Inspect the casing for cracks and excessive wear or pitting. Thoroughly clean gasket surfaces and alignment fits in order to remove rust and debris.

Repair or replace the casing if you notice any of these conditions:

- Localized wear or grooving that is greater than 1/8 in. (3.2 mm) deep
- Pitting that is greater than 1/8 in. (3.2 mm) deep
- Irregularities in the casing-gasket seat surface

Casing areas to inspect

The arrows point to the areas to inspect for wear on the casing:

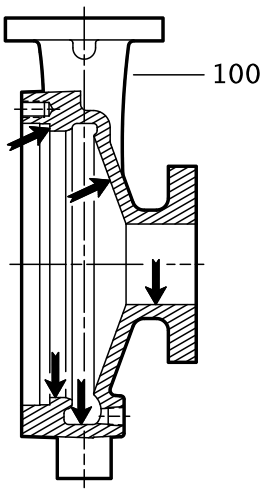

Figure 21: 3196, HT 3196, LF 3196, NM 3196, and 3198 casing

Impeller replacement

This table shows the criteria for replacing the impeller:

Impeller parts	When to replace
Impeller vanes	• When grooved deeper than 1/16 in. (1.6 mm), or • When worn evenly more than 1/32 in. (0.8 mm)
Pumpout vanes	When worn or bent more than 1/32 in. (0.8 mm)
Vane edges	When you see cracks, pitting, or corrosion damage

Impeller areas to inspect

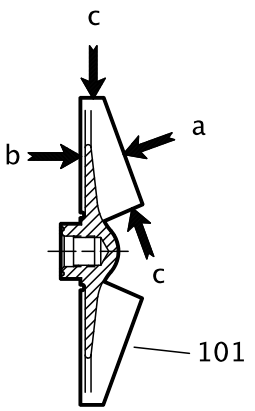

Figure 22: Areas to inspect for wear on the 3196 impeller.

Frame adapter check and replacement

- Replace the frame adapter if it has cracks or excessive corrosion damage.
- Make sure the gasket surface is clean.

Dynamic-seal repeller replacement

This table shows the criteria for replacing dynamic-seal repeller parts for the 3196, CV 3196, and LF 3196 pump models.

Dynamic seal part	When to replace
Dynamic-seal repeller vane	The grooves are deeper than 1/16 in. (1.6 mm) or are worn evenly more than 1/32 in. (0.8 mm).
Sleeve surface	The surface has grooves, pitting, or other damage.

Labyrinth seal replacement

Replace the labyrinth-seal O-ring if it has cuts and cracks.

Gaskets, O-rings, and seats replacement

WARNING:
Avoid death or serious injury. Leaking fluid can cause fire and/or burns. Replace any damaged or worn gaskets/o-rings.

- Replace all gaskets and O-rings at each overhaul and disassembly.
- Inspect the seats. They must be smooth and free of physical defects.
  In order to repair worn seats, skin cut them in a lathe while you maintain dimensional relationships with other surfaces.
- Replace parts if the seats are defective.

Shaft and sleeve replacement guidelines

Two types of sleeves

The 3198 is offered with either a metallic sleeve that uses the standard 3196 shaft or a Teflon sleeve. The Teflon sleeve requires a special shaft and a different inboard labyrinth oil seal.

Shaft measurements check

Replace the shaft (122) if any measurements exceed acceptable values. See Bearing fits and tolerances.

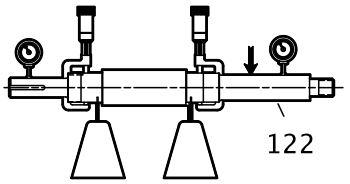

Straightness check

Replace the shaft (122) if runout exceeds the values in this table:

Table 13: Shaft runout tolerances for sleeve fit and coupling fit

	Sleeve fit in inches (millimeters)	Coupling fit in inches (millimeters)
With sleeve	0.001 (0.025)	0.001 (0.025)
Without sleeve	0.002 (0.051)	0.001 (0.025)

Shaft and sleeve check

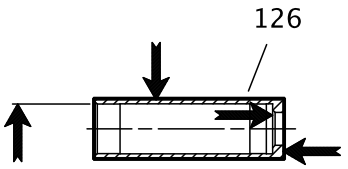

- Check the shaft and sleeve (126) surface for grooves and pitting.
- Replace the shaft and sleeve if any grooves or pits are found.

Bearing-frame inspection

Checklist

Check the bearing frame for these conditions:

- Visually inspect the bearing frame and frame foot for cracks.
- Check the inside surfaces of the frame for rust, scale, or debris. Remove all loose and foreign material.
- Make sure that all lubrication passages are clear.
- If the frame has been exposed to pumped fluid, inspect the frame for corrosion or pitting.
- Inspect the inboard-bearing bores.
  If any bores are outside the measurements in the Bearing fits and tolerances table, replace the bearing frame.

Surface inspection locations

This figure shows the areas to inspect for wear on the bearing frame outside surface.

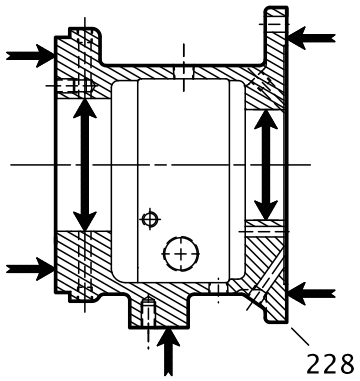

Figure 23: Outside surface inspection locations

This figure shows the areas to inspect for wear on the bearing frame inside surface.

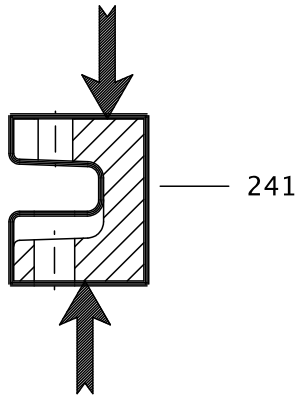

Figure 24: Inside surface inspection locations

C-face adapter inspection

Checklist

- Visually inspect the C-face adapter (340) for cracks.
- Check all surfaces for rust, scale, or debris and remove all loose and foreign material.
- Check for corrosion or pitting.

This figure shows the areas to inspect for cracks on the C-face adapter.

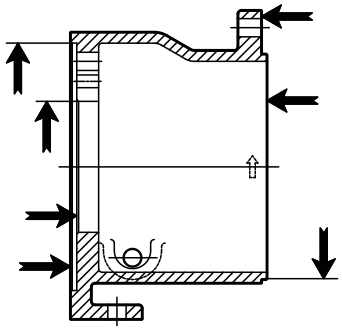

Figure 25: C-face adapter inspection locations

Seal chamber and stuffing box cover inspection

Checklist

Perform these checks when you inspect the seal chamber and stuffing box cover:

- Make sure that these surfaces are clean:
  - Seal chamber and stuffing box cover
  - Dynamic-seal backplate gasket
  - Mounting
- Make sure there is no pitting or wear greater than 1/8 in. (3.2 mm) deep. Replace the seal chamber and stuffing box cover if pitting or wear exceeds this measurement.
- Inspect the machined surfaces and mating faces noted in the figures.

These images point to the areas to inspect:

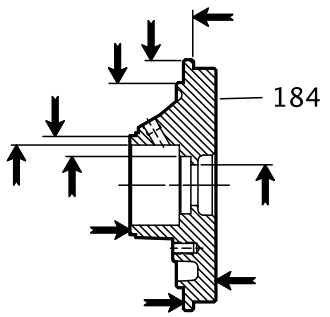

Figure 26: BigBore™ chamber

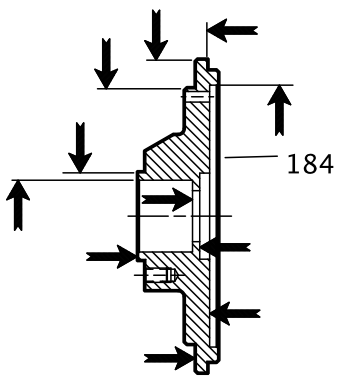

Figure 27: Stuffing box cover

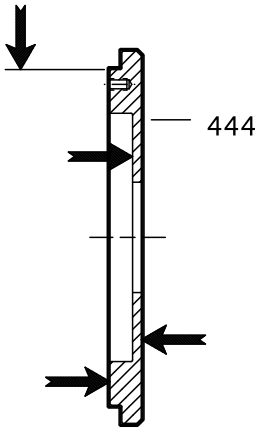

Figure 28: Dynamic-seal backplate

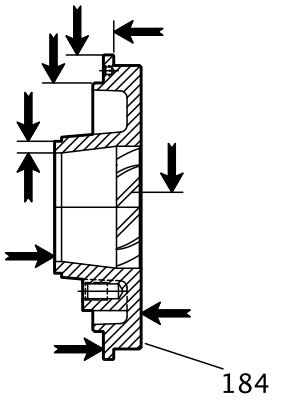

Figure 29: TaperBore™ Plus

Bearings inspection

Condition of bearings

Do not reuse bearings. The condition of the bearings provides useful information on operating conditions in the bearing frame.

Checklist

Perform these checks when you inspect the bearings:

- Inspect the bearings for contamination and damage.
- Note any lubricant condition and residue.
- Inspect the ball bearings to see if they are loose, rough, or noisy when you rotate them.
- Investigate any bearing damage to determine the cause. If the cause is not normal wear, correct the issue before you return the pump to service.

Bearing-housing inspection

Checklist

- Inspect the bearing-housing (134) bore according to the bearing fits and tolerances table.

- Replace the bearing housing if the dimensions exceed acceptable values. Reference: see Bearings fits and tolerances.
- Visually inspect the bearing housing for cracks and pits.

Checklist for specific models

This table shows bearing-housing checks that are required for specific models of pump.

Frame	Bearing-housing check
STi and MTi	Ensure that the snap-ring groove is not cracked.
LTi	Clear all grooves and holes.
XLT-i and i17	Clean the gasket surface.

Inspection locations

The following images point to the areas to inspect on the bearing housing.

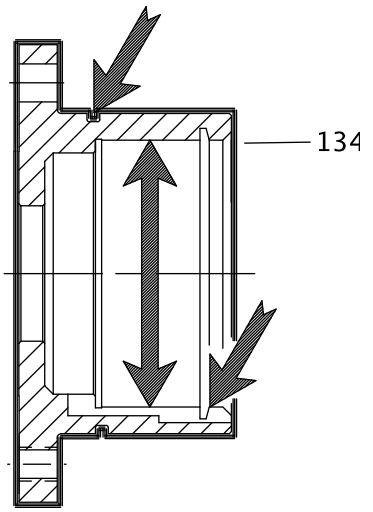

Figure 30: STi and MTi bearing housing

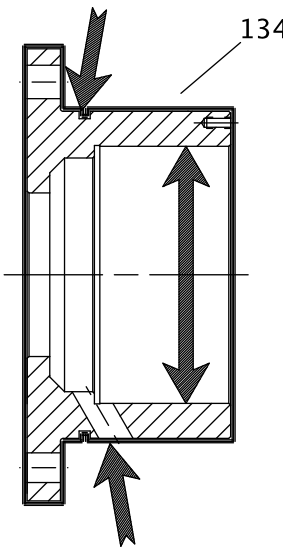

Figure 31: LTi bearing housing

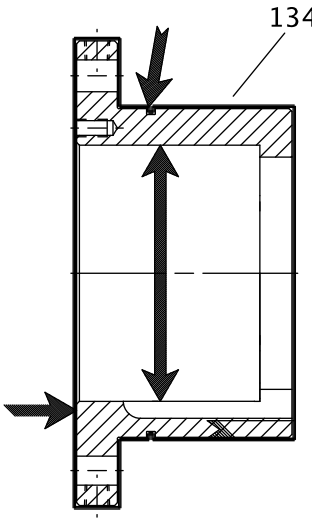

Figure 32: XLT-i and i17 bearing housing

Bearing fits and tolerances

Table 14: Bearing fits and tolerances table

This table references the bearing fits and tolerances according to the ABEC I standard.

	STi inches (millimeters)	MTi inches (millimeters)	LTi inches (millimeters)	XLT-i, i-17 inches (millimeters)
Shaft OD Inboard	1.3785 (35.014) 1.3781 (35.004)	1.7722 (45.014) 1.7718 (45.004)	2.1660 (55.016) 2.1655 (55.004)	2.5597 (65.016) 2.5592 (65.004)
Clearance	0.0010 (0.025) tight 0.0001 (0.003) tight	0.0010 (0.025) tight 0.0001 (0.003) tight	0.0012 (0.030) tight 0.0001 (0.003) tight	0.0012 (0.030) tight 0.0001 (0.003) tight
Bearing ID Inboard	1.3780 (35.001) 1.3775 (34.989)	1.7717 (45.001) 1.7712 (44.988)	2.1654 (55.001) 2.1648 (54.986)	2.5591 (65.001) 2.5585 (64.986)
Frame ID Inboard	2.8346 (72.000) 2.8353 (72.017)	3.9370 (100.000) 3.9379 (100.023)	4.7244 (120.000) 4.7253 (120.023)	5.5118 (140.000) 5.5128 (140.025)
Clearance	0.0012 (0.031) loose 0.0000 (0.000) loose	0.0015 (0.038) loose 0.0000 (0.000) loose	0.0015 (0.038) loose 0.0000 (0.000) loose	0.0017 (0.043) loose 0.0000 (0.000) loose
Bearing OD Inboard	2.8346 (72.000) 2.8341 (71.986)	3.9370 (100.000) 3.9364 (99.985)	4.7244 (120.000) 4.7238 (119.985)	5.5118 (140.000) 5.5111 (139.982)
Shaft OD Outboard	1.1815 (30.010) 1.1812 (30.002)	1.7722 (45.014) 1.7718 (45.004)	1.9690 (50.013) 1.9686 (50.003)	2.5597 (65.016) 2.5592 (65.004)
Clearance	0.0008 (0.020) tight 0.0001 (0.003) tight	0.0010 (0.025) tight 0.0001 (0.003) tight	0.0010 (0.025) tight 0.0001 (0.003) tight	0.0012 (0.030) tight 0.0001 (0.003) tight
Bearing OD Outboard	1.1811 (30.000) 1.1807 (29.990)	1.7717 (45.001) 1.7712 (44.988)	1.9685 (50.000) 1.9680 (49.987)	2.5591 (65.001) 2.5585 (64.986)
Housing OD Outboard	2.8346 (72.000) 2.8353 (72.017)	3.9370 (100.000) 3.9379 (100.022)	4.3307 (110.000) 4.3316 (110.023)	5.5118 (140.000) 5.5128 (140.025)
Clearance	0.0012 (0.031) loose 0.0000 (0.000) loose	0.0015 (0.038) loose 0.0000 (0.000) loose	0.0015 (0.038) loose 0.0000 (0.000) loose	0.0017 (0.043) loose 0.0000 (0.000) loose
Bearing OD Outboard	2.8346 (72.000) 2.8341 (71.986)	3.9370 (100.000) 3.9364 (99.985)	4.3307 (110.000) 4.3301 (109.985)	5.5118 (140.000) 5.5111 (139.982)

Reassembly

Assemble the rotating element and the bearing frame (STi and MTi)

CAUTION:
Wear insulated gloves when you use a bearing heater. Bearings get hot and can cause physical injury.

NOTICE:
Make sure that the pipe threads are clean, and that you apply thread sealant to the plugs and fittings. Failure to do so may result in equipment damage or decreased performance.

NOTICE:
Use an induction heater that heats as well as demagnetizes the bearings when you install bearings. Failure to do so may result in decreased performance.

1. Prepare the bearing frame (228) as follows (see the illustration):
   a) Install the oil-fill plug (113A).
   b) Install the oil-drain plug (408A).
   c) Install the sight glass (319).
   d) Install the sight oiler plug (408J).
   e) Install the plug for the oil-cooler inlet (408L).
   f) Install the plug for the oil-cooler outlet (408M).
   g) Install four oil-mist connection plugs (408H).
      Or: Install two grease fittings (193) and two grease-relief plugs (113).
   h) Attach the bearing-frame foot (241) and fasten the bolts (370F) by hand.

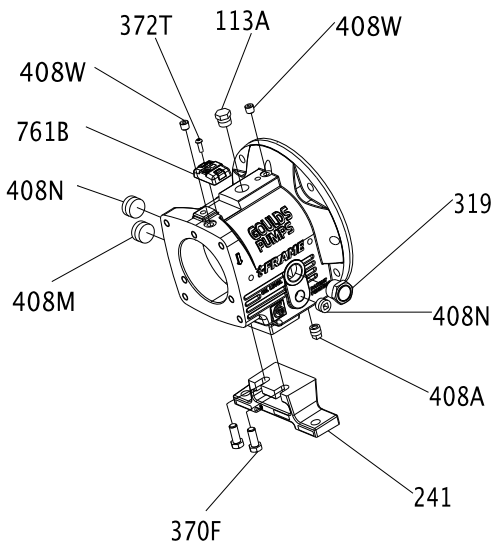

2. Install the outboard bearing (112A) on the shaft (122).
   The regreaseable bearing has a single shield. The outboard bearing is installed with the shield toward the impeller.
   a) Inspect the shaft (122) to ensure that it is clean, dimensionally correct, and is free of nicks and burrs.
   b) Lightly coat the bearing seating with a thin film of oil.
   c) Remove the bearing (112) from its packaging.
   d) Wipe the preservative from the bearing (112) bore and outer diameter.

e) Use an induction heater with a demagnetizing cycle to heat the bearing (112) to an inner ring temperature of 230 °F (110 °C).
f) Position the bearing (112) on the shaft (122) against the shoulder and snug the locknut (136) against the bearing until it is cool.
The locknut prevents the bearing from moving away from the shaft shoulder as it cools.
g) Remove the bearing locknut (136) after the bearing (112) cools.

3. Put the lockwasher (382) onto the shaft (122).
4. Thread the locknut (136) onto the shaft (122) and tighten it until it is snug.
5. Bend the tangs of the lockwasher into the slots of the locknut.
6. Put the bearing-retaining ring (361A) onto the shaft (122).
Make sure that the flat side of the ring is towards the bearing.
7. Coat the inner surfaces of the bearings with lubricant.
8. Put the inboard bearing (168) onto the shaft (122).
The regreasable bearing has a single shield. Make sure that the bearing is installed with the shield away from the impeller.

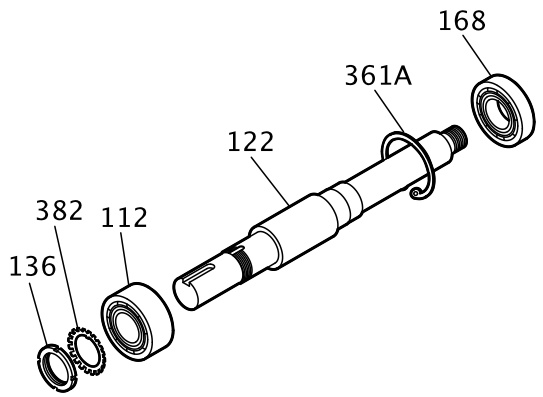

9. Prepare the shaft for assembly as follows (see the illustration):
a) Install a new O-ring (496).
b) Coat the outside of the outboard bearing (112A) with oil.
c) Coat the bore of the bearing housing (134) with oil.
d) Put the bearing housing (134) onto the shaft.
Do not use force.
e) Insert the bearing-retaining ring (361A) into the bore groove of the bearing housing (134).

NOTICE:
Ensure that the space between the ends of the retaining ring are located in the oil-return groove. Failure to do so may result in oil-flow obstruction.

Make sure that the shaft rotates freely.

f) Install the outboard labyrinth oil-seal (332A) into the bearing housing (134).
Place the drain slots of the oil seal at the bottom position (6 o'clock).
Make sure that the edges of the keyway are free from burrs. To protect the O-ring, cover the keyway lengthwise with a piece of electrical tape before you install the oil seal.

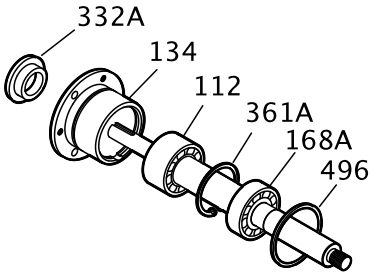

10. Install the shaft assembly into the bearing frame as follows (see the illustration):
    a) Coat the outside of the bearing housing (134) with oil.
    b) Coat all the internal surfaces of the bearing frame (228) with oil.
    c) Install the shaft assembly into the bearing frame (228).
    Make sure that the shaft rotates freely.
    d) Install the clamp bolts (370C) in the bearing housing (134) and tighten by hand.
    e) Install the jack bolts (370D) with the locknuts (423) in the bearing housing (134) and tighten by hand.

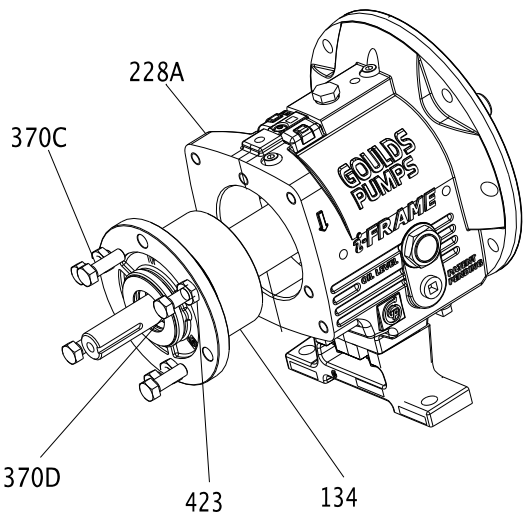

Assemble the rotating element and the bearing frame (STi and MTi with duplex bearings)

CAUTION:
- Wear insulated gloves when you use a bearing heater. Bearings get hot and can cause physical injury.
- Use care when you handle the shaft because it can be heavy. Failure to do so could result in personal injury.

NOTICE:
Make sure that the pipe threads are clean, and that you apply thread sealant to the plugs and fittings. Failure to do so may result in equipment damage or decreased performance.

NOTICE:
Use an induction heater that heats as well as demagnetizes the bearings when you install bearings. Failure to do so may result in decreased performance.

1. Prepare the bearing frame (228) as follows (see the illustration):
   a) Install the oil-fill plug (113A).
   b) Install the oil-drain plug (408A).
   c) Install the sight glass (319).
   d) Install the sight oiler plug (408J).
   e) Install the plug for the oil-cooler inlet (408L).
   f) Install the plug for the oil-cooler outlet (408M).
   g) Install four oil-mist connection plugs (408H).
      Or: Install two grease fittings (193) and two grease-relief plugs (113).
   h) Attach the bearing-frame foot (241) and fasten the bolts (370F) by hand.

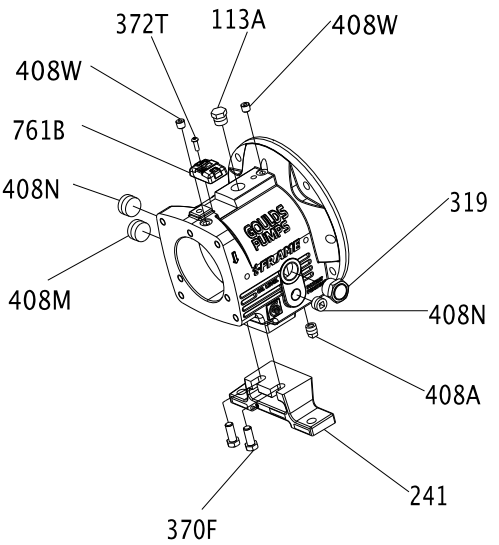

2. Install the outboard bearings (112A) on the shaft (122).
   The regreasable bearing has a single shield. Make sure that the bearing is installed with the shield away from the impeller.
   The duplex bearings are mounted back-to-back. Make sure that the orientation of the bearings are correct.
   a) Inspect the shaft (122) to ensure that it is clean, dimensionally correct, and is free of nicks and burrs.

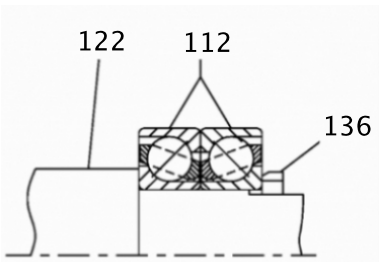

b) Lightly coat the bearing seating with a thin film of oil.
c) Remove the bearings (112) from their packaging.
d) Wipe the preservative from the bearing (112) bore and outer diameter.
e) Use an induction heater with a demagnetizing cycle to heat both bearings (112) to an inner ring temperature of 230 °F (110 °C).
f) Place both bearings (112) on the shaft (122) with the large outer races together (back-to-back).
g) Position the bearings (112) on the shaft (122) against the shoulder and snug the locknut (136) against the bearings until they are cool.
The locknut prevents the bearings from moving away from the shaft shoulder as they cool. Rotate the outer bearing rings relative to each other as they are placed on the shaft to assure good alignment.
h) Remove the bearing locknut (136) after the bearings (112) are cool.

3. Put the lockwasher (382) onto the shaft (122).
4. Thread the locknut (136) onto the shaft (122) and tighten it until it is snug.
5. Bend the tangs of the lockwasher into the slots of the locknut.
6. Place the bearing-clamp ring (253B) onto the shaft (122).
Make sure that the orientation of the bearing-clamp ring is correct.
7. Coat the inner surfaces of the bearings with lubricant.
8. Put the inboard bearing (168) onto the shaft (122).

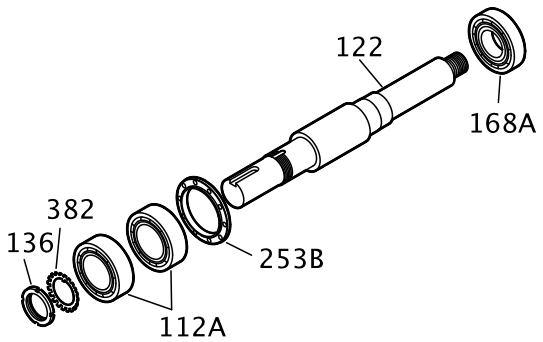

9. Install the bearing housing as follows (see the illustration):
a) Coat the outside of the outboard bearing (112A) with oil.
b) Coat the bore of the bearing housing (134) with oil.
c) Put the bearing housing (134) onto the shaft.
Do not use force.

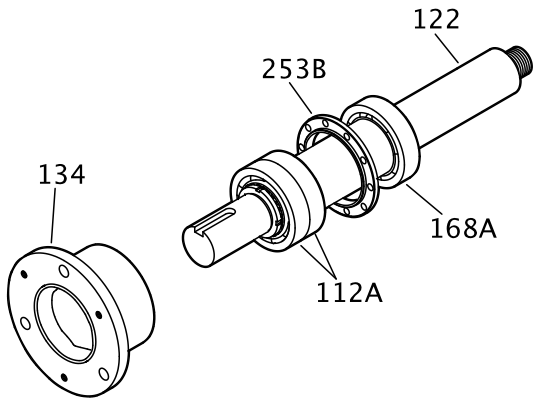

10. Prepare the shaft for assembly as follows (see the illustration):
a) Place the bearing-clamp ring (253B) onto the shaft (122).

b) Fasten the clamp-ring bolts (236A) crosswise.
See the specified torque values.
Make sure that the shaft rotates freely.
c) Install a new O-ring (496).
d) Install the outboard labyrinth oil-seal (332A) into the bearing housing (134).
Place the drain slots of the oil seal at the bottom position (6 o'clock).
Make sure that the edges of the keyway are free from burrs. To protect the O-ring, cover the keyway lengthwise with a piece of electrical tape before you install the oil seal.

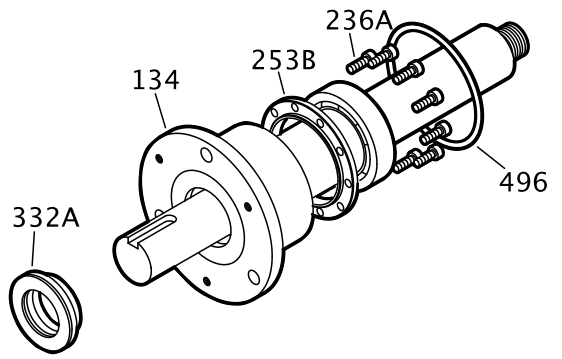

11. Install the shaft assembly into the bearing frame as follows (see the illustration):
a) Coat the outside of the bearing housing (134) with oil.
b) Coat all the internal surfaces of the bearing frame (228) with oil.
c) Install the shaft assembly into the bearing frame (228).
Make sure that the shaft rotates freely.
d) Install the clamp bolts (370C) in the bearing housing (134) and tighten by hand.
e) Install the jack bolts (370D) with the locknuts (423) in the bearing housing (134) and tighten by hand.

Assemble the rotating element and the bearing frame (LTi)

CAUTION:
Wear insulated gloves when you use a bearing heater. Bearings get hot and can cause physical injury.

NOTICE:
Make sure that the pipe threads are clean, and that you apply thread sealant to the plugs and fittings. Failure to do so may result in equipment damage or decreased performance.

NOTICE:
Use an induction heater that heats as well as demagnetizes the bearings when you install bearings. Failure to do so may result in decreased performance.

1. Prepare the bearing frame (228) as follows (see the illustration):
a) Install the oil-fill plug (113A).
b) Install the oil-drain plug (408A).
c) Install the sight glass (319).
d) Install the sight oiler plug (408J).
e) Install the plug for the oil-cooler inlet (408L).
f) Install the plug for the oil-cooler outlet (408M).

g) Install four oil-mist connection plugs (408H).
Or: Install two grease fittings (193) and two grease-relief plugs (113).

h) Attach the bearing-frame foot (241) and fasten the bolts (370F) by hand.

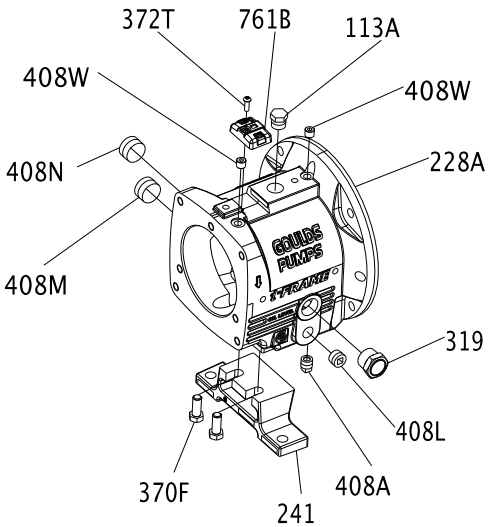

2. Install the oil flinger (248A) onto the shaft (122).

NOTICE:
The oil flinger is press fitted onto the shaft. Use a properly sized driver. Failure to do so may result in damage to the oil flinger.

3. Place the bearing-clamp ring (253B) onto the shaft (122).
Make sure that the orientation of the bearing-clamp ring is correct.
4. Install outboard bearings (112A) on shaft (122).
The regreasable bearing has a single shield. Make sure that the bearing is installed with the shield away from the impeller.
The duplex bearings are mounted back-to-back. Make sure that the orientation of the bearings are correct.
   a) Inspect the shaft (122) to ensure that it is clean, dimensionally correct, and is free of nicks and burrs.

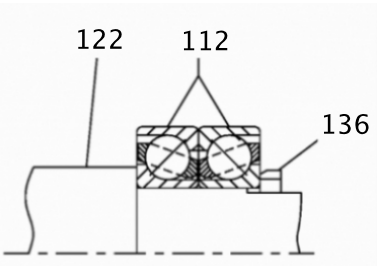

   b) Lightly coat the bearing seating with a thin film of oil.
   c) Remove the bearings (112) from their packaging.
   d) Wipe the preservative from the bearing (112) bore and outer diameter.
   e) Use an induction heater with a demagnetizing cycle to heat both bearings (112) to an inner ring temperature of 230 °F (110 °C).
   f) Place both bearings (112) on the shaft (122) with the large outer races together (back-to-back).

g) Position the bearings (112) on the shaft (122) against the shoulder and snug the locknut (136) against the bearings until they are cool.
The locknut prevents the bearings from moving away from the shaft shoulder as they cool. Rotate the outer bearing rings relative to each other as they are placed on the shaft to assure good alignment.

h) Remove the bearing locknut (136) after the bearings (112) are cool.

5. Put the lockwasher (382) onto the shaft (122).
6. Thread the locknut (136) onto the shaft (122) and tighten it until it is snug.
7. Bend the tangs of the lockwasher into the slots of the locknut.
8. Coat the inner surfaces of the bearings with lubricant.
9. Put the inboard bearing (168) onto the shaft (122).

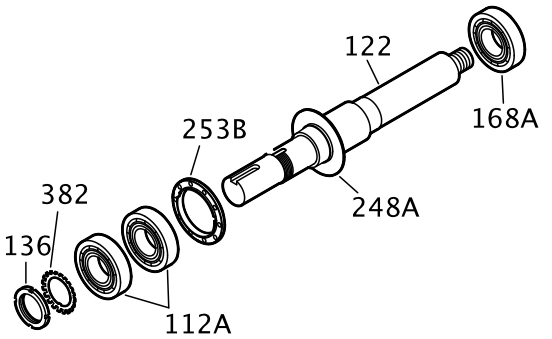

10. Install the bearing housing as follows (see the illustration):
    a) Coat the outside of the outboard bearing (112A) with oil.
    b) Coat the bore of the bearing housing (134) with oil.
    c) Put the bearing housing (134) onto the shaft.
    Do not use force.

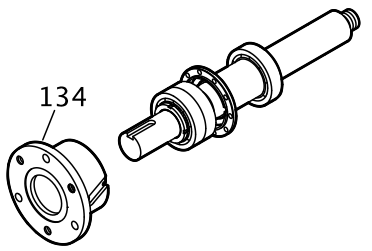

11. Prepare the shaft for assembly as follows (see the illustration):
    a) Fasten the clamp-ring bolts (236A) crosswise.
    See the specified torque values.
    Make sure that the shaft rotates freely.
    b) Install a new O-ring (496).

c) Install the outboard labyrinth oil-seal (332A) into the bearing housing (134).
Place the drain slots of the oil seal at the bottom position (6 o'clock).
Make sure that the edges of the keyway are free from burrs. To protect the O-ring, cover the keyway lengthwise with a piece of electrical tape before you install the oil seal.

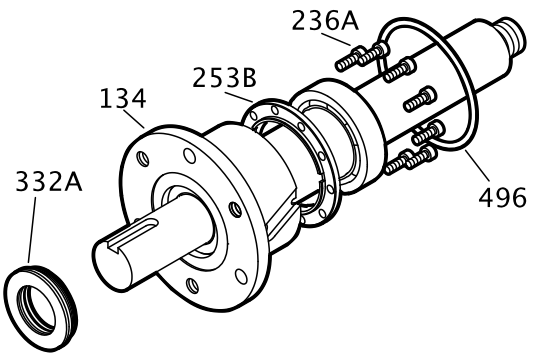

12. Install the shaft assembly into the bearing frame as follows (see the illustration):
    a) Coat the outside of the bearing housing (134) with oil.
    b) Coat all the internal surfaces of the bearing frame (228) with oil.
    c) Install the shaft assembly into the bearing frame (228).
    Make sure that the shaft rotates freely.
    d) Install the clamp bolts (370C) in the bearing housing (134) and tighten by hand.
    e) Install the jack bolts (370D) with the locknuts (423) in the bearing housing (134) and tighten by hand.

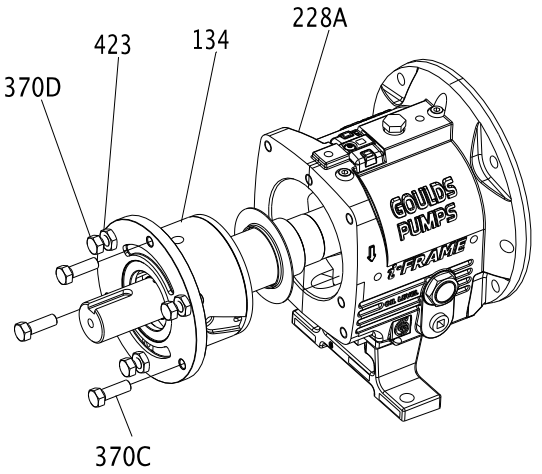

Assemble the rotating element and the bearing frame (XLT-i and i17)

CAUTION:
- Wear insulated gloves when you use a bearing heater. Bearings get hot and can cause physical injury.
- Use care when you handle the shaft because it can be heavy. Failure to do so could result in personal injury.

NOTICE:
Make sure that the pipe threads are clean, and that you apply thread sealant to the plugs and fittings. Failure to do so may result in equipment damage or decreased performance.

NOTICE:
Use an induction heater that heats as well as demagnetizes the bearings when you install bearings. Failure to do so may result in decreased performance.

1. Prepare the bearing frame (228) as follows (see the illustration):
   a) Install the oil-fill plug (113A).
   b) Install the oil-drain plug (408A).
   c) Install the sight glass (319).
   d) Install the sight oiler plug (408J).
   e) Install the plug for the oil-cooler inlet (408L).
   f) Install the plug for the oil-cooler outlet (408M).
   g) Install four oil-mist connection plugs (408H).
      Or: Install two grease fittings (193) and two grease-relief plugs (113).

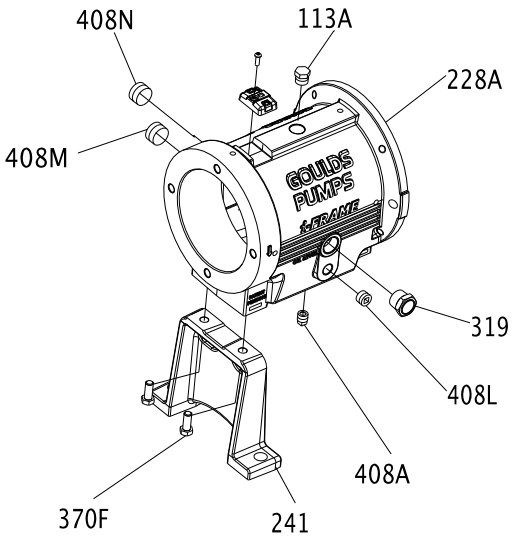

2. Install the outboard bearings (112A) on the shaft (122).
   The regreaseable bearing has a single shield. The outboard bearing is installed with the shield toward the impeller.
   a) Inspect the shaft (122) to ensure that it is clean, dimensionally correct, and is free of nicks and burrs.
   b) Lightly coat the bearing seating with a thin film of oil.
   c) Remove the bearing (112) from its packaging.
   d) Wipe the preservative from the bearing (112) bore and outer diameter.
   e) Use an induction heater with a demagnetizing cycle to heat the bearing (112) to an inner ring temperature of 230 °F (110 °C).
   f) Position the bearing (112) on the shaft (122) against the shoulder and snug the locknut (136) against the bearing until it is cool.
      The locknut prevents the bearing from moving away from the shaft shoulder as it cools.
   g) Remove the bearing locknut (136) after the bearing (112) cools.
3. Put the lockwasher (382) onto the shaft (122).
4. Thread the locknut (136) onto the shaft (122) and tighten it until it is snug.

5. Bend the tangs of the lockwasher into the slots of the locknut.

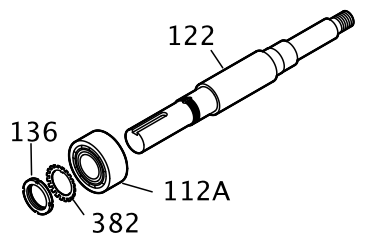

6. Install the bearing housing as follows (see the illustration):
   a) Coat the outside of the outboard bearing (112A) with oil.
   b) Coat the bore of the bearing housing (134) with oil.
   c) Put the bearing housing (134) onto the shaft.
   Do not use force.

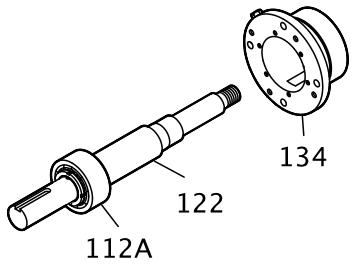

7. Fasten the gasket (360C) and the end cover (109A) with the bolts (371C).
   See the specified torque values.
   Make sure that the shaft rotates freely.

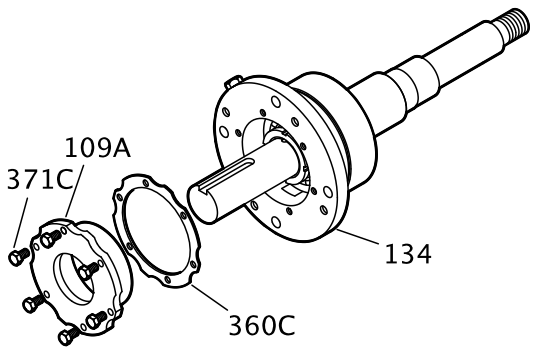

8. Install the inboard bearing as follows (see the illustration):
   a) Coat the inner surfaces of the bearings with lubricant.
   b) Put the inboard bearing (168) onto the shaft (122).
   The regreasable bearing has a single shield. Make sure that the bearing is installed with the shield away from the impeller.

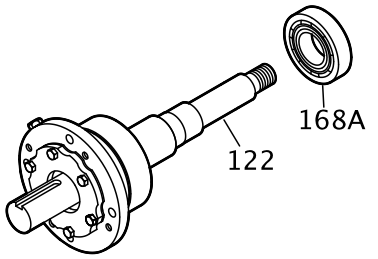

9. Install the remaining parts onto the bearing shaft as follows (see the illustration):
   a) Install a new O-ring (496).
   b) Install the outboard labyrinth oil-seal (332A) into the end cover (109A).
      Place the drain slots of the oil seal at the bottom position (6 o'clock).
      Make sure that the edges of the keyway are free from burrs. To protect the O-ring, cover the keyway lengthwise with a piece of electrical tape before you install the oil seal.

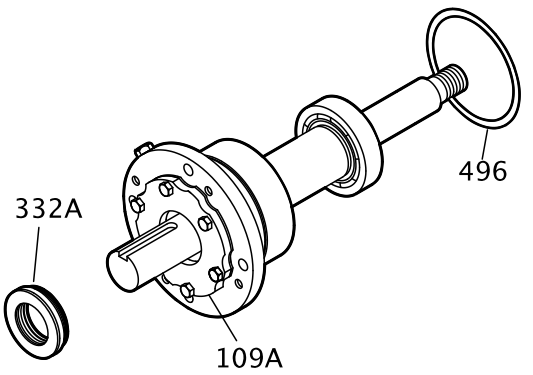

10. Install the shaft assembly into the bearing frame as follows (see the illustration):
    a) Coat the outside of the bearing housing (134) with oil.
    b) Coat all the internal surfaces of the bearing frame (228) with oil.
    c) Install the shaft assembly into the bearing frame (228).
       Make sure that the shaft rotates freely.
    d) Install the clamp bolts (370C) in the bearing housing (134) and tighten by hand.
    e) Install the jack bolts (370D) with the locknuts (423) in the bearing housing (134) and tighten by hand.
    f) Attach the bearing-frame foot (241) and fasten the bolts (370F) by hand.

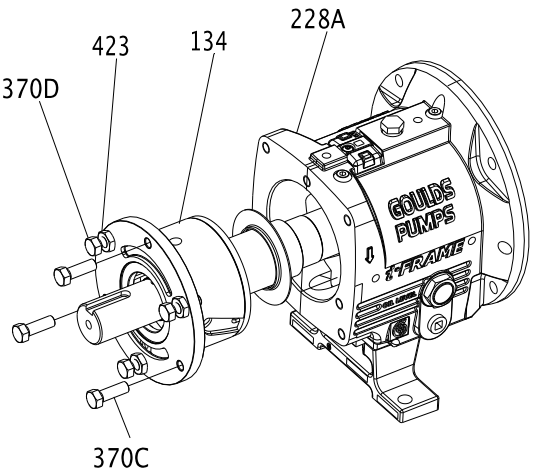

Assemble the rotating element and the bearing frame (XLT-i and i17 with duplex bearings)

CAUTION:
- Wear insulated gloves when you use a bearing heater. Bearings get hot and can cause physical injury.
- Use care when you handle the shaft because it can be heavy. Failure to do so could result in personal injury.

NOTICE:
Make sure that the pipe threads are clean, and that you apply thread sealant to the plugs and fittings. Failure to do so may result in equipment damage or decreased performance.

NOTICE:
Use an induction heater that heats as well as demagnetizes the bearings when you install bearings. Failure to do so may result in decreased performance.

1. Prepare the bearing frame (228) as follows (see the illustration):
   a) Install the oil-fill plug (113A).
   b) Install the oil-drain plug (408A).
   c) Install the sight glass (319).
   d) Install the sight oiler plug (408J).
   e) Install the plug for the oil-cooler inlet (408L).
   f) Install the plug for the oil-cooler outlet (408M).
   g) Install four oil-mist connection plugs (408H).
      Or: Install two grease fittings (193) and two grease-relief plugs (113).

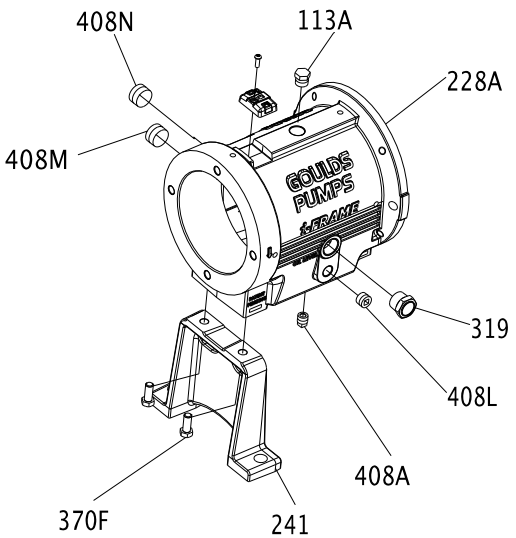

2. Install the outboard bearings (112A) on the shaft (122).
   The regreasable bearing has a single shield. Make sure that the bearing is installed with the shield away from the impeller.
   The duplex bearings are mounted back-to-back. Make sure that the orientation of the bearings are correct.
   a) Inspect the shaft (122) to ensure that it is clean, dimensionally correct, and is free of nicks and burrs.

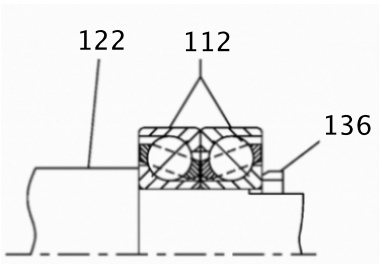

   b) Lightly coat the bearing seating with a thin film of oil.

c) Remove the bearings (112) from their packaging.
d) Wipe the preservative from the bearing (112) bore and outer diameter.
e) Use an induction heater with a demagnetizing cycle to heat both bearings (112) to an inner ring temperature of 230 °F (110 °C).
f) Place both bearings (112) on the shaft (122) with the large outer races together (back-to-back).
g) Position the bearings (112) on the shaft (122) against the shoulder and snug the locknut (136) against the bearings until they are cool.
The locknut prevents the bearings from moving away from the shaft shoulder as they cool. Rotate the outer bearing rings relative to each other as they are placed on the shaft to assure good alignment.
h) Remove the bearing locknut (136) after the bearings (112) are cool.

3. Put the lockwasher (382) onto the shaft (122).
4. Thread the locknut (136) onto the shaft (122) and tighten it until it is snug.
5. Bend the tangs of the lockwasher into the slots of the locknut.

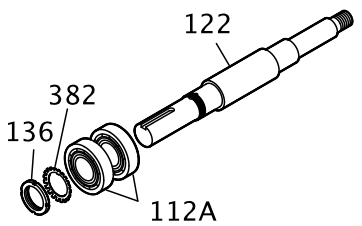

6. Install the bearing housing as follows (see the illustration):
a) Coat the outside of the outboard bearing (112A) with oil.
b) Coat the bore of the bearing housing (134) with oil.
c) Put the bearing housing (134) onto the shaft.
Do not use force.

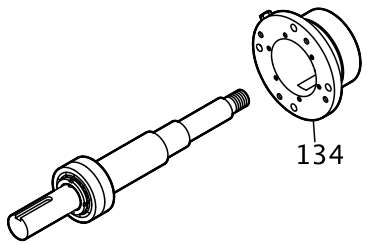

7. Fasten the gasket (360C) and the end cover (109A) with the bolts (371C).
See the specified torque values.
Make sure that the shaft rotates freely.

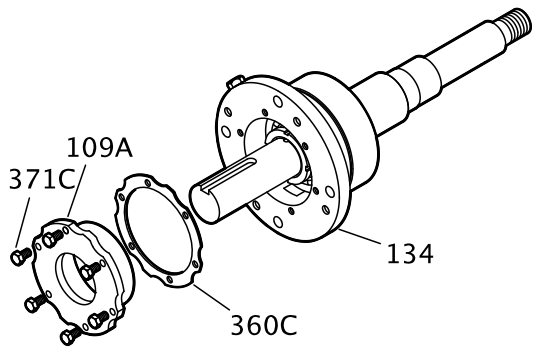

8. Install the inboard bearing as follows (see the illustration):

a) Coat the inner surfaces of the bearings with lubricant.
b) Put the inboard bearing (168) onto the shaft (122).
The regreasable bearing has a single shield. Make sure that the bearing is installed with the shield away from the impeller.

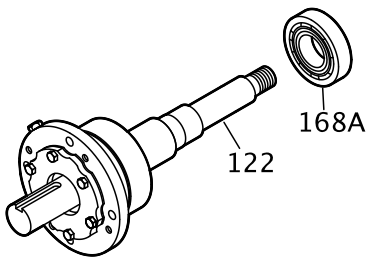

9. Install the remaining parts onto the bearing shaft as follows (see the illustration):
a) Install a new O-ring (496).
b) Install the outboard labyrinth oil-seal (332A) into the end cover (109A).
Place the drain slots of the oil seal at the bottom position (6 o'clock).
Make sure that the edges of the keyway are free from burrs. To protect the O-ring, cover the keyway lengthwise with a piece of electrical tape before you install the oil seal.

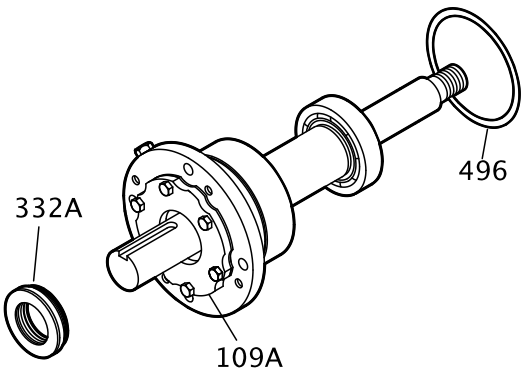

10. Install the shaft assembly into the bearing frame as follows (see the illustration):
a) Coat the outside of the bearing housing (134) with oil.
b) Coat all the internal surfaces of the bearing frame (228) with oil.
c) Install the shaft assembly into the bearing frame (228).
Make sure that the shaft rotates freely.
d) Install the clamp bolts (370C) in the bearing housing (134) and tighten by hand.
e) Install the jack bolts (370D) with the locknuts (423) in the bearing housing (134) and tighten by hand.

f) Attach the bearing-frame foot (241) and fasten the bolts (370F) by hand.

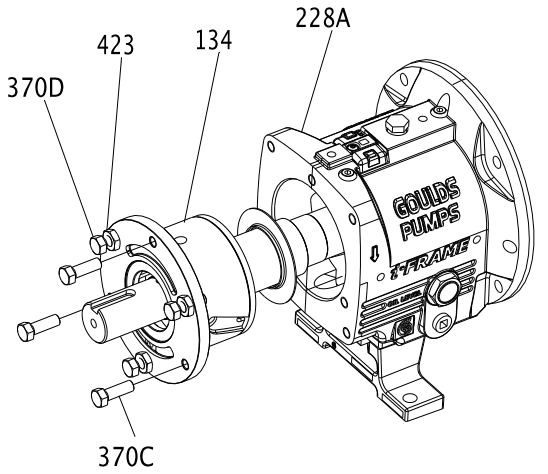

Assemble the frame

1. Support the frame assembly in a horizontal position.
2. Check the shaft-end play by moving the shaft forward and backward by hand, and note any indicator movement.
   If the total indicator reading is greater than the values in this table, then disassemble the shaft and determine the cause.

Table 15: Shaft-end play

Use this table as a reference for shaft-end play values.

Frame	Double row bearing	Duplex bearing
STi inches (millimeters)	0.0011 (0.028) 0.0019 (0.048)	0.0007 (0.018) 0.0010 (0.025)
MTi inches (millimeters)	0.0013 (0.033) 0.0021 (0.053)	0.0009 (0.023) 0.0012 (0.030)
LTi inches (millimeters)	Not applicable	0.0010 (0.025) 0.0015 (0.038)
XLT-i inches (millimeters)	0.0014 (0.036) 0.0023 (0.058)	0.0010 (0.025) 0.0015 (0.038)

Frame	Double row bearing	Duplex bearing

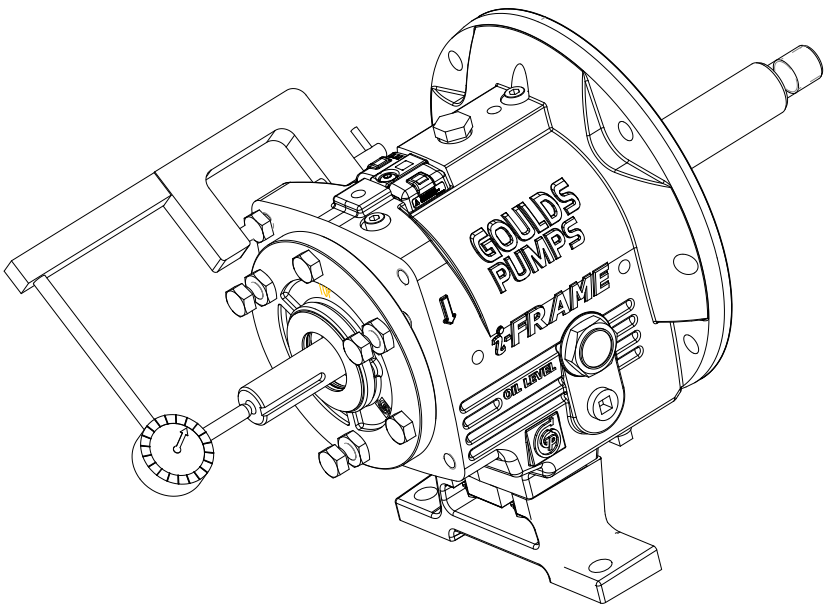

3. Check the shaft-sleeve (126) runout.
   a) Install the shaft sleeve.
   b) Thread the impeller on the shaft until hand tight.
   c) Rotate the shaft 360º.
   d) If the total indicator reading is greater than 0.002 in. (0.051 mm), then disassemble the shaft sleeve and determine the cause.
   e) Remove the impeller and shaft sleeve.

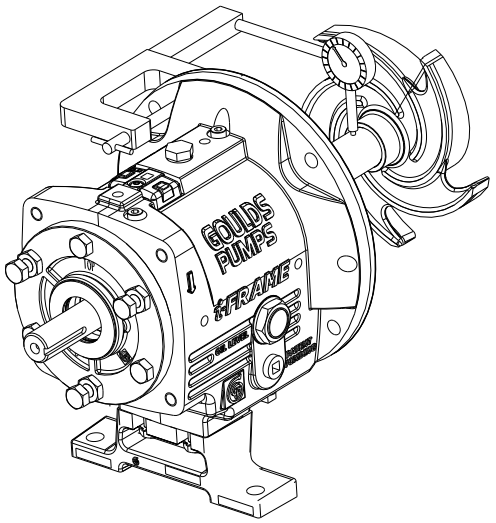

4. Check the frame-face runout by rotating the shaft so that the indicator measures the fit for 360º.
   If the total indicator reading is greater than 0.001 in. (0.025 mm), then disassemble and determine the cause.

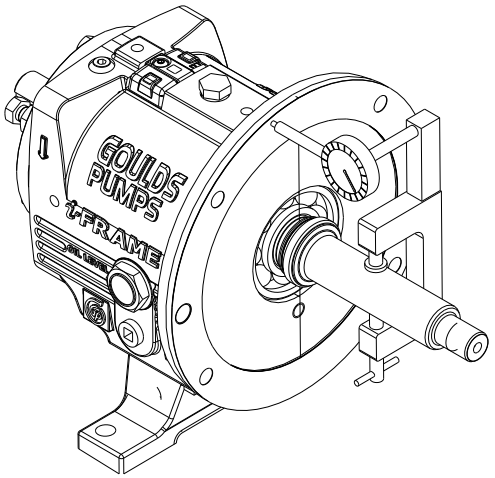

5. Place the manila gasket (360D) on the frame (228), and hold the gasket in place by inserting the dowel pins (469B) in their holes.
   The gasket is designed to fit only one way.
6. Install the frame adapter.
   a) Place the frame adapter (108) onto the frame assembly.
   b) Align the bolt holes and dowel locations on the frame adapter with the bolt holes and dowel locations on the frame.

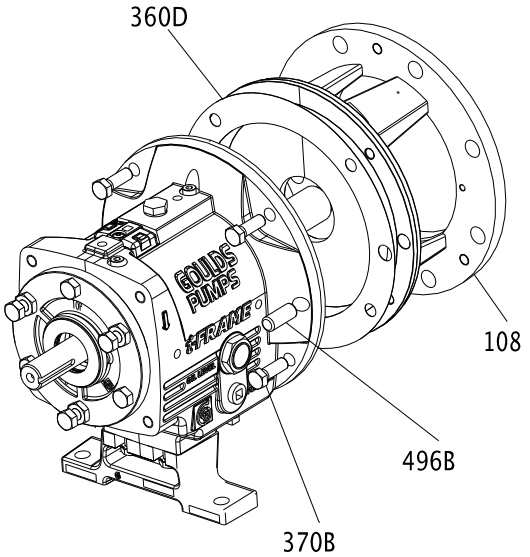

   c) Install the dowel pins (469B) and bolts (370B). Tighten the bolts in a criss-cross pattern according to the specifications in the bolt torque values table.

d) Rotate the shaft 360º to check the adapter fit.
If the total indicator reading is greater than 0.005 in. (0.13 mm), then determine the cause and correct it before you proceed.

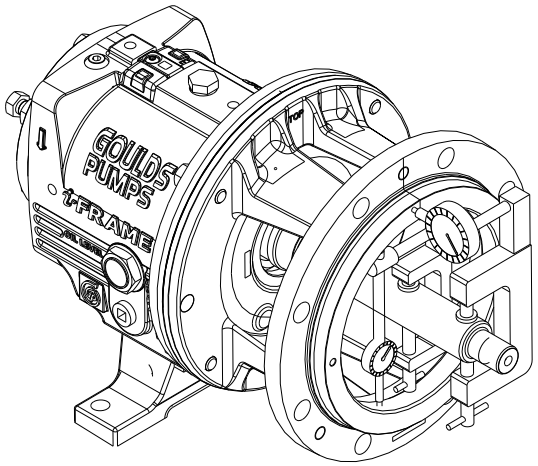

7. Install the labyrinth oil-seal (333A) into the adapter (108) and the bearing frame (228).
The labyrinth oil seal is an O-ring fit.
8. Position the labyrinth oil-seal drain slots at the bottom (6 o'clock) position.
Refer to Assemble the INPRO labyrinth oil-seal for more information on the labyrinth oil-seal installation.

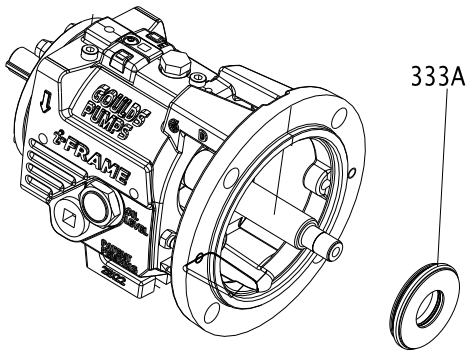

INPRO labyrinth oil seal description

Description

The INPRO VBXX-D Labyrinth Oil Seal consists of the rotor (1), the stator (2), and the VBX Ring (3). The rotor (1) fits over the shaft and is held in place by an elastomeric drive ring (4). The drive ring causes the rotor to turn with the shaft and provides a positive, static seal against the shaft. Since there is no metal-to-metal contact, there are no friction or wear concerns.

NOTICE:
The INPRO VBX is a one-piece design. Do not attempt to separate the rotor from the stator before or during installation. Doing so may result in equipment damage.

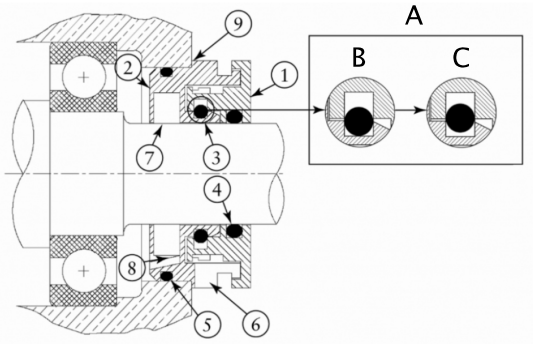

A	"VBX" O-ring action
B	Static
C	Dynamic
1	Rotor
2	Stator
3	"VBX" ring
4	Rotor drive ring
5	Stator gasket
6	Expulsion port
7	D groove
8	Lube return
9	Location shoulder

Assemble the INPRO labyrinth oil seal

1. Wrap electrical tape around the coupling end of the shaft to cover the keyway.

   NOTICE:
   The edges of the keyway can be sharp. Make sure to cover the keyway with tape. Failure to do so may result in cutting the O-ring and damaging the seal.

2. Lightly lube the shaft and the drive ring (4) with lubricant.
   Lubricant helps in the installation process. Be sure that the lubricant is compatible with the O-ring material and the pump-system standards.
3. Use an arbor press to install the outboard INPRO VBXX-D into the bearing cover with the expulsion port (6) at the 6 o'clock position.
   Press the outboard INPRO VBXX-D down to where the stator location ramp (9) starts to avoid angular misalignment. There is a nominal 0.002 in. (0.051 mm) interference fit.
4. Discard any residual material from the stator gasket (5).
5. Complete the applicable step in this table depending on the model of your pump.

Pump model	Action
STi	Press the inboard seal along the shaft into the bearing frame.
All other models	After you install the frame adapter on the bearing frame, press the inboard seal over the shaft and into the adapter.

Assemble the C-face adapter

1. Mount the pump and the motor-coupling hubs if they are not already mounted.
2. Slide the C-face adapter over the pump shaft and mount it against the bearing-frame flange using four bolts.
3. Mount the motor to the C-face adapter using either four or eight motor bolts.

Table 16: Motor-bolt torque values for C-face adapter to frame

This table contains the motor-bolt torque values for assembling the C-face adapter to a frame.

Frame	Lubricated threads	Dry threads
STi	20 ft-lb (27 Nm)	30 ft-lb (41 Nm)
MTi	20 ft-lb (27 Nm)	30 ft-lb (41 Nm)
LTi	20 ft-lb (27 Nm)	30 ft-lb (41 Nm)

Table 17: Motor-bolt torque values for C-face adapter to motor

This table contains the motor-bolt torque values for assembling the C-face adapter to a motor.

Frame	Lubricated threads	Dry threads
143TC-145TC	8 ft-lb (11 Nm)	12 ft-lb (16 Nm)
182TC-286TC	20 ft-lb (27 Nm)	30 ft-lb (41 Nm)
324TC-365TC	39 ft-lb (53 Nm)	59 ft-lb (80 Nm)

Shaft sealing

WARNING:
The mechanical seal used in an Ex-classified environment must be properly certified. Prior to startup, make sure that all areas that could leak pumped fluid to the work environment are closed.

NOTICE:
The mechanical seal must have an appropriate seal-flush system. Otherwise, excess heat generation and seal failure can occur.

Methods for sealing the shaft

These sections discuss the methods that you can use to seal the shaft.

- Seal the shaft with a dynamic seal.
- Seal the shaft with a cartridge-mechanical seal.
- Seal the shaft with a conventional inside-component mechanical seal.
- Seal the shaft with a conventional outside-component mechanical seal.
- Seal the shaft with a packed stuffing box.

Seal the shaft with a dynamic seal

1. Place the backplate (444) with the flat side down on the bench.

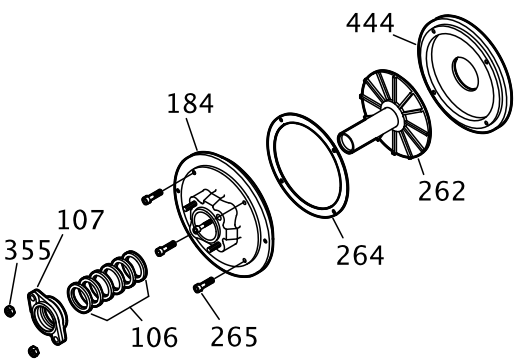

2. Place the repeller (262) in the backplate (444) with the sleeve side up.
3. Place a Teflon gasket (264) on the backplate (444) and align the holes in the gasket with the holes in the backplate.
4. Place a stuffing-box cover (184) on the backplate (444) and align the holes in the gasket with the holes in the backplate.
5. Install four socket-head capscrews (265) and tighten them securely.
6. Install a new sealing element into the gland.

7. Install a gasket (360Q) and gland (107) on the stuffing-box cover (184).
8. Install the nuts (355).
9. Install a dynamic-seal assembly and nuts (370H).

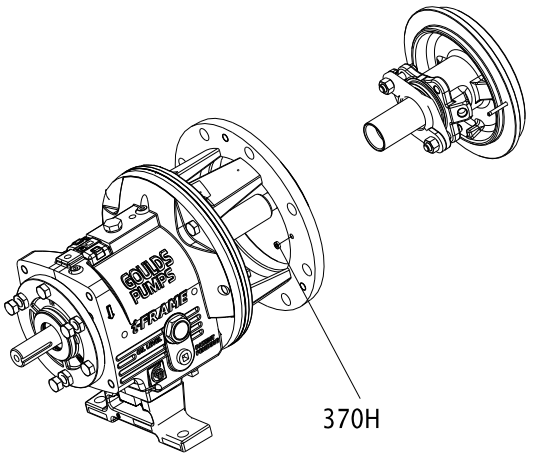

10. Check the stuffing-box-cover runout and rotate the indicator through 360 degrees. An indicator reading that is greater than 0.005 in. (0.013 mm) indicates a problem.

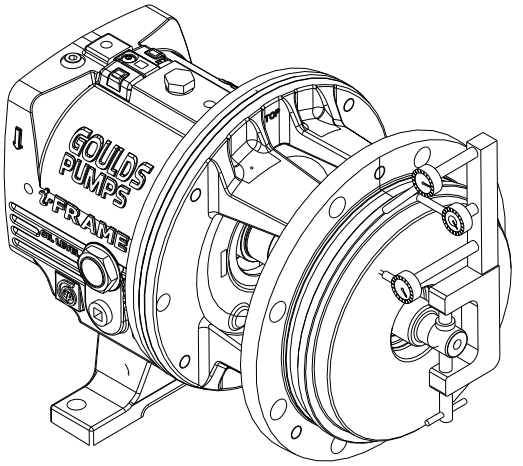

Seal the shaft with a packed stuffing box

WARNING:
Packed stuffing boxes are not allowed in an ATEX-classified environment.

Pumps are shipped without the packing, lantern ring, or split gland installed. These parts are included with the box of fittings shipped with each pump and must be installed before startup.

1. Carefully clean the stuffing-box bore.

2. Twist the packing enough to get it around the shaft.

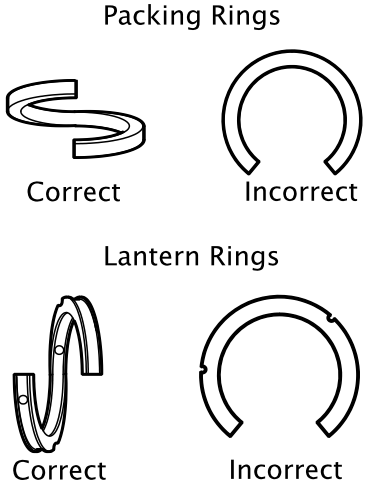

3. Insert the packing and stagger the joints in each ring by 90°.
   Install the stuffing-box parts in this order:
   a) Two packing rings
   b) One lantern ring (two-piece)
   c) Three packing rings

NOTICE:
Make sure that the lantern ring is located at the flushing connection to ensure that flush is obtained. Failure to do so may result in decreased performance.

4. Install the gland halves and evenly hand-tighten the nuts.

Seal the shaft with a cartridge mechanical seal

WARNING:
The mechanical seal used in an Ex-classified environment must be properly certified. Prior to startup, make sure that all areas that could leak pumped fluid to the work environment are closed.

NOTICE:
The mechanical seal must have an appropriate seal-flush system. Otherwise, excess heat generation and seal failure can occur.

1. Slide the cartridge seal onto the shaft or sleeve until it contacts the inboard labyrinth oil seal.
2. Assemble the seal chamber.
3. Slide the cartridge seal into the seal chamber and secure using the four studs and nuts.
4. Continue with the pump reassembly.
5. Set the impeller clearance.
   Refer to the Impeller clearance setting topic for more information.
6. Tighten the setscrews in the seal locking ring in order to secure the seal to the shaft.
7. Remove the centering clips from the seal.

Seal the shaft with a conventional inside-component mechanical seal

WARNING:
The mechanical seal used in an Ex-classified environment must be properly certified. Prior to startup, make sure that all areas that could leak pumped fluid to the work environment are closed.

NOTICE:
The mechanical seal must have an appropriate seal-flush system. Otherwise, excess heat generation and seal failure can occur.

1. Assemble the seal chamber:
   a) Install a seal-chamber cover or a backplate (184) and fasten with nuts (370H) with .

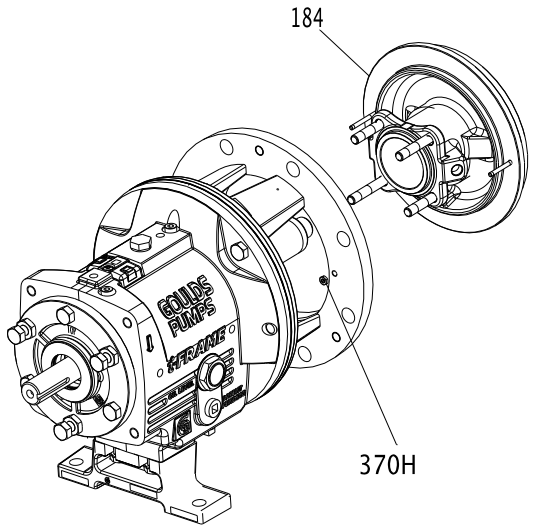

   b) Check the seal-chamber cover runout.

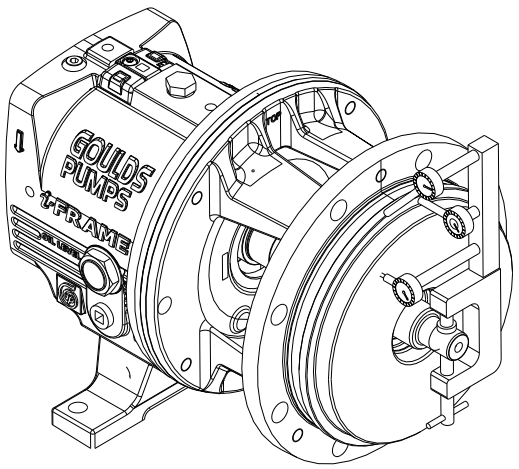

Rotate the indicator through 360º. If the total indicator reading is greater than 0.005 inches (0.13 mm), determine the cause and correct the issue before you proceed.

c) Install the shaft sleeve (126).

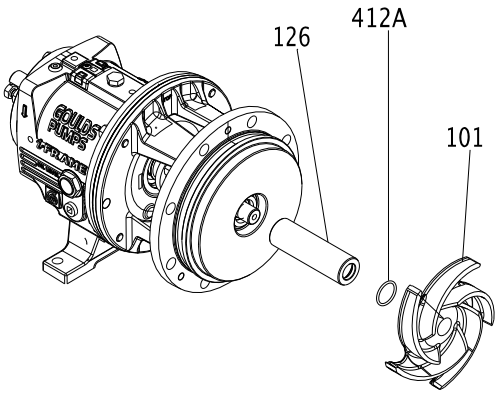

2. Mark the shaft and sleeve at the face of the seal chamber.
3. Continue the complete reassembly of the pump, except for the mechanical seal.
4. Set the impeller clearance.
   Refer to the Impeller Clearance Setting section for more information.
5. Scribe a line on the marked shaft and sleeve at the face of the seal chamber.
6. Remove the casing, the impeller, and the seal chamber.
7. If applicable, slide the gland, with the stationary seat and gland gasket installed, onto the shaft until it contacts the inboard labyrinth oil seal.
8. Install the mechanical-seal rotary unit according to the manufacturer's instructions.
   Use the scribed line and the seal-reference dimension.
9. Reinstall the seal chamber.
10. Slide the gland on the seal-chamber studs and secure them with the gland nuts.
    Tighten the nuts evenly so that the gland is seated on the seal-chamber pilot and is perpendicular to the shaft.
11. Complete the reassembly of the pump.

Seal the shaft with a conventional outside-component mechanical seal

WARNING:
The mechanical seal used in an Ex-classified environment must be properly certified. Prior to startup, make sure that all areas that could leak pumped fluid to the work environment are closed.

NOTICE:
The mechanical seal must have an appropriate seal-flush system. Otherwise, excess heat generation and seal failure can occur.

1. Assemble the seal chamber.

a) Install the seal-chamber cover or backplate (184) and fasten with nuts (370H).

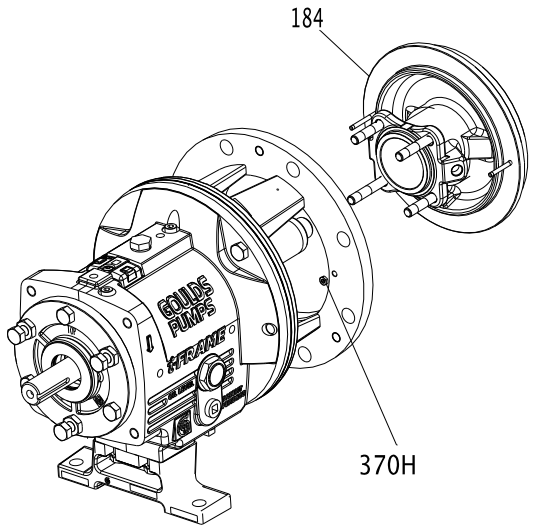

b) Check the seal-chamber cover runout.

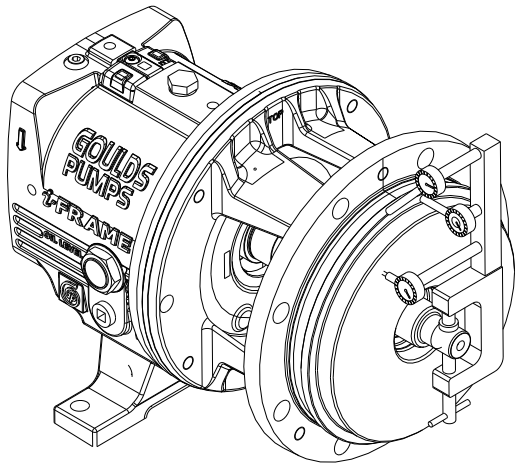

Rotate the indicator through 360 degrees. If the total indicator reading is greater than 0.005 in. (0.13 mm), determine the cause and correct the issue before you proceed.

c) Install the shaft sleeve (126).

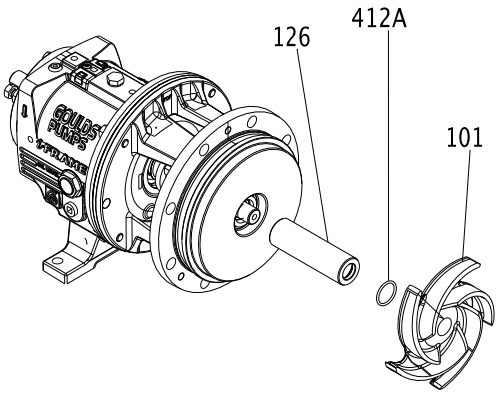

2. Mark the shaft and sleeve at the face of the seal chamber.
3. Continue the complete reassembly of the pump, except for the mechanical seal.
4. Set the impeller clearance.
   Refer to the Impeller clearance setting section for more information.
5. Scribe a line on the marked shaft and sleeve at the face of the seal chamber.
6. Remove the casing, the impeller, and the seal chamber.
7. Install the mechanical-seal rotary unit per the manufacturer's instructions.
   Use the scribed line as the seal-reference dimension. Be sure to secure the rotary unit in place using the set screws in the locking ring.
8. Install the gland, with the stationary seat and gland gaskets installed, on the seal chamber.
9. Reinstall the seal chamber.
10. Complete the reassembly of the pump.

Install the impeller

CAUTION:
Wear heavy work gloves when you handle impellers. The sharp edges can cause physical injury.

1. Install the impeller.

Pump size	Action
STi, MTi, and LTi	Install the impeller (101). Use a new impeller O-ring (412A).
XLT-i and i17	Install the impeller (101) and a Teflon washer (428D) on the plug (458Y). Use a new impeller O-ring (412A).

2. Attach a shaft wrench and a coupling key on the shaft.
   a) When the impeller (101) makes firm contact with the sleeve (126), raise the shaft wrench (counterclockwise, viewed from the impeller end of the shaft) off of the bench and slam it down (clockwise, viewed from the impeller end of shaft).

b) Apply a few sharp raps to tighten the impeller (101).

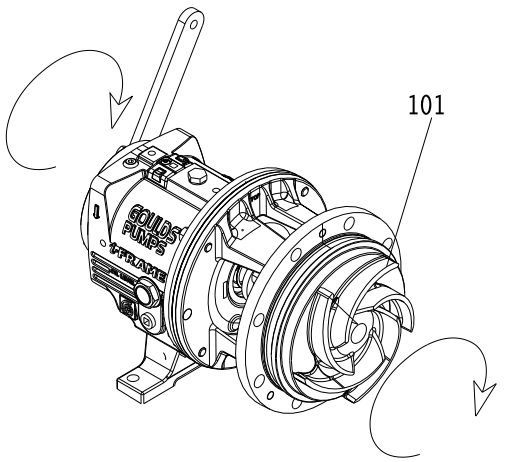

3. Loosen the clamp bolts (370C) and the jack bolts (370D).
4. Measure the gap between the impeller (101) and the seal chamber and stuffing-box cover (184) with a feeler gauge.

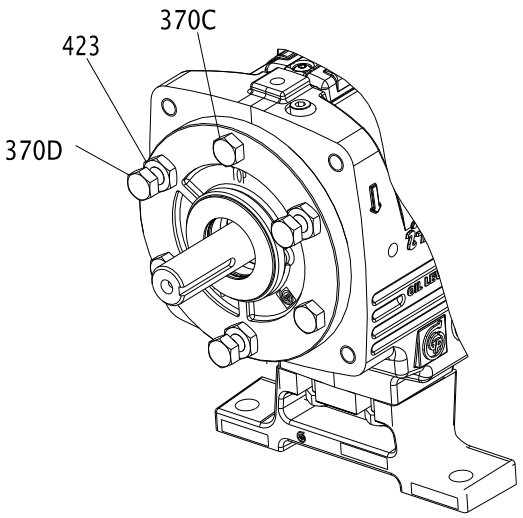

5. When you reach a 0.030 in. (0.76 mm) clearance, tighten the clamp bolts (370C), jack bolts (370D), and lock nuts (423).
   This approximates the impeller position when it is set to 0.015 in. (0.38 mm) from the casing. Perform a final impeller adjustment after you install the impeller into the casing.
6. Check the impeller (101) runout.

Check vane tip to vane tip. If the total indicator reading is greater than 0.005 in. (0.13 mm), determine the cause and correct the issue before you proceed.

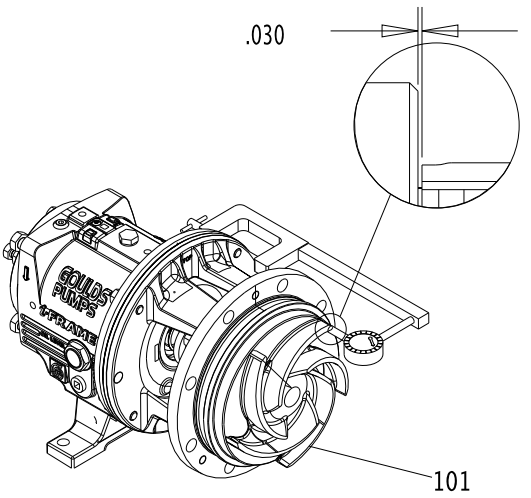

For more information on how to set the impeller clearances, refer to the Impeller-clearance checks and Impeller-clearance setting sections in Commissioning, Startup, Operation, and Shutdown.

Attach the i-ALERT™ Condition Monitor to the pump

CAUTION:
Always wear protective gloves. The pump and condition monitor can be hot.

Tools required:

- 5/32 inch hex wrench

1. Attach the condition monitor (761B) to the bearing frame (228A) using the hex-head screw (372T) provided.

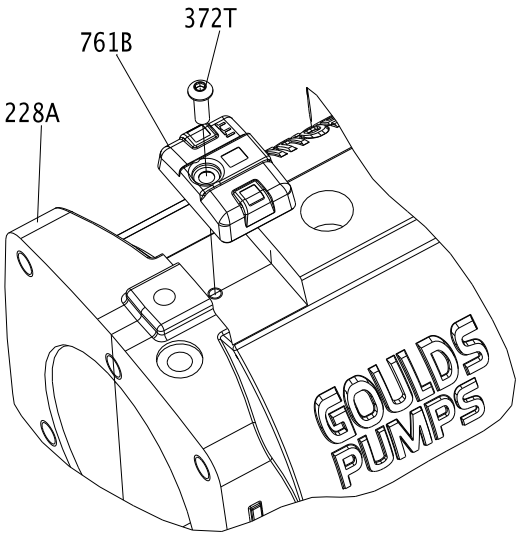

2. Tighten the hex-head screw with a 5/32 inch hex wrench to 6 ft-lbs (8 Nm).

Post-assembly checks

Perform these checks after you assemble the pump, then continue with pump startup:

- Rotate the shaft by hand in order to make sure that it rotates easily and smoothly and that there is no rubbing.
- Open the isolation valves and check the pump for leaks.

Install the back pull-out assembly (except HT 3196)

CAUTION:
Never remove the back pull-out assembly without assistance.

1. Clean the casing fit and install the casing gasket (351) on the seal chamber and stuffing-box cover.
2. Loosen the clamping bolts (370C) and jack bolts (370D) on the bearing housing.

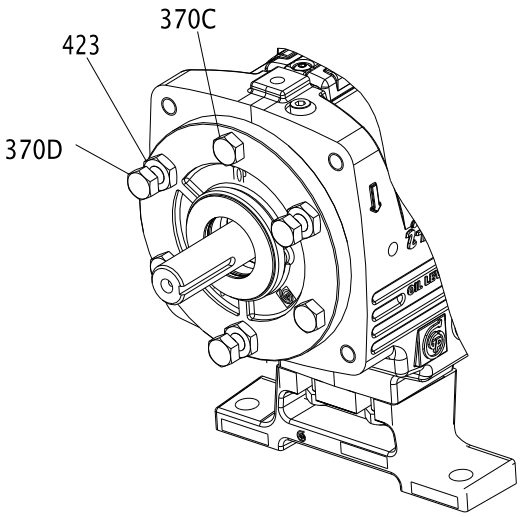

3. Install the back pull-out assembly in the casing.

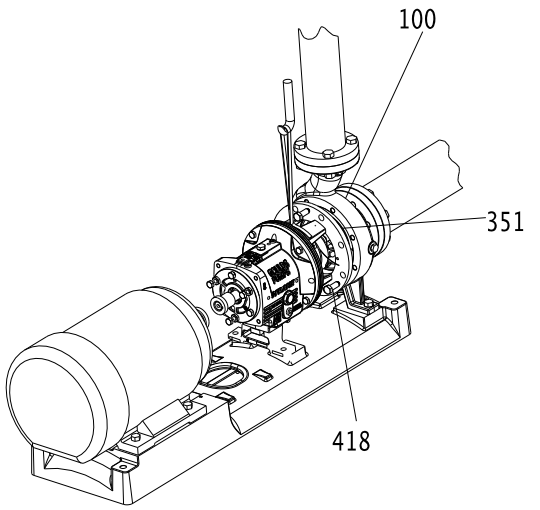

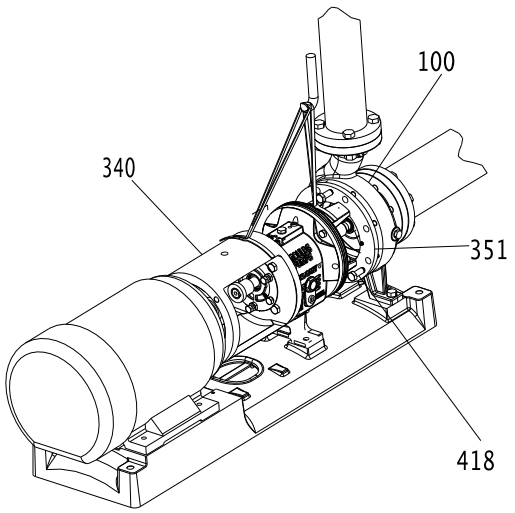

4. Install and then hand-tighten the casing bolts (370).
   Refer to the bolt torque values for information on how to tighten the casing bolts.
5. Install and tighten the casing jackscrews (418).

NOTICE:
Do not overtighten the casing jackscrews. Doing so may result in equipment damage.

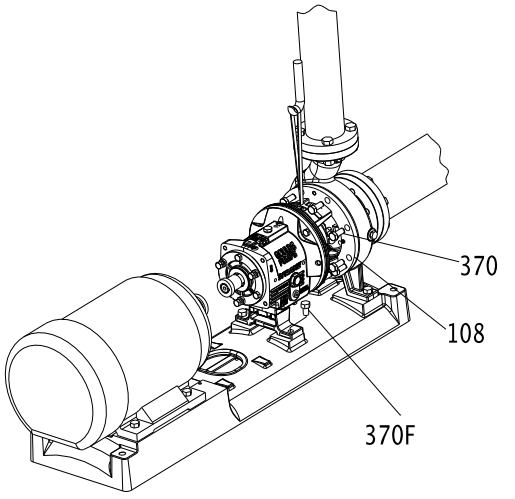

6. Reinstall the shims under the frame foot and tighten the frame foot to the baseplate.
   Make sure that you use the proper shim. Mount a dial indicator in order to measure the distance between the top of the frame and the baseplate. Make sure that the distance does not change as you tighten the frame-foot bolts.
7. Check the total clearance of the impeller in the casing.
   With new parts, an acceptable range is 0.030 in. (0.76 mm) to 0.065 in. (1.65 mm). If the impeller clearance is outside of this range, you either have the incorrect parts, an improper installation, or too much pipe strain. Determine the cause and correct the problem before you proceed.
8. Adjust the impeller clearance.
   Refer to the Impeller clearance setting section for more information.
9. Replace the auxiliary piping.
10. Fill the pump with the proper lubricant. See Lubricating-oil requirements.
11. Reinstall the coupling guard.

See Install the coupling guard for more information.

NOTICE:
Risk of damage to the mechanical seal or shaft sleeve on units supplied with cartridge mechanical seals. Prior to startup, make sure to tighten the set screws in the seal locking ring and remove the centering clips.

Assembly references

Bolt torque values

Table 18: Bolt torque, lb-ft (Nm)

This table provides the bolt torque values.

Location	Frame	3196, CV 3196, LF 3196, 3796		NM 3196		3198	
		Lube	Dry	Lube	Dry	Lube	Dry
Casing bolts (370) or casing nuts (425)	6-in. STi	Refer to the maximum torque values in lb-ft (Nm) for casing bolts table.		27 (36)	40 (53)	N/A	N/A
	8-in. STi			20 (27)	30 (40)	35 (47)	53 (71)
	MTi, LTi			27 (36)	40 (53)	35 (47)	53 (71)
	XLT-i, i17			N/A	N/A	N/A	N/A
Frame-to-adapter bolts	All	20 (27)	30 (40)	20 (27)	30 (40)	20 (27)	30 (40)
Bearing-clamp ring bolts (236A) - duplex bearing only	STi, MTi	10* (1.1)	17* (1.9)	10* (1.1)	17* (1.9)	10* (1.1)	17* (1.9)
	LTi	55* (6.2)	83* (9.4)	55* (6.2)	83* (9.4)	55* (6.2)	83* (9.4)
Bearing end cover bolts (371C)	XLT-i, i17	9 (12)	12 (16)	N/A	N/A	N/A	N/A
Dynamic seal cap-screws (265)	STi, MTi, LTi	55* (6.2)	83* (9.4)	N/A	N/A	N/A	N/A
	XLT-i, i17	9 (12)	12 (16)	N/A	N/A	N/A	N/A
* Values are in lb-in. (Nm)							

Table 19: Maximum torque values in lb-ft (Nm) for casing bolts

This table provides the maximum torque values for casing bolts.

		Models 3196, CV 3196 LF 3196, 3796 with 150 lb (68 kg) casing flanges				Model HT 3196 and all models with 300 lb (136 kg) casing flanges	
		Material specification					
		Ductile iron casing with A307 Grade B casing bolts		Alloy casing with (304SS) F593 Grade 1 or (316SS F593) Grade 2 casing bolts		Ductile iron and alloy casings with A193 grade B7 casing bolts	
Frame	Casing bolt diameter (in.)	Lube	Dry	Lube	Dry	Lube	Dry
8 in. STi	0.50	20 (27)	30 (41)	35 (47)	54 (73)	58 (79)	87 (118)
6 in. STi	0.625	39 (53)	59 (80)	71 (96)	107 (145)	115 (156)	173 (235)
MTi	0.625	39 (53)	59 (80)	71 (96)	107 (145)	115 (156)	173 (235)
LTi	0.625	39 (53)	59 (80)	71 (96)	107 (145)	115 (156)	173 (235)
XLT-i	0.625	39 (53)	59 (80)	71 (96)	107 (145)	115 (156)	173 (235)
i17	7/8	113 (153)	170 (230)	141 (191)	212 (287)	330 (447)	495 (671)

Shaft-end play

Table 20: Shaft-end play

Use this table as a reference for shaft-end play values.

Frame	Double row bearing	Duplex bearing
STi inches (millimeters)	0.0011 (0.028) 0.0019 (0.048)	0.0007 (0.018) 0.0010 (0.025)
MTi inches (millimeters)	0.0013 (0.033) 0.0021 (0.053)	0.0009 (0.023) 0.0012 (0.030)

Frame	Double row bearing	Duplex bearing
LTi inches (millimeters)	Not applicable	0.0010 (0.025) 0.0015 (0.038)
XLT-i inches (millimeters)	0.0014 (0.036) 0.0023 (0.058)	0.0010 (0.025) 0.0015 (0.038)

Bearing types

Table 21: Bearing types

Frame Double row	Inboard bearing Duplex	Outboard bearing	
STi	6207	3306	7306
MTi	6309	3309	7309
LTi	6311	Not applicable	7310
XLT-i, i17	6313	3313	7313

Spare parts

Always state the serial number and indicate the part name and item number from the relevant sectional drawing when you order spare parts. It is imperative for service reliability to have a sufficient stock of readily available spare parts.

- Impeller (101)
- Shaft (122A)
- Shaft sleeve (126)
- Outboard bearing (112A)
- Inboard bearing (168A)
- Casing gasket (351)
- Frame-to-adapter gasket (360D)
- Bearing-housing retaining ring (361A)
- Bearing lockwasher (382)
- Bearing locknut (136)
- Impeller O-ring (412A)
- Bearing-housing O-ring (496)
- Outboard labyrinth-seal rotary O-ring (497F)
- Outboard labyrinth-seal stationary O-ring (497G)
- Inboard labyrinth-seal rotary O-ring (497H)
- Inboard labyrinth-seal stationary O-ring (497J)
- Lantern ring half (105) (packed stuffing box)
- Stuffing box packing (106) (packed stuffing box)
- Packing gland (107) (packed stuffing box)
- Impeller gasket (428D) (XLT-i and i17 only)

Interchangeability drawings

3196 interchangeability

Table 22: 3196 interchangeability drawing

Description	Shaft and Bearing Frame Assembly	Adapter	Seal Chamber	Impeller	Casing	Size
Model 3196 STi 1–3/8 in. Shaft Dia. Max BHP-40 HP	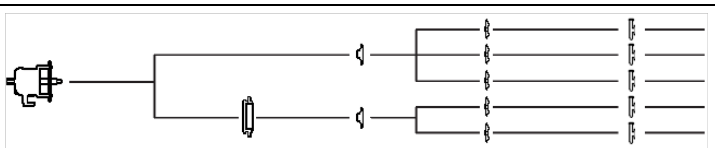					1x1.5-6 A 1.5x3-6 A 2x3-6 AC 1X1.5-8 A 1.5X3-8 A

Description	Shaft and Bearing Frame Assembly	Adapter	Seal Chamber	Impeller	Casing	Size
Model 3196 MTi 1–3/4 in. Shaft Dia. Max BHP-122 HP	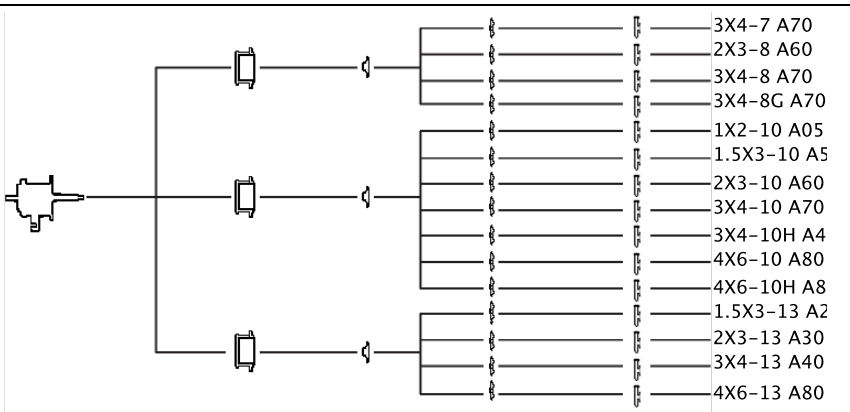					3X4-7 A70 2X3-8 A60 3X4-8 A70 3X4-8G A70 1X2-10 A05 1.5X3-10 A5 2X3-10 A60 3X4-10 A70 3X4-10H A4 4X6-10 A80 4X6-10H A8 1.5X3-13 A2 2X3-13 A30 3X4-13 A40 4X6-13 A80
Model 3196 LTi 2–1/8 in. Shaft Dia. Max BHP-200 HP	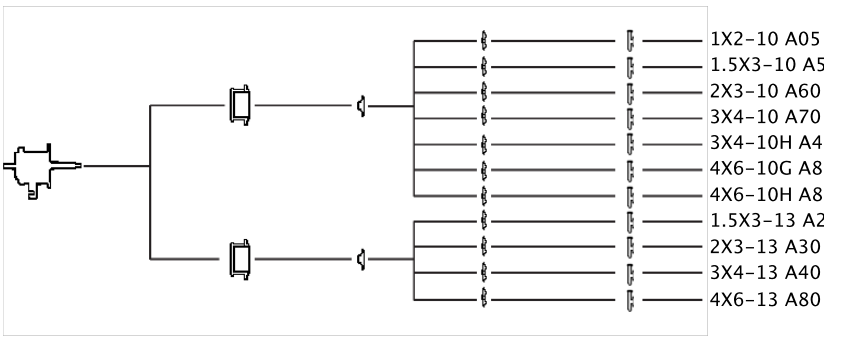					1X2-10 A05 1.5X3-10 A5 2X3-10 A60 3X4-10 A70 3X4-10H A4 4X6-10G A8 4X6-10H A8 1.5X3-13 A2 2X3-13 A30 3X4-13 A40 4X6-13 A80
Model 3196 XLT-i 2–1/2 in. Shaft Dia. Max BHP-250 HP 17 in. XLT-i has 2–3/4 in. Shaft Dia. Max BHP-350 HP	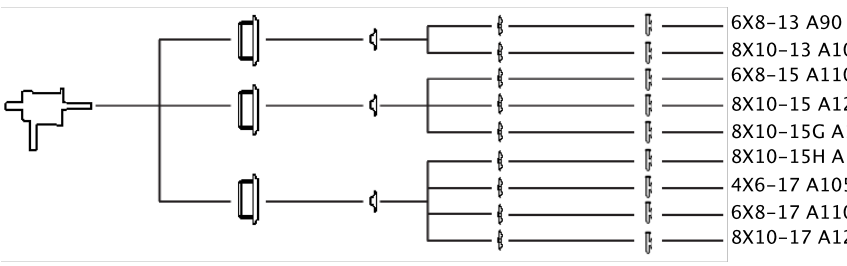					6X8-13 A90 8X10-13 A100 6X8-15 A110 8X10-15 A120 8X10-15G A12 8X10-15H A12 4X6-17 A105 6X8-17 A110 8X10-17 A120

Lubrication conversion

Frame lubrication conversion

NOTICE:

- Never mix greases of different consistencies (NLGI 1 or 3 with NLGI 2) or with different thickeners. For example, never mix a lithium-based grease with a polyurea-based grease. Doing so may result in decreased performance.
- Remove the bearings and old grease if you need to change the grease type or consistency. Failure to do so may result in equipment damage or decreased performance.

Use a grease that is suitable for high temperatures when you have frame pumpage temperatures greater than 350°F (177°C). Ensure that mineral-oil greases have oxidation stabilizers and a consistency of NLGI 3.

Table 23: Lubricating-grease requirements

Most pumps use Sunoco 2EP grease. High temperature units with a pumpage temperature greater than 350° F (177°C) use Mobil SCH32.

This table shows which brand of grease to use when lubricating the pump.

	Pumpage temperature less than 350°F (177°C)	Pumpage temperature greater than 350°F (177°C)
NGLI consistency	2	3
Mobil	Mobilux EP2	SCH32
Exxon	Unirex N2	Unirex N3
Sunoco	Mutipurpose 2EP	N/A
SKF	LGMT 2	LGMT 3

Convert from greased-for-life or regreaseable to oil-lubricated bearings

1. Remove the plug from the oil-return slot in the frame located under the radial bearing. Use this table as a guide.

Pump model	Action
STi	Remove the epoxy from the return slot.
MTi, LTi, XLT-i, and i-17	Remove the set screw installed in the oil-return hole.

2. Remove the plug from the oil-return hole in the bearing housing (134).
3. Replace both bearings with unshielded, oil-lubricated bearings.

Table 24: Bearing types

Frame Double row	Inboard bearing Duplex	Outboard bearing	
STi	6207	3306	7306
MTi	6309	3309	7309
LTi	6311	Not applicable	7310
XLT-i, i17	6313	3313	7313

4. Remove the grease fittings (193) to prevent accidental greasing. Two plugs (408H) are required to replace the two grease fittings.

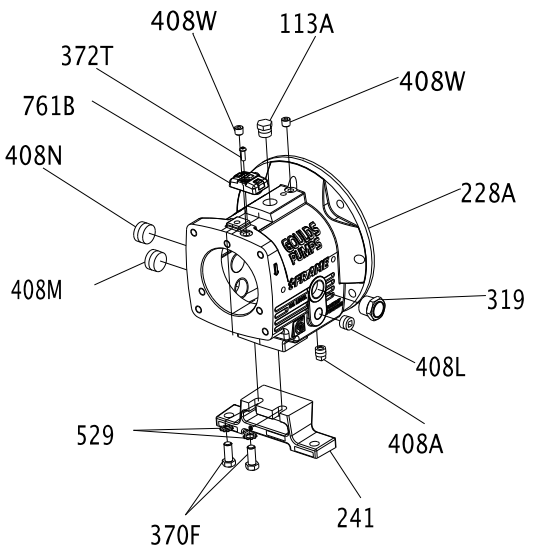

Item Number	Size	Description	Quantity
113	1/4"-18 NPT	External hex/square head pipe plug	2
113A	1/2"-14 NPT	External hex/square head pipe plug	1
193	1/4"-18 NPT	Grease fitting	2
228	- - - -	Bearing frame	1
241	- - - -	Frame foot	1
370F	1/2"	Hex cap screw	2
408A	3/8"-18 NPT	External square head pipe plug (magnetic)	1

Item Number	Size	Description	Quantity
408J	1/4"-18 NPT	External hex/square head pipe plug	1
408L	1/2"-14 NPT	Square countersunk headless pipe plug	1
408M	1" 11-1/2" NPT	Square countersunk headless pipe plug	1
529	1/2"	Light helical spring lock washer	2

Conversion from flood-oil to pure-oil mist

Consult your local ITT representative for further information on this topic.

Convert from flood oil to regreaseable

Consult your local ITT representative for further information on this topic.

Troubleshooting

Operation troubleshooting

Symptom	Cause	Remedy
The pump is not delivering liquid.	The pump is not primed.	Re-prime the pump and check that the pump and suction line are full of liquid.
	The suction line is clogged.	Remove the obstructions.
	The impeller is clogged.	Back-flush the pump in order to clean the impeller.
	The shaft is rotating in the wrong direction.	Change the rotation. The rotation must match the arrow on the bearing housing or pump casing.
	The foot valve or suction pipe opening is not submerged enough.	Consult an ITT representative for the proper submersion depth. Use a baffle in order to eliminate vortices.
	The suction lift is too high.	Shorten the suction pipe.
The pump is not producing the rated flow or head.	The gasket or O-ring has an air leak.	Replace the gasket or O-ring.
	The stuffing box has an air leak.	Replace or readjust the mechanical seal.
	The impeller is partly clogged.	Back-flush the pump in order to clean the impeller.
	The clearance between the impeller and the pump casing is excessive.	Adjust the impeller clearance.
	The suction head is not sufficient.	Make sure that the suction-line shutoff valve is fully open and that the line is unobstructed.
	The impeller is worn or broken.	Inspect and replace the impeller if necessary.
The pump starts and then stops pumping.	The pump is not primed.	Re-prime the pump and check that the pump and suction line are full of liquid.
	The suction line has air or vapor pockets.	Rearrange the piping in order to eliminate air pockets.
	The suction line has an air leak.	Repair the leak.
The bearings are running hot.	The pump and driver are not aligned properly.	Realign the pump and driver.
	There is not sufficient lubrication.	Check the lubricant for suitability and level.
	The lubrication was not cooled properly.	Check the cooling system.
The pump is noisy or vibrates.	The pump and driver are not aligned properly.	Realign the pump and driver.
	The impeller is partly clogged.	Back-flush the pump in order to clean the impeller.
	The impeller or shaft is broken or bent.	Replace the impeller or shaft as necessary.
	The foundation is not rigid.	Tighten the hold-down bolts of the pump and motor. Make sure the baseplate is properly grouted without voids or air pockets.
	The bearings are worn.	Replace the bearings.
	The suction or discharge piping is not anchored or properly supported.	Anchor the suction or discharge piping as necessary according to recommendations in the Hydraulic Institute Standards Manual.
	The pump is cavitating.	Locate and correct the system problem.
The mechanical seal is leaking excessively.	The packing gland is not adjusted properly.	Tighten the gland nuts.
	The stuffing box is not packed properly.	Check the packing and repack the box.
	The mechanical seal parts are worn.	Replace the worn parts.
	The mechanical seal is overheating.	Check the lubrication and cooling lines.
	The shaft sleeve is scored.	Machine or replace the shaft sleeve as necessary.
The motor requires excessive power.	The discharge head has dropped below the rated point and is pumping too much liquid.	Install a throttle valve. If this does not help, then trim the impeller diameter. If this does not help, then contact your ITT representative.
	The liquid is heavier than expected.	Check the specific gravity and viscosity.
	The stuffing-box packing is too tight.	Readjust the packing. If the packing is worn, then replace the packing.
	Rotating parts are rubbing against each other.	Check the parts that are wearing for proper clearances.
	The impeller clearance is too tight.	Adjust the impeller clearance.

Alignment troubleshooting

Symptom	Cause	Remedy
Horizontal (side-to-side) alignment cannot be obtained (angular or parallel).	The driver feet are bolt-bound.	Loosen the pump's hold-down bolts, and slide the pump and driver until you achieve horizontal alignment.
	The baseplate is not leveled properly and is probably twisted.	1. Determine which corners of the baseplate are high or low. 2. Remove or add shims at the appropriate corners. 3. Realign the pump and driver.

Assembly troubleshooting

Symptom	Cause	Remedy
There is excessive shaft end play.	The internal clearance of the bearings exceeds the recommended amount.	Replace the bearings with a bearing of the correct type.
	The snap ring is loose in the bearing-housing groove.	Re-seat the snap ring.
There is excessive shaft and sleeve runout.	The sleeve is worn.	Replace the sleeve.
	The shaft is bent.	Replace the shaft.
There is excessive bearing-frame flange runout.	The shaft is bent.	Replace the shaft.
	The flange of the bearing frame is distorted.	Replace the bearing-frame flange.
There is excessive frame-adapter runout.	There is corrosion on the frame adapter.	Replace the frame adapter.
	The adapter-to-frame gasket is not seated properly.	Re-seat the frame adapter and make sure that the adapter-to-frame gasket is seated properly.
There is excessive seal chamber or stuffing-box cover runout.	The seal chamber or the stuffing-box cover is not properly seated in the frame adapter.	Re-seat the seal chamber or stuffing-box cover.
	There is corrosion or wear on the seal chamber or stuffing-box cover.	Replace the seal chamber or stuffing-box cover.
There is excessive vane-tip runout of the impeller.	The vane is bent.	Replace the impeller.

i-ALERT™ Condition Monitor troubleshooting

Symptom	Cause	Remedy
There are no green or red flashing LEDs.	The battery is dead.	Replace the condition monitor.
	The unit is deactivated.	Activate the condition monitor.
	The unit is malfunctioning.	Consult your ITT representative for a warranty replacement.
The red LEDs are flashing, but the temperature and vibration are at acceptable levels.	The baseline is bad.	Check the temperature and vibration levels and reset the condition monitor.
	The unit is malfunctioning.	Consult your ITT representative for a warranty replacement.

Parts Listings and Cross-Sectionals

Parts list

Table 25: Construction material and quantity

Item	Quantity	Part name	Pump Material				
			All D.I.	D.I. With 316 SS impeller	All 316SS	All CD4MCu	All Alloy 20
100	1	Casing	1012	1012	1203	1216	1204
101	1	Impeller	1013	1203	1203	1216	1204
105	1	Lantern Ring	Teflon				
106	1 set	Stuffing Box Packing	Non-asbestos braid				
107	1	Gland—Packed Box	1203			1204	
108	1	Frame Adapter	1013				
109C	1***	Outboard Bearing End Cover	1001				
112A	1	Outboard Bearing	Double row angular contact (duplex pair for LTi)				
113	2	Plug—Grease Relief	2210				
113B	1	Plug—Oil Fill	2210				
122	1	Shaft—Without Sleeve	2229			2230	
122	1	Shaft—With Sleeve	2238				
126	1	Shaft Sleeve	2229				2230
134	1	Bearing Housing	1001				
136	1	Bearing Locknut	Steel				
168A	1	Radial Bearing	Single row ball				
184	1	Seal Chamber/Stuffing Box Cover	1012	1012	1203	1216	1204
193	2	Grease Fitting	Steel				
228	1	Bearing Frame	STi 1013, All others - 1001				
236A	10	Cap Screw—Bearing Clamp Ring	2210				
239	1	Support, Casing	–	–	2201*	2201*	2201*
241	1	Frame Foot	1001				
248	1	Oil Thrower	2210				
250	1	Gland—Mechanical Seal	Material varies				
253B	1	Bearing Clamp Ring	2210				
319	1	Sight Glass	Glass/steel				
332A	1	Outboard Labyrinth Seal w/O-rings	Brass ASTM B505-96				
333A	1	Inboard Labyrinth Seal w/O-rings	Brass ASTM B505-96				
351	1	Casing Gasket	Aramid fiber w/EPDM				
353	4	Gland Stud	2228				
355	4	Gland Stud Nut	2228				
358	1	Plug—Casing Drain	2210		2229	2230	
358Y	1 ***	Plug, Impeller	2229			2230	
360C	1 ***	Gasket—Thrust End Cover	Buna				
360D	1	Gasket—Frame-to-Adapter	Buna				
360Q	1	Gasket—Gland-to-Stuffing Box Cover	Material varies				
361A	1	Retaining Ring	Steel				
370	****	Bolt—Adapter to Case	2210		2228		
370B	4	Bolt—Frame-to-Adapter	2210				
370C	**	Clamp Bolt —Bearing Housing	2210				
370D	**	Jack Bolt—Bearing Housing	2210				
370F	2	Bolt—Frame Foot to Frame	2210				
370H	2	Stud—Stuffing Box Cover-to-Adapter	2228				
370Y	2	Bolt—Cap Casing to Support	–	–	2210*		
371C	6 ***	Cap Screw-End Cover to Bearing Housing	2210				
382	1	Bearing Lockwasher	Steel				
383	1	Mechanical Seal	Material varies				
400	1	Coupling Key	2210				

Item	Quantity	Part name	Pump Material				
			All D.I.	D.I. With 316 SS impeller	All 316SS	All CD4MCu	All Alloy 20
408A	1	Plug—Oil Drane	2210				
408H	4	Plug—Oil Mist Connection	2210				
408J	1	Plug—Oiler	2210				
408L	1	Plug—Oil Cooler Inlet	2210				
408M	1	Plug—Oil Cooler Outlet	2210				
408N	1	Plug—Sight Glass	2210				
412A	1	O-Ring, Graphoil Impeller	–	–	*		
418	3	Jack Bolt—Adapter-to-Case	2228				
423	3	Jam Nut—Bearing Housing Jack Bolt	2210				
423B	2	Hex Nut—Stuffing Box Cover to Adapter	2228				
428	1	Gasket, Plug	Teflon				
437	1	Lockwasher, Casing to Support	–	–	2210*		
458Y	1 ***	Plug, Impeller	2229			2230	
469B	2	Dowel Pin—Frame-to-Adapter	Steel				
494	1	Tube Element, Finned Cooled	304SS / Copper				
496	1	O-Ring Bearing Housing	Buna N				
412A	1	O-Ring—Impeller	Viton				
497F	1	O-Ring—Outboard Labyrinth Rotor	Viton				
497G	1	O-Ring—Outboard Labyrinth Stator	Viton				
497H	1	O-Ring—Inboard Labyrinth Rotor	Viton				
497J	1	O-Ring—Inboard Laybrinth Stator	Viton				
497L	1	O-Ring Internal (inboard)	Viton				
497N	1	O-Ring Internal (outboard)	Viton				
503	1	Adapter Ring	1013				
529	1	Lockwasher—Frame Foot-to-Bearing Frame	Steel				
555	1	Tube, Finned Cooling Assembly	304AA / Copper				
555A	1	Tube, Ftg Male (Frame Cooling)	Brass				
555B	2	Connector, Thermocouple (Frame Cooling)	Brass				
555C	2	Elbow, Female (Frame Cooling)	Brass				
555D	1	Conn TC Sealed PWR	Cast iron				
761B	1	i-ALERT™ Condition Monitor	Stainless steel/epoxy				

Table 26: Construction material and quantity (continued)

Item	Quantity	Part name	Pump Material				
			All 317SS	All Monel	All Nickel	All Hastelloy C	All Hastelloy B
100	1	Casing	1209	1119	1601	1215	1217
101	1	Impeller	1209	1119	1601	1215	1217
105	1	Lantern Ring	Teflon				
106	1 set	Stuffing Box Packing	Non-asbestos braid				
107	1	Gland—Packed Box	1209	1119	1601	1215	1217
108	1	Frame Adapter	1013				
109C	1***	Outboard Bearing End Cover	1001				
112A	1	Outboard Bearing	Double row angular contact (duplex pair for LTi)				
113	2	Plug—Grease Relief	2210				
113B	1	Plug—Oil Fill	2210				
122	1	Shaft—Less Sleeve	2232	2150	2155	2248	2247
122	1	Shaft—With Sleeve	2229				
126	1	Shaft Sleeve	2232	2150	2155	2248	2247
134	1	Bearing Housing	1001				
136	1	Bearing Locknut	Steel				
168A	1	Radial Bearing	Single row ball				
184	1	Seal Chamber/Stuffing Box Cover	1209	1119	1601	1215	1217
193	2	Grease Fitting	Steel				

Item	Quantity	Part name	Pump Material				
			All 317SS	All Monel	All Nickel	All Hastelloy C	All Hastelloy B
228	1	Bearing Frame	STi-1013, All others - 1001				
236A	10	Cap Screw—Bearing Clamp Ring	2210				
239	1	Support, Casing	–	–	–	2201*	–
241	1	Frame Foot	1001				
248	1	Oil Thrower	2210				
250	1	Gland—Mechanical Seal	Material varies				
253B	1	Bearing Clamp Ring	2210				
319	1	Sight Glass	Glass/steel				
332A	1	Outboard Labyrinth Seal w/O-rings	Brass ASTM B505-96				
333A	1	Inboard Labyrinth Seal w/O-rings	Brass ASTM B505-96				
351	1	Casing Gasket	Aramid fiber w/EPDM				
353	4	Gland Stud	2232	2150	2155	2248	2247
355	4	Gland Stud Nut	2232	2150	2155	2248	2247
358	1	Plug—Casing Drain	2232	2150	2156	2248	2247
358Y	1 ***	Plug, Impeller	2232	2150	2156	2248	2156
360C	1 ***	Gasket—Thrust End Cover	Buna				
360D	1	Gasket—Frame-to-Adapter	Buna				
360Q	1	Gasket—Gland-to-Stuffing Box Cover	Material varies				
361A	1	Retaining Ring	Steel				
370	****	Bolt—Adapter to Case	2228				
370B	4	Bolt—Frame-to-Adapter	2210				
370C	**	Clamp Bolt —Bearing Housing	2210				
370D	**	Jack Bolt—Bearing Housing	2210				
370F	2	Bolt—Frame Foot to Frame	2210				
370H	2	Stud—Stuffing Box Cover-to-Adapter	2228				
370H	2	Bolt—Cap Casing to Support	–	–	–	2210*	–
371C	6 ***	Cap Screw-End Cover to Bearing Housing	2210				
382	1	Bearing Lockwasher	Steel				
383	1	Mechanical Seal	Material varies				
400	1	Coupling Key	2210				
408A	1	Plug—Oil Drane	2210				
408H	4	Plug—Oil Mist Connection	2210				
408J	1	Plug—Oiler	2210				
408L	1	Plug—Oil Cooler Inlet	2210				
408M	1	Plug—Oil Cooler Outlet	2210				
408N	1	Plug—Sight Glass	2210				
412A	1	O-Ring, Graphoil Impeller	–	–	–	*	–
418	3	Jack Bolt—Adapter-to-Case	2228				
423	3	Jam Nut—Bearing Housing Jack Bolt	2210				
423B	2	Hex Nut—Stuffing Box Cover to Adapter	2228				
428	1	Gasket, Plug	Teflon				
437	1	Lockwasher, Casing to Support	–	–	–	2210*	–
458Y	1***	Plug, Impeller	2232	2150	2155	2248	2247
469B	2	Dowel Pin—Frame-to-Adapter	Steel				
494	1	Tube Element, Finned Cooled	304SS / Copper				
496	1	O-Ring Bearing Housing	Buna N				
412A	1	O-Ring—Impeller	Viton				
497F	1	O-Ring—Outboard Labyrinth Rotor	Viton				
497G	1	O-Ring—Outboard Labyrinth Stator	Viton				
497H	1	O-Ring—Inboard Labyrinth Rotor	Viton				
497J	1	O-Ring—Inboard Laybrinth Stator	Viton				
497L	1	O-Ring Internal (inboard)	Viton				
497N	1	O-Ring Internal (outboard)	Viton				
503	1	Adapter Ring	1013				

Item	Quantity	Part name	Pump Material				
			All 317SS	All Monel	All Nickel	All Hastelloy C	All Hastelloy B
529	1	Lockwasher—Frame Foot-to-Bearing Frame	Steel				
555	1	Tube, Finned Cooling Assembly	304AA / Copper				
555A	1	Tube, Ftg Male (Frame Cooling)	Brass				
555B	2	Connector, Thermocouple (Frame Cooling)	Brass				
555C	2	Elbow, Female (Frame Cooling)	Brass				
555D	1	Conn TC Sealed PWR	Cast iron				
761B	1	i-ALERT™ Condition Monitor	Stainless steel/epoxy				

Table 27: Construction material and quantity (continued)

Item	Quantity	Part name	Pump Material (3196, HT 3196, CV 3196, 3796)	Pump Material (NM 3196)	Pump Material (3198)
			All Titanium	Vinylester	D.I./Teflon
100	1	Casing	1220	6929	9639
101	1	Impeller	1220	6929	6944
105	1	Lantern Ring	Teflon	–	–
106	1 set	Stuffing Box Packing	Non-asbestos braid	–	–
107	1	Gland—Packed Box	1220	–	–
108	1	Frame Adapter	1013		
109C	1***	Outboard Bearing End Cover	1001		
112A	1	Outboard Bearing	Double row angluar contact (duplex pair for LTi)		
113	2	Plug—Grease Relief	2210		
113B	1	Plug—Oil Fill	2210		
122	1	Shaft—Less Sleeve	2156	2229	–
122	1	Shaft—With Sleeve	2229		6947
126	1	Shaft Sleeve	2156	2229	–
134	1	Bearing Housing	1001		
136	1	Bearing Locknut	Steel		
168A	1	Radial Bearing	Single row ball		
184	1	Seal Chamber/Stuffing Box Cover	1220	6929	9639
193	2	Grease Fitting	Steel		
228	1	Bearing Frame	STi - 1013, All others - 1001		
236A	10	Cap Screw—Bearing Clamp Ring	2210		
239	1	Support, Casing	–	–	–
241	1	Frame Foot	1001		
248	1	Oil Thrower	2210		
250	1	Gland—Mechanical Seal	Material varies		
253B	1	Bearing Clamp Ring	2210		
319	1	Sight Glass	Glass/steel		
332A	1	Outboard Labyrinth Seal w/O-rings	Brass ASTM B505-96		
333A	1	Inboard Labyrinth Seal w/O-rings	Brass ASTM B505-96		
351	1	Casing Gasket	Aramid fiber w/EPDM		
353	4	Gland Stud	2156	2229	2229
355	4	Gland Stud Nut	2156	2229	2229
358	1	Plug—Casing Drain	2156	–	–
358Y	1 ***	Plug, Impeller	2156	–	–
360C	1 ***	Gasket—Thrust End Cover	Buna		
360D	1	Gasket—Frame-to-Adapter	Buna		
360Q	1	Gasket—Gland-to-Stuffing Box Cover	Material varies		
361A	1	Retaining Ring	Steel		
370	****	Bolt—Adapter to Case	2228		
370B	4	Bolt—Frame-to-Adapter	2210		
370C	**	Clamp Bolt —Bearing Housing	2210		
370D	**l	Jack Bolt—Bearing Housing	2210		
370F	2	Bolt—Frame Foot to Frame	2210		

Item	Quantity	Part name	Pump Material (3196, HT 3196, CV 3196, 3796)	Pump Material (NM 3196)	Pump Material (3198)
			All Titanium	Vinylester	D.I./Teflon
370H	2	Stud—Stuffing Box Cover-to-Adapter	2228		
370Y	2	Bolt—Cap Casing to Support	–	–	–
371C	6 ***	Cap Screw-End Cover to Bearing Housing	2210		
382	1	Bearing Lockwasher	Steel		
383	1	Mechanical Seal	Material varies		
400	1	Coupling Key	2210		
408A	1	Plug—Oil Drane	2210		
408H	4	Plug—Oil Mist Connection	2210		
408J	1	Plug—Oiler	2210		
408L	1	Plug—Oil Cooler Inlet	2210		
408M	1	Plug—Oil Cooler Outlet	2210		
408N	1	Plug—Sight Glass	2210		
412A	1	O-Ring, Graphoil Impeller	–	–	–
418	3	Jack Bolt—Adapter-to-Case	2228		
423	3	Jam Nut—Bearing Housing Jack Bolt	2210		
423B	2	Hex Nut—Stuffing Box Cover to Adapter	2228		
428	1	Gasket, Plug	Teflon		
437	1	Lockwasher, Casing to Support	–	–	–
458Y	1 ***	Plug, Impeller	2156	–	–
469B	2	Dowel Pin—Frame-to-Adapter	Steel		
494	1	Tube Element, Finned Cooled	304SS / Copper		
496	1	O-Ring Bearing Housing	Buna N		
412A	1	O-Ring—Impeller	Viton		
497F	1	O-Ring—Outboard Labyrinth Rotor	Viton		
497G	1	O-Ring—Outboard Labyrinth Stator	Viton		
497H	1	O-Ring—Inboard Labyrinth Rotor	Viton		
497J	1	O-Ring—Inboard Laybrinth Stator	Viton		
497L	1	O-Ring Internal (inboard)	Viton		
497N	1	O-Ring Internal (outboard)	Viton		
503	1	Adapter Ring	1013		
529	1	Lockwasher—Frame Foot-to-Bearing Frame	Steel		
555	1	Tube, Finned Cooling Assembly	304AA / Copper		
555A	1	Tube, Ftg Male (Frame Cooling)	Brass		
555B	2	Connector, Thermocouple (Frame Cooling)	Brass		
555C	2	Elbow, Female (Frame Cooling)	Brass		
555D	1	Conn TC Sealed PWR	Cast iron		
761B	1	i-ALERT™ Condition Monitor	Stainless steel/epoxy		

Table 28: Key to table symbols

–	Not applicable
*	Only applicable for HT 3196
**	3 for STi, MTi, LTi 4 for XLT-i, i17
***	XLT-I and i17 only
****	4 for 6 in. STi 8 for 8 in. STi and MTi 16 for 13 in. MTi, LTi , XLT-I 24 for 15 in. XLT-I 12 for 10 in. MTi, LTi , i17

Table 29: Material-code reference

Material	Goulds material code	ASTM	Din	ISO	JIS
Cast Iron	1001	A48 CLASS 20			
Ductile Iron	1012	A395 Gr60-40-18			
Ductile Iron	1013	A536 Gr60-42-10			
CD4MCu	1041	A744 CD4MCU			
Monel	1119	A494 GrM-35-1			
316SS	1203	A744 CF-8M	1.4408		G5121 (SC514)
Alloy 20	1204	A744CN-7M	1.4500		
317SS	1209	A744CG-8M	1.4448		
Hastelloy C	1215	A494 CW-6M			
CD4MCu	1216	A744CD4MCU	9.4460		
Hastelloy B	1217	A494 N-7M			
Titanium	1220	B367 GrC-3			
Nickel	1601	A494 GrCZ100			
Monel	2150	B164 UNS N04400			
Nickel	2155	B160 UNS N02200			
Titanium	2156	B348 Gr2			
Carbon Steel	2201	A576 Gr. 1018 and 1020			
Carbon Steel	2210	A108Gr1211			
304SS	2228	A276 Type 304			
316SS	2229	A276 Type 316			
Alloy 20	2230	B473 (N08020)			
317SS	2232	A276			
4150 Steel	2237	A322Gr4150			
4140 Steel	2238	A434Gr4140			
4140 Steel	2239	A193 Gr. B7			
Alloy B-2	2247	B335 (N10665)			
Alloy C-276	2248	B574 (N10276)			
GMP-2000	6929	N/A			
PFA Lined Steel	6944	N/A			
PFA Lined 316SS	6947	N/A			
PFA Lined Ductile Iron	9639	N/A			

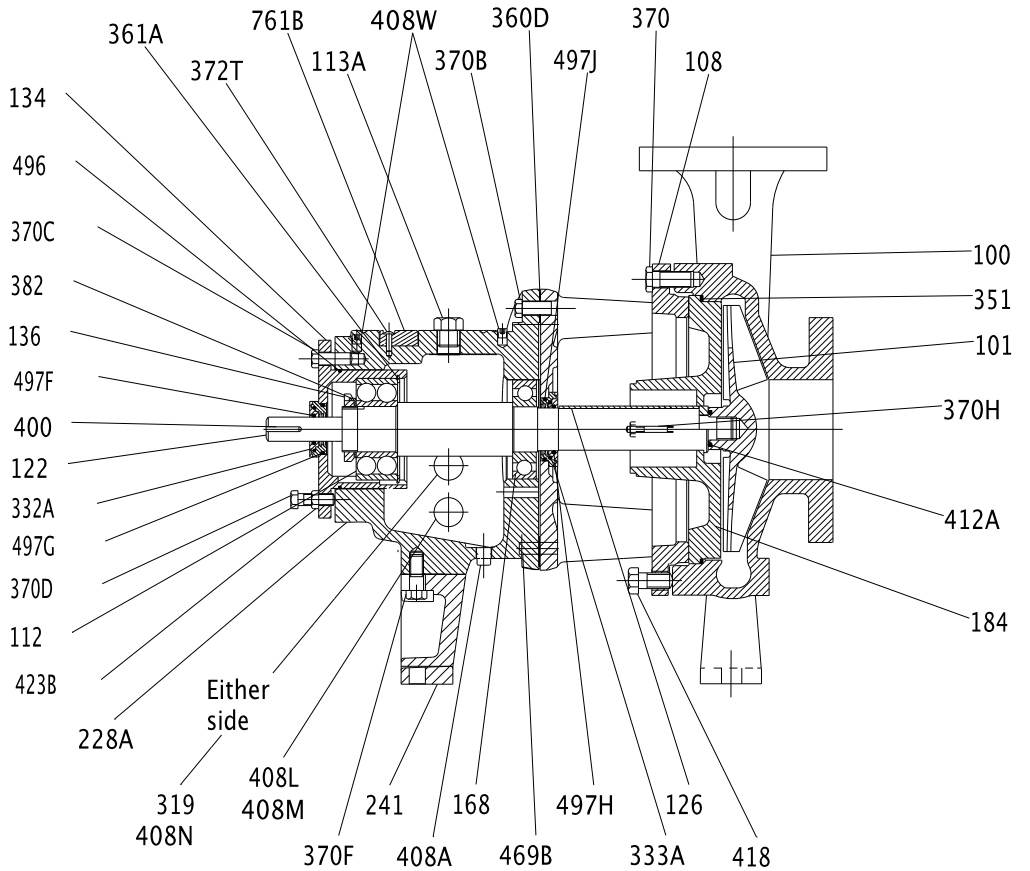

Figure 33: 3196 cross-sectional drawing

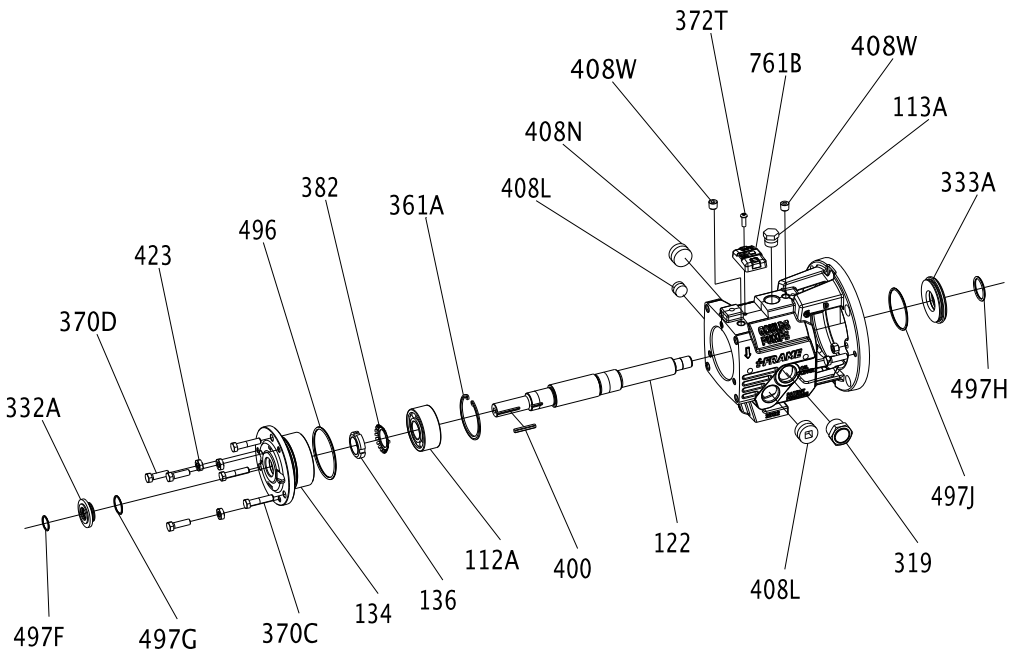

Figure 34: STi bearing-frame exploded view

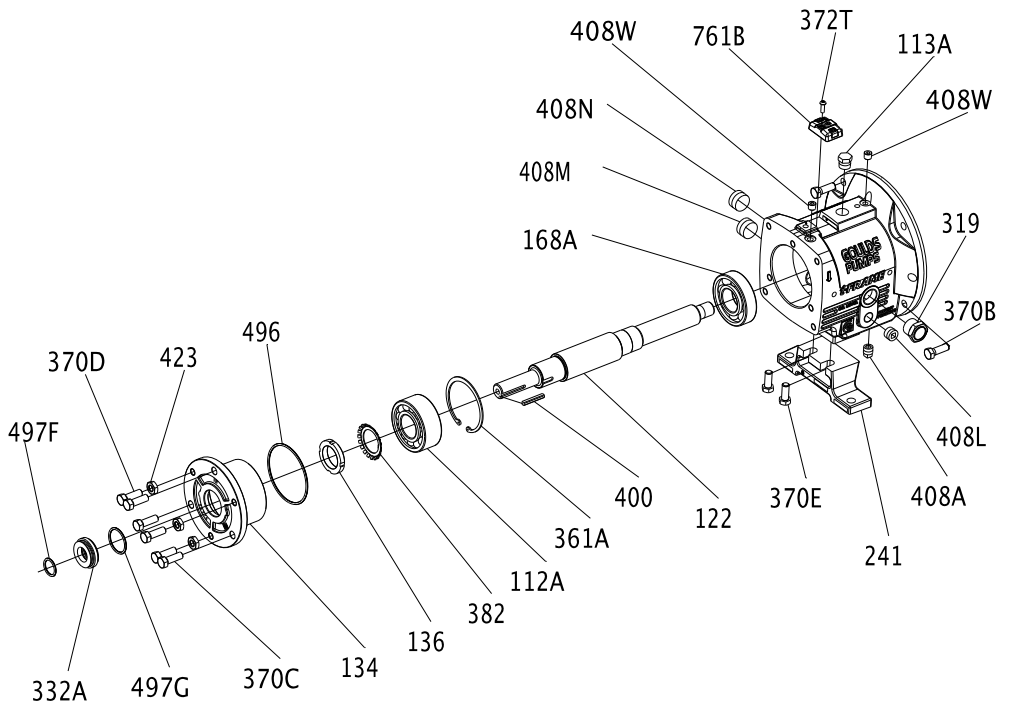

Figure 35: MTi bearing-frame exploded view

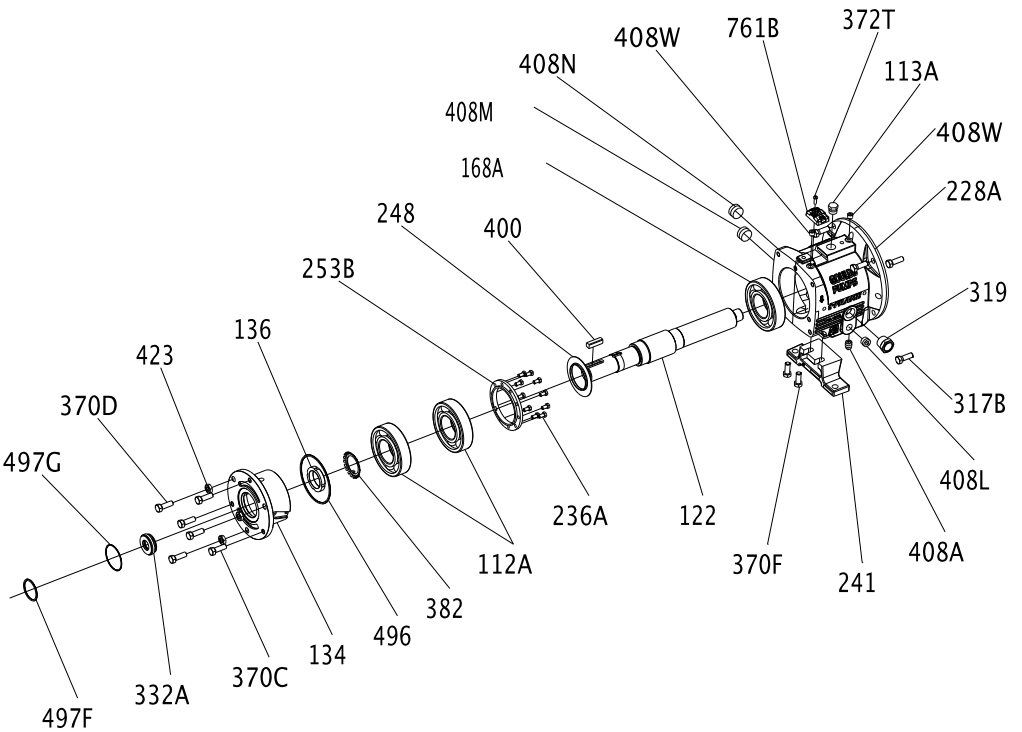

Figure 36: LTi bearing-frame exploded view

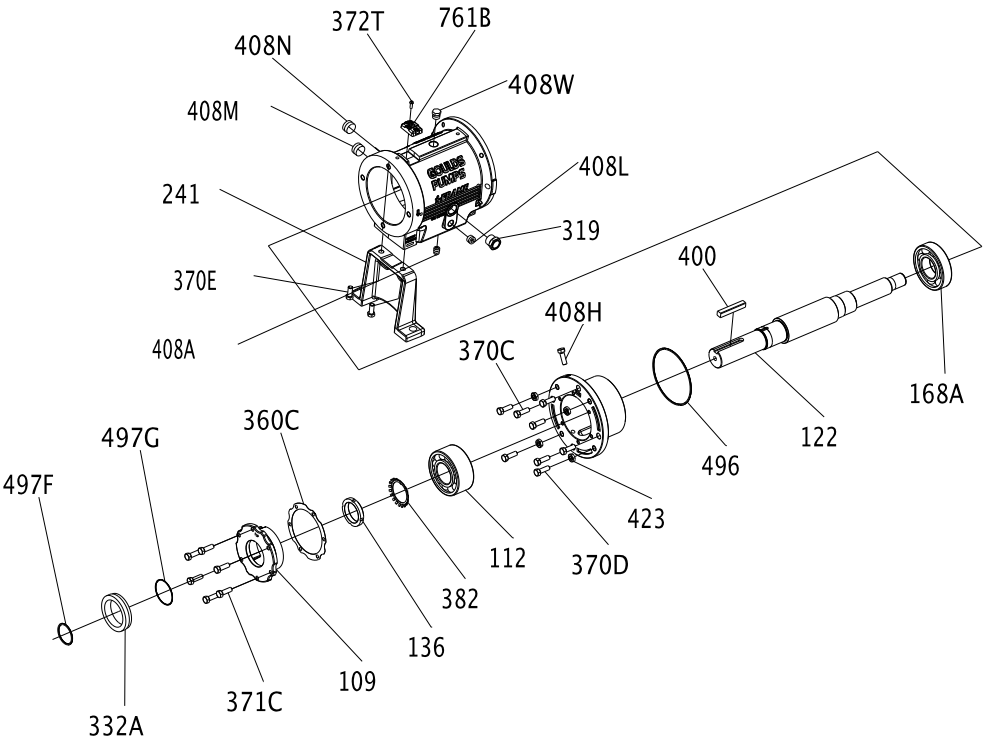

Figure 37: XLT-i bearing-frame exploded view

The finned-tube oil cooler is standard on HT 3196 and optional on all other models.

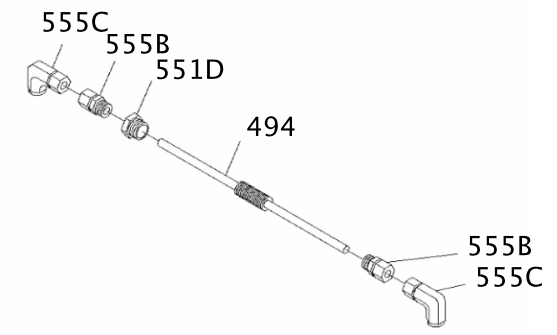

Figure 38: Finned-tube oil cooler exploded view

Certification: CE or CE ATEX

Certificates of conformance

CSA Certificate

CSA INTERNATIONAL

Certificate of Compliance

Certificate: 1992883 **Master Contract:** 236924

Project: 2254252 **Date Issued:** 2009/12/16

Issued to: **ITT Corporation**

240 Fall St
Seneca Falls, NY 13148
USA
Attention: Anthony Stavale

The products listed below are eligible to bear the CSA Mark shown with adjacent indicators 'C' and 'US' for Canada and US or with adjacent indicator 'US' for US only or without either indicator for Canada only.

C US

D. Simpson, Certifier

Issued by: D. Simpson, Certifier

PRODUCTS

CLASS 2258 03 - PROCESS CONTROL EQUIPMENT - Intrinsically Safe and Non - Incendive Systems - For Hazardous Locations

CLASS 2258 83 - PROCESS CONTROL EQUIPMENT-Intrinsically Safe and Non-Incendive - Systems-For Hazardous Locations-Certified to U.S. Standards

Class I, Division 1, Group A, B, C and D; Class II, Group E, F and G; Class III:

- Condition Monitor, Model LCCM, p/n C07667A, battery operated (non-replaceable, non-rechargeable), intrinsically safe, temperature code T4 (at max ambient of 100C).

APPLICABLE REQUIREMENTS

CAN/CSA-C22.2 No. 0-M91 - General Requirements – Canadian Electrical Code, Part II

CAN/CSA-C22.2 No.157-92 - Intrinsically Safe and Non-Incendive Equipment for Use in Hazardous Locations

UL Std No.913, Ed. 7 - Intrinsically Safe Apparatus and Associated Apparatus for Use in Class I, II and III, Division 1, Hazardous Locations

DQD 507 Rev. 2009-09-01

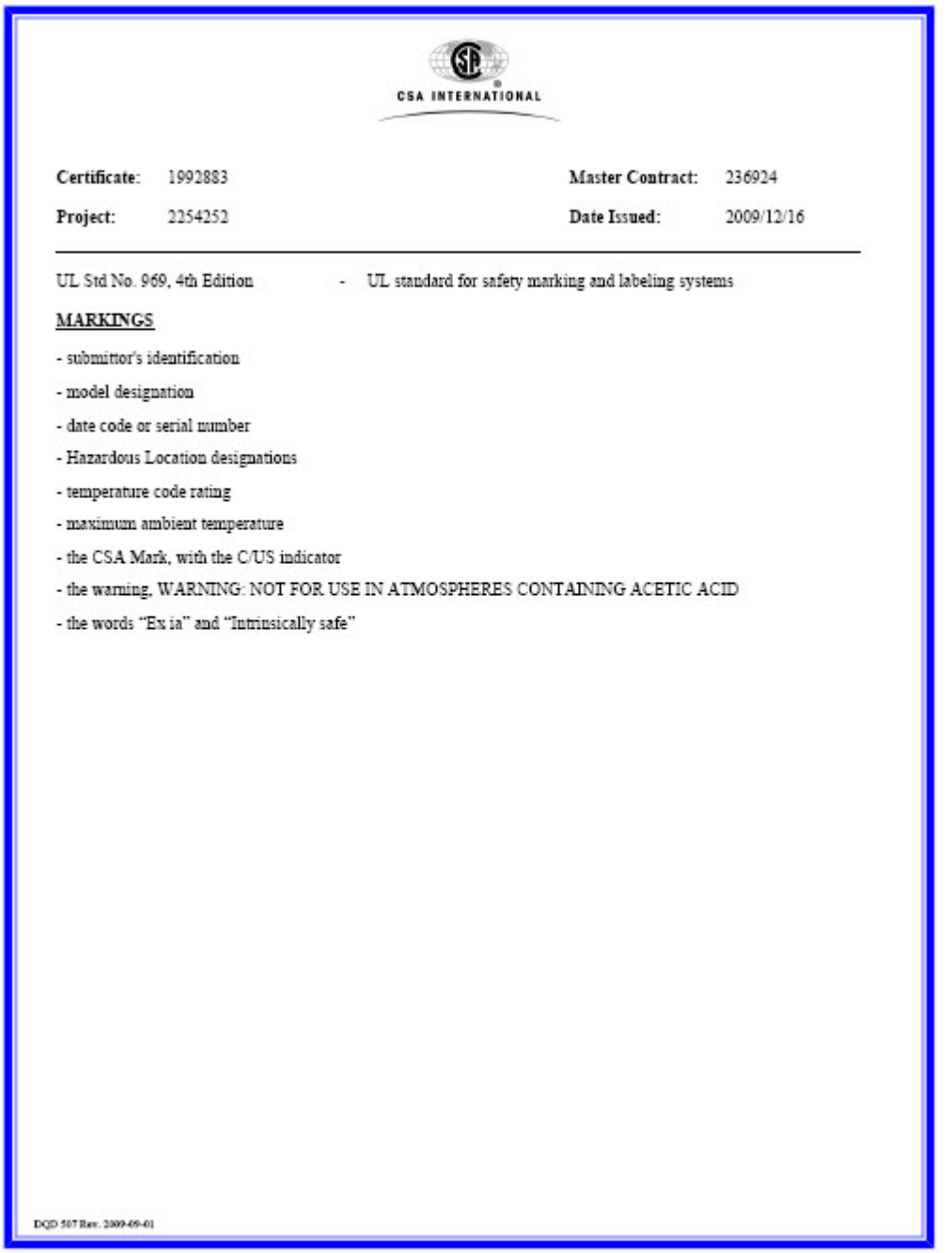

CSA INTERNATIONAL

Certificate: 1992883 **Master Contract:** 236924

Project: 2254252 **Date Issued:** 2009/12/16

UL Std No. 969, 4th Edition - UL standard for safety marking and labeling systems

MARKINGS

- submittor's identification
- model designation
- date code or serial number
- Hazardous Location designations
- temperature code rating
- maximum ambient temperature
- the CSA Mark, with the C/US indicator
- the warning, WARNING: NOT FOR USE IN ATMOSPHERES CONTAINING ACETIC ACID
- the words "Ex ia" and "Intrinsically safe"

DQD 507 Rev. 2009-09-01

ATEX notification

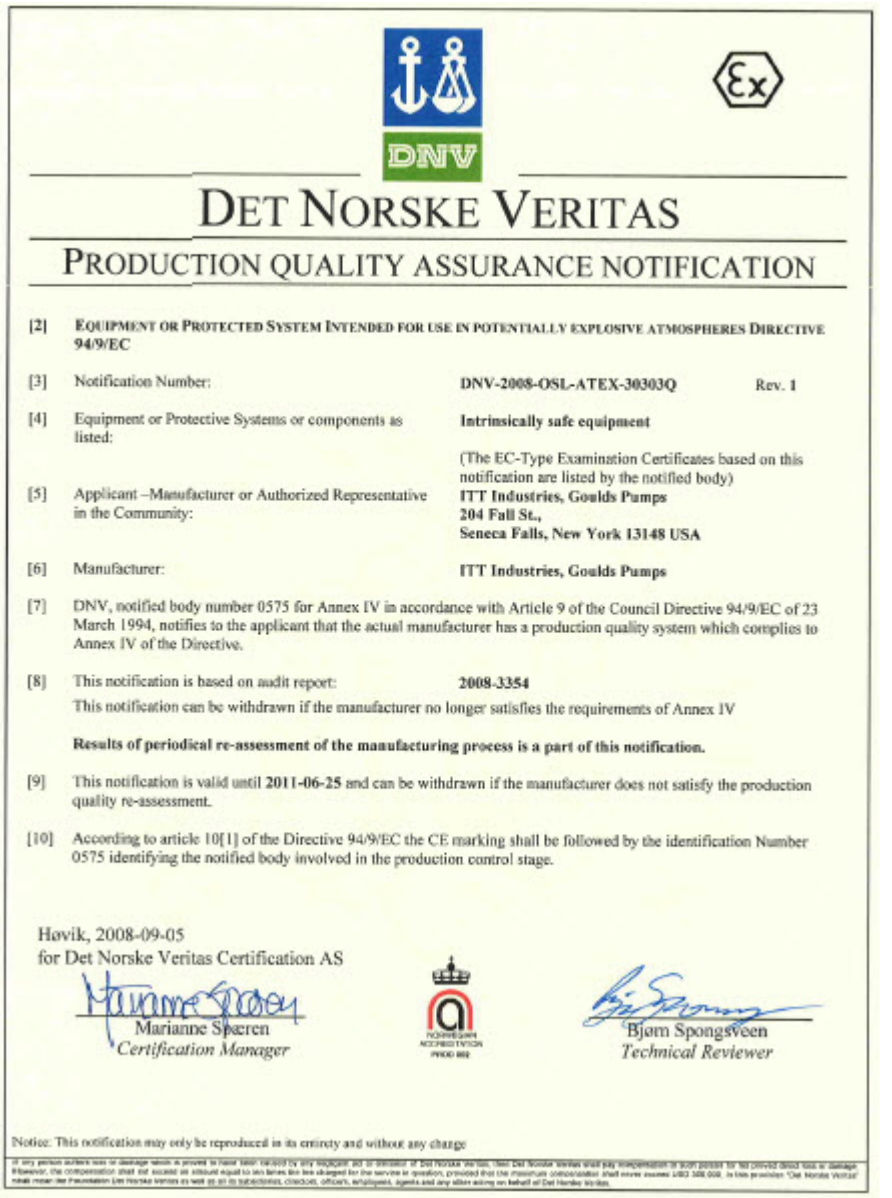

DET NORSKE VERITAS

PRODUCTION QUALITY ASSURANCE NOTIFICATION

[2] EQUIPMENT OR PROTECTED SYSTEM INTENDED FOR USE IN POTENTIALLY EXPLOSIVE ATMOSPHERES DIRECTIVE 94/9/EC

[3] Notification Number: **DNV-2008-OSL-ATEX-30303Q** Rev. 1

[4] Equipment or Protective Systems or components as listed: **Intrinsically safe equipment**

(The EC-Type Examination Certificates based on this notification are listed by the notified body)

[5] Applicant –Manufacturer or Authorized Representative in the Community: **ITT Industries, Goulds Pumps**
204 Fall St.,
Seneca Falls, New York 13148 USA

[6] Manufacturer: **ITT Industries, Goulds Pumps**

[7] DNV, notified body number 0575 for Annex IV in accordance with Article 9 of the Council Directive 94/9/EC of 23 March 1994, notifies to the applicant that the actual manufacturer has a production quality system which complies to Annex IV of the Directive.

[8] This notification is based on audit report: **2008-3354**
This notification can be withdrawn if the manufacturer no longer satisfies the requirements of Annex IV

Results of periodical re-assessment of the manufacturing process is a part of this notification.

[9] This notification is valid until **2011-06-25** and can be withdrawn if the manufacturer does not satisfy the production quality re-assessment.

[10] According to article 10[1] of the Directive 94/9/EC the CE marking shall be followed by the identification Number 0575 identifying the notified body involved in the production control stage.

Høvik, 2008-09-05
for Det Norske Veritas Certification AS

Marianne Sperren
Certification Manager

Bjørn Spongsveen
Technical Reviewer

Notice: This notification may only be reproduced in its entirety and without any change

IECEx Certificate of Conformity

IECEx Certificate of Conformity

INTERNATIONAL ELECTROTECHNICAL COMMISSION
IEC Certification Scheme for Explosive Atmospheres
for rules and details of the IECEx Scheme visit www.iecex.com

Certificate No.: IECEx LCI 08.0038 Issue No.:0 Certificate history:

Status: Current

Date of Issue: 2008-09-16 Page 1 of 3

Applicant:
ITT Corp.
Goulds pumps
240 Fall Street
Seneca Falls, NY 13148
United States of America

Electrical Apparatus: **Condition Monitor**
Optional accessory:

Type of Protection: **ia**

Marking:
ITT Corp.
Goulds pumps
240 Fall Street
Seneca Falls, NY 13148
U.S.A.
Condition Monitor
Type : LCCM, p/n C07667A
Ex ia IIC T4
Tamb : -40°C à 100°C

Approved for issue on behalf of the IECEx Certification Body: Marc Gillaux

Position: Ex Certification Manager

Signature: (for printed version)

Date: le 16 Septembre 2008

1. This certificate and schedule may only be reproduced in full.
2. This certificate is not transferable and remains the property of the issuing body.
3. The Status and authenticity of this certificate may be verified by visiting the Official IECEx Website.

Certificate issued by:

Laboratoire Central des Industries Electriques (LCIE)
33 Avenue du General Leclerc
FR-92260 Fontenay-aux-Roses
France

IECEx Certificate of Conformity

Certificate No.: IECEx LCI 08.0038

Date of Issue: 2008-09-16 Issue No.: 0

Page 2 of 3

Manufacturer: **ITT Corp.**
Goulds pumps
240 Fall Street
Seneca Falls, NY 13148
United States of America

Manufacturing location(s):

This certificate is issued as verification that a sample(s), representative of production, was assessed and tested and found to comply with the IEC Standard list below and that the manufacturer's quality system, relating to the Ex products covered by this certificate, was assessed and found to comply with the IECEx Quality system requirements. This certificate is granted subject to the conditions as set out in IECEx Scheme Rules, IECEx 02 and Operational Documents as amended.

STANDARDS:
The electrical apparatus and any acceptable variations to it specified in the schedule of this certificate and the identified documents, was found to comply with the following standards:

IEC 60079-0 : 2004 Edition: 4.0	Electrical apparatus for explosive gas atmospheres - Part 0: General requirements
IEC 60079-11 : 2006 Edition: 5	Explosive atmospheres - Part 11: Equipment protection by intrinsic safety "i"

*This Certificate **does not** indicate compliance with electrical safety and performance requirements other than those expressly included in the Standards listed above.*

TEST & ASSESSMENT REPORTS:
A sample(s) of the equipment listed has successfully met the examination and test requirements as recorded in

Test Report:

FR/LCI/ExTR08.0043/00

Quality Assessment Report:
NO/DNV/QAR08.0006/00

Chinese Certificate of Conformity

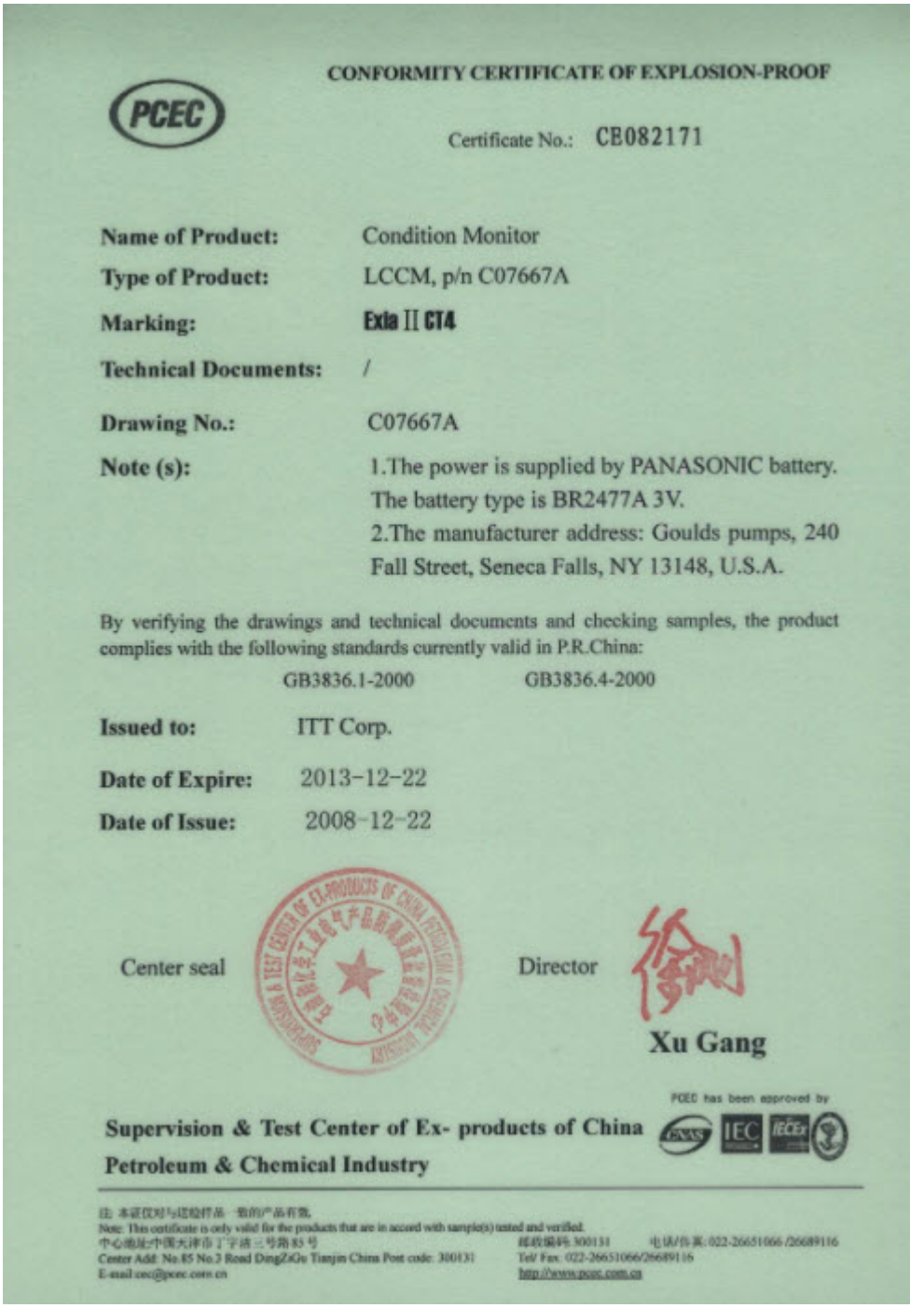

CONFORMITY CERTIFICATE OF EXPLOSION-PROOF

PCEC

Certificate No.: CB082171

Name of Product: Condition Monitor

Type of Product: LCCM, p/n C07667A

Marking: Exia II CT4

Technical Documents: /

Drawing No.: C07667A

Note (s): 1.The power is supplied by PANASONIC battery. The battery type is BR2477A 3V.
2.The manufacturer address: Goulds pumps, 240 Fall Street, Seneca Falls, NY 13148, U.S.A.

By verifying the drawings and technical documents and checking samples, the product complies with the following standards currently valid in P.R.China:

GB3836.1-2000 GB3836.4-2000

Issued to: ITT Corp.

Date of Expire: 2013-12-22

Date of Issue: 2008-12-22

Center seal

Director

Xu Gang

PCEC has been approved by

Supervision & Test Center of Ex- products of China Petroleum & Chemical Industry

Note: This certificate is only valid for the products that are in accord with sample(s) tested and verified.
Center Add: No.85 No.3 Road DingZiGu Tianjin China Post code: 300131
Tel/ Fax: 022-26651066/26689116
E-mail:cec@pcec.com.cn
http://www.pcec.com.cn

Other Relevant Documentation or Manuals

For additional documentation

For any other relevant documentation or manuals, contact your ITT representative.

Local ITT Contacts

Regional offices

Region	Address	Telephone	Fax
North America (Headquarters)	ITT - Goulds Pumps 240 Fall Street Seneca Falls, NY 13148 USA	+1 315-568-2811	+1 315-568-2418
Asia Pacific	ITT Industrial Process 10 Jalan Kilang #06-01 Singapore 159410	+65 627-63693	+65 627-63685
Europe	ITT - Goulds Pumps Millwey Rise Industrial Estate Axminster, Devon, England EX13 5HU	+44 1297-630250	+44 1297-630256
Latin America	ITT - Goulds Pumps Camino La Colina # 1448 Condominio Industrial El Rosal Huechuraba Santiago 8580000 Chile	+562 544-7000	+562 544-7001
Middle East and Africa	ITT - Goulds Pumps Achileos Kyrou 4 Neo Psychiko 115 25 Athens Greece	+30 210-677-0770	+30 210-677-5642

Visit our website for the latest version of this document and more information:
http://www.gouldspumps.com

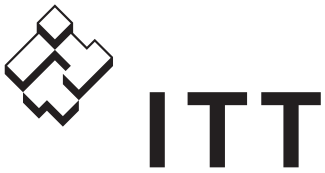

ENGINEERED FOR LIFE

240 Fall Street
Seneca Falls, NY 13148
USA
Tel. 1-800-446-8537
Fax (315) 568-2418

© 2014 ITT Corporation
The original instruction is in English. All non-English instructions are translations of the original instruction.

Form en-US.2014-07.IOM.3196.i-FRAME

PRO services

i-ALERT®2

Equipment Health Monitor

Bluetooth® SMART

ITT

ENGINEERED FOR LIFE

i-ALERT®2

What it Does:

Monitor
Tracks vibration, temperature & run-time hours 24/7/365.

Alarm
Checks every five minutes & alarms if equipment is outside normal operating conditions.

Trend
Stores data once per hour & on alarm for 30 days. Stores the weekly average, minimum & maximum up to 5 years.

Analyze
Diagnose machine faults with vibration tools Fast Fourier Transform (FFT) & Time Wave Form Analysis.

Environment
Rated for any industrial environment. IP67 water & dust resistant. Intrinsically Safe with a 3-year battery life (use dependent).

Wireless
Sync data via Bluetooth Smart enabled smartphones and tablets.

Spend less time collecting data and more time fixing problems. The *i-ALERT®2* mobile app has the ability to scan multiple *i-ALERT®2*s within range to quickly and safely inspect multiple machines.

How it Works:

1 ACTIVATE

The *i-ALERT devices* are light activated by removing the sticker. *i-ALERT®* begins wirelessly broadcasting once activated.

2 AUTO CONFIGURATION

i-ALERT2 averages the vibration over 25 hours of run-time and sets the alarm levels to 2 x average (0.08ips minimum). Temperature alarm default to 80°C (176°F).

OR

2 MANUAL CONFIGURATION

User manually sets the alarm thresholds via the *i-ALERT®* mobile application.

3 MONITOR

i-ALERT checks every 5 minutes. If two consecutive readings are above alarm threshold the *i-ALERT* will go into alarm.

Mounting Options:

Mill a slot

Drill & tap

Epoxy[1]

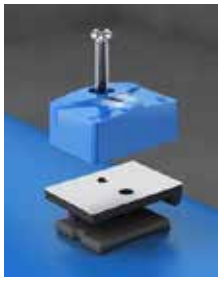

[1]Epoxy not included

Monitor, Alarm, Trend, Analyze

Dashboard

Simple, intuitive dashboard to track vibration, temperature, run-time & battery life.

Trending

Trend vibration, temperature, & kurtosis to monitor any changes in the equipment operation.

Advanced Tools

Download or request a Fast Fourier Transform (FFT) & Time Wave Form to perform vibration analysis.

Pump Performance Curve*

Load the pump performance curve based on the pump serial number.

Report Generator

Generate a machine health report and send the report via an email.

Service Locator

Locate and contact the nearest ITT Service Center.

* Currently available for select ITT Goulds Pumps models

Technical Specifications

Dimensions
- 57mm L x 39mm W x 25mm H
- 2.24in L x 1.54in W x 1.04in H

Measurements
- Temperature
- 3 Axis Vibration (RMS Velocity)
- Kurtosis
- Machine run-time counter
- Fast Fourier Transform (FFT)
- Time Waveform (TWF)

Sensors
- 3-axis accelerometer ±16g
- Frequency range:
  - axial - 10-1,000Hz
  - horizontal - 10-1,000Hz
  - radial - 10-600Hz
- FFT resolution: 1Hz/bin
- Temperature sensor -40°C to +150°C (-40°F to +302°F)

Memory
- x,y,z velocity rms, kurtosis, temperature
- Short term: 1/hour for 30 days
- Long term: weekly summary (min,max, average) for 5 years

Environment
- Ambient temperature: -40°C to +84°C (-40°F to +183°F)
- IP67 water and dust protected
- Intrinsically Safe
- Class I, II, III, Division 1 Groups C,D,E,F,G
- ATEX Zone 0 AEx ia IIB Ga (Groups C & D)
- RoHS, WEEE, REACH, CE, FCC

Battery & Power
- 3.6 V Lithium battery
- Life expectancy > 3 years (use dependent)

Materials
- Shell Material: Nylon 12
- Mounting Stud: 316ss

Display
- Green LED for unit ON
- Red LED for unit in ALARM
- Blue LED for Bluetooth radio transmitting

Wireless Synching
- 2.4 GHz Bluetooth 4.0 Low Energy
- Syncing range: 30m (100 feet)
- Syncing devices: iPhone 4s/5/5s/6/6 Plus, iPad 3/4/Air/Mini, Android coming soon

Hazardous Rated Devices & Case

pictures courtesy of www.Xciel.com

Devices
- iPhone 4s/5/5s/6/6 Plus
- iPad 3/4/Air/Mini

Hazardous Ratings
- CSA Class 1 Division 2 Groups A,B,C,D, T6
- ATEX Zone 2 Ex ic IIC T6 Gc

Certifications
- ANSI/ISA Std 12.12.01
- ANSI/UL Std 60950-1
- CAN/CSA std C22.2 No. 60950-1
- CSA Std C22.2 No. 213

Environment
- IP67 (Water / Dust Resistant)
- Humidity 5% to 95% non-condensing
- Opertating Temperature -4 to 102°F (-2 to 39°C)

ITT
ENGINEERED FOR LIFE

GOULDS PUMPS | Bornemann | Engineered Valves | PRO services | Blakers | Ctreat

240 Fall Street
Seneca Falls, NY 13148
www.i-alert.com

© 2015 ITT Corporation, Inc.

B.iALERT2.en-US.2015-06

ASHCROFT®
Trust the shield.™

Type 1130 – 2″, 2½″, 3½″, 4″, 4½″, & 6″ Differential Gauge

- *Piston actuator*
- *Stainless steel case*
- *Ranges from 5 psid-150 psid*
- *Static pressures up to 6000 psi(4)*
- *Aluminum(3), brass or stainless steel bodies(1)*
- *Buna-N O-rings (others available)*
- *Superior magnets for smoother pointer motion*
- *Standard or explosion-proof reed switches available*
- *5-year warranty*

The Type 1130 uses a piston design where small migration of the process media is permissible.(1) It is recommended for high differential and high static pressures, up to 6000 psi. Body materials are available in Aluminum, Brass and Stainless Steel, with Buna, Viton or EPDM seals.(2)

NOTES:

(1) Not for use with incompatible media.

(2) Other wetted parts include stainless steel spring, Teflon piston and ceramic magnet.

(3) Aluminum bodies not to be used with water or corrosive applications.

(4) Static pressure over 3000 psi in SS only.

PRODUCT SPECIFICATIONS

Model Number:	1130
Accuracy (Ascending):	±2%
Migration:	Minor
Ranges:	0-5 psid to 150 psid
Maximum Static Pressure:	3000 psi (6000 psi for SS)
Actuator:	Piston
Case Material:	Stainless steel
Dial Size:	2″ (20), 2½″ (25), 3½″ (35), 4″ (40), 4½″ (45), 6″ (60)
Maximum Process Temp.:	175°F/80°C
Body Materials:	Aluminum (F), brass (A), stainless steel (S)
O-Rings/Diaphragm:	Buna-N
Connection Size (Female):	¼ NPT (25)
Connection Location:	In-Line (S), Lower (L), Back (B)
Window:	Glass

PRODUCT OPTIONS

Switches(1):		Available
⅛ NPT Female Adapter:	XGE	Available
Front Flange:	XFF	Available
Viton O-Rings:	XVD	Available
EPDM O-Rings:	XEM	Available
Fill(3):		
Glycerin	L	Standard
Silicone	XGV	Available
Window		
Plastic:	XPD	Available
Explosion Proof:	XEK	Available(2)
Pipe Mounting Bracket:	XTM	In-line (only)

(1) Applicable to switches:
XV1 – 1 SPST with DIN plug
XV2 – 1 SPST with terminal strip
XV3 – 2 SPST with DIN plug
XV4 – 2 SPST with terminal strip
XV5 – 1 SPDT with DIN plug
XV6 – 1 SPDT with terminal strip
XV7 – 2 SPDT with DIN plug
XV8 – 2 SPDT with terminal strip
Adjustable from 20-100% of range
Preset at 90% ascending
Terminal or DIN connected switches are not available with back connection

(2) Specify lower or back connection for gauge (not available in-line) and switch type V2, V4, V6, V8

(3) Liquid fill has an effect on accuracy that varies with range and temperature. Liquid filling may be required only in some very severe applications.

HOW TO ORDER:

25	1130	FD	25S	XXX	30#

Dial Size: 2″, 2½″, 3½″, 4″, 4½″, & 6″
Case Type Number: 1130
Body Material
Connection Size: ¼ NPTF (25)
Connection Location: In-line (S), Lower (L), Back (B)
Optional Features: see above
Standard Pressure Range

ISO 9001
REGISTERED FIRM
BULLETIN DP-1130

All specifications are subject to change without notice.
All sales subject to standard terms and conditions.
© Ashcroft Inc. 2010 09/14

Ashcroft Inc., 250 East Main Street, Stratford, CT 06614 USA
Tel: 203-378-8281 • Fax: 203-385-0408
email: info@ashcroft.com • www.ashcroft.com

Type 1130 – 2″, 2½″, 3½″, 4″, 4½″, & 6″ Differential Gauge

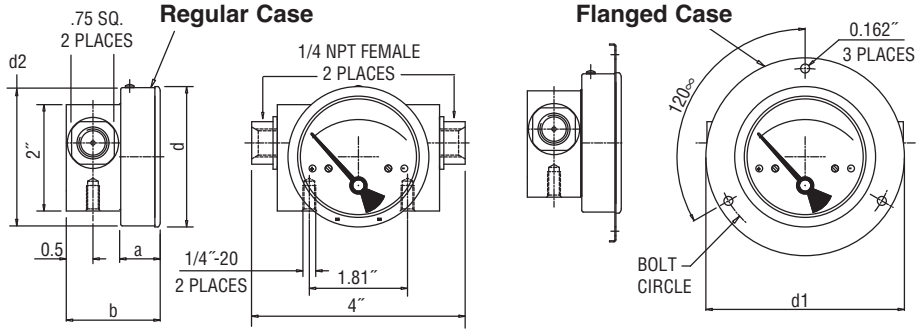

Type 1130 Dimension Drawing

Dial Size	a	b	d	d^1	d^2	Bolt Circle
2″	0.70″	1.70″	2.08″	3.11″	2.04″	2.72″
2.5″	0.75″	1.75″	2.59″	3.66″	2.55″	3.26″
3.5″	0.75″	1.75″	3.26″	4.29″	3.22″	3.89″
4″	0.75″	1.75″	4.10″	5.15″	4.01″	4.76″
4.5″	0.75″	1.75″	4.71″	5.74″	4.60″	5.35″
6″	0.75″	1.75″	6.07″	7.12″	6.00″	6.73″

Type 1130 – Standard Ranges

psi		0-5	0-8	0-10	0-15	0-20	0-25	0-30	
kPa	0-25		0-50	0-75	0-100		0-160	0-200	0-250
kg/cm²-bar	0-0.25		0-0.5	0-0.75	0-1		0-1.6	0-2	0-2.5

psi	0-40	0-50	0-60		0-80		0-100		0-150
kPa	0-300		0-400	0-500		0-600	0-700	0-900	0-1000
kg/cm²-bar	0-3		0-4	0-5		0-6	0-7	0-9	0-10

Ratings for Both Standard & Explosion Proof Switches:

SPST SWITCH
Specifications:
Contact Rating
10 VA ac (rms) or dc (max)
Switching Current
0.5 Amp ac (rms) or dc (max)
Switch Voltage
100 Vac/Vdc (max)

SPDT SWITCH
Specifications:
Contact Rating
3 VA ac (rms) or dc (max)
Switching Current
.3 Amp ac (rms) or dc (max)
Switch Voltage
30 Vac/Vdc (max)

Explosion Proof Switches Information:

Switches and electrical connections are mounted in an explosion-proof enclosure with UL, CSA, Cenelec and FM approval. The enclosure meets Class 1, Groups B, C, D, Class 2 Groups E, F, G, Class 3, NEMA 7 & 9 and IP 66. Two ¾″ electrical conduit connections.

All specifications are subject to change without notice.
All sales subject to standard terms and conditions.
© Ashcroft Inc. 2010 09/14

Ashcroft Inc., 250 East Main Street, Stratford, CT 06614 USA
Tel: 203-378-8281 • Fax: 203-385-0408
email: info@ashcroft.com • www.ashcroft.com

ASHCROFT®
Trust the shield.™

Type 1259 Process Pressure Gauge

- *Solid front safety case*
- *Accuracy complies with ASME B40.1 Grade 2A (±0.5% of span)*
- *As-welded Bourdon tube for safety and longer life*
- *Micrometer adjustable pointer.*
- *Adjustable movement*
- *Ranges: vac to 20,000 psi*
- *Date coded socket to ensure pedigree*
- *Wetted part material printed on dial*
- *Liquid filled case option (Code L)*

The Type 1259 process gauge is offered with an as-welded Bourdon tube to ensure safety and a long life. Meeting ASME B40.1, the Type 1259 process gauge has been engineered to meet marketplace requirements.

TEMPERATURE LIMITS

	Ambient	Process	Storage
Dry	–20/200°F (–29/93°C)	–20/250°F (–29/121°C)	–40/250°F (–40/121°C)
LF (glycerin)	20/150°F (7/66°C)	20/200°F (7/93°C)	0/150°F (–18/66°C)

Note: Other than discoloration of the dial and hardening of the gasketing that may occur as ambient or process temperatures exceeds 150°F, non-liquid-filled gauges with standard glass windows, can withstand continuous operating temperatures up to 250°F (121°C). Liquid-filled gauges can withstand 200°F (93°C) but glycerin fill and acrylic window will tend to yellow. Accuracy at temperatures above or below the reference ambient temperature of 68°F (20°C) will be affected by approximately .4% per 25°F. Gauges with welded joints will withstand 750°F (450°F (232°C) with silver brazed joints) for short times without rupture, although other parts of the gauge will be destroyed and calibration will be lost. For continuous use and for process or ambient temperatures above 250°F (121°C), a diaphragm seal or capillary or siphon is recommended.

PRODUCT SPECIFICATIONS

Model Number:	1259
Accuracy:	½% full scale (Grade 2A, ASME B40.100)
Ranges:	Vacuum – 20,000 psi
Ring Type:	Cam lock, fiberglass reinforced thermoplastic
Dial Size:	4½" diameter
Case:	Solid front safety
Case Material:	Fiberglass reinforced thermoplastic
Weather Protection:	Dry Case: IP54 Liquid filled or hermetically sealed case: IP 65
Window:	Glass
Dial:	Aluminum, white background, black pressure scale.
Pointer:	Micrometer adjustable
Movement:	Adjustable 300 series ss
Bourdon Tube & Socket:	316L SS/316L SS (S)[1] K Monel/Monel (P)[1]
Conn. Size:	¼, ½ NPT
Conn. Location:	Lower
Weight (Lbs.)	2.5 (Dry) 3.5 (Liquid Filled)

PRODUCT OPTIONS

Fill:	Glycerin
Hermetic Seal:	XLJ
Flush Mounting Ring:	X56, X57
Shatter Proof Glass Window:	XSG
Window Acrylic:	XPD

[1] Joints welded

Dimensions

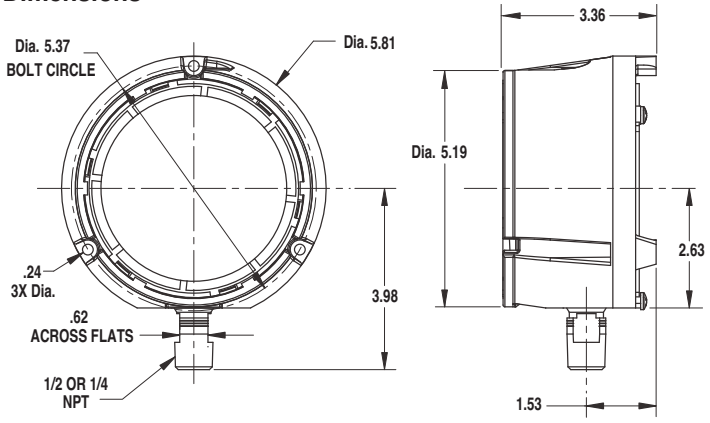

ISO 9001
REGISTERED FIRM

BULLETIN PR-1259

All specifications are subject to change without notice.
All sales subject to standard terms and conditions.
© 2014 Ashcroft Inc. 11/14

Ashcroft Inc., 250 East Main Street, Stratford, CT 06614 USA
Tel: 203-378-8281 • Fax: 203-385-0408
email: info@ashcroft.com • www.ashcroft.com

ASHCROFT®
Trust the shield.™

Type 1259 Process Pressure Gauge

PSI RANGES
Pressure – psi
Range
0/15
0/30
0/60
0/100
0/160
0/200
0/300
0/400
0/600
0/800
0/1000
0/1500
0/2000
0/3000
0/4000
0/6000
0/10,000
0/20,000
Vacuum
30/0 in.Hg
34/0 ftH_20
Compound
30˝Hg/15 psi
30˝Hg/30 psi
30˝Hg/60 psi
30˝Hg/100 psi
30˝Hg/150 psi
30˝Hg/300 psi

METRIC RANGES	
Pressure – kg/cm² and bar	
Range	**(Outer Scale) psi**
0/1	0/14
0/1.6	0/22
0/2.5	0/35
0/4	0/55
0/6	0/85
0/10	0/140
0/16	0/220
0/25	0/350
0/40	0/550
0/60	0/850
0/100	1400
0/160	2200
0/250	3500
0/400	5500
0/600	8500
0/1000	14,000
0/1600	22,000
Vacuum	**Outer Scale**
–1/0	30˝Hg
Compound	
–1/0/1.5	30˝Hg/20
–1/0/3	30˝Hg/40
–1/0/5	30˝Hg/70
–1/0/9	30˝Hg/125
–1/0/15	30˝Hg/215
–1/0/24	30˝Hg/340

METRIC RANGES	
Pressure – kPa	
Range	**(Outer Scale) psi**
0/100	0/14
0/160	0/22
0/250	0/35
0/400	0/55
0/600	0/85
0/1000	0/140
0/1600	0/220
0/2500	0/350
0/4000	0/550
0/6000	0/850
0/10,000	1400
0/16,000	2200
0/25,000	3500
0/40,000	5500
0/60,000	8500
0/100,000	14,000
0/160,00	22,000
Vacuum	**Outer Scale**
–100/0	30˝Hg
Compound	
–100/0/150	30˝Hg/20
–100/0/300	30˝Hg/40
–100/0/500	30˝Hg/70
–100/0/900	30˝Hg/125
–100/0/1500	30˝Hg/215
–100/0/2400	30˝Hg/340

Pressure – mPa	
Range	**(Outer Scale) psi**
0/0.1	0/14
0/0.16	0/22
0/0.25	0/35
0/0.4	0/55
0/0.6	0/85
0/1	0/140
0/1.6	0/220
0/2.5	0/350
0/4	0/550
0/6	0/850
Vacuum	**Outer Scale**
–0.1/0	30˝Hg
Compound	
–0.1/0/0.15	30˝Hg/20
–0.1/0/0.3	30˝Hg/40
–0.1/0/0.5	30˝Hg/70
–0.1/0/0.9	30˝Hg/125
–0.1/0/1.5	30˝Hg/215
–0.1/0/2.4	30˝Hg/340

Order Coding Example

45	1259	S	S	04	L	OPTIONAL X VARIATIONS	100	#

SIZE	TYPE	SYSTEM (TUBE & SOCKET)	CASE DESIGN SOLID FRONT	PROCESS CONNECTION SIZE	CONNECTION LOCATION	OPTIONS (X VARIATIONS)[1]	RANGE	ENGINEERING UNITS
(45) 4½	**1259**	**(S)** 316L[2] **(P)** K-Monel 500 tube, Monel 400 socket[2] [2] Max pressure 30,000psi	**(S)** Dry (IP54) **(SL)** Liquid filled (glycerin standard) (IP65)	**(02)** 1/4 NPT male **(04)** 1/2 NPT male	**(L)** Lower	**(LJ)** Hermetically Sealed, IP65 **(NH)** St. St. Wired Tag **(PD)** Acrylic window **(SG)** Safety glass **(56)** Flush mounting ring [1] Others on request	See above	**(#)** PSI **(BR)**) Bar **(KG)** Kilograms/CM2 **(KP)** Kilopascal **(IMV)** Inches of Mercury Vacuum

ISO 9001
REGISTERED FIRM

BULLETIN PR-1259

All specifications are subject to change without notice.
All sales subject to standard terms and conditions.
© 2014 Ashcroft Inc. 11/14

Ashcroft Inc., 250 East Main Street, Stratford, CT 06614 USA
Tel: 203-378-8281 • Fax: 203-385-0408
email: info@ashcroft.com • www.ashcroft.com

Silent Globe Check Valves

CF125ISC - Cast Iron

ASME Class 125 Flanged End Connections

Sure Flow Globe Check Valves are designed to close before the pump stops completely. This prevents flow reversal which eliminates water hammer and system surges associated with valve closure. They feature quiet operation, a guided disc and can be installed in the vertical or horizontal position. The CF125ISC is offered in sizes ranging from 2" to 24".

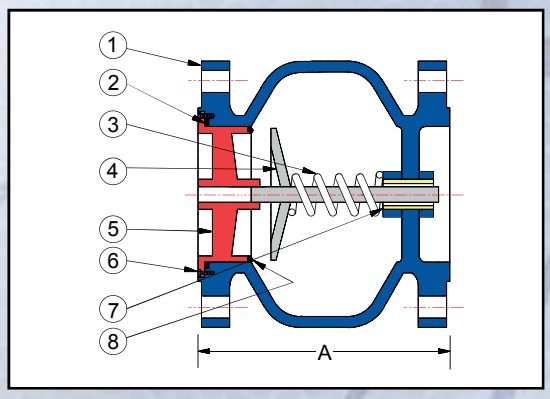

Construction		
Item	Description	Material
1	Cast Body	A126 Class B
2	O-Ring	Buna-N
3	Spring	Stainless Steel
4	Disc	Stainless Steel
5	Seat	Stainless Steel
6	Screw	Stainless Steel
7	Bushing	Stainless Steel
8	(Optional) Quad Ring	Buna-N

Notes:

- It is recommended that valves be installed 7 to 10 pipe lengths away from the turbulence.
- Consult factory for optional construction materials and installation instructions. Optional resilient seating of Buna-N or Viton Quad Ring available for 6" size and larger.

Manufacturer reserves the right to modify dimensions, materials, or design. Consult factory for certification.

Dimensions (Inches)				
Size		A	Cv	Shipping Weight (LBS)
Inches	Prefix			
2	0200	6 1/4	70	30
2 1/2	0250	7	105	34
3	0300	7 1/2	147	50
4	0400	8 1/2	265	75
5	0500	9 1/2	430	100
6	0600	10 1/2	605	130
8	0800	13 1/2	1,105	240
10	1000	16 1/4	1,700	360
12	1200	20 1/4	2,575	600
14	1400	22 3/4	3,350	710
16	1600	24 3/4	4,300	810
18	1800	22 1/2	5,593	910
20	2000	24	7,093	1,140
24	2400	24	10,562	2,600

Ordering Information

Example: Include full description

Size (Prefix)	Model Number
0400	**CF125ISC**

4" Flat Face Flanged Silent Check Valve, Cast Iron, 316 Stainless Steel Disc.

Operating Pressures and Temperatures		
Type	Size	psi @ Temp WOG
CF125ISC	2" - 12"	200 @ 150 °F
	14" - 24"	150 @ 150 °F

Sure Flow Equipment Inc.

Toll Free: 1-800-263-8251 Toll Free Fax: 1-800-876-1164
International: 1-905-335-1350 International Fax: 1-905-332-4993
Email: info@sureflowequipment.com www.sureflowequipment.com

REVISIONS					
REV	DESCRIPTION	ECN	DATE	BY	APPROVED
F	Updated Top plate closure, pre cuts	-	6/25/13	JS	-
-	-	-	-	-	-

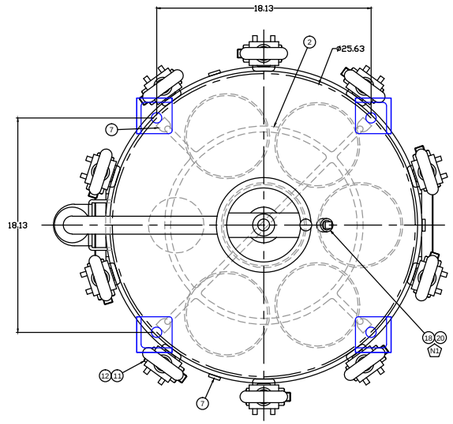

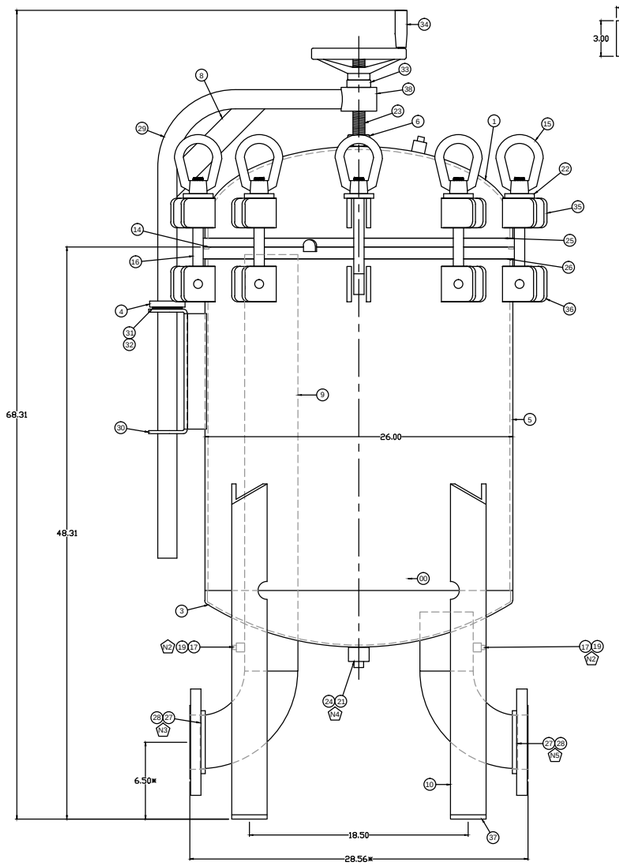

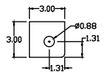

Balloon	Part #	Description	Quantity
38	3RDC	3" ROUND ROD CARBON A36 20FT	2
37	PL-C-144	Plate,Feet,3x3x.375,SA-36	4
36	PL-C-134-NC	Ear,Shell,MR,C/S,SA-36	10
35	PL-C-135-NC	Ear,LID,MR,C/S,SA-36	10
34	KW-30748	Handle Wheel,Aluminum,8"OD,	1
33	1"TB-HD	1" THRUST BEARING, HEAVY DUT	1
32	DTBR	WASHER THRUST TRD 2840	2
31	DTB	DAVIT THRUST BEARINGS TORRIN	1
30	DLBRC	BRACKET DAVIT LIFT 1/4" HR	1
29	DLAC	DAVIT LIFT ARM CARBON	1
28	4FC	4" RFSO FLANGE CARBON 150#	2
27	4-90-C	4" 90 DEGREE CARBON ELBOW LR	2
26	26TPC6D4	TOP PLATE.26.75"OD,1"T,6 Bag	1
25	HR-26.75-C-PART	Head Ring,26.75"OD,SA-36	1
24	1PPC	1" PIPE PLUG CARBON	1
23	FTS-1X8-C-ZP	Full Thread Stud,1"-8x8"L	1
22	.375SQW	.375" X 2" X 2.5" SQUARE WAS	10
21	1HCC	1" HALF COUPLING CARBON 3000	1
20	.50HCC	Coupler,Half,.50",3000 class	1
19	.25HCC	Coupler,Half,.25",3000 class	2
18	.50PPC	1/2 PIPE PLUG CARBON	1
17	.25PPC	1/4 PIPE PLUG CARBON STEEL	2
16	REM	ROD END 7/8"-9 X 9",4140 All	10
15	ENM	EYE NUT 7/8-9,C1045	10
14	CB26LB	O Ring,Buna,LR6/C26	1
13	BT-LR-2-SR-S	Basket,LR Style,#2,9/64"Perf	6 Not Shown
12	.75NLN	.75-10 NYLON LOCK NUT ZINC P	10
11	.75HB	.75-10 X 3.5" GR5 HEX HEAD S	10
10	3ANG.375C	3"X3" ANGLE 3/8" A36 CARBN 2	111.75
9	4P-SCH40-C	Pipe,4",Sch.40,SA53-B,Type E	40.19
8	.375X2HRC	3/8" X 2" SA36 HR CARBON 20'	10.5
7	PL-C-142	Plate Tab,.25" x 1",SA-36	7
6	HN-1-2H-PF	Hex Nut,1"-8,2H,Plain Finish	1
5	2628RTC.1875	Plate Roll & Tack,SA-36	1
4	PL-C-116	Plate,Donut,3"OD,1.75"ID	1
3	26H1F5-.1875	Head,F&D,26"OD,.1875"t	1
2	HD-26-C-102	Hold Down,MR,SA-36 or Equiv.	1
1	26HFC-.25-NB	HEAD,2:1 Elip,26"OD,.25"WT	1

MARK	QTY	SERVICE	SIZE	TYPE	WALL THICKNESS	WELD DETAIL	NUMBER	PURPOSE
N5	1	Outlet	4"	RFSO	150#	H, U		
N4	1	Drain	1"	NPT	3000#	B		
N3	1	Inlet	4"	RFSO	150#	H, U		
N2	2	Gauge	.25"	NPT	3000#	B		
N1	1	Vent	.5"	NPT	3000#	B	-	-
NOZZLE SCHEDULE							JIGS USED	

APPROVALS		DATE
Approved By	-	-
Checked By	-	-
Drawn By	JS	6/21/13

FINISH INFO	
Prep Sandblast Interior:	SP 7 (Closure)
Prep Sandblast Exterior:	SP 7 (Closure)
Finish Sandblast Interior:	SP 7 (Rough)
Finish Sandblast Exterior:	SP 7 (Rough)
Paint Interior:	Black Epoxy
Paint Exterior:	Black Epoxy

DESIGN INFO	
M.A.W.P.:	150 psig @ 300° F
M.A.E.P.:	0
M.D.M.T.:	-20° F @ 150 psig
Hydro Test Pressure:	195 psig
Radiography:	None
Corrosion Allowance:	None
Weight:	-
Element:	(6) #2 Filter Bag

GENERAL TOLERANCES (unless otherwise noted)	
*	+/- .125" (Critical)
XX.XXXX	+/- .0625"
XX.XXX	+/- .125"
XX.XX	+/- .25"
XX.X	+/- .5"
ANGULAR TOLERANCE : 3°	

GENERAL NOTES

1) All dimensions are in inches unless otherwise noted
2) No heat treatment or impact testing.

PENTAIR
9449 South 550 West
Winamac, IN. 46996
Phone: 574-278-7161 / Fax: 574-278-7131

Part Number: LR6304FAC15

Dwg No.	Revision
2273	F

THIS DOCUMENT IS SOLELY THE PROPERTY OF PENTAIR. REPRODUCTION, USE DISCLOSURE, OR TRANSMISSION OF THIS DOCUMENT OR DETAILS CONTAINED HEREIN, IN PART OR IN WHOLE, IS PROHIBITED WITHOUT WRITTEN CONSENT OF PENTAIR ENGINEERING. THIS DOCUMENT AND ANY COPIES SHALL BE RETURNED TO PENTAIR UPON WRITTEN REQUEST.

Scale: Not to Scale | AutoCAD Format | Sheet 1 of 1

INDUSTRIAL MULTI-ROUND SERIES
CARTRIDGE HOUSINGS

Multi-Round Liquid Cartridge Housings offer the versatility of choosing the correct cartridges for the needed flow rates, chemical compatibility and particle retention.

FEATURES/BENEFITS

Flow rates from 120 to 4100 gpm (454.2 to 15,518.5 Lpm)

Carbon or Stainless Steel construction

Bearing assisted davit assemblies

Buna-N lid seals

316 Stainless Steel cup and spring assemblies

150 PSI (10.3 bar) pressure rating

Differential, drain and vent ports

Heavy-duty support legs

Two-part epoxy finish inside and outside on carbon steel housings

316 Stainless Steel center guide posts

Zinc-plated swing bolts and eye nuts

11-round to 205-round capacity

Made to accept double open end cartridges (DOE) or 222 style with closed top cap*

APPLICATIONS

Commercial

General Industrial

OPTIONS

Duplexing for continual flow during maintenance

Hydraulic lid lift

Higher pressure rating

226 style catridge compatibility

ASME Code U

Various connection sizes and types

** Note: Type of element top which will be used must be noted at the time of the housing order.*

DIMENSIONS

MODEL	# OF ELEMENTS	CARTRIDGE LENGTH	CONNECTION SIZE		DIMENSIONS													WEIGHT	
					A	B	C	D	E	F	G	H	I	J	K	L	M		
C1212	11	20"	2	IN	12.0	2.0	42.3	59.8	8.0	11.0	9.4	8.7	20.5	40.4	57.9	11.0	6.0	LBS	400
				MM	305	51	1,075	1,519	203	279	238	221	521	1,027	1,472	279	152	KG	181
			3	IN	12.0	3.0	44.3	61.8	10.0	11.0	9.4	8.7	20.5	41.6	59.1	11.0	6.0	LBS	410
				MM	305	76	1,125	1,570	254	279	238	221	521	1,056	1,500	279	152	KG	186
			4	IN	12.0	4.0	46.8	64.3	12.5	11.0	9.4	8.7	20.5	42.6	60.1	11.0	6.0	LBS	420
				MM	305	102	1,189	1,633	318	279	238	221	521	1,081	1,526	279	152	KG	190
		30"	2	IN	12.0	2.0	52.3	69.8	8.0	11.0	9.4	8.7	20.5	50.4	67.9	11.0	6.0	LBS	400
				MM	305	51	1,329	1,773	203	279	238	221	521	1,281	1,726	279	152	KG	181
			3	IN	12.0	3.0	54.3	71.8	10.0	11.0	9.4	8.7	20.5	51.6	69.1	11.0	6.0	LBS	410
				MM	305	76	1,379	1,824	254	279	238	221	521	1,310	1,754	279	152	KG	186
			4	IN	12.0	4.0	56.8	74.3	12.5	11.0	9.4	8.7	20.5	52.6	70.1	11.0	6.0	LBS	420
				MM	305	102	1,443	1,887	318	279	238	221	521	1,335	1,780	279	152	KG	190
		40"	2	IN	12.0	2.0	62.3	79.8	8.0	11.0	9.4	8.7	20.5	60.4	77.9	11.0	6.0	LBS	400
				MM	305	51	1,583	2,027	203	279	238	221	521	1,535	1,980	279	152	KG	181
			3	IN	12.0	3.0	64.3	81.8	10.0	11.0	9.4	8.7	20.5	61.6	79.1	11.0	6.0	LBS	410
				MM	305	76	1,633	2,078	254	279	238	221	521	1564	2,008	279	152	KG	186
			4	IN	12.0	4.0	66.8	84.3	12.5	11.0	9.4	8.7	20.5	62.6	80.1	11.0	6.0	LBS	420
				MM	305	102	1,697	2,141	318	279	238	221	521	1589	2,034	279	152	KG	190
C1616	20	20"	2	IN	16.0	2.0	40.4	61.8	8.0	13.0	11.1	11.1	20.5	38.5	59.9	11.0	6.0	LBS	400
				MM	406	51	1,026	1,570	203	330	281	281	521	978	1,522	279	152	KG	181
			3	IN	16.0	3.0	42.4	63.9	10.0	13.0	11.1	11.1	20.5	39.6	61.1	11.0	6.0	LBS	410
				MM	406	76	1,077	1,623	254	330	281	281	521	1,007	1,551	279	152	KG	186
			4	IN	16.0	4.0	46.1	66.3	12.5	13.0	11.1	11.1	20.5	40.7	62.1	11.0	6.0	LBS	420
				MM	406	102	1,170	1,684	318	330	281	281	521	1,034	1,576	279	152	KG	190
		30"	2	IN	16.0	2.0	50.4	71.8	8.0	13.0	11.1	11.1	20.5	48.5	69.9	11.0	6.0	LBS	400
				MM	406	51	1,280	1,824	203	330	281	281	521	1,232	1,776	279	152	KG	181
			3	IN	16.0	3.0	52.4	73.9	10.0	13.0	11.1	11.1	20.5	49.6	71.1	11.0	6.0	LBS	410
				MM	406	76	1,331	1,877	254	330	281	281	521	1,261	1,805	279	152	KG	186
			4	IN	16.0	4.0	56.1	76.3	12.5	13.0	11.1	11.1	20.5	50.7	72.1	11.0	6.0	LBS	420
				MM	406	102	1,424	1,938	318	330	281	281	521	1,288	1,830	279	152	KG	190
		40"	2	IN	16.0	2.0	60.4	81.8	8.0	13.0	11.1	11.1	20.5	58.5	79.9	11.0	6.0	LBS	400
				MM	406	51	1,534	2,078	203	330	281	281	521	1,486	2,030	279	152	KG	181
			3	IN	16.0	3.0	62.4	83.9	10.0	13.0	11.1	11.1	20.5	59.6	81.1	11.0	6.0	LBS	410
				MM	406	76	1,585	2,131	254	330	281	281	521	1,515	2,059	279	152	KG	186
			4	IN	16.0	4.0	66.1	86.3	12.5	13.0	11.1	11.1	20.5	60.7	82.1	11.0	6.0	LBS	420
				MM	406	102	1,678	2,192	318	330	281	281	521	1,542	2,084	279	152	KG	190

All dimensions are approximate.

DIMENSIONS (CONTINUED)

MODEL	# OF ELEMENTS	CARTRIDGE LENGTH	CONNECTION SIZE		DIMENSIONS													WEIGHT	
					A	B	C	D	E	F	G	H	I	J	K	L	M		
C1818	26	20"	2	IN	18.0	2.0	40.6	59.5	8.0	14.0	12.1	12.4	20.5	38.8	57.8	11.0	6.0	LBS	525
				MM	457	51	1,032	1,511	203	356	308	314	521	986	1,467	279	152	KG	238
			3	IN	18.0	3.0	42.7	61.6	10.0	14.0	12.1	12.4	20.5	39.9	58.9	11.0	6.0	LBS	535
				MM	457	76	1,084	1,565	254	356	308	314	521	1,014	1,496	279	152	KG	243
			4	IN	18.0	4.0	45.1	64.1	12.5	14.0	12.1	12.4	20.5	40.9	59.9	11.0	6.0	LBS	545
				MM	457	102	1,146	1,627	318	356	308	314	521	1,040	1,521	279	152	KG	247
		30"	2	IN	18.0	2.0	50.6	69.5	8.0	14.0	12.1	12.4	20.5	48.8	67.8	11.0	6.0	LBS	525
				MM	457	51	1,286	1,765	203	356	308	314	521	1,240	1,721	279	152	KG	238
			3	IN	18.0	3.0	52.7	71.6	10.0	14.0	12.1	12.4	20.5	49.9	68.9	11.0	6.0	LBS	535
				MM	457	76	1,338	1,819	254	356	308	314	521	1,268	1,750	279	152	KG	243
			4	IN	18.0	4.0	55.1	74.1	12.5	14.0	12.1	12.4	20.5	50.9	69.9	11.0	6.0	LBS	545
				MM	457	102	1,400	1,881	318	356	308	314	521	1,294	1,775	279	152	KG	247
		40"	2	IN	18.0	2.0	60.6	79.5	8.0	14.0	12.1	12.4	20.5	58.8	77.8	11.0	6.0	LBS	525
				MM	457	51	1,540	2,019	203	356	308	314	521	1,494	1,975	279	152	KG	238
			3	IN	18.0	3.0	62.7	81.6	10.0	14.0	12.1	12.4	20.5	59.9	78.9	11.0	6.0	LBS	535
				MM	457	76	1,592	2,073	254	356	308	314	521	1,522	2,004	279	152	KG	243
			4	IN	18.0	4.0	65.1	84.1	12.5	14.0	12.1	12.4	20.5	60.9	79.9	11.0	6.0	LBS	545
				MM	457	102	1,654	2,135	318	356	308	314	521	1,548	2,029	279	152	KG	247
C2424	50	20"	3	IN	24.0	3.0	43.9	64.3	10.0	17.0	15.2	16.7	20.5	41.2	61.6	13.0	6.0	LBS	625
				MM	610	76	1,116	1,633	254	432	386	424	521	1,046	1,564	330	152	KG	283
			4	IN	24.0	4.0	46.4	66.8	12.5	17.0	15.2	16.7	20.5	42.2	62.6	13.0	6.0	LBS	635
				MM	610	102	1,178	1,695	318	432	386	424	521	1,072	1,589	330	152	KG	288
			6	IN	24.0	6.0	50.3	70.6	16.5	17.0	15.2	16.7	20.5	44.3	64.6	13.0	6.0	LBS	645
				MM	610	152	1,276	1,794	419	432	386	424	521	1,124	1,642	330	152	KG	293
		30"	3	IN	24.0	3.0	53.9	74.3	10.0	17.0	15.2	16.7	20.5	51.2	71.6	13.0	6.0	LBS	625
				MM	610	76	1,370	1,887	254	432	386	424	521	1,300	1,818	330	152	KG	283
			4	IN	24.0	4.0	56.4	76.8	12.5	17.0	15.2	16.7	20.5	52.2	72.6	13.0	6.0	LBS	635
				MM	610	102	1,432	1,949	318	432	386	424	521	1,326	1,843	330	152	KG	288
			6	IN	24.0	6.0	60.3	80.6	16.5	17.0	15.2	16.7	20.5	54.3	74.6	13.0	6.0	LBS	645
				MM	610	152	1,530	2,048	419	432	386	424	521	1,378	1,896	330	152	KG	293
		40"	3	IN	24.0	3.0	63.9	84.3	10.0	17.0	15.2	16.7	20.5	61.2	81.6	13.0	6.0	LBS	625
				MM	610	76	1,624	2,141	254	432	386	424	521	1,554	2,072	330	152	KG	283
			4	IN	24.0	4.0	66.4	86.8	12.5	17.0	15.2	16.7	20.5	62.2	82.6	13.0	6.0	LBS	635
				MM	610	102	1,686	2,203	318	432	386	424	521	1,580	2,097	330	152	KG	288
			6	IN	24.0	6.0	70.3	90.6	16.5	17.0	15.2	16.7	20.5	64.3	84.6	13.0	6.0	LBS	645
				MM	610	152	1,784	2,302	419	432	386	424	521	1,632	2,150	330	152	KG	293

All dimensions are approximate.

DIMENSIONS (CONTINUED)

MODEL	# OF ELEMENTS	CARTRIDGE LENGTH	CONNECTION SIZE		DIMENSIONS													WEIGHT	
					A	B	C	D	E	F	G	H	I	J	K	L	M		
C3030	78	20″	3	IN	30.0	3.0	48.9	70.8	10.0	20.0	18.2	20.9	20.5	46.1	68.0	13.0	6.0	LBS	665
				MM	762	76	1,242	1,797	254	508	462	531	521	1,172	1,727	330	152	KG	302
			4	IN	30.0	4.0	51.3	73.2	12.5	20.0	18.2	20.9	20.5	47.1	69.0	13.0	6.0	LBS	705
				MM	762	102	1,303	1,859	318	508	462	531	521	1,197	1,753	330	152	KG	320
			6	IN	30.0	6.0	55.3	77.1	16.5	20.0	18.2	20.9	20.5	49.2	71.1	13.0	6.0	LBS	850
				MM	762	152	1,403	1,959	419	508	462	531	521	1,249	1,805	330	152	KG	385
		30″	3	IN	30.0	3.0	58.9	80.8	10.0	20.0	18.2	20.9	20.5	56.1	78.0	13.0	6.0	LBS	665
				MM	762	76	1,496	2,051	254	508	462	531	521	1,426	1,981	330	152	KG	302
			4	IN	30.0	4.0	61.3	83.2	12.5	20.0	18.2	20.9	20.5	57.1	79.0	13.0	6.0	LBS	705
				MM	762	102	1,557	2,113	318	508	462	531	521	1,451	2,007	330	152	KG	320
			6	IN	30.0	6.0	65.3	87.1	16.5	20.0	18.2	20.9	20.5	59.2	81.1	13.0	6.0	LBS	850
				MM	762	152	1,657	2,213	419	508	462	531	521	1,503	2,059	330	152	KG	385
		40″	3	IN	30.0	3.0	68.9	90.8	10.0	20.0	18.2	20.9	20.5	66.1	88.0	13.0	6.0	LBS	665
				MM	762	76	1,750	2,305	254	508	462	531	521	1,680	2,235	330	152	KG	302
			4	IN	30.0	4.0	71.3	93.2	12.5	20.0	18.2	20.9	20.5	67.1	89.0	13.0	6.0	LBS	705
				MM	762	102	1,811	2,367	318	508	462	531	521	1,705	2,261	330	152	KG	320
			6	IN	30.0	6.0	75.3	97.1	16.5	20.0	18.2	20.9	20.5	69.2	91.1	13.0	6.0	LBS	850
				MM	762	152	1,911	2,467	419	508	462	531	521	1,757	2,313	330	152	KG	385
C3636	112	20″	4	IN	36.0	4.0	48.9	70.8	12.5	25.0	24.6	25.3	30.5	46.1	68.0	15.0	6.0	LBS	870
				MM	914	102	1,242	1,797	318	635	624	643	775	1,172	1,727	381	152	KG	395
			6	IN	36.0	6.0	51.3	73.2	16.5	25.0	24.6	25.3	30.5	47.1	69.0	15.0	6.0	LBS	1,010
				MM	914	152	1,303	1,859	419	635	624	643	775	1,197	1,753	381	152	KG	458
			8	IN	36.0	8.0	55.3	77.1	20.8	25.0	24.6	25.3	30.5	49.2	71.1	15.0	6.0	LBS	1,150
				MM	914	203	1,403	1,959	528	635	624	643	775	1,249	1,805	381	152	KG	522
		30″	4	IN	36.0	4.0	58.9	80.8	10.0	20.0	18.2	20.9	20.5	56.1	78.0	13.0	6.0	LBS	870
				MM	914	102	1,496	2,051	254	508	462	531	521	1,426	1,981	330	152	KG	395
			6	IN	36.0	6.0	61.3	83.2	12.5	20.0	18.2	20.9	20.5	57.1	79.0	13.0	6.0	LBS	1,010
				MM	914	152	1,557	2,113	318	508	462	531	521	1,451	2,007	330	152	KG	458
			8	IN	36.0	8.0	65.3	87.1	16.5	20.0	18.2	20.9	20.5	59.2	81.1	13.0	6.0	LBS	1,150
				MM	914	203	1,657	2,213	419	508	462	531	521	1,503	2,059	330	152	KG	522
		40″	4	IN	36.0	4.0	74.7	99.6	12.5	25.0	24.6	25.3	30.5	68.2	93.1	15.0	6.0	LBS	870
				MM	914	102	1,897	2,531	318	635	623.8	643	775	1,732	2,366	381	152	KG	395
			6	IN	36.0	6.0	78.9	103.8	16.5	25.0	24.6	25.3	30.5	70.3	95.3	15.0	6.0	LBS	1,010
				MM	914	152	2,004	2,637	419	635	624	643	775	1,786	2,419	381	152	KG	458
			8	IN	36.0	8.0	83.1	108.1	20.8	25.0	24.6	25.3	30.5	72.3	97.3	15.0	6.0	LBS	1,150
				MM	914	203	2,112	2,747	528	635	624	643	775	1,837	2,470	381	152	KG	522

All dimensions are approximate.

DIMENSIONS (CONTINUED)

MODEL	# OF ELEMENTS	CARTRIDGE LENGTH	CONNECTION SIZE		DIMENSIONS													WEIGHT	
					A	B	C	D	E	F	G	H	I	J	K	L	M		
C4242	155	20"	6	IN	42.0	6.0	60.8	87.7	16.5	28.0	27.6	29.5	30.5	52.2	79.2	15.0	6.0	LBS	1,960
				MM	1,067	152	1,543	2,227	419	711	702	749	775	1,326	2,011	381	152	KG	889
			8	IN	42.0	8.0	65.0	91.9	20.8	28.0	27.6	29.5	30.5	54.2	81.1	15.0	6.0	LBS	2,070
				MM	1,067	203	1,651	2,335	528	711	701	749	775	1,376	2,061	381	152	KG	939
			10	IN	42.0	10.0	69.0	95.9	25.0	28.0	27.6	29.5	30.5	56.3	83.3	15.0	6.0	LBS	2,200
				MM	1,067	254	1,753	2,437	635	711	701	749	775	1,430	2,115	381	152	KG	998
		30"	6	IN	42.0	6.0	70.8	97.7	16.5	28.0	27.6	29.5	30.5	62.2	89.2	15.0	6.0	LBS	1,960
				MM	1,067	152	1,797	2,481	419	711	702	749	775	1,580	2,265	381	152	KG	889
			8	IN	42.0	8.0	75.0	101.9	20.8	28.0	27.6	29.5	30.5	64.2	91.1	15.0	6.0	LBS	2,070
				MM	1,067	203	1,905	2,589	528	711	701	749	775	1,630	2,315	381	152	KG	939
			10	IN	42.0	10.0	79.0	105.9	25.0	28.0	27.6	29.5	30.5	66.3	93.3	15.0	6.0	LBS	2,200
				MM	1,067	254	2,007	2,691	635	711	701	749	775	1,684	2,369	381	152	KG	998
		40"	6	IN	42.0	6.0	80.8	107.7	16.5	28.0	27.6	29.5	30.5	72.2	99.2	15.0	6.0	LBS	1,960
				MM	1,067	152	2,051	2,735	419	711	702	749	775	1,834	2,519	381	152	KG	889
			8	IN	42.0	8.0	85.0	111.9	20.8	28.0	27.6	29.5	30.5	74.2	101.1	15.0	6.0	LBS	2,070
				MM	1,067	203	2,159	2,843	528	711	701	749	775	1,884	2,569	381	152	KG	939
			10	IN	42.0	10.0	89.0	115.9	25.0	28.0	27.6	29.5	30.5	76.3	103.3	15.0	6.0	LBS	2,200
				MM	1,067	254	2,261	2,945	635	711	701	749	775	1,938	2,623	381	152	KG	998
C4848	205	20"	8	IN	48.0	8.0	66.6	95.1	20.8	31.0	30.6	33.2	30.5	55.8	84.2	17.0	6.0	LBS	2,200
				MM	1,219	203	1,692	2,415	528	787	776	843	775	1,416	2,138	432	152	KG	998
			10	IN	48.0	10.0	70.6	99.1	25.0	31.0	30.6	33.2	30.5	57.9	86.3	17.0	6.0	LBS	2,350
				MM	1,219	254	1,794	2,516	635	787	776	843	775	1,470	2,192	432	152	KG	1,066
			12	IN	48.0	12.0	75.0	103.4	29.5	31.0	30.6	33.2	30.5	59.9	88.3	17.0	6.0	LBS	2,530
				MM	1,219	305	1,905	2,627	749	787	776	843	775	1,521	2,243	432	152	KG	1,147
		30"	8	IN	48.0	8.0	76.6	105.1	20.8	31.0	30.6	33.2	30.5	65.8	94.2	17.0	6.0	LBS	2,200
				MM	1,219	203	1,946	2,669	528	787	776	843	775	1,670	2,392	432	152	KG	998
			10	IN	48.0	10.0	80.6	109.1	25.0	31.0	30.6	33.2	30.5	67.9	96.3	17.0	6.0	LBS	2,350
				MM	1,219	254	2,048	2,770	635	787	776	843	775	1,724	2,446	432	152	KG	1,066
			12	IN	48.0	12.0	85.0	113.4	29.5	31.0	30.6	33.2	30.5	69.9	98.3	17.0	6.0	LBS	2,530
				MM	1,219	305	2,159	2,881	749	787	776	843	775	1,775	2,497	432	152	KG	1,147
		40"	8	IN	48.0	8.0	86.6	115.1	20.8	31.0	30.6	33.2	30.5	75.8	104.2	17.0	6.0	LBS	2,200
				MM	1,219	203	2,200	2,923	528	787	776	843	775	1,924	2,646	432	152	KG	998
			10	IN	48.0	10.0	90.6	119.1	25.0	31.0	30.6	33.2	30.5	77.9	106.3	17.0	6.0	LBS	2,350
				MM	1,219	254	2,302	3,024	635	787	776	843	775	1,978	2,700	432	152	KG	1,066
			12	IN	48.0	12.0	95.0	123.4	29.5	31.0	30.6	33.2	30.5	79.9	108.3	17.0	6.0	LBS	2,530
				MM	1,219	305	2,413	3,135	749	787	776	843	775	2,029	2,751	432	152	KG	1,147

All dimensions are approximate.

STYLE A - BOTTOM OUTLET

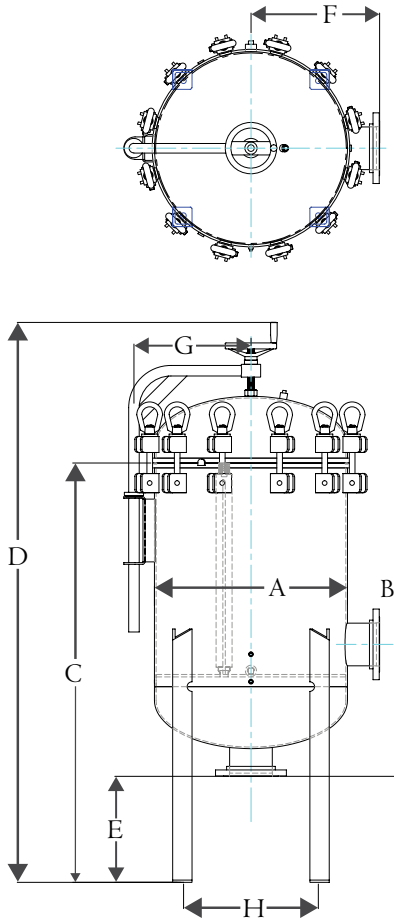

STYLE B - SIDE OUTLET

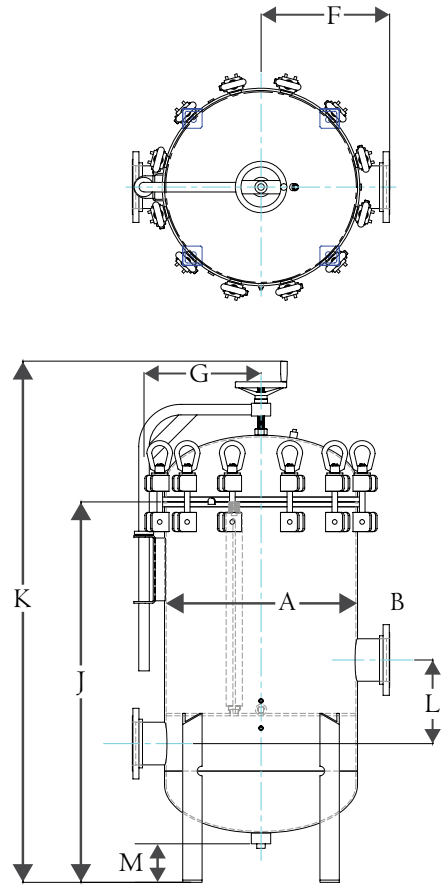

PRESSURE DROP VS FLOW RATE

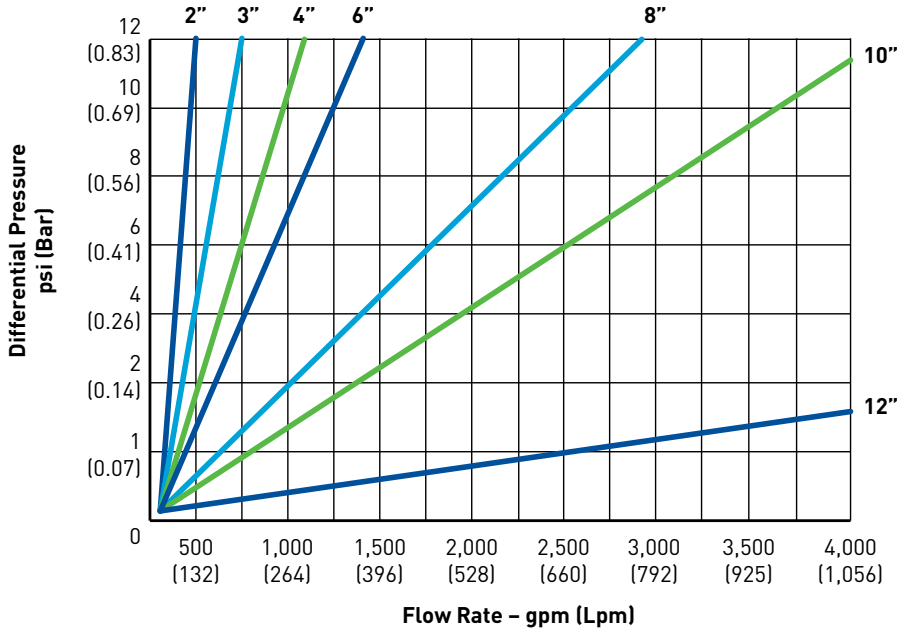

ORDERING INFORMATION

To create your ordering part number, use the part number configurator below.
Custom configurations available. Please contact customer service.

HOUSING EXAMPLE: C1212203FBCD15U

C1212 Housing (C1212), 20" cartridge (20), 3" (3)
Flange connection (F), Oulet connection located on opposite sides (B), Carbon steel (C)
Double open ended element (D), 150 psi (15), ASME Code (U) Stamp (U)

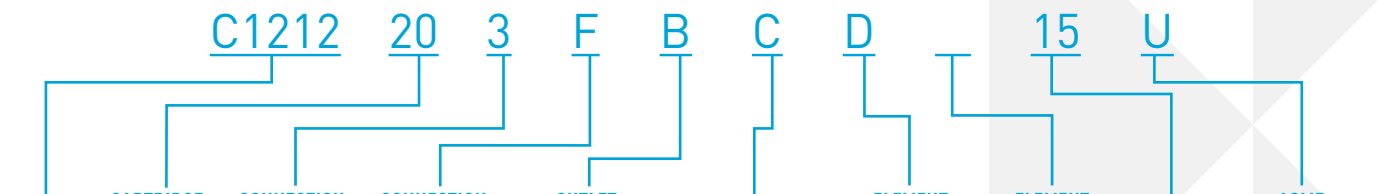

HOUSING	CARTRIDGE SIZE (IN.)	CONNECTION (IN.)	CONNECTION TYPE	OUTLET LOCATION	MATERIAL	ELEMENT BASE	ELEMENT TOP	PSI	ASME CODE
C1212 C1616 C1818 C2424 C3030 C3636 C4242 C4848	20 30 40	REFER TO DIMENSION CHARTS	F = Flange	A = Bottom B = Opposite Side	C = Carbon Steel 4 = 304 SS 4L= 304L SS 6 = 316 SS 6L = 316L SS	D = DOE 22 = 222 Style 26 = 226 Style	S = SOE F = Fin Style None = DOE	15 = 150 30 = 300	U = (U) Stamp None = No Stamp

[1]*Note: If double open end (DOE), it is only required once in the part number and will specify both top and base.*
Cartridges are not included but must be specified as to the type using when ordering the housing.
Carbon steel not recommended for water use as the epoxy coating is not designed as a corrosion inhibitor.

PENTAIR

FILTRATION & PROCESS
5730 NORTH GLEN PARK ROAD, MILWAUKEE, WI 53209
P: 262.238.4400 | F: 262.238.4404 | WWW.PENTAIRINDUSTRIAL.COM | CUSTOMER CARE: 800.279.9404

All Pentair trademarks and logos are owned by Pentair, Inc. or its affiliates. All other registered and unregistered trademarks and logos are the property of their respective owners. Because we are continuously improving our products and services, Pentair reserves the right to change specifications without prior notice. Pentair is an equal opportunity employer.
4003026 Rev D DE14 © 2014 Pentair Residential Filtration, LLC. All rights reserved.

****WARNING-SAFETY INFORMATION****

1. The housings in this catalog, if improperly used, can cause serious injury or death
2. Always wear proper protective clothing for the liquid being filtered. Check your M.S.D.S. for any instructions or suggestions.
3. Do not run housing in excess of the rated pressure or temperature found on the housing tank label.
4. Check chemical compatibility of selected o-ring and housing material before housing installation.
5. Do not open housing when the system is under pressure; always relieve all pressure through housing before opening of housing lid.
6. *Stop all flow of liquid before opening of lid*.
7. Bolt housing to floor, as tipping may occur when lid is opened.

Do not operate over 150 PSI working pressure

MODEL **LR2**: maximum flow rate of **400** gallons per minute
MODEL **LR3**: maximum flow rate of **600** gallons per minute
MODEL **LR4**: maximum flow rate of **800** gallons per minute
MODEL **LR6**: maximum flow rate of **1200** gallons per minute
MODEL **LR8**: maximum flow rate of **1600** gallons per minute
MODEL **LR12**: maximum flow rate of **2000** gallons per minute
MODEL **LR17**: maximum flow rate of **3500** gallons per minute

RECEIVING INSTRUCTIONS:

1. Uncrate the housing(s) and discard any shipping materials
2. Place housing in the desired location on a flat surface, securing the four support legs to the base.

INSTALLATION INSTRUCTIONS:

*** flow to the housing should be turned off***

1. Place housing on pipe connections
   a. N.P.T./Coupling style – We do not recommend using any type of liquid sealant due to contamination of the pipe that may occur.
   b. Flange style – put a small amount of clean, heavy oil on one side of the gaskets, place oiled side down onto existing flanges to hold gaskets.
2. Please note the labeling of the inlet and outlet connections for proper installation. Tighten housing with proper tension to seal housing onto existing pipe or flange. Note: housing has been factory pressure tested to assure a leak proof vessel. If leaking occurs, check for improper connections.
3. Remove lid from housing by turning eye nuts until loosened and swing them down. Using the Lid Lift Handle, swing the lid until full view of the inner housing area is gained.
4. Check inner housing and pipe connections for foreign material and discard any items that have entered during shipping or unpacking.
5. Make sure that the strainer baskets are pushed fully into housing grooves. If using a filter bag, seat bag fully into strainer basket to assure a leak-proof seal between bag and basket. For best results, bag should be fully extended into the basket.
6. Close lid and alternately tighten the eye nuts until lid is fully seated onto the O-ring gasket.
7. Housing is now ready for start-up.

START-UP OF HOUSING

1. Loosen vent plug to allow air to escape from housing.
2. Slowly open the inlet to gradually fill the housing body.
3. When housing body is full (liquid escapes from top vent), close the vent.
4. Open the outlet connection and fully open the inlet connection. Housing is now operating properly.

REMOVAL OF SPENT ELEMENT:

1. When the housing reaches your pre-determined differential pressure, stop flow to the housing and relieve housing pressure through housing drain. Remove enough liquid to show top of basket flange.
2. Loosen eye nuts on housing and, using the Lid Lift Handle, swing the lid to gain full access to the inside of housing.
3. If using a liquid bag, pull the element out of the basket and discard the element in accordance with any required local and federal laws.
4. Remove filter baskets and clean thoroughly.
5. Housing debris and sludge should be removed to prolong filter efficiencies.
6. Replace filter baskets and bags into housings as noted in Installation Instructions above.

RECOMMENDED MAINTENANCE:

Periodic checks should be made on all housing lid and basket o-rings to ensure no cuts or damage has incurred that would cause the housing not to seal. If housing parts become damaged or worn, replace immediately.

OPTIONAL REPLACEMENT PARTS LIST

CB*LB	Buna Lid O-ring
LLHM	Lid Lift Handle
ENM	Eye Nut
REM	Rod End
CBAM	Clevis Bolt Assembly
PER APPLICATION **	Filter Bags
PER APPLICATION **	Filter Basket

* Insert outside diameter of housing model #
** Full line of replacement bags and baskets are available

SMITH-COOPER® INTERNATIONAL

USA 800-766-0076
Fax 323-890-4456
www.smithcooper.com
Los Angeles, CA
Chicago, IL
Atlanta, GA
Vancouver, WA
Houston, TX

Series 0160

CI Wafer / DI Lug Butterfly Valves

- Wafer Body - Cast Iron
- Lug Body - Ductile Iron
- 200 psi 2"-12" / 150 psi 14"-16"
- Buna-N Seat up to 180˚F/82˚C
- EPDM Seat up to 220˚F/104˚C
- Stainless steel stem
- Disc: ductile iron-nickel plated, aluminum bronze or stainless steel
- Phenolic backed cartridge seat
- 24", 36", 48", 60" & 72" extensions
- Fusion bonded epoxy coating
- MSS SP-67/API 609
- ISO 9001:2008 factory
- Installs between ANSI Class 125/150 flanges
- Top flange: ISO 5211
- Not designed for dead-end or steam service

Size IN	Torque				Wafer Weight		Lug Weight	
	75 psi IN / LB	100 psi IN / LB	150 psi IN / LB	200 psi IN / LB	Lever LB	Gear LB	Lever LB	Gear LB
2	135	140	160	170	6.6	18.7	11.5	22.7
2-1/2	145	150	170	190	8.2	20.3	12.3	23.6
3	225	230	240	260	9.0	21.2	12.8	24.0
4	370	390	410	450	11.9	24.0	22.0	33.3
5	570	600	650	690	17.2	28.7	28.7	39.9
6	890	940	1,040	1,100	19.0	30.4	31.1	42.3
8	1,600	1,700	1,900	2,100	32.0	47.8	48.1	61.7
10	2,560	2,760	3,160	3,500	48.5	60.6	70.1	83.8
12	3,800	4,100	4,750	5,400	80.5	112.0	113.0	147.7
14	4,800	5,150	6,000	–	–	134.0	–	199.0
16	6,250	7,000	8,300	–	–	181.0	–	265.0

CI Wafer / DI Lug Butterfly Valves

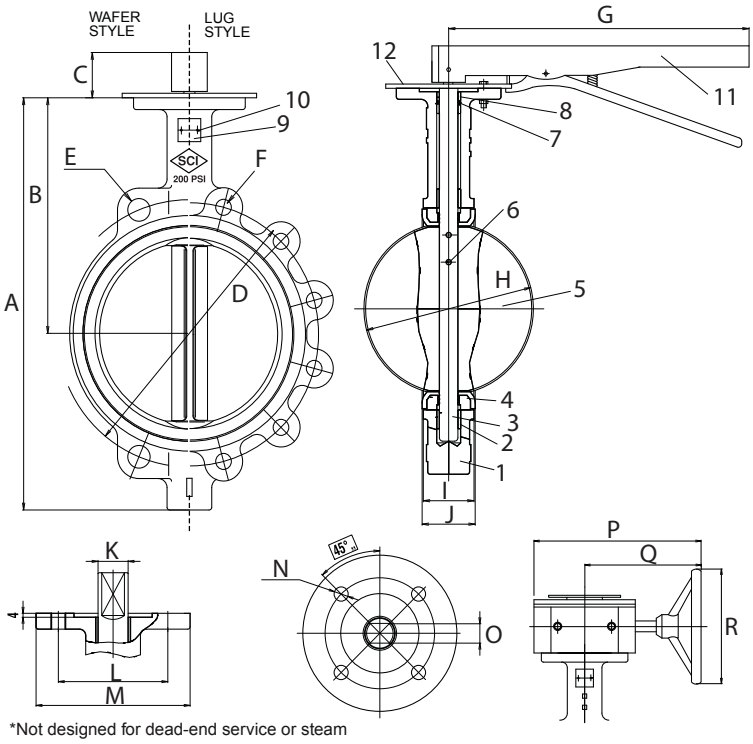

*Not designed for dead-end service or steam

No.	Part	Material
1	Wafer Body	Cast Iron ASTM A126
1	Lug Body	Ductile Iron ASTM A536
2	Bushing	PTFE
3	Stem	ASTM A582 SS416 ASTM A276 SS316 w/ SS316 Disc
4	Liner	Buna-N or EPDM
5	Disc	Aluminium Bronze ASTM C954 Ductile Iron Nickel Plated ASTM A536 SS316 / CF8M ASTM A276
6	Taper Pin	SS316 ASTM A276
7	O-ring	Buna-N or EPDM
8	Bushing	PTFE
9	Plate Rivet	Aluminium
10	Name Plate	Aluminium
11	Handle	Malleable Iron

Size	A	B	C	D	E	F	G	H	I	J	K	L	M	N	O	P	Q	R	Cap Screw
IN	IN	IN	IN	IN	IN		IN	IN	IN	IN	IN	IN	IN	IN	IN	IN	IN	IN	Length (lug)
2	9.5	6.3	1.3	4.75	0.75	4 x 5/8"-11 UNC	10.5	2.1	1.7	1.8	0.50	1.97	2.6	0.28	0.40	7.9	5.8	5.9	1.25
2-1/2	10.4	6.9	1.3	5.50	0.75	4 x 5/8"-11 UNC	10.5	2.5	1.8	1.9	0.50	1.97	2.6	0.28	0.40	7.9	5.8	5.9	1.50
3	10.9	7.1	1.3	6.00	0.75	4 x 5/8"-11 UNC	10.5	3.1	1.8	1.9	0.50	1.97	2.6	0.28	0.40	7.9	5.8	5.9	1.50
4	12.4	7.9	1.3	7.50	0.75	8 x 5/8"-11UNC	10.5	4.1	2.1	2.2	0.62	2.76	3.5	0.39	0.47	7.9	5.8	5.9	1.75
5	13.4	8.4	1.3	8.50	0.88	8 x 3/4"-10UNC	10.5	4.9	2.1	2.3	0.74	2.76	3.5	0.39	0.55	7.9	5.8	5.9	1.75
6	14.4	8.9	1.3	9.50	0.88	8 x 3/4"-10UNC	10.5	6.1	2.2	2.3	0.74	2.76	3.5	0.39	0.55	7.9	5.8	5.9	2.00
8	17.1	10.2	1.6	11.75	0.88	8 x 3/4"-10UNC	14.1	8.0	2.4	2.5	0.87	4.02	4.9	0.47	0.66	12.4	9.4	11.8	2.25
10	19.5	11.5	1.6	14.25	1.00	12 x 7/8"- 9UNC	14.1	9.9	2.6	2.8	1.12	4.02	4.9	0.47	0.86	12.4	9.4	11.8	2.25
12	22.8	13.3	1.6	17.00	1.00	12 x 7/8"- 9UNC	14.1	11.9	3.0	3.2	1.24	4.02	4.9	0.47	0.94	12.2	8.9	11.8	2.50
14	25.0	14.5	1.8	18.75	1.12	12 x 1"- 8UNC	n/a	13.1	3.0	3.1	1.24	4.02	4.9	0.47	0.94	12.2	8.9	11.8	2.50
16	27.9	15.7	2.0	21.25	1.12	12 x 1"- 8UNC	n/a	15.3	3.4	3.5	1.31	5.51	6.9	0.71	1.10	15.7	10.6	11.8	2.50

Example Fig: 0160WSEL040
Description: Wafer style - 316 Disc - EPDM Seat - Lever Handle - 4"

Valve Style		Disc Material		Seat		Operator		Size	
0160W	Wafer	S	316 Stainless steel	E	EPDM	L	10 Position Lever Handle	020	2
0160L	Lug	D	Nickel Plated Ductile Iron	N	Buna-N	O	Gear Operator	024	2-1/2
		A	Aluminum Bronze*					030	3
								040	4
								050	5
								060	6
								080	8
								010	10
								012	12
								014	14
								016	16

Example Fig: 0160XT020240
Description: Extension - 2" Valve - 24" Length

Extension Kit		Valve Size		Length	
0160XT	Extension Kit	020	2	240	24
		024	2-1/2	360	36
		030	3	480	48
		040	4	600	60
		050	5	720	72
		060	6		
		080	8		
		010	10		
		012	12		
		014	14		
		016	16		

Fliteway Technologies, Inc.

Feed Pump VFD - Control Panel

2129 East Birchwood Ave. Cudahy, WI 53110

(414) 483-5600 1-800-236-3580 FAX (414) 483-1957

FEED PUMP SKID #1

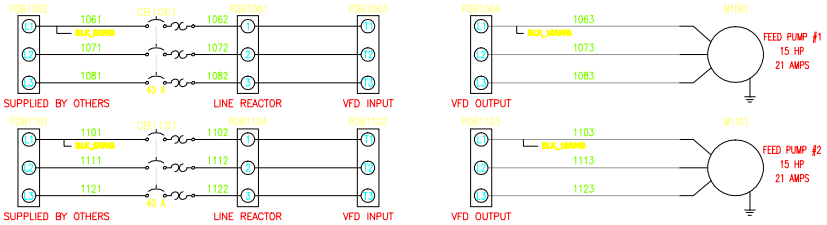

HIGH VOLTAGE PANEL

VFD FEED PUMP #1 WIRING

VFD_TB_12	VFD FAULT - PROVIDED OVER ETHERNET
VFD_TB_13	
VFD_TB_15	VFD RUNNING - PROVIDED OVER ETHERNET
VFD_TB_16	
VFD_TB_25	N
VFD_TB_28	120VAC VFD RUN SIGNAL (FROM MCP)

VFD FEED PUMP #2 WIRING

VFD_TB_12	VFD FAULT - PROVIDED OVER ETHERNET
VFD_TB_13	
VFD_TB_15	VFD RUNNING - PROVIDED OVER ETHERNET
VFD_TB_16	
VFD_TB_25	N
VFD_TB_28	120VAC VFD RUN SIGNAL (FROM MCP)

LOW VOLTAGE JUNCTION BOX

LOW VOLTAGE JBOX

HHL_F/S	120VAC OR 24VDC CONTROL POWER
HHL_F/S	TANK HHL ALARM (DRY CONTACT)
LL_F/S	
LL_F/S	TANK LLL (DRY CONTACT)
PRS._SW	
PRS._SW	HIGH PRESSURE SWITCH ALARM (N.O. DRY CONTACT)
FLOW_METER	24VDC CONTROL POWER
FLOW_METER	FLOW METER 4-20mA SIGNAL
FLOW_METER	FLOW METER SHIELD WIRE
P1_THRM_OL	120VAC CONTROL POWER
P1_THRM_OL	FEED PUMP #1 MOTOR THERMAL OVERLOAD WIRED TO VFD, VIEWED OVER ETHERNET
P2_THRM_OL	
P2_THRM_OL	FEED PUMP #2 MOTOR THERMAL OVERLOAD WIRED TO VFD, VIEWED OVER ETHERNET
LVL_TRANS	24VDC CONTROL POWER
LVL_TRANS	LEVEL TRANSMITTER 4-20mA SIGNAL
LVL_TRANS	LEVEL TRANSMITTER SHIELD WIRE

TREAT WATER PUMP SKID #2

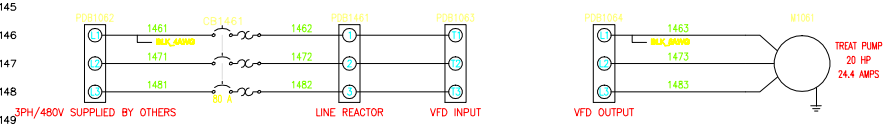

HIGH VOLTAGE PANEL

VFD TREAT PUMP WIRING

VFD_TB_12	VFD FAULT - PROVIDED OVER ETHERNET
VFD_TB_13	
VFD_TB_15	VFD RUNNING - PROVIDED OVER ETHERNET
VFD_TB_16	
VFD_TB_25	N
VFD_TB_28	120VAC VFD RUN SIGNAL (FROM MCP)

LOW VOLTAGE JUNCTION BOX

LOW VOLTAGE JBOX

HHL_F/S	120VAC OR 24VDC CONTROL POWER
HHL_F/S	TANK HHL ALARM (DRY CONTACT)
LL_F/S	
LL_F/S	TANK LLL (DRY CONTACT)
PRS._SW	
PRS._SW	HIGH PRESSURE SWITCH ALARM (N.O. DRY CONTACT)
FM_24V	24VDC CONTROL POWER
FM_TR	FLOW METER 4-20mA SIGNAL
FM_S	FLOW METER SHIELD WIRE
TP_THRM_OL	120VAC CONTROL POWER
TP_THRM_OL	TREATMENT PUMP MOTOR THERMAL OVERLOAD WIRED TO VFD, VIEWED OVER ETHERNET
LVL_TRANS	24VDC CONTROL POWER
LVL_TRANS	LEVEL TRANSMITTER 4-20mA SIGNAL
LVL_TRANS	LEVEL TRANSMITTER SHIELD WIRE

THIS PRINT AND ITS CONTENTS ARE THE PROPERTY OF FLITEWAY AND MUST NOT BE USED FOR ANY PURPOSE NOT AUTHORIZED BY FLITEWAY. DO NOT DISCLOSE, REPRODUCE OR OTHERWISE USE THIS PRINT OR ITS CONTENTS IN ANY MANNER DETRIMENTAL TO THE INTEREST OF FLITEWAY WITHOUT FLITEWAY'S PRIOR WRITTEN CONSENT. FLITEWAY RESERVES ALL RIGHTS OF DESIGN AND INVENTION TO THE EXTENT PERMITTED BY LAW.

CAD SYSTEM	ACADE
SCALE	1:1
UNITS	IN
FORMAT	D

Fliteway Technologies, Inc.
2129 East Birchwood Ave.
Cudahy, WI 53110

DRAWN BY	Josh
Q #	Q14617 R2
DESIGNED FOR	TECHSAS, Inc.
DESCRIPTION	
Drawing Number	

PLOTTED : 12-16-2014

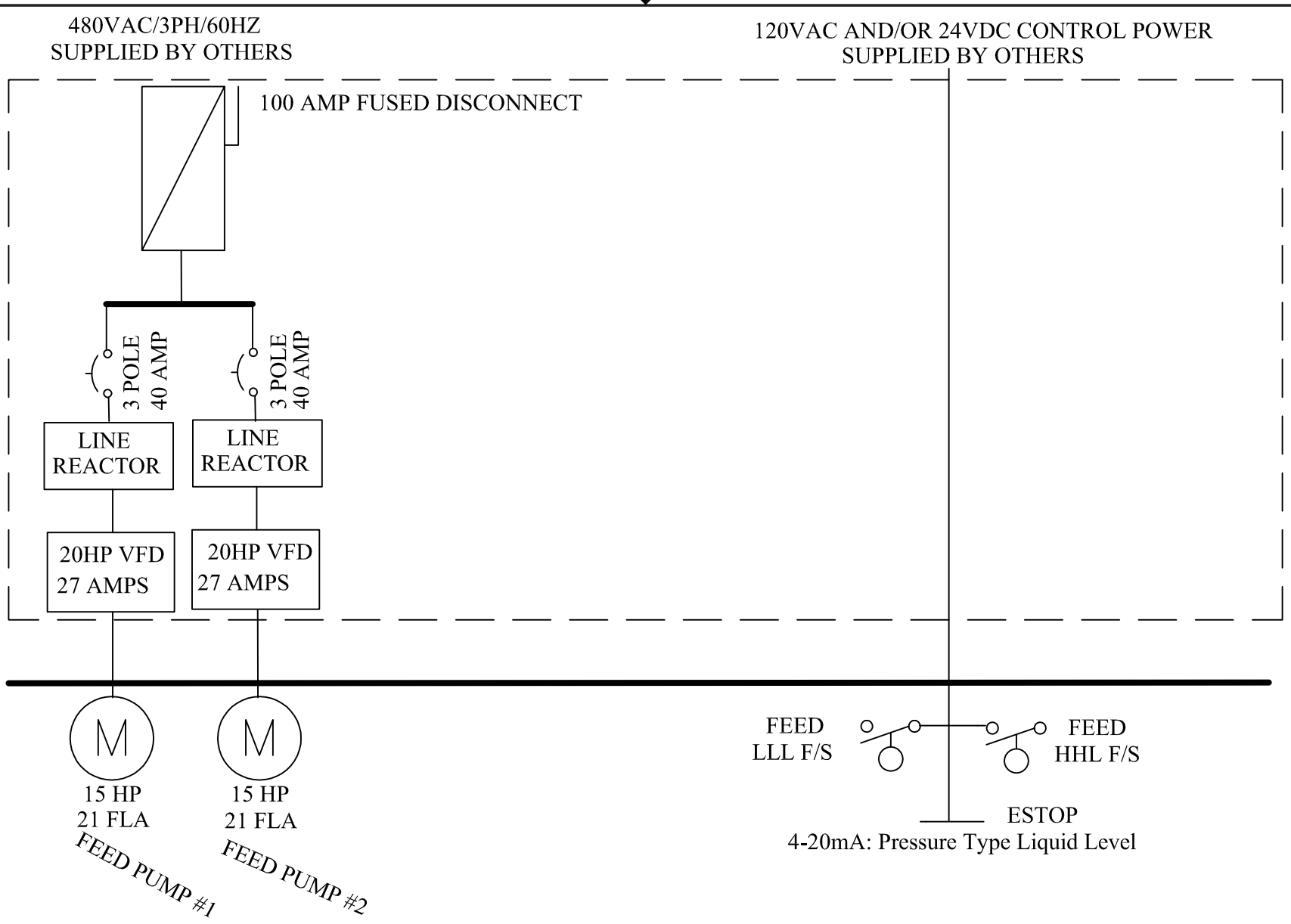

THIS DRAWING IS THE PROPERTY OF
Fliteway Technologies, Inc
2129 East Birchwood Avenue
Cudahy, WI 53110
414.483.5600 414.483.1957
AND IS NOT BE REPRODUCED
WITHOUT WRITTEN PERMISSION

ONE LINE ELECTRICAL DIAGRAM

FEED PUMP SKID

9/23/16

TECHSAS, Inc

SIZE	FSCM NO.	DWG NO.	REV
		Q14617	2

SCALE NONE | SHEET

Allen-Bradley

PowerFlex 700 Adjustable Frequency AC Drive

Topic	Page
Product Overview	2
Certifications and Specifications	7
Design Considerations	12
Drive, Fuse and Circuit Breaker Ratings	24
Cable Recommendations	33
Power Wiring	34
I/O Wiring	44
Mounting	49
Dimensions and Weights	53
PowerFlex 700 Packaged Drives	77
Drive Options	78

LISTEN. THINK. SOLVE.®

Allen-Bradley • Rockwell Software

Rockwell Automation

Additional Resources

These documents contain additional information concerning related products from Rockwell Automation.

Resource	Description
PowerFlex 700 Adjustable Frequency AC Drive Installation Instructions – Frames 0…6, publication 20B-IN0019	Provides detailed information about installation and start-up.
PowerFlex 700 Adjustable Frequency AC Drive Installation Instructions – Frames 7…10, publication 20B-IN0014	
PowerFlex 700 Standard Control User Manual, publication 20B-UM001	Provides detailed information on: • Parameters and programming • Faults, alarms, and troubleshooting
PowerFlex 700 Vector Control User Manual (v4.001 & up), publication 20B-UM002	
PowerFlex 70 and PowerFlex 700 Reference Manual, publication PFLEX-RM001	Provides detailed application specific information for programming and configuring the PowerFlex 700 drive.
PowerFlex 70 Enhanced Control and PowerFlex 700 Vector Control Reference Manual, publication PFLEX-RM004	
Wiring and Grounding Guidelines for Pulse Width Modulated (PWM) AC Drives, publication DRIVES-IN001	Provides basic information needed to properly wire and ground PWM AC drives.
Safety Guidelines for the Application, Installation and Maintenance of Solid State Control, publication SGI-1.1	Provides general guidelines for the application, installation, and maintenance of solid-state control.
Preventive Maintenance of Industrial Control and Drive System Equipment, publication DRIVES-TD001	Provides a guide to performing preventive maintenance.
Guarding Against Electrostatic Damage, publication 8000-4.5.2	Provides practices for guarding against electrostatic damage (ESD).
Product Certifications website, http://ab.com	Provides declarations of conformity, certificates, and other certification details.

You can view or download publications at http://www.rockwellautomation.com/literature/. To order paper copies of technical documentation, contact your local Allen-Bradley distributor or Rockwell Automation sales representative.

Product Overview

The PowerFlex 700 AC drive offers outstanding performance in an easy-to-use drive that you have come to expect from Rockwell Automation. This world-class performance comes in a small and competitively priced package. The PowerFlex 700 AC drive is designed to control three-phase induction motors in applications with requirements ranging from the simplest speed control to the most demanding torque control. The drive has volts per hertz, sensorless vector and vector control. Vector control includes Allen-Bradley's patented Force™ Technology which provides world class motor control.

Flexible Packaging and Mounting

- **IP20, NEMA / UL Type 1** – For conventional mounting inside or outside a control cabinet. Conduit plate is removable for easy installation and replacement without disturbing conduit.
- **IP54, NEMA / UL Type 12** – Stand-alone, wall mount drives are available for dust tight applications with power ratings from 75 to 200 Hp (Frames 5 & 6).
- **IP54, NEMA / UL Type 12** – Flange mount drives with an IP00, NEMA / UL Type Open front. These can be installed in a user supplied cabinet to meet IP54, NEMA / UL Type 12. This allows the majority of heat to be exhausted out the back of the cabinet while keeping the cabinet protected. Power ratings range from 75 to 700 Hp (Frames 5...10).
- **Zero Stacking**™ – Frame 0...6 drives can be mounted next to each other with no reduction of surrounding air temperature rating (50°C). This unique bookshelf design also allows access to one drive without disturbing another.

Space Saving Hardware Features

- **Integral EMC Filtering** plus built-in DC bus choke common mode cores and common mode capacitors provides a compact, all-in-one package solution for meeting EMC requirements, including CE in Europe. Frames 0...6 only (Frames 7...10 meet CE when installed per recommendations).
- **Internal Communications** allow the user to integrate the drive into the manufacturing process. Status indicators for all internal communication options are visible on the cover for easy setup and monitoring of drive communications. Users can easily manage information from shop floor to top floor and seamlessly integrate their complete system as they control, configure and collect data.
- **Integral Dynamic Brake Transistor** delivers a cost effective means of switching regenerative energy without costly external chopper circuits. These internal transistors are available in power ratings from 0.5 to 200 Hp.
- **Internal Dynamic Brake Resistor** (up to 25 Hp) requires no extra panel space, and supplies a large amount of braking torque for short periods.

Easy to Use Human Interface Tools

The PowerFlex 7-Class AC drives provide common Human Interface tools that are familiar and easy to use. These include the LCD Human Interface modules and PC-based configuration tools.

- LCD Human Interface modules provide:
  - Large and easy to read 7 line x 21 character backlit display
  - Variety of languages (English, French, German, Italian, Spanish, Portuguese, Dutch)
  - Alternate function keys for shortcuts to common tasks
  - “Calculator-like” number pad for fast and easy data entry (Full Numeric version only)
  - Control keys for local start, stop, speed, and direction
  - Remote versions for panel mount application

Outstanding Control and Performance

Multiple motor control algorithms allow performance matched to the application need:

- **Volts/Hertz** for simple Fan and Pump applications.
- **Sensorless Vector** for high torque production over a wide speed range.
- **Vector** for outstanding torque regulation and excellent low speed/zero speed performance (w/Vector Control cassette).

The PowerFlex 700 drive's Vector Control uses Allen-Bradley's patented Force™ Technology which provides excellent low-speed performance - whether it is operated with or without feedback. While this industry-leading control provides the highest level of drive performance, it is as easy to use as any general purpose drive available.

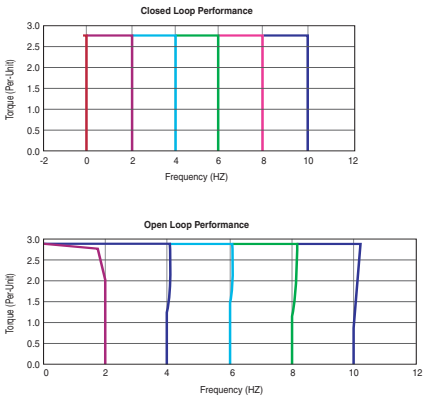

Drives Features

- Fast-acting **Current Limit** and **Bus Voltage Regulation** result in maximum accel/decel without tripping.
- **High speed analog inputs** improve drive response to torque or speed commands.
- **Programming flexibility** allows parameters to be linked within the drive.
- **Flying Start** delivers smooth and instantaneous connection into rotating loads, regardless of commanded direction, without the need for any speed feedback.
- **Integral Process PI Control** can eliminate the need for a separate process loop controller.
- **Inertia Ride-Through** offers tripless operation during a prolonged power outage by using the rotating energy stored in high inertia, low-friction loads.
- **Position Indexer/Speed Profiler** uses a 16 step indexer to provide point-to-point positioning or velocity profiling based on encoder counts, digital inputs, parameter levels or time.
- **TorqProve**™ assures control of the load when transferring control between the drive and a mechanical brake.
- **Speed Regulation** - Open Loop or Closed Loop
  - **Slip Compensation** delivers a minimum 0.5% speed regulation without feedback hardware.
  - **Droop** allows drives to load share without fighting each other.
  - **Encoder Feedback** provides up to 0.001% speed regulation for the tightest application requirements.
- **Torque Regulation** - Open Loop or Closed Loop
  - **Open Loop** torque regulation provides ±5% regulation.
  - **Encoder Feedback** provides ±2% regulation and the ability to hold full load at zero speed.

Unsurpassed Capability in Network Communications

PowerFlex drives are fully compatible with the wide variety of Allen-Bradley DPI™ communication adapters, offering the following benefits:

BACnet®	ControlNet™	DeviceNet™	EtherNet/IP™	LonWorks™	Modbus RTU	PROFIBUS™	Remote I/O(1)	RS485 DF1	USB	Description
	✔	✔	✔							**(Unconnected Messaging)** permits other network devices (e.g. PanelView™) to communicate directly to a drive without routing the communication through the network scanner.
✔	✔	✔	✔					✔	✔	**Adapter Routing** - Plug PC into one drive and talk to all other Allen-Bradley drives on same network, without being routed through network scanner.
✔	✔	✔	✔	✔	✔	✔	✔	✔	✔	Access to 100% of all parameters over the network.
✔		✔	✔			✔				**AutoBaud** capability makes initial connections less problematic.
		✔								**Change of State** significantly reduces network traffic by configuring control messages to be sent only upon customer defined states. Very flexible configuration for each node (Example: "reference must change by more than 5%").
		✔	✔							**Peer Control** provides master-slave type control between drives, where one or more slave drives (consumers) can run based on the status of a master drive (producer), which can also significantly reduce network traffic.
		✔								**ADR (Automatic Device Replacement)** saves significant time and effort when replacing a drive, by allowing the scanner to be configured to automatically detect a new drive and download the required parameter settings.
✔	✔	✔	✔	✔	✔	✔	✔	✔	✔	**Flexible Fault Configuration** - Adapters can be programmed to take fault based actions as ramp to stop, coast-to-stop and hold last state, as well as send user configurable logic control and speed reference values. In addition, different actions can be taken based on whether the network experienced a serious problem (broken cable etc.) versus network idle condition (PLC set to "Program").

(1) This item has Silver Series status. For information, refer to http://www.ab.com/silver.

Catalog Number Explanation

20B	D	2P1	A	3	A	Y	N	A	E	C	0	NN	AD
a	*b*	*c1…c5*	*d*	*e*	*f*	*g*	*h*	*i*	*j*	*k*	*l*	*m*	*n*

a

Drive	
Code	Type
20B	PowerFlex 700

b

Voltage Rating				
Code	Voltage	Ph.	Prechg.	Frames
B	240V AC	3	-	0…6
C	400V AC	3	-	0…10
D	480V AC	3	-	0…10
E	600V AC	3	-	0…6
F	690V AC	3	-	5…6
H	540V DC	-	N	5…6, 10
J	650V DC	-	N	5…6, 10
N	325V DC	-	Y	5…6
P	540V DC	-	Y	5…9
R	650V DC	-	Y	5…9
T	810V DC	-	Y	5…6
W	932V DC	-	Y	5…6

c1

ND Rating				
208/240V, 60 Hz Input				
Code	208V Amps	240V Amps	Hp	Frame
2P2	2.5	2.2	0.5	0
4P2	4.8	4.2	1.0	0
6P8	7.8	6.8	2.0	1
9P6	11	9.6	3.0	1
015	17.5	15.3	5.0	1
022	25.3	22	7.5	1
028	32.2	28	10	2
042	48.3	42	15	3
052	56	52	20	3
070	78.2	70	25	4
080	92	80	30	4
104	120	104	40	5
130	130	130	50	5
154	177	154	60	6
192	221	192	75	6
260	260	260	100	6

c2

ND Rating			
400V, 50 Hz Input			
Code	Amps	kW	Frame
1P3	1.3	0.37	0
2P1	2.1	0.75	0
3P5	3.5	1.5	0
5P0	5.0	2.2	0
8P7	8.7	4.0	0
011	11.5	5.5	0
015	15.4	7.5	1
022	22	11	1
030	30	15	2
037	37	18.5	2
043	43	22	3
056	56	30	3
072	72	37	3
085	85	45	4
105	105	55	5
125	125	55	5
140	140	75	5
170	170	90	6
205	205	110	6
260	260	132	6
292	292	160	7
325	325	180	7
365	365	200	8
415	415	240	8
481	481	280	8
535	535	300	8
600	600	350	8
730	730	400	9
875	875	500	10

c3

ND Rating			
480V, 60 Hz Input			
Code	Amps	Hp	Frame
1P1	1.1	0.5	0
2P1	2.1	1.0	0
3P4	3.4	2.0	0
5P0	5.0	3.0	0
8P0	8.0	5.0	0
011	11	7.5	0
014	14	10	1
022	22	15	1
027	27	20	2
034	34	25	2
040	40	30	3
052	52	40	3
065	65	50	3
077	77	60	4
096	96	75	5
125	125	100	5
156	156	125	6
180	180	150	6
248	248	200	6
292	292	250	7
325	325	250	7
365	365	300	8
415	415	350	8
481	481	400	8
535	535	450	8
600	600	500	8
730	730	600	9
875	875	700	10

c4

ND Rating			
600V, 60 Hz Input			
Code	Amps	Hp	Frame
1P7	1.7	1.0	0
2P7	2.7	2.0	0
3P9	3.9	3.0	0
6P1	6.1	5.0	0
9P0	9.0	7.5	0
011	11	10	1
017	17	15	1
022	22	20	2
027	27	25	2
032	32	30	3
041	41	40	3
052	52	50	3
062	62	60	4
077	77	75	5
099	99	100	5
125	125	125	6
144	144	150	6

20B	D	2P1	A	3	A	Y	N	A	E	C	0	NN	AD
a	*b*	*c1…c5*	*d*	*e*	*f*	*g*	*h*	*i*	*j*	*k*	*l*	*m*	*n*

c5

ND Rating			
690V, 50 Hz Input			
Code	Amps	kW	Frame
052	52	45	5
060	60	55	5
082	82	75	5
098	98	90	6
119	119	110	6
142	142	132	6

d

Enclosure	
Code	Enclosure
A	IP20, NEMA/UL Type 1
F ♠	Open/Flange Mount Front: IP00, NEMA/UL Type Open Back/Heatsink: IP54, NEMA Type 12
N ♣	Open/Flange Mount Front: IP00, NEMA/UL Type Open Back/Heatsink: IP54, NEMA 12
G ♠	Stand-Alone/Wall Mount IP54, NEMA/UL Type 12
U	Roll-In Front: IP00, NEMA/UL Type Open Back/Heatsink: IP54, NEMA 12 Frames 8 & 9 Only

♠ Only available for Frame 5 & Frame 6 drives, 400…690V.

♣ Only available for Frames 7…10.

e

HIM	
Code	Operator Interface
0	Blank Cover
3	LCD Display, Full Numeric Keypad
J ♦	Remote (Panel Mount), IP66, NEMA/UL Type 12 Full Numeric LCD HIM
K ♦	Remote (Panel Mount), IP66, NEMA/UL Type 12 Prog. Only LCD HIM

♦ Available with Frames 5…6 Stand-Alone IP54 drives (Enclosure Code "G").

f

Documentation	
Code	Type
A	Manual
N	No Manual
Q	No Shipping Package (Internal Use Only)

g

Brake	
Code	w/Brake IGBT ‡
Y	Yes
N	No

‡ Brake IGBT is standard on Frames 0-3, optional on Frames 4-6 and not available on Frames 7…10.

h

Internal Braking Resistor	
Code	w/Resistor
Y	Yes ★
N	No

★ Not available for Frame 3 drives or larger.

i

Emission		
Code	CE Filter §	CM Choke
A	Yes	Yes
B #	Yes	No
N	No	No

§ Note: 600V class drives below 77 Amps (Frames 0-4) are declared to meet the Low Voltage Directive. It is the responsibility of the user to determine compliance to the EMC directive. Frames 7…10, 400/480V AC drives (Voltage Rating codes "C" and "D") meet CE certification requirements when installed per recommendations.

Only available for 208…240V Frame 0-3 drives.

j

Comm Slot	
Code	Network Type
C	ControlNet (Coax)
D	DeviceNet
E	EtherNet/IP
N	None

k

Control & I/O		
Code	Control	I/O Volts
A	Standard ♦	24V DC/AC
B	Standard ♦	115V AC
C	Vector Δ	24V DC
D	Vector Δ	115V AC
N	Standard	None

Δ Vector Control Option utilizes DPI Only.

♦ Frame 0…6 drives only.

l

Feedback	
Code	Type
0	None
1	Encoder, 12V/5V

m

Future Use

n

Special Firmware (Frames 0…6 Only)	
Code	Type
AD ♦	60 Hz Maximum
AE ♦	Cascading Fan/Pump Control
AX ♦	82 Hz Maximum
BA ♦	Pump Off (for pump jack)

♦ Must be used with Vector Control option C or D (Position k). Positions m-n are only required when custom firmware is supplied.

Certifications and Specifications

Certifications

Certification [1]	Description	Frames			
		0…4		5…6	7…10
		230…480V	600V		
ABS	American Bureau of Shipping MA Certificate 08-HS303172B-3-PDA for auxiliary services on AB Classed vessels and offshore platforms	✔		✔	
CE	Certified by Rockwell Automation to be in conformity with the essential requirements of the applicable European Directives and the standards referenced below have been applied:				
	2006/95/EC (Low Voltage Directive) EN 50178 Electronic Equipment for use in Power Installations	✔	✔	✔	✔
	2004/108/EC (EMC Directive) EN 61800-3 Adjustable Speed electrical power drive systems - Part 3: EMC requirements and specific test methods.	✔		✔	✔[2]
RCM	Certified by Rockwell Automation to be in conformity with the requirements of the applicable Australian legislation and the standards referenced: IEC 61800-3.	✔		✔	✔
c-UL-us	Listed to UL508C and C22.2 No. 14. Packaged drives may be listed to UL508A.	✔	✔	✔	✔
EAC	Low Voltage TR CU 004/2011 EMC TR CU 020/2011	✔	✔	✔	✔
EPRI /SEMIF47	EPRI Quality Star Certificates SEMIF47.115 and SEMIF47.127 for SEMI F47 compliance, only 480V units tested	✔		✔	
Functional Safety	EC-Type-Examination Certificate TUV 05 ATEX 7153 for directive 94/9/EC: Safe turn off of certified ATEX motors used in Group II Category (2) GD potentially explosive atmospheres.	✔	✔	✔	✔
Korean KC Registration	KCC-REM-RAA-20B Refer to the certificate of registration for specific drive catalog numbers that have this certification.	✔	✔	✔	✔
Lloyd's Register	Lloyd's Register Type Approval Certificate 08-HS303172B-3-PDA (marine certification)	✔		✔	
Trentec	Tested by Trentec to be compliant with AC156 Acceptance Criteria for Seismic Qualification Testing of Nonstructural Components and 2003 International Building Code for worst-case seismic level for USA excluding site class F	✔	✔	✔	
Designed to Meet Applicable Requirements	CMAA Specification #70 (Crane Manufacturers of America Assoc.)	✔	✔	✔	✔
	NFPA 70 – US National Electrical Code	✔	✔	✔	✔
	NEMA ICS 7.1 – Safety Standards for Construction and Guide for Selection, Installation, and Operation of Adjustable Speed Drive Systems	✔	✔	✔	✔
	IEC 61800-2 – Adjustable Speed Electrical Power Drive Systems - Part 2: General Requirements - Rating specifications for low voltage adjustable frequency AC power drive systems.	✔	✔	✔	✔

(1) See the product certifications website, http://www.rockwellautomation.com/products/certification for declarations of conformity, certificates, and other certification details.

(2) Frames 7…10 provided as IP00 or NEMA / UL Open style must be installed in a supplementary enclosure which provides adequate attenuation of radiated emissions in order to be compliant with EN 61800-3.

Environmental

Category	Specification				
Environment	Altitude:	1000 m (3300 ft) max. without derating			
	Maximum Surrounding Air Temperature without Derating - IP20, NEMA / UL Type Open: Frames 0…6 Frames 7…10	 0…50 °C (32…122 °F), typical. See Installation Instructions for details. 0…40 °C (32…104 °F) for chassis (heatsink) 0…65 °C (32…149 °F) for control (front of backplane)			
	Storage Temperature (all const.):	-40…70 °C (-40…158 °F)			
	Atmosphere:	**Important:** Drive **must not** be installed in an area where the ambient atmosphere contains volatile or corrosive gas, vapors or dust. If the drive is not going to be installed for a period of time, it must be stored in an area where it will not be exposed to a corrosive atmosphere.			
	Relative Humidity:	5 to 95% non-condensing			
	Shock:	15G peak for 11ms duration (±1.0 ms)			
	Vibration:	0.152 mm (0.006 in.) displacement, 1G peak			
	Surrounding Environment Pollution Degree Pollution Degree 1 & 2: Pollution Degree 3 & 4: (See page 11 for descriptions of each pollution degree rating.)	 All enclosures acceptable. Enclosure that meets or exceeds IP54, NEMA / UL Type 12 required.			
	Sound:	Frame	Fan Velocity	Sound Level	Note: Sound pressure level is measured at 2 meters.
		0	30 CFM	58 dB	
		1	30 CFM	59 dB	
		2	50 CFM	57 dB	
		3	120 CFM	61 dB	
		4	190 CFM	59 dB	
		5	200 CFM	71 dB	
		6	300 CFM	72 dB	
		7	756 CFM	74 dB	
		8	1200 CFM	78 dB	
		9	2800 CFM	82 dB	
		10 Inv.	1850 CFM	78 dB	
		10 Cnv.	1200 CFM	78 dB	

Technical Specifications

Category	Specification						
Protection	**Drive**	200…208V	240V	380/400V	480V	600V Frames 0…4	600/690V Frames 5…6
	AC Input Overvoltage Trip:	285V AC	285V AC	570V AC	570V AC	716V AC	818V AC
	AC Input Undervoltage Trip:	120V AC	138V AC	233V AC	280V AC	345V AC	345V AC
	Bus Overvoltage Trip:	405V DC	405V DC	810V DC	810V DC	1013V DC	1162V DC
	Bus Undervoltage Shutoff/Fault:	153V DC	153V DC	305V DC	305V DC	381V DC	437V DC
	Nominal Bus Voltage:	281V DC	324V DC	540V DC	648V DC	810V DC	932V DC
	All Drives						
	Heat Sink Thermistor:	Monitored by microprocessor overtemp trip					
	Drive Overcurrent Trip Software Overcurrent Trip: Hardware Overcurrent Trip:	 200% of rated current (typical) 220…300% of rated current (dependent on drive rating)					
	Line transients:	up to 6000 volts peak per IEEE C62.41-1991					
	Control Logic Noise Immunity:	Showering arc transients up to 1500V peak					
	Power Ride-Thru:	15 milliseconds at full load					
	Logic Control Ride-Thru:	0.5 seconds minimum, 2 seconds typical					
	Ground Fault Trip:	Phase-to-ground on drive output					
	Short Circuit Trip:	Phase-to-phase on drive output					
Electrical	Voltage Tolerance:	See page 12 for full power and operating range					
	Input Frequency Tolerance:	47…63 Hz					
	Input Phases:	Three-phase input provides full rating for all drives. Single-phase operation possible on certain drives and provides 50% of rated current (see Installation Instructions for details). Frames 0…7: Drive can be supplied as 6 pulse or 18 pulse in an engineered package.					
	Displacement Power Factor:	0.98 across entire speed range					
	Efficiency:	97.5% at rated amps, nominal line volts					
	Maximum Short Circuit Rating:	200,000 Amps symmetrical					
	Actual Short Circuit Rating:	Determined by AIC rating of installed fuse/circuit breaker					
	Drive to Motor Power Ratio Minimum Maximum	 Recommended not less than 1:2 ratio Recommended not greater than 2:1 ratio					

Category	Specification	
Control	Method:	Sine coded PWM with programmable carrier frequency. Ratings apply to all drives (refer to the *Derating Guidelines* in the PowerFlex Reference Manual). The drive can be supplied as 6 pulse or 18 pulse in a configured package.
	Carrier Frequency:	2, 4, 8, and 10 kHz. Drive rating based on 4 kHz. See the Input Protection Device tables in the Installation Instructions for exceptions.
	Output Voltage Range:	0 to rated motor voltage
	Output Frequency Range:	Standard Control – 0 to 400 Hz., Vector Control – 0 to 420 Hz
	Frequency Accuracy Digital Input: Analog Input:	 Within ±0.01% of set output frequency Within ±0.4% of maximum output frequency
	Frequency Control:	Speed Regulation - w/Slip Compensation (Volts per Hertz Mode) 0.5% of base speed across 40:1 speed range, 40:1 operating range 10 rad/sec bandwidth
		Speed Regulation - w/Slip Compensation (Sensorless Vector Mode) 0.5% of base speed across 80:1 speed range, 80:1 operating range 20 rad/sec bandwidth
		Speed Regulation - w/Feedback (Sensorless Vector Mode) 0.1% of base speed across 80:1 speed range, 80:1 operating range 20 rad/sec bandwidth
	Speed Control:	Speed Regulation - w/o Feedback (Vector Control Mode) 0.1% of base speed across 120:1 speed range, 120:1 operating range 50 rad/sec bandwidth
		Speed Regulation - w/Feedback (Vector Control Mode) 0.001% of base speed across 120:1 speed range, 1000:1 operating range, 250 rad/sec bandwidth
	Torque Regulation:	Torque Regulation - w/o Feedback ±5%, 600 rad/sec bandwidth
		Torque Regulation - w/Feedback ±2%, 2500 rad/sec bandwidth
	Selectable Motor Control:	Sensorless Vector with full tuning. Standard V/Hz with full custom capability. PF700 adds Vector Control.
	Stop Modes:	Multiple programmable stop modes including - Ramp, Coast, DC-Brake, Ramp-to-Hold and S-curve.
	Accel/Decel:	Two independently programmable accel and decel times. Each time may be programmed from 0…3600 seconds in 0.1 second increments.
	Intermittent Overload:	110% Overload capability for up to 1 minute, 150% Overload capability for up to 3 seconds.
	Current Limit Capability:	Proactive Current Limit programmable from 20…160% of rated output current. Independently programmable proportional & integral gain.
	Motor Overload Protection Frames 0…6 Standard Control: Frames 0…6 Vector Control: Frames 7…10 Vector Control:	 PowerFlex 700 drives with standard control, identified by an N, A, or B in position 15 of the catalog number, only provide Class 10 motor overload protection according to NEC article 430. They do not provide speed sensitive overload protection, thermal memory retention and motor over-temperature sensing according to NEC article 430.126 (A) (2). If such protection is needed in the end-use product, it must be provided by additional means. PowerFlex 700 drives with vector control, identified by a C or D in position 15 of the catalog number, provide class 10 motor overload protection according to NEC article 430 and motor over-temperature protection according to NEC article 430.126 (A) (2). UL 508C File E59272. Class 10 motor overload protection according to NEC article 430 and motor over-temperature protection according to NEC article 430.126 (A)(2). UL 508C File E59272.

Category	Specification					
Control (continued)	Digital/Analog Input Latency	Signal		Motor Control	Latency	
					Min.	Max	Typical
		Digital Input	Start	FVC	8.4 ms	10.4 ms	8.4 ms
				SVC	9.2 ms	16.0 ms	9.2 ms
			Stop	FVC	10.0 ms	12.4 ms	10.4 ms
				SVC	10.0 ms	12.0 ms	10.4 ms
		Analog Input	Torque 4 kHz PWM	FVC	772 µs	1.06 ms	840 µs
			Torque 2 kHz PWM	FVC	1.008 ms	1.46 ms	1.256 ms
			Speed	FVC	4.6 ms	8.6 ms	4.8 ms
			Speed	SVC	4.8 ms	12.4 ms	6.4 ms
Encoder	Type:	Incremental, dual channel					
	Supply:	12V, 250 mA. 12V, 10 mA minimum inputs isolated with differential transmitter, 250 kHz maximum.					
	Quadrature:	90°, ±27 degrees at 25 degrees C.					
	Duty Cycle:	50%, +10%					
	Requirements:	Encoders must be line driver type, quadrature (dual channel) or pulse (single channel), 8…15V DC output (4…6V DC when jumpers are in 5V position), single-ended or differential and capable of supplying a minimum of 10 mA per channel. Maximum input frequency is 250 kHz. The Encoder Interface Board accepts 12V DC square-wave with a minimum high state voltage of 7.0V DC. With the jumpers in the 5V position, the encoder will accept a 5V DC square-wave with a minimum high state voltage of 3.0V DC. In either jumper position, the maximum low state voltage is 0.4V DC.					

Pollution Degree Ratings According to EN 61800-5-1

Pollution Degree	Description
1	No pollution or only dry, non-conductive pollution occurs. The pollution has no influence.
2	Normally, only non-conductive pollution occurs. Occasionally, however, a temporary conductivity caused by condensation is to be expected, when the drive is out of operation.
3	Conductive pollution or dry non-conductive pollution occurs, which becomes conductive due to condensation, which is to be expected.
4	The pollution generates persistent conductivity caused, for example, by conductive dust, rain or snow.

Design Considerations

Input Voltage Tolerance

Drive Rating	Nominal Line Voltage	Nominal Motor Voltage	Drive Full Power Range	Drive Operating Range
200…240	200	200*	200…264	180…264
	208	208	208…264	
	240	230	230…264	
380…480	380	380*	380…528	342…528
	400	400	400…528	
	480	460	460…528	
500…600 (Frames 0…4 Only)	600	575*	575…660	432…660
500…690 (Frames 5 & 6 Only)	600	575*	575…660	475…759
	690	690	690…759	475…759

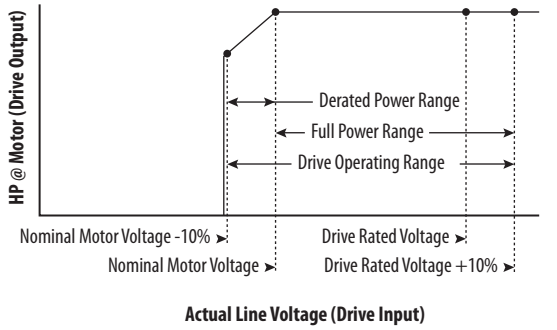

Drive Full Power Range = Nominal Motor Voltage to Drive Rated Voltage +10%.
Rated current is available across the entire Drive Full Power Range

Drive Operating Range = Lowest* Nominal Motor Voltage –10% to Drive Rated Voltage +10%.
Drive Output is linearly derated when Actual Line Voltage is less than the Nominal Motor Voltage

EXAMPLE Calculate the maximum power of a 5 Hp, 460V motor connected to a 480V rated drive supplied with 342V Actual Line Voltage input.

- Actual Line Voltage / Nominal Motor Voltage = 74.3%
- 74.3% × 5 Hp = 3.7 Hp
- 74.3% × 60 Hz = 44.6 Hz

At 342V Actual Line Voltage, the maximum power the 5 Hp, 460V motor can produce is 3.7 Hp at 44.6 Hz.

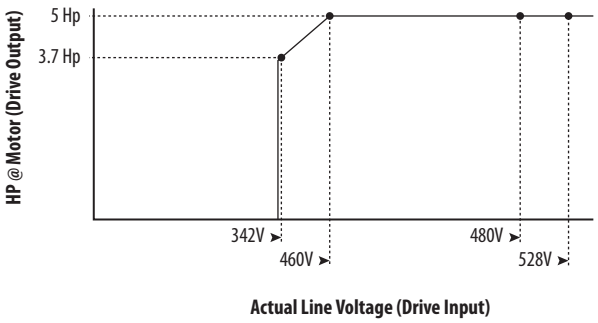

Approximate Watts Loss

The following tables list the watts loss data for drives running at full load, full speed and default carrier frequency.

Internal watts are those dissipated by the control structure of the drive and will be dissipated into the cabinet regardless of mounting style. External watts are those dissipated directly through the heatsink and will be outside the cabinet for flange mount and inside the cabinet for other mounting types.

Watts Loss – Frames 0...6

Voltage	ND Hp/kW	External Watts	Internal Watts	Total Watts Loss[1]
IP20, NEMA / UL Type 1				
240V	0.5	9	37	46
	1	22	39	61
	2	38	39	77
	3	57	41	98
	5	97	82	179
	7.5	134	74	208
	10	192	77	269
	15	276	92	368
	20	354	82	436
	25	602	96	698
	30	780	96	876
	40	860	107	967
	50	1132	138	1270
	60	1296	200	1496
	75	1716	277	1993
	100	1837	418	2255
400V	0.37	11	42	53
	0.75	19	44	63
	1.5	31	45	76
	2.2	46	46	93
	4	78	87	164
	5.5	115	79	194
	7.5	134	84	218
	11	226	99	326
	15	303	91	394
	18.5	339	102	441
	22	357	103	459
	30	492	117	610
	37	568	148	717
	45	722	207	930
	55	821	286	1107
	55	1130	397	1527
	90	1402	443	1845
	110	1711	493	2204
	132	1930	583	2513

Voltage	ND Hp/kW	External Watts	Internal Watts	Total Watts Loss[1]
480V	0.5	11	42	53
	1	19	44	63
	2	31	45	76
	3	46	46	93
	5	78	87	164
	7.5	115	79	194
	10	134	84	218
	15	226	99	326
	20	303	91	394
	25	339	102	441
	30	357	103	459
	40	492	117	610
	50	568	148	717
	60	722	207	930
	75	821	286	1107
	100	1130	397	1527
	125	1402	443	1845
	150	1711	493	2204
	200	1930	583	2513
600V	0.5	9	37	46
	1	14	40	54
	2	25	40	65
	3	41	42	83
	5	59	83	142
	7.5	83	75	157
	10	109	77	186
	15	177	93	270
	20	260	83	343
	25	291	95	385
	30	324	95	419
	40	459	109	569
	50	569	141	710
	60	630	195	825
	75	1053	308	1361
	100	1467	407	1874
	125	1400	500	1900
	150	1668	612	2280
690V	45	894	141	1034
	55	1056	195	1251
	75	1105	308	1412
	90	1389	407	1796
	110	1283	500	1783
	132	1592	612	2204

Voltage	ND Hp/kW	External Watts	Internal Watts	Total Watts Loss(1)
IP54, NEMA / UL Type 12				
480V	75	873	234	1107
	100	1237	290	1527
	125	1563	282	1845
	150	1874	330	2204
	200	2100	413	2513
600V	75	1091	270	1361
	100	1537	337	1874
	125	1584	316	1900
	150	1895	385	2280

(1) Worst case condition including Vector Control board, HIM, and Communication Module.

Watts Loss – Frames 7…10

Voltage	Frame	Hp Rating		Dissipation (Watts)(1)					
				AC Input			DC Input		
		ND	HD	External	Internal	Total	External	Internal	Total
IP20, NEMA / UL Type 1									
400/480V	7	250	200	3422	514	3936	3098	497	3595
		250	250	4224	618	4842	3848	599	4447
	8	300	250	3125	569	3694	2698	547	3245
		350	300	3588	681	4269	3091	655	3746
		400	350	4284	850	5133	3692	816	4510
		450	400	4850	1000	5850	4178	965	5143
		500	450	5278	2010	7288	4506	1969	6475
	9	600	500	8740	2270	11010	7752	2218	9970
	10	700	600	8595	2339	10934	7470	2280	9750

(1) Worst case condition including Vector Control board, HIM, and Communication Module.

Derating Guidelines

Altitude and Efficiency

Frame	Type	Derate
All	Altitude	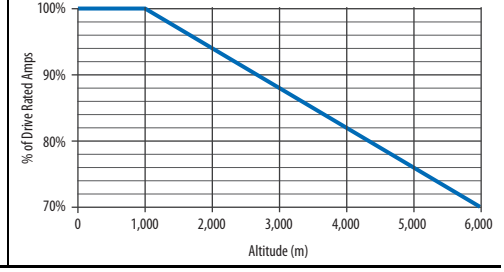

Frame	Type	Derate
All	Efficiency (typical)	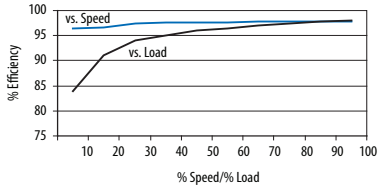

Ambient Temperature/Load – 240V AC

240 Volt Power Rating			Derating — — — 2 kHz ····· 4 kHz ———
ND Hp	**HD Hp**	**Cont. Amps**	
0.5…5.0	0.33…3.0	2.2…15.3	None
10…15	7.5…10	28…42	None
25	20	70	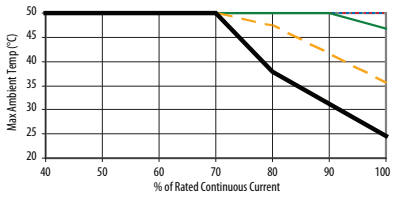
40	30	104 (80)	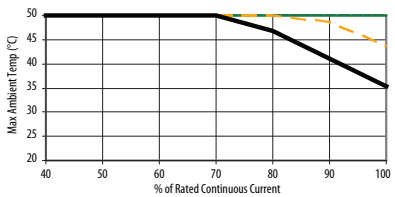
60	50	154 (130)	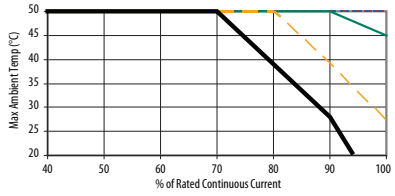
100	75	260 (205)	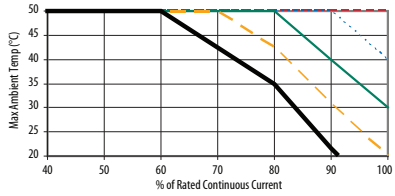

240 Volt Power Rating			Derating — — — 2 kHz ····· 4 kHz ———
ND Hp	**HD Hp**	**Cont. Amps**	
7.5	5.0	22	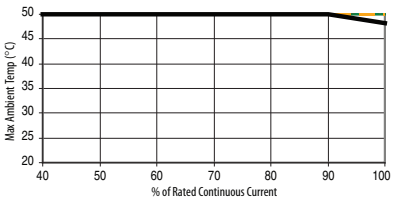
20	15	52	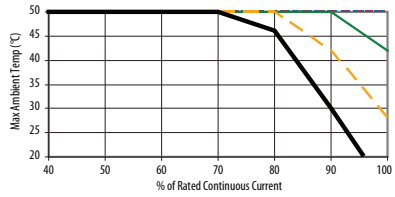
30	25	80	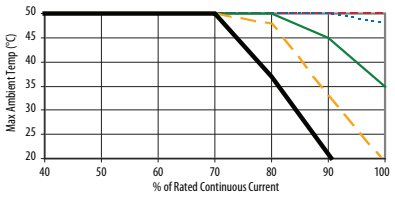
50	40	130 (104)	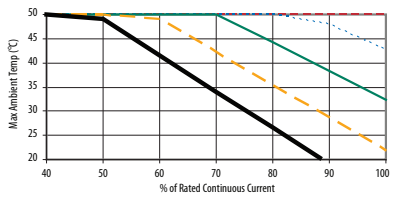
75	60	192 (154)	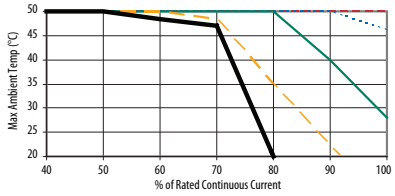

Ambient Temperature/Load – 400V AC

400 Volt Power Rating			Derating
ND kW	HD kW	Cont. Amps	2 kHz, 4 kHz, 6 kHz, 8 kHz, 10 kHz
0.37…7.5	0.25…5.5	1.3…15.4	None
15	11	30	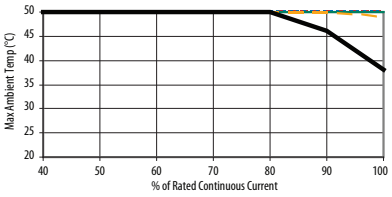
22	18.5	43	None
37	30	72	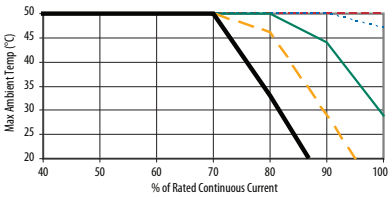
55	45	105 (85)	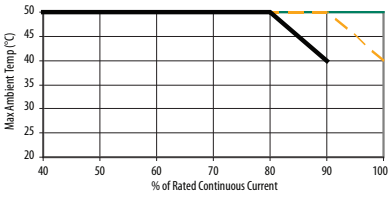
90	75	170 (140)	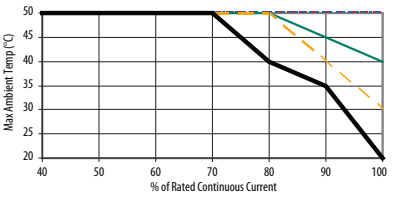
132	110	260 (205)	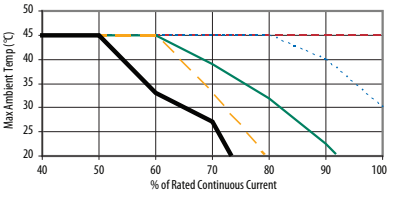

400 Volt Power Rating			Derating
ND kW	HD kW	Cont. Amps	2 kHz, 4 kHz, 6 kHz, 8 kHz, 10 kHz
11	7.5	22	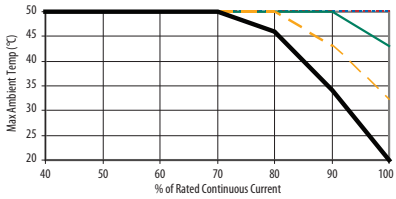
18.5	15	37	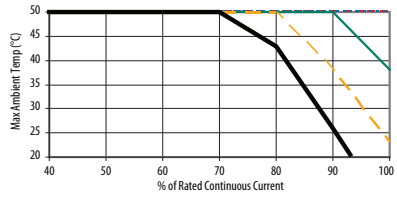
30	22	56	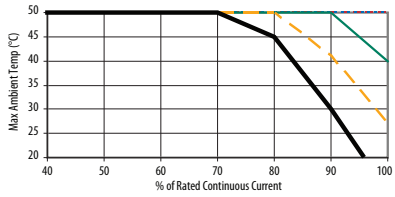
45	37	85 (72)	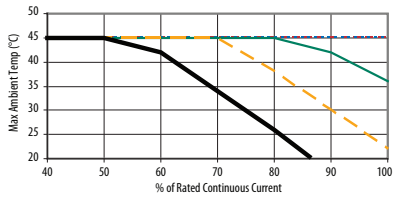
75	55	140 (105)	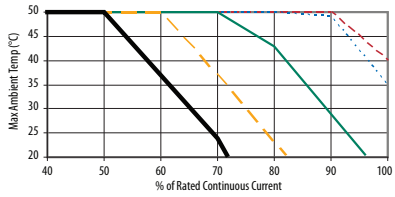
110	90	205 (170)	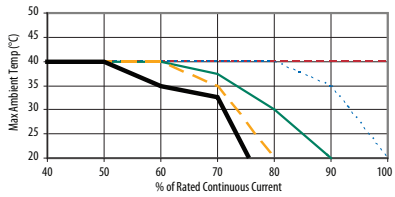
160	150	292 (263)	see 480 Volt, 292 (263) Amp on page 18
180	180	325 (325)	see 480 Volt, 325 (325) Amp on page 19
200	180	365 (325)	see 480 Volt, 365 (325) Amp on page 19
240	200	415 (365)	see 480 Volt, 415 (365) Amp on page 19
280	240	481 (415)	see 480 Volt, 481 (415) Amp on page 19
300	280	535 (481)	see 480 Volt, 535 (481) Amp on page 19
350	300	600 (535)	see 480 Volt, 600 (535) Amp on page 19
400	350	730 (600)	see 480 Volt, 730 (600) Amp on page 19
500	400	875 (700)	see 480 Volt, 875 (700) Amp on page 19

Ambient Temperature/Load – 480V AC

480 Volt Power Rating			Derating
ND Hp	HD Hp	Cont. Amps	2 kHz 4 kHz 6 kHz 8 kHz 10 kHz
0.5…10	0.33…7.5	1.1…14	None
20	15	27	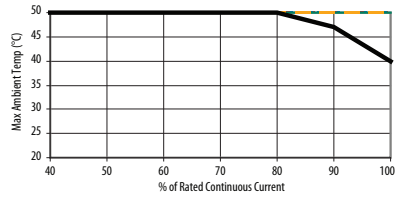
30	25	40	None
50	40	65	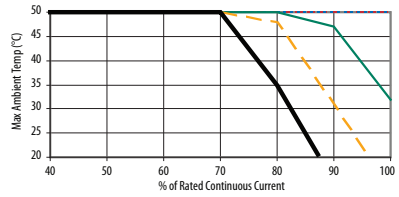
75	60	96 (77)	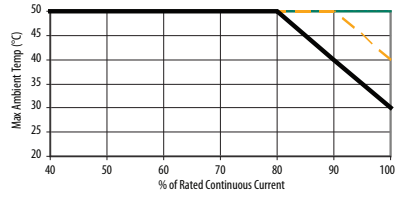
125	100	156 (125)	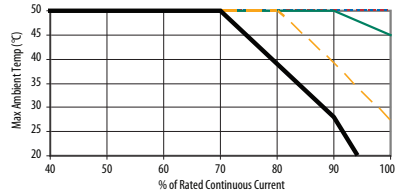
200	150	248 (180)	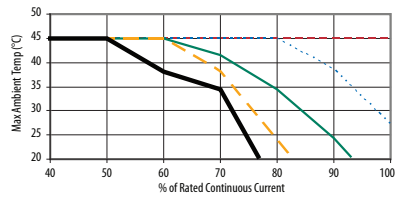

480 Volt Power Rating			Derating
ND Hp	HD Hp	Cont. Amps	2 kHz 4 kHz 6 kHz 8 kHz 10 kHz
15	10	22	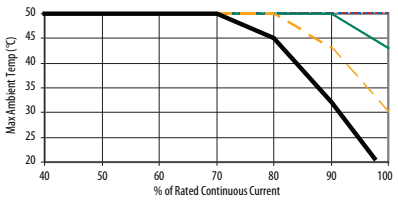
25	20	34	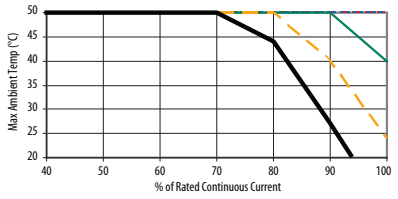
40	30	52	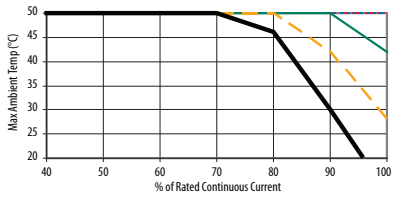
60	50	77 (65)	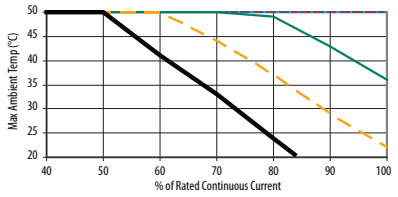
100	75	125 (96)	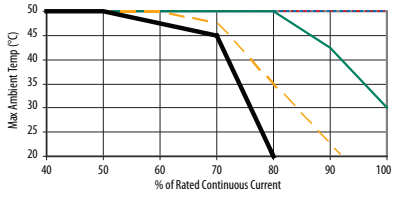
150	125	180 (156)	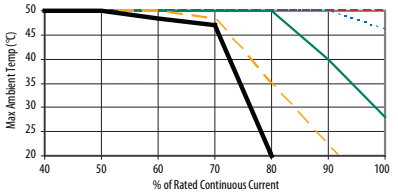
250	200	292 (263)	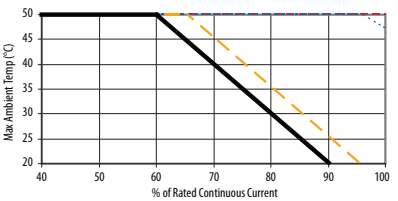

480 Volt Power Rating			Derating
ND Hp	HD Hp	Cont. Amps	2 kHz, 4 kHz, 6 kHz, 8 kHz, 10 kHz
250	250	325 (325)	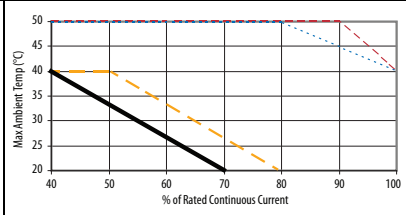
350	300	415 (365)	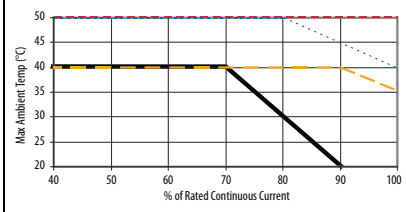
450	400	535 (481)	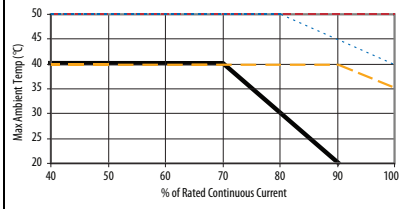
600	500	730 (600)	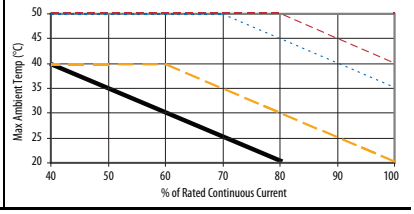

480 Volt Power Rating			Derating
ND Hp	HD Hp	Cont. Amps	2 kHz, 4 kHz, 6 kHz, 8 kHz, 10 kHz
300	250	365 (325)	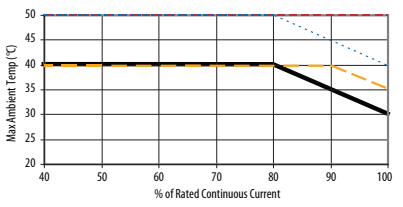
400	350	481 (415)	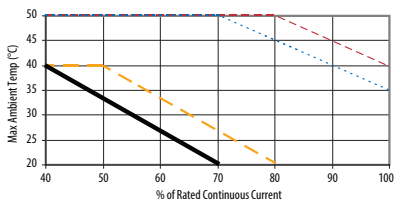
500	450	600 (535)	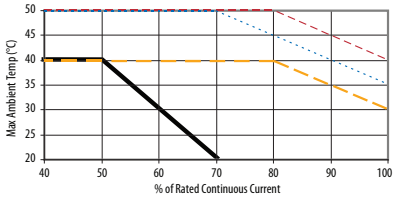
700	600	875 (700)	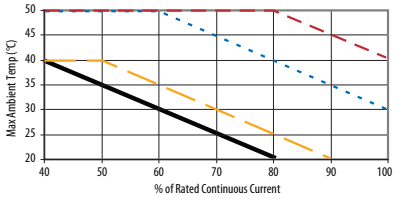

Ambient Temperature/Load – 600V AC

600 Volt Power Rating			Derating — — — 2 kHz ····· 4 kHz ———
ND Hp	**HD Hp**	**Cont. Amps**	
1.0…2.0	0.5…1.0	1.7…2.7	None
5.0	3.0	6.1	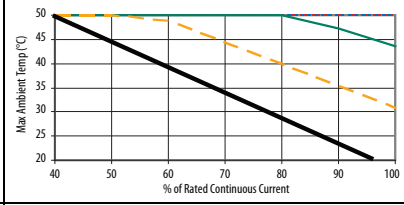
10	7.5	11	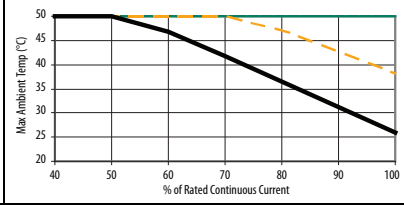
20	15	22	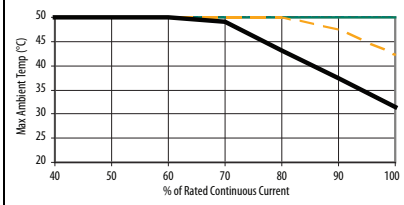
30	25	32	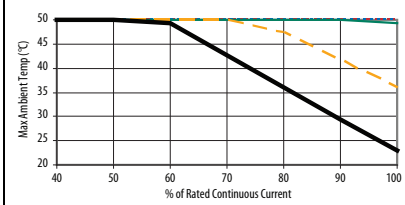
50	40	52	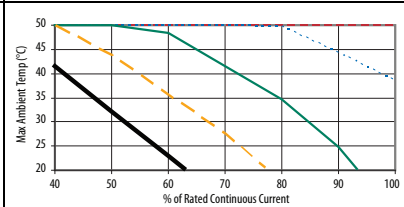
75	60	77 (63)	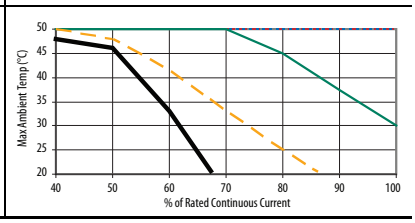

600 Volt Power Rating			Derating — — — 2 kHz ····· 4 kHz ———
ND Hp	**HD Hp**	**Cont. Amps**	
3.0	2.0	3.9	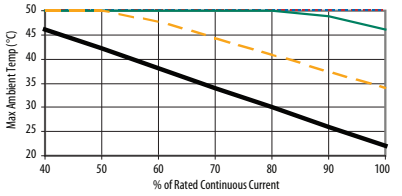
7.5	5.0	9	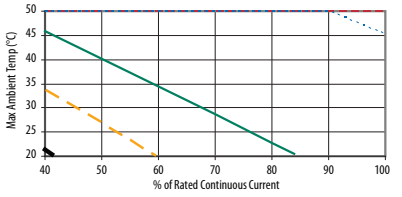
15	10	17	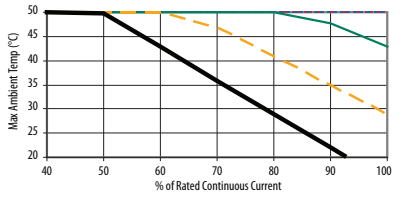
25	20	27	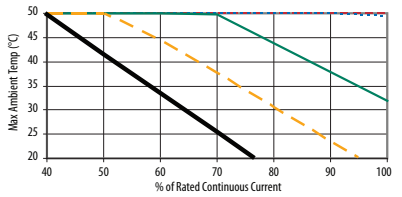
40	30	41	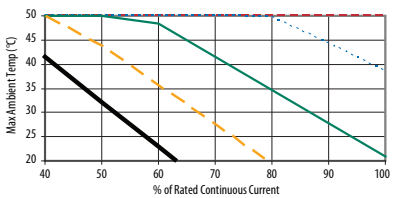
60	50	62	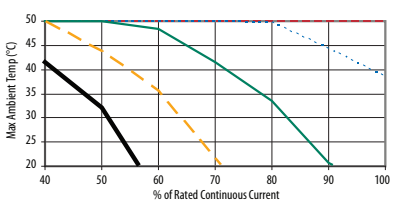
100	75	99 (77)	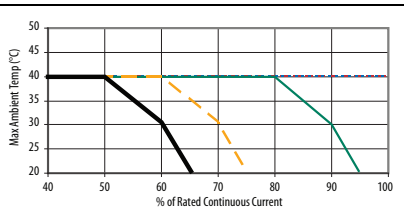

600 Volt Power Rating			Derating
ND Hp	HD Hp	Cont. Amps	2 kHz 4 kHz
125	100	125 (99)	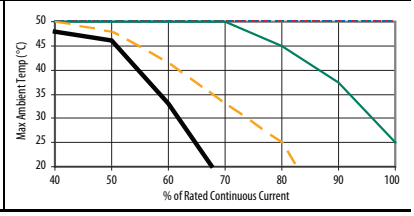

600 Volt Power Rating			Derating
ND Hp	HD Hp	Cont. Amps	2 kHz 4 kHz
150	125	144 (125)	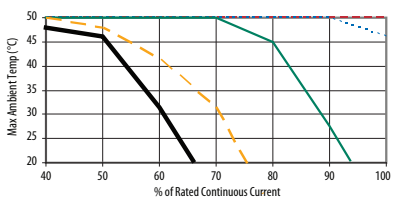

Ambient Temperature/Load – 690V AC

690 Volt Power Rating			Derating
ND kW	HD kW	Cont. Amps	2 kHz 4 kHz 6 kHz 8 kHz 10 kHz
45…55	37.5…45	52…60 (46…52)	None
90	75	98 (82)	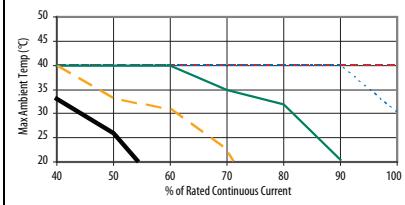
132	110	142 (119)	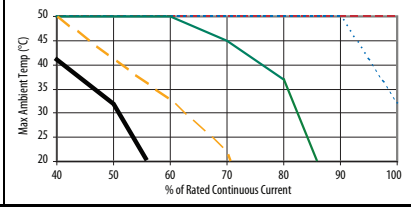

690 Volt Power Rating			Derating
ND kW	HD kW	Cont. Amps	2 kHz 4 kHz 6 kHz 8 kHz 10 kHz
75	55	82 (60)	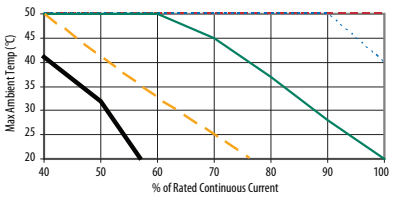
110	90	119 (98)	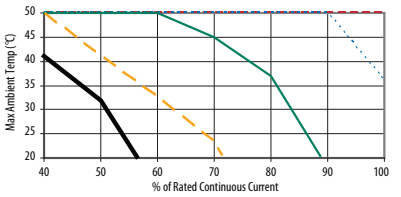

Single-Phase Input Power

The PowerFlex 700 drive is typically used with a three-phase input supply. Single-phase operation is possible with output current derated by 50% (at maximum ambient temperature of 25 °C) of the three-phase ratings.

208/240 Volt Single-Phase AC Input Ratings

240V Single-Phase AC Input						208V Single-Phase AC Input						
Drive Catalog Number	Frame	Hp Rating	Input Amps	Three-Phase Output		Drive Catalog Number	Frame	Hp Rating	Input Amps	Three-Phase Output		Temp.
				V AC	Amps					V AC	Amps	°C
20BB2P2	0	0.25	1.5	0-230	1.1	20BB2P2	0	0.25	1.7	0-200	1.3	25
20BB4P2	0	0.5	2.8	0-230	2.1	20BB4P2	0	0.5	3.2	0-200	2.4	25
20BB6P8	1	1	5.1	0-230	3.4	20BB6P8	1	1	5.9	0-200	3.9	25
20BB9P6	1	1.5	7.2	0-230	4.8	20BB9P6	1	1.5	8.3	0-200	5.5	25
20BB015	1	2.5	11.9	0-230	7.7	20BB015	1	2.5	13.6	0-200	8.8	25
20BB022	1	3.75	17.3	0-230	11	20BB022	1	3.75	19.9	0-200	12.7	25
20BB028	2	5	22.2	0-230	14	20BB028	2	5	25.7	0-200	16.1	25
20BB042	3	7.5	33.4	0-230	21	20BB042	3	7.5	38.5	0-200	24.2	25
20BB052	3	10	41.3	0-230	26	20BB052	3	10	44.6	0-200	28	25
20BB070	4	12.5	55.6	0-230	35	20BB070	4	12.5	62.3	0-200	39.1	25
20BB080	4	15	63.6	0-230	40	20BB080	4	15	73.3	0-200	46	25
20BB104	5	20	84.6	0-230	52	20BB104	5	20	97.9	0-200	60	25
20BB130	5	25	105.7	0-230	65	20BB130	5	25	106.1	0-200	65	25
20BB154	6	30	125.2	0-230	77	20BB154	6	30	144.4	0-200	88.5	25
20BB192	6	37.5	156.1	0-230	96	20BB192	6	37.5	180.3	0-200	110.5	25
20BB260	6	50	211.4	0-230	130	20BB260	6	50	212.1	0-200	130	25

380…480 Volt Single-Phase AC Input Ratings

480V Single-Phase AC Input						380…400V Single-Phase AC Input						
Drive Catalog Number	Frame	Hp Rating	Input Amps	Three-Phase Output		Drive Catalog Number	Frame	kW Rating	Input Amps	Three-Phase Output		Temp.
				V AC	Amps					V AC	Amps	°C
20BD1P1	0	0.25	0.7	0-460	0.6	20BC1P3	0	0.2	1	0-400	0.7	25
20BD2P1	0	0.5	1.4	0-460	1.1	20BC2P1	0	0.4	1.6	0-400	1.1	25
20BD3P4	0	1	2.3	0-460	1.7	20BC3P5	0	0.75	2.7	0-400	1.8	25
20BD5P0	0	1.5	3.4	0-460	2.5	20BC5P0	0	1.1	3.9	0-400	2.5	25
20BD8P0	0	2.5	6	0-460	4	20BC8P7	0	2	6.9	0-400	4.4	25
20BD011	0	3.75	8.2	0-460	5.5	20BC011	0	2.75	9.3	0-400	5.8	25
20BD014	1	5	10.9	0-460	7	20BC015	1	3.75	12.5	0-400	7.7	25
20BD022	1	7.5	17.3	0-460	11	20BC022	1	5.5	17.8	0-400	11	25
20BD027	2	10	21.4	0-460	13.5	20BC030	2	7.5	24.6	0-400	15	25
20BD034	2	12.5	27	0-460	17	20BC037	2	9.25	30.3	0-400	18.5	25
20BD040	3	15	31.8	0-460	20	20BC043	3	11	35.2	0-400	21.5	25
20BD052	3	20	41.3	0-460	26	20BC056	3	15	45.9	0-400	28	25
20BD065	3	25	51.6	0-460	32.5	20BC072	3	18.5	59.7	0-400	36	25
20BD077	4	30	62.6	0-460	38.5	20BC085	4	22.5	70.5	0-400	42.5	25
20BD096	5	37.5	78.1	0-460	48	20BC105	5	27.5	87	0-400	52.5	25
20BD125	5	50	101.6	0-460	62.5	20BC125	5	27.5	103.6	0-400	62.5	25
–	–	–	–	–	–	20BC140	5	37.5	117.4	0-400	70	25
20BD156	6	62.5	126.8	0-460	78	20BC170	6	45	142.6	0-400	85	25
20BD180	6	75	146.4	0-460	90	20BC205	6	55	171.9	0-400	102.5	25
20BD248	6	100	201.6	0-460	124	20BC260	6	66	220.6	0-400	130	25

600…690 Volt Single-Phase AC Input Rating

600V Single-Phase AC Input						690V Single-Phase AC Input						Temp.
Drive Catalog Number	Frame	Hp Rating	Input Amps	Three-Phase Output		Drive Catalog Number	Frame	kW Rating	Input Amps	Three-Phase Output		
				V AC	Amps					V AC	Amps	°C
20BE1P7	0	0.5	1.1	0-575	0.9	–	–	–	–	–	–	25
20BE2P7	0	1	1.8	0-575	1.4	–	–	–	–	–	–	25
20BE3P9	0	1.5	2.6	0-575	2	–	–	–	–	–	–	25
20BE6P1	0	2.5	4.6	0-575	3.1	–	–	–	–	–	–	25
20BE9P0	0	3.75	6.7	0-575	4.5	–	–	–	–	–	–	25
20BE011	1	5	8.5	0-575	5.5	–	–	–	–	–	–	25
20BE017	1	7.5	13.3	0-575	8.5	–	–	–	–	–	–	25
20BE022	2	10	17.5	0-575	11	–	–	–	–	–	–	25
20BE027	2	12.5	21.4	0-575	13.5	–	–	–	–	–	–	25
20BE032	3	15	25.4	0-575	16	–	–	–	–	–	–	25
20BE041	3	20	32.6	0-575	20.5	–	–	–	–	–	–	25
20BE052	3	25	41.3	0-575	26	20BF052	5	22.5	43.1	0-690	26	25
20BE062	4	30	50.4	0-575	31	20BF060	5	27.5	49.9	0-690	30	25
20BE077	5	37.5	62.6	0-575	38.5	20BF082	5	37.5	68.4	0-690	41	25
20BE099	5	50	80.5	0-575	49.5	20BF098	5	45	82	0-690	49	25
20BE125	6	62.5	101.6	0-575	62.5	20BF119	6	55	100	0-690	59.5	25
20BE144	6	75	117.1	0-575	72	20BF142	6	66	120.2	0-690	71	25

Drive, Fuse and Circuit Breaker Ratings

The PowerFlex 700 can be installed with input fuses or an input circuit breaker. National and local industrial safety regulations and/or electrical codes can determine additional requirements for these installations.

The tables on the following pages provide recommended AC line input fuse and circuit breaker information. See Fusing and Circuit Breakers below for UL and IEC requirements. Sizes listed are the recommended sizes based on 40 °C (104 °F) and the U.S. NEC. Other country, state, or local codes can require different ratings. Tables with DC link fuse recommendations for DC input drives are also provided.

Fusing

The recommended fuse types are listed below. If available current ratings do not match those listed in the tables provided, choose the next higher fuse rating.

- IEC – BS88 (British Standard) Parts 1 & 2, EN60269-1, Parts 1 & 2[(1)], type gG or equivalent must be used.
- UL – UL Class CC, T, RK1 or J must be used for Frames 0...6.
  UL Class T, RK1, J, or L must be used for Frames 7...10.

Circuit Breakers

The "non-fuse" listings in the following tables include inverse time circuit breakers, instantaneous trip circuit breakers (motor circuit protectors) and 140M self-protected combination motor controllers (Frames 0...6 only). If one of these is chosen as the desired protection method, the following requirements apply:

- IEC – Both types of circuit breakers and 140M self-protected combination motor controllers (Frames 0...6 only) are acceptable for IEC installations.
- UL – Only inverse time circuit breakers and the specified 140M self-protected combination motor controllers (Frames 0...6 only) are acceptable for UL installations.

(1) Typical designations include, but may not be limited to the following; Parts 1 & 2: AC, AD, BC, BD, CD, DD, ED, EFS, EF, FF, FG, GF, GG, GH.

208 Volt AC Input Protection Devices – Frames 0…6

Drive Catalog Number	Frame	Hp Rating		PWM Freq.	Temp. (11)	Input Ratings		Output Amps			Dual Element Time Delay Fuse		Non-Time Delay Fuse		Circuit Breaker (3)	Motor Circuit Protector (4)	140M Motor Protector with Adjustable Current Range (5)(6)			
		ND	HD	kHz	°C	Amps	kVA	Cont.	1 Min.	3 Sec.	Min. (1)	Max. (2)	Min. (1)	Max. (2)	Max. (8)	Max. (8)	Available Catalog Numbers - 140… (7)			Min. Enclosure Vol. (in.3) (14)
20BB2P2	0	0.5	0.33	4	50	1.9	0.7	2.5	2.8	3.8	3	6	3	10	15	3	M-C2E-B25	M-D8E-B25	–	7269
20BB4P2	0	1	0.75	4	50	3.7	1.3	4.8	5.6	7	6	10	6	17.5	15	7	M-C2E-B63	M-D8E-B63	–	7269
20BB6P8	1	2	1.5	4	50	6.8	2.4	7.8	10.4	13.8	10	15	10	30	30	15	M-C2E-C10	M-D8E-C10	M-F8E-C10	7269
20BB9P6	1	3	2	4	50	9.5	3.4	11	12.1	17	12	20	12	40	40	15	M-C2E-C16	M-D8E-C16	M-F8E-C16	7269
20BB015	1	5	3	4	50	15.7	5.7	17.5	19.3	26.3	20	35	20	70	70	30	M-C2E-C20	M-D8E-C20	M-F8E-C20	7269
20BB022	1	7.5	5	4	50	23	8.3	25.3	27.8	38	30	50	30	100	100	30	–	M-D8E-C25	M-F8E-C25	7269
20BB028	2	10	7.5	4	50	29.6	10.7	32.2	38	50.6	40	70	40	125	125	50	–	–	M-F8E-C32	7269
20BB042	3	15	10	4	50	44.5	16	48.3	53.1	72.5	60	100	60	175	175	70	–	–	M-F8E-C45	13630
20BB052	3	20	15	4	50	51.5	17.1	56	64	86	80	125	80	200	200	100	–	–	–	–
20BB070	4	25	20	4	50	72	25.9	78.2	93	124	90	175	90	300	300	100	–	–	–	–
20BB080	4	30	25	4	50	84.7	30.5	92	117	156	110	200	110	350	350	150	–	–	–	–
20BB104 (12)	5	40	–	4	50	113	40.7	120	132	175	150	250	150	475	350	150	–	–	–	–
		–	30	4	50	84.7	30.5	92	138	175	125	200	125	350	300	150	–	–	–	–
20BB130 (12)	5	50	–	4	50	141	44.1	130	143	175	175	275	175	500	375	250	–	–	–	–
		–	40	4	50	113	35.3	104	156	175	125	225	125	400	300	150	–	–	–	–
20BB154 (12)	6	60	–	4	50	167	60.1	177	195	266	225	350	225	500	500	250	–	–	–	–
		–	50	4	50	141	50.9	150	225	300	200	300	200	500	450	250	–	–	–	–
20BB192 (12)	6	75	–	4	50	208	75	221	243	308	300	450	300	600	600	400	–	–	–	–
		–	60	4	50	167	60.1	177	266	308	225	350	225	500	500	250	–	–	–	–
20BB260 (12)	6	100	–	2	45	255	91.9	260	286	390	300	575	300	750	750	400	–	–	–	–
		–	75	2	50	199	71.7	205	305	410	225	450	225	600	600	400	–	–	–	–

See page 29 for notes.

240 Volt AC Input Protection Devices – Frames 0…6

Drive Catalog Number	Frame	Hp Rating		PWM Freq.	Temp. (11)	Input Ratings		Output Amps			Dual Element Time Delay Fuse		Non-Time Delay Fuse		Circuit Breaker (3)	Motor Circuit Protector (4)	140M Motor Protector with Adjustable Current Range (5)(6)			
		ND	HD	kHz	°C	Amps	kVA	Cont.	1 Min.	3 Sec.	Min. (1)	Max. (2)	Min. (1)	Max. (2)	Max. (8)	Max. (8)	Available Catalog Numbers - 140… (7)			Min. Enclosure Vol. (in.3) (14)
20BB2P2	0	0.5	0.33	4	50	1.7	0.7	2.2	2.4	3.3	3	6	3	10	15	3	M-C2E-B25	M-D8E-B25	–	7269
20BB4P2	0	1	0.75	4	50	3.3	1.4	4.2	4.8	6.4	5	8	5	15	15	7	M-C2E-B63	M-D8E-B63	–	7269
20BB6P8	1	2	1.5	4	50	5.9	2.4	6.8	9	12	10	15	10	25	25	15	M-C2E-C10	M-D8E-C10	M-F8E-C10	7269
20BB9P6	1	3	2	4	50	8.3	3.4	9.6	10.6	14.4	12	20	12	35	35	15	M-C2E-C10	M-D8E-C10	M-F8E-C10	7269
20BB015	1	5	3	4	50	13.7	5.7	15.3	16.8	23	20	30	20	60	60	30	M-C2E-C16	M-D8E-C16	M-F8E-C16	7269
20BB022	1	7.5	5	4	50	19.9	8.3	22	24.2	33	25	50	25	80	80	30	–	M-D8E-C25	M-F8E-C25	7269
20BB028	2	10	7.5	4	50	25.7	10.7	28	33	44	35	60	35	100	100	50	–	–	M-F8E-C32	7269
20BB042	3	15	10	4	50	38.5	16	42	46.2	63	50	90	50	150	150	50	–	–	M-F8E-C45	13630
20BB052	3	20	15	4	50	47.7	19.8	52	63	80	60	100	60	200	200	100	–	–	–	–
20BB070	4	25	20	4	50	64.2	26.7	70	78	105	90	150	90	275	275	100	–	–	–	–
20BB080	4	30	25	4	50	73.2	30.5	80	105	140	100	180	100	300	300	100	–	–	–	–
20BB104 (12)	5	40	–	4	50	98	40.6	104	115	175	125	225	125	400	300	150	–	–	–	–
		–	30	4	50	73	30.5	80	120	160	100	175	100	300	300	100	–	–	–	–
20BB130 (12)	5	50	–	4	50	122	50.7	130	143	175	175	275	175	500	375	250	–	–	–	–
		–	40	4	50	98	40.6	104	156	175	125	225	125	400	300	150	–	–	–	–
20BB154 (12)	6	60	–	4	50	145	60.1	154	169	231	200	300	200	600	450	250	–	–	–	–
		–	50	4	50	122	50.7	130	195	260	175	275	175	500	375	250	–	–	–	–
20BB192 (12)	6	75	–	4	50	180	74.9	192	211	288	225	400	225	600	575	250	–	–	–	–
		–	60	4	50	145	60.1	154	231	308	200	300	200	600	450	250	–	–	–	–
20BB260 (12)	6	100	–	2	45	233	96.7	260	286	390	300	575	300	750	750	300	–	–	–	–
		–	75	2	50	169	70.1	205	305	410	225	450	225	600	600	250	–	–	–	–

See page 29 for notes.

400 Volt AC Input Protection Devices – Frames 0…6

Drive Catalog Number	Frame	kW Rating		PWM Freq.	Temp.	Input Ratings		Output Amps			Dual Element Time Delay Fuse		Non-Time Delay Fuse		Circuit Breaker (3)	Motor Circuit Protector (4)	140M Motor Protector with Adjustable Current Range(5)(6)			
		ND	HD	kHz	°C	Amps	kVA	Cont.	1 Min.	3 Sec.	Min. (1)	Max. (2)	Min. (1)	Max. (2)	Max. (8)	Max. (8)	Available Catalog Numbers - 140… (7)			Min. Enclosure Vol. (in.^{3}) (14)
20BC1P3	0	0.37	0.25	4	50 (11)	1.1	0.77	1.3	1.4	1.9	3	3	3	6	15	3	M-C2E-B16	–	–	7269
20BC2P1	0	0.75	0.55	4	50 (11)	1.8	1.3	2.1	2.4	3.2	3	6	3	8	15	3	M-C2E-B25	M-D8E-B25	–	7269
20BC3P5	0	1.5	0.75	4	50 (11)	3.2	2.2	3.5	4.5	6	6	7	6	12	15	7	M-C2E-B40	M-D8E-B40	–	7269
20BC5P0	0	2.2	1.5	4	50 (11)	4.6	3.2	5	5.5	7.5	6	10	6	20	20	7	M-C2E-B63	M-D8E-B63	–	7269
20BC8P7	0	4	2.2	4	50 (11)	7.9	5.5	8.7	9.9	13.2	15	17.5	15	30	30	15	M-C2E-C10	M-D8E-C10	M-F8E-C10	7269
20BC011	0	5.5	4	4	50 (11)	10.8	7.5	11.5	13	17.4	15	25	15	45	45	15	M-C2E-C16	M-D8E-C16	M-F8E-C16	7269
20BC015	1	7.5	5.5	4	50 (11)	14.4	10	15.4	17.2	23.1	20	30	20	60	60	20	M-C2E-C20	M-D8E-C20	M-F8E-C20	7269
20BC022	1	11	7.5	4	50 (11)	20.6	14.3	22	24.2	33	30	45	30	80	80	30	–	M-D8E-C25	M-F8E-C25	7269
20BC030	2	15	11	4	50 (11)	28.4	19.7	30	33	45	35	60	35	120	120	50	–	–	M-F8E-C32	7269
20BC037	2	18.5	15	4	50 (11)	35	24.3	37	45	60	45	80	45	125	125	50	–	–	M-F8E-C45	7269
20BC043	3	22	18.5	4	50 (11)	40.7	28.2	43	56	74	60	90	60	150	150	60	–	–	–	–
20BC056	3	30	22	4	50 (11)	53	36.7	56	64	86	70	125	70	200	200	100	–	–	–	–
20BC072	3	37	30	4	50 (10)(11)	68.9	47.8	72	84	112	90	150	90	250	250	100	–	–	–	–
20BC085 (12)	4	45	–	4	45 (11)	81.4	56.4	85	94	128	110	200	110	300	300	150	–	–	–	–
		–	37	4	45 (11)	68.9	47.8	72	108	144	90	175	90	275	300	100	–	–	–	–
20BC105 (12)	5	55	–	4	50 (9)	100.5	69.6	105	116	158	125	225	125	400	300	150	–	–	–	–
		–	45	4	50 (9)	81.4	56.4	85	128	170	110	175	110	300	300	150	–	–	–	–
20BC125 (12)	5	55	–	4	50 (9)	121.1	83.9	125	138	163	150	275	150	500	375	250	–	–	–	–
		–	45	4	50 (9)	91.9	63.7	96	144	168	125	200	125	375	375	150	–	–	–	–
20BC140 (12)	5	75	–	4	40 (9)	136	93.9	140	154	190	200	300	200	400	400	250	–	–	–	–
		–	55	4	40 (9)	101	69.6	105	157	190	150	225	150	300	300	150	–	–	–	–
20BC170 (12)	6	90	–	4	50 (9)	164	126	170	187	255	250	375	250	600	500	250	–	–	–	–
		–	75	4	50 (9)	136	103	140	210	280	200	300	200	550	400	250	–	–	–	–
20BC205 (12)	6	110	–	4	40 (9)	199	148	205	220	289	250	450	250	600	600	400	–	–	–	–
		–	90	4	40 (9)	164	126	170	255	313	250	375	250	600	500	250	–	–	–	–
20BC260 (12)	6	132	–	2	45 (9)	255	177	260	286	390	350	550	350	750	750	400	–	–	–	–
		–	110	2	50 (9)	199	138	205	308	410	250	450	250	600	600	400	–	–	–	–

See page 29 for notes.

400 Volt AC Input Protection Devices – Frames 7…10

Drive Catalog Number (12)	Frame	kW Rating		PWM Freq.	Temp. (16)	Input Ratings		Output Amps			Dual Element Time Delay Fuse		Non-Time Delay Fuse		Circuit Breaker (3)	Motor Circuit Protector (4)
		ND	HD	kHz	°C	Amps	kVA	Cont.	1 Min.	3 Sec.	Min. (1)	Max. (2)	Min. (1)	Max. (2)	Max. (8)	Max. (8)
20BC292	7	160		4	40	293	203	292	322	438	375	650	375	850	850	400
			150	4	40	264	183	263	395	526	350	550	350	550	750	400
20BC325	7	180		4	40	326	226	325	358	488	425	700	425	950	950	600
			180	4	40	326	226	325	488	650	425	700	425	950	950	600
20BC365	8	200		2	40	366	253	365	402	548	475	800	475	1000	1000	600
			180	2	40	326	226	325	488	650	425	700	425	950	950	600
20BC415	8	240		2	40	416	288	415	457	623	525	900	525	1200	1200	600
			200	2	40	366	253	365	548	730	475	800	475	1000	1000	600
20BC481	8	280		2	40	483	334	481	530	722	600	1000	600	1400	1400	700
			240	2	40	416	288	415	623	830	525	900	525	1200	1200	600
20BC535	8	300		2	40	537	372	535	589	803	700	1200	700	1600	1600	700
			280	2	40	483	334	481	722	962	600	1000	600	1400	1400	700
20BC600	8	350		2	40	602	417	600	660	900	750	1300	750	1800	1800	800
			300	2	40	537	371	535	803	1070	700	1200	700	1600	1600	700
20BC730	9	400		2	40	702	486	730	803	1095	900	1500	900	2100	2100	900
			350	2	40	602	417	600	900	1200	750	1300	750	1800	1800	800
20BC875	10	500		2	40	877	608	875	963	1313	1100	1900	1100	2600	2600	1200
			400	2	40	877	486	700	1050	1400	900	1500	900	2100	2100	900

See page 29 for notes.

480 Volt AC Input Protection Devices – Frames 0…6

Drive Catalog Number	Frame	Hp Rating		PWM Freq.	Temp.	Input Ratings		Output Amps			Dual Element Time Delay Fuse		Non-Time Delay Fuse		Circuit Breaker (3)	Motor Circuit Protector (4)	140M Motor Protector with Adjustable Current Range (5)(6)			
		ND	HD	kHz	°C	Amps	kVA	Cont.	1 Min.	3 Sec.	Min. (1)	Max. (2)	Min. (1)	Max. (2)	Max. (8)	Max. (8)	Available Catalog Numbers - 140… (7)			Min. Enclosure Vol. (in.3) (14)
20BD1P1	0	0.5	0.33	4	50 (11)	0.9	0.7	1.1	1.2	1.6	3	3	3	6	15	3	M-C2E-B16	–	–	7269
20BD2P1	0	1	0.75	4	50 (11)	1.6	1.4	2.1	2.4	3.2	3	6	3	8	15	3	M-C2E-B25	–	–	7269
20BD3P4	0	2	1.5	4	50 (11)	2.6	2.2	3.4	4.5	6	4	8	4	12	15	7	M-C2E-B40	M-D8E-B40	–	7269
20BD5P0	0	3	2	4	50 (11)	3.9	3.2	5	5.5	7.5	6	10	6	20	20	7	M-C2E-B63	M-D8E-B63	–	7269
20BD8P0	0	5	3	4	50 (11)	6.9	5.7	8	8.8	12	10	15	10	30	30	15	M-C2E-C10	M-D8E-C10	M-F8E-C10	7269
20BD011	0	7.5	5	4	50 (11)	9.5	7.9	11	12.1	16.5	15	20	15	40	40	15	M-C2E-C16	M-D8E-C16	M-F8E-C16	7269
20BD014	1	10	7.5	4	50 (11)	12.5	10.4	14	16.5	22	17.5	30	17.5	50	50	20	M-C2E-C16	M-D8E-C16	M-F8E-C16	7269
20BD022	1	15	10	4	50 (11)	19.9	16.6	22	24.2	33	25	50	25	80	80	30	–	M-D8E-C25	M-F8E-C25	7269
20BD027	2	20	15	4	50 (11)	24.8	20.6	27	33	44	35	60	35	100	100	50	–	–	M-F8E-C32	7269
20BD034	2	25	20	4	50 (11)	31.2	25.9	34	40.5	54	40	70	40	125	125	50	–	–	M-F8E-C45	7269
20BD040	3	30	25	4	50 (11)	36.7	30.5	40	51	68	50	90	50	150	150	50	–	–	M-F8E-C45	13630
20BD052	3	40	30	4	50 (11)	47.7	39.7	52	60	80	60	110	60	200	200	70	–	–	–	–
20BD065	3	50	40	4	50 (11)	59.6	49.6	65	78	104	80	125	80	250	250	100	–	–	–	–
20BD077 (12)	4	60	–	4	50 (11)	72.3	60.1	77	85	116	100	170	100	300	300	100	–	–	–	–
		–	50	4	50 (11)	59.6	49.6	65	98	130	80	125	80	250	250	100	–	–	–	–
20BD096 (12)	5	75	–	4	50 (9)	90.1	74.9	96	106	144	125	200	125	350	350	125	–	–	–	–
		–	60	4	50 (9)	72.3	60.1	77	116	154	100	170	100	300	300	100	–	–	–	–
20BD125 (12)	5	100	–	4	50 (9)	117	97.6	125	138	163	150	250	150	500	375	150	–	–	–	–
		–	75	4	50 (9)	90.1	74.9	96	144	168	125	200	125	350	350	125	–	–	–	–
20BD156 (12)	6	125	–	4	50 (9)	147	122	156	172	234	200	350	200	600	450	250	–	–	–	–
		–	100	4	50 (9)	131	109	125	188	250	175	250	175	500	375	250	–	–	–	–
20BD180 (12)	6	150	–	4	50 (9)	169	141	180	198	270	225	400	225	600	500	250	–	–	–	–
		–	125	4	50 (9)	147	122	156	234	312	200	350	200	600	450	250	–	–	–	–
20BD248 (12)	6	200	–	2	45 (9)	233	194	248	273	372	300	550	300	700	700	400	–	–	–	–
		–	150	2	50 (9)	169 (17)	141	180	270	360	225	400	225	600	500	250	–	–	–	–

See page 29 for notes.

480 Volt AC Input Protection Devices – Frames 7…10

Drive Catalog Number (12)	Frame	Hp Rating		PWM Freq.	Temp. (16)	Input Ratings		Output Amps			Dual Element Time Delay Fuse		Non-Time Delay Fuse		Circuit Breaker (3)	Motor Circuit Protector (4)
		ND	HD	kHz	°C	Amps	kVA	Cont.	1 Min.	3 Sec.	Min. (1)	Max. (2)	Min. (1)	Max. (2)	Max. (8)	Max. (8)
20BD292	7	250		4	40	281	233	292	322	438	375	650	375	850	850	400
			200	4	40	253	210	263	395	526	350	550	350	550	750	400
20BD325	7	250		4	40	313	260	325	358	488	425	700	425	950	950	600
			250	4	40	313	260	325	488	650	425	700	425	950	950	600
20BD365	8	300		2	40	351	292	365	402	548	475	800	475	1000	1000	600
			250	2	40	313	260	325	488	650	425	700	425	950	950	600
20BD415	8	350		2	40	399	331	415	457	623	525	900	525	1200	1200	600
			300	2	40	351	291	365	548	730	475	800	475	1000	1000	600
20BD481	8	400		2	40	462	384	481	530	722	600	1000	600	1400	1400	700
			350	2	40	399	331	415	623	830	525	900	525	1200	1200	600
20BD535	8	450		2	40	514	427	535	589	803	700	1200	700	1600	1600	700
			400	2	40	462	384	481	722	962	600	1000	600	1400	1400	700
20BD600	8	500		2	40	577	479	600	660	900	750	1300	750	1800	1800	800
			450	2	40	514	427	535	803	1070	700	1200	700	1600	1600	700
20BD730	9	600		2	40	673	559	730	803	1095	900	1500	900	2100	2100	900
			500	2	40	577	479	600	900	1200	750	1300	750	1800	1800	800
20BD875	10	700		2	40	841	699	875	963	1313	1100	1900	1100	2600	2600	1200
			600	2	40	673	559	700	1050	1400	900	1500	900	2100	2100	900

See page 29 for notes.

600 Volt AC Input Protection Devices – Frames 0…6 [13]

Drive Catalog Number	Frame	Hp Rating		PWM Freq.	Temp. [11]	Input Ratings		Output Amps			Dual Element Time Delay Fuse		Non-Time Delay Fuse		Circuit Breaker [3]	Motor Circuit Protector [4]	140M Motor Protector with Adjustable Current Range [5][6]			
		ND	HD	kHz	°C	Amps	kVA	Cont.	1 Min.	3 Sec.	Min. [1]	Max. [2]	Min. [1]	Max. [2]	Max. [8]	Max. [8]	Available Catalog Numbers - 140… [7]			Min. Enclosure Vol. (in.^{3}) [14]
20BE1P7	0	1	0.5	4	50	1.3	1.4	1.7	2	2.6	2	4	2	6	15	3	M-C2E-B16	–	–	7269
20BE2P7	0	2	1	4	50	2.1	2.1	2.7	3.6	4.8	3	6	3	10	15	3	M-C2E-B25	–	–	7269
20BE3P9	0	3	2	4	50	3	3.1	3.9	4.3	5.9	6	9	6	15	15	7	M-C2E-B40	M-D8E-B40	–	7269
20BE6P1	0	5	3	4	50	5.3	5.5	6.1	6.7	9.2	9	12	9	20	20	15	–	M-D8E-B63	–	7269
20BE9P0	0	7.5	5	4	50	7.8	8.1	9	9.9	13.5	10	20	10	35	30	15	–	M-D8E-C10	M-F8E-C10	7269
20BE011	1	10	7.5	4	50	9.9	10.2	11	13.5	18	15	25	15	40	40	15	–	M-D8E-C10	M-F8E-C10	7269
20BE017	1	15	10	4	50	15.4	16	17	18.7	25.5	20	40	20	60	50	20	–	M-D8E-C16	M-F8E-C16	7269
20BE022	2	20	15	4	50	20.2	21	22	25.5	34	30	50	30	80	80	30	–	–	M-F8E-C25	7269
20BE027	2	25	20	4	50	24.8	25.7	27	33	44	35	60	35	100	100	50	–	–	M-F8E-C25	7269
20BE032	3	30	25	4	50	29.4	30.5	32	40.5	54	40	70	40	125	125	50	–	–	M-F8E-C32	13630
20BE041	3	40	30	4	50	37.6	39.1	41	48	64	50	90	50	150	150	100	–	–	–	–
20BE052	3	50	40	4	50	47.7	49.6	52	61.5	82	60	110	60	200	200	100	–	–	–	–
20BE062	4	60	50	2	50	58.2	60.5	62	78	104	80	125	80	225	225	100	–	–	–	–
20BE077 [12]	5	75	–	2	50 [9]	72.3	75.1	77	85	116	90	150	90	300	300	100	–	–	–	–
		–	60	2	50 [9]	58.2	60.5	63	94	126	90	125	90	250	250	100	–	–	–	–
20BE099 [12]	5	100	–	2	40 [9]	92.9	96.6	99	109	126	125	200	125	375	375	150	–	–	–	–
		–	75	2	40 [9]	72.3	75.1	77	116	138	100	175	100	300	300	100	–	–	–	–
20BE125 [12]	6	125	–	2	50 [9]	117	122	125	138	188	150	250	150	375	375	250	–	–	–	–
		–	100	2	50 [9]	93	96.6	99	149	198	125	200	125	375	375	150	–	–	–	–
20BE144 [12]	6	150	–	2	50 [9]	135	141	144	158	216	175	300	175	400	400	250	–	–	–	–
		–	125	2	50 [9]	117	122	125	188	250	150	275	150	375	375	250	–	–	–	–

See page 29 for notes.

690 Volt AC Input Protection Devices – Frames 0…6 [13]

Drive Catalog Number [12]	Frame	kW Rating		PWM Freq.	Temp. [11]	Input Ratings		Output Amps			Dual Element Time Delay Fuse		Non-Time Delay Fuse		Circuit Breaker [3]	Motor Circuit Protector [4]
		ND	HD	kHz	°C	Amps	kVA	Cont.	1 Min.	3 Sec.	Min. [1]	Max. [2]	Min. [1]	Max. [2]	Max. [8]	Max. [8]
20BF052	5	45	–	4	50 [9]	46.9	56.1	52	57	78	60	110	60	175	175	–
		–	37.5	4	50 [9]	40.1	48	46	69	92	50	90	50	150	150	–
20BF060	5	55	–	4	50 [9]	57.7	68.9	60	66	90	80	125	80	225	225	–
		–	45	4	50 [9]	46.9	56.1	52	78	104	60	110	60	175	175	–
20BF082	5	75	–	2	50 [9]	79	94.4	82	90	123	100	200	100	375	375	–
		–	55	2	50 [9]	57.7	68.9	60	90	120	80	125	80	225	225	–
20BF098	5	90	–	2	40 [9]	94.7	113	98	108	127	125	200	125	375	375	–
		–	75	2	40 [9]	79	94.4	82	123	140	100	200	100	375	375	–
20BF119	6	110	–	2	50 [9]	115	137	119	131	179	150	250	150	400	–	–
		–	90	2	50 [9]	94.7	113	98	147	196	125	200	125	375	–	–
20BF142	6	132	–	2	50 [9]	138	165	142	156	213	175	300	175	450	–	–
		–	110	2	50 [9]	115	137	119	179	238	150	250	150	400	–	–

See page 29 for notes.

Notes

(1) Minimum protection device size is the lowest rated device that supplies maximum protection without nuisance tripping.

(2) Maximum protection device size is the highest rated device that supplies drive protection. For US NEC, minimum size is 125% of motor FLA. Ratings shown are maximum.

(3) Circuit Breaker - inverse time breaker. For US NEC, minimum size is 125% of motor FLA. Ratings shown are maximum.

(4) Motor Circuit Protector - instantaneous trip circuit breaker. For US NEC minimum size is 125% of motor FLA. Ratings shown are maximum.

(5) Bulletin 140M with adjustable current range must have the current trip set to the minimum range that the device will not trip.

(6) Manual Self-Protected (Type E) Combination Motor Controller, UL listed for 208 Wye or Delta, 240 Wye or Delta, 480Y/277 or 600Y/ 347. Not UL listed for use on 480V or 600V Delta/Delta, corner ground, or high-resistance ground systems.

(7) The AIC ratings of the Bulletin 140M Motor Protector Circuit Breakers can vary. See Bulletin 140M Motor Protection Circuit Breakers Application Ratings.

(8) Maximum allowable rating by US NEC. Exact size must be chosen for each installation.

(9) UL Type 12/IP54 (flange mount) heat sink ambient temperature rating is 40° C/ambient of unprotected drive portion (inside enclosure) is 55° C. The ambient temperature for the UL Type 12/IP54 stand-alone drives is 40° C.

(10) Must remove top label and vent plate, drive enclosure rating is IP00, NEMA / UL Type Open.

(11) Frames 0…4 temperature rating is for NEMA / UL Type Open. The adhesive top label must be removed to operate drive at this temperature. Frames 5 & 6 do not have a top label.

(12) Drives have dual current ratings; one for normal duty applications, and one for heavy duty applications. The drive can be operated at either rating.

(13) Note: 600V class drives below 77 Amps (Frames 0…4) are declared to meet the Low Voltage Directive. It is the responsibility of the user to determine compliance to the EMC directive.

(14) When using a Manual Self-Protected (Type E) Combination Motor Controller, the drive must be installed in a ventilated or non-ventilated enclosure with the minimum volume specified in this column. Application specific thermal considerations can require a larger enclosure.

(15) Frame 7…10 drives are CE Certified for use with 400V AC and 480V AC center grounded neutral power supply systems only. It is the responsibility of the user to determine compliance to the EMC directive.

(16) Temperature rating is for IP20, NEMA / UL Type 1. For IP00, NEMA Type Open the temperature rating is 65 °C for the control board and 40 °C for the heat sink entry air.

(17) Input current on the drive can be lower than the output current due to the power factor correction in the drive.

325 Volt DC Input Protection Devices – Frames 0…6

Drive Catalog Number	Frame	Hp Rating		PWM Freq.	Temp. (1)	DC Input Ratings	Output Amps			Fuse	Non-Time Delay Fuse (2)(11)
		ND	HD	kHz	°C	Amps	Cont.	1 Min.	3 Sec.		
20BB2P2	0	0.5	0.33	4	50	2	2.2	2.4	3.3	5	JKS-5
20BB4P2	0	1	0.75	4	50	3.8	4.2	4.8	6.4	10	JKS-10
20BB6P8	1	2	1.5	4	50	6.9	6.8	9	12	15	HSJ15
20BB9P6	1	3	2	4	50	9.7	9.6	10.6	14.4	20	HSJ20
20BB015	1	5	3	4	50	16	15.3	16.8	23	30	HSJ30
20BB022	1	7.5	5	4	50	23.3	22	24.2	33	45	HSJ45
20BB028	2	10	7.5	4	50	30	28	33	44	60	HSJ60
20BB042	3	15	10	4	50	45	42	46.2	63	90	HSJ90
20BB052	3	20	15	4	50	55	52	63	80	100	HSJ100
20BB070	4	25	20	4	50	75.3	70	78	105	150	HSJ150
20BB080	4	30	25	4	50	86.8	80	105	140	175	HSJ175
20BN104 (3)	5	40	–	4	50	114.1	104	115	175	200	HSJ200
		–	30	4	50	85.8	80	120	160	200	HSJ200
20BN130 (3)	5	50	–	4	50	142.6	130	143	175	200	HSJ200
		–	40	4	50	114.1	104	156	175	200	HSJ200
20BN154 (3)	6	60	–	4	50	169	154	169	231	300	HSJ300
		–	50	4	50	142.6	130	195	260	300	HSJ300
20BN192 (3)	6	75	–	4	50	210.6	192	211	288	350	HSJ350
		–	60	4	50	169	154	231	308	350	HSJ350
20BN260 (3)	6	100	–	2	45	285.3	260	286	390	400	HSJ400
		–	75	2	50	210.6	205	305	410	400	HSJ400

See page 32 for notes.

540 Volt DC Input Protection Devices – Frames 0…6

Drive Catalog Number	Frame	kW Rating		PWM Freq.	Temp.[1]	DC Input Ratings	Output Amps			Fuse	Non-Time Delay Fuse[2][11]
		ND	HD	kHz	°C	Amps	Cont.	1 Min.	3 Sec.		
20BC1P3	0	0.37	0.25	4	50	1.3	1.3	1.4	1.9	3	JKS-3
20BC2P1	0	0.75	0.55	4	50	2.1	2.1	2.4	3.2	6	JKS-6
20BC3P5	0	1.5	0.75	4	50	3.7	3.5	4.5	6	8	JKS-8
20BC5P0	0	2.2	1.5	4	50	5.3	5	5.5	7.5	10	JKS-10
20BC8P7	0	4	3	4	50	9.3	8.7	9.9	13.2	15	HSJ15
20BC011	0	5.5	4	4	50	12.6	11.5	13	17.4	20	HSJ20
20BC015	1	7.5	5.5	4	50	16.8	15.4	17.2	23.1	25	HSJ25
20BC022	1	11	7.5	4	50	24	22	24.2	33	40	HSJ40
20BC030	2	15	11	4	50	33.2	30	33	45	50	HSJ50
20BC037	2	18.5	15	4	50	40.9	37	45	60	70	HSJ70
20BC043	3	22	18.5	4	50	47.5	43	56	74	90	HSJ90
20BC056	3	30	22	4	50	61.9	56	64	86	100	HSJ100
20BC072	3	37	30	4	50[7]	80.5	72	84	112	125	HSJ125
20BC085[3][5]	4	45	–	4	45	95.1	85	94	128	150	HSJ150
		–	37	4	45	80.5	72	108	144	175	HSJ175
20BH105[3][5]	5	55	–	4	50[4]	120.2	105	116	158	175	HSJ175
		–	45	4	50[4]	95.1	85	128	170	200	HSJ200
20BH140[3][5]	5	75	–	4	40[4]	159	140	154	190	225	HSJ225
		–	55	4	40[4]	120.2	105	158	190	225	HSJ225
20BH170[3][5]	6	90	–	4	50[4]	192.3	170	187	255	300	HSJ300
		–	75	4	50[4]	159	140	210	280	300	HSJ300
20BH205[3][5]	6	110	–	4	40[4]	226	205	220	289	350	HSJ350
		–	90	4	40[4]	192.3	170	255	313	350	HSJ350
20BH260[3][5]	6	132	–	2	45[4]	298	260	286	390	500	HSJ500
		–	110	2	50[4]	226	205	305	410	500	HSJ500

See page 32 for notes.

540 Volt DC Input with Precharge – Frames 7…10

Drive Catalog Number	Frame	kW Rating		PWM Freq.	Temp.	DC Input Ratings		Output Amps			Fuse	Non-Time Delay Fuse[2][11]
		ND	HD	kHz	°C	Amps	kW	Cont.	1 Min.	3 Sec.		
20BP292	7	160		4	40	342	185	292	322	438	500	170M6608[10]
			150	4	40	309	166	263	395	526	630	170M6610[10]
20BP325	7	180		4	40	381	206	325	358	488	630	170M6610[10]
			180	4	40	381	206	325	488	650	800	170M6612[10]
20BP365	8	200		2	40	428	231	365	402	548	630	170M6610[10]
			180	2	40	381	206	325	488	650	800	170M6612[10]
20BP415	8	240		2	40	487	262	415	457	623	800	170M6612[10]
			200	2	40	428	231	365	548	730	900	170M6613[10]
20BP481	8	280		2	40	564	304	481	530	722	900	170M6613[10]
			240	2	40	487	262	415	623	830	1000	170M6614[10]
20BP535	8	300		2	40	627	338	535	589	803	1000	170M6614[10]
			280	2	40	564	304	481	722	962	1100	170M6615[10]
20BP600	8	350		2	40	703	379	600	660	900	1100[8]	170M6615[10]
			300	2	40	627	338	535	803	1070	1200[8]	170M6616[10]
20BP730	9	400		2	40	855	461	730	803	1095	1200[9]	170M6616[10]
			350	2	40	703	379	600	900	1200	1400[9]	170M6617[10]
20BH875 No Precharge	10	500		2	40	1025	553	875	963	1313	2 x 800	170M6612[10]
			400	2	40	820	443	700	1050	1400	2 x 800	170M6612[10]

See page 32 for notes.

650 Volt DC Input Protection Devices – Frames 0…6

Drive Catalog Number	Frame	Hp Rating		PWM Freq.	Temp.[1]	DC Input Ratings	Output Amps			Fuse	Non-Time Delay Fuse[2][11]
		ND	HD	kHz	°C	Amps	Cont.	1 Min.	3 Sec.		
20BD1P1	0	0.5	0.33	4	50	1.0	1.1	1.2	1.6	3	JKS-3
20BD2P1	0	1	0.75	4	50	1.9	2.1	2.4	3.2	6	JKS-6
20BD3P4	0	2	1.5	4	50	3.0	3.4	4.5	6.0	6	JKS-6
20BD5P0	0	3	2	4	50	4.5	5.0	5.5	7.5	10	JKS-10
20BD8P0	0	5	3	4	50	8.1	8.0	8.8	12	15	HSJ15
20BD011	0	7.5	5	4	50	11.1	11	12.1	16.5	20	HSJ20
20BD014	1	10	7.5	4	50	14.7	14	16.5	22	30	HSJ30
20BD022	1	15	10	4	50	23.3	22	24.2	33	40	HSJ40
20BD027	2	20	15	4	50	28.9	27	33	44	50	HSJ50
20BD034	2	25	20	4	50	36.4	34	40.5	54	60	HSJ60
20BD040	3	30	25	4	50	42.9	40	51	68	80	HSJ80
20BD052	3	40	30	4	50	55.7	52	60	80	90	HSJ90
20BD065	3	50	40	4	50	69.7	65	78	104	100	HSJ100
20BD077[3]	4	60	–	4	50	84.5	77	85	116	150	HSJ150
		–	50	4	50	69.7	65	98	130	150	HSJ150
20BR096[3][6]	5	75	–	4	50[4]	105.3	96	106	144	175	HSJ175
		–	60	4	50[4]	84.5	77	116	154	175	HSJ175
20BR125[3][6]	5	100	–	4	50[4]	137.1	125	138	163	200	HSJ200
		–	75	4	50[4]	105.3	96	144	168	200	HSJ200
20BR156[3][6]	6	125	–	4	50[4]	171.2	156	172	234	300	HSJ300
		–	100	4	50[4]	137.1	125	188	250	300	HSJ300
20BR180[3][6]	6	150	–	4	50[4]	204	180	198	270	400	HSJ400
		–	125	4	50[4]	171.2	156	234	312	400	HSJ400
20BR248[3][6]	6	200	–	2	45[4]	272	248	273	372	400	HSJ400
		–	150	2	50[4]	204	180	270	360	400	HSJ400

See page 32 for notes.

650 Volt DC Input with Precharge – Frames 7…10

Drive Catalog Number	Frame	Hp Rating		PWM Freq.	Temp.	DC Input Ratings		Output Amps			Fuse	Non-Time Delay Fuse[2][11]
		ND	HD	kHz	°C	Amps	kW	Cont.	1 Min.	3 Sec.		
20BR292	7	250		4	40	328	212	292	322	438	500	170M6608[10]
			200	4	40	296	191	263	395	526	630	170M6610[10]
20BR325	7	250		4	40	365	236	325	358	488	550	170M6609[10]
			250	4	40	365	236	325	488	650	800	170M6612[10]
20BR365	8	300		2	40	410	265	365	402	548	630	170M6610[10]
			250	2	40	365	236	325	488	650	800	170M6612[10]
20BR415	8	350		2	40	466	302	415	457	623	700	170M6611[10]
			300	2	40	410	265	365	548	730	800	170M6612[10]
20BR481	8	400		2	40	540	350	481	530	722	800	170M6619[10]
			350	2	40	466	302	415	623	830	900	170M6613[10]
20BR535	8	450		2	40	601	389	535	589	803	900	170M6613[10]
			400	2	40	540	350	481	722	962	1000	170M6614[10]
20BR600	8	500		2	40	674	436	600	660	900	1000[8]	170M6614[10]
			450	2	40	601	389	535	803	1070	1200[8]	170M6616[10]
20BR730	9	600		2	40	820	533	730	803	1095	1200[9]	170M6616[10]
			500	2	40	674	436	600	900	1200	1400[9]	170M6617[10]
20BJ875 No Precharge	10	700		2	40	983	636	875	963	1313	1400	2 x 170M6611[10]
			600	2	40	786	509	700	1050	1400	1600	2 x 170M6612[10]

See page 32 for notes.

810 Volt DC Input Protection Devices – Frames 0…6

Drive Catalog Number	Frame	Hp Rating		PWM Freq.	Temp.[1]	DC Input Ratings	Output Amps			Fuse	Non-Time Delay Fuse[2][11]
		ND	HD	kHz	°C	Amps	Cont.	1 Min.	3 Sec.		
20BE1P7	0	1	0.75	4	50	1.5	1.7	2	2.6	3	JKS-3
20BE2P7	0	2	1.5	4	50	2.4	2.7	3.6	4.8	6	JKS-6
20BE3P9	0	3	2	4	50	3.5	3.9	4.3	5.9	6	JKS-6
20BE6P1	0	5	3	4	50	6.2	6.1	6.7	9.2	10	JKS-10
20BE9P0	0	7.5	5	4	50	9.1	9	9.9	13.5	15	HSJ15
20BE011	0	10	7.5	4	50	11.5	11	13.5	18	20	HSJ20
20BE017	1	15	10	4	50	18	17	18.7	25.5	30	HSJ30
20BE022	2	20	15	4	50	23.6	22	25.5	34	40	HSJ40
20BE027	2	25	20	4	50	29	27	33	44	50	HSJ50
20BE032	3	30	25	4	50	34.3	32	40.5	54	60	HSJ60
20BE041	3	40	30	4	50	43.9	41	48	64	70	HSJ70
20BE052	3	50	40	4	50	55.7	52	61.5	82	90	HSJ90
20BE062	4	60	50	2	50	68	62	78	104	125	HSJ125
20BT099[3]	5	100	–	2	40	108.6	99	109	126	150	HSJ150
		–	75	2	40	84.5	77	116	138	150	HSJ150
20BT144[3]	6	150	–	2	50	158	144	158	216	250	HSJ250
		–	125	2	50	137.1	125	188	250	250	HSJ250

932 Volt DC Input Protection Devices – Frames 0…6

Drive Catalog Number	Frame	kW Rating		PWM Freq.	Temp.[1]	DC Input Ratings	Output Amps			Fuse	Non-Time Delay Fuse[2][11]
		ND	HD	kHz	°C	Amps	Cont.	1 Min.	3 Sec.		
20BW052[3]	5	45	–	2	50[4]	58.2	52	57	78	100	170M3691
		–	37.5	2	50[4]	46.9	46	69	92	100	170M3691
20BW098[3]	5	90	–	2	50[4]	110.7	98	108	127	160	170M3693
		–	75	2	50[4]	92.3	82	123	140	160	170M3693
20BW142[3]	6	132	–	2	50[4]	162.2	142	156	213	250	170M3695
		–	110	2	40[4]	134.9	119	179	238	315	170M3696

Notes

(1) Frames 0…4 temperature rating is for NEMA / UL Type Open. The adhesive top label must be removed to operate drive at this temperature. Frames 5 & 6 do not have a top label.

(2) The power source to common bus inverters must be derived from AC voltages 600V or less, as defined in NFPA70; Art 430-18 (NEC). Battery supplies or MG sets are not included. The following devices were validated to break current of the derived power DC Bus.
Disconnects: Allen-Bradley Bulletin 1494, 30-400A; 194, 30-400A; or ABB OESA, 600 & 800A; OESL, all sizes.
Fuses: Bussmann Type JKS, all sizes; Type 170M, Case Sizes 1, 2 and 3, or Ferraz Shawmut Type HSJ, all sizes. For any other devices, please contact the factory.

(3) Drives have dual current ratings; one for normal duty applications, and one for heavy duty applications. The drive can be operated at either rating.

(4) UL Type 12/IP54 (flange mount) heatsink ambient temperature rating is 40 °C/ambient of unprotected drive portion (inside enclosure) is 55 °C. The ambient temperature for the UL Type 12/IP54 stand-alone drives is 40 °C.

(5) Also applies to "P" voltage class.

(6) Also applies to "J" voltage class.

(7) Must remove top label and vent plate, drive enclosure rating is IP00, NEMA / UL Type Open.

(8) Two 630A Bussmann 170M6608 can also be used.

(9) Two 700A Bussmann 170M6611 can also be used.

(10) Bussmann or equivalent.

(11) See Fuse Certification and Test Data in PowerFlex AC Drives in Common Bus Configurations Application Guidelines, publication DRIVES-AT002, for fuse self-certification and test data for Bussmann 170M and JKS fuses recommended for the DC bus fusing.

Cable Recommendations

Power Cable Types Acceptable for 200…600 Volt Installations

A variety of cable types are acceptable for drive installations. For many installations, unshielded cable is adequate, provided it can be separated from sensitive circuits. As an approximate guide, allow a spacing of 0.3 meters (1 foot) for every 10 meters (32.8 feet) of length. In all cases, long parallel runs must be avoided. Do not use cable with an insulation thickness less than or equal to 15 mils (0.4mm/0.015 in.). Use Copper wire only. Wire gauge requirements and recommendations are based on 75° C. Do not reduce wire gauge when using higher temperature wire. See table below.

Location	Rating/Type	Description
Standard (Option 1)	600V, 90° C (194° F) XHHW2/RHW-2 Anixter B209500-B209507, Belden 29501-29507, or equivalent	• Four tinned copper conductors with XLP insulation. • Copper braid/aluminum foil combination shield and tinned copper drain wire. • PVC jacket.
Standard (Option 2)	Tray rated 600V, 90° C (194° F) RHH/RHW-2 Anixter OLF-7xxxxx or equivalent	• Three tinned copper conductors with XLPE insulation. • 5 mil single helical copper tape (25% overlap min.) with three bare copper grounds in contact with shield. • PVC jacket.
Class I & II; Division I & II	Tray rated 600V, 90° C (194° F) RHH/RHW-2 Anixter 7V-7xxxx-3G or equivalent	• Three bare copper conductors with XLPE insulation and impervious corrugated continuously welded aluminum armor. • Black sunlight resistant PVC jacket overall. • Three copper grounds on #10 AWG and smaller.

Unshielded

THHN, THWN or similar wire is acceptable for drive installation in dry environments provided adequate free air space and/or conduit fill rates limits are provided. **Do not use THHN or similarly coated wire in wet areas**. Any wire chosen must have a minimum insulation thickness of 15 Mils and should not have large variations in insulation concentricity.

Shielded/Armored Cable

Shielded cable contains all of the general benefits of multi-conductor cable with the added benefit of a copper braided shield that can contain much of the noise generated by a typical AC drive. Strong consideration for shielded cable should be given in installations with sensitive equipment such as weigh scales, capacitive proximity switches and other devices that may be affected by electrical noise in the distribution system. Applications with large numbers of drives in a similar location, imposed EMC regulations or a high degree of communications/ networking are also good candidates for shielded cable.

Shielded cable may also help reduce shaft voltage and induced bearing currents for some applications. In addition, the increased impedance of shielded cable may help extend the distance that the motor can be located from the drive without the addition of motor protective devices such as terminator networks.

Consideration should be given to all of the general specifications dictated by the environment of the installation, including temperature, flexibility, moisture characteristics and chemical resistance. In addition, a braided shield should be included and be specified by the cable manufacturer as having coverage of at least 75%. An additional foil shield can greatly improve noise containment.

A good example of recommended cable is Belden® 295xx (xx determines gauge). This cable has four (4) XLPE insulated conductors with a 100% coverage foil and an 85% coverage copper braided shield (with drain wire) surrounded by a PVC jacket.

Other types of shielded cable are available, but the selection of these types may limit the allowable cable length. Particularly, some of the newer cables twist 4 conductors of THHN wire and wrap them tightly with a foil shield. This construction can greatly increase the cable charging current required and reduce the overall drive performance. Unless specified in the individual distance tables as tested with the drive, these cables are not recommended and their performance against the lead length limits supplied is not known.

Maximum Motor Cable Lengths

For information on maximum motor cable lengths, refer to the Wiring and Grounding Guidelines for Pulse Width Modulated (PWM) AC Drives, publication DRIVES-IN001.

Power Wiring

The PowerFlex 700 has the following built in protective features to help simplify installation:

- Ground fault protection during start up and running ensures reliable operation
- Electronic motor overload protection increases motor life
- Removable MOV to ground and common mode capacitors to ground ensure compatibility with ungrounded systems. These devices must be disconnected if the drive is installed on a resistive grounded distribution system, an ungrounded distribution system, a B phase grounded distribution system or impedance grounded system. These devices must also be disconnected if the drive power source is a regenerative unit (such as a bus supply and brake) or is DC fed from an active converter.
- 6 kV transient protection provides increased robustness for 380...480V system voltages

There are many other factors that must be considered for optimal performance in any given application. The block diagram below highlights the primary installation considerations. Consult the Wiring and Grounding Guidelines for Pulse Width Modulated (PWM) AC Drives, publication DRIVES-IN001 for detailed recommendations on input power conditioning, dynamic braking, reflected wave protection and motor cable types.

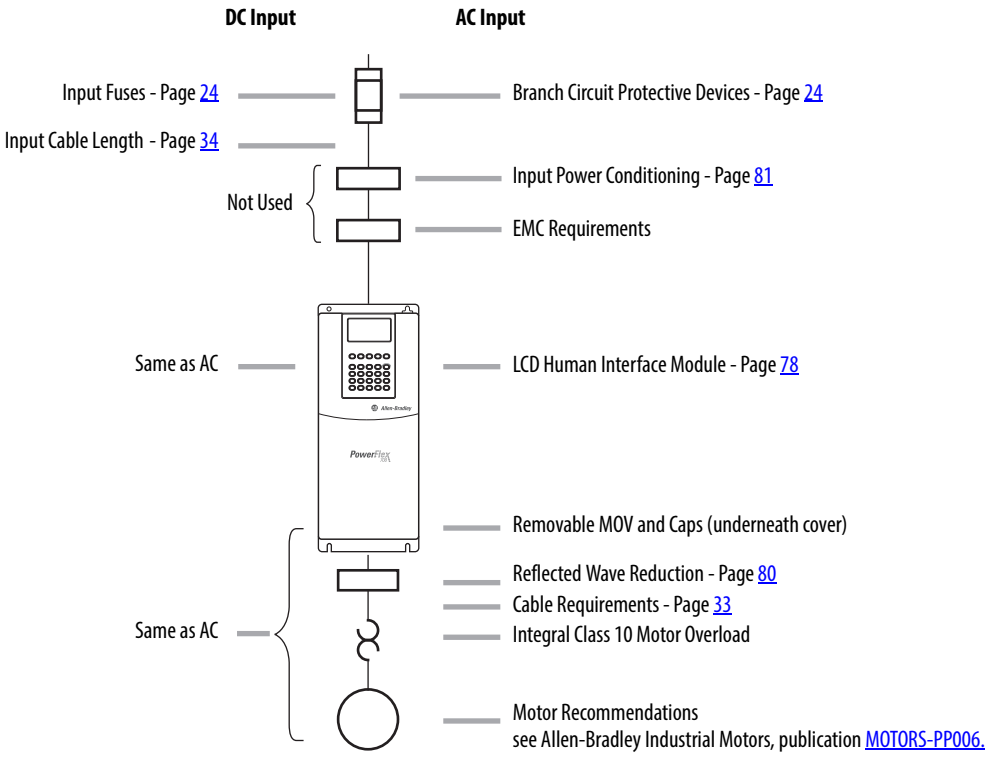

Terminal Blocks

Terminal Block Specifications

Refer to pages 36...38 for typical locations.

No.	Name	Frame	Description	Wire Size Range - See Note (3)		Torque	
				Maximum	Minimum	Maximum	Recommended
❶	Power Terminal Block	0 & 1	Input power and motor connections	4.0 mm^2 (12 AWG)	0.5 mm^2 (22 AWG)	1.7 N•m (15 lb.•in.)	0.8 N•m (7 lb.•in.)
		2	Input power and motor connections	10.0 mm^2 (8 AWG)	0.8 mm^2 (18 AWG)	1.7 N•m (15 lb.•in.)	1.4 N•m (12 lb.•in.)
		3	Input power and motor connections	25.0 mm^2 (3 AWG)	2.5 mm^2 (14 AWG)	3.6 N•m (32 lb.•in.)	1.8 N•m (16 lb.•in.)
			BR1, 2 terminals	10.0 mm^2 (8 AWG)	0.8 mm^2 (18 AWG)	1.7 N•m (15 lb.•in.)	1.4 N•m (12 lb.•in.)
		4	Input power and motor connections	35.0 mm^2 (3 AWG)	10.0 mm^2 (14 AWG)	4.0 N•m (35 lb.•in.)	4.0 N•m (35 lb.•in.)
		5 75 Hp, 480V 100 Hp, 600V	Input power, DC+, DC–, BR1, 2, PE, motor connections	50.0 mm^2 (1 AWG)	4.0 mm^2 (8 AWG)	See Note (5)	
		5 100 Hp	Input power, DC+, DC– and motor	70.0 mm^2 (2/0 AWG)	10.0 mm^2 (8 AWG)		
			BR1, 2, PE terminals	50.0 mm^2 (1/0 AWG)	4.0 mm^2 (12 AWG)		
		6	Input power, DC+, DC–, BR1, 2, PE, motor connections	150.0 mm^2 (300 MCM) *see Note* (4)	2.5 mm^2 (14 AWG)	6.0 N•m (52 lb.•in.)	6.0 N•m (52 lb.•in.)
		7	Input power, DC+, DC–, PE, motor connections	150.0 mm^2 (300 MCM) *see Note* (4)	2.5 mm^2 (14 AWG)	2.7 N•m (24 lb.•in.)	2.7 N•m (24 lb.•in.)
		8 & 9	Input power, DC+, DC–, PE, motor connections	300.0 mm^2 (600 MCM) *see Note* (4)	2.5 mm^2 (14 AWG)	10.0 N•m (87 lb.•in.)	10.0 N•m (87 lb.•in.)
		10	Input power, DC+, DC–, PE, motor connections	300.0 mm^2 (600 MCM) *see Note* (4)	2.5 mm^2 (14 AWG)	10.0 N•m (87 lb.•in.)	10.0 N•m (87 lb.•in.)
❷	SHLD Terminal	0…6	Terminating point for wiring shields	—	—	1.6 N•m (14 lb.•in.)	1.6 N•m (14 lb.•in.)
❸	AUX Terminal Block	0…4	Auxiliary control voltage PS+, PS– (1)(2)	1.5 mm^2 (16 AWG)	0.2 mm^2 (24 AWG)	—	—
		5…6		4.0 mm^2 (12 AWG)	0.5 mm^2 (22 AWG)	0.6 N•m (5.3 lb.•in.)	0.6 N•m (5.3 lb.•in.)
		7…10		4.0 mm^2 (12 AWG)	0.049 mm^2 (30 AWG)	0.6 N•m (5.3 lb.•in.)	0.6 N•m (5.3 lb.•in.)
❹	I/O Terminal Block	0…6	Signal & control connections	2.5 mm^2 (14 AWG)	0.30 mm^2 (22 AWG)	0.6 N•m (5.3 lb.•in.)	0.6 N•m (5.3 lb.•in.)
		7…10		4.0 mm^2 (12 AWG)	0.049 mm^2 (30 AWG)	0.6 N•m (5.3 lb.•in.)	0.6 N•m (5.3 lb.•in.)
❺	Encoder Terminal Block	0…10	Encoder power & signal connections	0.75 mm^2 (18 AWG)	0.196 mm^2 (24 AWG)	0.6 N•m (5.3 lb.•in.)	0.6 N•m (5.3 lb.•in.)
❻	Fan Terminal Block	5…6	User supplied fan voltage	4.0 mm^2 (12 AWG)	0.5 mm^2 (22 AWG)	0.6 N•m (5.3 lb.•in.)	0.6 N•m (5.3 lb.•in.)
		7		4.0 mm^2 (12 AWG)	0.5 mm^2 (22 AWG)	0.9 N•m (8.0 lb.•in.)	0.6 N•m (5.3 lb.•in.)
		8…10		4.0 mm^2 (12 AWG)	0.5 mm^2 (22 AWG)	0.6 N•m (5.3 lb.•in.)	0.6 N•m (5.3 lb.•in.)

(1) External control power: UL Installation-300V DC, ±10%, Non UL Installation-270…600V DC, ±10% (0…3 Frame-40W, 165 mA, 5 Frame-80W, 90 mA).

(2) An Auxiliary Control Power Supply such as the 20-24V-AUX can be used with 400/480 and 600/690 Volt drives with Vector Control. However, consult the factory before using an auxiliary power supply in these instances. **Important:** The Auxiliary Control Power Supply Must Not be used with any Standard Control drive or any 200/240V PowerFlex 700 drive, Standard or Vector Control.

(3) **Maximum/minimum sizes that the terminal block will accept -** these are not recommendations**.**

(4) If may be necessary to connect multiple wires in parallel to these terminals using multiple lugs.

(5) Refer to the terminal block label inside the drive.

Typical Terminal Block Location

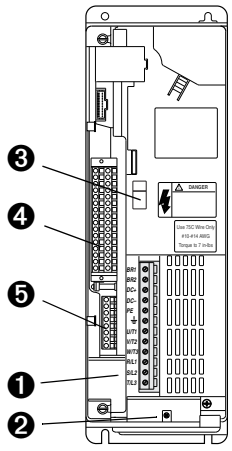

Frames 0…1

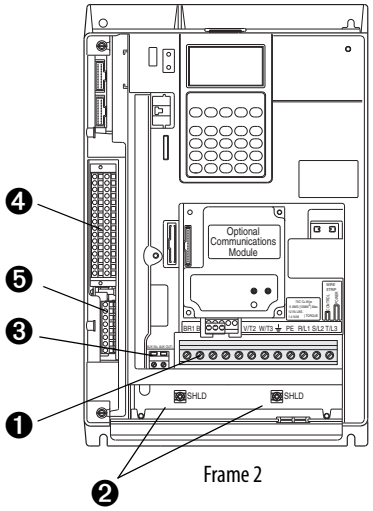

Frame 2

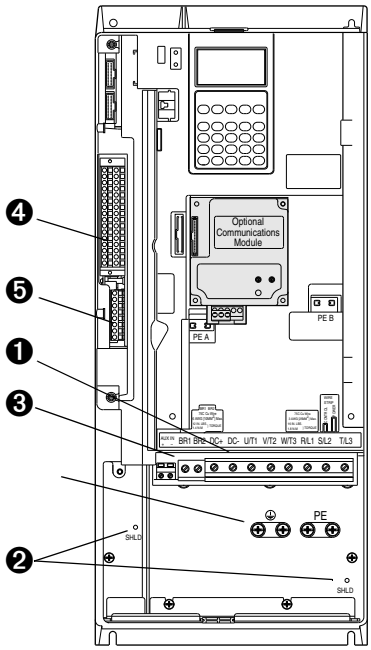

Frames 3…4

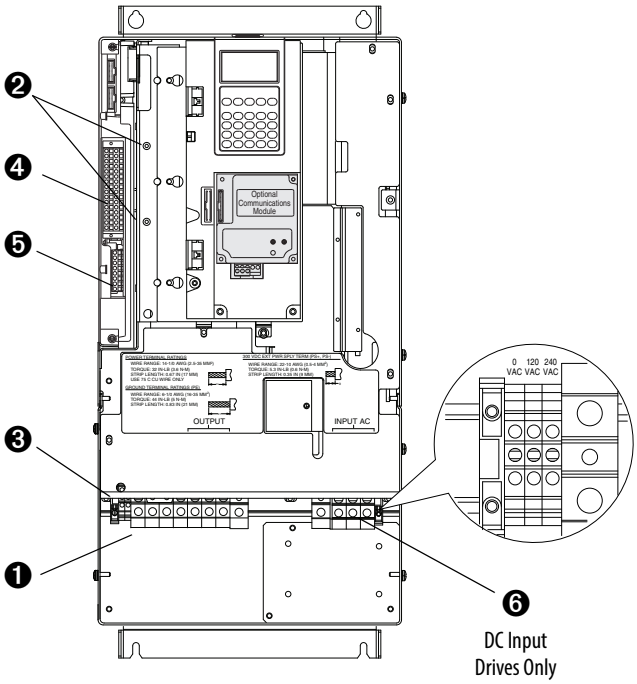

Frame 5

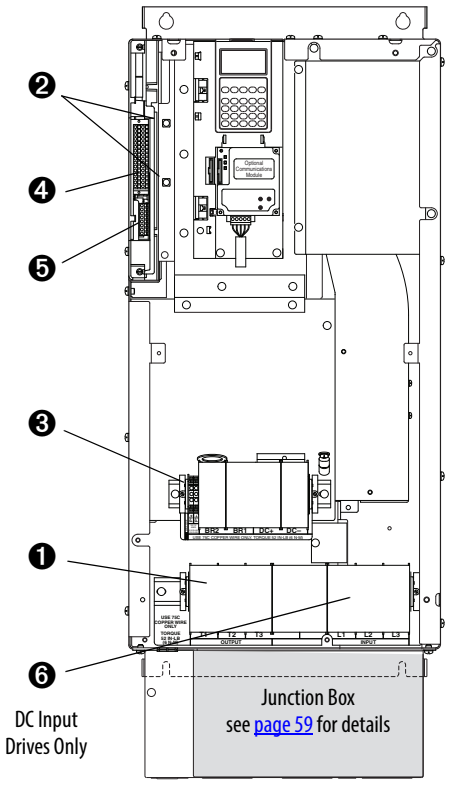

Frame 6

⏚ / PE

Typical Terminal Block Locations (continued)

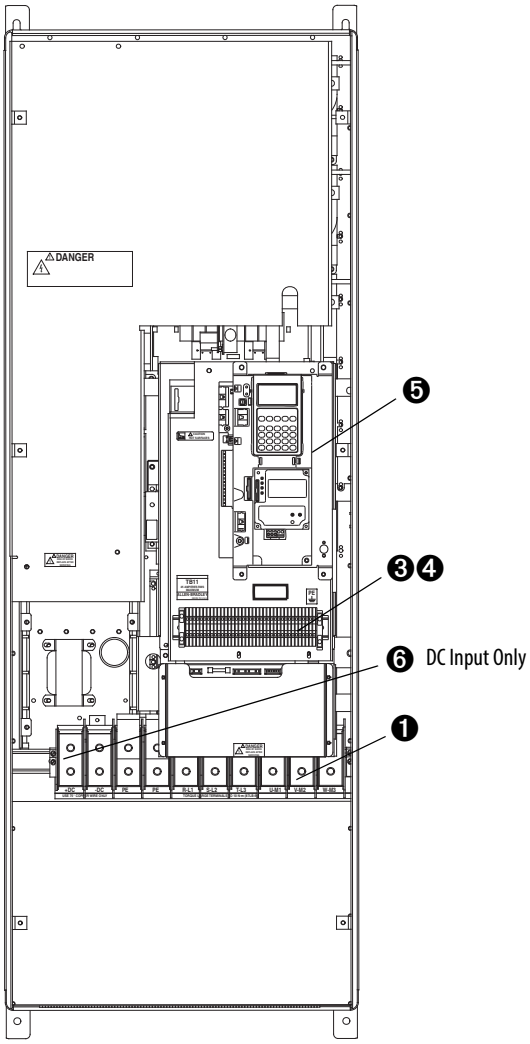

Frame 7

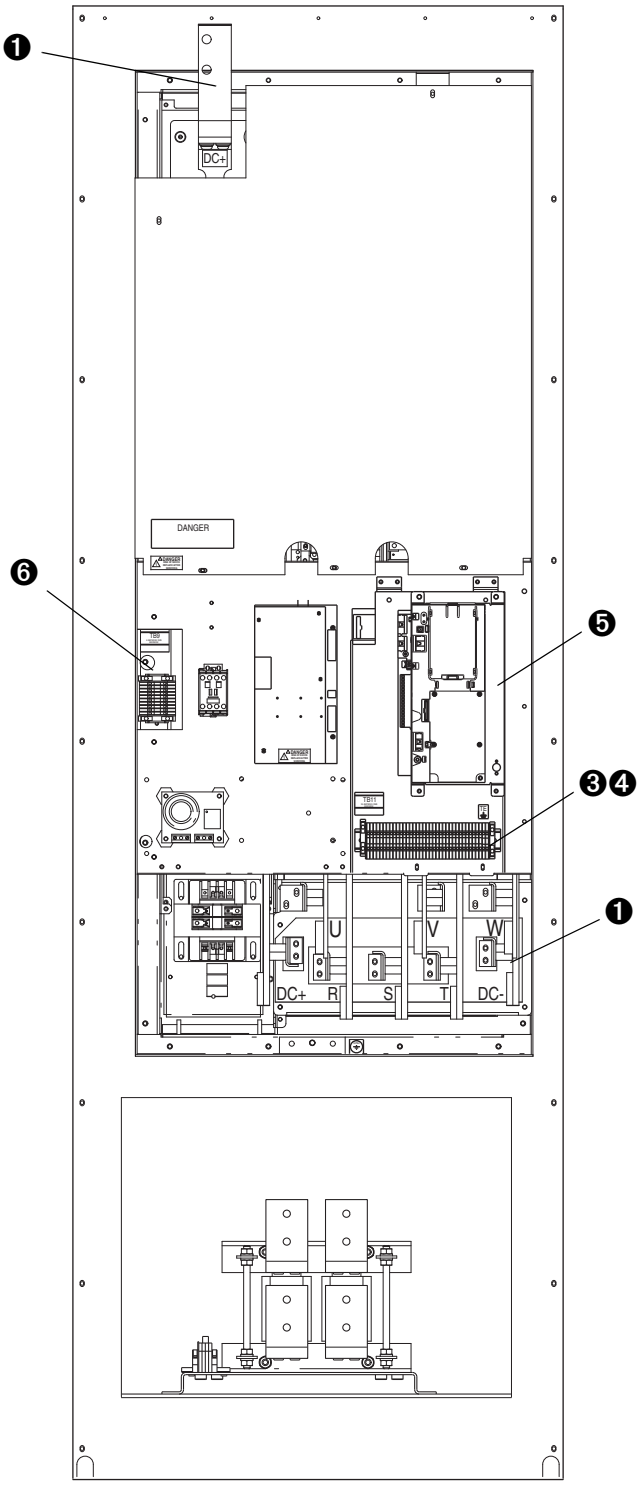

Frames 8…9

Typical Terminal Block Locations (continued)

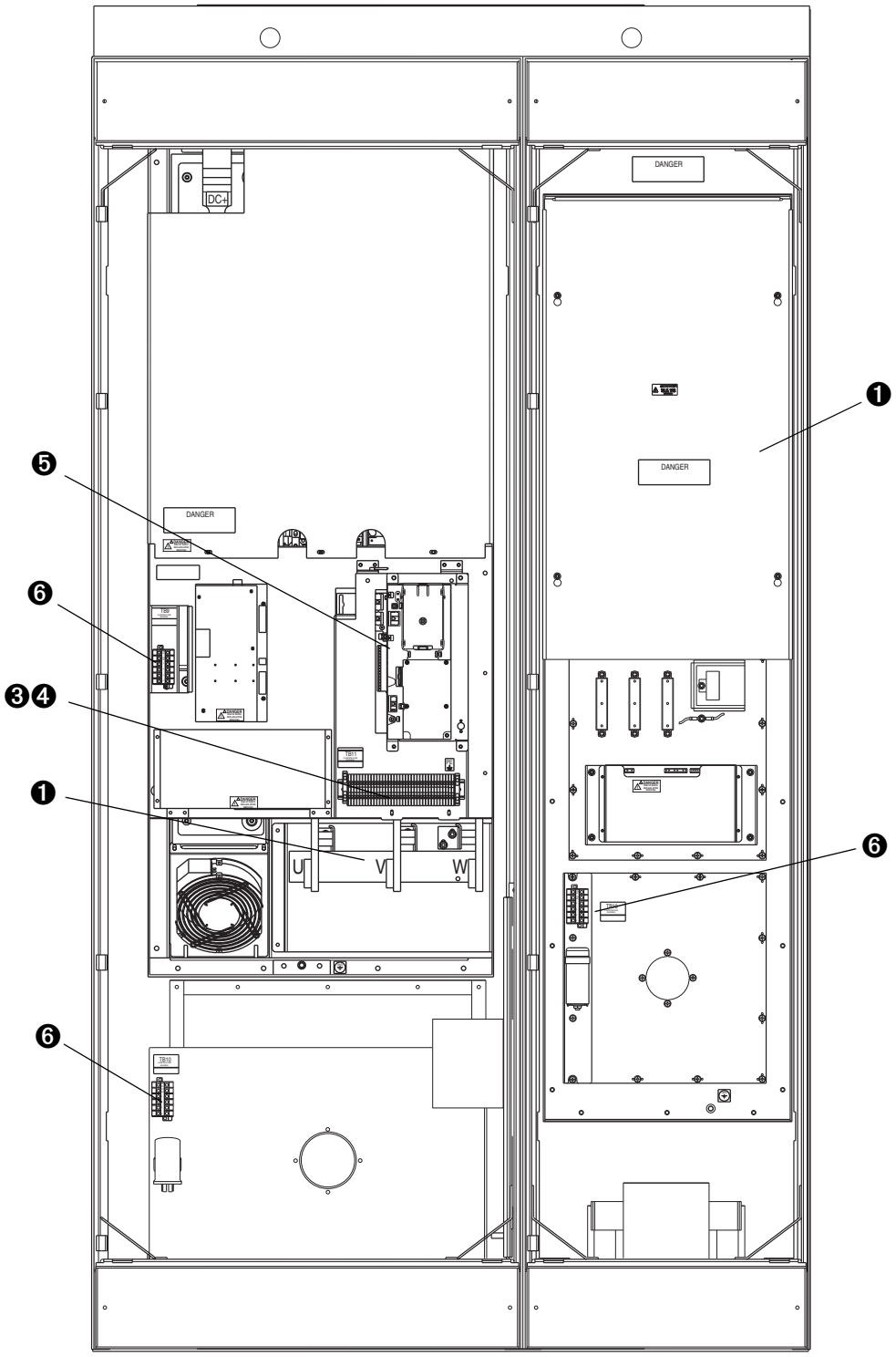

Frame 10
AC Input shown, DC Input Drives utilize the Inverter (Left) Bay only

Power Terminals

<table>
<tr><th>Frame</th><th>Terminal Block</th><th></th></tr>
<tr><td>0…1</td><td> 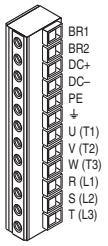
</td><td rowspan="3">* Note:
Shaded BR1 & BR2 Terminals will only be present on drives ordered with the Brake Option.</td></tr>
<tr><td>2</td><td> 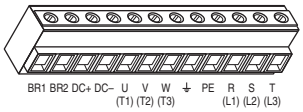
</td></tr>
<tr><td>3…4</td><td> 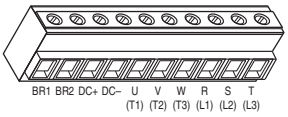
</td></tr>
<tr><td></td><td>AC Input</td><td>DC Input</td></tr>
<tr><td>5</td><td>75 Hp, Normal Duty
 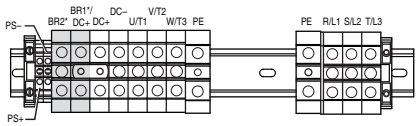
</td><td>75 Hp, Normal Duty
 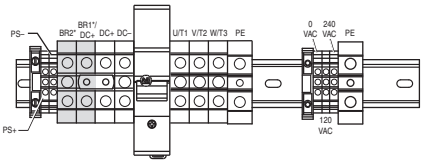
</td></tr>
<tr><td></td><td>100 Hp, Normal Duty
 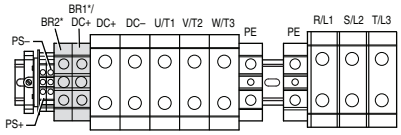
</td><td>100 Hp, Normal Duty
 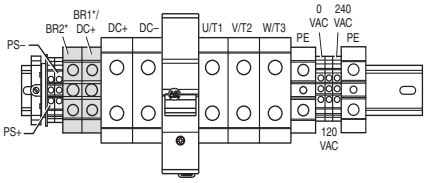
</td></tr>
<tr><td>6</td><td>125…200 Hp, Normal Duty
 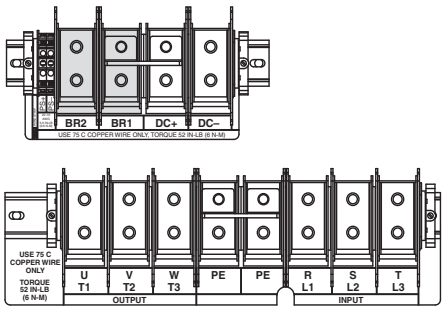
</td><td>125…200 Hp, Normal Duty
 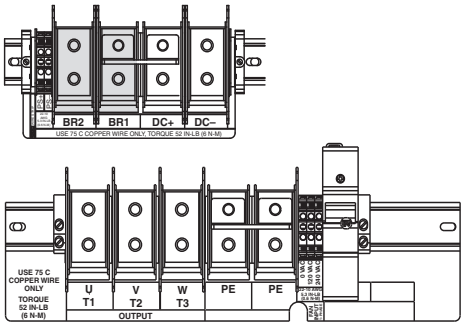
</td></tr>
</table>

Frame	Terminal Block	
	AC Input	**DC Input**
7	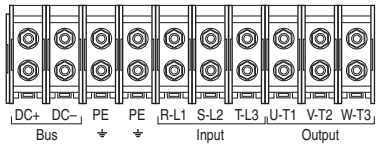	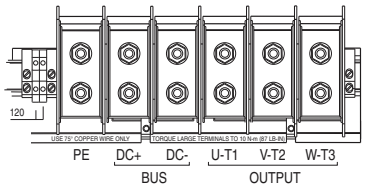
8…9	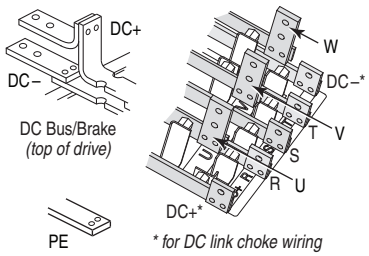	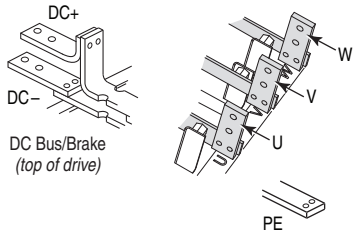
10	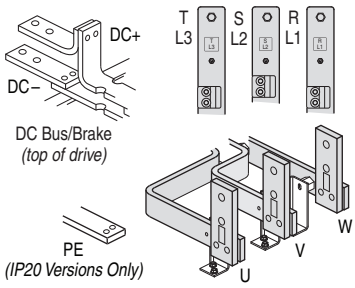	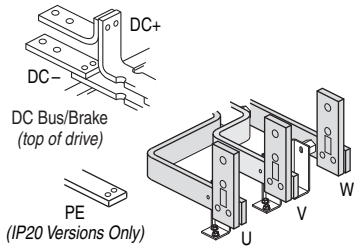

Fan Circuit Power Supply

Some drives utilize a fan transformer to power the internal fan(s). This transformer is sized specifically for the internal fan(s) and must not be used to power other circuitry. If your line voltage is different than the voltage class specified on the drive nameplate, changing the transformer taps will be required.

Frames 5…6 Fan Connections

Drive Type	Enclosure	**Rating** (120V AC)	No. of Fans	Connect at …
DC Input	IP00, NEMA / UL Type Open	100 VA (Frame 5) 138 VA (Frame 6)	1	Power Terminal Block Requires user supplied 120 or 240V AC. See page 36 for TB locations and terminal designations.
	IP20, NEMA / UL Type 1 IP54, NEMA / UL Type 12	100 VA (Frame 5) 138 VA (Frame 6)	1	
AC Input	IP00, NEMA / UL Type Open	100 VA (Frame 5) 138 VA (Frame 6)	1	N/A (Connected internally) A transformer matches the input line voltage to the internal fan voltage. If line voltage is different than the voltage class specified on the drive nameplate, the transformer taps may require changing. The transformer is behind the Power Terminal Block. Access is gained by releasing the terminal block from the rail and removing the transformer cover plate. 1. Locate the small metal tab at the bottom of the end terminal block. 2. Press the tab-in and pull the top of the block out. Repeat for the next block if desired. 3. Remove the transformer cover plate. 4. Select the appropriate transformer tap. 5. Replace cover and terminal block.
	IP20, NEMA / UL Type 1 IP54, NEMA / UL Type 12	100 VA (Frame 5) 138 VA (Frame 6)	1	
	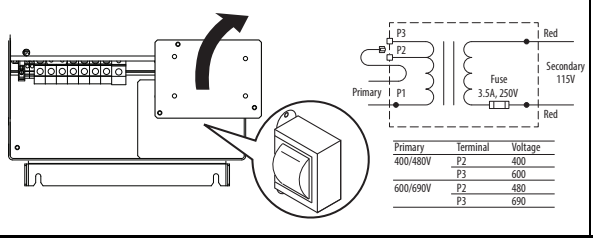			

Frame 7

Drive Type	Enclosure	Rating *(120VAC)*	No. of Fans	Connect at . . .
DC Input	IP00, NEMA / UL Type Open	250 VA	1	Power Terminal Block Requires user supplied 120V AC. See page 40 for location.
	IP20, NEMA / UL Type 1	250 VA	1	
AC Input	IP00, NEMA / UL Type Open	250 VA	1	N/A (Connected internally)
	IP20, NEMA / UL Type 1	250 VA	1	

Frame 8

Drive Type	Enclosure	Rating (120VAC)	No. of Fans	Connect at . . .
DC Input	IP00, NEMA / UL Type Open	500 VA	1	TB9 Requires user supplied 120V AC. See page 37 for TB location and page 42 for terminal designations.
	IP20, NEMA / UL Type 1	500 VA	1	
AC Input	IP00, NEMA / UL Type Open	500 VA	1	TB9 A transformer matches the input line voltage to the internal fan voltage. If line voltage is different than the voltage class specified on the drive nameplate, the transformer taps may require changing. 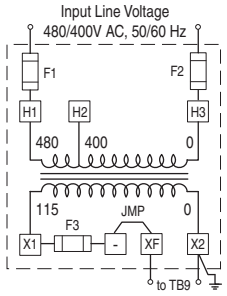
	IP20, NEMA / UL Type 1	500 VA	1	

Frame 9

Drive Type	Enclosure	Rating (120VAC)	No. of Fans	Connect at . . .
DC Input	IP00, NEMA / UL Type Open	500 VA	2	**TB9** Requires user supplied 120V AC for cap. bank fan and phase monitor. **Blower Terminal Block** Three-phase power must be supplied to the Blower TB. See page 37 for TB locations and page 42 for terminal designations.
	IP20, NEMA / UL Type 1	500 VA	2	
AC Input	IP00, NEMA / UL Type Open	500 VA	2	**TB9** A transformer matches the input line voltage to the internal voltage used for the capacitor fan and phase detector module. If the line voltage is different than the voltage class specified on the drive nameplate, the transformer taps may require changing. 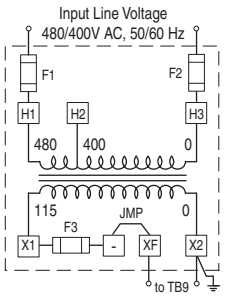
	IP20, NEMA / UL Type 1	500 VA	2	

Frame 9 Blower Operation

Frame 9 drives use a single-phase capacitor bank fan and a three-phase blower for cooling. Proper phasing must be supplied to terminals R, S, and T of the Power Terminal Block (AC drives) or the Blower Terminal Block (DC drives) to assure correct blower rotation. To verify this, a Phase Monitor is used.

Frame 10

Drive Type	Enclosure	Rating *(120VAC)*	No. of Fans	Connect at . . .
DC Input	IP00, NEMA / UL Type Open	1000 VA	2	TB9 & 10 Requires user supplied 120V AC. See page 38 for TB locations and page 42 for terminal designations.
	IP20, NEMA / UL Type 1	1000 VA	2	
AC Input	IP00, NEMA / UL Type Open	1000 VA	3	TB9, 10 & 12 Requires user supplied 120V AC. See page 38 for TB locations and page 42 for terminal designations.
	IP20, NEMA / UL Type 1	1000 VA	3	TB9, 10 & 12 A transformer matches the input line voltage to the internal fan voltage. If line voltage is different than the voltage class specified on the drive nameplate, the transformer taps may require changing. 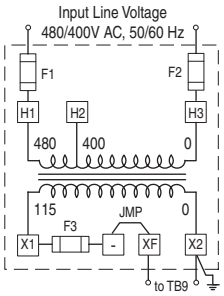

Fan/Blower Terminal Blocks - Frames 8…10

TB9, TB10

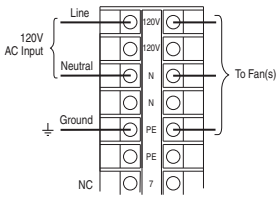

Frames 8…10

Blower TB

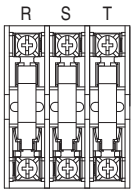

Frame 9 Only

TB12

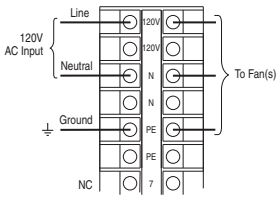

Frame 10, AC Input, IP20 Only

Fan Transformer Specifications/Fusing

Frame	Rating	Recommended Fuses	
		Primary (Quantity 2)	Secondary (Quantity 1)
8…9	500 VA	2.8A, 600V AC, KLDR/ATQR Type	6.25A, 250V AC, Time Delay
10	1000 VA	6A, 600V AC, KLDR/ATQR Type	9A, 250V AC, Time Delay

Three-Phase Blower Fusing

Frame	Recommended Fuses (Quantity 3)
9	5A, 600V AC, Time Delay

Additional Frame 10 Wiring Requirement for IP00 AC Input Drives

The Inverter and Converter sections of Frame 10 AC Input IP00, NEMA / UL Type Open drives are shipped separately. Once installed, the following connections are required.

1. DC Link Choke Wiring
   DC link chokes are supplied loose for customer mounting and wiring in IP00 drives. Refer to DC Link Chokes – Frames 8...10 below.
2. Thermistor Wiring
   Thermistor wiring is coiled loose in the Converter section for shipping. Locate the wire (labeled "To INV") and route through the enclosure wall. Connect it to the mating connector above the HIM cradle.
3. Ground the drive chassis.

DC Link Chokes – Frames 8…10

DC Link Chokes are supplied with Frame 8...10 AC input drives.

Frame	Type	DC Link Choke is supplied …
8…9	IP00, NEMA / UL Type Open	Mounted and wired
	IP20, NEMA / UL Type 1	Mounted and wired
	IP00, NEMA / UL Type Open Roll-In	Loose without cables
10	IP00, NEMA / UL Type Open	Loose without cables
	IP20, NEMA / UL Type 1	Mounted and wired

I/O Wiring

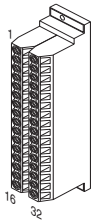

Standard Control Option – Frames 0…6 (1)

No.	Signal	Factory Default	Description
1	Anlg Volts In 1 (–)	(3)	Isolated (4), bipolar, differential, ±10V, 11 bit & sign, 88k ohm input impedance.
2	Anlg Volts In 1 (+)		
3	Anlg Volts In 2 (–)	(3)	Isolated (5), bipolar, differential, ±10V, 11 bit & sign, 88k ohm input impedance.
4	Anlg Volts In 2 (+)		
5	Pot Common	–	For (+) and (–) 10V pot references.
6	Anlg Volts Out 1 (–)	(3)	Bipolar, ±10V, 11 bit & sign, 2k ohm minimum load.
7	Anlg Volts Out 1 (+)		
8	Anlg Current Out 1 (–)	(3)	4-20mA, 11 bit & sign, 400 ohm maximum load.
9	Anlg Current Out 1 (+)		
10	Reserved for Future Use		
11	Digital Out 1 – N.C. (2)	Fault	Max. Resistive Load: 240V AC/30V DC – 1200VA, 150W Max. Current: 5A, Min. Load: 10mA Max. Inductive Load: 240V AC/30V DC – 840VA, 105W Max. Current: 3.5A, Min. Load: 10mA
12	Digital Out 1 Common		
13	Digital Out 1 – N.O. (2)	NOT Fault	
14	Digital Out 2 – N.C. (2)	NOT Run	
15	Digital Out 2 Common		
16	Digital Out 2 – N.O. (2)	Run	
17	Anlg Current In 1 (–)	(3)	Isolated (4), 4-20 mA, 11 bit & sign, 124 ohm input impedance.
18	Anlg Current In 1 (+)		
19	Anlg Current In 2 (–)	(3)	Isolated (5), 4-20 mA, 11 bit & sign, 124 ohm input impedance.
20	Anlg Current In 2 (+)		
21	–10V DC Pot Ref.	–	2k ohm minimum.
22	+10V DC Pot Ref.	–	
23	Reserved for Future Use		
24	+24V DC (6)	–	Drive supplied logic input power. (6)
25	Digital In Common	–	
26	24V Common (6)	–	Common for internal power supply.
27	Digital In 1	Stop - CF	115V AC, 50/60 Hz - Control & I/O Cat. No. option B Opto isolated Low State: less than 30V AC High State: greater than 100V AC, 5.0 mA 24V AC/DC, 50/60 Hz - Control & I/O Cat. No. option A Opto isolated Low State: less than 5V AC/DC High State: greater than 20V AC/DC, 11.2 mA DC Digital Input Impedance: 35k ohm
28	Digital In 2	Start	
29	Digital In 3	Auto/Man.	
30	Digital In 4	Speed Sel 1	
31	Digital In 5	Speed Sel 2	
32	Digital In 6	Speed Sel 3	

Vector Control Option – Frames 0…6 (1)

Signal	Factory Default	Description
Analog In 1 (–) (7)	(3)	Isolated (9), bipolar, differential, ±10V/0-20 mA, 11 bit & sign. For 0-20 mA, a jumper must be installed at terminals 17 & 18 (or 19 & 20). 88k ohm input impedance when configured for volt. & 95.3 ohm for current
Analog In 1 (+) (7)		
Analog In 2 (–) (7)		
Analog In 2 (+) (7)		
Pot Common	–	For (+) and (–) 10V pot references.
Analog Out 1 (–)	(3)	Single-ended bipolar (current output is not bipolar), ±10V/0-20 mA, 11 bit & sign, Voltage mode - limit current to 5 mA. Current mode - max. load is 400 ohms.
Analog Out 1 (+)		
Analog Out 2 (–)		
Analog Out 2 (+)		
HW PTC Input 1	–	1.8k ohm PTC, Internal 3.32k ohm pull-up resistor
Digital Out 1 – N.C. (2)	Fault	Max. Resistive Load: 240V AC/30V DC – 1200VA, 150W Max. Current: 5A, Min. Load: 10 mA Max. Inductive Load: 240V AC/30V DC – 840VA, 105W Max. Current: 3.5A, Min. Load: 10 mA
Digital Out 1 Common		
Digital Out 1 – N.O. (2)	NOT Fault	
Digital Out 2 – N.C. (2)	NOT Run	
Digital Out 2/3 Com.		
Digital Out 3 – N.O. (2)	Run	
Current In Jumper (7) – Analog In 1		Placing a jumper across terminals 17 & 18 (or 19 & 20) configures that analog input for current.
Current In Jumper (7) – Analog In 2		
–10V DC Pot Ref.	–	2k ohm minimum load.
+10V DC Pot Ref.	–	
HW PTC Input 2	–	See above
+24V DC (6)	–	Drive supplied logic input power. (6)
Digital In Common	–	
24V Common (6)	–	Common for internal power supply.
Digital In 1 (8)	Stop - CF	115V AC, 50/60 Hz - Control & I/O Cat. No. option D Opto isolated Low State: less than 30V AC High State: greater than 100V AC, 5.7 mA 24V DC - Control & I/O Cat. No. option C Opto isolated Low State: less than 5V DC High State: greater than 20V DC, 10 mA DC Digital Input Impedance: 21k ohm
Digital In 2 (8)	Start	
Digital In 3 (8)	Auto/Man.	
Digital In 4 (8)	Speed Sel 1	
Digital In 5 (8)	Speed Sel 2	
Digital In 6/Hardware Enable (8), see pg. 46	Speed Sel 3	

(1) Refer to the catalog number position "k" to determine your control option (A or B = standard control option, C or D = vector control option).

(2) Contacts in unpowered state. Any relay programmed as Fault or Alarm energizes (picks up) when power is applied to drive and deenergize (drop out) when a fault or alarm exists. Relays selected for other functions energize only when that condition exists and deenergizes when condition is removed.

(3) These inputs/outputs are dependant on a number of parameters.

(4) Differential Isolation - External source must be maintained at less than 160V with respect to PE. Input provides high common mode immunity.

(5) Differential Isolation - External source must be less than 10V with respect to PE.

(6) 150 mA maximum load designed to power digital inputs only. Not present on 115V versions.

(7) **Important:** 0…20 mA operation requires a jumper at terminals 17 & 18 (or 19 & 20). Drive damage can occur if jumper is not installed.

(8) A 10k ohm, 2 watt burden resistor must be installed on each digital input when using a triac type device. The resistor is installed between each digital input and neutral /common.

(9) Differential Isolation - External source must be maintained at less than 160V with respect to PE. Input provides high common mode immunity.

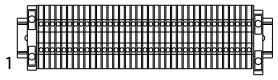

Vector Control Option – Frames 7…10

No.	Signal	Factory Default	Description
1	Analog In 1 (–) (1)	(3)	Isolated (4), bipolar, differential, ±10V/4-20mA, 11 bit & sign, 88k ohm input impedance. For 4-20mA, a jumper must be installed at terminals 17 & 18 (or 19 & 20).
2	Analog In 1 (+) (1)		
3	Analog In 2 (–) (1)		
4	Analog In 2 (+) (1)		
5	Pot Common	–	For (+) and (–) 10V pot references.
6	Analog Out 1 (–)	(3)	Bipolar (current output is not bipolar), ±10V/4-20mA, 11 bit & sign, voltage mode - limit current to 5 mA. Current mode - max. load resistance is 400 ohms.
7	Analog Out 1 (+)		
8	Analog Out 2 (–)		
9	Analog Out 2 (+)		
10	HW PTC Input 1	–	1.8k ohm PTC, Internal 3.32k ohm pull-up resistor
11	Digital Out 1 – N.C. (2)	Fault	Max. Resistive Load: 240V AC/30V DC – 1200VA, 150W Max. Current: 5A, Min. Load: 10mA Max. Inductive Load: 240V AC/30V DC – 840VA, 105W Max. Current: 3.5A, Min. Load: 10mA
12	Digital Out 1 Common		
13	Digital Out 1 – N.O. (2)	NOT Fault	
14	Digital Out 2 – N.C. (2)	NOT Run	
15	Digital Out 2/3 Com.		
16	Digital Out 3 – N.O. (2)	Run	
17	Current In Jumper (1) – Analog In 1		Placing a jumper across terminals 17 & 18 (or 19 & 20) configures that analog input for current.
18			
19	Current In Jumper (1) – Analog In 2		
20			
21	–10V Pot Reference	–	2k ohm minimum load.
22	+10V Pot Reference	–	
23	HW PTC Input 2	–	See above
24	+24V DC (5)	–	Drive supplied logic input power. (5)
25	Digital In Common	–	
26	24V Common (5)	–	Common for internal power supply.
27	Digital In 1	Stop - CF	115V AC, 50/60 Hz - Control & I/O Cat. No. option D Opto isolated Low State: less than 30V AC High State: greater than 100V AC 24V DC - Control & I/O Cat. No. option C Opto isolated Low State: less than 5V DC High State: greater than 20V DC 11.2 mA DC
28	Digital In 2	Start	
29	Digital In 3	Auto/Man.	
30	Digital In 4	Speed Sel 1	
31	Digital In 5	Speed Sel 2	
32	Digital In 6/Hardware Enable, see pg. 46	Speed Sel 3	
33	Digital Out 4 – N.C.	Fault	Dedicated fault output - Not user configurable. Relay energizes (picks up) when power is applied to the drive and deenergizes (drops out) when a fault exists. See Terminals 11-16 for specs.
34	Digital Out 4 Common		
35	Digital Out 4 – N.O.	NOT Fault	
PS+	Aux. Control Power (+)		
PS-	Aux. Control Power (–)		
PE	PE Ground		PE Ground
PE	PE Ground		PE Ground

(1) **Important:** 0…20mA operation requires a jumper at terminals 17 & 18 (or 19 & 20). Drive damage can occur if jumper is not installed.

(2) Contacts in unpowered state. Any relay programmed as Fault or Alarm energizes (picks up) when power is applied to the drive and deenergizes (drops out) when a fault or alarm exists. Relays selected for other functions energize only when that condition exists and deenergize when condition is removed.

(3) These inputs/outputs are dependant on a number of parameters.

(4) Differential Isolation - External source must be maintained at less than 160V with respect to PE. Input provides high common mode immunity.

(5) 150mA maximum Load. Not present on 115V versions.

Hardware Enable Circuitry (Vector Control Only)

By default, the user can program a digital input as an Enable input. The status of this input is interpreted by drive software. If the application requires the drive to be disabled without software interpretation, a "dedicated" hardware enable configuration can be utilized. This is done by removing a jumper and wiring the enable input to "Digital In 6."

Encoder Interface Option (Vector Control Only)

Encoder Terminal Designations

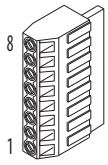

No.	Description (refer to specifications on page 11)	
8	+12V (1) DC Power	Internal power source 250 mA.
7	+12V (1) DC Return (Common)	
6	Encoder Z (NOT)	Pulse, marker or registration input. (2)
5	Encoder Z	
4	Encoder B (NOT)	Quadrature B input.
3	Encoder B	
2	Encoder A (NOT)	Single channel or quadrature A input.
1	Encoder A	

(1) Jumper selectable +5/12V is available on 20B-ENC-1 Encoder Boards.

(2) Z channel can be used as a pulse input while A & B are used for encoder.

Sample Encoder Wiring

I/O	Connection Example
Encoder Power –Internal Drive Power Internal (drive) 12V DC, 250mA (1)	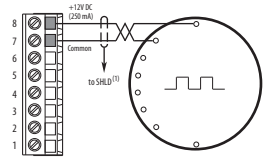
Encoder Signal –Single-Ended, Dual Channel (2)	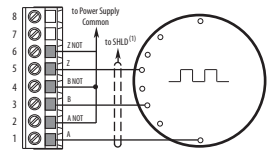

I/O	Connection Example
Encoder Power –External Power Source	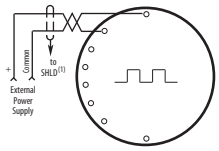
Encoder Signal –Differential, Dual Channel	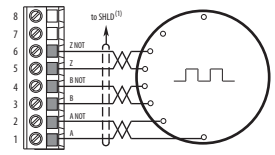

(1) SHLD connection is on drive chassis (see page 36).

(2) Example applies to 20B-ENC-1 only.

I/O Wiring Examples – Standard & Vector Control Options

Input/Output	Connection Example	Required Parameter Changes
Potentiometer Unipolar Speed Reference (1) 10k Ohm Pot. Recommended (2k Ohm Minimum)	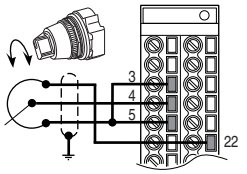	• Adjust Scaling: Parameters 91/92 and 325/326 • View Results: Parameter 002
Joystick Bipolar Speed Reference (1) ±10V Input	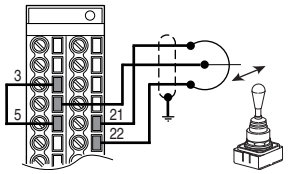	• Set Direction Mode: Parameter 190 = "1, Bipolar" • Adjust Scaling: Parameters 91/92 and 325/326 • View Results: Parameter 002
Analog Input Bipolar Speed Reference ±10V Input	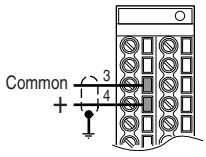	• Set Direction Mode: Parameter 190 = "1, Bipolar" • Adjust Scaling: Parameters 91/92 and 325/326 • View Results: Parameter 002
Analog Voltage Input Unipolar Speed Reference 0 to +10V Input	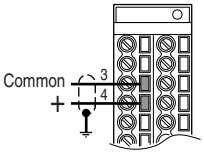	• Configure Input with parameter 320 • Adjust Scaling: Parameters 91/92 and 325/326 • View results: Parameter 002
Analog Current Input Unipolar Speed Reference **Standard** 4-20 mA Input	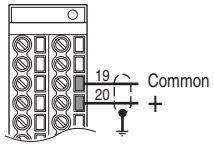	• Configure Input for Current: Parameter 320, Bit 1 = "1, Current" • Adjust Scaling: Parameters 91/92 and 325/326 • View Results: Parameter 002
Analog Current Input Unipolar Speed Reference **Vector** 0-20 mA Input	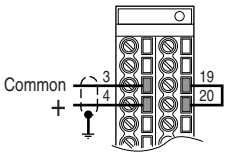	• Configure Input for Current: Parameter 320 and add jumper at appropriate terminals • Adjust Scaling: Parameters 91/92 and 325/326 • View results: Parameter 002
Analog Input, PTC **Vector** PTC OT set > 5V PTC OT cleared < 4V PTC Short < 0.2V	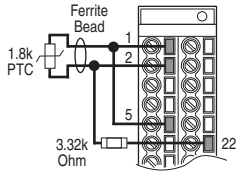	• Set Fault Config 1: Parameter 238, bit 7 = "Enabled" • Set Alarm Config 1: Parameter 259, bit 11 = "Enabled" • View Drive Alarm 1: Parameter 211, bit 11 = "True"
HW PTC Input Series B Only PTC OT set > 5V PTC OT cleared < 4V PTC Short < 0.2V	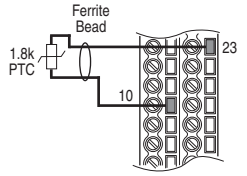	• Set Fault Config 1: Parameter 238, bit 13 = "Enabled" • Set Alarm Config 1: Parameter 259, bit 18 = "Enabled" • View Status: Drive Alarm 1: Parameter 211, bit 18 = "True"

(1) Refer to the PowerFlex 700 User Manual for important bipolar wiring information.

Input/Output	Connection Example	Required Parameter Changes
Analog Output ±10V, 0-20 mA Bipolar +10V Unipolar *(shown)* Standard Control 4-20 mA Unipolar *(use term. 8 & 9)*	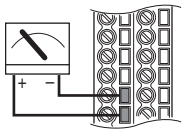	• Configure with Parameter 340 • Select Source Value: Parameter 384, [Digital Out1 Sel] • Adjust Scaling: Parameters 343/344
2-Wire Control Non-Reversing(1) 24V DC internal supply	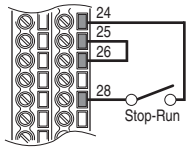	• Disable Digital Input:#1: Parameter 361 = "0, Unused" • Set Digital Input #2: Parameter 362 = "7, Run" • Set Direction Mode: Parameter 190 = "0, Unipolar"
2-Wire Control Reversing(1) External supply (I/O Board dependent)	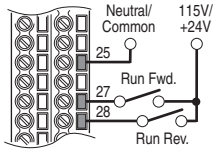	• Set Digital Input:#1: Parameter 361 = "8, Run Forward" • Set Digital Input #2: Parameter 362 = "9, Run Reverse"
3-Wire Control Internal supply	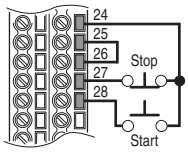	• No Changes Required
3-Wire Control External supply (I/O Board dependent). Requires 3-wire functions only ([Digital In1 Sel]). Using 2-wire selections will cause a type 2 alarm.	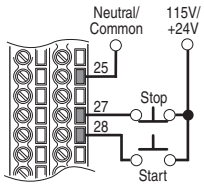	• No Changes Required •
Digital Input PLC Output Card (Board dependent).	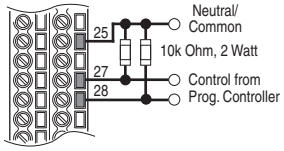	• No Changes Required •
Digital Output Relays shown in powered state with drive faulted. See page 44. Standard Control 1 relay at terminals 14-16. Vector Control 2 relays at terminals 14-16.	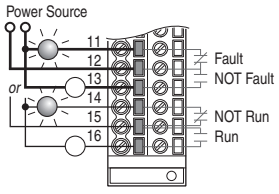	• Select Source to Activate: Parameters 380/384
Enable Input	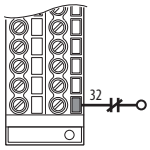	• Standard Control Configure with parameter 366 • Vector Control Configure with parameter 366 For dedicated hardware Enable: Remove Jumper J10 (see page 46)

(1) **Important:** Programming inputs for 2 wire control deactivates all HIM Start buttons.

Mounting

Frame/Rating Cross Reference

AC Input

	208/240		400V		480V		600V		690V	
Frame	**ND Hp**	**HD Hp**	**ND kW**	**HD kW**	**ND Hp**	**HD Hp**	**ND Hp**	**HD Hp**	**ND kW**	**HD kW**
0	0.5	0.33	0.37	0.25	0.5	0.33	1	0.5	–	–
	1	0.75	0.75	0.55	1	0.75	2	1	–	–
	–	–	1.5	0.75	2	1.5	3	2	–	–
	–	–	2.2	1.5	3	2	5	3	–	–
	–	–	4	2.2	5	3	7.5	5	–	–
	–	–	5.5	4	7.5	5	–	–	–	–
1	2	1.5	7.5	5.5	10	7.5	10	7.5	–	–
	3	2	11	7.5	15	10	15	10	–	–
	5	3	–	–	–	–	–	–	–	–
	7.5	5	–	–	–	–	–	–	–	–
2	10	7.5	15	11	20	15	20	15	–	–
	–	–	18.5	15	25	20	25	20	–	–
3	15	10	22	18.5	30	25	30	25	–	–
	20	15	30	22	40	30	40	30	–	–
	–	–	37	30	50	40	50	40	–	–
4	25	20	45	37	60	50	60	50	–	–
	30	25	–	–	–	–	–	–	–	–
5	40	30	55	45	75	60	75	60	45	37.5
	50	40	75	55	100	75	100	75	55	45
	–	–	–	–	–	–	–	–	75	55
	–	–	–	–	–	–	–	–	90	75
6	60	50	90	75	125	100	125	100	110	90
	75	60	110	90	150	125	150	125	132	110
	100	75	132	110	200	150	–	–	–	–
7	–	–	160	150	250	200	–	–	–	–
	–	–	180	180	250	250	–	–	–	–
8	–	–	200	180	300	250	–	–	–	–
	–	–	240	200	350	300	–	–	–	–
	–	–	280	240	400	350	–	–	–	–
	–	–	300	280	450	400	–	–	–	–
	–	–	350	300	500	450	–	–	–	–
9	–	–	400	350	600	500	–	–	–	–
10	–	–	500	400	700	600	–	–	–	–

DC Input

	325V		540V		650V		810V		932V	
Frame	**ND Hp**	**HD Hp**	**ND kW**	**HD kW**	**ND Hp**	**HD Hp**	**ND Hp**	**HD Hp**	**ND kW**	**HD kW**
0	0.5	0.33	–	–	0.5	0.33	1	0.75	–	–
	1	0.75	–	–	1	0.75	2	1.5	–	–
	–	–	–	–	2	1.5	3	2	–	–
	–	–	–	–	3	2	5	3	–	–
	–	–	–	–	5	3	7.5	5	–	–
	–	–	–	–	7.5	5	10	7.5	–	–
1	2	1.5	0.37	0.25	10	7.5	15	10	–	–
	3	2	0.75	0.55	15	10	–	–	–	–
	5	3	1.5	0.75	–	–	–	–	–	–
	7.5	5	2.2	1.5	–	–	–	–	–	–
	–	–	4	2.2	–	–	–	–	–	–
	–	–	5.5	4	–	–	–	–	–	–
	–	–	7.5	5.5	–	–	–	–	–	–
	–	–	11	7.5	–	–	–	–	–	–
2	10	7.5	15	11	20	15	20	15	–	–
	–	–	18.5	15	25	20	25	20	–	–
3	15	10	22	18.5	30	25	30	25	–	–
	20	15	30	22	40	30	40	30	–	–
	–	–	37	30	50	40	50	40	–	–
4	25	20	45	37	60	50	60	50	–	–
	30	25	–	–	–	–	–	–	–	–
5	40	30	55	45	75	60	100	75	45	37.5
	50	40	–	–	100	75	–	–	90	75
6	60	50	75	55	125	100	150	125	132	110
	75	60	90	75	150	125	–	–	–	–
	100	75	110	90	–	–	–	–	–	–
	–	–	132	110	200	150	–	–	–	–
7	–	–	160	150	250	200	–	–	–	–
	–	–	180	180	250	250	–	–	–	–
8	–	–	200	180	300	250	–	–	–	–
	–	–	240	200	350	300	–	–	–	–
	–	–	280	240	400	350	–	–	–	–
	–	–	300	280	450	400	–	–	–	–
	–	–	350	300	500	450	–	–	–	–
9	–	–	400	350	600	500	–	–	–	–
10	–	–	500	400	700	600	–	–	–	–

Operating Temperatures

PowerFlex 700 drives are designed to operate at 0°to 40° C ambient. To operate the drive in installations between 41° and 50° C, see the information below and refer to pages 25...32 for exceptions.

Acceptable Surrounding Air Temperature & Required Actions

Enclosure Rating	Temperature Range	Drive
IP20, NEMA / UL Type 1 (with Top Label) (1)	0…40 °C (0…104 °F)	Frames 0…4, All Ratings
	0…50 °C (0…122 °F)	Frames 5…6, Most Ratings (2)
IP20, NEMA / UL Type Open (Top Label Removed) (1)	0…50 °C (0…122 °F)	Frames 0…6, Most Ratings (2)
	0…45 °C (0…113 °F)	20BC072 Only
IP00, NEMA / UL Type Open (Top Label & Vent Plate Removed)	0…50 °C (0…122 °F)	20BC072 Only (3)
Flange Mount Front: IP00, NEMA / UL Type Open Back/Heat Sink: IP54, NEMA / UL Type 12	0…55 °C (0…131 °F) Front (Inside Encl.) 0…40 °C (0…104 °F) Back (External)	Frames 5…6
Stand-alone/Wall Mount IP54, NEMA / UL Type 12	0…40 °C (0…104 °F)	Frames 5…6
IP20, NEMA / UL Type 1	0…40 °C (0…104 °F)	Frames 7…10
IP00, NEMA / UL Type Open/Flange Mount Front: IP00, NEMA / UL Type Open Back/Heat Sink: IP54, NEMA12	0…65 °C (0…149 °F) Control Board 0…40 °C (0…104 °F) Heat Sink Entry Air	Frames 7…10
Roll In Front: IP00, NEMA / UL Type Open Back/Heat Sink: IP54, NEMA12	0…65 °C (0…149 °F) Control Board 0…40 °C (0…104 °F) Heat Sink Entry Air	Frames 8…9

(1) Removing the adhesive top label from the drive changes the NEMA / UL enclosure rating from Type 1 to Open. Frames 5 and 6 do not have a top label.

(2) Refer to pages 25…32 for exceptions.

(3) To remove vent plate (see page 53 for location), lift top edge of plate from the chassis. Rotate the plate out from the back plate.

Minimum Mounting Clearances

Frames 0…6

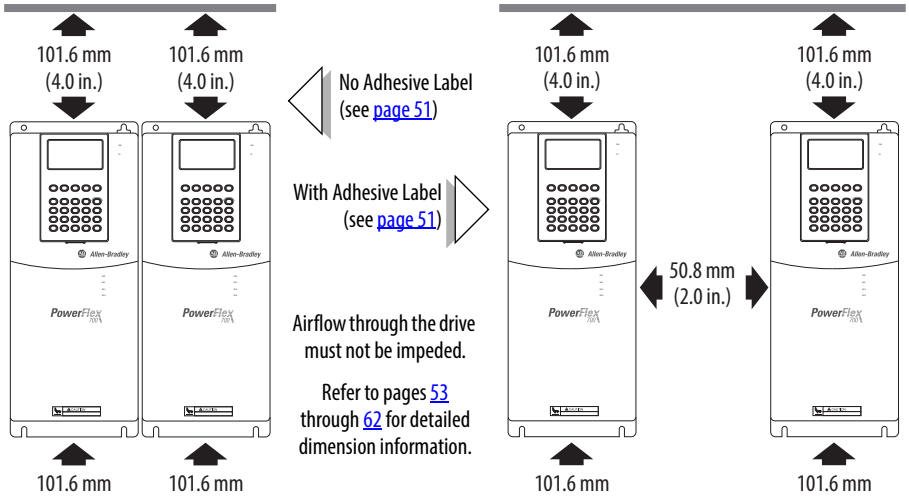

Specified vertical clearance requirements (indicated above) are intended to be from the drive to the closest object that can restrict airflow through the drive heat sink and chassis. The drive must be mounted in a vertical orientation as shown and must make full contact with the mounting surface. Do not use standoffs or spacers. In addition, inlet air temperature must not exceed the product specification.

Frames 7…10

The drive must be mounted with sufficient space at the top, sides, and front of the cabinet to allow for proper heat dissipation.

Frame	Recommendations
7	Minimum of 152 mm (6.0 in.) at the top and bottom of the enclosure and 102 mm (4.0 in.) on the sides. Flange Mount - Minimum of 152 mm (6.0 in.) at the back of the enclosure (flange mount surface to wall).
8…10	Minimum of 152 mm (6.0 in.) at the top of the enclosure. Additionally, allow a minimum of 102 mm (4.0 in.) on each side OR 152 mm (6.0 in.) in the back. Flange Mount - Minimum of 102 mm (4.0 in.) on each side.

Dimensions and Weights

Frames 0…3 – IP20, NEMA / UL Type 1

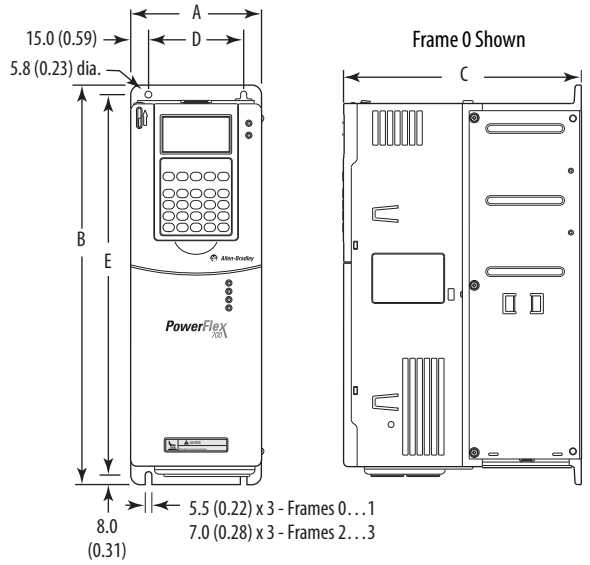

Frame	A	B	C	D	E	Weight (1) kg (lbs.)	
						Drive	Drive & Packaging
0	110.0 (4.33)	336.0 (13.23)	200.0 (7.87)	80.0 (3.15)	320.0 (12.60)	5.22 (11.5)	8.16 (18)
1	135.0 (5.31)	336.0 (13.23)	200.0 (7.87)	105.0 (4.13)	320.0 (12.60)	7.03 (15.5)	9.98 (22)
2	222.0 (8.74)	342.5 (13.48)	200.0 (7.87)	192.0 (7.56)	320.0 (12.60)	12.52 (27.6)	15.20 (33.5)
3	222.0 (8.74)	517.5 (20.37)	200.0 (7.87)	192.0 (7.56)	495.0 (19.49)	18.55 (40.9)	22.68 (50)

(1) Weights include HIM and Standard I/O.

Dimensions are in millimeters and (inches)

.

Frame 0

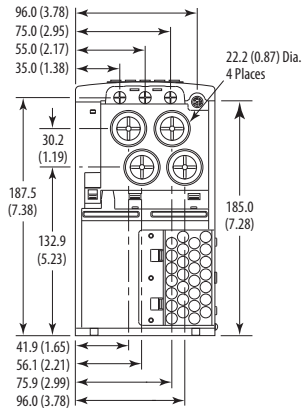

Frame 1

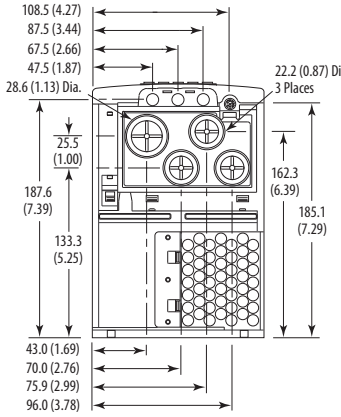

Frame 2

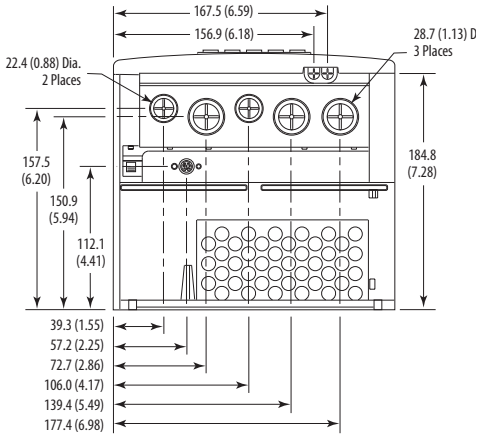

Frame 3
All *except* 50 Hp, 480V (37 kW, 400V)

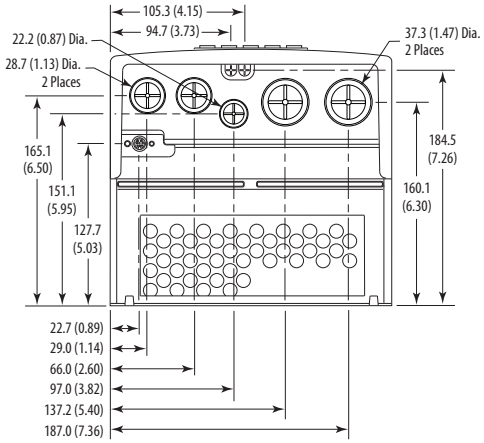

Frame 3
50 Hp, 480V (37 kW, 400V) Normal Duty Drive

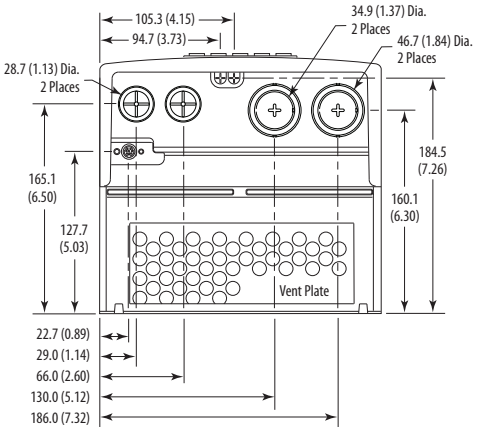

Frame 4 – IP20, NEMA / UL Type 1

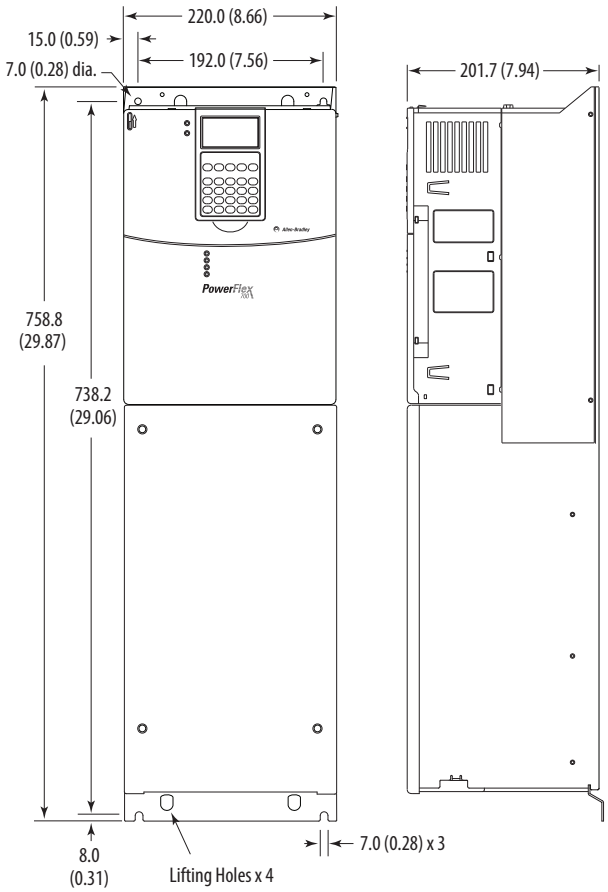

Dimensions are in millimeters and (inches)

Frame	Approx. Weight (1) kg (lbs.)	
	Drive	Drive & Packaging
4	24.49 (54.0)	29.03 (64.0)

(1) Weights include HIM and Standard I/O.

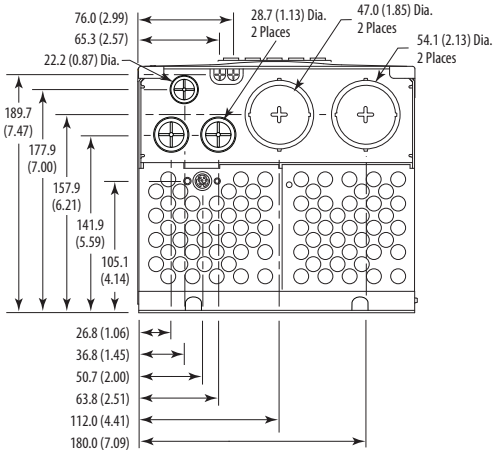

Frame 5 – IP20, NEMA / UL Type 1

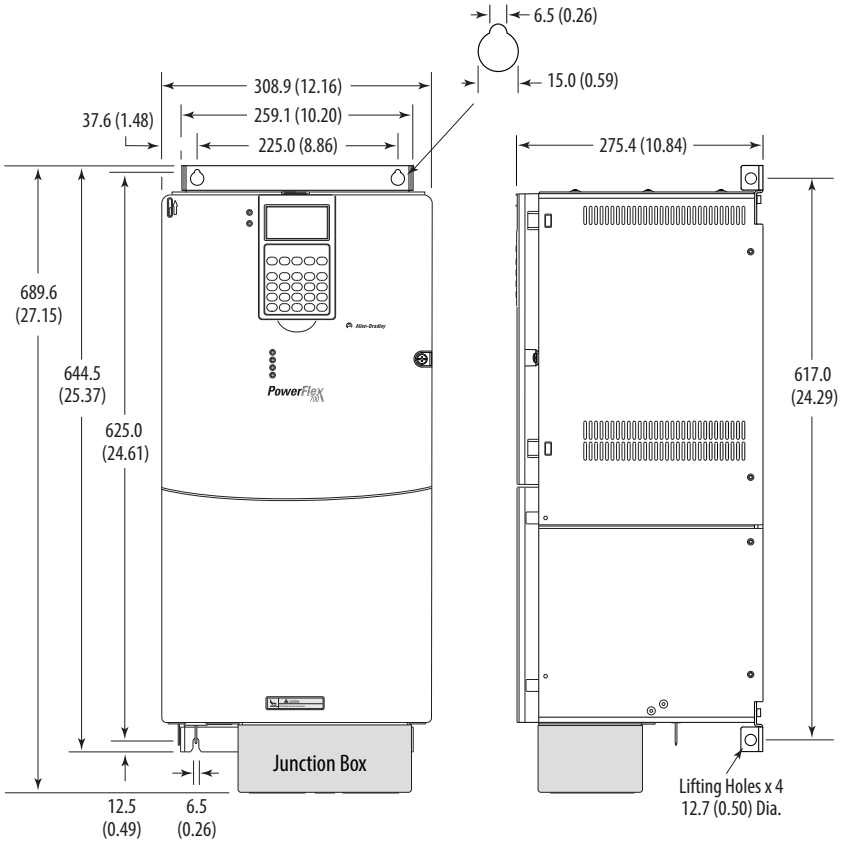

Dimensions are in millimeters and (inches)

Frame	Approx. Weight (1) kg (lbs.)	
	Drive	Drive & Packaging
5	37.19 (82.0)	49.50 (109.0)

(1) Weights include HIM and Standard I/O. Add 2.70 kg (6.0 lbs.) for the 20BC140 drive.

30 kW, 208V (40 Hp, 240V)
55 kW, 400V (75 Hp, 480V)
45/55/75 kW, 690V (75 Hp, 600V)

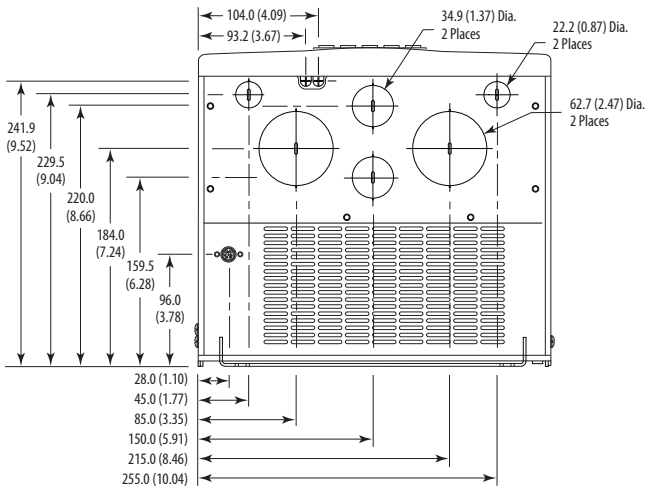

37 kW, 208V (50 Hp, 240V)
75 kW, 400V (100 Hp, 480V)
90kW, 690V (100 Hp, 600V)

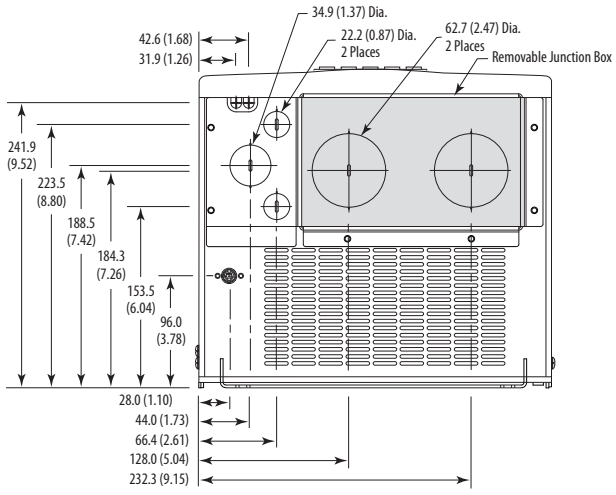

Frame 5 – IP54, NEMA Type 12 Standalone (400…690V drives only)

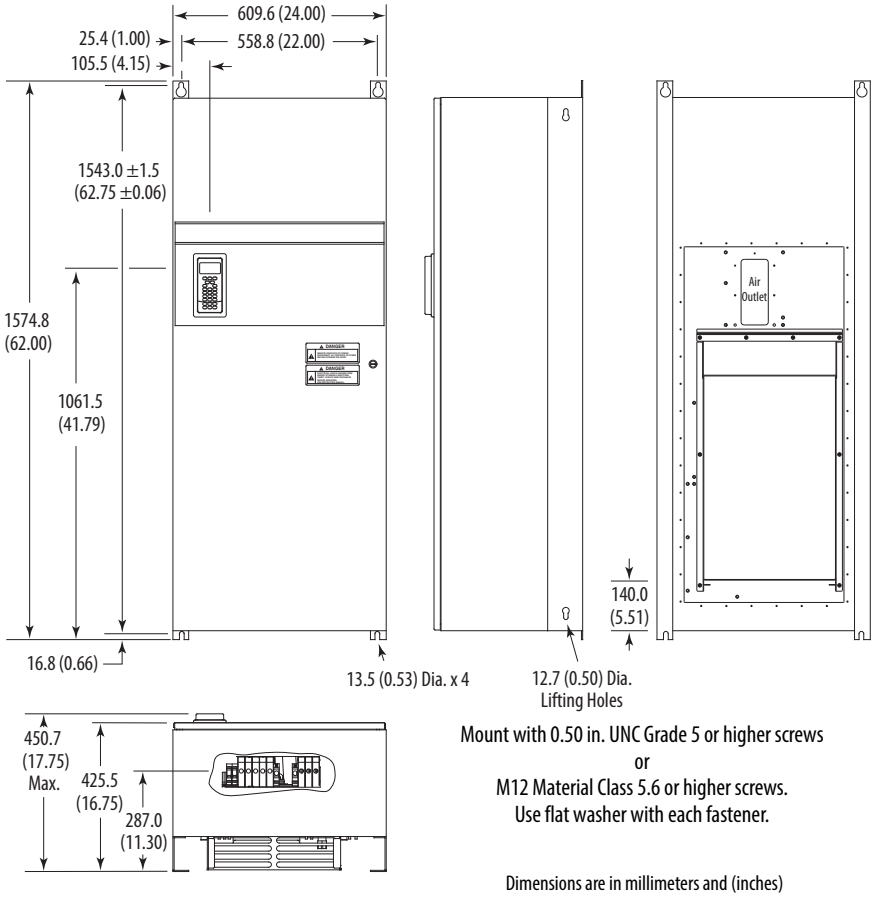

Frame	Description	Approx. Weight (1) kg (lbs.)	
		Drive	Drive & Packaging
5	Standalone	102.51 (226.0)	154.68 (341.0)

(1) Weights include HIM and Standard I/O.

Frame 5 – IP54, NEMA Type 12 Flange Mount (400…690V drives only)

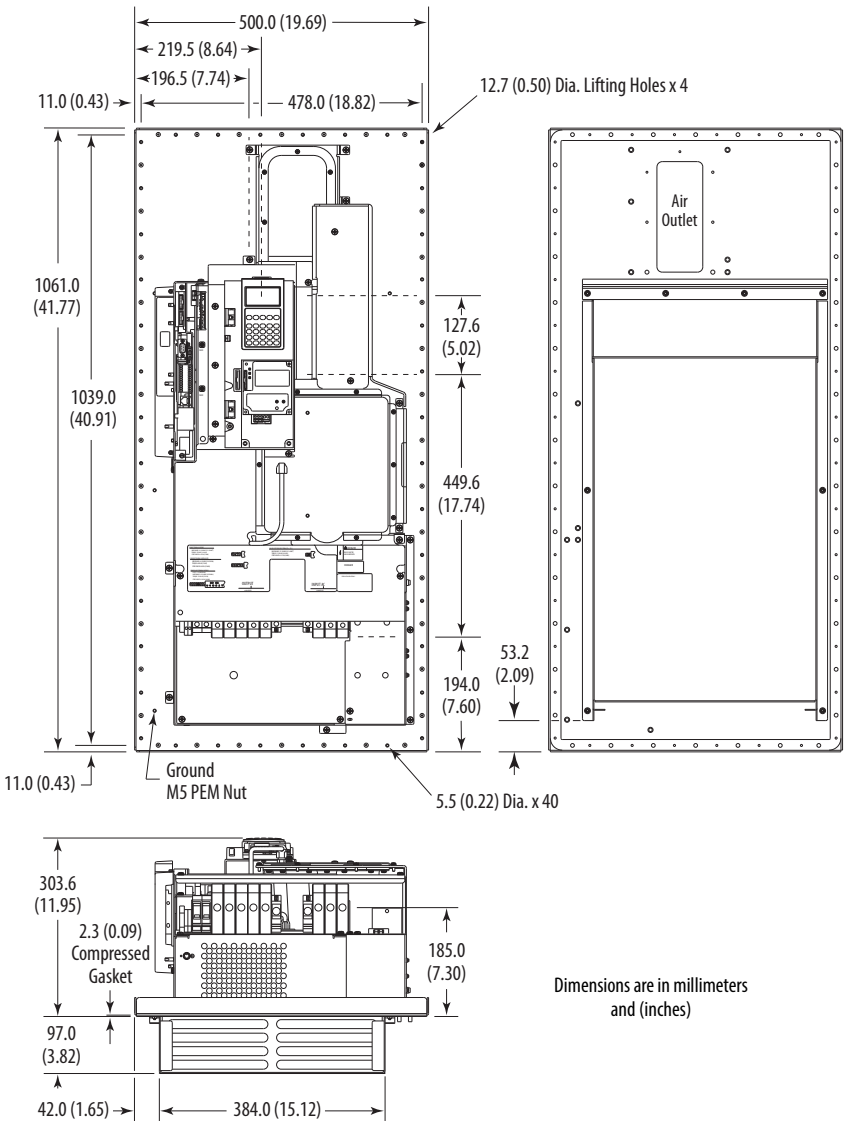

Frame	Description	Approx. Weight (1) kg (lbs.)	
		Drive	Drive & Packaging
5	Flange Mount	61.69 (136.0)	81.65 (180.0)

(1) Weights include HIM and Standard I/O.

Frame 5 – Flange Mount Cutout

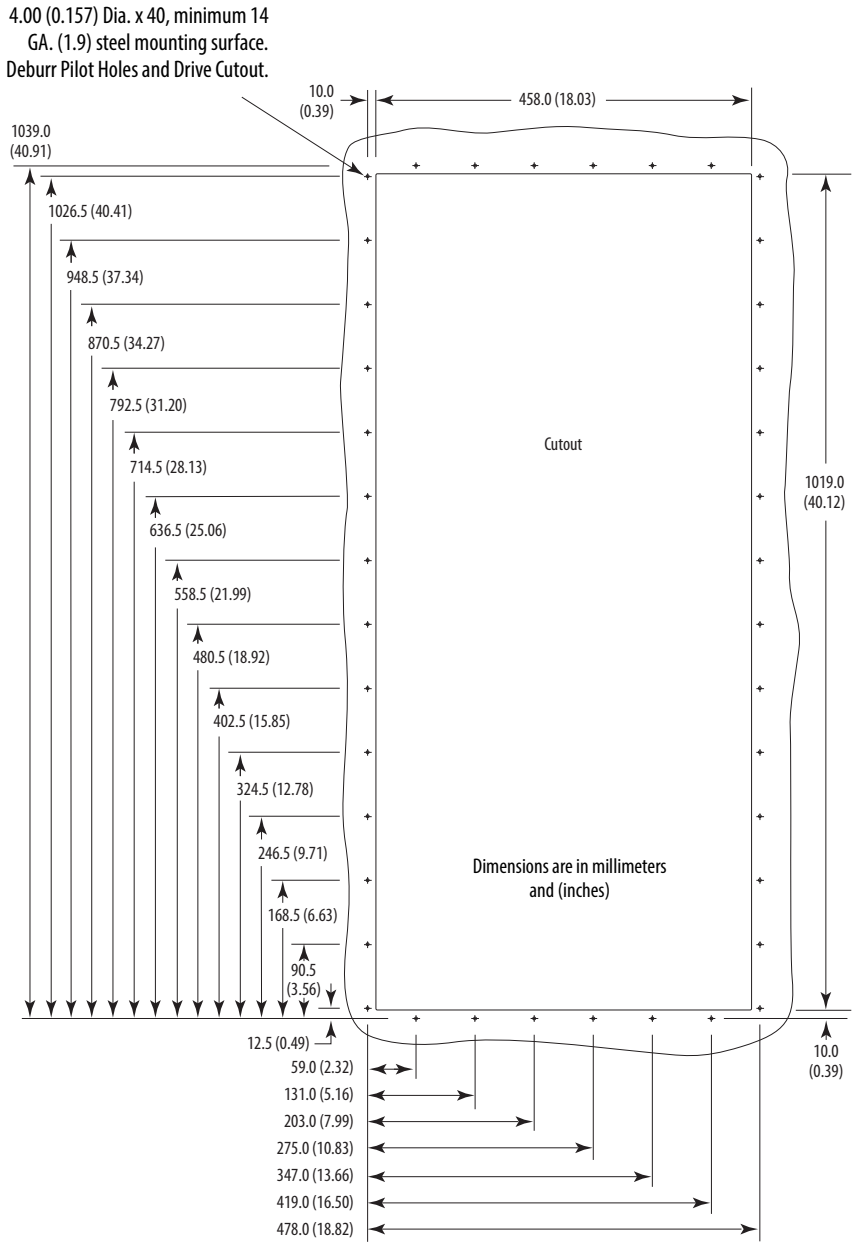

Frame 6 – IP20, NEMA / UL Type 1

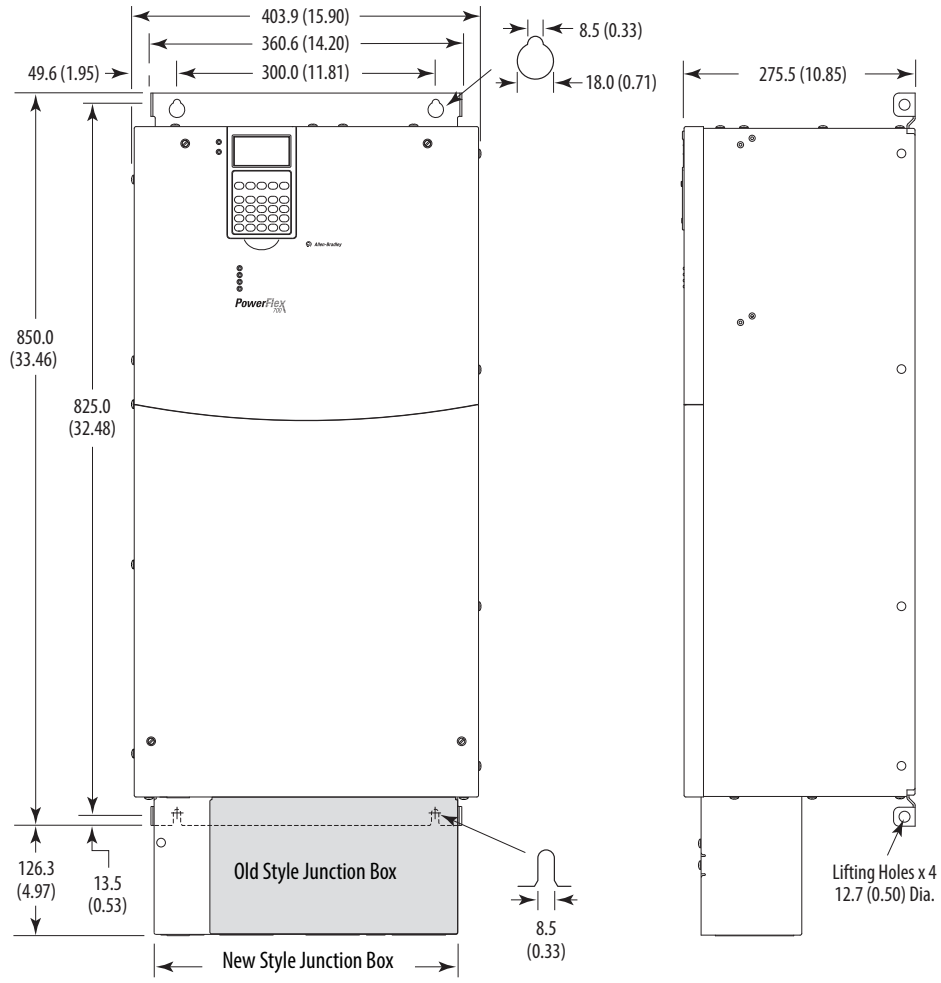

Junction Box can be removed if drive is mounted in a cabinet

Dimensions are in millimeters and (inches)

Frame	Approx. Weight (1) kg (lbs.)	
	Drive	Drive & Packaging
6	71.44 (157.5)	100.9 (222.0)

(1) Weights include HIM and Standard I/O. Add 13.60 kg (30.0 lbs.) for; 20BB260, 20BC260 and 20BD248.

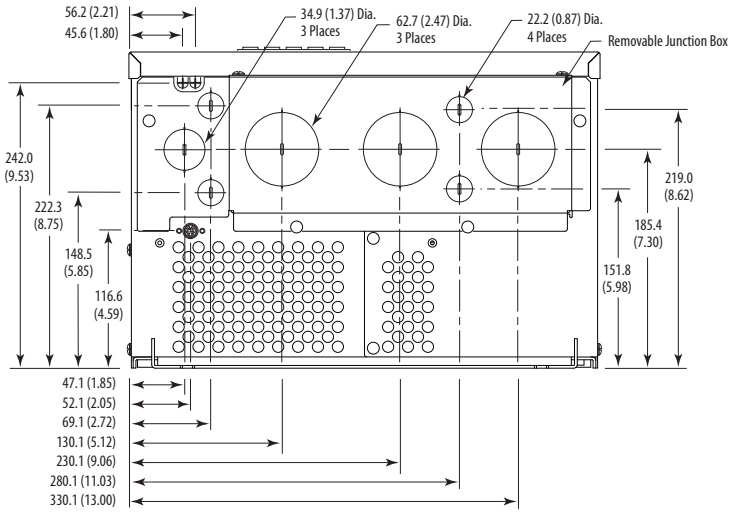

Frame 6 – IP54, NEMA Type 12 Standalone (400…690V drives only)

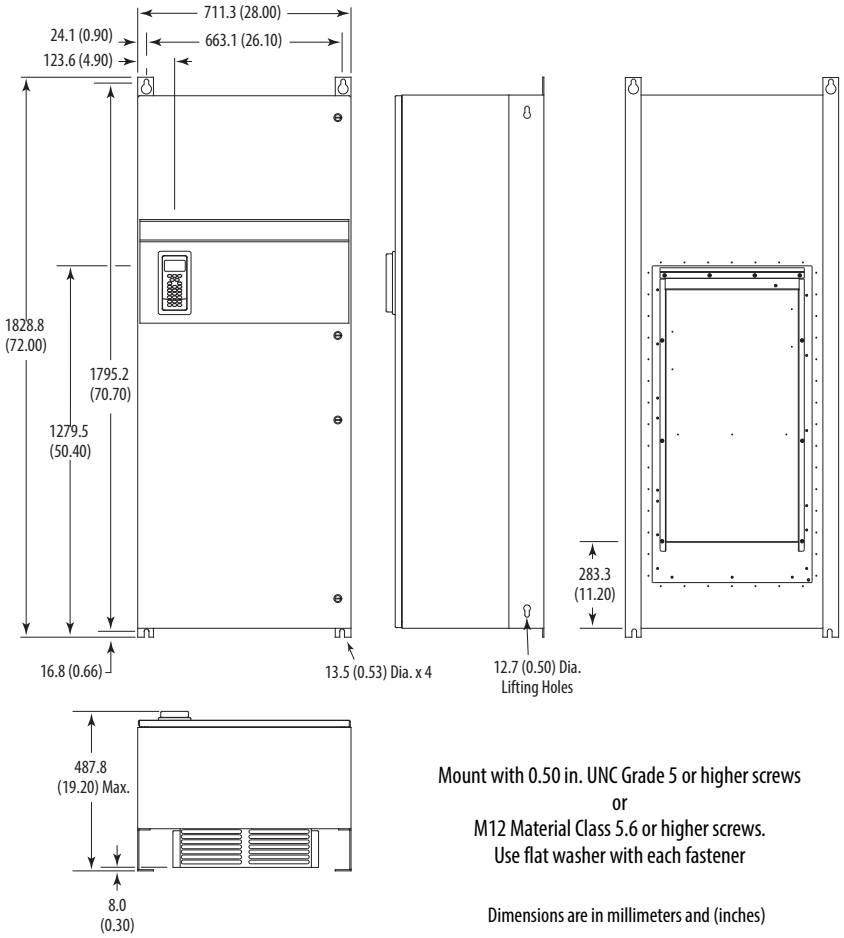

Frame	Description	Approx. Weight [1] kg (lbs.)	
		Drive	Drive & Packaging
6	Standalone	176.90 (390.0)	229.07 (505.0)

(1) Weights include HIM and Standard I/O.

Frame 6 – IP54, NEMA Type 12 Flange Mount (400…690V drives only)

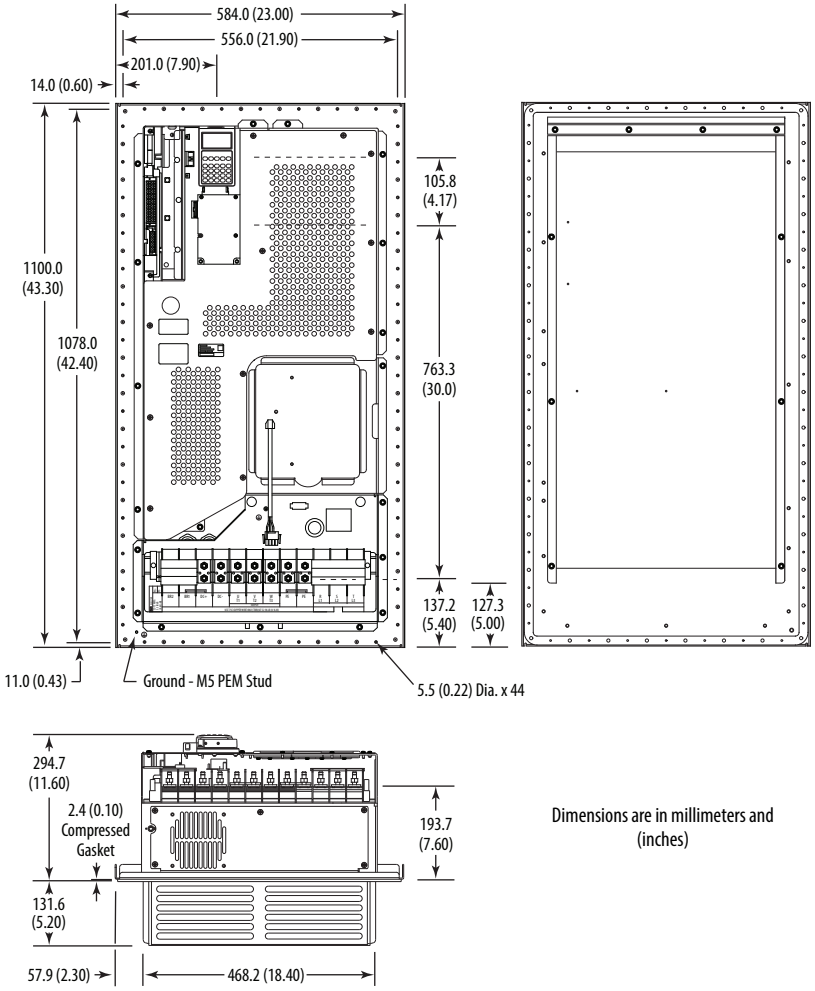

Dimensions are in millimeters and (inches)

Frame	Description	Approx. Weight (1) kg (lbs.)	
		Drive	Drive & Packaging
6	Flange Mount	99.79 (220.0)	119.75 (264.0)

(1) Weights include HIM and Standard I/O.

Frame 6 – Flange Mount Cutout

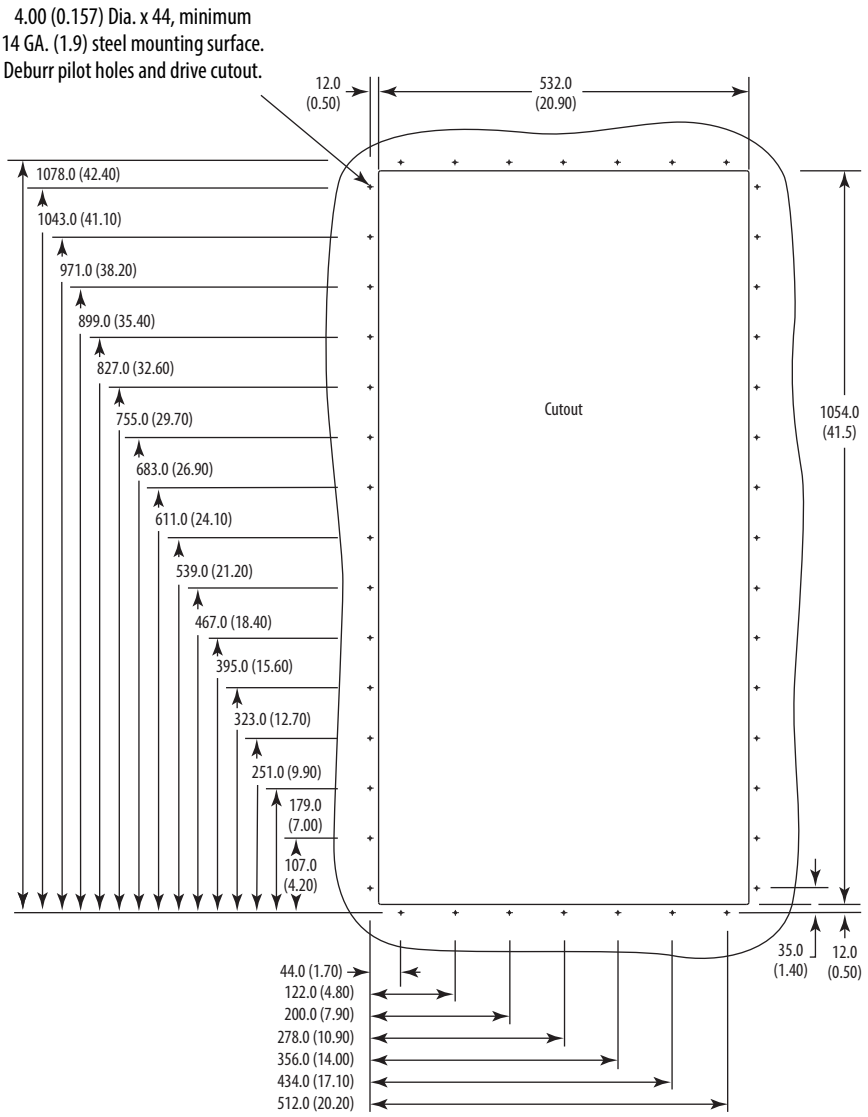

Dimensions are in millimeters and (inches)

Frame 7 – IP20, NEMA / UL Type 1

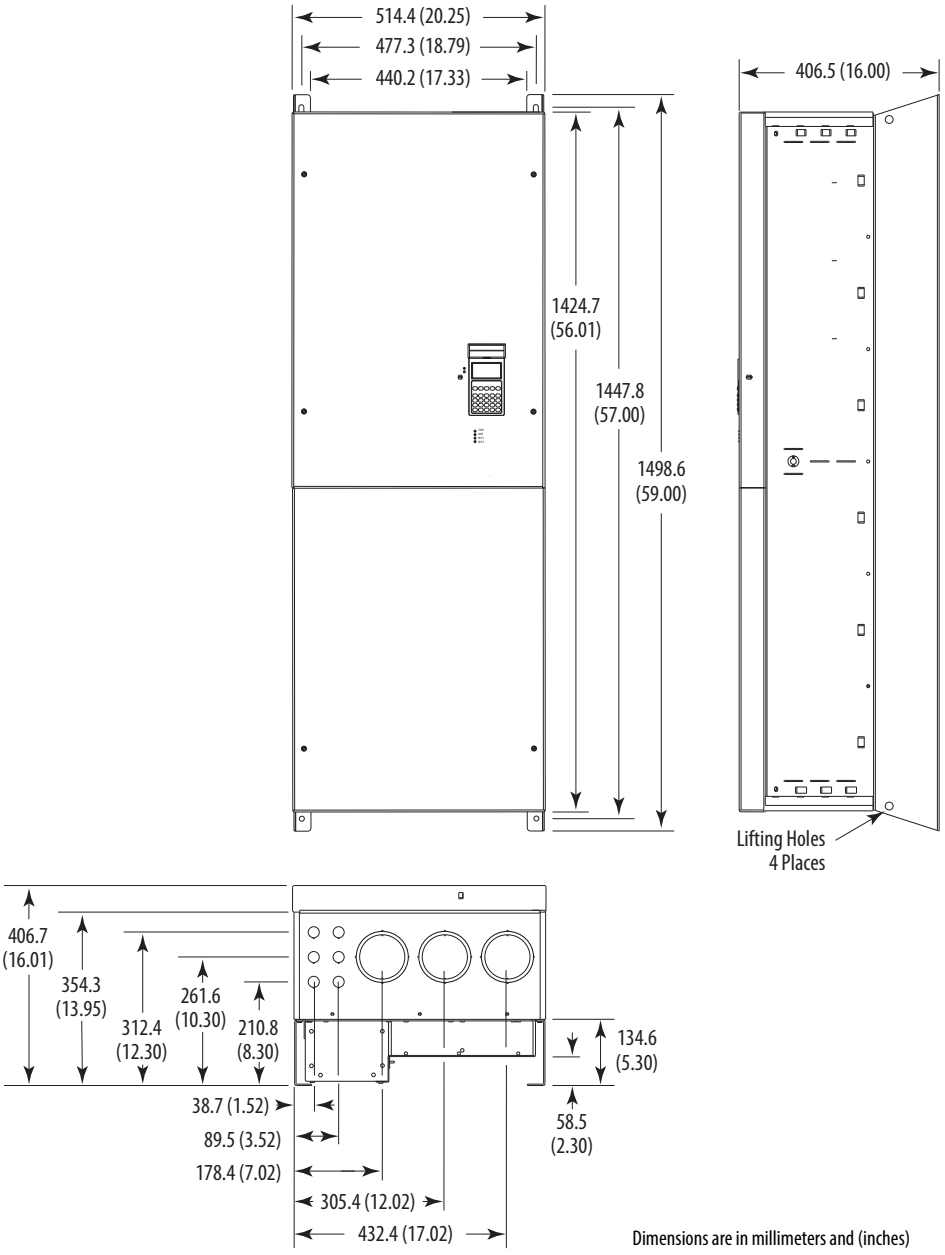

Dimensions are in millimeters and (inches)

Approx. Weight kg (lbs.)	
Drive	**Drive & Packaging**
170 (375)	196 (433)

Frame 7 – IP00, NEMA / UL Type Open

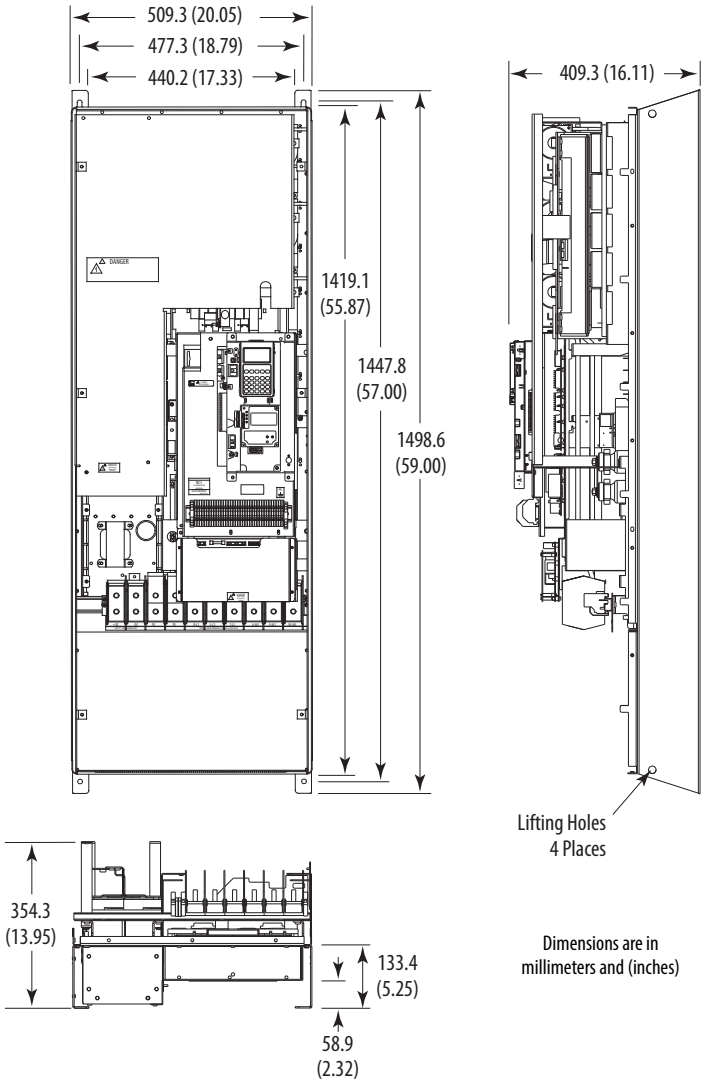

Approx. Weight kg (lbs.)	
Drive	**Drive & Packaging**
147 (324)	173 (382)

Frame 7 – Flange Mount Cutout

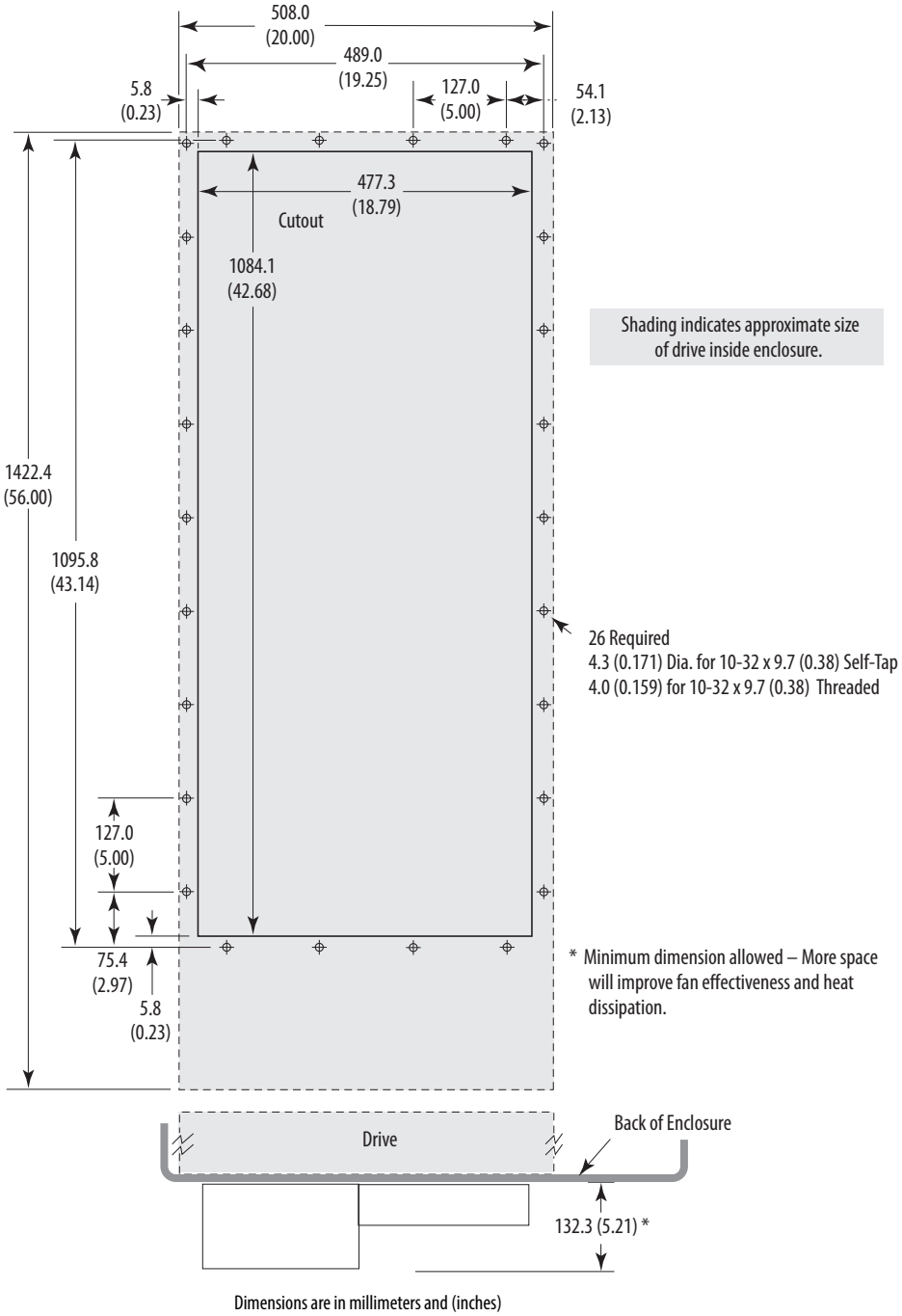

IMPORTANT Use gasket kit catalog number SK-G1-GASKET1-F7 with user supplied IP54, NEMA / UL Type 12 enclosure.

Frames 8…9 – IP20, NEMA / UL Type 1

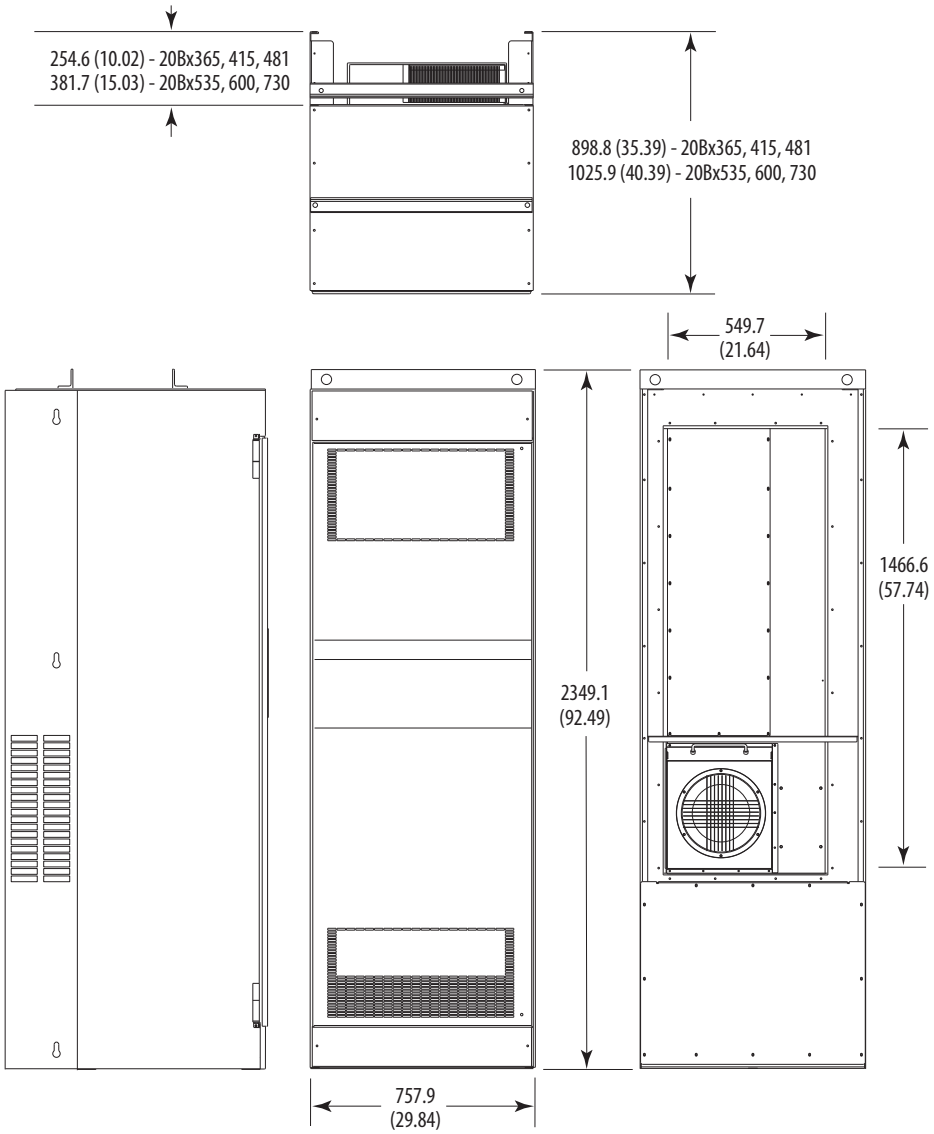

Dimensions are in millimeters and (inches)

Approx. Weight kg (lbs.)		
Frame	**Drive**	**Drive & Packaging**
8	509 (1122)	556 (1225)
9	526 (1159)	603 (1262)

Frames 8…9 – IP00, NEMA / UL Type Open

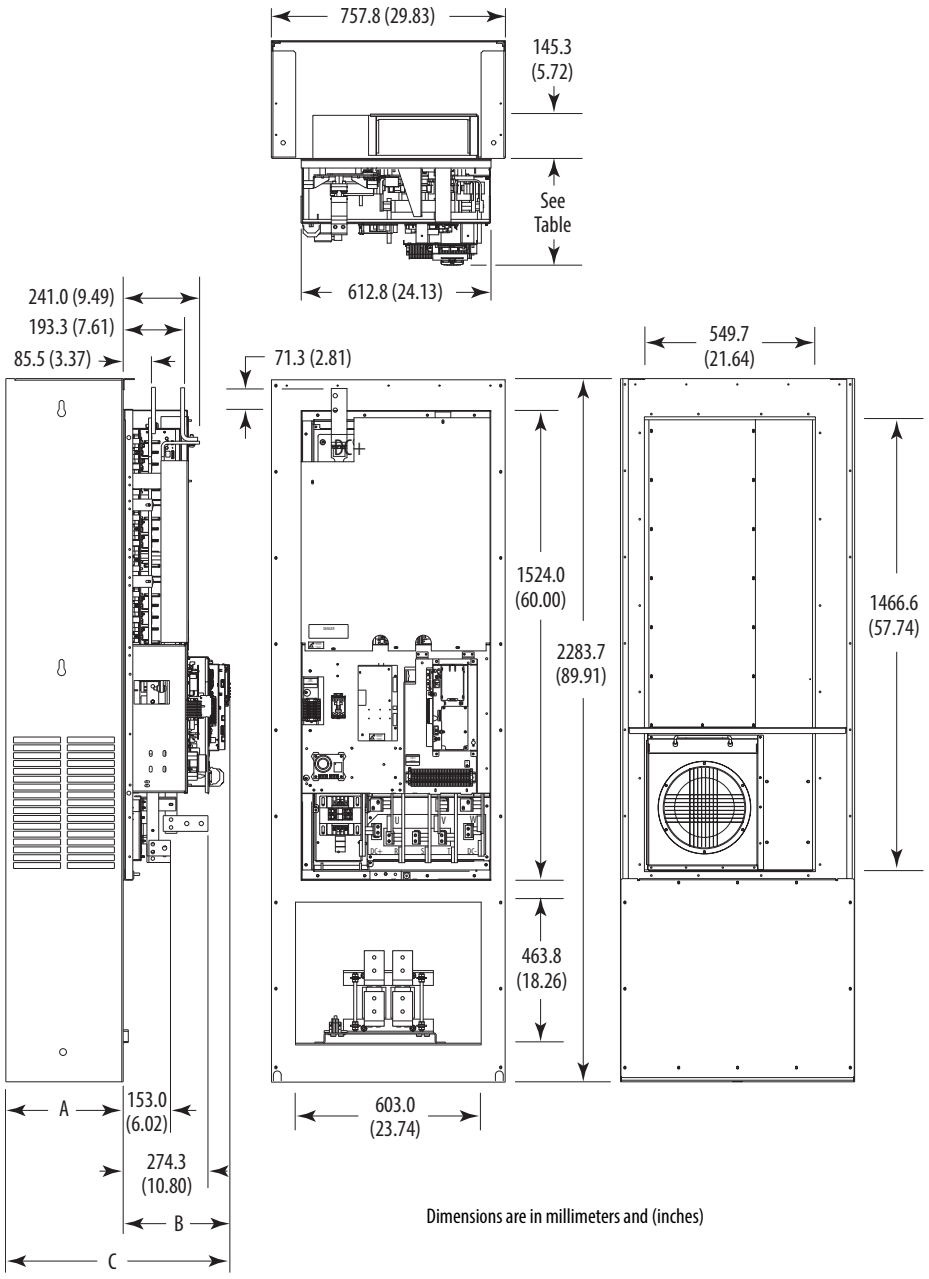

Dimensions are in millimeters and (inches)

Frame	Cat. No.	A	B	C	Approx. Weight kg (lbs.)	
					Drive	Drive & Packaging
8	20Bx365, 415, 481	254.6 (10.02)	345.3 (13.59)	599.4 (23.60)	384 (847)	431 (950)
	20Bx535, 600	381.7 (15.03)	345.5 (13.60)	726.6 (28.61)	384 (847)	431 (950)
9	20Bx730	381.1 (15.00)	345.3 (13.60)	771.9 (30.39)	401 (884)	448 (987)

Frames 8…9 – Converting an IP00 Drive for Flange Mounting

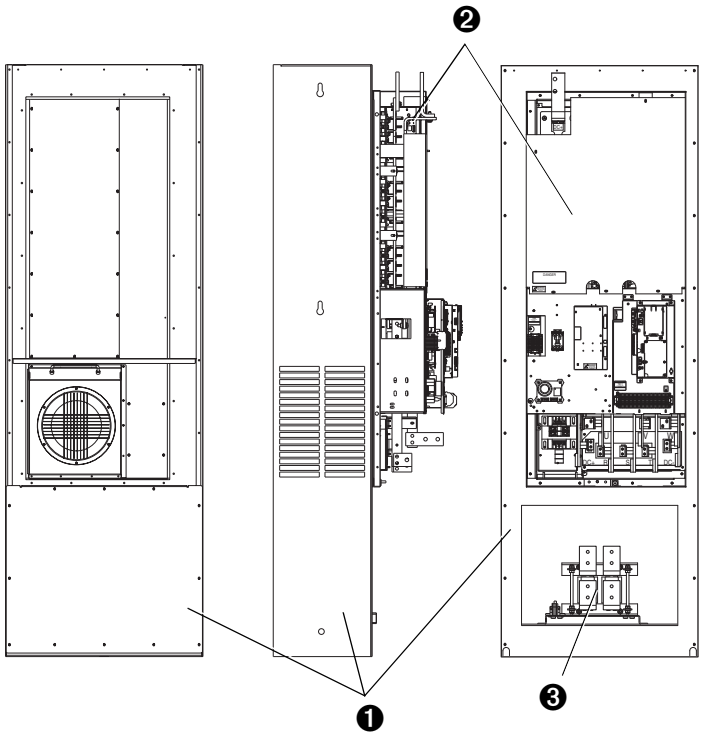

No.	Component
❶	Remove these IP00 enclosure components.
❷	Drive assembly to be flange mounted.
❸	DC link choke - mounts separately in enclosure (see page 72 for dimensions) and is wired directly to drive.

Frames 8…9 Roll-In – IP00, NEMA / UL Type Open

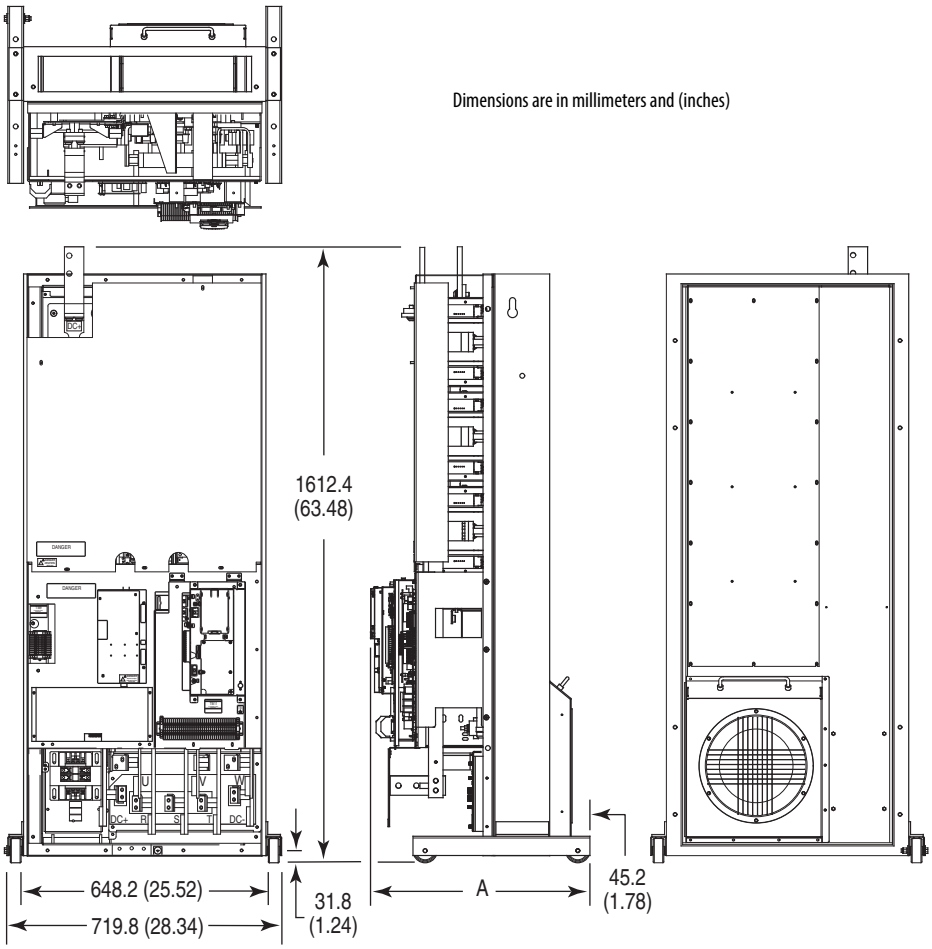

Frame	Cat. No.	A	Approx. Weight kg (lbs.)	
			Drive	Drive & Packaging
8	20Bx365, 415, 481	574.8 (22.63)	250 (552)	297 (655)
8	20Bx535, 600	574.8 (22.63)	250 (552)	297 (655)
9	20Bx730	594.3 (23.40)	267 (589)	314 (692)

Frames 8…9 Roll-In Mounting Considerations

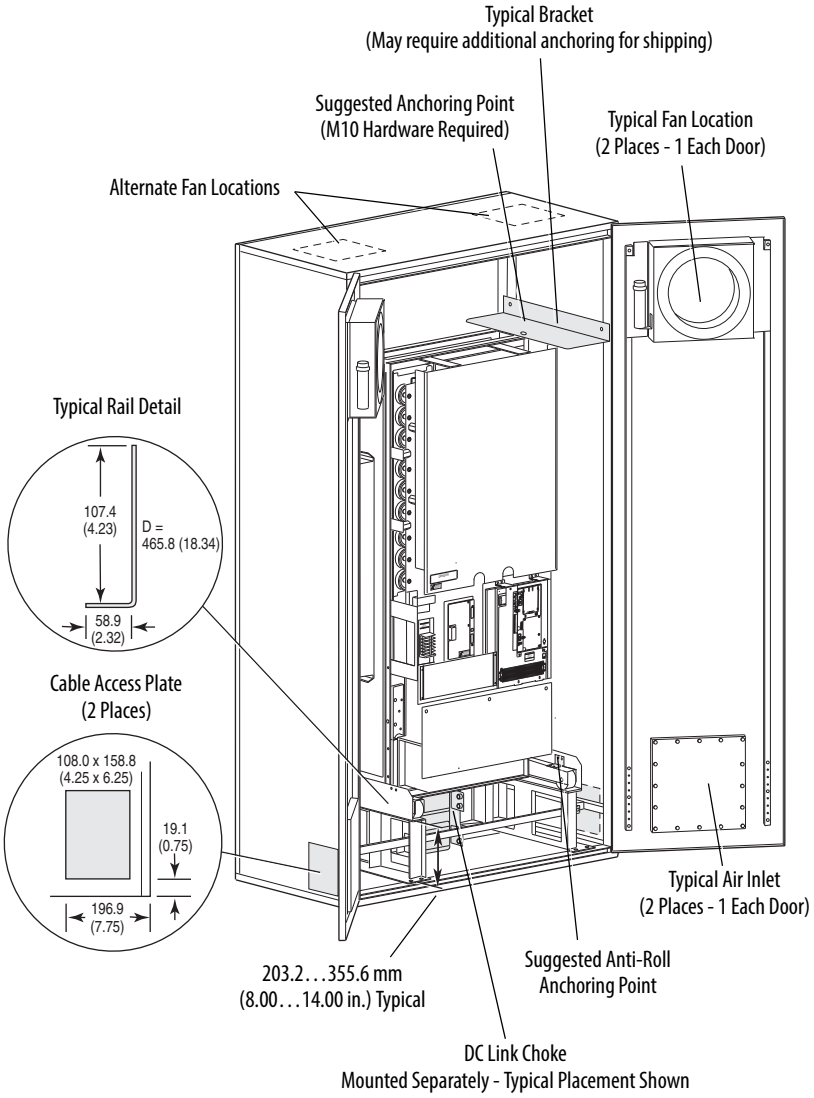

IMPORTANT This information illustrates how an open roll-in style drive could be mounted in a user supplied enclosure. Illustrations are intended only to identify structural mounting points and hardware shapes. You must design and fabricate steel components based on the actual mounting configuration, calculated loads and enclosure specifications. Minimum thickness of all parts = 4.6 mm (0.18 in.).

Frames 8…9 Flange Mount Cutout

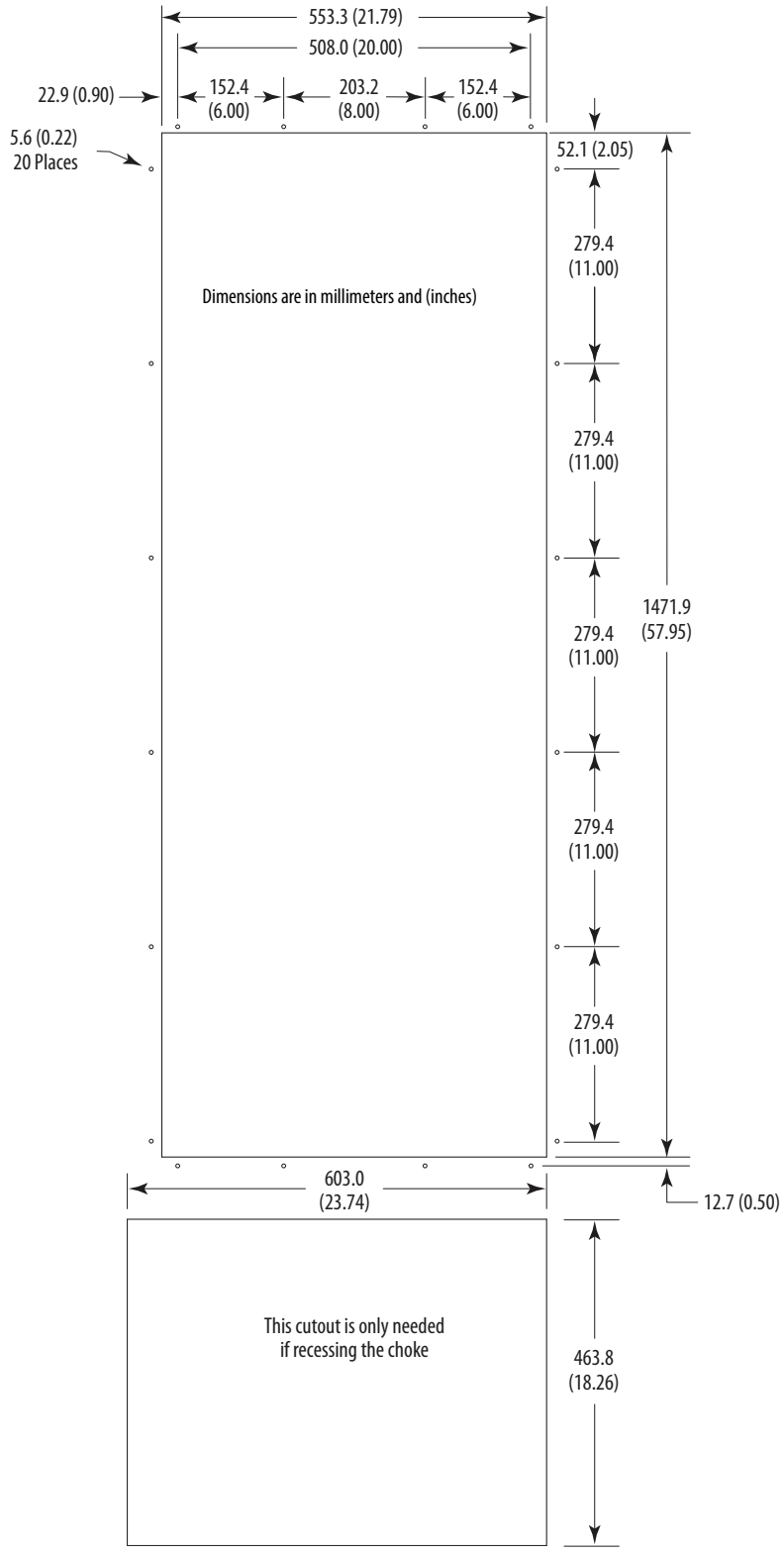

IMPORTANT Use gasket kit catalog number SK-G1-GASKET1-F89 with user supplied IP54, NEMA / UL Type 12 enclosure.

DC Link Chokes

Frame 8

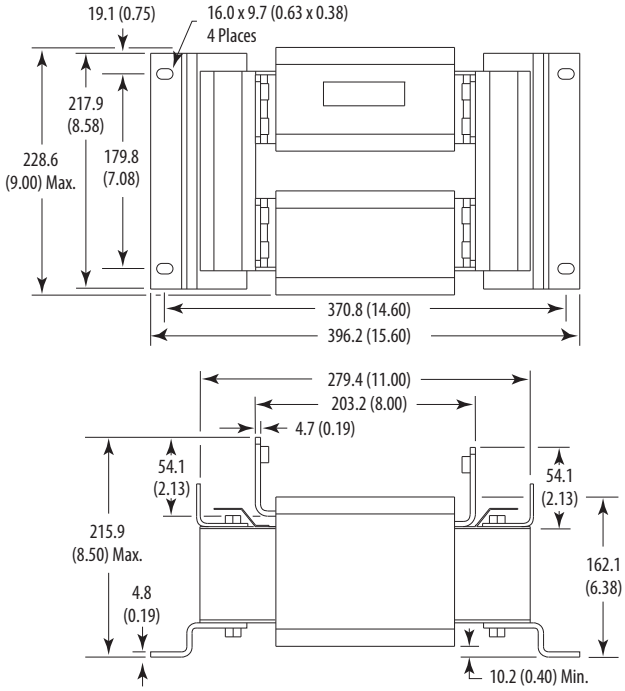

Frame 9

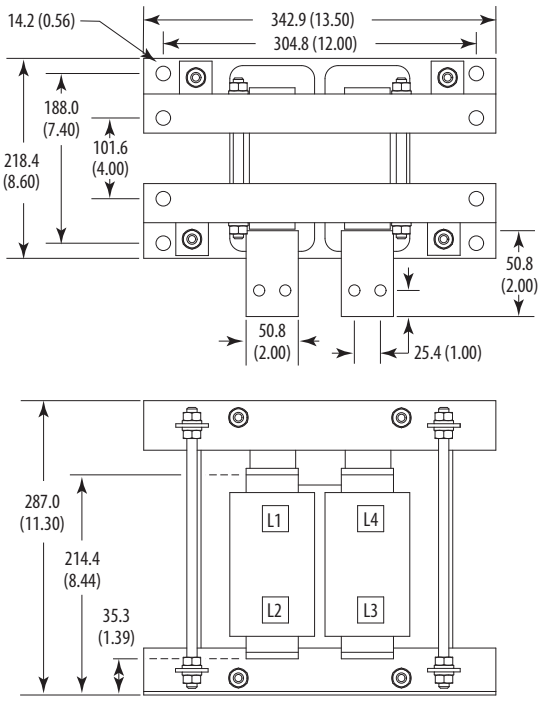

Frame 10

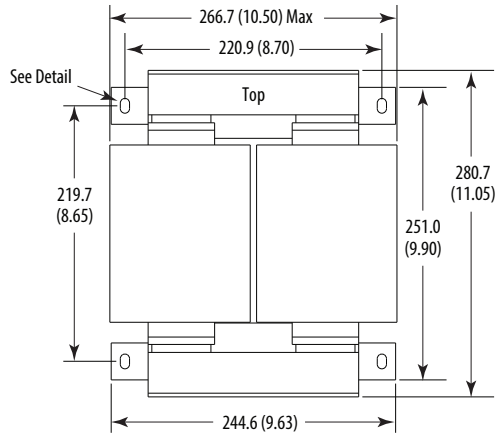

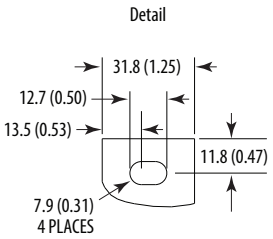

Dimensions are in millimeters and (inches)

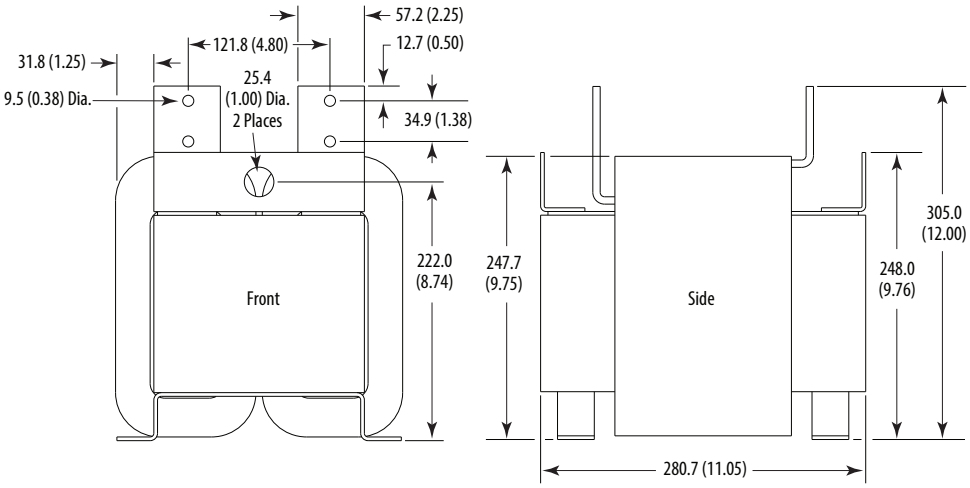

Frame 10 – IP20, NEMA / UL Type 1
AC Input Shown, for DC Input Dimensions use the Inverter (Left) Bay

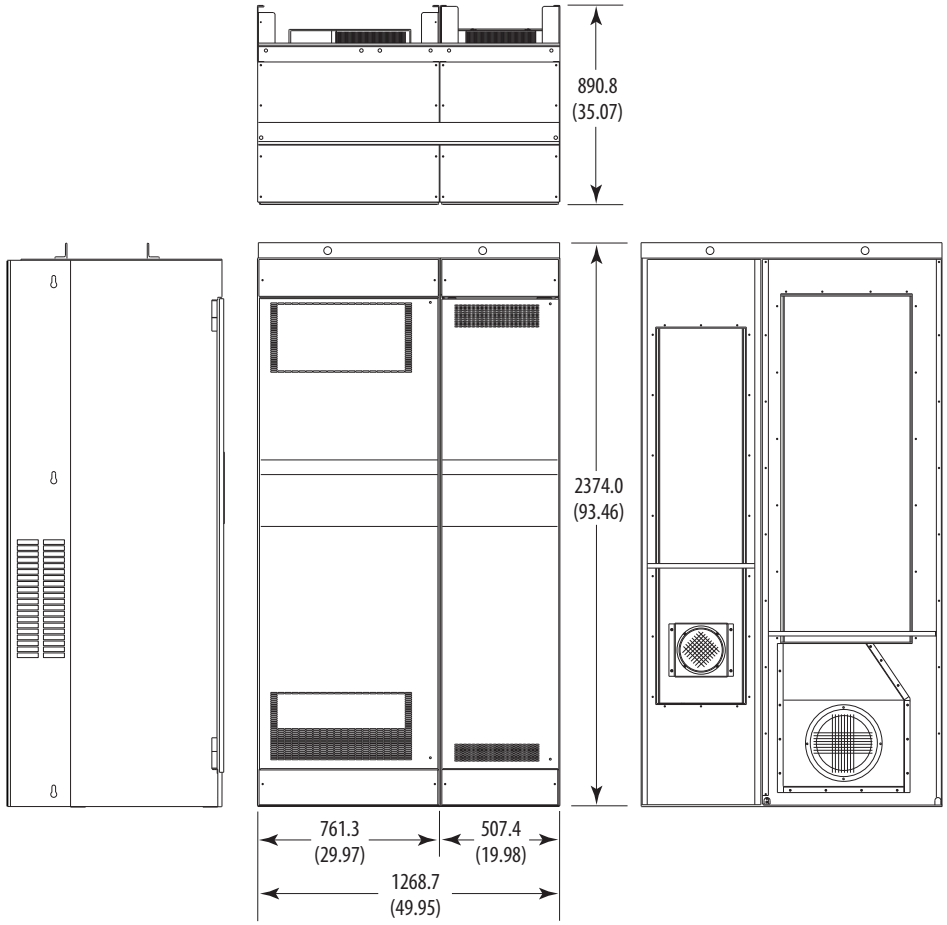

Dimensions are in millimeters and (inches)

Approx. Weight kg (lbs.)		
Type	**Drive**	**Drive & Packaging**
DC Input	468 (1032)	515 (1135)
AC Input	867 (1912)	958 (2112)

Frame 10 – IP00, NEMA / UL Type Open

AC Input Shown, for DC Input Dimensions use the Inverter (Left) Bay

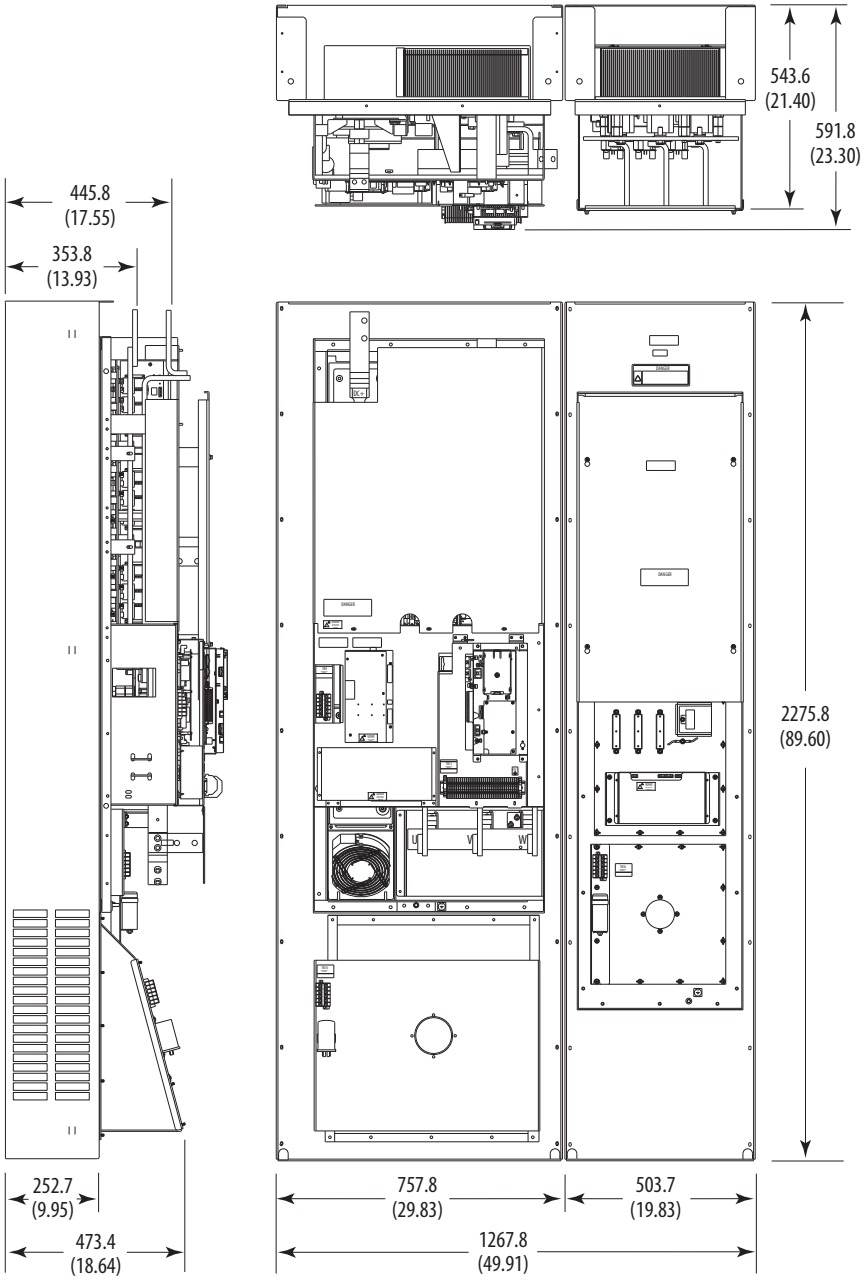

Dimensions are in millimeters and (inches)

Approx. Weight kg (lbs.)		
Type	**Drive**	**Drive & Packaging**
DC Input	305 (672)	352 (775)
AC Input	532 (1172)	623 (1372)

Frame 10 – Flange Mount Cutout

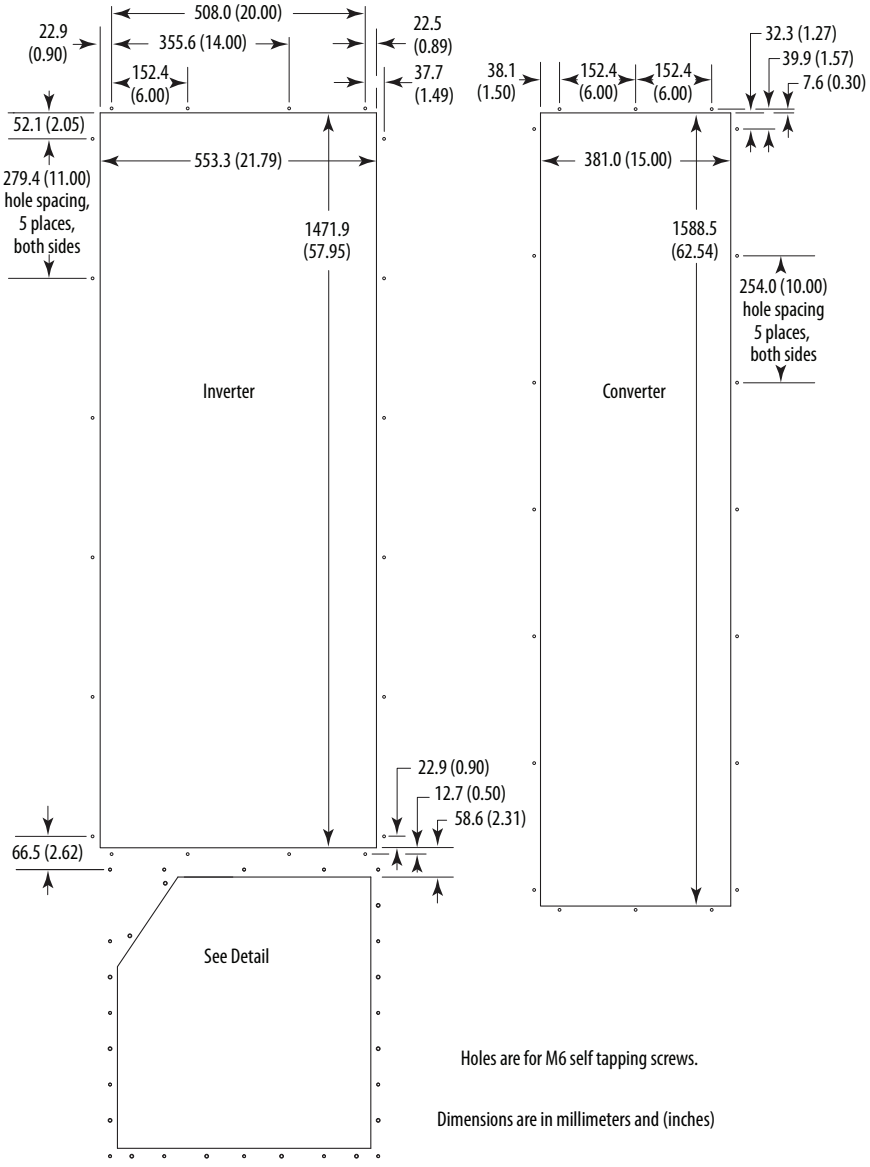

IMPORTANT Backplate and extension are a single piece. Drive chassis can be removed from backplate to mount in user supplied IP54, NEMA / UL Type 12 enclosure.

Frame 10 – Flange Mount Cutout Detail

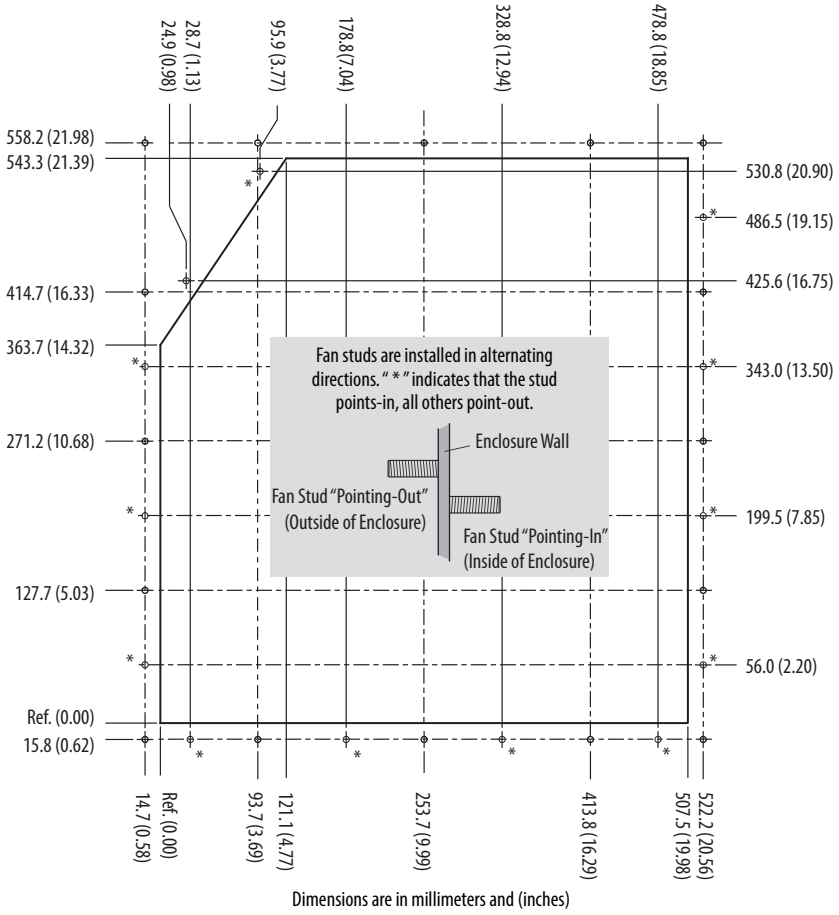

IMPORTANT Backplate and extension are a single piece. Drive chassis can be removed from backplate to mount in user supplied IP54, NEMA / UL Type 12 enclosure.

PowerFlex 700 Packaged Drives

Product Description

PowerFlex 700 Packaged Drives are ideal for global Original Equipment Manufacturers (OEM) and end users with special installation needs. This program simplifies installation and start-up by allowing users to order drive packages that combine operator interface, control, communications and power options in pre-configured assemblies. Designed to meet customer demands for space savings, application flexibility and reliability, Packaged PowerFlex 700 AC drives offer a number of commonly requested pre-engineered options, as well as more complex custom-engineered packages.

Benefits

- Simplified installation and start-up by use of common options assembled at the factory.
- Drive functionality exceeds options offered with a standard drive.
- Multiple packaging options specific to customer needs.
- Pre-engineered options for easy order entry, consistent manufacturing, high quality and reduced deliveries.
- Selectable configurations to meet application requirements.

Features

- Standard PowerFlex 700 AC drives and drive-related options.
- Six pulse and multi-pulse.
- Tuned harmonic filters.
- Enclosure options: Type 1, Type 12 (fan and filter or convection/AC), and Type 4 (indoor).
- Pre-engineered options.
- Custom/engineered solutions.
- UL panel recognition from the factory for pre-engineered options.

Options

- Drive Input Protection
- Input/Output Contactors
- Input/Output Line Reactors
- Bypass
- Control Power
- Control Interface and Feedback
- Communication
- Human Interface Module (HIM)
- Motor Interface
- Door Mounted Operator Devices

Please contact your local distributor or sales office for product availability.

Drive Options

Human Interface Modules

Description	Cat. No.
No HIM (Blank Plate), Handheld/Local (Drive Mount)	20-HIM-A0
LCD Display, Full Numeric Keypad, Handheld/Local (Drive Mount)	20-HIM-A3
Enhanced, LCD, Full Numeric Keypad, Handheld/Local (Drive Mount)	20-HIM-A6
Remote (Panel Mount) LCD Display, Full Numeric Keypad (1) (2)	20-HIM-C3S
Enhanced, LCD, Full Numeric Keypad ?‡	20-HIM-C6S

(1) IP66, NEMA Type 4X/12 - For indoor use only.

(2) Includes a 1202-C30 interface cable (3 meters) for connection to drive.

Human Interface Module Accessories

Description	Cat. No.
Bezel Kit for LCD HIMs, NEMA Type 1 (1)	20-HIM-B1
PowerFlex HIM Interface Cable, 1 m (39 in) (2)	20-HIM-H10
Comm Option Cable Kit (Male-Male) 0.33 Meters (1.1 Feet) 1 Meter (3.3 Feet) 3 Meter (9.8 Feet) 9 Meter (29.5 Feet)	 1202-C03 1202-C10 1202-C30 1202-C90
Cable Kit (Male-Female) (3) 0.33 Meters (1.1 Feet) 1 Meter (3.3 Feet) 3 Meter (9.8 Feet) 9 Meter (29.5 Feet)	 1202-H03 1202-H10 1202-H30 1202-H90
DPI Cable Kit with Connectors, Tools and 100 m (328 ft.) Cable	1202-CBL-KIT-100M
DPI Cable Connector Kit	1202-TB-KIT-SET
DPI/SCANport™ One toTwo Port Splitter Cable	1203-S03

(1) Includes a 1202-C30 interface cable (3 meters) for connection to drive.

(2) Required only when HIM is used as handheld or remote.

(3) Required in addition to 20-HIM-H10 for distances up to a total maximum of 10 Meters (32.8 Feet).

Communication Option Kits and Accessories

Description	Cat. No.
BACnet® MS/TP RS485 Communication Adapter	20-COMM-B
ControlNet Communication Adapter (Coax)	20-COMM-C
DeviceNet Communication Adapter	20-COMM-D
EtherNet/IP™ Communication Adapter	20-COMM-E
Dual-port EtherNet/IP™ Communication Adapter	20-COMM-ER (2)
HVAC Communication Adapter (Only Modbus RTU can be used)	20-COMM-H
CANopen® Communication Adapter	20-COMM-K
LonWorks® Communication Adapter	20-COMM-L
Modbus/TCP Communication Adapter	20-COMM-M
PROFIBUS™ DP Communication Adapter	20-COMM-P
ControlNet Communication Adapter (Fiber)	20-COMM-Q
Remote I/O Communication Adapter	20-COMM-R (3)
RS485 DF1 Communication Adapter	20-COMM-S
External Communications Kit Power Supply	20-XCOMM-AC-PS1
DPI External Communications Kit	20-XCOMM-DC-BASE
External DPI I/O Option Board (1)	20-XCOMM-IO-OPT1
Compact I/O™ Module (3 Channel)	1769-SM1
Serial Null Modem Adapter	1203-SNM
Smart Self-powered Serial Converter (RS232) includes 1203-SFC and 1202-C10 Cables	1203-SSS
Universal Serial Bus™ (USB) Converter includes 2 m USB, 20-HIM-H10 & 22-HIM-H10 Cables	1203-USB

(1) For use only with DPI External Communications Kits 20-XCOMM-DC-BASE.

(2) Contact your local Rockwell Automation sales office or Allen-Bradley distributor for availability.

(3) This item has Silver Series status. For information, refer to http://www.ab.com/silver.

Feedback Options

Description	Cat. No.
12V/5V Encoder (1)	20B-ENC-1

(1) Vector Control only.

Other Options

Description	Cat. No.
Removable I/O Terminal Block	SK-G9-TB1-S1
Removable Encoder Terminal Block	SK-G9-TB1-ENC1

PowerFlex 700 Control Option Kits

Control with I/O	Factory Installed Cat. Code # (2)	Cat. No.
Vector Control - 24V DC with: (1)		
60 Hz Maximum	NNAD	20B-VECT-C0AD
82 Hz Maximum	NNAX	20B-VECTB-C0AX
Cascading Fan/Pump Control	NNAE	20B-VECT-C0AE
Pump Off (for Pump Jack)	NNBA	20B-VECTB-C0BA
Vector Control - 115V AC(1)	D (3)	20B-VECTB-D0
Vector Control - 115V AC with:(1)		
60 Hz Maximum	NNAD	20B-VECT-D0AD
82 Hz Maximum	NNAX	20B-VECTB-D0AX
Cascading Fan/Pump Control	NNAE	20B-VECT-D0AE
Pump Off (for Pump Jack)	NNBA	20B-VECT-D0BA

(1) Vector Control option utilizes DPI Only.

(2) This code is entered at the end of the drive catalog number (positions 17…20).

(3) This code is entered at position 15 of the drive catalog number.

Internal Dynamic Brake Resistor Kits

These resistors have a limited duty cycle. Refer to the PowerFlex Dynamic Braking Selection Guide to determine if an internal resistor will be sufficient for your application. An external resistor may be required.

Drive Input Voltage	Brake Resistance Ohms	Frame	Cat. No.
208…240V AC	62	0	20BB-DB1-0
	62	1 (except 7.5 Hp)	20BB-DB1-1
	22	1 (7.5 Hp)	20BB-DB2-1
	22	2	20BB-DB1-2
380…600V AC	115	0	20BD-DB1-0
	115	1	20BD-DB1-1
	68	2	20BD-DB1-2

Terminators

Description (1)	Cat. No.
for use with 3.7 kW (5 Hp) & below drives	1204-TFA1
for use with 1.5 kW (2 Hp) & up drives	1204-TFB2

(1) Refer to Appendix A of the Wiring and Grounding Guidelines for Pulse Width Modulated (PWM) AC Drives, publication Drives-IN001 for selection information.

Reflected Wave Reduction Modules w/Common Mode Choke

Description (1)	Cat. No.
17A with Common Mode Choke	1204-RWC-17-A

(1) Refer to Appendix A of the Wiring and Grounding Guidelines for Pulse Width Modulated (PWM) AC Drives, publication Drives-IN001 for selection information.

Isolation Transformers

For installations that have specific types of AC supply configurations or require drive protection due to AC line disturbances, isolation transformers are available.

IP32 (NEMA/UL Type 3R)

Motor Rating kW (Hp)	240V, 60 Hz, Three-Phase, 240V Primary & 240V Secondary	460V, 60 Hz, Three-Phase, 460V Primary & 460V Secondary	575V, 60 Hz, Three-Phase, 575V Primary & 575V Secondary
	Cat. No.	Cat. No.	Cat. No.
0.25 (0.33)	1321-3TW005-AA	1321-3TW005-BB	–
0.37 (0.5)	1321-3TW005-AA	1321-3TW005-BB	–
0.55 (0.75)	1321-3TW005-AA	1321-3TW005-BB	–
0.75 (1.0)	1321-3TW005-AA	1321-3TW005-BB	1321-3TW005-CC
1.1 (1.5)	1321-3TW005-AA	1321-3TW005-BB	–
1.5 (2.0)	1321-3TW005-AA	1321-3TW005-BB	1321-3TW005-CC
2.2 (3.0)	1321-3TW005-AA	1321-3TW005-BB	1321-3TW005-CC
4.0 (5.0)	1321-3TW007-AA	1321-3TW007-BB	1321-3TW007-CC
5.5 (7.5)	1321-3TW011-AA	1321-3TW011-BB	1321-3TW011-CC
7.5 (10)	1321-3TW014-AA	1321-3TW014-BB	1321-3TW014-CC
11 (15)	1321-3TW020-AA	1321-3TW020-BB	1321-3TW020-CC
15 (20)	1321-3TW027-AA	1321-3TW027-BB	1321-3TW027-CC
18.5 (25)	1321-3TW034-AA	1321-3TW034-BB	1321-3TW034-CC
22 (30)	1321-3TW040-AA	1321-3TW040-BB	1321-3TW040-CC
30 (40)	1321-3TW051-AA	1321-3TW051-BB	1321-3TW051-CC
37 (50)	1321-3TH063-AA	1321-3TH063-BB	1321-3TH063-CC
45 (60)	1321-3TH075-AA	1321-3TH075-BB	1321-3TH075-CC
55 (75)	1321-3TH093-AA	1321-3TH093-BB	1321-3TH093-CC
75 (100)	–	1321-3TH118-BB	1321-3TH118-CC
90 (125)	–	1321-3TH145-BB	1321-3TH145-CC
110 (150)	–	1321-3TH175-BB	1321-3TH175-CC
149 (200)	–	1321-3TH220-BB	1321-3TH220-CC
187 (250)	–	1321-3TH275-BB	1321-3TH275-CC
224 (300)	–	1321-3TH330-BB	1321-3TH330-CC
261 (350)	–	1321-3TH440-BB	1321-3TH440-CC
298 (400)	–	1321-3TH440-BB	1321-3TH440-CC
336 (450)	–	1321-3TH550-BB	1321-3TH550-CC
373 (500)	–	1321-3TH550-BB	1321-3TH550-CC
448 (600)	–	1321-3TH660-BB	1321-3TH660-CC
485 (650)	–	–	1321-3TH770-CC
522 (700)	–	1321-3TH770-BB	1321-3TH770-CC

Input/Output Line Reactors

For impedance matching, protection from AC line disturbances or motor protection, reactors are available for both the input and output sides of the drive.

240V, 60 Hz, Three-Phase, 3% Impedance

			Input Line Reactor[1]		Output Line Reactor[1]	
			IP00 (Open Style)	IP11 (NEMA/UL Type 1)	IP00 (Open Style)	IP11 (NEMA/UL Type 1)
Drive Cat. No.	Duty	Hp	Cat. No.	Cat. No.	Cat. No.	Cat. No.
20BB2P2	Heavy Duty	0.33	1321-3R2-D	1321-3RA2-D	1321-3R2-D	1321-3RA2-D
20BB2P2	Normal Duty	0.5	1321-3R2-D	1321-3RA2-D	1321-3R2-D	1321-3RA2-D
20BB4P2	Heavy Duty	0.75	1321-3R4-A	1321-3RA4-A	1321-3R4-A	1321-3RA4-A
20BB4P2	Normal Duty	1	1321-3R4-A	1321-3RA4-A	1321-3R4-A	1321-3RA4-A
20BB6P8	Heavy Duty	1.5	1321-3R8-B	1321-3RA8-B	1321-3R8-A	1321-3RA8-A
20BB6P8	Normal Duty	2	1321-3R8-A	1321-3RA8-A	1321-3R8-A	1321-3RA8-A
20BB9P6	Heavy Duty	2	1321-3R8-A	1321-3RA8-A	1321-3R12-A	1321-3RA12-A
20BB9P6	Normal Duty	3	1321-3R12-A	1321-3RA12-A	1321-3R12-A	1321-3RA12-A
20BB015	Heavy Duty	3	1321-3R12-A	1321-3RA12-A	1321-3R18-A	1321-3RA18-A
20BB015	Normal Duty	5	1321-3R18-A	1321-3RA18-A	1321-3R18-A	1321-3RA18-A
20BB022	Heavy Duty	5	1321-3R18-A	1321-3RA18-A	1321-3R25-A	1321-3RA25-A
20BB022	Normal Duty	7.5	1321-3R25-A	1321-3RA25-A	1321-3R25-A	1321-3RA25-A
20BB028	Heavy Duty	7.5	1321-3R25-A	1321-3RA25-A	1321-3R35-A	1321-3RA35-A
20BB028	Normal Duty	10	1321-3R35-A	1321-3RA35-A	1321-3R35-A	1321-3RA35-A
20BB042	Heavy Duty	10	1321-3R35-A	1321-3RA35-A	1321-3R45-A	1321-3RA45-A
20BB042	Normal Duty	15	1321-3R45-A	1321-3RA45-A	1321-3R45-A	1321-3RA45-A
20BB052	Heavy Duty	15	1321-3R45-A	1321-3RA45-A	1321-3R55-A	1321-3RA55-A
20BB052	Normal Duty	20	1321-3R55-A	1321-3RA55-A	1321-3R55-A	1321-3RA55-A
20BB070	Heavy Duty	20	1321-3R55-A	1321-3RA55-A	1321-3R80-A	1321-3RA80-A
20BB070	Normal Duty	25	1321-3R80-A	1321-3RA80-A	1321-3R80-A	1321-3RA80-A
20BB080	Heavy Duty	25	1321-3R80-A	1321-3RA80-A	1321-3R80-A	1321-3RA80-A
20BB080	Normal Duty	30	1321-3R80-A	1321-3RA80-A	1321-3R80-A	1321-3RA80-A
20BB104	Heavy Duty	30	1321-3R80-A	1321-3RA80-A	1321-3R80-A	1321-3RA80-A
20BB104	Normal Duty	40	1321-3R100-A	1321-3RA100-A	1321-3R100-A	1321-3RA100-A
20BB130	Heavy Duty	40	1321-3R100-A	1321-3RA100-A	1321-3R100-A	1321-3RA100-A
20BB130	Normal Duty	50	1321-3R130-A	1321-3RA130-A	1321-3R130-A	1321-3RA130-A
20BB154	Heavy Duty	50	1321-3R130-A	1321-3RA130-A	1321-3R130-A	1321-3RA130-A
20BB154	Normal Duty	60	1321-3R160-A	1321-3RA160-A	1321-3R160-A	1321-3RA160-A
20BB192	Heavy Duty	60	1321-3R160-A	1321-3RA160-A	1321-3R160-A	1321-3RA160-A
20BB192	Normal Duty	75	1321-3R200-A	1321-3RA200-A	1321-3R200-A	1321-3RA200-A
20BB260	Heavy Duty	75	1321-3R200-A	1321-3RA200-A	1321-3R200-A	1321-3RA200-A
20BB260	Normal Duty	100	1321-3RB250-A	1321-3RAB250-A	1321-3RB250-A	1321-3RAB250-A

(1) Input line reactors were sized based on the NEC fundamental motor amps. Output line reactors were sized based on the VFD rated output currents.

240V, 60 Hz, Three-Phase, 5% Impedance

			Input Line Reactor[1]		Output Line Reactor[1]	
			IP00 (Open Style)	IP11 (NEMA/UL Type 1)	IP00 (Open Style)	IP11 (NEMA/UL Type 1)
Drive Cat. No.	Duty	Hp	Cat. No.	Cat. No.	Cat. No.	Cat. No.
20BB2P2	Heavy Duty	0.33	1321-3R2-A	1321-3RA2-A	1321-3R2-A	1321-3RA2-A
20BB2P2	Normal Duty	0.5	1321-3R2-A	1321-3RA2-A	1321-3R2-A	1321-3RA2-A
20BB4P2	Heavy Duty	0.75	1321-3R4-B	1321-3RA4-B	1321-3R4-B	1321-3RA4-B
20BB4P2	Normal Duty	1	1321-3R4-B	1321-3RA4-B	1321-3R4-B	1321-3RA4-B
20BB6P8	Heavy Duty	1.5	1321-3R8-B	1321-3RA8-B	1321-3R8-B	1321-3RA8-B
20BB6P8	Normal Duty	2	1321-3R8-B	1321-3RA8-B	1321-3R8-B	1321-3RA8-B
20BB9P6	Heavy Duty	2	1321-3R8-B	1321-3RA8-B	1321-3R12-B	1321-3RA12-B
20BB9P6	Normal Duty	3	1321-3R12-B	1321-3RA12-B	1321-3R12-B	1321-3RA12-B
20BB015	Heavy Duty	3	1321-3R12-B	1321-3RA12-B	1321-3R18-B	1321-3RA18-B
20BB015	Normal Duty	5	1321-3R18-B	1321-3RA18-B	1321-3R18-B	1321-3RA18-B
20BB022	Heavy Duty	5	1321-3R18-B	1321-3RA18-B	1321-3R25-B	1321-3RA25-B
20BB022	Normal Duty	7.5	1321-3R25-B	1321-3RA25-B	1321-3R25-B	1321-3RA25-B
20BB028	Heavy Duty	7.5	1321-3R25-B	1321-3RA25-B	1321-3R35-B	1321-3RA35-B
20BB028	Normal Duty	10	1321-3R35-B	1321-3RA35-B	1321-3R35-B	1321-3RA35-B
20BB042	Heavy Duty	10	1321-3R35-B	1321-3RA35-B	1321-3R45-B	1321-3RA45-B
20BB042	Normal Duty	15	1321-3R45-B	1321-3RA45-B	1321-3R45-B	1321-3RA45-B
20BB052	Heavy Duty	15	1321-3R45-B	1321-3RA45-B	1321-3R55-B	1321-3RA55-B
20BB052	Normal Duty	20	1321-3R55-B	1321-3RA55-B	1321-3R55-B	1321-3RA55-B
20BB070	Heavy Duty	20	1321-3R55-B	1321-3RA55-B	1321-3R80-B	1321-3RA80-B
20BB070	Normal Duty	25	1321-3R80-B	1321-3RA80-B	1321-3R80-B	1321-3RA80-B
20BB080	Heavy Duty	25	1321-3R80-B	1321-3RA80-B	1321-3R80-B	1321-3RA80-B
20BB080	Normal Duty	30	1321-3R80-B	1321-3RA80-B	1321-3R80-B	1321-3RA80-B
20BB104	Heavy Duty	30	1321-3R80-B	1321-3RA80-B	1321-3R80-B	1321-3RA80-B
20BB104	Normal Duty	40	1321-3R100-B	1321-3RA100-B	1321-3R100-B	1321-3RA100-B
20BB130	Heavy Duty	40	1321-3R100-B	1321-3RA100-B	1321-3R100-B	1321-3RA100-B
20BB130	Normal Duty	50	1321-3R130-B	1321-3RA130-B	1321-3R130-B	1321-3RA130-B
20BB154	Heavy Duty	50	1321-3R130-B	1321-3RA130-B	1321-3R130-B	1321-3RA130-B
20BB154	Normal Duty	60	1321-3R160-B	1321-3RA160-B	1321-3R160-B	1321-3RA160-B
20BB192	Heavy Duty	60	1321-3R160-B	1321-3RA160-B	1321-3R160-B	1321-3RA160-B
20BB192	Normal Duty	75	1321-3R200-B	1321-3RA200-B	1321-3R200-B	1321-3RA200-B
20BB260	Heavy Duty	75	1321-3R200-B	1321-3RA200-B	1321-3R200-B	1321-3RA200-B
20BB260	Normal Duty	100	1321-3RB250-B	1321-3RAB250-B	1321-3RB250-B	1321-3RAB250-B

(1) Input line reactors were sized based on the NEC fundamental motor amps. Output line reactors were sized based on the VFD rated output currents.

480V, 60 Hz, Three-Phase, 3% Impedance

			Input Line Reactor[1]		Output Line Reactor[1]	
			IP00 (Open Style)	IP11 (NEMA/UL Type 1)	IP00 (Open Style)	IP11 (NEMA/UL Type 1)
Drive Cat. No.	Duty	Hp	Cat. No.	Cat. No.	Cat. No.	Cat. No.
20BD1P1	Heavy Duty	0.33	1321-3R1-C	1321-3RA1-C	1321-3R2-B	1321-3RA2-B
20BD1P1	Normal Duty	0.5	1321-3R1-C	1321-3RA1-C	1321-3R2-B	1321-3RA2-B
20BD2P1	Heavy Duty	0.75	1321-3R2-A	1321-3RA2-A	1321-3R2-A	1321-3RA2-A
20BD2P1	Normal Duty	1	1321-3R2-A	1321-3RA2-A	1321-3R2-A	1321-3RA2-A
20BD3P4	Heavy Duty	1.5	1321-3R4-C	1321-3RA4-C	1321-3R4-B	1321-3RA4-B
20BD3P4	Normal Duty	2	1321-3R4-B	1321-3RA4-B	1321-3R4-B	1321-3RA4-B
20BD5P0	Heavy Duty	2	1321-3R4-B	1321-3RA4-B	1321-3R8-C	1321-3RA8-C
20BD5P0	Normal Duty	3	1321-3R8-C	1321-3RA8-C	1321-3R8-C	1321-3RA8-C
20BD8P0	Heavy Duty	3	1321-3R8-C	1321-3RA8-C	1321-3R8-B	1321-3RA8-B
20BD8P0	Normal Duty	5	1321-3R8-B	1321-3RA8-B	1321-3R8-B	1321-3RA8-B
20BD011	Heavy Duty	5	1321-3R8-B	1321-3RA8-B	1321-3R12-B	1321-3RA12-B
20BD011	Normal Duty	7.5	1321-3R12-B	1321-3RA12-B	1321-3R12-B	1321-3RA12-B
20BD014	Heavy Duty	7.5	1321-3R12-B	1321-3RA12-B	1321-3R18-B	1321-3RA18-B
20BD014	Normal Duty	10	1321-3R18-B	1321-3RA18-B	1321-3R18-B	1321-3RA18-B
20BD022	Heavy Duty	10	1321-3R18-B	1321-3RA18-B	1321-3R25-B	1321-3RA25-B
20BD022	Normal Duty	15	1321-3R25-B	1321-3RA25-B	1321-3R25-B	1321-3RA25-B
20BD027	Heavy Duty	15	1321-3R25-B	1321-3RA25-B	1321-3R25-B	1321-3RA25-B
20BD027	Normal Duty	20	1321-3R35-B	1321-3RA35-B	1321-3R25-B	1321-3RA25-B
20BD034	Heavy Duty	20	1321-3R35-B	1321-3RA35-B	1321-3R35-B	1321-3RA35-B
20BD034	Normal Duty	25	1321-3R35-B	1321-3RA35-B	1321-3R35-B	1321-3RA35-B
20BD040	Heavy Duty	25	1321-3R35-B	1321-3RA35-B	1321-3R45-B	1321-3RA45-B
20BD040	Normal Duty	30	1321-3R45-B	1321-3RA45-B	1321-3R45-B	1321-3RA45-B
20BD052	Heavy Duty	30	1321-3R45-B	1321-3RA45-B	1321-3R55-B	1321-3RA55-B
20BD052	Normal Duty	40	1321-3R55-B	1321-3RA55-B	1321-3R55-B	1321-3RA55-B
20BD065	Heavy Duty	40	1321-3R55-B	1321-3RA55-B	1321-3R80-B	1321-3RA80-B
20BD065	Normal Duty	50	1321-3R80-B	1321-3RA80-B	1321-3R80-B	1321-3RA80-B
20BD077	Heavy Duty	50	1321-3R80-B	1321-3RA80-B	1321-3R80-B	1321-3RA80-B
20BD077	Normal Duty	60	1321-3R80-B	1321-3RA80-B	1321-3R80-B	1321-3RA80-B
20BD096	Heavy Duty	60	1321-3R80-B	1321-3RA80-B	1321-3R80-B	1321-3RA80-B
20BD096	Normal Duty	75	1321-3R100-B	1321-3RA100-B	1321-3R100-B	1321-3RA100-B
20BD125	Heavy Duty	75	1321-3R100-B	1321-3RA100-B	1321-3R100-B	1321-3RA100-B
20BD125	Normal Duty	100	1321-3R130-B	1321-3RA130-B	1321-3R130-B	1321-3RA130-B
20BD156	Heavy Duty	100	1321-3R130-B	1321-3RA130-B	1321-3R130-B	1321-3RA130-B
20BD156	Normal Duty	125	1321-3R160-B	1321-3RA160-B	1321-3R160-B	1321-3RA160-B
20BD180	Heavy Duty	125	1321-3R160-B	1321-3RA160-B	1321-3R160-B	1321-3RA160-B
20BD180	Normal Duty	150	1321-3R200-B	1321-3RA200-B	1321-3R200-C	1321-3RA200-C

continued

			Input Line Reactor[1]		Output Line Reactor[1]	
			IP00 (Open Style)	IP11 (NEMA/UL Type 1)	IP00 (Open Style)	IP11 (NEMA/UL Type 1)
Drive Cat. No.	Duty	Hp	Cat. No.	Cat. No.	Cat. No.	Cat. No.
20BD248	Heavy Duty	150	1321-3R200-B	1321-3RA200-B	1321-3R200-C	1321-3RA200-C
20BD248	Normal Duty	200	1321-3RB250-B	1321-3RAB250-B	1321-3RB250-B	1321-3RAB250-B
20BD292	Heavy Duty	200	1321-3RB250-B	1321-3RAB250-B	1321-3RB250-B	1321-3RAB250-B
20BD292	Normal Duty	250	1321-3RB320-B	1321-3RAB320-B	1321-3RB320-B	1321-3RAB320-B
20BD325	Heavy Duty	250	1321-3RB320-B	1321-3RAB320-B	1321-3RB320-B	1321-3RAB320-B
20BD325	Normal Duty	250	1321-3RB320-B	1321-3RAB320-B	1321-3RB320-B	1321-3RAB320-B
20BD365	Heavy Duty	250	1321-3RB320-B	1321-3RAB320-B	1321-3RB320-B	1321-3RAB320-B
20BD365	Normal Duty	300	1321-3RB400-B	1321-3RAB400-B	1321-3RB400-B	1321-3RAB400-B
20BD415	Heavy Duty	300	1321-3RB400-B	1321-3RAB400-B	1321-3RB400-B	1321-3RAB400-B
20BD415	Normal Duty	350	1321-3RB400-B	1321-3RAB400-B	1321-3RB400-B	1321-3RAB400-B
20BD481	Heavy Duty	350	1321-3RB400-B	1321-3RAB400-B	1321-3RB400-B	1321-3RAB400-B
20BD481	Normal Duty	400	1321-3R500-B	1321-3RA500-B	1321-3R500-B	1321-3RA500-B
20BD535	Heavy Duty	400	1321-3R500-B	1321-3RA500-B	1321-3R500-B	1321-3RA500-B
20BD535	Normal Duty	450	1321-3R500-B	1321-3RA500-B	1321-3R500-B	1321-3RA500-B
20BD600	Heavy Duty	450	1321-3R500-B	1321-3RA500-B	1321-3R500-B	1321-3RA500-B
20BD600	Normal Duty	500	1321-3R600-B	1321-3RA600-B	1321-3R600-B	1321-3RA600-B
20BD730	Heavy Duty	500	1321-3R600-B	1321-3RA600-B	1321-3R600-B	1321-3RA600-B
20BD730	Normal Duty	600	1321-3R750-B	1321-3RA750-B	1321-3R750-B	1321-3RA750-B
20BD875	Heavy Duty	600	1321-3R750-B	1321-3RA750-B	1321-3R600-B	1321-3RA600-B
20BD875	Normal Duty	700	1321-3R850-B	1321-3RA850-B	1321-3R850-B	1321-3RA850-B

(1) Input line reactors were sized based on the NEC fundamental motor amps. Output line reactors were sized based on the VFD rated output currents.

480V, 60 Hz, Three-Phase, 5% Impedance

			Input Line Reactor[1]		Output Line Reactor[1]	
			IP00 (Open Style)	IP11 (NEMA/UL Type 1)	IP00 (Open Style)	IP11 (NEMA/UL Type 1)
Drive Cat. No.	Duty	Hp	Cat. No.	Cat. No.	Cat. No.	Cat. No.
20BD1P1	Heavy Duty	0.33	1321-3R1-B	1321-3RA1-B	1321-3R2-C	1321-3RA2-C
20BD1P1	Normal Duty	0.5	1321-3R1-B	1321-3RA1-B	1321-3R2-C	1321-3RA2-C
20BD2P1	Heavy Duty	0.75	1321-3R2-C	1321-3RA2-C	1321-3R2-B	1321-3RA2-B
20BD2P1	Normal Duty	1	1321-3R2-B	1321-3RA2-B	1321-3R2-B	1321-3RA2-B
20BD3P4	Heavy Duty	1.5	1321-3R4-D	1321-3RA4-D	1321-3R4-D	1321-3RA4-D
20BD3P4	Normal Duty	2	1321-3R4-D	1321-3RA4-D	1321-3R4-D	1321-3RA4-D
20BD5P0	Heavy Duty	2	1321-3R4-D	1321-3RA4-D	1321-3R8-D	1321-3RA8-D
20BD5P0	Normal Duty	3	1321-3R8-D	1321-3RA8-D	1321-3R8-D	1321-3RA8-D
20BD8P0	Heavy Duty	3	1321-3R8-D	1321-3RA8-D	1321-3R8-C	1321-3RA8-C
20BD8P0	Normal Duty	5	1321-3R8-C	1321-3RA8-C	1321-3R8-C	1321-3RA8-C
20BD011	Heavy Duty	5	1321-3R8-C	1321-3RA8-C	1321-3R12-C	1321-3RA12-C
20BD011	Normal Duty	7.5	1321-3R12-C	1321-3RA12-C	1321-3R12-C	1321-3RA12-C
20BD014	Heavy Duty	7.5	1321-3R12-C	1321-3RA12-C	1321-3R18-C	1321-3RA18-C
20BD014	Normal Duty	10	1321-3R18-C	1321-3RA18-C	1321-3R18-C	1321-3RA18-C
20BD022	Heavy Duty	10	1321-3R18-C	1321-3RA18-C	1321-3R25-C	1321-3RA25-C
20BD022	Normal Duty	15	1321-3R25-C	1321-3RA25-C	1321-3R25-C	1321-3RA25-C
20BD027	Heavy Duty	15	1321-3R25-C	1321-3RA25-C	1321-3R25-C	1321-3RA25-C
20BD027	Normal Duty	20	1321-3R35-C[2]	1321-3RA35-C[2]	1321-3R25-C	1321-3RA25-C
20BD034	Heavy Duty	20	1321-3R35-C[2]	1321-3RA35-C[2]	1321-3R35-C	1321-3RA35-C
20BD034	Normal Duty	25	1321-3R35-C	1321-3RA35-C	1321-3R35-C	1321-3RA35-C
20BD040	Heavy Duty	25	1321-3R35-C	1321-3RA35-C	1321-3R45-C	1321-3RA45-C
20BD040	Normal Duty	30	1321-3R45-C	1321-3RA45-C	1321-3R45-C	1321-3RA45-C
20BD052	Heavy Duty	30	1321-3R45-C	1321-3RA45-C	1321-3R55-C	1321-3RA55-C
20BD052	Normal Duty	40	1321-3R55-C	1321-3RA55-C	1321-3R55-C	1321-3RA55-C
20BD065	Heavy Duty	40	1321-3R55-C	1321-3RA55-C	1321-3R80-C	1321-3RA80-C
20BD065	Normal Duty	50	1321-3R80-C	1321-3RA80-C	1321-3R80-C	1321-3RA80-C
20BD077	Heavy Duty	50	1321-3R80-C	1321-3RA80-C	1321-3R80-C	1321-3RA80-C
20BD077	Normal Duty	60	1321-3R80-C	1321-3RA80-C	1321-3R80-C	1321-3RA80-C
20BD096	Heavy Duty	60	1321-3R80-C	1321-3RA80-C	1321-3R80-C	1321-3RA80-C
20BD096	Normal Duty	75	1321-3R100-C	1321-3RA100-C	1321-3R100-C	1321-3RA100-C
20BD125	Heavy Duty	75	1321-3R100-C	1321-3RA100-C	1321-3R100-C	1321-3RA100-C
20BD125	Normal Duty	100	1321-3R130-C	1321-3RA130-C	1321-3R130-C	1321-3RA130-C
20BD156	Heavy Duty	100	1321-3R130-C	1321-3RA130-C	1321-3R130-C	1321-3RA130-C
20BD156	Normal Duty	125	1321-3R160-C	1321-3RA160-C	1321-3R160-C	1321-3RA160-C
20BD180	Heavy Duty	125	1321-3R160-C	1321-3RA160-C	1321-3R160-C	1321-3RA160-C
20BD180	Normal Duty	150	1321-3R200-C	1321-3RA200-C	1321-3R200-C[2]	1321-3RA200-C[2]

continued

Drive Cat. No.	Duty	Hp	Input Line Reactor[1]		Output Line Reactor[1]	
			IP00 (Open Style)	IP11 (NEMA/UL Type 1)	IP00 (Open Style)	IP11 (NEMA/UL Type 1)
			Cat. No.	Cat. No.	Cat. No.	Cat. No.
20BD248	Heavy Duty	150	1321-3R200-C	1321-3RA200-C	1321-3R200-C[2]	1321-3RA200-C[2]
20BD248	Normal Duty	200	1321-3RB250-C	1321-3RAB250-C	1321-3RB250-C	1321-3RAB250-C
20BD292	Heavy Duty	200	1321-3RB250-C	1321-3RAB250-C	1321-3RB250-C	1321-3RAB250-C
20BD292	Normal Duty	250	1321-3RB320-C	1321-3RAB320-C	1321-3RB320-C	1321-3RAB320-C
20BD325	Heavy Duty	250	1321-3RB320-C	1321-3RAB320-C	1321-3RB320-C	1321-3RAB320-C
20BD325	Normal Duty	250	1321-3RB320-C	1321-3RAB320-C	1321-3RB320-C	1321-3RAB320-C
20BD365	Heavy Duty	250	1321-3RB320-C	1321-3RAB320-C	1321-3RB320-C	1321-3RAB320-C
20BD365	Normal Duty	300	1321-3RB400-C	1321-3RAB400-C	1321-3RB400-C	1321-3RAB400-C
20BD415	Heavy Duty	300	1321-3RB400-C	1321-3RAB400-C	1321-3RB400-C	1321-3RAB400-C
20BD415	Normal Duty	350	1321-3R500-C	1321-3RA500-C	1321-3RB400-C	1321-3RAB400-C
20BD481	Heavy Duty	350	1321-3R500-C	1321-3RA500-C	1321-3RB400-C	1321-3RAB400-C
20BD481	Normal Duty	400	1321-3R500-C	1321-3RA500-C	1321-3R500-C	1321-3RA500-C
20BD535	Heavy Duty	400	1321-3R500-C	1321-3RA500-C	1321-3R500-C	1321-3RA500-C
20BD535	Normal Duty	450	1321-3R600-C	1321-3RA600-C	1321-3R500-C	1321-3RA500-C
20BD600	Heavy Duty	450	1321-3R600-C	1321-3RA600-C	1321-3R500-C	1321-3RA500-C
20BD600	Normal Duty	500	1321-3R600-C	1321-3RA600-C	1321-3R600-C	1321-3RA600-C
20BD730	Heavy Duty	500	1321-3R600-C	1321-3RA600-C	1321-3R600-C	1321-3RA600-C
20BD730	Normal Duty	600	1321-3R750-E	1321-3RA750-E	1321-3R750-E	1321-3RA750-E
20BD875	Heavy Duty	600	1321-3R750-E	1321-3RA750-E	1321-3R750-E	1321-3RA750-E
20BD875	Normal Duty	700	1321-3R850-C	1321-3RA850-C	1321-3R850-C	1321-3RA850-C

(1) Input line reactors were sized based on the NEC fundamental motor amps. Output line reactors were sized based on the VFD rated output currents.

(2) 4% impedance.

600V, 60 Hz, Three-Phase, 3% Impedance

			Input Line Reactor[1]		Output Line Reactor[1]	
			IP00 (Open Style)	IP11 (NEMA/UL Type 1)	IP00 (Open Style)	IP11 (NEMA/UL Type 1)
Drive Cat. No.	Duty	Hp	Cat. No.	Cat. No.	Cat. No.	Cat. No.
20BE1P7	Heavy Duty	0.5	1321-3R1-C	1321-3RA1-C	1321-3R2-B	1321-3RA2-B
20BE1P7	Normal Duty	1	1321-3R2-B	1321-3RA2-B	1321-3R2-B	1321-3RA2-B
20BE2P7	Heavy Duty	1	1321-3R2-B	1321-3RA2-B	1321-3R4-D	1321-3RA4-D
20BE2P7	Normal Duty	2	1321-3R4-D	1321-3RA4-D	1321-3R4-D	1321-3RA4-D
20BE3P9	Heavy Duty	2	1321-3R4-D	1321-3RA4-D	1321-3R4-C	1321-3RA4-C
20BE3P9	Normal Duty	3	1321-3R4-C	1321-3RA4-C	1321-3R4-C	1321-3RA4-C
20BE6P1	Heavy Duty	3	1321-3R4-C	1321-3RA4-C	1321-3R8-C	1321-3RA8-C
20BE6P1	Normal Duty	5	1321-3R8-C	1321-3RA8-C	1321-3R8-C	1321-3RA8-C
20BE9P0	Heavy Duty	5	1321-3R8-C	1321-3RA8-C	1321-3R12-C	1321-3RA12-C
20BE9P0	Normal Duty	7.5	1321-3R12-C	1321-3RA12-C	1321-3R12-C	1321-3RA12-C
20BE011	Heavy Duty	7.5	1321-3R12-C	1321-3RA12-C	1321-3R12-B	1321-3RA12-B
20BE011	Normal Duty	10	1321-3R12-B	1321-3RA12-B	1321-3R12-B	1321-3RA12-B
20BE017	Heavy Duty	10	1321-3R12-B	1321-3RA12-B	1321-3R18-B	1321-3RA18-B
20BE017	Normal Duty	15	1321-3R18-B	1321-3RA18-B	1321-3R18-B	1321-3RA18-B
20BE022	Heavy Duty	15	1321-3R18-B	1321-3RA18-B	1321-3R25-B	1321-3RA25-B
20BE022	Normal Duty	20	1321-3R25-B	1321-3RA25-B	1321-3R25-B	1321-3RA25-B
20BE027	Heavy Duty	20	1321-3R25-B	1321-3RA25-B	1321-3R35-C	1321-3RA35-C
20BE027	Normal Duty	25	1321-3R35-C	1321-3RA35-C	1321-3R35-C	1321-3RA35-C
20BE032	Heavy Duty	25	1321-3R35-C	1321-3RA35-C	1321-3R35-B	1321-3RA35-B
20BE032	Normal Duty	30	1321-3R35-B	1321-3RA35-B	1321-3R35-B	1321-3RA35-B
20BE041	Heavy Duty	30	1321-3R35-B	1321-3RA35-B	1321-3R45-B	1321-3RA45-B
20BE041	Normal Duty	40	1321-3R45-B	1321-3RA45-B	1321-3R45-B	1321-3RA45-B
20BE052	Heavy Duty	40	1321-3R45-B	1321-3RA45-B	1321-3R55-B	1321-3RA55-B
20BE052	Normal Duty	50	1321-3R55-B	1321-3RA55-B	1321-3R55-B	1321-3RA55-B
20BE062	Heavy Duty	50	1321-3R55-B	1321-3RA55-B	1321-3R80-B	1321-3RA80-B
20BE062	Normal Duty	60	1321-3R80-B	1321-3RA80-B	1321-3R80-B	1321-3RA80-B
20BE077	Heavy Duty	60	1321-3R80-B	1321-3RA80-B	1321-3R80-B	1321-3RA80-B
20BE077	Normal Duty	75	1321-3R80-B	1321-3RA80-B	1321-3R80-B	1321-3RA80-B
20BE099	Heavy Duty	75	1321-3R80-B	1321-3RA80-B	1321-3R80-B	1321-3RA80-B
20BE099	Normal Duty	100	1321-3R100-B	1321-3RA100-B	1321-3R100-B	1321-3RA100-B
20BE125	Heavy Duty	100	1321-3R100-B	1321-3RA100-B	1321-3R100-B	1321-3RA100-B
20BE125	Normal Duty	125	1321-3R130-B	1321-3RA130-B	1321-3R130-B	1321-3RA130-B
20BE144	Heavy Duty	125	1321-3R130-B	1321-3RA130-B	1321-3R130-B	1321-3RA130-B
20BE144	Normal Duty	150	1321-3R160-B	1321-3RA160-B	1321-3R160-B	1321-3RA160-B

(1) Input line reactors were sized based on the NEC fundamental motor amps. Output line reactors were sized based on the VFD rated output currents.

600V, 60 Hz, Three-Phase, 5% Impedance

			Input Line Reactor[1]		Output Line Reactor[1]	
			IP00 (Open Style)	IP11 (NEMA/UL Type 1)	IP00 (Open Style)	IP11 (NEMA/UL Type 1)
Drive Cat. No.	Duty	Hp	Cat. No.	Cat. No.	Cat. No.	Cat. No.
20BE1P7	Heavy Duty	0.5	1321-3R1-B	1321-3RA1-B	1321-3R2-C	1321-3RA2-C
20BE1P7	Normal Duty	1	1321-3R2-C	1321-3RA2-C	1321-3R2-C	1321-3RA2-C
20BE2P7	Heavy Duty	1	1321-3R2-C	1321-3RA2-C	1321-3R4-D[2]	1321-3RA4-D[2]
20BE2P7	Normal Duty	2	1321-3R4-D[2]	1321-3RA4-D[2]	1321-3R4-D[2]	1321-3RA4-D[2]
20BE3P9	Heavy Duty	2	1321-3R4-D[2]	1321-3RA4-D[2]	1321-3R4-D	1321-3RA4-D
20BE3P9	Normal Duty	3	1321-3R4-D	1321-3RA4-D	1321-3R4-D	1321-3RA4-D
20BE6P1	Heavy Duty	3	1321-3R4-D	1321-3RA4-D	1321-3R8-D	1321-3RA8-D
20BE6P1	Normal Duty	5	1321-3R8-D	1321-3RA8-D	1321-3R8-D	1321-3RA8-D
20BE9P0	Heavy Duty	5	1321-3R8-D	1321-3RA8-D	1321-3R12-C[2]	1321-3RA12-C[2]
20BE9P0	Normal Duty	7.5	1321-3R12-C[2]	1321-3RA12-C[2]	1321-3R12-C[2]	1321-3RA12-C[2]
20BE011	Heavy Duty	7.5	1321-3R12-C[2]	1321-3RA12-C[2]	1321-3R12-C	1321-3RA12-C
20BE011	Normal Duty	10	1321-3R12-C	1321-3RA12-C	1321-3R12-C	1321-3RA12-C
20BE017	Heavy Duty	10	1321-3R12-C	1321-3RA12-C	1321-3R18-C	1321-3RA18-C
20BE017	Normal Duty	15	1321-3R18-C	1321-3RA18-C	1321-3R18-C	1321-3RA18-C
20BE022	Heavy Duty	15	1321-3R18-C	1321-3RA18-C	1321-3R25-C[2]	1321-3RA25-C[2]
20BE022	Normal Duty	20	1321-3R25-C[2]	1321-3RA25-C[2]	1321-3R25-C[2]	1321-3RA25-C[2]
20BE027	Heavy Duty	20	1321-3R25-C[2]	1321-3RA25-C[2]	1321-3R35-C[2]	1321-3RA35-C[2]
20BE027	Normal Duty	25	1321-3R35-C[2]	1321-3RA35-C[2]	1321-3R35-C[2]	1321-3RA35-C[2]
20BE032	Heavy Duty	25	1321-3R35-C[2]	1321-3RA35-C[2]	1321-3R35-C[2]	1321-3RA35-C[2]
20BE032	Normal Duty	30	1321-3R35-C[2]	1321-3RA35-C[2]	1321-3R35-C[2]	1321-3RA35-C[2]
20BE041	Heavy Duty	30	1321-3R35-C[2]	1321-3RA35-C[2]	1321-3R45-C	1321-3RA45-C
20BE041	Normal Duty	40	1321-3R45-C	1321-3RA45-C	1321-3R45-C	1321-3RA45-C
20BE052	Heavy Duty	40	1321-3R45-C	1321-3RA45-C	1321-3R55-C	1321-3RA55-C
20BE052	Normal Duty	50	1321-3R55-C	1321-3RA55-C	1321-3R55-C	1321-3RA55-C
20BE062	Heavy Duty	50	1321-3R55-C	1321-3RA55-C	1321-3R80-C	1321-3RA80-C
20BE062	Normal Duty	60	1321-3R80-C	1321-3RA80-C	1321-3R80-C	1321-3RA80-C
20BE077	Heavy Duty	60	1321-3R80-C	1321-3RA80-C	1321-3R80-C	1321-3RA80-C
20BE077	Normal Duty	75	1321-3R80-C	1321-3RA80-C	1321-3R80-C	1321-3RA80-C
20BE099	Heavy Duty	75	1321-3R80-C	1321-3RA80-C	1321-3R80-C	1321-3RA80-C
20BE099	Normal Duty	100	1321-3R100-C	1321-3RA100-C	1321-3R100-C	1321-3RA100-C
20BE125	Heavy Duty	100	1321-3R100-C	1321-3RA100-C	1321-3R100-C	1321-3RA100-C
20BE125	Normal Duty	125	1321-3R130-C[2]	1321-3RA130-C[2]	1321-3R130-C[2]	1321-3RA130-C[2]
20BE144	Heavy Duty	125	1321-3R130-C[2]	1321-3RA130-C[2]	1321-3R130-C[2]	1321-3RA130-C[2]
20BE144	Normal Duty	150	1321-3R160-C[2]	1321-3RA160-C[2]	1321-3R160-C[2]	1321-3RA160-C[2]

(1) Input line reactors were sized based on the NEC fundamental motor amps. Output line reactors were sized based on the VFD rated output currents.

(2) 4% impedance.

Important User Information

Read this document and the documents listed in the additional resources section about installation, configuration, and operation of this equipment before you install, configure, operate, or maintain this product. Users are required to familiarize themselves with installation and wiring instructions in addition to requirements of all applicable codes, laws, and standards.

Activities including installation, adjustments, putting into service, use, assembly, disassembly, and maintenance are required to be carried out by suitably trained personnel in accordance with applicable code of practice.

If this equipment is used in a manner not specified by the manufacturer, the protection provided by the equipment may be impaired.

In no event will Rockwell Automation, Inc. be responsible or liable for indirect or consequential damages resulting from the use or application of this equipment.

The examples and diagrams in this manual are included solely for illustrative purposes. Because of the many variables and requirements associated with any particular installation, Rockwell Automation, Inc. cannot assume responsibility or liability for actual use based on the examples and diagrams.

No patent liability is assumed by Rockwell Automation, Inc. with respect to use of information, circuits, equipment, or software described in this manual.

Reproduction of the contents of this manual, in whole or in part, without written permission of Rockwell Automation, Inc., is prohibited.

Documentation Feedback

Your comments will help us serve your documentation needs better. If you have any suggestions on how to improve this document, complete this form, publication RA-DU002, available at http://www.rockwellautomation.com/literature/.

Allen-Bradley, Rockwell Software, Rockwell Automation, and LISTEN. THINK. SOLVE are trademarks of Rockwell Automation, Inc.
Trademarks not belonging to Rockwell Automation are property of their respective companies.

Rockwell Otomasyon Ticaret A.Ş., Kar Plaza İş Merkezi E Blok Kat:6 34752 İçerenköy, İstanbul, Tel: +90 (216) 5698400

www.rockwellautomation.com

Power, Control and Information Solutions Headquarters

Americas: Rockwell Automation, 1201 South Second Street, Milwaukee, WI 53204-2496 USA, Tel: (1) 414.382.2000, Fax: (1) 414.382.4444
Europe/Middle East/Africa: Rockwell Automation NV, Pegasus Park, De Kleetlaan 12a, 1831 Diegem, Belgium, Tel: (32) 2 663 0600, Fax: (32) 2 663 0640
Asia Pacific: Rockwell Automation, Level 14, Core F, Cyberport 3, 100 Cyberport Road, Hong Kong, Tel: (852) 2887 4788, Fax: (852) 2508 1846

Publication 20B-TD001H-EN-P - July 2014
Supersedes Publication 20B-TD001G-EN-P - July 2013

Copyright © 2014 Rockwell Automation, Inc. All rights reserved. Printed in the U.S.A.

User Manual

Allen-Bradley

PowerFlex 20-HIM-A6 and 20-HIM-C6S HIM (Human Interface Module)

FRN 1.xxx - 2.xxx

Allen-Bradley • Rockwell Software

Rockwell Automation

Important User Information

Solid-state equipment has operational characteristics differing from those of electromechanical equipment. Safety Guidelines for the Application, Installation and Maintenance of Solid State Controls (publication SGI-1.1 available from your local Rockwell Automation sales office or online at http://www.rockwellautomation.com/literature/) describes some important differences between solid-state equipment and hard-wired electromechanical devices. Because of this difference, and also because of the wide variety of uses for solid-state equipment, all persons responsible for applying this equipment must satisfy themselves that each intended application of this equipment is acceptable.

In no event will Rockwell Automation, Inc. be responsible or liable for indirect or consequential damages resulting from the use or application of this equipment.

The examples and diagrams in this manual are included solely for illustrative purposes. Because of the many variables and requirements associated with any particular installation, Rockwell Automation, Inc. cannot assume responsibility or liability for actual use based on the examples and diagrams.

No patent liability is assumed by Rockwell Automation, Inc. with respect to use of information, circuits, equipment, or software described in this manual.

Reproduction of the contents of this manual, in whole or in part, without written permission of Rockwell Automation, Inc., is prohibited.

Throughout this manual, when necessary, we use notes to make you aware of safety considerations.

	WARNING: Identifies information about practices or circumstances that can cause an explosion in a hazardous environment, which may lead to personal injury or death, property damage, or economic loss.
	ATTENTION: Identifies information about practices or circumstances that can lead to personal injury or death, property damage, or economic loss. Attentions help you identify a hazard, avoid a hazard, and recognize the consequence.
	SHOCK HAZARD: Labels may be on or inside the equipment, for example, a drive or motor, to alert people that dangerous voltage may be present.
	BURN HAZARD: Labels may be on or inside the equipment, for example, a drive or motor, to alert people that surfaces may reach dangerous temperatures.
IMPORTANT	Identifies information that is critical for successful application and understanding of the product.

Allen-Bradley, Rockwell Software, Rockwell Automation, TechConnect, and PowerFlex are trademarks of Rockwell Automation, Inc.

Trademarks not belonging to Rockwell Automation are property of their respective companies.

This manual contains new and updated information.

New and Updated Information

This table contains the changes made to this revision.

Topic	Page
Revised steps in various procedures to add clarity.	Throughout manual

Notes:

Preface

Conventions Used in This Manual 9
Rockwell Automation Support 9
Local Product Support 9
Technical Product Assistance 9
Additional Resources 10

Chapter 1

Getting Started

HIM Types 11
Features 11
Compatible Products 12
Safety Precautions 12

Chapter 2

Installing the HIM

Installing the 20-HIM-A6 HIM 14
In the Drive HIM Bezel 14
Using Drive Port 2 Connection for Hand-Held Operation 16
In a Remote-Mount HIM Bezel (20-HIM-B1) 17
Installing the 20-HIM-C6S HIM 18
Removing the HIM 20

Chapter 3

HIM Components

HIM Keypad 21
Soft Keys 21
Navigation and Number Keys 22
Single-function Keys 23
LCD Display Elements 24
Status Bar 24
Data Area 24
Soft Key Labels 25
Main Screens 26
Status Screen 26
Process Screen 27
Control Screen 28
Folder Screens 29
Fault Display Screen 30

Chapter 4

Using the HIM

Initial HIM Operation on New Drive Powerup 31
Selecting Display Contrast 32
Setting the Date/Time for PowerFlex 750-Series Drives 33
Creating a User-Defined Drive/Peripheral Name 35
Customizing the Process Screen 36
Selecting Multi-Line or Single-Line View 36
Changing Displayed Items, Adding a Scale Factor, or Customizing Text 37
Resetting the Drive/Peripherals 38
Setting Factory Defaults 38
Setting PowerFlex 750-Series Drives/Peripherals to Factory Defaults 38
Setting PowerFlex 7-Class Drives/Peripherals to Factory Defaults 39
Setting Display Flashing for Fault Indication 40
Setting Display Flashing for Alarm Indication 41
Viewing/Editing Drive or Peripheral Parameters 42
Selecting File-Group-Parameter or Linear List View 42
Direct Parameter Access Method 42
Alternate Linear List Access Method 43
Viewing/Clearing Drive Faults or Alarms 44
Viewing Peripheral Diagnostic Items 45
Viewing/Clearing Peripheral Events 46
Checking Drive and Peripheral Firmware Revisions 47
Using the CopyCat Function 48
Creating CopyCat Files 48
Renaming CopyCat Files 49
Deleting CopyCat Files 51
Changing PowerFlex 750-Series Drive Parameter Associations 52
Using Individual Screen Entry Method 52
Using Direct Numeric Entry Method 54
Linking Parameters in PowerFlex 700/700S Drives 55
Establishing a Link 55
Deleting an Established Link 56
Using a Password 57
Setting/Changing the Password 57
Changing Password-protected Drive/Peripheral Parameters 58
Disabling Password Protection 59
Initiating PowerFlex 750-Series Drive Port Verification 60
Conflict Types 60
Resolving ‘Changed’ or ‘Requires Configuration’ Conflicts 61
Resolving ‘Not Functioning’, ‘Not Supported’, or ‘Invalid Duplicate’ Conflicts 61
Changing Language for the Display Text 62
Updating the HIM Firmware or Language 63

Appendix A

Specifications

Communications. 65
Electrical 65
Mechanical 65
Environmental. 65
Regulatory Compliance. 66

Appendix B

HIM Parameters

Parameter List 67

Appendix C

History of Changes

20HIM-UM001C-EN-P, January 2012. 69
20HIM-UM001B-EN-P, October 2010 70
20HIM-UM001A-EN-P, January 2009. 70

Index

Notes:

This manual provides information about the enhanced PowerFlex 20-HIM-A6 and 20-HIM-C6S Human Interface Modules, and using them with PowerFlex 750-Series drives and PowerFlex® 7-Class drives.

Conventions Used in This Manual

The following conventions are used throughout this manual:

- Parameter names are shown in the format **Parameter xx - [*]**. The xx represents the parameter number. The * represents the parameter name—for example **Parameter 01 - [Port Number]**.
- The HIM or drive firmware revision number (FRN) is displayed as FRN *X.xxx*, where '*X*' is the major revision number and '*xxx*' is the minor revision number.

Rockwell Automation Support

Rockwell Automation offers support services worldwide, with over 75 sales and support offices, over 500 authorized distributors, and over 250 authorized systems integrators located through the United States alone. In addition, Rockwell Automation representatives are in every major country in the world.

Local Product Support

Contact your local Rockwell Automation representative for the following:

- Sales and order support
- Product technical training
- Warranty support
- Support service agreements

Technical Product Assistance

For technical assistance, please review the information in Chapter 4, Using the HIM, first. If you still have problems, then access the Allen-Bradley Technical Support website at http://www.ab.com/support/abdrives or contact Rockwell Automation.

Additional Resources

These documents contain additional information concerning related products from Rockwell Automation.

Resource	Description
PowerFlex 750-Series AC Drive Installation Instructions, publication 750-IN001	Information on installing and programming PowerFlex 750-Series AC drives
PowerFlex 750-Series AC Drives Programming Manual, publication 750-PM001	
PowerFlex 750-Series AC Drives Technical Data, publication 750-TD001	
PowerFlex 70 User Manual, publication 20A-UM001	Information on installing and programming PowerFlex 70 standard control and enhanced control drives.
PowerFlex 70/700 Reference Manual, publication PFLEX-RM001	
PowerFlex 70 Enhanced Control and 700 Vector Control Reference Manual, publication PFLEX-RM004	
PowerFlex 700 Series A User Manual, publication 20B-UM001	Information on installing and programming PowerFlex 700 standard control and vector control Series A drives, and PowerFlex 700 vector control Series B drives.
PowerFlex 700 Series B User Manual, publication 20B-UM002	
PowerFlex 70/700 Reference Manual, publication PFLEX-RM001	
PowerFlex 70 Enhanced Control and 700 Vector Control Reference Manual, publication PFLEX-RM004	
PowerFlex 700H Installation Instructions, publication PFLEX-IN006	Information on installing and programming PowerFlex 700H drives.
PowerFlex 700H Programming Manual, publication 20C-PM001	
PowerFlex 700S with Phase I Control Installation Manual (Frames 1…6), publication 20D-IN024	Information on installing and programming PowerFlex 700S drives.
PowerFlex 700S with Phase I Control Installation Manual (Frames 9 and 10), publication PFLEX-IN006	
PowerFlex 700S with Phase I Control User Manual (All Frame Sizes), publication 20D-UM001	
PowerFlex 700S with Phase I Control Reference Manual, publication PFLEX-RM002	
PowerFlex 700S with Phase II Control Installation Manual (Frames 1…6), publication 20D-IN024	
PowerFlex 700S with Phase II Control Installation Manual (Frames 9…14), publication PFLEX-IN006	
PowerFlex 700S with Phase II Control Programming Manual (All Frame Sizes), publication 20D-PM001	
PowerFlex 700S with Phase II Control Reference Manual, publication PFLEX-RM003	
PowerFlex 700L User Manual, publication 20L-UM001	Information on installing and programming PowerFlex 700L Liquid-Cooled AC drives.
PowerFlex Digital DC Drive User Manual, publication 20P-UM001	Information on installing and programming PowerFlex Digital DC drives.

You can view or download publications at http://literature.rockwellautomation.com. To order paper copies of technical documentation, contact your local Allen-Bradley distributor or Rockwell Automation sales representative.

To find your local Rockwell Automation distributor or sales representative, visit http://www.rockwellautomation.com/locations.

For information such as firmware updates or answers to drive-related questions, go to the Drives Service & Support website at http://www.ab.com/support/abdrives and click the Downloads or Knowledgebase link.

Getting Started

The PowerFlex 20-HIM-A6 and 20-HIM-C6S HIMs provide a communication interface to configure and monitor PowerFlex 753 and PowerFlex 755 AC drives and their connected peripherals. These HIMs are also backward compatible with all PowerFlex 7-Class drives, but with limited functionality.

Topic	Page
HIM Types	11
Features	11
Compatible Products	12
Safety Precautions	12

HIM Types

At the time of publication, the following enhanced PowerFlex 7-Class HIMs are available.

HIM Catalog Number	Description
20-HIM-A6 (1)	NEMA Type 1 HIM
20-HIM-C6S (1)	Remote-Mount NEMA Type 4X/12 HIM

(1) Supports English, Portuguese, French, Italian, German, Spanish, and Dutch languages. The HIM firmware can be updated in the field to support other available languages. **Important:** The language selected for download at the Rockwell Automation Web Updates website at http://www.ab.com/support/abdrives/webupdate will replace all other supported languages—except English, which will always remain as the default language.

Features

The enhanced PowerFlex 20-HIM-A6 and 20-HIM-C6S HIMs provide the following benefits over the more basic PowerFlex 7-Class HIMs (catalog numbers 20-HIM-A3, 20-HIM-A5, 20-HIM-C3S, and 20-HIM-C5S):

- Full-numeric keypad with fully-integrated navigation capability to more easily configure and monitor the drive and its connected peripherals.
- Better keypad touch response and improved tactile feel to provide more gratifying, error-free data entry.
- More intuitive access and new menu structures that increase HIM operating efficiency.
- Simplified custom name assignments for drive/peripherals (for example, Pump 1) to reduce required key presses.

- Support for English, and customary European and Asian languages.
- Dynamic soft keys that change functions/names based on screen or data entry mode to reduce keypad keys and simplify HIM operation.
- Customizable drive monitoring items that can be displayed as a list on the process screen or as individual screens.
- New flashing LCD screen to provide enhanced visibility when faults or alarms are detected.

Compatible Products

At the time of publication, the 20-HIM-A6 and 20-HIM-C6S HIMs are compatible with the following products:

- PowerFlex 753 drives
- PowerFlex 755 drives
- PowerFlex 70 drives with standard or enhanced control
- PowerFlex 700 drives with standard or vector control
- PowerFlex 700H drives
- PowerFlex 700S drives with Phase I or Phase II control
- PowerFlex 700L drives with 700 vector control or 700S control
- PowerFlex 700AFE (Active Front End)
- PowerFlex Digital DC drives
- PowerFlex 7000 drives
- SMC™ Flex smart motor controllers
- SMC-50 smart motor controllers

Safety Precautions

Please read the following safety precautions carefully.

ATTENTION: Risk of injury or death exists from machine motion when using the HIM to Start/Stop/Jog or configure the drive.

ATTENTION: Risk of injury or equipment damage exists. Only personnel familiar with drive and power products and the associated machinery should plan or implement the installation, startup, configuration, and subsequent maintenance of the product using the HIM. Failure to comply may result in injury and/or equipment damage.

Installing the HIM

This chapter provides instructions for installing and removing the HIM.

Topic	Page
Installing the 20-HIM-A6 HIM	14
Installing the 20-HIM-C6S HIM	18
Removing the HIM	20

There are two types of enhanced PowerFlex 7-Class HIM:

- NEMA Type 1 (catalog number 20-HIM-A6)
- Remote-mount NEMA Type 4X/12 (catalog number 20-HIM-C6S), which also includes a 1202-C30 interface cable for connection to the drive

20-HIM-A6 HIM

20-HIM-C6S HIM

Installing the 20-HIM-A6 HIM

The 20-HIM-A6 (NEMA Type 1) HIM is normally installed in the HIM bezel (drive Port 1) on the front of the drive. For temporary hand-held operation, the HIM can be plugged into drive Port 2 (near the bottom of the drive control pod for PowerFlex 750-Series drives, or on the bottom of the drive for PowerFlex 7-Class drives) using a 1 m/3.28 ft. long 20-HIM-H10 cable. For applications requiring the HIM to be located remotely, the HIM can be installed in a remote-mount HIM bezel (catalog number 20-HIM-B1) in a suitable location. The 20-HIM-B1 remote-mount HIM bezel includes a 3 m/9.8 ft. long 1202-C30 cable.

In the Drive HIM Bezel

PowerFlex 750-Series IP20, NEMA/UL Open Type Drives

Place the HIM into the drive HIM bezel by inserting it straight back into the top of the bezel and then sliding it down into the base of the bezel onto the mating connector.

TIP The HIM can be installed in the drive HIM bezel with the drive powered or unpowered.

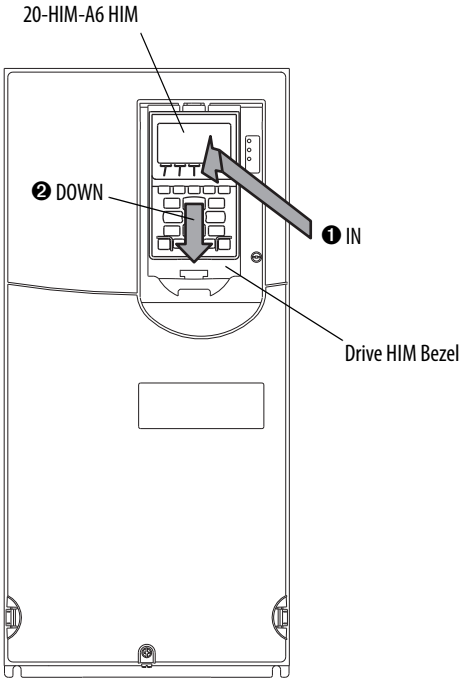

(PowerFlex 755 drive shown)

PowerFlex 750-Series IP54, NEMA/UL Type 12 Drives

1. Unfasten and remove the cover as shown below using the following recommended tools:
   - Screwdriver: 6.4 mm (0.25 in.) flat or T20 Hexalobular
   - Hex socket: 7 mm

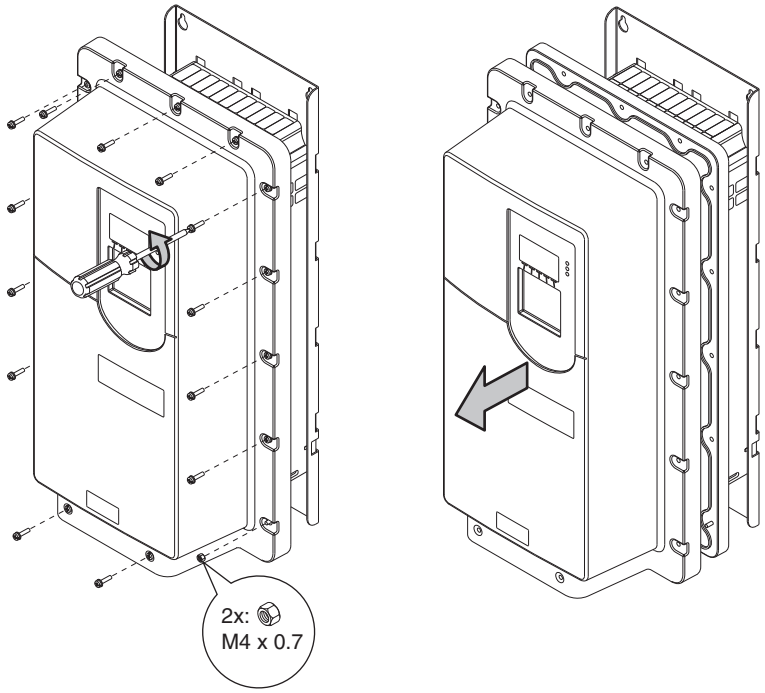

2. Place the HIM into the drive HIM bezel by inserting it straight back into the top of the bezel and then sliding it down into the base of the bezel onto the mating connector as shown on page 14.
3. Replace the cover and the fasteners.
4. Tighten all screws and nuts to the recommended torque of 0.68 N•m (6.0 lb•in).

Using Drive Port 2 Connection for Hand-Held Operation

PowerFlex 750-Series Drive

Attach a 20-HIM-H10 cable to the bottom of the HIM. Then plug the other end of the cable into Port 2 near the bottom of the drive control pod.

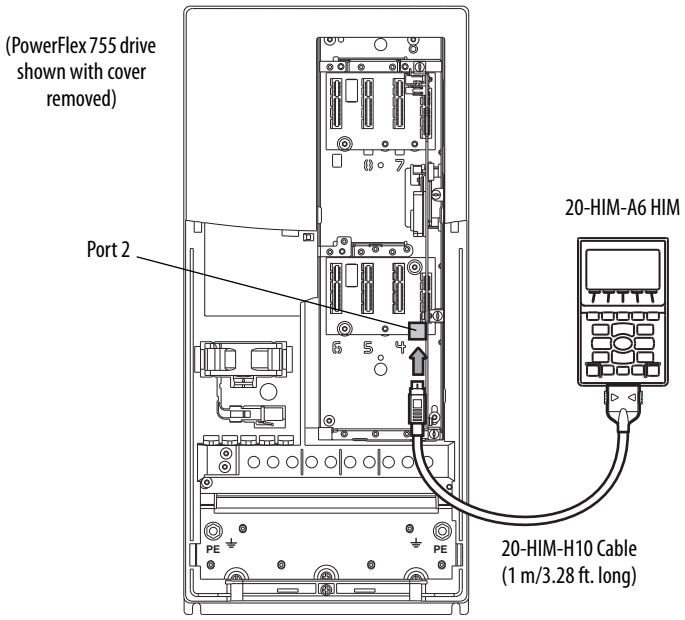

PowerFlex 7-Class Drive

Attach a 20-HIM-H10 cable to the bottom of the HIM. Then plug the other end of the cable into Port 2 on the bottom of the drive.

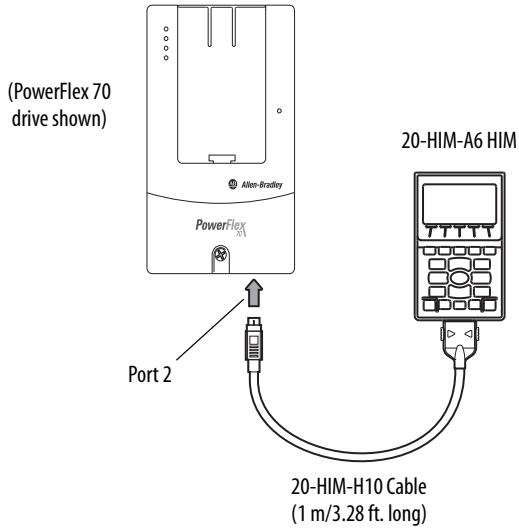

In a Remote-Mount HIM Bezel (20-HIM-B1)

1. If the remote-mount HIM bezel is not mounted, see the HIM Bezel Installation Instructions, publication 20HIM-IN002, for mounting details.
2. Route the 3 m/9.8 ft. long 1202-C30 bezel cable (included with the 20-HIM-B1 remote-mount HIM bezel) to the drive.
3. Connect the bezel cable to the DPI Port 2 on the drive as shown on page 16 for a PowerFlex 750-Series drive or a PowerFlex 7-Class drive.
4. Install the HIM into the remote-mount HIM bezel.

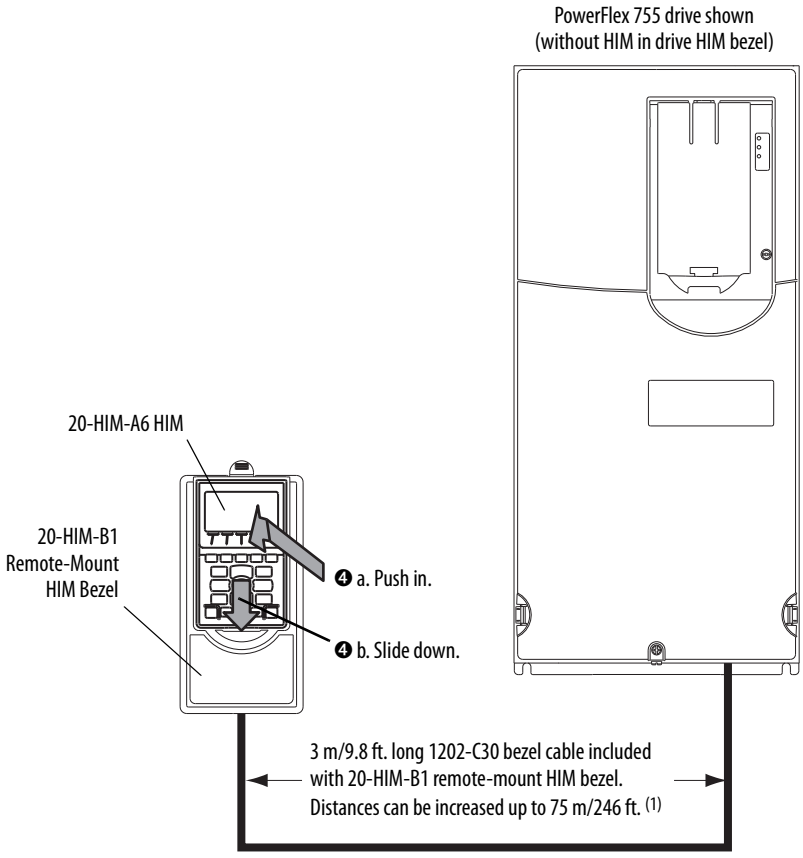

(1) To increase this distance, use one of the following cables:

- 1202-H03 Extension cable (0.3 m/0.98 ft. long)
- 1202-H13 Extension cable (1.0 m/3.28 ft. long)
- 1202-H30 Extension cable (3.0 m/9.8 ft. long)
- 1202-CBL-KIT-100M cable

Note that a cable distance greater than 30 m/98.4 ft. is not CE compliant.

Installing the 20-HIM-C6S HIM

The 20-HIM-C6S (NEMA Type 4X/12) HIM is designed for remote installation and includes a 3 m/9.8 ft. long 1202-C30 cable. See Figure 1 for overall HIM dimensions. Choose an appropriate location to mount the 20-HIM-C6S HIM. The distance between the HIM and drive can be increased up to 75 m/246 ft. by using a 1202-Hxx extension cable or 1202-CBL-KIT-100M cable kit. However, a cable distance greater than 30 m/98.4 ft. is not CE compliant.

Figure 1 - 20-HIM-C6S HIM Dimensions

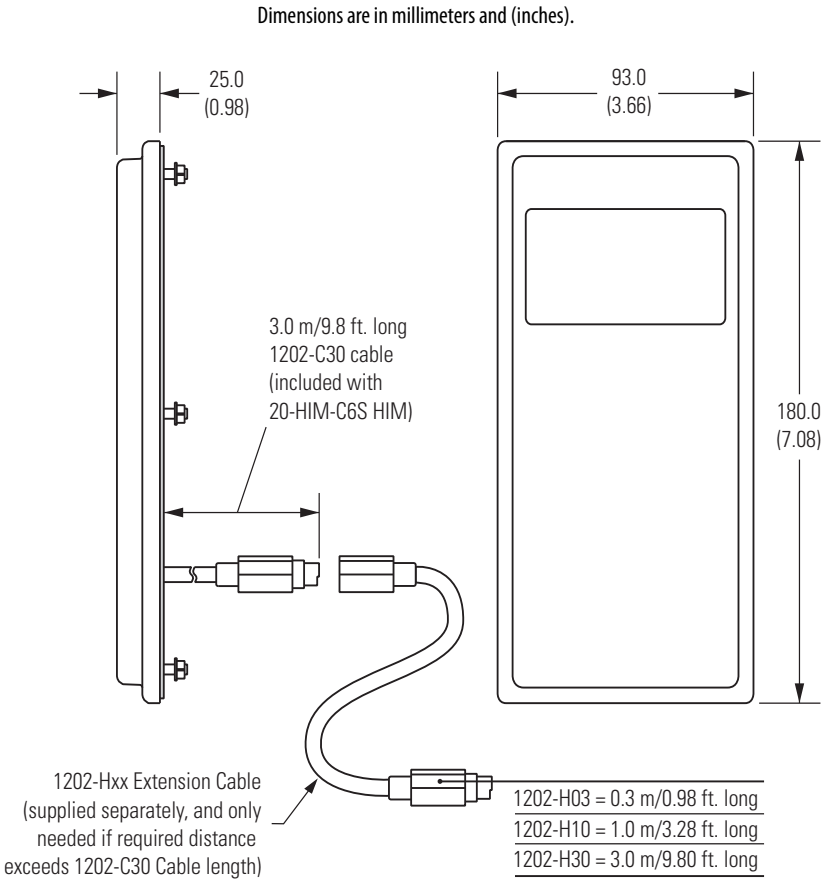

1. Drill the required hole pattern in the panel. See Figure 2 for dimensions.

TIP A conversion template (part number 336745-C01), provided with the 20-HIM-C6S HIM, includes a drilling pattern and mounting instructions to assist with HIM installation.

Figure 2 - Hole Pattern to Mount the 20-HIM-C6S HIM

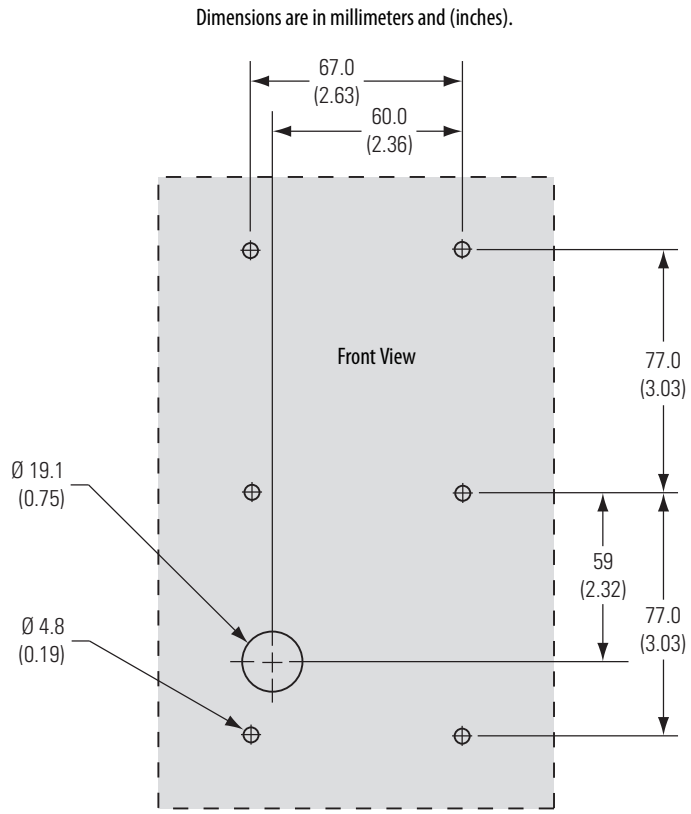

2. Peel the protective film from the gasketed surface on the back of the HIM.

IMPORTANT Adhesive coated gasket is designed for one-time only installation.

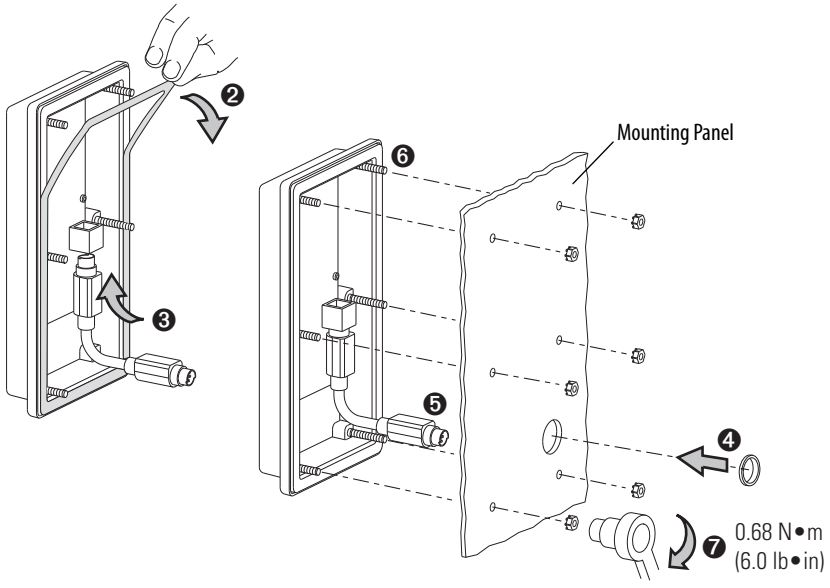

3. Insert the supplied 3 m/9.8 ft. long 1202-C30 HIM cable into the mating socket on the back of the HIM.
4. Install the supplied O-ring into the cable routing hole on the panel to protect the cable.
5. Route the HIM cable through the cable routing hole on the panel.
6. Align the six threaded studs of the HIM with the panel clearance holes, and place the HIM against the panel.
7. Tighten the nuts onto the six threaded studs of the HIM extending behind the panel.

   Recommended torque is 0.68 N•m (6.0 lb•in).
8. Route the HIM cable to the drive.
9. Connect the HIM cable to the DPI Port 2 on the drive as shown on page 16 for a PowerFlex 750-Series drive or a PowerFlex 7-Class drive.

Removing the HIM

ATTENTION: Risk of injury or equipment damage exists. If the HIM cable or remote-mount HIM bezel cable is disconnected from DPI Port 2 on the drive, the drive may fault. Determine how the drive will respond before disconnecting the cable.

IMPORTANT The Host drive can remain powered when removing the HIM. However, a fault will occur if the HIM is not the last controlling device and does not have Manual control of the Host drive. To avoid a fault in this case, access the HIM Control screen (shown on page 28), press the 7 key, and then remove the HIM from the Host drive.

Remove the HIM from the drive HIM bezel or the remote-mount HIM bezel in reverse order of how it was installed.

HIM Components

This chapter describes the components of the HIM.

Topic	Page
HIM Keypad	21
LCD Display Elements	24
Main Screens	26

HIM Keypad

The keypad consists of *soft keys*, navigation and number keys, and single-function keys, which are described in their respective subsections that follow.

Soft Keys

The *soft keys* on the HIM are located at the top of the keypad and highlighted below. Depending on the screen being displayed or the data entry mode being used, a *soft key* name and its function changes. When a dynamic *soft key* (up to a maximum of five keys) is active, its present function and corresponding Soft Key Label (Figure 3) is shown at the bottom of the HIM screen. For a list of possible *soft keys*, their names, and corresponding functions, see Soft Key Labels on page 25.

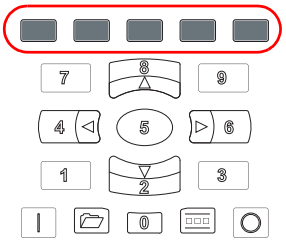

Navigation and Number Keys

The five blue multi-function keys (2, 4, 5, 6, and 8) shown below are used to do the following:

- Enter their respective numeric value
- Scroll menus/screens
- Perform corresponding functions displayed in the Data Area (see page 24)

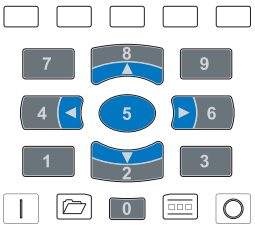

Multi-function Key	Name	Function
	2/Down Arrow	• Enters the numeric value '2'. • Scrolls down to select an item.
	4/Left Arrow	• Enters the numeric value '4'. • Scrolls left to select an item.
	5/Enter	• Enters the numeric value '5'. • Displays the next level of a selected menu item. • Enters new values. • Performs intended actions.
	6/Right Arrow	• Enters the numeric value '6'. • Scrolls right to select an item.
	8/Up Arrow	• Enters the numeric value '8'. • Scrolls up to select an item.

The five gray number keys (0, 1, 3, 7, and 9) are used only to enter their respective numeric value.

Single-function Keys

There are four single-function keys, which are highlighted below and listed in the table below. Each single-function key always performs only its dedicated function.

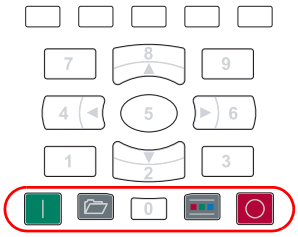

Single-function Key	Name	Function
	Start	Starts the drive.
(1)	Folders	Accesses folders for parameters, diagnostics, memory functions, preferences, and other tasks.
(1)	Controls	Accesses jog, direction, auto/manual, and other control functions.
	Stop	• Stops the drive or clears a fault. • This key is always active. • This key is controlled by drive parameter 307 [Start Stop Mode].

(1) During drive Start Up these keys are temporarily inactive.

LCD Display Elements

The basic HIM screen is divided into three display zones, which are shown in Figure 3 and described in their respective subsections that follow.

Figure 3 - HIM Display Zones

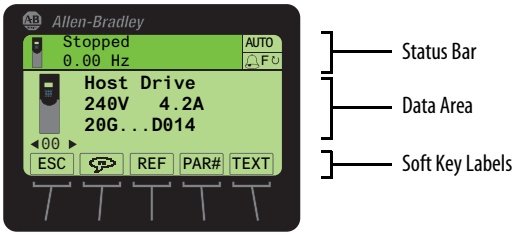

Status Bar

The Status Bar provides operating status information for the host drive.

Status Bar Element		Meaning
	Host Icon	A small image of the connected host drive.
Stopped	Status Text	Indicates present host drive operating status. Text flashes when a fault is present.
0.00 Hz	Feedback	Indicates drive output feedback (for example, Hz, RPM, amps, etc.)
AUTO / MAN	Mode Indication	Indicates Auto or Manual HIM status.
	Alarm Indication	Bell icon indicates that an alarm is present.
F↻ or R↺ (not shown)	Rotation Indication	Indicates Forward or Reverse direction of host drive operation.
DLX (not shown)	DeviceLogix Indication	Indicates when the host drive DeviceLogix feature is enabled.

Data Area

The Data Area displays the data or function presently being acted upon.

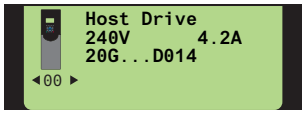

Data Area Element		Meaning
	Host or Device Icon	Image of the host drive or image of the device connected to the port selected.
◀ 00 ▶	Port Selection	Indicates selected port. Use the 4 ◀ or ▶ 6 navigation keys to select a port.
Host Drive	User-Definable Text	Top line of text in the Data Area can be edited by the user.

Soft Key Labels

The Soft Key Labels identify the present function of a corresponding Soft Key on the Key Pad. Different screens may show different Soft Key Labels.

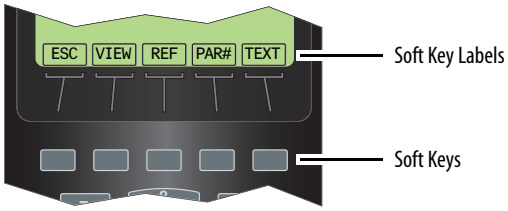

Soft Key Label	Name	Function
.	Decimal Point	Adds decimal point to the right-most position of a numeric value.
←	Backspace	Deletes the character to the left of the cursor.
+ / -	Sign	Changes the sign of a parameter value.
#	Number	Selects the Direct Numeric Entry Method to change PowerFlex 750-Series drive parameter associations.
	Language	Directly accesses the Select Language To Use screen.
▲	Scroll Up	• Scrolls up through display lines. • Increases a value.
▼	Scroll Down	• Scrolls down through display lines. • Decreases a value.
◀	Scroll Left	Scrolls left through display lines.
▶	Scroll Right	Scrolls right through display lines.
ACK	Acknowledge	Acknowledges the fault or alarm on the pop-up screen, stops the backlight from flashing, and keeps the pop-up screen active.
ALL	All	• Clears all faults, alarms or events when a pop-up box appears from a queue screen. • Restores all Host or Port device parameters to factory defaults.
CLR	Clear	• Deletes an entire text string. • Displays the Select Action pop-up box used to clear the selected fault, alarm or event, or the entire fault, alarm or event queue.
DEL	Delete	Deletes a highlighted character.
EDIT	Edit	• Accesses a displayed parameter to edit. • Accesses the Edit Process Display screen.
END	End	• Displays the end (least recent) fault, alarm or event in a queue • Scrolls to the end line of data on the Device Version information screen.
ENTER	Enter	• Displays the next level of a selected menu item. • Enters new values. • Performs the intended action.
ESC	Escape	• Cancels port verification conflict pop-up box during procedure to resolve a conflict. • Cancels the existing screen and returns to the previous screen. • Cancels an entry. • Cancels pop-up Fault Display screen. • Displays the time zone groups list screen (only when the Date/Time Set Edit Mode screen is shown).
EXP	Exponent	Allows data entry using scientific notation for 32-bit REAL (floating point) values.
FIX	Fix	Fixes 'Changed' or 'Requires Configuration' port verification conflicts upon power up.
INFO	Information	• Shows additional information about a selected port verification conflict upon power up. • Shows additional information about Set Default actions.
INS	Insert	Inserts a space to the left of a highlighted character.
LINK	Link	Displays a Link Edit pop-up box to link parameters (only PowerFlex 7-Class drives).
LOWER	Lower	Displays the lower 16 bits (bits 0…15) of a 32-bit Bit-type parameter.

Soft Key Label	Name	Function
MOST	Most	Restores most Host or Port device parameters to factory defaults.
PAR#	Parameter Number	Navigates directly to a parameter.
PGDN	Page Down	Scrolls down to the next page of data lines on the Device Version information screen.
PGUP	Page Up	Scrolls up to the previous page of data lines on the Device Version information screen.
REF	Reference	Enters the speed reference for the Host Drive.
RESET	Reset	Resets the Process screen's displayed monitoring items to the factory default monitoring items listed on page 36.
TEXT	Text	Edits user-definable text for the device selected.
TOP	Top	• Displays the top (most recent) fault, alarm or event in a queue. • Scrolls to the top line of data on the Device Version information screen.
UPPER	Upper	Displays the upper 16 bits (bits 16…31) of a 32-bit Bit-type parameter.
VIEW	View	• Toggles between select screens and views. • Displays the time stamp screen from a fault, alarm or event queue screen.
ZONES	Zones	Displays the Select Time Zone screen.

Main Screens

The HIM main screens include the Status screen, Process screen, Control screen, Folder screens, and Fault Display screens, which are described in their respective subsections that follow.

Status Screen

On power up, the Status screen (Figure 4) is shown by default. Depending on the type of host drive, the Status screen displays the following information.

Displayed Information	Host PowerFlex Drive	
	750-Series	7-Class
Selected device icon and port number	✔	✔
Device name (1)	✔	✔
Rating text (volts, amps)	✔	✔
Drive catalog text	✔	not applicable
Firmware version and hardware series	(2)	✔

(1) The displayed default device name is dependent on the host drive. The device name can be changed, for example, to Host Drive as shown in the screens below. See Creating a User-Defined Drive/Peripheral Name on page 35 for details.

(2) The firmware version and hardware series for a PowerFlex 750-Series drive can be shown using HIM menu screens. For details, see Checking Drive and Peripheral Firmware Revisions on page 47.

Figure 4 - Example Status Screens

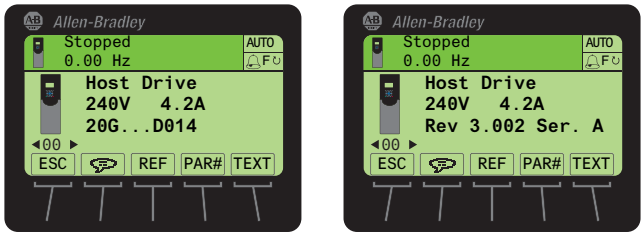

For PowerFlex 750-Series Drive

For PowerFlex 7-Class Drive

Status Screen Soft Keys

Label	Name	Function
ESC	Escape	Toggles between the Status and Process Display screens.
	Language Icon	Directly accesses the Select Language To Use screen.
REF	Reference	Enters the speed reference for the Host Drive.
PAR#	Parameter Number	Directly accesses a parameter for the device on selected port. (This soft key is not available if the device has no parameters.)
TEXT	Text	Edits user-definable text for the device on selected port.

Status Screen Navigation/Number Keys

Key	Name	Function	Screen Element
4	4/Left Arrow	Selects the device on previous port.	◂00 ▸
6	6/Right Arrow	Selects the device on next port.	

If you would rather see the Process screen (shown below) as the initial power-up screen, change the HIM **Parameter 03 - [Initial Screen]** value to '1' (Process Scrn). By default, when the HIM keys are not used for the time period set in **Parameter 07 - [User Dspy Time]**, the screen being displayed at that time will revert back to the initial screen. You can disable this feature by setting **Parameter 06 - [User Dspy Enable]** to '1' (Disable).

Process Screen

To display the Process screen, press the ESC *soft key* on the Status screen (Figure 4). The Process screen shows various drive monitoring parameters. Multi-line and Single-line views can be selected by pressing the VIEW *soft key*. The displayed default monitoring parameters can be changed. See Customizing the Process Screen on page 36 for details.

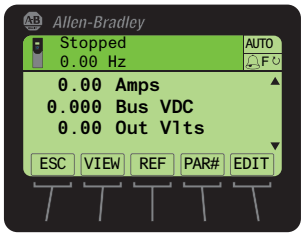

Process Screen Soft Keys

Label	Name	Function
ESC	Escape	Toggles between the Process Display and Status screens.
VIEW	View	Toggles between the multi-line and single-line views.
REF	Reference	Enters the speed reference for the Host Drive.
PAR#	Parameter Number	Directly accesses a parameter for the selected port device.
EDIT	Edit	Directly accesses the Edit Process Display screen.

Process Screen Navigation/Number Keys

Key	Name	Function	Screen Element
8	8/Up Arrow	Scrolls up through the display lines.	▲
2	2/Down Arrow	Scrolls down through the display lines.	▼

Control Screen

The Control screen (shown below) is used to directly control the drive. It displays vertical bar graphs of the drive's speed Reference and Feedback values, and a Key Function Map that corresponds to the navigation/number keys for drive control. Press the (Controls) key to display the Control screen.

IMPORTANT To navigate from the Control screen to another HIM menu screen, you must always press the ESC *soft key* to deactivate the Control screen and display the previous screen.

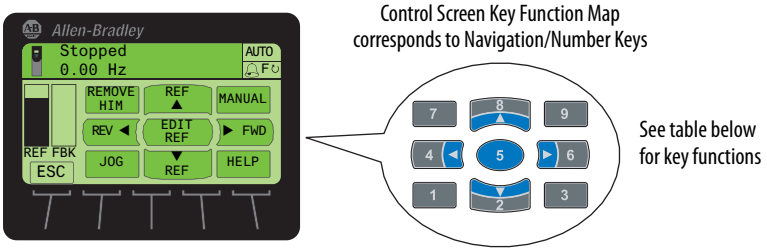

Control Screen Soft Key

Label	Name	Function
ESC	Escape	Deactivates the Control Screen and reverts back to the previous screen.

Control Screen Navigation/Number Keys

Label	Key	Function
JOG	1	Jogs the host drive.
▼ REF	2	Decreases the speed reference for the host drive.
HELP	3	Displays Rockwell Automation Drives Technical Support direct phone number, website address, and email address.
REV ◄	4	Sets the direction to reverse for the host drive.
EDIT REF	5	Allows direct data entry of the speed reference for the host drive.
► FWD	6	Sets the direction to forward for the host drive.
REMOVE HIM	7	Allows HIM removal without causing a fault if the HIM is not the last controlling device. (The REMOVE HIM label is not available when the HIM has manual control of the host drive. In this case, a fault will occur if the HIM is removed.)
REF ▲	8	Increases the speed reference for the host drive.
MANUAL	9	Switches between Auto and Manual modes.

Folder Screens

The drive and each connected peripheral has its own set of Folder screens:

Folder Screen	Description
PORTS	Displays a list of host drive ports to which peripherals are connected. The host drive is always Port 00. An icon appears for the device occupying the selected port.
DEV PARAM	Displays a list of available methods to access the device's parameters.
HOST PARAM (1)	Displays a list of available methods to access the host drive parameters.
DIAGNOSTIC	Displays a list of available diagnostic information items for the device.
MEMORY	Displays a list of available memory storage items for the device.
PROPERTIES	Displays a list of available user-defined convenience functions for the device.
START UP	Displays a list of available host drive start-up routines. This folder is not applicable for peripheral devices and is not shown.

(1) The HOST PARAM folder screen is only available for PowerFlex 750-Series peripherals that support use of Host Drive parameters (for example, the 20-750-DNET DeviceNet network communication option module).

To display the last-viewed Folder screen, press the (Folders) key. The Folder screen Data Area displays:

- Selected device and port number
- Host drive and peripheral folders

Figure 5 - Example Folder Screen (Device Parameters)

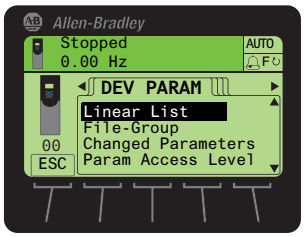

Folder Screen Soft Key

Label	Name	Function
ESC	Escape	Reverts back to the Status or Process Display screen.

Folder Screen Navigation/Number Keys

Key	Name	Function	Screen Element
2	2/Down Arrow	Scrolls down through the folder items.	▼
4	4/Left Arrow	Scrolls to the previous folder.	◀
5	5/Enter	Displays the next level screen for a selected folder item.	Not applicable
6	6/Right Arrow	Scrolls to the next folder.	▶
8	8/Up Arrow	Scrolls up through the folder items.	▲

Fault Display Screen

The pop-up Fault Display screen automatically appears when a fault condition is detected for the host drive or any connected peripheral. The pop-up Fault Display screen flashes to alert that a fault condition exists. The Fault Display screen (example shown below) provides the following information:

- Fault Code number
- Fault description
- Elapsed time (in hh:mm:ss format) from fault detection

The flash mode for the Fault Display screen can be changed. For details, see Setting Display Flashing for Fault Indication on page 40.

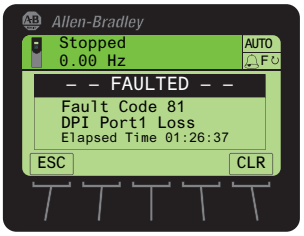

Fault Display Screen Soft Keys

Label	Name	Function
ESC	Escape	Reverts back to the previous screen without clearing the fault.
CLR	Clear	Removes the pop-up Fault Display screen from the display and clears the fault.

Fault Display Screen Single Function Key

Key	Name	Function
	Stop	Removes the pop-up Fault Display screen from the display, clears the fault, and sends a STOP command to the Host drive.

Using the HIM

This chapter provides information about using the HIM.

Topic	Page
Initial HIM Operation on New Drive Powerup	31
Selecting Display Contrast	32
Setting the Date/Time for PowerFlex 750-Series Drives	33
Creating a User-Defined Drive/Peripheral Name	35
Customizing the Process Screen	36
Resetting the Drive/Peripherals	38
Setting Factory Defaults	38
Setting Display Flashing for Fault Indication	40
Setting Display Flashing for Alarm Indication	41
Viewing/Editing Drive or Peripheral Parameters	42
Viewing/Clearing Drive Faults or Alarms	44
Viewing Peripheral Diagnostic Items	45
Viewing/Clearing Peripheral Events	46
Checking Drive and Peripheral Firmware Revisions	47
Using the CopyCat Function	48
Changing PowerFlex 750-Series Drive Parameter Associations	52
Linking Parameters in PowerFlex 700/700S Drives	55
Using a Password	57
Initiating PowerFlex 750-Series Drive Port Verification	60
Changing Language for the Display Text	62
Updating the HIM Firmware or Language	63

For a list of parameters, see Appendix B, HIM Parameters.

Initial HIM Operation on New Drive Powerup

When powering up a new drive for the first time, the HIM runs through an initial operating routine that does the following:

- Prompts you to select a language.
- Initiates a drive start-up routine.
- Initiates a port verification check (only for PowerFlex 750-Series drives). If a port conflict is detected, see page 60 for information to resolve it.

Selecting Display Contrast

The contrast of the HIM display can be adjusted for optimal viewing. Follow these steps to change the contrast.

1. Access the Status screen, which is displayed on HIM power up.

Figure 6 - Status Screen

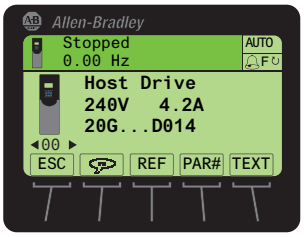

2. Use the 4 or 6 key to scroll to the port to which the HIM is connected.

Port	Location
01	HIM cradle on the front of the drive.
02	DPI port near the bottom of the drive control pod (PowerFlex 750-Series drives) or at the bottom of the drive (PowerFlex 7-Class drives).
03	Splitter cable port when the cable is plugged into the DPI port near the bottom of the drive control pod (PowerFlex 750-Series drives) or at the bottom of the drive (PowerFlex 7-Class drives).

3. Press the key to display its last-viewed folder.
4. Use the 4 or 6 key to scroll to the PROPERTIES folder.
5. Use the 2 or 8 key to select **Adjust Contrast**.
6. Press the 5 (Enter) key to display the Set LCD Contrast edit pop-up box.
7. Use the ▲ or ▼ *soft key* to adjust contrast to the desired setting.
8. Press the ESC *soft key* to set the contrast and exit the screen.

Setting the Date/Time for PowerFlex 750-Series Drives

IMPORTANT The information in this section does not apply to PowerFlex 7-Class drives.

The PowerFlex 750-Series drive has a real-time clock which supports its time stamp feature for faults and alarms. This clock must be accurately set to provide meaningful time stamp data. Follow these steps to set the date and time.

1. Access the Status screen (see Figure 6).
2. If Port 00 (host drive) is not shown above the ESC *soft key*, use the 4 or 6 key to scroll to Port 00.
3. Press the folder key to display its last-viewed folder.
4. Use the 4 or 6 key to scroll to the PROPERTIES folder.
5. Use the 2 or 8 key to select **Set Date and Time**.
6. Press the 5 (Enter) key to display the Date/Time Set screen.

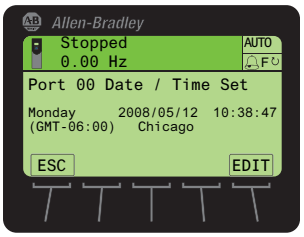

The top line shows the present date and time in this format:

yyyy/mm/dd hh:mm:ss

Note that the time is always displayed in a 24-hour format. For example, 6:00 pm is shown as 18:00:00.

7. Press the EDIT *soft key* to access the Date/Time Set Edit Mode screen, which highlights the present time zone line.

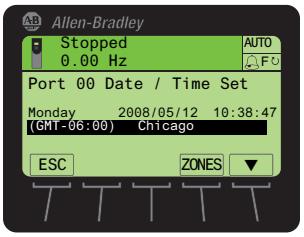

8. To select the time zone:
   a. Press the ZONES *soft key* to display the Select Time Zone screen.
   b. Use the 2 or 8 key to select your time zone region (for example, Americas).
   c. Press the 5 (Enter) key to enter your selection.
   d. Use the 2 or 8 key to select your specific time zone (for example, Chicago).

e. Press the 5 (Enter) key to enter your selected time zone.

9. To set the date:

a. Press the ▲ *soft key* to select the year in the top line.

b. Use the numeric keys to enter the correct year.

TIP To delete an erroneous date (or time) entry, use the ← *soft key*. Also, a partial or complete date (or time) value will not update until you press the ▶ *soft key* to advance to another field or press the ESC *soft key* to return to the previous screen.

c. Press the ▶ *soft key* to select the month in the top line.

d. Use the numeric keys to enter the correct month.

e. Press the ▶ *soft key* to select the day in the top line.

f. Use the numeric keys to enter the correct day.

10. To set the time:

a. Press the ▶ *soft key* to select the hour in the top line.

b. Use the numeric keys to enter the correct hour.

c. Press the ▶ *soft key* to select the minutes in the top line.

d. Use the numeric keys to enter the correct minute.

e. Press the ▶ *soft key* to select the seconds in the top line.

f. Use the numeric keys to enter the correct seconds.

11. Press the ESC *soft key* to return to the previous screen.

Creating a User-Defined Drive/Peripheral Name

The host drive and each of its connected peripherals has a default name. You can change any of these default names, but each new user-defined name cannot exceed 16 characters in length. Follow these steps to change a default name.

IMPORTANT Text editing is not supported when using Asian language characters. Only characters in the ISO 8859-1 Latin 1 Character Set, which is supported by U.S. and European personal computers, are available. If a software tool is used for text editing Asian characters, the HIM will replace all unsupported characters with a [] (narrow rectangle) mark.

1. Access the Status screen (see Figure 6).
2. Use the 4 or 6 key to scroll to the Port of the device whose name you want to change (for example, Port 00 for the host drive).
3. Press the TEXT *soft key* to display the Edit User Defined Text pop-up box.

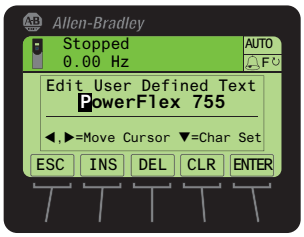

4. Use the 4 or 6 key to move the cursor to the desired character position in the displayed name.
5. Press the 2 key to access the last-viewed character set.
6. Press the appropriate numeric key to access the desired character set.

Numeric Key	Function
1	Selects the numeric character set.
3	Selects the symbols character set.
7	Selects the upper case letter character set.
9	Selects the lower case letter character set.

Also, use the appropriate *soft keys* to help create the new name.

Soft Key	Function
DEL	Deletes a highlighted character.
INS	Inserts a space to the left of a highlighted character.
CLR	Deletes an entire text string.

7. With the desired character selected in that character position, press the 5 key to select and enter the character.
8. Repeat steps 4 through 7 for each character position.
9. When the desired name is displayed on the edit pop-up box, press the ENTER *soft key* to enter and save the new name.

Customizing the Process Screen

The Process screen can be displayed as a multi-line or single-line view screen, and can be customized to show different drive monitoring items, apply a scale factor, or change text for the displayed drive parameter. These modifications are described in their respective subsections that follow.

Selecting Multi-Line or Single-Line View

By default, the Process screen shows a multi-line view of these drive monitoring items.

Drive Monitoring Item		Host PowerFlex Drive	
Screen Text	**Description**	**750-Series**	**7-Class**
Amps	Output Amps	✔	✔
Bus DC	DC Bus Volts	✔	✔
Out Vlts	Output Volts	✔	not applicable
Out Pwr	Output Power	✔	
Elp kWHr	Elapsed kWHr	✔	
Trq Cur	Torque Current	✔	

Figure 7 - Multi-Line View Process Screen

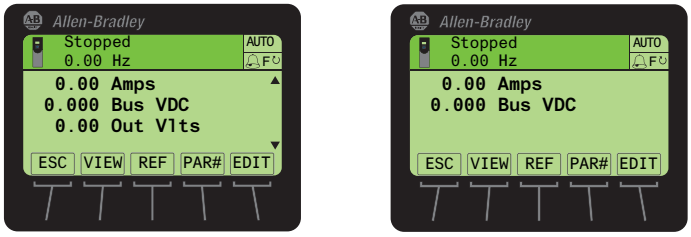

For PowerFlex 750-Series Drive

For PowerFlex 7-Class Drive

1. Press the ESC *soft key* until the Process screen appears.
2. For PowerFlex 750-Series drives only, use the or key to scroll to the hidden line items on the multi-line view screen.
3. To change the multi-line view Process screen to show each of the drive monitoring items in a larger single-line view, press the VIEW *soft key*.
4. Use the or key to scroll to each single-line view Process screen.

Figure 8 - Single-Line View Process Screen Examples

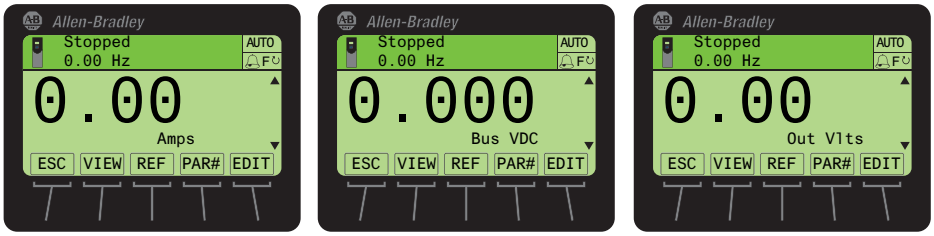

5. To return to the multi-line view Process screen, press the VIEW *soft key* again.

Changing Displayed Items, Adding a Scale Factor, or Customizing Text

You can further customize the Process screen by:

- Changing a displayed parameter to a different parameter.
- Applying a scale factor to the displayed parameter.
- Customizing text for the displayed parameter.

To do any or all of the above modifications, follow these steps.

1. With either the multi-line view Process screen (Figure 7) or the single-line view Process screen (Figure 8) displayed, use the or key to select the drive monitoring item you want to change.
2. Press the EDIT *soft key*.

   For example, suppose you want to change the first drive monitoring item. In this case, the Process Display 1 Edit screen is shown.

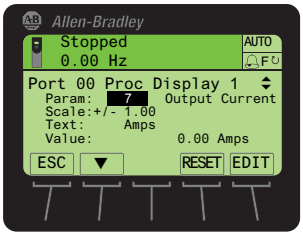

3. Use the ▼ *soft key* to select what you want to change (parameter, scale, or text) for the drive monitoring item.
4. Press the EDIT *soft key* to display its respective edit pop-up box (see examples below).

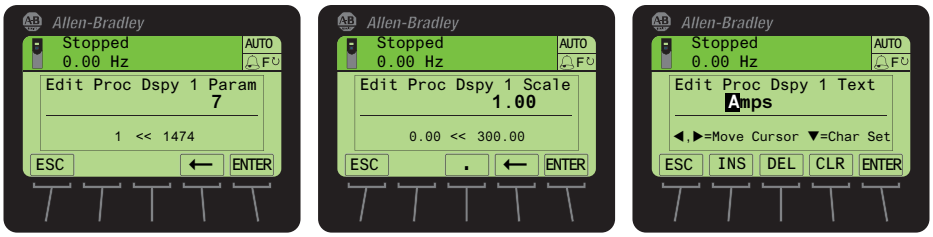

5. For parameter or scale editing, use the numeric keys and available *soft keys*, and press the ENTER *soft key* to enter and save the item.

   For text editing, use the numeric keys, available *soft keys*, and the key to enter each character. Then press the ENTER *soft key* to enter and save the complete text string.

Resetting the Drive/ Peripherals

The drive or any of its connected peripherals can be reset by removing and restoring power to the drive (power cycling). If this is not convenient or cannot be done because of application circumstances, the HIM can be used to reset the drive/peripherals. Follow these steps to reset the drive or any of its peripherals.

1. Access the Status screen (see Figure 6).
2. Use the 4 or 6 key to scroll to the Port of the device you want to reset (for example, Port 00 for the host drive).
3. Press the key to display its last-viewed folder.
4. Use the 4 or 6 key to scroll to the DIAGNOSTIC folder.
5. Use the 2 or 8 key to select **Reset Device**.
6. Press the 5 (Enter) key to display a pop-up box asking if you want to reset the device.
7. Press the ENTER *soft key* to affirm and reset the device, or press the ESC *soft key* to cancel.

Setting Factory Defaults

The procedure to set a PowerFlex 750-Series drive and its connected peripherals to factory defaults is slightly different than the procedure used for a PowerFlex 7-Class drive and its peripherals. See the respective subsection for instructions.

Setting PowerFlex 750-Series Drives/Peripherals to Factory Defaults

1. Access the Status screen (see Figure 6).
2. Use the 4 or 6 key to scroll to the Port of the device whose parameters you want to set to factory defaults (for example, Port 00 for the host drive or the respective port number for one of the drive's connected peripherals).
3. Press the key to display its last-viewed folder.
4. Use the 4 or 6 key to scroll to the MEMORY folder.
5. Use the 2 or 8 key to select **Set Defaults**.
6. Press the 5 (Enter) key to display the Set Defaults pop-up box (see examples below).

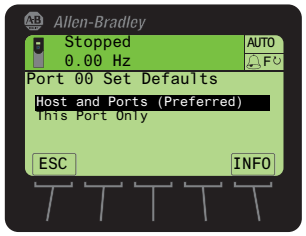

For Host Drive

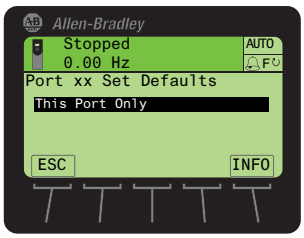

For Connected Peripheral

7. Use the 2 or 8 key to select the appropriate action.
   - **Host and Ports (Preferred):** Selects the host device and all ports for a factory default action.
   - **This Port Only:** Selects only this port for a factory default action.

   TIP For a description of a selected menu item, press the INFO *soft key*.

8. Press the 5 (Enter) key to display the warning pop-up box to reset defaults.

Figure 9 - 'Host and Ports (Preferred)' Pop-Up Box

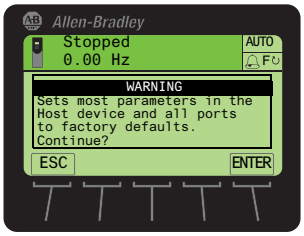

Press the ENTER *soft key* to affirm and set most parameters for the host drive and port devices to factory defaults. In this case, see the host drive and port device documentation for the settings that will **not** be restored—or press the ESC *soft key* to cancel.

Figure 10 - 'This Port Only' Pop-Up Box

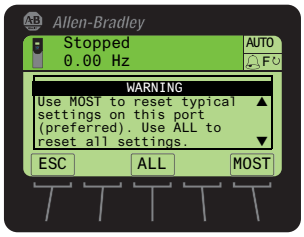

Press the MOST *soft key* to set **most** settings for the selected port device to factory defaults. In this case, see the host drive documentation for the settings that will **not** be restored. Press the ALL *soft key* to set **all** settings for the selected port device to factory defaults—or press the ESC *soft key* to cancel.

Setting PowerFlex 7-Class Drives/Peripherals to Factory Defaults

1. Access the Status screen (see Figure 6).
2. Use the 4 or 6 key to scroll to the Port of the device whose parameters you want to set to factory defaults (for example, Port 00 for the host drive or the respective port number for one of the drive's connected peripherals).
3. Press the folder key to display its last-viewed folder.
4. Use the 4 or 6 key to scroll to the MEMORY folder.
5. Use the 2 or 8 key to select **Set Defaults**.
6. Press the 5 (Enter) key to display the Set Defaults pop-up box.

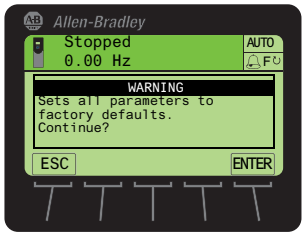

7. Press the ENTER *soft key* to affirm and set all device parameter values to factory defaults—or press the ESC *soft key* to cancel.

Setting Display Flashing for Fault Indication

Whenever a fault for the host drive or any of its connected peripherals is detected, a pop-up Fault Display screen (see page 30) appears. By default, only the Status Bar flashes to alert the operator. However, you can change the flash mode for the Fault Display screen to one of the following modes:

- Flash Bklite; selects the entire LCD screen to flash.
- Flash Status (default); selects only the Status Bar (item 1, Figure 3) to flash.
- Flash None; selects no flashing for the Fault Display screen.

Follow these steps to change the flash mode for the Fault Display screen.

1. Access HIM **Parameter 04 - [Fault Dspy Type]** using either the Direct Parameter Access method (page 42) or Alternate Linear List method (page 43).
2. Press the EDIT *soft key* to display the Edit Fault Dspy Type pop-up box.

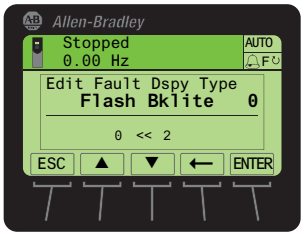

3. Use the ▲ and ▼ *soft keys* to select the desired flash mode. To delete an erroneous entry, use the ← *soft key*.
4. Press the ENTER *soft key* to enter your selection and return to the parameter screen.

Setting Display Flashing for Alarm Indication

Whenever an alarm for the Host Drive is detected, an alarm bell icon appears in the Status Bar. By default, only the Status Bar flashes to alert the operator. However, you can change the flash mode for alarm indication to one of the following modes:

- Flash Bklite; selects the entire LCD screen to flash.
- Flash Status (default); selects only the Status Bar (item 1, Figure 3) to flash.
- Flash None; selects no flashing for alarm indication.

Follow these steps to change the flash mode for alarm indication.

1. Access HIM **Parameter 05 - [Alarm Dspy Type]** using either the Direct Parameter Access method (page 42) or Alternate Linear List method (page 43).
2. Press the EDIT *soft key* to display the Edit Alarm Dspy Type pop-up box.

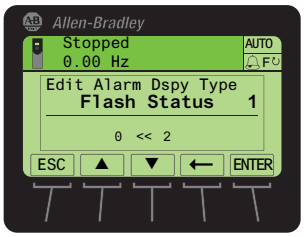

3. Use the ▲ and ▼ *soft keys* to select the desired flash mode.

   To delete an incorrect entry, use the ← *soft key*.
4. Press the ENTER *soft key* to enter your selection and return to the parameter screen.

Viewing/Editing Drive or Peripheral Parameters

The PowerFlex 20-HIM-A6 or 20-HIM-C6S HIM can show host drive parameters in a File-Group-Parameter view or by Linear List. To access drive or peripheral parameters for viewing or editing, use either the direct parameter access method or the alternate linear list access method. See the respective subsections that follow for instructions.

Selecting File-Group-Parameter or Linear List View

TIP Not all peripheral devices support viewing parameters in a File-Group-Parameter view.

Follow these steps to change viewing between File-Group-Parameter and Linear List.

1. Access the Status screen (see Figure 6).
2. Use the 4 or 6 key to scroll to the Port of the device whose parameters you want to access (for example, Port 00 for the host drive).
3. Press the key to display its last-viewed folder.
4. Use the 4 or 6 key to scroll to the DEV PARAM or HOST PARAM folder.
5. Use the 2 or 8 key to select **Linear List** or **File-Group**.
6. Press the 5 (Enter) key to display the last-viewed or first parameter in the Linear List, or the last-viewed or first parameter in the first Group.

Direct Parameter Access Method

1. Access the Status screen (see Figure 6).
2. Use the 4 or 6 key to scroll to the Port of the device whose parameters you want to access (for example, Port 00 for the host drive).
3. Press the PAR# *soft key* to display the Jump to Param # entry pop-up box.

   TIP Some devices have two sets of parameters (Device and Host parameters). In this case, a pop-up box will appear enabling you to first choose the parameter set in which the parameter that you want to access resides.

4. Use the numeric keys to enter the desired parameter number, or use the ▲ or ▼ *soft key* to scroll to the desired parameter number.

   TIP Pressing and holding the ▲ or ▼ *soft key* for 1 second or longer provides continuous scrolling until you release the key.

5. Press the ENTER *soft key* to display the parameter.

6. Press the EDIT *soft key* (for editable parameters only) to display the Edit Parameter pop-up box.

Figure 11 - Example Edit Parameter Pop-Up Box

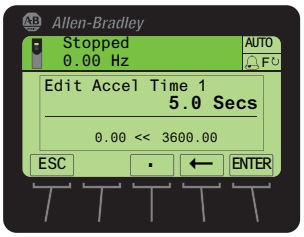

7. Use the numeric keys, decimal *soft key*, and ← *soft key* to edit the parameter.

TIP When the decimal *soft key* is pressed while editing a numeric value, this key temporarily changes to an EXP *soft key* to allow exponential entry.

8. Press the ENTER *soft key* to enter the new parameter value and return to the parameter screen.

Alternate Linear List Access Method

1. Access the Status screen (see Figure 6).
2. Use the 4 or 6 key to scroll to the Port of the device whose parameters you want to access (for example, Port 00 for the host drive).
3. Press the key to display its last-viewed folder.
4. Use the 4 or 6 key to scroll to the PARAMETER folder.
5. Use the 2 or 8 key to select **Linear List**.
6. Press the 5 (Enter) key to display either the device's last-viewed parameter or the first parameter in the linear list.
7. Use the 2 or 8 key to scroll to the desired parameter.
8. Press the EDIT *soft key* (for editable parameters only) to display the Edit Parameter pop-up box (Figure 11).
9. Use the numeric keys, decimal *soft key*, and ← *soft key* to edit the parameter.

TIP When the decimal *soft key* is pressed while editing a numeric value, this key temporarily changes to an EXP *soft key* to allow exponential entry.

10. Press the ENTER *soft key* to enter the new parameter value and return to the parameter screen.

Viewing/Clearing Drive Faults or Alarms

Follow these steps to view/clear drive faults or alarms.

1. Access the Status screen (see Figure 6).
2. If Port 00 (host drive) is not shown above the ESC *soft key*, use the 4 or 6 key to scroll to Port 00.
3. Press the folder key to display its last-viewed folder.
4. Use the 4 or 6 key to scroll to the DIAGNOSTIC folder.
5. Use the 2 or 8 key to select **Faults** or **Alarms**.
6. Press the 5 (Enter) key to display the numbered fault/alarm queue.

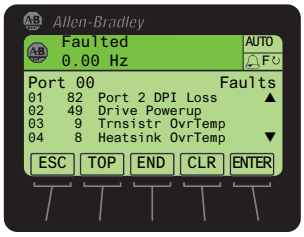

   Faults/alarms are listed from the most recent to occur (line 01) to the least recent. The fault/alarm number and name are shown at the right.

7. Use the 2 or 8 key or the following *soft keys* to navigate within the fault/alarm queue.

Soft Key	Function
ENTER	Displays the Time Stamp pop-up box for the fault/alarm. Note that the real-time clock in a PowerFlex 750-Series drive must be accurately set to provide meaningful time stamp data. For details, see Setting the Date/Time for PowerFlex 750-Series Drives on page 33. Use the 2 or 8 key to scroll to all parameters related to the displayed fault/alarm (if supported by device).
TOP	Displays the first (most recent) fault/alarm in the queue.
END	Displays the last (least recent) fault/alarm in the queue.

8. To clear faults/alarms, press the CLR *soft key*.

   In the Select Action pop-up box, select the appropriate action using the 2 or 8 key and press the 5 (Enter) key to clear the active fault/alarm or clear the fault/alarm queue. To cancel the pop-up box, press the ESC *soft key* or select **Cancel** from the list and press the 5 (Enter) key.

Viewing Peripheral Diagnostic Items

If you encounter unexpected communication problems, diagnostic items for the drive's connected peripherals—including the HIM—can help you or Rockwell Automation personnel troubleshoot the problem. Follow these steps to view peripheral diagnostic items.

1. Access the Status screen (see Figure 6).
2. Use the 4 or 6 key to scroll to the Port of the device whose diagnostic items you want to view (for example, Port 02 for the connected HIM).
3. Press the key to display its last-viewed folder.
4. Use the 4 or 6 key to scroll to the DIAGNOSTIC folder.
5. Use the 2 or 8 key to select **Diagnostic Items**.
6. Press the 5 (Enter) key to display either the device's last-viewed diagnostic item or the first diagnostic item in the list.

Table 1 shows all possible Diagnostic Items for the HIM. To view the HIM Diagnostic Items, use the procedure described above.

Table 1 - 20-HIM-A6 and 20-HIM-C6S HIM Diagnostic Items

No.	Name	Description
1	LCD Contrast	The present value of the HIM LCD contrast level, and ability to set the contrast level from this screen.
2	Common Logic Cmd	The present value of the Common Logic Command being transmitted to the drive by the HIM.
3	Prod Logic Cmd	The present value of the Product Specific Logic Command being transmitted to the drive by the HIM.
4	Common Logic Sts	The present value of the Common Logic Status being received from the drive by the HIM.
5	Prod Logic Sts	The present value of the Product Specific Logic Status being received from the drive by the HIM.
6	Reference	The present value of the Product Specific Reference being transmitted to the drive by the HIM.
7	Feedback	The present value of the Product Specific Feedback being received from the drive by the HIM.
8	Boot Flash Count	The present value of the Boot Flash Counter.
9	App Flash Count	The present value of the App Flash Counter.

Viewing/Clearing Peripheral Events

Events for the host drive's connected peripherals—including the HIM—are logged into their respective event queues. Many events in an event queue occur under normal operation. If you encounter unexpected problems, the events may help you or Allen-Bradley personnel troubleshoot the problem. Follow these step to view or clear the events of a connected peripheral.

1. Access the Status screen (see Figure 6).
2. Use the 4 or 6 key to scroll to the Port of the device whose events you want to view (for example, Port 06 for a network communication option module).
3. Press the key to display its last-viewed folder.
4. Use the 4 or 6 key to scroll to the DIAGNOSTIC folder.
5. Use the 2 or 8 key to select **Events**.
6. Press the 5 (Enter) key to display the device's numbered event queue.

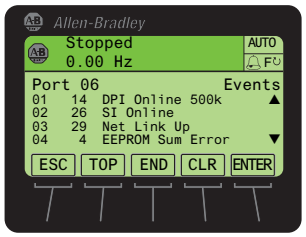

Events are listed from the most recent to occur (line 01) to the least recent. The event number and name are shown at the right.

7. Use the 2 or 8 key or the following *soft keys* to navigate within the event queue.

Soft Key	Function
ENTER	Displays the Time Stamp pop-up box for the event. Note that the real-time clock in a PowerFlex 750-Series drive must be accurately set to provide meaningful time stamp data. For details, see Setting the Date/Time for PowerFlex 750-Series Drives on page 33.
TOP	Displays the first (most recent) event in the queue.
END	Displays the last (least recent) event in the queue.

8. To clear events, press the CLR *soft key*.

   In the Select Action pop-up box, select the appropriate action using the 2 or 8 key and press the 5 (Enter) key to clear the event or clear event queue. To cancel the pop-up box, press the ESC *soft key* or select **Cancel** from the list and press the 5 (Enter) key.

The PowerFlex 20-HIM-A6 or 20-HIM-C6S HIM maintains an event queue that reports the history of its actions. Table 2 shows all possible events for the HIM. To view the HIM events, use the procedure described above.

Table 2 - 20-HIM-A6 and 20-HIM-C6S HIM Events

Code	Event	Description
1	Reserved	—
2	Device Power Up	A normal power up.
3	Device Reset	The HIM was reset due to a manual reset command or program crash.
4	EEPROM CRC Error	The HIM EEPROM Data Storage Device is corrupt.
5	App Updated	The HIM application firmware has been updated.
6	Boot Updated	The HIM boot firmware has been updated.
7	Watchdog Timeout	A program crash has occurred.
8	DPI Bus Off	A DPI Bus Off fault was detected.
9	DPI Ping Timeout	A DPI Ping Timeout fault was detected.
10	DPI Port Invalid	A DPI Port ID fault was detected.
11	DPI Port Changed	A DPI Port Changed fault was detected.
12	DPI Host Reset	The host has sent a reset message.
13	DPI Baud 125K	The DPI data rate is detected at 125K bits/second.
14	DPI Baud 500K	The DPI data rate is detected at 500K bits/second.
15	DPI Host Invalid	The HIM will not connect to this type of host.
16	DPI Dup Port	Another DPI device is already connected to this port.
17	DPI Type 0 Logon	The DPI log on was completed successfully.
18	DPI Type 0 Time	A DPI Type 0 Command has timed out.
19-23	Reserved	—
24	DPI Msg Timeout	A message to a DPI device has timed out.
25	DPI Manual Reset	A reset command was sent through a fault object.

Checking Drive and Peripheral Firmware Revisions

Follow these steps to check the firmware revision of the drive or its peripherals.

1. Access the Status screen (see Figure 6).
2. Use the 4 ◄ or ► 6 key to scroll to the Port of the device whose firmware version you want to view (for example, Port 00 for the host drive).
3. Press the folder key to display its last-viewed folder.
4. Use the 4 ◄ or ► 6 key to scroll to the DIAGNOSTIC folder.
5. Use the 2 ▼ or 8 ▲ key to select **Device Version**.
6. Press the 5 (Enter) key to display device version information.

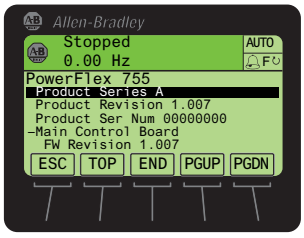

Using the CopyCat Function

PowerFlex 750-Series drives and PowerFlex 7-Class drives provide a CopyCat function that enables you to upload individual parameter sets for the host drive or any of its connected peripherals into the HIM. Furthermore, an Upload All Ports function enables you to conveniently upload multiple parameter sets for the host drive **and** all of its connected peripherals in one single file. In either case, this information can then be used as backup or can be transferred to another drive or peripheral device by downloading the file from the HIM's memory.

TIP The Upload All Ports and Download All Ports functions are only available for the host drive (Port 00) due to their unique functionality.

The CopyCat function also enables you to rename or delete individual or multiple parameter sets stored in the HIM.

The HIM can store up to 50 individual parameter sets or up to 5 multiple parameter sets. Due to the memory capacity of the HIM, these maximums will vary when storing combinations of individual and multiple parameter sets.

Generally, the upload or download transfer process manages all conflicts. However, the download will stop and a text message will appear if any of the following conditions exist:

- A device mismatch, such as firmware revision, device type, or device series is detected.
- The drive is password protected.
- The drive is running.

You then have the option to completely stop the download or continue after noting the discrepancy for the parameters that could not be downloaded. These parameters can then be manually adjusted.

IMPORTANT When using the HIM with a PowerFlex 753 drive with firmware revision 1.05 or earlier, or a PowerFlex 755 drive with firmware revision 1.10 or earlier, the CopyCat function cannot upload/download DeviceLogix values for DLX Out xx and DLX In xx parameters and DeviceLogix program routines. Drives with a later firmware revision support this function, but the HIM does **not** support screen formatting for the DeviceLogix program.

Creating CopyCat Files

1. Access the Status screen (see Figure 6).
2. Use the 4 or 6 key to scroll to the Port of the device whose parameter set you want to copy (for example, Port 00 for the host drive).
3. Press the key to display its last-viewed folder.
4. Use the 4 or 6 key to scroll to the MEMORY folder.
5. Use the 2 or 8 key to select **HIM CopyCat**.

6. Press the 5 (Enter) key to display the CopyCat Files selection screen.

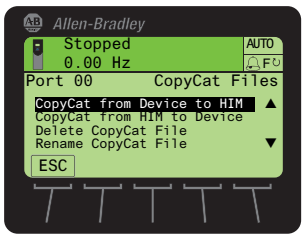

TIP Before any CopyCat files are created, only the 'CopyCat From Device to HIM' menu item is shown. When Port 00 for the Host Drive is selected in Step 2, the 'Upload All Ports' menu item also appears.

7. Use the 2 or 8 key to select the appropriate action and press the 5 (Enter) key to initiate that action.

8. With New File selected on the Select Upload File screen, press the 5 (Enter) key to create the file. A pop-up box will appear to confirm that the CopyCat file was successfully created. Press the ENTER *soft key* to complete the procedure.

TIP When a CopyCat file is created, its default file name corresponds to the device whose file is being copied. For example, a newly created CopyCat file for a PowerFlex 755 drive has a default file name of 'PowerFlex 755'.

When selecting an item row that is an existing CopyCat file—not a 'New File' row—to create a new CopyCat file, an Overwrite pop-up box will appear. Press the ENTER *soft key* to affirm and overwrite the existing CopyCat file—or press the ESC *soft key* to cancel.

Renaming CopyCat Files

IMPORTANT Text editing is not supported when using Asian language characters. Only characters in the ISO 8859-1 Latin 1 Character Set, which is supported by U.S. and European personal computers, are available. If a software tool is used for text editing Asian characters, the HIM will replace all unsupported characters with a [] (narrow rectangle) mark.

1. Access the Status screen (see Figure 6).
2. Use the 4 or 6 key to scroll to the Port of the device whose CopyCat file you want to rename (for example, Port 00 for the host drive).
3. Press the folder key to display its last-viewed folder.
4. Use the 4 or 6 key to scroll to the MEMORY folder.
5. Use the 2 or 8 key to select **HIM CopyCat**.

6. Press the 5 (Enter) key to display the CopyCat Files selection screen.

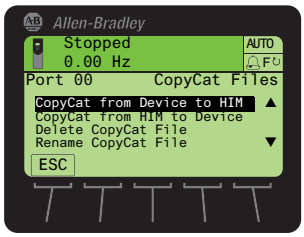

7. Use the 2 or 8 key to select **Rename CopyCat File**.
8. Press the 5 (Enter) key to display the Select File To Rename pop-up box.
9. Use the 2 or 8 key to select the file to be renamed.
10. Press the 5 (Enter) key to display the Edit CopyCat File Text pop-up box.

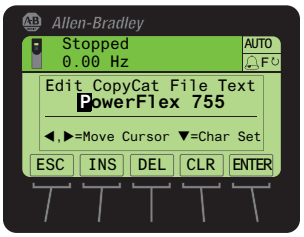

11. Use the 4 or 6 key to move the cursor to the desired character position in the displayed name.
12. Press the 2 key to access the last-viewed character set.
13. Press the appropriate numeric key to access the desired character set.

Numeric Key	Function
1	Selects the numeric character set.
3	Selects the symbols character set.
7	Selects the upper case letter character set.
9	Selects the lower case letter character set.

Also, use the appropriate *soft keys* to help create the new name.

Soft Key	Function
DEL	Deletes a highlighted character.
INS	Inserts a space to the left of a highlighted character.
CLR	Deletes an entire text string.

14. With the desired character selected in that character position, press the 5 key to select and enter the character.
15. Repeat steps 11 through 14 for each character position.
16. When the desired name is displayed on the edit pop-up box, press the ENTER *soft key* to enter and save the new name.

Deleting CopyCat Files

1. Access the Status screen (see Figure 6).
2. Use the 4 or 6 key to scroll to the Port of the device whose parameter set you want to delete (for example, Port 00 for the host drive).
3. Press the key to display its last-viewed folder.
4. Use the 4 or 6 key to scroll to the MEMORY folder.
5. Use the 2 or 8 key to select **HIM CopyCat**.
6. Press the 5 (Enter) key to display the CopyCat Files selection screen.

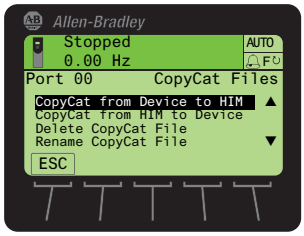

7. Use the 2 or 8 key to select **Delete CopyCat File**.
8. Press the 5 (Enter) key to display the Select File To Delete pop-up box.

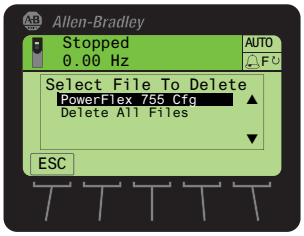

9. Use the 2 or 8 key to select the file (or all files) to delete.
10. Press the 5 (Enter) key to display the confirmation pop-up box.
11. Press the ENTER *soft key* to affirm and delete the selected CopyCat file, or press the ESC *soft key* to cancel.

    Another pop-up box will appear to confirm that the CopyCat file was successfully deleted.
12. Press the ENTER *soft key* to affirm and complete the procedure.

Changing PowerFlex 750-Series Drive Parameter Associations

PowerFlex 750-Series drives have special parameters (indirect selector parameters and reference parameters) which are always associated with other parameters. The values for these special parameters are actually pointers to other parameters in the drive or to *Host* parameters in connected peripherals. To change a parameter association, first access the indirect selector or reference parameter. Second, select the port number of the device whose parameter you want to target for association. Then, select the target parameter of that device. If the target parameter is a bit parameter, you must also select the appropriate bit you want to associate with the indirect selector or reference parameter.

Parameter associations can be changed using one of these methods:

- Individual Screen Entry Method—where individual pop-up screens are used to enter the required parameter association data.
- Direct Numeric Entry Method—where the required parameter association data is entered as a number string on a single pop-up screen.

The following example illustrates how to use each method to change a parameter association. Suppose you want the drive speed reference to come from the network controller via the embedded EtherNet/IP adapter on the Main Control Board in a PowerFlex 755 drive.

Using Individual Screen Entry Method

1. Access the indirect selector or reference parameter whose association you want to change (for this example, drive Parameter 545 - [Spd Ref A Sel] as shown below).

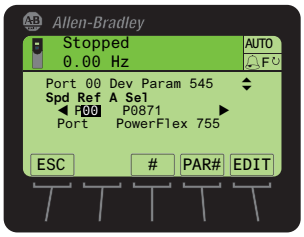

   In this example, the Port field is shown selected. Use the 4 ◀ or ▶ 6 key to select the Port, Parameter, or Bit (if applicable) fields.

   TIP Depending on the indirect selector or reference parameter selected, you may see more available ports in the list.

2. Press the EDIT *soft key* to display the edit pop-up box for the selected field (in this case, the port number field).

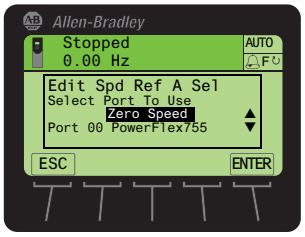

3. Use the 2 or 8 key to scroll to the port number of the device whose parameter you want to target for the association (for this example, Port 00, where the speed Reference parameters for the available drive ports are located).

TIP The 'Zero Speed' setting may be available to select for specific applications that require a safe-state speed Reference.

4. Press the ENTER *soft key* to enter the selected port number.

   The target parameter selection pop-up box appears (see example screen below), showing a list of available target parameters that can be associated.

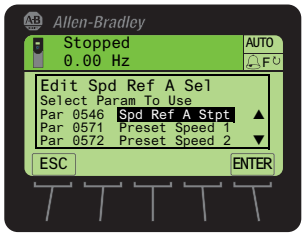

5. Use the 2 or 8 key to scroll to the target parameter you want to associate.

   For this example, we selected drive Parameter 877 - [Port 13 Reference]).

6. Press the ENTER *soft key* to enter the selected target parameter.

   If the target parameter:

   - **Is not a bit parameter**, the parameter association is now changed and the indirect selector or reference parameter screen re-appears with the associated parameter information shown.

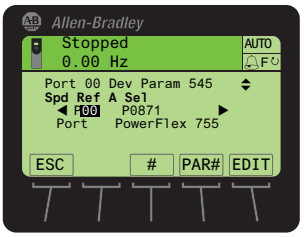

   - **Is a bit parameter**, a list of available bit numbers is displayed. Use the 2 or 8 key to scroll to the bit number of the target parameter you want to associate, and press the ENTER *soft key*. The parameter

association is now changed and the indirect selector or reference parameter screen re-appears with the associated parameter information shown.

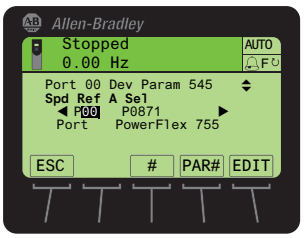

Using Direct Numeric Entry Method

1. Access the indirect selector or reference parameter whose association you want to change (for this example, drive Parameter 545 - [Spd Ref A Sel] as shown below).

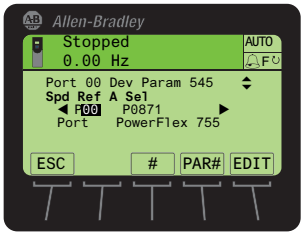

2. With any field (port, parameter, or bit) selected, press the # *soft key* to display the Direct Numeric Entry pop-up box.

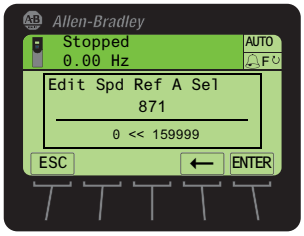

3. Use the numeric keys to enter a number string that represents the target parameter's device port number, parameter number and, only when the target parameter is a bit parameter, its bit number.

   The number string format is PPpppp.bb, where:

   PP = device port number
   pppp = target parameter number
   bb = bit number (only used when target parameter is a bit parameter)

4. Press the ENTER *soft key* to enter the number string and complete the parameter association.

   The indirect selector or reference parameter screen re-appears with the associated parameter information.

Linking Parameters in PowerFlex 700/700S Drives

Most parameter values are entered directly by the user. However, specific parameters can be 'linked', so the value of one parameter becomes the value of another. For example, the value of an analog input can be linked to an acceleration time. Rather than entering an acceleration time directly (via the HIM), the link allows the value to change by varying the analog input signal. This can provide additional flexibility for advanced applications.

Each link has two components:

- Source parameter—sender of information
- Destination parameter—receiver of information

Most parameters can be a source of data for a link, except parameters that use an integer value representing an ENUM (text selection). These are not allowed, since the integer is not actual data (it represents a value). See the drive documentation for a list of parameters that can be destinations. All links must be established between equal data types (parameter value formatted in floating point can only source data to a destination parameter value that is also a floating point).

Establishing a Link

1. Access a valid destination parameter to be linked (for example, the Accel Time 1 parameter 140 for a PowerFlex 700 drive or parameter 32 for a PowerFlex 700S drive).
2. Press the LINK *soft key* to display the Link pop-up box for that parameter.

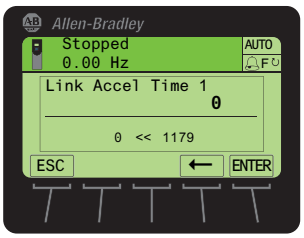

3. Enter the source parameter number (for example, the Analog In1 Value parameter 16 for a PowerFlex 700 drive or parameter 801 for a PowerFlex 700S drive) to which you want to link the destination parameter.
4. Press the ENTER *soft key*.

   The destination parameter screen reappears with the respective source parameter value now mapped over the destination parameter range, and is shown in destination parameter units. In this example, the value for Analog Input 1 is 10.000 volts for a PowerFlex 700 drive, and is shown as 10.0 seconds.

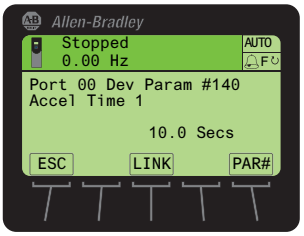

Deleting an Established Link

Follow these steps to delete an established link.

1. Access the screen for the destination parameter.
2. Press the LINK *soft key*.
3. In the Link pop-up box, enter a value of zero.
4. Press the ENTER *soft key* to delete the established link.

Using a Password

All parameter configuration settings for the drive and its connected peripherals can be protected from unauthorized access using a password.

Setting/Changing the Password

1. Access the Status screen (see Figure 6).
2. If Port 00 (host drive) is not shown above the ESC *soft key*, use the 4 or 6 key to scroll to Port 00.
3. Press the folder key to display its last-viewed folder.
4. Use the 4 or 6 key to scroll to the PROPERTIES folder.
5. Use the 2 or 8 key to select **Change Password**.
6. Press the 5 (Enter) key to display the Enter New Password pop-up box.

7. Use the numeric keys to enter a desired password value.

   Use the ← *soft key* to delete an erroneous entry.

   For your convenience, write down your assigned password and store it in a safe place.

   Password = ____ ____ ____ ____ ____

8. Press the ENTER *soft key* to enter the new password.
9. After the password verification screen appears, confirm the new password by re-entering its value.

   Thereafter, the HIM immediately logs in to the drive, which is indicated by the **Log Out** menu line in the PROPERTIES folder. All drive/peripheral parameters are accessible to view or edit.
10. To initiate password protection, do the following:
    a. Use the 2 or 8 key to select **Log Out** from the PROPERTIES folder menu.
    b. Press the 5 (Enter) key to display the log out verification pop-up box.
    c. Press the ENTER *soft key* to affirm and log out—or press the ESC *soft key* to cancel.

Changing Password-protected Drive/Peripheral Parameters

When the host drive is password protected, parameter settings for the drive and its connected peripherals can be viewed—but not changed until after the correct password value is entered.

When attempting to edit a parameter value while logged out, the HIM will prompt you for the password before allowing access.

Password protection also applies to:

- Drive start-up procedure
- Factory defaults
- User sets
- CopyCat function

Follow these steps to edit password-protected parameters.

1. Access the Status screen (see Figure 6).
2. If Port 00 (host drive) is not shown above the ESC *soft key*, use the 4 or 6 key to scroll to Port 00.
3. Press the folder key to display its last-viewed folder.
4. Use the 4 or 6 key to scroll to the PROPERTIES folder.
5. Use the 2 or 8 key to select **Log In**.
6. Press the 5 (Enter) key to display the Enter Password pop-up box.

7. Use the numeric keys to enter the existing password value.

   Use the ← *soft key* to delete an erroneous entry.
8. Press the ENTER *soft key* to enter the existing password.

   Thereafter, any parameter setting can be changed.

Disabling Password Protection

1. Access the Status screen (see Figure 6).
2. If Port 00 (host drive) is not shown above the ESC *soft key*, use the 4 or 6 key to scroll to Port 00.
3. Press the folder key to display its last-viewed folder.
4. Use the 4 or 6 key to scroll to the PROPERTIES folder.
5. Use the 2 or 8 key to select **Log In**.
6. Press the 5 (Enter) key to display the Enter Password pop-up box.

7. Use the numeric keys to enter the existing password value.

   Use the ← *soft key* to delete an erroneous entry.
8. Press the ENTER *soft key* to enter the existing password.
9. Use the 2 or 8 key to select **Change Password**.
10. Press the 5 (Enter) key to display the Enter New Password pop-up box.

11. Use the numeric keys and the ← *soft key* to enter '0', the default value to disable the password protection feature.
12. Press the ENTER *soft key* to enter the '0' (disable) default value.
13. After the password protection verification pop-up box appears, confirm the new password by re-entering '0'.
14. Press the ENTER soft key to disable password protection.

Initiating PowerFlex 750-Series Drive Port Verification

IMPORTANT The information in this section does not apply to PowerFlex 7-Class drives.

Upon powerup, the HIM verifies that the PowerFlex 750-Series drive has initiated Port Verification. The host drive then checks for port conflicts. If any conflicts are present, a Device Conflicts pop-up box appears listing all devices with conflicts.

Conflict Types

If the conflict can be resolved, a '!' symbol precedes the port number. If the conflict cannot be resolved without removing or replacing the device, an 'X' symbol precedes the port number. There are five possible conflict types.

Symbol	Conflict Type
!	Changed
!	Requires Configuration
X	Not Functioning
X	Not Supported
X	Invalid Duplicate

In the Device Conflicts pop-up box, scroll up or down to highlight/select an individual device row and press the INFO *soft key*. Another pop-up box appears for the selected device showing the type of conflict and related information.

If information is available for the device that previously occupied that port, it will also be shown.

Use the FIX *soft key*—displayed only if all conflict types are 'Changed' or 'Requires Configuration'—to resolve conflicts. After pressing the FIX *soft key*, a pop-up box will appear asking to confirm that the new device(s) should be accepted. Press the ENTER *soft key* to affirm and resolve the conflicts for all devices. Thereafter, the HIM will re-read the drive Port Verification information to ensure that no further conflicts exist.

IMPORTANT Please note the following important conflict resolution information:

- The Device Conflict pop-up window remains on the screen until all conflicts are resolved.
- All conflicts must be resolved to access a Folder screen or Control screen. Only the (Stop) key and the assigned *soft keys* (INFO and FIX) will be functional until no conflicts exist.
- The host drive will not be able to run while any conflicts are present.

Resolving 'Changed' or 'Requires Configuration' Conflicts

When a 'Changed' or 'Requires Configuration' conflict exists on powerup, a '!' symbol precedes the port number in the Device Conflicts pop-up box.

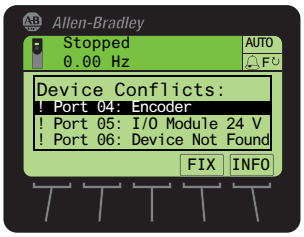

1. Select a port device (in this example, the Encoder card) and press either the INFO *soft key* to show additional information about the conflict, or press the FIX *soft key* to resolve all device conflicts.

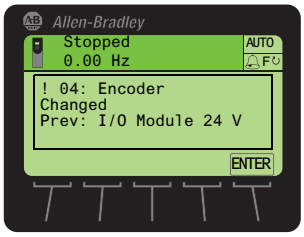

Example screen when the INFO *soft key* is pressed.

2. Press the ENTER *soft key* to affirm and re-display the Device Conflicts pop-up box.

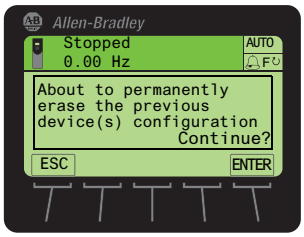

Example screen when the FIX *soft key* is pressed.

Press the ENTER *soft key* to affirm and resolve all device conflicts, or press the ESC *soft key* to cancel.

Resolving 'Not Functioning', 'Not Supported', or 'Invalid Duplicate' Conflicts

When a 'Not Functioning', 'Not Supported', or Invalid Duplicate' conflict exists on powerup, an 'X' symbol precedes the port number in the Device Conflicts pop-up box.

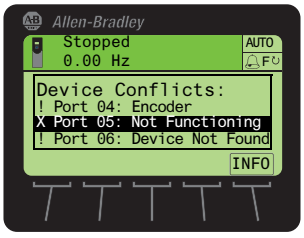

1. Select the port preceded with an 'X' (in this example, Port 05) and press the INFO *soft key* to show additional information about the conflict (see example below).

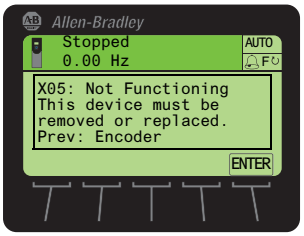

2. Follow the screen prompts to resolve the port conflict.

   Or press the ENTER *soft key* to affirm and re-display the Device Conflicts pop-up box.

Changing Language for the Display Text

All HIM screen text can be displayed in one of the supported languages. The default language is English.

TIP If the drive is set to a language not supported by the HIM, a pop-up box appears asking you to select another language.

Follow these steps to select another supported language.

1. Access the Status screen (see Figure 6).
2. Press the (Language) *soft key* to display the list of available languages.
3. Use the or key to select the desired language.
4. Press the (Enter) key to enter the selected language.

   All HIM screen text now appears in the selected language.

Updating the HIM Firmware or Language

The HIM firmware can be updated over the network or serially through a direct connection from the drive to the computer using a 1203-USB or 1203-SSS serial converter.

When updating firmware over the network, you can use the Allen-Bradley ControlFLASH software tool, the built-in update capability of DriveExplorer Lite or Full software, or the built-in update capability of DriveExecutive software.

When updating firmware through a direct serial connection from the drive to the computer, you can use the same Allen-Bradley software tools described above, or you can use HyperTerminal software set to the X-modem protocol.

To obtain a firmware or language update for the HIM, go to http://www.ab.com/support/abdrives/webupdate. This website contains all firmware update files, supported language files, and associated Release Notes that describe the following items:

- Firmware update enhancements and anomalies
- How to determine the existing firmware revision
- How to update the firmware using ControlFLASH, DriveExplorer, DriveExecutive, or HyperTerminal software

IMPORTANT When the HIM firmware is updated in the field to support another available language, the language selected for download will **replace** all other supported languages—except English, which always remains as the default language.

Notes:

Specifications

This appendix provides the specifications for the HIM.

Topic	Page
Communications	65
Electrical	65
Mechanical	65
Environmental	65
Regulatory Compliance	66

Communications

Protocol	Drive Peripheral Interface (DPI)
Data Rates	125 kbps or 500 kbps

Electrical

Consumption	140 mA at 12V DC supplied by the Host Drive

Mechanical

Dimensions	**20-HIM-A6**	**20-HIM-C6S**
Height	116.0 mm (4.57 in.)	180.0 mm (7.08 in.)
Width	70.0 mm (2.75 in.)	93.0 mm (3.66 in.)
Depth	16.0 mm (0.63 in.)	25.0 mm (0.98 in.)
Weight	91 g (3.2 oz.)	173 g (5.7 oz.)

Environmental

Temperature	
Operating	0…50 °C (32…122 °F)
Storage	-40…85 °C (-40…185 °F)
Relative Humidity	5…95% non-condensing
Atmosphere	**Important:** The HIM **must not** be installed in an area where the ambient atmosphere contains volatile or corrosive gas, vapors or dust. If the HIM is not going to be installed for a period of time, it must be stored in an area where it will not be exposed to a corrosive atmosphere.
Vibration	
Operating	2.5 g @ 5 Hz…2 kHz
Non-Operating	5 g @ 5 Hz…2 kHz
Shock	
Operating	30 g peak acceleration, 11 (±1) ms pulse width
Non-Operating	50 g peak acceleration, 11 (±1) ms pulse width

Regulatory Compliance

Certification	Specification
UL	UL508C
cUL	CAN / CSA C22.2 No. 14-M91
CE	EN50178 and EN61800-3
CTick	EN61800-3

NOTE: This is a product of category C2 according to IEC 61800-3. In a domestic environment this product may cause radio interference in which case supplementary mitigation measures may be required.

HIM Parameters

This appendix provides information about the HIM parameters.

Besides the HIM, the following configuration tools can also be used to monitor or change parameter values of the HIM, drive, and other connected peripherals:

- Connected Components Workbench software, version 1.02 or later
- DriveExplorer software, version 6.01 or later
- DriveExecutive software, version 5.01 or later

Parameter List

Parameter No.	Name and Description	Details	
01	**[Port Number]** Displays the port on the drive to which the HIM is connected.	Minimum: Maximum: Type:	1 7 Read Only
02	**[DPI Data Rate]** Displays the DPI data rate at which the HIM is communicating with the drive.	Values: Type:	0 = 125 kbps 1 = 500 kbps Read Only
03	**[Initial Screen]** Selects the initial HIM screen to be displayed on power up.	Default: Value: Type: Reset Required:	0 = Status Scrn 0 = Status Scrn 1 = Process Scrn Read/Write Yes
04	**[Fault Dspy Type]** Selects the type of display flash to be shown when a drive or peripheral fault is detected.	Default: Values: Type: Reset Required:	1 = Flash Status 0 = Flash Bklite 1 = Flash Status 2 = Flash None Read/Write No
05	**[Alarm Dspy Type]** Selects the type of display flash to be shown when a drive alarm is detected.	Default: Values: Type: Reset Required:	1 = Flash Status 0 = Flash Bklite 1 = Flash Status 2 = Flash None Read/Write No
06	**[User Dspy Enable]** Enables/disables the HIM's automatic user display time function, which is configured using **Parameter 07 - [User Dspy Time]**.	Default: Values: Type: Reset Required:	1 = Enable 0 = Disable 1 = Enable Read/Write Yes
07	**[User Dspy Time]** Sets the amount of time that a screen will remain displayed as long as the HIM keys are not used. After this time elapses, the screen is automatically replaced by the initial screen, which is selected using **Parameter 03 - [Initial Screen]**.	Default: Minimum: Maximum: Type: Reset Required:	60 sec 10 sec 300 sec Read/Write Yes

Notes:

History of Changes

Topic	Page
20HIM-UM001C-EN-P, January 2012	69
20HIM-UM001B-EN-P, October 2010	70
20HIM-UM001A-EN-P, January 2009	70

This appendix summarizes the revisions to this manual. Reference this appendix if you need information to determine what changes have been made across multiple revisions. This may be especially useful if you are deciding to upgrade your hardware or software based on information added with previous revisions of this manual.

20HIM-UM001C-EN-P, January 2012

This table contains the changes, which were the result of HIM firmware revision 2.001.

Topic
In Chapter 3: • Added the Status Bar element 'DLX' to indicate that the Host Drive DeviceLogix feature is enabled. • Added new *soft key* labels 'ACK', 'PGDN', and 'PGUP' on the Device Version information screen to enhance navigation.
In Chapter 4: • Changed the Fault Display screen flash mode default from 'Flash Bklite' to 'Flash Status'. • Added a TIP statement that holding the ▲ or ▼ soft key while using the Direct Parameter Access method to view/edit a parameter provides continuous scrolling until the key is released. • Revised Example Device Version Information Screen to show the added soft key labels 'Top', 'End', 'PGUP', and 'PGDN'.
In Appendix B, changed the default for Parameter 04 - [Fault Dspy Type] from '0' (Flash Bklite) to '1' (Flash Status).

20HIM-UM001B-EN-P, October 2010

Topic
In Chapter 2, added new subsection 'PowerFlex 750-Series IP54, NEMA/UL Type 12 Drives' with instructions to install the HIM.
In Chapter 3: • In the 'Single Function Keys' subsection, added footnote to the single function keys Folders and Controls explaining that these keys are temporarily inactive during drive Start Up. • In the 'Soft Key Labels' subsection, added new RESET soft key label to the table. • In the 'Folder Screens' subsection, added new Param Access Level menu item to the DEV PARAM folder screen.
In Chapter 4: • In the 'Setting the Date/Time for the Drive (only PowerFlex 750-Series Drives)' subsection, revised the Date/Time and Date/Time Set Edit Mode screens. • In the 'Changing Displayed Items, Adding a Scale Factor or Customizing Text' subsection, revised the Process Display 1 screen. • In the 'Direct Parameter Access' subsection, revised the Edit Parameter pop-up box, added a TIP to step 7. • In the 'Alternate Linear List' subsection, added a TIP to step 9. • In the 'Using the CopyCat Function' section, added an Important statement describing the limitations of the CopyCat feature with DeviceLogix functions in PowerFlex 750-Series drives. • In the 'Using Individual Screen Entry Method' subsection, revised Port Number Selection and Target Parameter Selection pop-up boxes.

20HIM-UM001A-EN-P, January 2009

Topic
This was the first release of this manual.

A

accessing parameters
- alternate linear list method 43
- direct parameter access method 42

adjusting display contrast 32
Alarm Dspy Type parameter 67
alarm/fault queues for the drive 44
attentions 12

C

changing PowerFlex 750-Series drive parameter associations 52
checking drive/peripheral firmware revisions 47
clearing
- drive faults/alarms 44
- peripheral events 46

compatible products 12
contrast adjustment for display 32
CopyCat function 48
creating user-defined drive/peripheral name 35
customizing the Process screen 36

D

date/time setting for PowerFlex 750-Series drives 33
diagnostic items for 20-HIM-A6/-C6S HIMs 45
dimensions 65
direct parameter access method 42
disabling password protection 59
display contrast adjustment 32
DPI Data Rate parameter 67
DPI data rates 65
drive fault/alarm queues 44
drive/peripheral firmware revisions - viewing 47

E

events for 20-HIM-A6/-C6S HIMs 47

F

factory defaults 38
Fault Dspy Type parameter 67
fault/alarm queues for the drive 44
features 11
firmware
- revision 9
- update guidelines 63

H

HIM (Human Interface Module)
- adjusting display contrast 32
- changing PowerFlex 750-Series drive parameter associations 52
- checking drive/peripheral firmware revisions 47
- compatible products 12
- CopyCat function 48
- creating user-defined drive/peripheral name 35
- customizing the Process screen 36
- diagnostic items 45
- events 47
- features 11
- firmware or language updating 63
- installing
  - 20-HIM-A6 HIM 14
  - 20-HIM-C6S HIM 18
- keypad key descriptions 21
- LCD display elements/descriptions 24
- linking parameters in PowerFlex 700/700S drives 55
- main screens/descriptions 26
- parameter list for HIM 67
- port verification (only PowerFlex 750-Series drives) 60
- removing 20
- resetting the drive/peripherals 38
- selecting language for display text 62
- setting date/time for PowerFlex 750-Series drives 33
- setting display flashing for
  - alarm indication 41
  - fault indication 40
- setting factory defaults 38
- specifications 65
- updating HIM firmware or language 63
- using a password 57
- viewing peripheral diagnostic items 45
- viewing/clearing
  - drive faults/alarms 44
  - peripheral events 46
- viewing/editing drive and peripheral parameters 42

I

Initial Screen parameter 67
installing
- 20-HIM-A6 HIM 14
- 20-HIM-C6S HIM 18

K

keypad key descriptions 21

L

language
- selecting for display text 62
- updating 63

LCD display elements/descriptions 24
linear list access method to parameters 43
linking parameters in PowerFlex 700/700S drives 55

M

main screens/descriptions 26
manual
conventions 9
related documentation 10
website 10

P

parameters
convention 9
list of 67
password protection
changing parameters 58
disabling 59
setting 57
peripheral diagnostic items - viewing 45
Port Number parameter 67
PowerFlex 750-Series drive port verification 60
products compatible with HIM 12

R

regulatory compliance 66
related documentation 10
removing the HIM 20
resetting the drive/peripherals 38
restoring the drive/peripherals to factory defaults 38

S

safety precautions 12
screens (main)/descriptions 26
selecting a language 62
setting
display flashing for alarm indication 41
display flashing for fault indication 40
factory defaults 38
password 57
specifications 65

T

technical support 9
time/date setting for PowerFlex 750-Series drives 33

U

updating HIM firmware or language 63
User Dspy Enable parameter 67
User Dspy Time parameter 67
using the CopyCat function 48

V

verification of ports for PowerFlex 750-Series drives 60
viewing peripheral diagnostic items 45
viewing/clearing
drive faults/alarms 44
peripheral events 46
viewing/editing drive and peripheral parameters 42

W

website for related documentation 10

Rockwell Automation Support

Rockwell Automation provides technical information on the Web to assist you in using its products. At http://www.rockwellautomation.com/support/, you can find technical manuals, a knowledge base of FAQs, technical and application notes, sample code and links to software service packs, and a MySupport feature that you can customize to make the best use of these tools.

For an additional level of technical phone support for installation, configuration, and troubleshooting, we offer TechConnect support programs. For more information, contact your local distributor or Rockwell Automation representative, or visit http://www.rockwellautomation.com/support/.

Installation Assistance

If you experience a problem within the first 24 hours of installation, review the information that is contained in this manual. You can contact Customer Support for initial help in getting your product up and running.

United States or Canada	1.440.646.3434
Outside United States or Canada	Use the Worldwide Locator at http://www.rockwellautomation.com/support/americas/phone_en.html, or contact your local Rockwell Automation representative.

New Product Satisfaction Return

Rockwell Automation tests all of its products to ensure that they are fully operational when shipped from the manufacturing facility. However, if your product is not functioning and needs to be returned, follow these procedures.

United States	Contact your distributor. You must provide a Customer Support case number (call the phone number above to obtain one) to your distributor to complete the return process.
Outside United States	Please contact your local Rockwell Automation representative for the return procedure.

Documentation Feedback

Your comments will help us serve your documentation needs better. If you have any suggestions on how to improve this document, complete this form, publication RA-DU002, available at http://www.rockwellautomation.com/literature/.

Rockwell Otomasyon Ticaret A.Ş., Kar Plaza İş Merkezi E Blok Kat:6 34752 İçerenköy, İstanbul, Tel: +90 (216) 5698400

www.rockwellautomation.com

Power, Control and Information Solutions Headquarters

Americas: Rockwell Automation, 1201 South Second Street, Milwaukee, WI 53204-2496 USA, Tel: (1) 414.382.2000, Fax: (1) 414.382.4444
Europe/Middle East/Africa: Rockwell Automation NV, Pegasus Park, De Kleetlaan 12a, 1831 Diegem, Belgium, Tel: (32) 2 663 0600, Fax: (32) 2 663 0640
Asia Pacific: Rockwell Automation, Level 14, Core F, Cyberport 3, 100 Cyberport Road, Hong Kong, Tel: (852) 2887 4788, Fax: (852) 2508 1846

Publication 20HIM-UM001D-EN-P - February 2013
Supersedes Publication 20HIM-UM001C-EN-P - January 2012

Copyright © 2013 Rockwell Automation, Inc. All rights reserved. Printed in the U.S.A.

Allen-Bradley

1321 Power Conditioning Products

Don't Ignore the Cost of Power Line Disturbance

Topic	Page
Product Overview	2
1321-3R and 3RA Series Line Reactors	3
1321 Reflective Wave Reduction (RWR) Devices	12
1321-3TH/3TW Series Three-Phase Isolation Transformers	16
1321-M Common Mode Chokes	21
1321-DC DC Link Chokes	24

Additional Resources

These documents contain additional information concerning related products from Rockwell Automation.

Resource	Description
Wiring and Grounding Guidelines for Pulse Width Modulated (PWM) AC Drives, publication DRIVES-IN001	Provides basic information needed to properly wire and ground PWM AC drives.
Safety Guidelines for the Application, Installation and Maintenance of Solid State Control, publication SGI-1.1	Provides general guidelines for the application, installation, and maintenance of solid-state control.

You can view or download publications at http://www.rockwellautomation.com/literature/. To order paper copies of technical documentation, contact your local Allen-Bradley distributor or Rockwell Automation sales representative.

For Allen-Bradley Drives Technical Support:

Title	Online at…
Allen-Bradley Drives Technical Support	www.ab.com/support/abdrives or call (1) 262.512.8176

Product Overview

Allen-Bradley reactors help keep equipment running longer by absorbing many of the power line disturbances which can shut down your drive. Allen-Bradley isolation transformers can provide both voltage change and isolation for your variable speed drive. These designs are harmonic compensated and IGBT protected to assure optimum performance in the presence of harmonics.

1321-3R and 3RA Series Line Reactors

Applying Allen-Bradley Line Reactors

At the Input of the Drive

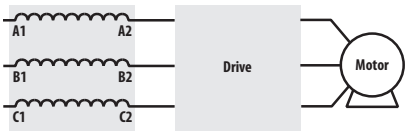

At the input of a drive, line reactors help protect against surges or spikes on the incoming power lines and help reduce harmonic distortion.

- Eliminate Nuisance Tripping
- Extend Semiconductor Life
- Reduce Harmonic Distortion
- Improve True Power Factor
- Reduce Voltage Notching
- Meet IEEE-519 or EN-61800

At the Output of the Drive

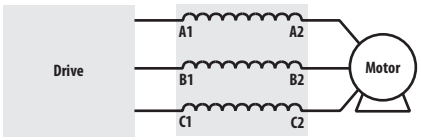

In long motor lead applications, Allen-Bradley load reactors located between the drive and motor help reduce dv/dt and motor terminal peak voltages. The use of a load reactor also helps protect the drive from surge currents caused by rapid changes in the load.

- Protect Motors from Long Lead Effects
- Reduce Output Voltage dv/dt
- Extend Semiconductor Life
- Reduce Surge Currents
- Reduce Motor Temperature
- Reduce Audible Motor Noise

With Multiple Drives

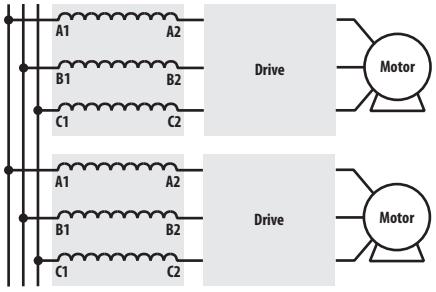

Multiple drives on a common power line should each have their own line reactor. Individual line reactors provide filtering between each drive to help reduce any crosstalk while providing optimum surge protection for each drive.

With Multiple Motors

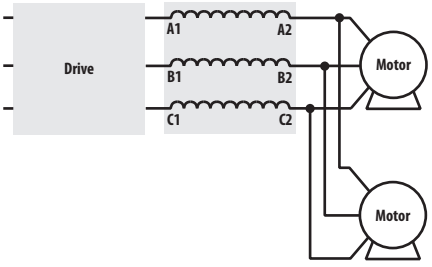

When more than one motor is controlled by a single drive, a single line reactor can typically be used between the drive and all the motors. Size the line reactor based on the total motor/load horsepower.

With Single-Phase Input

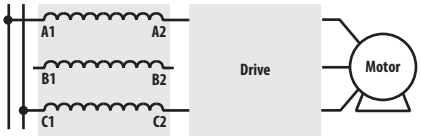

A three-phase reactor can be used for single-phase applications by routing each of the two input power conductors to the outside two coils, and leaving the center coil disconnected. The sum of the inductance of the two coils is the total inductance applied to the circuit. Contact Rockwell Automation Technical Support for assistance in specifying the proper reactor.

Selecting the Correct Impedance Rating

Why is the Right Impedance Rating Important?

Selecting the correct impedance rating is critical for your job. An impedance value too low may not limit peak current. Too high of an impedance may reduce input voltage. Allen-Bradley line reactors offer two impedance ratings.

3% Impedance Rated Reactors to Reduce Nuisance Trips

Allen-Bradley line reactors rated at 3% are typically sufficient to absorb line spikes and motor current surges and will help prevent nuisance tripping of drive and circuit breakers in most applications.

5% Impedance Rated Reactors to Reduce Harmonic Content

Allen-Bradley reactors rated at 5% are best for reducing harmonic current and frequencies. These line reactors help comply with IEEE-519 (not normally used as load reactors).

Voltage Spike Protection

Voltage spikes on AC power lines can cause elevation of the DC bus voltage which may cause the drive to trip on an overvoltage condition.

3% impedance reactors are very effective at protecting drives against voltage spikes and nuisance tripping. Allen-Bradley line reactors absorb these line spikes protecting the drive from nuisance tripping and damage.

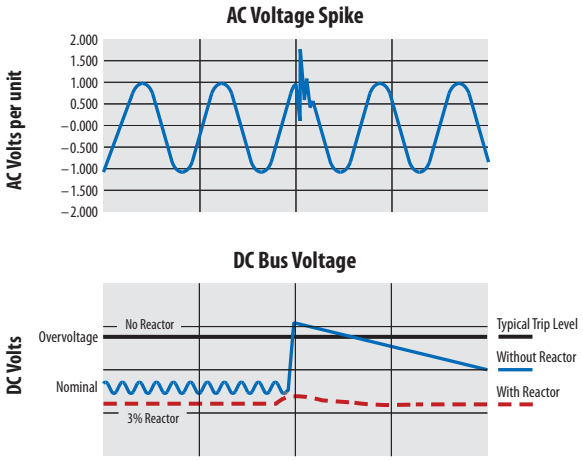

Motor Protection

Allen-Bradley load reactors can help protect motors from high peak voltages.

For IGBT drive applications with long drive-to-motor lead lengths, Allen-Bradley load reactors can help protect against fast dv/dt rise times.

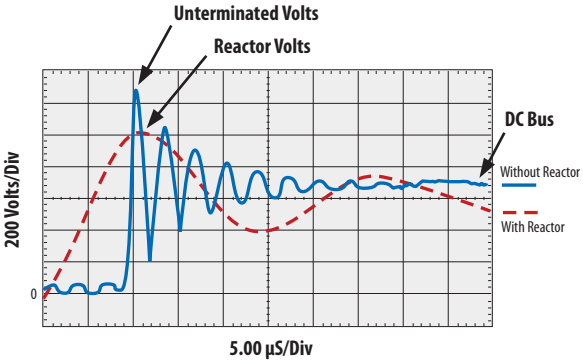

Catalog Number Explanation

Position Number

1-4		*6*	7	8		10
1321	–	3	R	4	–	B
a		*b*	*c*	*d*		*e*

a

Product	
Code	**Type**
1321	1321 Power Component

b

Phases	
Code	**Description**
3	Three-Phase

c

Device	
Code	**Description**
R	Reactor, Open
RA, RB	Reactor, NEMA 1
RAB	Reactor, NEMA 1, Cabinet Style 2 Only

d

Fundamental Amps	
Code	**Amps**
1	1
2	2
4	4
8	8
12	12
18	18
25	25
35	35
45	45
55	55
80	80
100	100
130	130
160	160
200	200
250	250
320	320
400	400
500	500
600	600
750	750
850	850
1000	1000

e

Inductance Rating	
Code	**Description**
A	Each reactor current rating has four inductance ratings also available. See the IP00 dimension table.
B	
C	
D	

Common Specifications

Specification		Rating
Material	Enclosures	IP11 (NEMA/UL Type 1) — Sheet steel in accordance with UL, NEMA requirements
		IP00 (Open) or IP20 (Open - with finger safe terminals)
	Terminations	1-45 Amp (fundamental) Ratings – Finger guard IP20 terminal block
		80-160 Amp (fundamental) Ratings – Solid copper box lugs
		200-400 Amp (fundamental) Ratings – Copper tab terminals
		401 Amps and Above – Copper tab terminals
Harmonic Compensation	All line reactors are compensated for the additional currents and high frequencies caused by the presence of harmonics	
General Protection	Impedance	3% or 5% based on the fundamental current ratings
	Overload Rating	200% of fundamental current for 30 minutes 300% of fundamental current for 1 minute
	dv/dt Protection	Meets NEMA MG-1, part 31
Electrical	Max. Rated Voltage	600V AC (units with terminal blocks) 690V AC (units with box lugs or tab terminals)
	Max. Switching Freq.	20 kHz
	Fundamental Frequency	Line/Load - 50/60 Hz
	Temperature Rise	135 degrees C average
	Dielectric Strength	3,000 Volts rms (4,243 volts peak)
	Inductance Curve (Typical)	100% at 100% current 100% at 150% current 50% at 350% current (minimum)
	Inductance Tolerance	±10%
	Insulation System	Class N (200 degrees C)
	Impregnation	High bond strength solventless epoxy, 200 degrees C, UL94HB recognized
Environmental	Ambient Temperature	45 degrees C (maximum)
	Altitude	1000 meters (3280 feet)
Agency Approvals	UL-508	File E180243 Component Listed (1-2400 amps) File E180243 UL Listed NEMA Type 1 units (1-2400 amps) Note: Short Circuit rating not required under Exception No.1 of UL508A SB4.2.1 effective 4/25/06
	CSA C22.2, Class N, 200 °C	File LR29753-13 CSA Certified (1 amp - 2400 amps) File E66214, Type 200-18, UL Recognized Insulation System
	CE	TUV certified to EN61558-2-20:2000

Termination

Allen-Bradley reactors rated 45 Amps (fundamental) and below are supplied with an integral mounted terminal block. Reactors rated from 55 to 160 Amps (fundamental) are supplied with box lugs. Reactors rated 200 to 400 Amps (fundamental) will be supplied with front facing copper tabs. Above 400 Amps (fundamental), side facing copper tabs are used. The "3R" and "3RA" designations for the 1321 line reactors indicate the following: 3R = Open Enclosure Line Reactor and 3RA = NEMA 1 Enclosure Line Reactor.

Typical Termination Types and Specifications

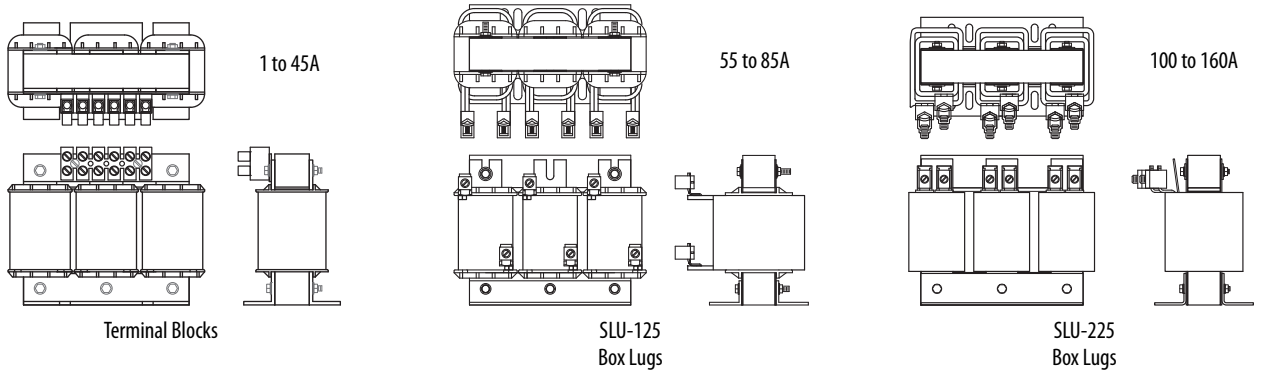

Reactor Catalog Number		Termination	Max./Min. Wire Size	Max. Torque
IP00 (Open) or IP20	IP11 (NEMA/UL Type 1)	Type	mm^2 (AWG)	Nm (lb.-in.)
1321-3R1-A to 1321-3R8-D	1321-3RA1-A to 1321-3RA8-D	20A Terminal Block	2.1/0.3 (14/22)	0.51 (4.5)
1321-3R12-A to 1321-3R35-B	1321-3RA12-A to 1321-3RA35-B	65A Terminal Block	16.0/0.3 (5/22)	1.81 (16)
1321-3R35-C to 1321-3R45-C	1321-3RA35-C to 1321-3RA45-C	85A Terminal Block	21.2/0.8 (4/18)	2.26 (20)
1321-3R55-A to 1321-3R80-C	1321-3RA55-A to 1321-3RA80-C	SLU-125 Box Lug	50.0/10.0 (0/6)	5.09 (45)
1321-3R100-A to 1321-3R160-C	1321-3RA100-A to 1321-3RA160-C	SLU-225 Box Lug	120.0-27.0 (0000/2)	16.95 (150)

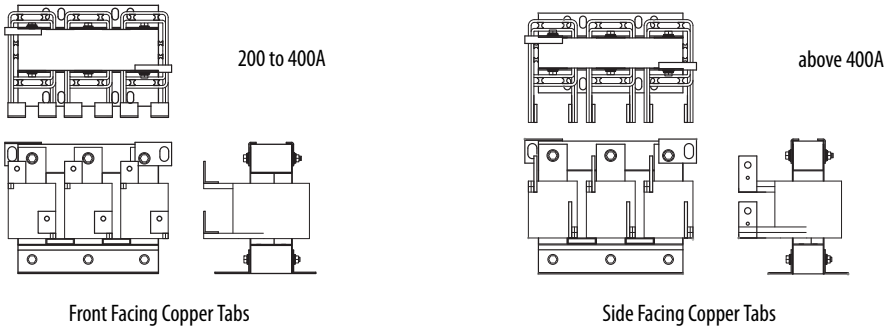

Reactor Catalog Number		Termination	Contact Surface (H x W)	Hole Diameter	Thickness
IP00 (Open) or IP20	IP11 (NEMA/UL Type 1)	Type	mm (in.)	mm (in.)	mm (in.)
1321-3R200-A to 1321-3R200-C	1321-3RA200-A to 1321-3RA200-C	Front Facing Copper Tab	41.3 x 25.4 (1.63 x 1.0)	10.36 (0.408)	3.18 (0.125)
1321-3R250-B to 1321-3RB250-C	1321-3RAB250-A to 1321-3RAB250-C	Front Facing Copper Tab	57.2 x 19.1 (2.25 x 0.75)	10.31 (0.406)	4.75 (0.187)
1321-3RB320-A to 1321-3R400-A	1321-3RAB320-A to 1321-3RA400-A	Front Facing Copper Tab	44.5 x 38.1 (1.75 x 1.5)	10.31 (0.406)	3.18 (0.125)
1321-3R500-A	1321-3RA500-A	Side Facing Copper Tab	44.5 x 38.1 (1.75 x 1.5)	10.31 (0.406)	3.18 (0.125)
1321-3R500-B to 1321-3R500-C	–	Front Facing Copper Tab	76.2 x 38.1 (3.00 x 1.5)	13.49 & 6.35 (0.531 & 0.25)	6.35 (0.25)
–	1321-3RA500-B	Side Facing Copper Tab	44.5 x 38.1 (1.75 x 1.5)	10.31 (0.406)	3.18 (0.125)

Mounting Dimensions and Weights

IMPORTANT The dimensions and weights provided on the following pages are for estimating purposes only. Conduit entry locations for floor mounted enclosures are the responsibility of the installer. Contact your Allen-Bradley Sales Office if certified drawings are required for planning and installation.

IP11 (NEMA/UL Type 1)

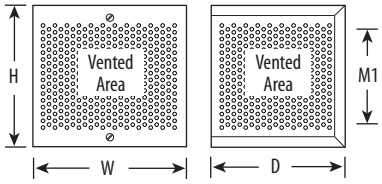

Cabinet 1 – Wall Mounted

Catalog Number 1321- …	Unit	Dimensions in mm (in.) and Weights in kg (lbs.)				
		H	W	D	M1	Weight (Cabinet Only)
3RA1-A to 3RA18-B	Cabinet 1	203 (8.0)	203 (8.0)	152 (6.0)	140 (5.5)	3.2 (7)

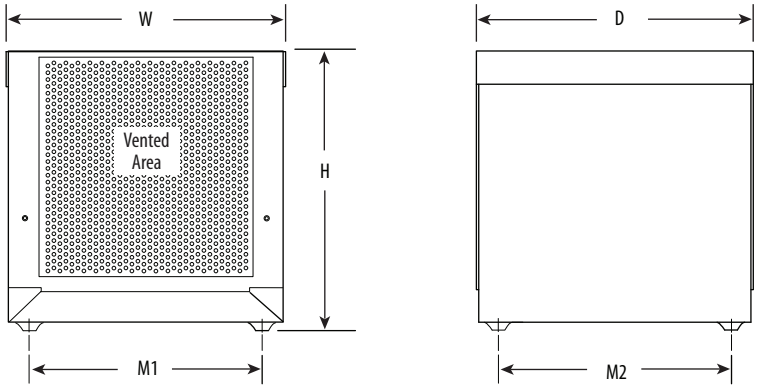

Cabinet 2 – Floor Mounted

Catalog Number 1321- …	Unit	Dimensions in mm (in.) and Weights in kg (lbs.)					
		H	W	D	Feet M1	Feet M2	Weight (Cabinet Only)
3RA18-C to 3RAB250-A	Cabinet 2	330 (13.0)	336 (13.2)	332 (13.1)	279 (11.0)	279 (11.0)	8.2 (18)

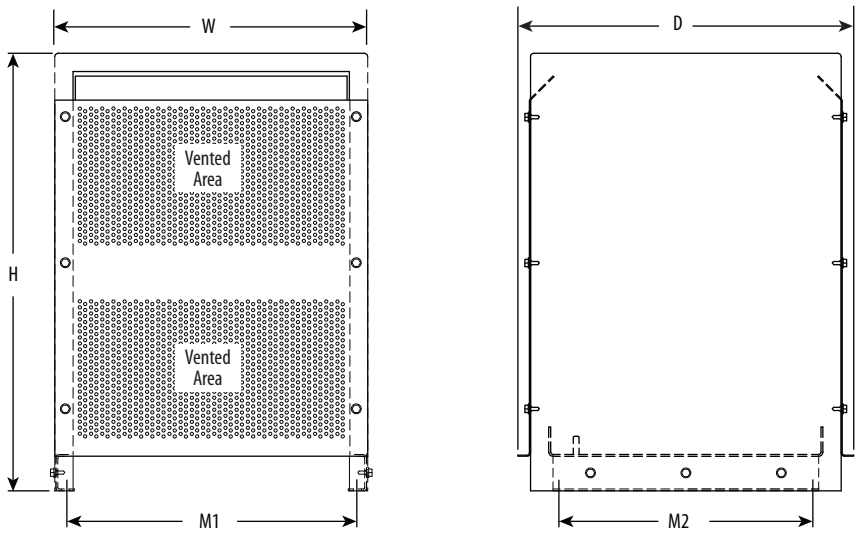

Cabinet 3 – Floor Mounted

Catalog Number 1321- …	Unit	Dimensions in mm (in.) and Weights in kg (lbs.)					
		H	W	D	Feet M1	Feet M2	Weight (Cabinet Only)
3RA250-B to 3RA500-A	Cabinet 3	610 (24.0)	429 (16.9)	467 (18.4)	406 (16.0)	343 (13.5)	12.2 (27)

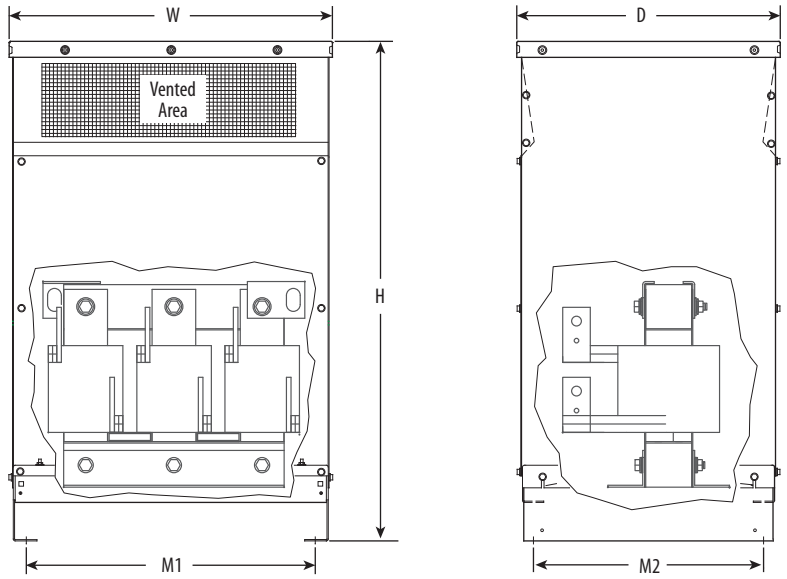

Cabinets 4 & 5 – Floor Mounted

Catalog Number 1321- …	Unit	Dimensions in mm (in.) and Weights in kg (lbs.)					
		H	W	D	Feet M1	Feet M2	Weight (1) (Cabinet Only)
3RA500-B to 3RA600-C	Cabinet 4	1194 (47.0)	674 (26.6)	633 (24.9)	592 (23.3)	552 (21.8)	72.1 (159)
3RA750-A to 3RA850-B 3RA850-C to 3RA1000-C	Cabinet 5	1194 (47.0)	776 (30.6)	633 (24.9)	694 (27.3)	552 (21.8)	72.1 (159)

(1) For total weight - add enclosure weight to specific reactor weight.

IP00/Open

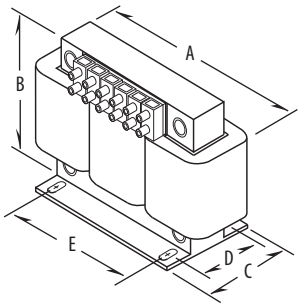

IP00 /Open, 45 Amps (fundamental) and Below

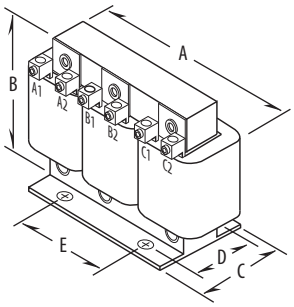

IP00/Open, 80 Amps (fundamental) and Above

Sizing Guidelines

Fundamental amps are used for sizing the reactor to be equal to or slightly higher than the total motor FLA. Sizing reactors to drive ampere ratings alone may result in mis-sizing the reactor.

Catalog Number	Fundamental Amps	Inductance - mH (Based on Fundamental Amps)	Watts Loss	Dimensions in mm (in.) and Weight in kg (lbs.)					
				A	B	C	D[1]	E	Weight
1321-3R1-A	1	100.0	14	112 (4.40)	104 (4.10)	79 (3.10)	60 (2.35)	37 (1.44)	1.8 (4)
1321-3R1-B		50.0	14.8	112 (4.40)	104 (4.10)	71 (2.80)	50 (1.98)	37 (1.44)	1.8 (4)
1321-3R1-C		36.0	12	112 (4.40)	104 (4.10)	71 (2.80)	50 (1.98)	37 (1.44)	1.4 (3)
1321-3R1-D		18.0	5	112 (4.40)	104 (4.10)	71 (2.80)	50 (1.98)	37 (1.44)	1.4 (3)
1321-3R2-A	2	12.0	7.5	112 (4.40)	104 (4.10)	71 (2.80)	50 (1.98)	37 (1.44)	1.8 (4)
1321-3R2-B		20.0	11.3	112 (4.40)	104 (4.10)	71 (2.80)	50 (1.98)	37 (1.44)	1.8 (4)
1321-3R2-C		32.0	16	112 (4.40)	104 (4.10)	71 (2.80)	50 (1.98)	37 (1.44)	1.8 (4)
1321-3R2-D		6.0	10.7	112 (4.40)	104 (4.10)	64 (2.50)	44 (1.73)	37 (1.44)	1.4 (3)
1321-3R4-A	4	3.0	14.5	112 (4.40)	104 (4.10)	71 (2.80)	50 (1.98)	37 (1.44)	1.8 (4)
1321-3R4-B		6.5	20	112 (4.40)	104 (4.10)	71 (2.80)	50 (1.98)	37 (1.44)	1.8 (4)
1321-3R4-C		9.0	20	112 (4.40)	104 (4.10)	86 (3.40)	60 (2.35)	37 (1.44)	2.3 (5)
1321-3R4-D		12.0	21	112 (4.40)	104 (4.10)	86 (3.40)	66 (2.60)	37 (1.44)	2.7 (6)
1321-3R8-A	8	1.5	19.5	152 (6.00)	121 (4.75)	76 (3.00)	53 (2.10)	51 (2.00)	3.2 (7)
1321-3R8-B		3.0	29	152 (6.00)	121 (4.75)	76 (3.00)	53 (2.10)	51 (2.00)	3.6 (8)
1321-3R8-C		5.0	25.3	152 (6.00)	121 (4.75)	86 (3.40)	67 (2.62)	51 (2.00)	5.0 (11)
1321-3R8-D		7.5	28	152 (6.00)	121 (4.75)	86 (3.40)	63 (2.48)	51 (2.00)	5.9 (13)
1321-3R12-A	12	1.25	26	152 (6.00)	127 (5.00)	84 (3.30)	53 (2.10)	51 (2.00)	4.1 (9)
1321-3R12-B		2.5	31	152 (6.00)	127 (5.00)	84 (3.30)	53 (2.10)	51 (2.00)	4.5 (10)
1321-3R12-C		4.2	41	152 (6.00)	127 (5.00)	99 (3.90)	70 (2.75)	51 (2.00)	8.2 (18)
1321-3R18-A	18	0.8	36	152 (6.00)	135 (5.30)	81 (3.20)	53 (2.10)	51 (2.00)	4.1 (9)
1321-3R18-B		1.5	43	152 (6.00)	135 (5.30)	89 (3.50)	63 (2.48)	51 (2.00)	5.5 (12)
1321-3R18-C		2.5	43	206 (8.10)	155 (6.10)	102 (4.00)	66 (2.60)	76 (3.00)	7.3 (16)
1321-3R25-A	25	0.5	48	183 (7.20)	147 (5.80)	89 (3.50)	60 (2.35)	76 (3.00)	5.0 (11)
1321-3R25-B		1.2	52	183 (7.20)	147 (5.80)	89 (3.50)	60 (2.35)	76 (3.00)	6.4 (14)
1321-3R25-C		2.0	61	183 (7.20)	147 (5.80)	109 (4.30)	79 (3.10)	76 (3.00)	9.1 (20)
1321-3R35-A	35	0.4	49	183 (7.20)	147 (5.80)	102 (4.00)	66 (2.60)	76 (3.00)	6.4 (14)
1321-3R35-B		0.8	54	183 (7.20)	147 (5.80)	102 (4.00)	70 (2.75)	76 (3.00)	7.3 (16)
1321-3R35-C		1.2	54	229 (9.00)	188 (7.40)	119 (4.70)	80 (3.16)	76 (3.00)	14.0 (30)

continued

Catalog Number	Fundamental Amps	Inductance - mH (Based on Fundamental Amps)	Watts Loss	Dimensions in mm (in.) and Weight in kg (lbs.)					
				A	B	C	D[1]	E	Weight
1321-3R45-A	45	0.3	54	229 (9.00)	188 (7.40)	119 (4.70)	80 (3.16)	76 (3.00)	10.0 (22)
1321-3R45-B		0.7	62	229 (9.00)	188 (7.40)	119 (4.70)	80 (3.16)	76 (3.00)	13.0 (28)
1321-3R45-C		1.2	65	229 (9.00)	185 (7.30)	135 (5.30)	93 (3.66)	76 (3.00)	18.0 (39)
1321-3R55-A	55	0.25	64	229 (9.00)	185 (7.30)	135 (5.30)	80 (3.16)	76 (3.00)	11.0 (24)
1321-3R55-B		0.5	67	229 (9.00)	178 (7.00)	135 (5.30)	80 (3.16)	76 (3.00)	12.0 (26)
1321-3R55-C		0.85	71	229 (9.00)	178 (7.00)	152 (6.00)	99 (3.91)	76 (3.00)	16.0 (35)
1321-3R80-A	80	0.2	82	229 (9.00)	183 (7.20)	160 (6.30)	88 (3.47)	92 (3.63)	11.3 (25)
1321-3R80-B		0.4	86	229 (9.00)	183 (7.20)	165 (6.50)	88 (3.47)	92 (3.63)	14.9 (33)
1321-3R80-C		0.7	96	274 (10.80)	216 (8.50)	173 (6.80)	106 (4.16)	92 (3.63)	28.0 (61)
1321-3R100-A	100	0.15	94	229 (9.00)	185 (7.30)	165 (6.50)	84 (3.30)	92 (3.63)	13.1 (29)
1321-3R100-B		0.3	84	229 (9.00)	185 (7.30)	173 (6.80)	93 (3.66)	92 (3.63)	16.8 (37)
1321-3R100-C		0.45	108	274 (10.80)	210 (8.30)	156 (6.20)	106 (4.16)	92 (3.63)	34.0 (74)
1321-3R130-A	130	0.1	108	229 (9.00)	178 (7.00)	118 (4.70)	80 (3.16)	76 (3.00)	13.1 (29)
1321-3R130-B		0.2	180	229 (9.00)	183 (7.20)	173 (6.80)	93 (3.66)	92 (3.63)	19.5 (43)
1321-3R130-C		0.3	128	279 (11.00)	216 (8.50)	156 (6.20)	106 (4.16)	92 (3.63)	29.0 (64)
1321-3R160-A	160	0.075	116	229 (9.00)	183 (7.20)	173 (6.80)	80 (3.16)	92 (3.63)	18.6 (41)
1321-3R160-B		0.15	149	274 (10.80)	211 (8.30)	152 (6.00)	88 (3.47)	92 (3.63)	23.0 (50)
1321-3R160-C		0.23	138	292 (11.50)	216 (8.50)	229 (9.00)	119 (4.69)	92 (3.63)	30.0 (67)
1321-3R200-A	200	0.055	124	229 (9.00)	191 (7.50)	185 (7.30)	106 (4.16)	76 (3.00)	17.2 (38)
1321-3R200-B[1]		0.110	168	229 (9.00)	191 (7.50)	211 (8.30)	112 (4.41)	76 (3.00)	24.5 (54)
1321-3R200-C[1]		0.185	146	274 (10.80)	211 (8.30)	254 (10.00)	150 (5.91)	92 (3.63)	45.4 (100)
1321-3RB250-A[1]	250	0.045	154	229 (9.00)	191 (7.50)	229 (9.00)	106 (4.19)	76 (3.00)	21.3 (47)
1321-3RB250-B[1]		0.090	231	274 (10.80)	216 (8.50)	229 (9.00)	131 (5.16)	117 (4.60)	36.3 (80)
1321-3RB250-C[1]		0.150	219	366 (14.40)	284 (11.20)	262 (10.30)	148 (5.82)	117 (4.60)	57.0 (125)
1321-3RB320-A[1]	320	0.040	224	274 (10.80)	229 (9.00)	211 (8.30)	131 (5.16)	117 (4.60)	36.3 (80)
1321-3RB320-B[1]		0.075	264	274 (10.80)	229 (9.00)	254 (10.00)	149 (5.88)	117 (4.60)	46.3 (102)
1321-3RB320-C[1]		0.125	351	366 (14.40)	286 (11.30)	267 (10.50)	181 (7.13)	117 (4.60)	72.6 (160)
1321-3RB400-A[1]	400	0.030	231	274 (10.80)	254 (10.00)	254 (10.00)	131 (5.16)	117 (4.60)	38.1 (84)
1321-3RB400-B[1]		0.060	333	381 (15.00)	286 (11.30)	292 (11.50)	172 (6.76)	117 (4.60)	53.5 (118)
1321-3RB400-C[1]		0.105	293	366 (14.40)	286 (11.30)	318 (12.50)	184 (7.26)	117 (4.60)	67.6 (149)
1321-3R500-A[1]	500	0.025	266	274 (10.80)	229 (9.00)	267 (10.50)	140 (5.50)	117 (4.60)	42.2 (93)
1321-3R500-B[1]		0.050	340	366 (14.40)	292 (11.50)	292 (11.50)	172 (6.76)	117 (4.60)	53.5 (118)
1321-3R500-C[1]		0.085	422	366 (14.40)	292 (11.50)	338 (13.30)	248 (9.76)	117 (4.60)	95.3 (210)
1321-3R600-A[1]	600	0.020	307	366 (14.40)	292 (11.50)	254 (10.00)	134 (5.26)	117 (4.60)	54.4 (120)
1321-3R600-B[1]		0.040	414	366 (14.40)	286 (11.30)	305 (12.00)	203 (8.00)	117 (4.60)	79.4 (175)
1321-3R600-C[1]		0.065	406	366 (14.40)	286 (11.30)	381 (15.00)	235 (9.26)	117 (4.60)	122.5 (270)
1321-3R750-A[1]	750	0.015	427	366 (14.40)	292 (11.50)	279 (11.00)	168 (6.63)	183 (7.20)	63.5 (140)
1321-3R750-B[1]		0.029	630	366 (14.40)	292 (11.50)	318 (12.50)	204 (8.01)	183 (7.20)	86.2 (190)
1321-3R750-C[1]		0.048	552	366 (14.40)	368 (14.50)	356 (14.00)	235 (9.26)	183 (7.20)	120.2 (265)
1321-3R750-E[1]		0.060	810	366 (14.40)	368 (14.50)	381 (15.00)	276 (10.88)	183 (7.20)	147.4 (325)
1321-3R850-A[1]	850	0.015	799	451 (17.80)	394 (15.50)	368 (14.50)	191 (7.50)	183 (7.20)	88.0 (195)
1321-3R850-B[1]		0.027	756	451 (17.80)	394 (15.50)	394 (15.50)	208 (8.20)	183 (7.20)	98.0 (215)
1321-3R850-C[1]		0.042	758	451 (17.80)	400 (15.80)	445 (17.50)	208 (8.20)	183 (7.20)	143.0 (315)
1321-3R1000-B[1]	1000	0.022	964	514 (20.25)	425 (16.80)	330 (13.00)	216 (8.50)	183 (7.20)	185.0 (408)
1321-3R1000-C[1]		0.038	960	514 (20.25)	425 (16.80)	381 (15.00)	273 (10.76)	183 (7.20)	267.2 (589)

(1) Removable lifting rings are supplied with the unit.

1321 Reflective Wave Reduction (RWR) Devices

Description of Reflected Wave Phenomenon

The inverter section of a drive does not produce sinusoidal voltage, but rather a series of voltage pulses created from the DC bus. These pulses travel down the motor cables to the motor and then reflected back to the drive. The reflection is dependant on the rise time of the drive output voltage, cable characteristics, cable length and motor impedance. If the voltage reflection is combined with another subsequent pulse, peak voltages can be at a destructive level. A single IGBT drive output may have reflected wave transient voltage stresses of up to twice (2 pu or per unit) the DC bus voltage between its own output wires. Multiple drive output wires in a single conduit or wire tray further increase output wire voltage stress between multi-drive output wires that are touching. Drive #1 may have a (+) 2 pu stress while drive #2 may simultaneously have a (–) 2 pu stress.

Refer to the Wiring & Grounding Guidelines for PWM Drives (publication DRIVES-IN001) for details.

Applying RWR Devices

At the Output of the Drive

In long motor lead applications, an Allen-Bradley 1321 RWR located between the drive and motor helps to reduce dv/dt and motor terminal peak voltages. The use of an RWR device also helps protect the drive from surge currents caused by rapid changes in the load.

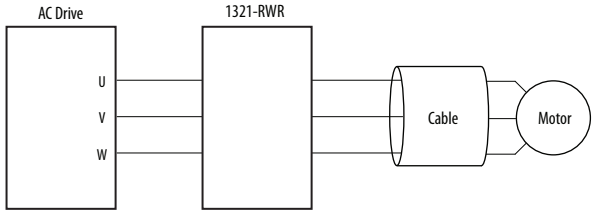

- Protect Motors from Long Lead Effects
- Reduce Output Voltage dv/dt
- Extend Semiconductor Life
- Reduce Surge Currents
- Reduce Motor Temperature
- Reduce Audible Motor Noise

Motor Protection

Allen-Bradley Reflective Wave Reduction devices can help protect motors from high peak voltages.

For IGBT drive applications with long drive-to-motor lead lengths, Allen-Bradley RWR devices can help protect against fast dv/dt rise times.

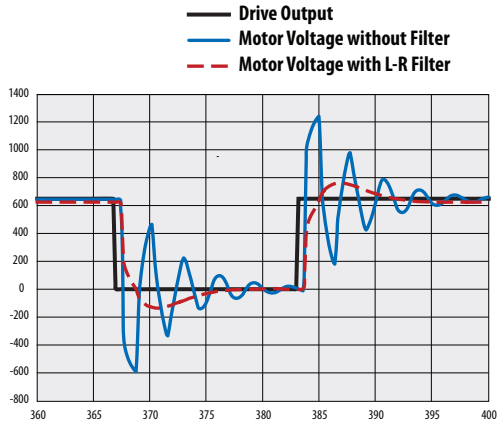

Catalog Number Explanation

IMPORTANT 1321-RWR products replace existing 1204-RWR products. However, 1204-RWRC modules (RWR and Common Mode Choke assembly) are still available.

Position	1-8	9	11	12
	1321 – RWR	8	– D	P
	a	b	c	d

a

Product	
Code	Type
1321-RWR	Reflective Wave Reduction Device

b1

Rating	
400-480V ac	
Code	Fundamental Amps
8	8
12	12
18	18
25	25
35	35
45	45
55	55
80	80
100	100
130	130
160	160
200	200
250	250
320	320

b2

Rating	
600V ac	
Code	Fundamental Amps
8	8
12	12
18	18
25	25
35	35
45	45
55	55
80	80
100	100
130	130
160	160
200	200
250	250

c

Voltage Rating	
Code	Voltage
D	400/480V ac
E	600V ac

d

Enclosure	
Code	Description
P	Panel Mount
A	NEMA/UL Type 1 ∗
W	NEMA/UL Type 3R ∗

∗ Not available

Specifications

Specification		Rating
Material	Enclosures	IP00 (Open)
	Terminations	1-45 Amp (fundamental) Ratings – Finger guard IP20 terminal block
		80-160 Amp (fundamental) Ratings – Solid copper box lugs
		200-400 Amp (fundamental) Ratings – Copper tab terminals
		401 Amps and Above – Copper tab terminals
Harmonic Compensation	All line reactors are compensated for the additional currents and high frequencies caused by the presence of harmonics	
General Protection	Impedance	3%
	Overload Rating	300% of fundamental current for (1) minute
IGBT Protection	First turn triple insulated offering protection up to 16kV	16,000 Volts per Microsecond dv/dt Protection 20 kHz Maximum Switching Frequency
Electrical	Max. Rated Voltage	600V AC, 50/60 Hz frequency
	Max. Switching Freq.	4 kHz
	Temperature Rise	115 degrees C.
	Dielectric Strength	4,000 Volts rms (5,600 volts peak)
	Inductance Curve	100% at 100% current, 100% at 150% current, 50% at 350% current
	Insulation System	Class H (180 degrees C or better)
	Impregnation	High bond strength epoxy impregnation, 4,000V high dielectric strength
Environmental	Ambient Temperature	45 degrees C.
	U.L. Listed	UL-508 - IP00, IP20, and IP11
	International	Conforms to VDE 0550
	CE	Not certified

Termination

Allen-Bradley 1321 RWR devices rated 45 Amps (fundamental) and below are supplied with an integral mounted terminal block. Devices rated from 55 to 160 Amps (fundamental) are supplied with box lugs. Devices rated 200 to 400 Amps (fundamental) can be supplied with box lugs or copper tabs. Above 400 Amps (fundamental), solid copper tabs are used.

Approximate Dimensions, Weights, Wire Size and Terminal Blocks

The dimensions and weights provided on the following page is for estimating purposes only. Contact your Allen-Bradley Sales Office if certified drawings are required for planning and installation.

RWR Catalog No. x = D (400V), E (600V)	Fund. Amps	Cont. Amps	Wire Size	Watts Loss		Figure (see page 15)	Dimensions *mm (in.)*					Weight
			mm^2 (AWG)	400V	600V		A	B	C	D	E	kg (lbs.)
1321-RWR8-xP	8	12	2.5-4.0 (14-12)	389	536	1	282.6 (11.13)	298.5 (11.75)	171.5 (6.75)	7.4 (0.29)	7.4 x 11.6 (0.29 x 0.46)	4.8 (10.5)
1321-RWR12-xP	12	18	2.5-4.0 (14-12)	391	406	1	282.6 (11.13)	298.5 (11.75)	174.6 (6.88)	7.4 (0.29)	7.4 x 11.6 (0.29 x 0.46)	5.7 (12.5)
1321-RWR18-xP	18	27	2.5-4.0 (14-12)	403	551	1	282.6 (11.13)	298.5 (11.75)	174.6 (6.88)	7.4 (0.29)	7.4 x 11.6 (0.29 x 0.46)	7.3 (16)
1321-RWR25-xP	25	37.5	6.0 (10)	412	562	1	282.6 (11.13)	298.5 (11.75)	193.7 (7.63)	7.4 (0.29)	7.4 x 11.6 (0.29 x 0.46)	7.7 (17)
1321-RWR35-xP	35	52.5	10.0-16.0 (8-6)	414	429	1	282.6 (11.13)	298.5 (11.75)	193.7 (7.63)	7.4 (0.29)	7.4 x 11.6 (0.29 x 0.46)	8.8 (19.5)
1321-RWR45-xP	45	67.5	16.0 (6)	422	572	2	319.1 (12.56)	392.1 (15.44)	158.8 (6.25)	10.5 (0.41)	10.3 x 17.9 (0.41 x 0.70)	17.5 (38.5)
1321-RWR55-xP	55	82.5	25.0 (4)	427	577	2	320.7 (12.63)	392.1 (15.44)	158.8 (6.25)	10.5 (0.41)	10.3 x 17.9 (0.41 x 0.70)	18.4 (40.5)
1321-RWR80-xP	80	120	35.0-50.0 (2-1/0)	446	341	2	322.3 (12.69)	395.3 (15.56)	177.8 (7.00)	10.5 (0.41)	10.3 x 17.9 (0.41 x 0.70)	20.4 (45)
1321-RWR100-xP	100	150	50.0-70.0 (1/0-2/0)	444	339	2	320.7 (12.63)	393.7 (15.50)	187.3 (7.38)	10.5 (0.41)	10.3 x 17.9 (0.41 x 0.70)	22.5 (49.5)
1321-RWR130-xP	130	195	70.0-120.0 (2/0-4/0)	630	495	2	317.5 (12.50)	390.5 (15.38)	187.3 (7.38)	10.5 (0.41)	10.3 x 17.9 (0.41 x 0.70)	24.5 (54)
1321-RWR160-xP	160	240	120.0 (4/0)	599	464	3	355.6 (14.00)	438.2 (17.25)	250.8 (9.88)	10.5 (0.41)	10.3 x 25.8 (0.41 x 1.02)	30.8 (68)
1321-RWR200-xP	200	300	120.0-185.0 (4/0-350 MCM)	618	612	2	317.5 (12.50)	393.7 (15.50)	214.3 (8.44)	10.5 (0.41)	10.3 x 17.9 (0.41 x 0.70)	29.9 (66)
1321-RWR250-xP	250	375	185.0 (350 MCM)	681	546	3	358.8 (14.13)	439.8 (17.31)	225.4 (8.88)	10.5 (0.41)	10.3 x 25.8 (0.41 x 1.02)	41.7 (92)
1321-RWR320-DP	320	480	240.0 (500 MCM)	489	NA	3	358.8 (14.13)	438.2 (17.25)	250.8 (9.88)	10.5 (0.41)	10.3 x 25.8 (0.41 x 1.02)	52.2 (115)

1321-RWR Assembly Components

400/480V

Reactor	Resistor Ohms	Resistor Watts	Wire Size (AWG)
1321-3R8-B	50	250	14-12
1321-3R12-B	50	250	14-12
1321-3R18-B	50	250	14-12
1321-3R25-B	50	250	10
1321-3R35-B	50	250	8-6
1321-3R45-B	50	250	6
1321-3R55-B	50	250	4
1321-3R80-B	50	250	2-1/0
1321-3R100-B	50	250	1/0-2/0
1321-3R130-B	50	300	2/0-4/0
1321-3R160-B	50	300	4/0
1321-3R200-B	50	300	4/0-350 MCM
1321-3RB250-B	50	300	350 MCM
1321-3R320-B	50	300	500 MCM

600V

Reactor	Resistor Ohms	Resistor Watts	Wire Size (AWG)
1321-3R8-B	50	375	14-12
1321-3R12-B	50	375	14-12
1321-3R18-B	50	375	14-12
1321-3R25-B	50	375	10
1321-3R35-B	50	375	8-6
1321-3R45-B	50	375	6
1321-3R55-B	50	375	4
1321-3R80-B	50	375	2-1/0
1321-3R100-B	50	375	1/0-2/0
1321-3R130-B	50	420	2/0-4/0
1321-3R160-B	50	420	4/0
1321-3R200-B	50	420	4/0-350 MCM
1321-3RB250-B	50	420	350 MCM

Dimension Reference

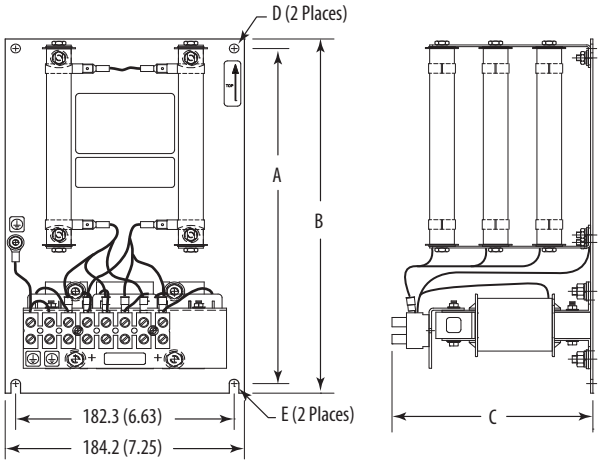

Figure 1

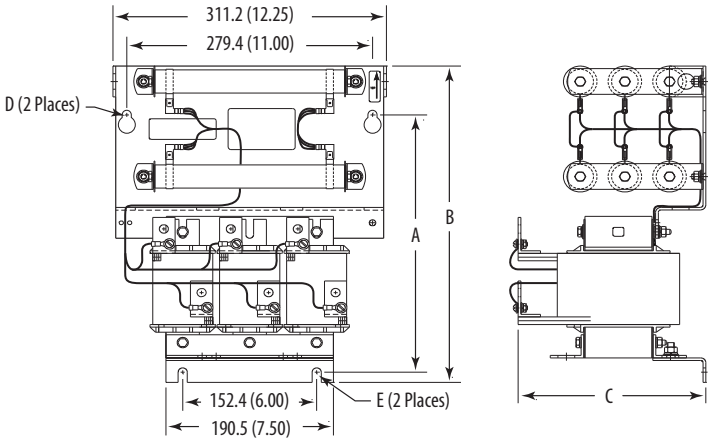

Figure 2

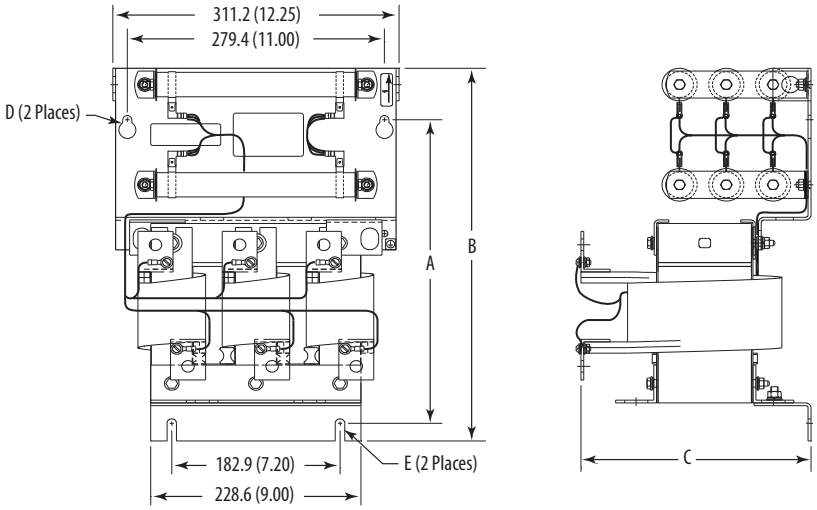

Figure 3

Terminal Block Details

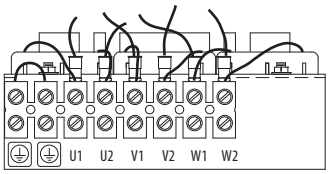

Figure 1

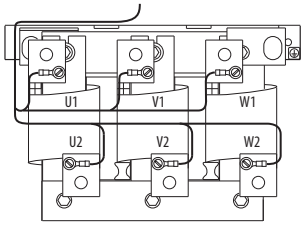

Figures 2 & 3

1321-3TH/3TW Series Three-Phase Isolation Transformers

Allen-Bradley 1321 Isolation Transformers are designed to meet the standard horsepower, voltage ratings and harmonics of the Allen-Bradley variable speed drives.

Catalog Number Explanation

Position	1-4	6	7	8	9	11	12
	1321	– 3	T	W	005	– A	A
	a	b	c	d	e	f	g

a

Product	
Code	Type
1321	Power Component

b

Phases	
Code	Description
3	Three-Phase

c

Device	
Code	Description
T	Transformer

d

Mounting	
Code	Description
W	Wall
H	Floor

e

Rating	
Code	kVA
005	5
007	7.5
011	11
014	14
020	20
027	27
034	34
040	40
051	51
063	63
075	75
093	93
118	118
145	145
175	175
220	220
275	275
330	330
440	440
550	550
660	660
770	770
880	880

f

Primary Voltage	
Code	Voltage
A	230V ac
B	460V ac
C	575V ac
X	208V ac

g

Secondary Voltage	
Code	Voltage
A	230V ac
B	460V ac
C	575V ac
X	208V ac

Specifications

Specification		Rating
Electrical	General	Delta primary, wye secondary, 60 Hz, Aluminum wound, Neutral terminal available for customer use
	Standard Voltage Taps	5.0-175 kVA 1-5.0% FCAN & FCBN
		220-880 kVA 1-2.5% FCAN & FCBN
	Insulation System	Class 220
		150 degrees C Rise Over 40 degrees C Ambient
		Peak 40 degrees C Ambient with 30 degrees C 24 Hour Avg.
	Efficiency	98% (2% losses)
Environmental	Elevation	Up to 1,000 Meters. Above 1,000 Meters, consult factory for derating
	U.L. Listed	File E112313
Construction	Enclosure	NEMA/UL Type 3R (IP32)
		Heavy duty ventilated enclosure with metal screens protecting all vents and finished in ANSI 61 grey
	Termination	Transformers up to 75kVA have integral high and low voltage lugs installed, suitable for copper or aluminum cable installation
	Conduit Entry	Standard knockouts on all enclosures
	Mounting	5-51 kVA units suitable for either floor or wall mounting. 63-75 kVA units suitable for floor, wall or ceiling mounting with mounting kit 1321-3TWM2 (Style NH3). Larger units are floor mount only
General	Impedance	4-6% impedance (nominal)
	Short Circuit Capability	Meets UL short circuit withstand capability
	Overload Rating	Windings designed to withstand overcurrent of 150% of rated load for 60 Seconds or 200% of rated load for 30 Seconds
	Duty Cycle	(1) start every (2) hours
	Thermostats	Thermostats with 1 N.C contact in each coil, wired in series and integral on all units
	K Factor	4
	Custom Options (consult factory for operating information)	50 Hz units
		Electrostatic shield (60dB attenuation typical)
		NEMA/UL Type 2 or IP20 (NEMA/UL Type 1)
		Core and coil construction (open)
		Additional HP or kVA sizes, voltages, extra primary taps, copper wound units, etc.

Approximate Mounting Dimensions

IP32, NEMA/UL Type 3R - Styles NH3 through NH4

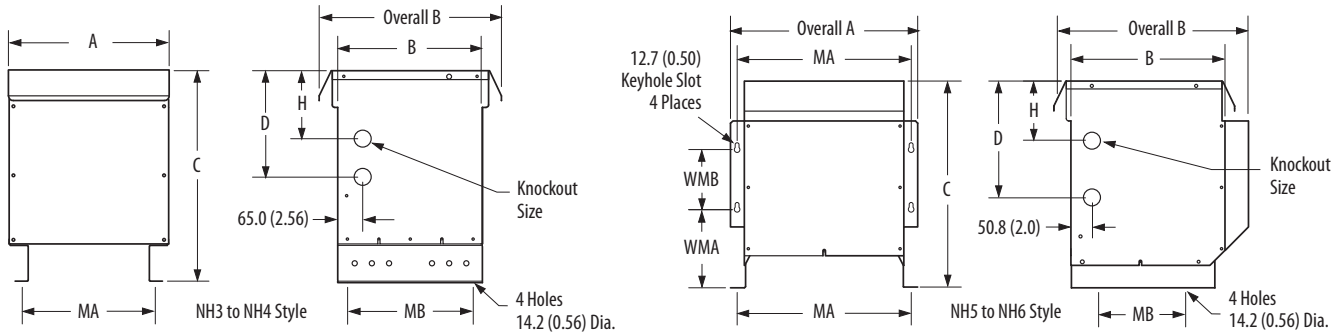

Dimensions in mm (in.)

Style	A	Overall A	B	Overall B	C	D	H	K	MA	MB	WMB	WMA
NH3	660.4 (26.00)	–	533.4 (21.00)	635.0 (25.00)	66.0 (38.00)	609.6 (24.00)	355.6 (14.00)	50.8 x 76.2 (2.00 x 3.00)	546.1 (21.50)	482.6 (19.00)	–	–
NH4	812.8 (32.00)	–	647.7 (25.50)	749.3 (29.50)	68.0 (41.00)	609.6 (24.00)	304.8 (12.00)	50.8 x 76.2 (2.00 x 3.00)	596.9 (23.50)	596.9 (23.50)	–	–
NH5 (1)	425.5 (16.75)	492.8 (19.40)	381.0 (15.00)	513.1 (20.20)	546.1 (21.50)	304.8 (12.00)	152.4 (6.00)	35.1 x 44.4 (1.38 x 1.75)	457.2 (18.00)	228.6 (9.00)	177.8 (7.00)	184.4 (7.26)
NH6 (1)	546.1 (21.50)	607.1 (23.90)	495.3 (19.50)	730.3 (28.75)	730.3 (28.75)	431.8 (17.00)	215.9 (8.50)	35.1 x 44.4 (1.38 x 1.75)	577.9 (22.75)	228.6 (9.00)	203.2 (8.00)	247.1 (9.73)

(1) Enclosure Styles NH1 and NH2 are replaced by NH5 and NH6 through 1321-3TH005 - 1321-3TH051 ratings.

IP32, NEMA/UL Type 3R -Styles NJ1 through NJ6

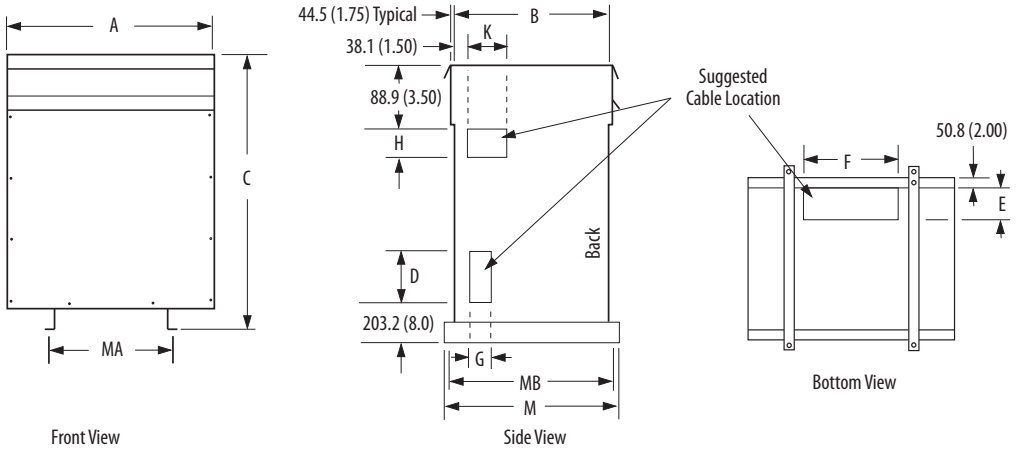

Dimensions in mm (in.)

Style	A	B	C	D	E	F	G	H	K	M	MA	MB
NJ1	1003.3 (39.50)	762.0 (30.00)	1308.1 (51.50)	254.0 (10.00)	190.5 (7.50)	546.1 (21.50)	203.2 (8.00)	165.1 (6.50)	342.9 (13.50)	863.6 (34.00)	609.6 (24.00)	812.8 (32.00)
NJ2	1239.1 (48.50)	836.6 (34.00)	1498.6 (59.00)	330.2 (13.00)	215.9 (8.50)	635.0 (25.00)	228.6 (9.00)	215.9 (8.50)	393.7 (15.50)	965.2 (38.00)	698.5 (27.50)	914.4 (36.00)
NJ3	1308.1 (51.50)	990.6 (39.00)	1676.4 (66.00)	406.4 (16.00)	241.3 (9.50)	800.1 (31.50)	254.0 (10.00)	292.1 (11.50)	457.2 (18.00)	1092.2 (43.00)	863.6 (34.00)	1041.4 (41.00)
NJ6	1625.6 (64.00)	1016.0 (40.00)	1727.2 (68.00)	406.4 (16.00)	266.7 (10.50)	952.5 (37.50)	279.4 (11.00)	292.1 (11.50)	457.2 (18.00)	1117.6 (44.00)	1016.0 (40.00)	1066.8 (42.00)

Wiring Diagrams, Ratings and Weights

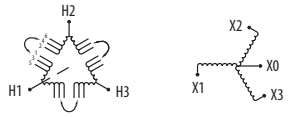

Wiring Diagram 1

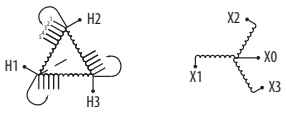

Wiring Diagram 2

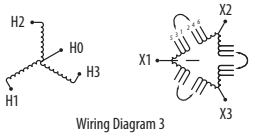

Wiring Diagram 3

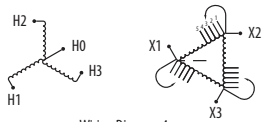

Wiring Diagram 4

kVA	Catalog Number	Style	Primary Voltage	Secondary Voltage	Wiring Diagram	Weight kg (lbs.)
5	1321-3TW005-AA	NH5	230	230	1	63.5 (140)
	1321-3TW005-AB	NH5	230	460	3	63.5 (140)
	1321-3TW005-AC	NH5	230	575	3	63.5 (140)
	1321-3TW005-BA	NH5	460	230	1	63.5 (140)
	1321-3TW005-BB	NH5	460	460	1	63.5 (140)
	1321-3TW005-BC	NH5	460	575	3	63.5 (140)
	1321-3TW005-CA	NH5	575	230	1	63.5 (140)
	1321-3TW005-CB	NH5	575	460	1	63.5 (140)
	1321-3TW005-CC	NH5	575	575	1	63.5 (140)
	1321-3TW005-XX	NH5	208	208	1	63.5 (140)
40	1321-3TW040-AA	NH6	230	230	2	145.2 (320)
	1321-3TW040-AB	NH6	230	460	4	145.2 (320)
	1321-3TW040-AC	NH6	230	575	4	145.2 (320)
	1321-3TW040-BA	NH6	460	230	2	145.2 (320)
	1321-3TW040-BB	NH6	460	460	2	145.2 (320)
	1321-3TW040-BC	NH6	460	575	4	145.2 (320)
	1321-3TW040-CA	NH6	575	230	2	145.2 (320)
	1321-3TW040-CB	NH6	575	460	2	145.2 (320)
	1321-3TW040-CC	NH6	575	575	2	145.2 (320)
51	1321-3TW051-AA	NH6	230	230	2	190.5 (420)
	1321-3TW051-AB	NH6	230	460	4	190.5 (420)
	1321-3TW051-AC	NH6	230	575	4	190.5 (420)
	1321-3TW051-BA	NH6	460	230	2	190.5 (420)
	1321-3TW051-BB	NH6	460	460	2	190.5 (420)
	1321-3TW051-BC	NH6	460	575	4	190.5 (420)
	1321-3TW051-CA	NH6	575	230	2	190.5 (420)
	1321-3TW051-CB	NH6	575	460	2	190.5 (420)
	1321-3TW051-CC	NH6	575	575	2	190.5 (420)
63	1321-3TH063-AA	NH3	230	230	2	244.9 (540)
	1321-3TH063-AB	NH3	230	460	4	244.9 (540)
	1321-3TH063-AC	NH3	230	575	4	244.9 (540)
	1321-3TH063-BA	NH3	460	230	2	244.9 (540)
	1321-3TH063-BB	NH3	460	460	2	244.9 (540)
	1321-3TH063-BC	NH3	460	575	4	244.9 (540)
	1321-3TH063-CA	NH3	575	230	2	244.9 (540)
	1321-3TH063-CB	NH3	575	460	2	244.9 (540)
	1321-3TH063-CC	NH3	575	575	2	244.9 (540)
75	1321-3TH075-AA	NH3	230	230	2	263.1 (580)
	1321-3TH075-AB	NH3	230	460	4	263.1 (580)
	1321-3TH075-AC	NH3	230	575	4	263.1 (580)
	1321-3TH075-BA	NH3	460	230	2	263.1 (580)
	1321-3TH075-BB	NH3	460	460	2	263.1 (580)
	1321-3TH075-BC	NH3	460	575	4	263.1 (580)
	1321-3TH075-CA	NH3	575	230	2	263.1 (580)
	1321-3TH075-CB	NH3	575	460	2	263.1 (580)
	1321-3TH075-CC	NH3	575	575	2	263.1 (580)
93	1321-3TH093-AA	NH3	230	230	2	285.8 (630)
	1321-3TH093-AB	NH3	230	460	4	285.8 (630)
	1321-3TH093-AC	NH3	230	575	4	285.8 (630)
	1321-3TH093-BA	NH3	460	230	2	285.8 (630)
	1321-3TH093-BB	NH3	460	460	2	285.8 (630)
	1321-3TH093-BC	NH3	460	575	4	285.8 (630)
	1321-3TH093-CA	NH3	575	230	2	285.8 (630)
	1321-3TH093-CB	NH3	575	460	2	285.8 (630)
	1321-3TH093-CC	NH3	575	575	2	285.8 (630)
118	1321-3TH118-AA	NH3	230	230	2	328.9 (725)
	1321-3TH118-AB	NH3	230	460	4	328.9 (725)
	1321-3TH118-AC	NH3	230	575	4	328.9 (725)
	1321-3TH118-BA	NH3	460	230	2	328.9 (725)
	1321-3TH118-BB	NH3	460	460	2	328.9 (725)
	1321-3TH118-BC	NH3	460	575	4	328.9 (725)
	1321-3TH118-CA	NH3	575	230	2	328.9 (725)
	1321-3TH118-CB	NH3	575	460	2	328.9 (725)
	1321-3TH118-CC	NH3	575	575	2	328.9 (725)
145	1321-3TH145-AA	NH4	230	230	2	408.2 (900)
	1321-3TH145-AB	NH4	230	460	4	408.2 (900)
	1321-3TH145-AC	NH4	230	575	4	408.2 (900)
	1321-3TH145-BA	NH4	460	230	2	408.2 (900)
	1321-3TH145-BB	NH4	460	460	2	408.2 (900)
	1321-3TH145-BC	NH4	460	575	4	408.2 (900)
	1321-3TH145-CA	NH4	575	230	2	408.2 (900)
	1321-3TH145-CB	NH4	575	460	2	408.2 (900)
	1321-3TH145-CC	NH4	575	575	2	408.2 (900)

continued

kVA	Catalog Number	Style	Primary Voltage	Secondary Voltage	Wiring Diagram	Weight kg (lbs.)
175	1321-3TH175-AA	NH4	230	230	2	453.6 (1000)
	1321-3TH175-AB	NH4	230	460	4	453.6 (1000)
	1321-3TH175-AC	NH4	230	575	4	453.6 (1000)
	1321-3TH175-BA	NH4	460	230	2	453.6 (1000)
	1321-3TH175-BB	NH4	460	460	2	453.6 (1000)
	1321-3TH175-BC	NH4	460	575	4	453.6 (1000)
	1321-3TH175-CA	NH4	575	230	2	453.6 (1000)
	1321-3TH175-CB	NH4	575	460	2	453.6 (1000)
	1321-3TH175-CC	NH4	575	575	2	453.6 (1000)
220	1321-3TH220-AA	NJ1	230	230	2	589.7 (1300)
	1321-3TH220-AB	NJ1	230	460	4	589.7 (1300)
	1321-3TH220-AC	NJ1	230	575	4	589.7 (1300)
	1321-3TH220-BA	NJ1	460	230	2	589.7 (1300)
	1321-3TH220-BB	NJ1	460	460	2	589.7 (1300)
	1321-3TH220-BC	NJ1	460	575	4	589.7 (1300)
	1321-3TH220-CA	NJ1	575	230	2	589.7 (1300)
	1321-3TH220-CB	NJ1	575	460	2	589.7 (1300)
	1321-3TH220-CC	NJ1	575	575	2	589.7 (1300)
275	1321-3TH275-AA	NJ1	230	230	2	680.4 (1500)
	1321-3TH275-AB	NJ1	230	460	4	680.4 (1500)
	1321-3TH275-AC	NJ1	230	575	4	680.4 (1500)
	1321-3TH275-BA	NJ1	460	230	2	680.4 (1500)
	1321-3TH275-BB	NJ1	460	460	2	680.4 (1500)
	1321-3TH275-BC	NJ1	460	575	4	680.4 (1500)
	1321-3TH275-CA	NJ1	575	230	2	680.4 (1500)
	1321-3TH275-CB	NJ1	575	460	2	680.4 (1500)
	1321-3TH275-CC	NJ1	575	575	2	680.4 (1500)
330	1321-3TH330-AA	NJ1	230	230	2	771.1 (1700)
	1321-3TH330-AB	NJ1	230	460	4	771.1 (1700)
	1321-3TH330-AC	NJ1	230	575	4	771.1 (1700)
	1321-3TH330-BA	NJ1	460	230	2	771.1 (1700)
	1321-3TH330-BB	NJ1	460	460	2	771.1 (1700)
	1321-3TH330-BC	NJ1	460	575	4	771.1 (1700)
	1321-3TH330-CA	NJ1	575	230	2	771.1 (1700)
	1321-3TH330-CB	NJ1	575	460	2	771.1 (1700)
	1321-3TH330-CC	NJ1	575	575	2	771.1 (1700)
440	1321-3TH440-AA	NJ2	230	230	1	907.2 (2000)
	1321-3TH440-AB	NJ2	230	460	3	907.2 (2000)
	1321-3TH440-AC	NJ2	230	575	3	907.2 (2000)
	1321-3TH440-BA	NJ2	460	230	1	907.2 (2000)
	1321-3TH440-BB	NJ2	460	460	1	907.2 (2000)
	1321-3TH440-BC	NJ2	460	575	3	907.2 (2000)
	1321-3TH440-CA	NJ2	575	230	1	907.2 (2000)
	1321-3TH440-CB	NJ2	575	460	1	907.2 (2000)
	1321-3TH440-CC	NJ2	575	575	1	907.2 (2000)
550	1321-3TH550-AA	NJ2	230	230	1	1134.0 (2500)
	1321-3TH550-AB	NJ2	230	460	3	1134.0 (2500)
	1321-3TH550-AC	NJ2	230	575	3	1134.0 (2500)
	1321-3TH550-BA	NJ2	460	230	1	1134.0 (2500)
	1321-3TH550-BB	NJ2	460	460	1	1134.0 (2500)
	1321-3TH550-BC	NJ2	460	575	3	1134.0 (2500)
	1321-3TH550-CA	NJ2	575	230	1	1134.0 (2500)
	1321-3TH550-CB	NJ2	575	460	1	1134.0 (2500)
	1321-3TH550-CC	NJ2	575	575	1	1134.0 (2500)
660	1321-3TH660-AA	NJ3	230	230	1	1360.8 (3000)
	1321-3TH660-AB	NJ3	230	460	3	1360.8 (3000)
	1321-3TH660-AC	NJ3	230	575	3	1360.8 (3000)
	1321-3TH660-BA	NJ3	460	230	1	1360.8 (3000)
	1321-3TH660-BB	NJ3	460	460	1	1360.8 (3000)
	1321-3TH660-BC	NJ3	460	575	3	1360.8 (3000)
	1321-3TH660-CA	NJ3	575	230	1	1360.8 (3000)
	1321-3TH660-CB	NJ3	575	460	1	1360.8 (3000)
	1321-3TH660-CC	NJ3	575	575	1	1360.8 (3000)
770	1321-3TH770-AA	NJ3	230	230	1	1587.6 (3500)
	1321-3TH770-AB	NJ3	230	460	3	1587.6 (3500)
	1321-3TH770-AC	NJ3	230	575	3	1587.6 (3500)
	1321-3TH770-BA	NJ3	460	230	1	1587.6 (3500)
	1321-3TH770-BB	NJ3	460	460	1	1587.6 (3500)
	1321-3TH770-BC	NJ3	460	575	3	1587.6 (3500)
	1321-3TH770-CA	NJ3	575	230	1	1587.6 (3500)
	1321-3TH770-CB	NJ3	575	460	1	1587.6 (3500)
	1321-3TH770-CC	NJ3	575	575	1	1587.6 (3500)
880	1321-3TH880-AA	NJ6	230	230	1	1678.3 (3700)
	1321-3TH880-AB	NJ6	230	460	3	1678.3 (3700)
	1321-3TH880-AC	NJ6	230	575	3	1678.3 (3700)
	1321-3TH880-BA	NJ6	460	230	1	1678.3 (3700)
	1321-3TH880-BB	NJ6	460	460	1	1678.3 (3700)
	1321-3TH880-BC	NJ6	460	575	3	1678.3 (3700)
	1321-3TH880-CA	NJ6	575	230	1	1678.3 (3700)
	1321-3TH880-CB	NJ6	575	460	1	1678.3 (3700)
	1321-3TH880-CC	NJ6	575	575	1	1678.3 (3700)

1321-M Common Mode Chokes

1321-M Common Mode Chokes can be installed with 1305, 1336 PLUS II, 1336 IMPACT™ and PowerFlex® 70/700 AC drives. When installed at the drive output the common mode choke helps to guard against interference with other electrical equipment (Programmable Controllers, sensors, analog circuits, etc.). In addition, reducing the PWM carrier frequency reduces the effects and lowers the risk of common mode noise interference.

Catalog Number Explanation

Position	1-4		6		7
	1321	–	M		009
	a		b		c

a

Product	
Code	Type
1321	Power Component

b

Device	
Code	Description
M	Common Mode Choke

c

Current Rating	
Code	Amps
001 ∗	1
009	9
048	48
180	180
670	670

∗ Same core as 1321-M009. Can be used in place of the M009, M048 or M180 if the terminal block and windings typical of those ratings are not desired.

Ratings

Choke Type	Used With	Ratings	Catalog Number
Open Style, 9A (with terminal strip)	All Drives	Communication Cables, Analog Signal Cables, etc.	1321-M001
	PowerFlex 70/700	0.37-1.5 kW (0.5-2 HP) 230V 0.37-4 kW (0.5-5 HP) 480V	1321-M009
	1305 and 1336 PLUS II	0.37-2.2 kW (0.5-2 HP) 230V 0.37-3.7 kW (0.5-5 HP) 480V	
	1336 IMPACT	0.37-3.7 kW (0.5-5 HP) 480V	
Open Style, 48A	PowerFlex 70/700	2.2-11 kW (3-15 HP) 230V 5.5-22 kW (7.5-30 HP) 480V 5.5-30 kW (7.5-40 HP) 600V	1321-M048
	1336 PLUS II	2.2-11 kW (3-15 HP) 230V 5.5-22 kW (7.5-30 HP) 480V 0.75-30 kW (1-40 HP) 600V	
	1336 IMPACT	5.5-22 kW (7.5-30 HP) 480V 5.5-30 kW (7.5-40 HP) 600V	
Open Style, 180A	PowerFlex 70/700	15-45 kW (20-60 HP) 230V 30-110 kW (40-150 HP) 480V 37-110 kW (50-150 HP) 600V	1321-M180
	1336 PLUS II	15-45 kW (20-60 HP) 230V 30-112 kW (40-150 HP) 480V 37-112 kW (50-150 HP) 600V	
	1336 IMPACT	30-112 kW (40-150 HP) 480V 37-93 kW (50-125 HP) 600V	
Open Style, 670A	PowerFlex 70/700	55-66 kW (75-100 HP) 230V 110-350 kW (150-500 HP) 480V 132-223 kW (200-300 HP) 600V	1321-M670
	1336 PLUS II	56-93 kW (75-125 HP) 230V 112-448 kW (150-600 HP) 480V 149-448 kW (200-600 HP) 600V	
	1336 IMPACT	112-448 kW (150-600 HP) 480V 149-448 kW (200-600 HP) 600V	

Approximate Mounting Dimensions

1321-M001

Dimensions are in mm (in.)

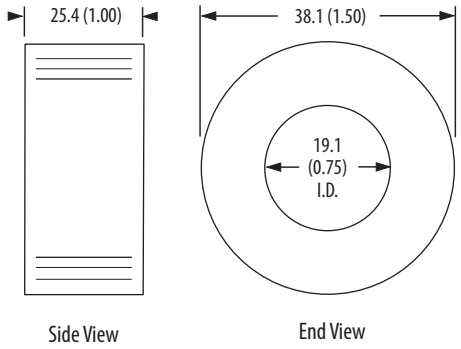

1321-M009

Dimensions are in mm (in.)

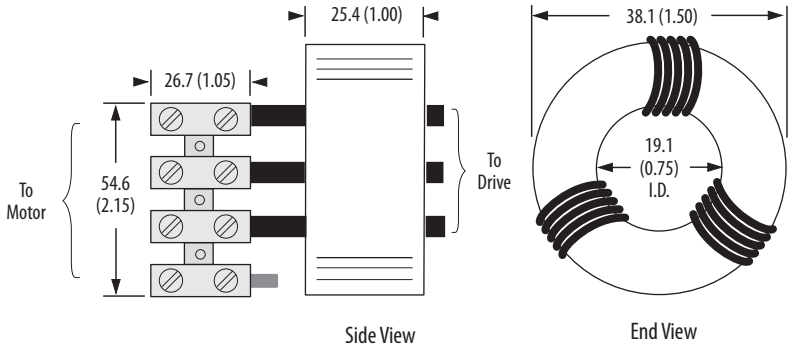

1321-M048

Dimensions are in mm (in.)

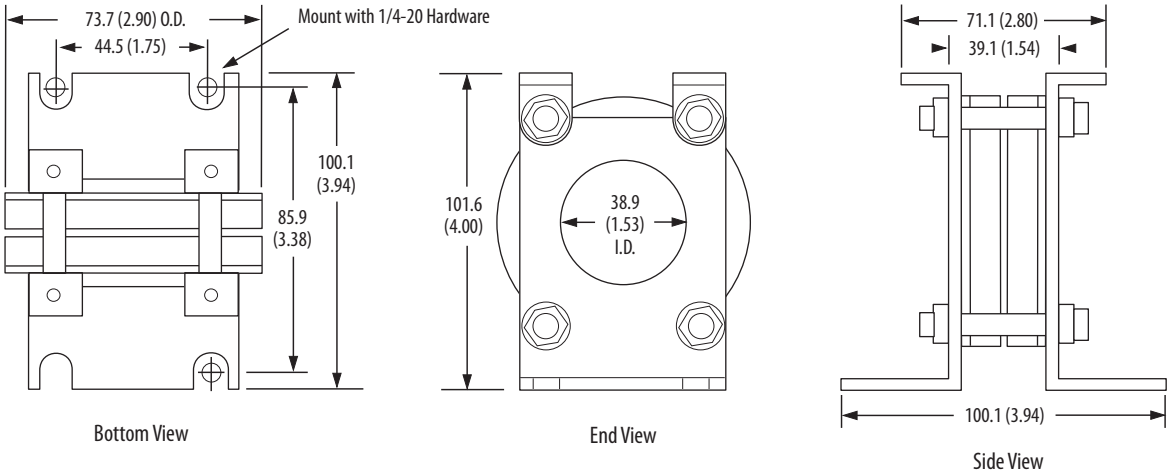

1321-M180

Dimensions are in mm (in.)

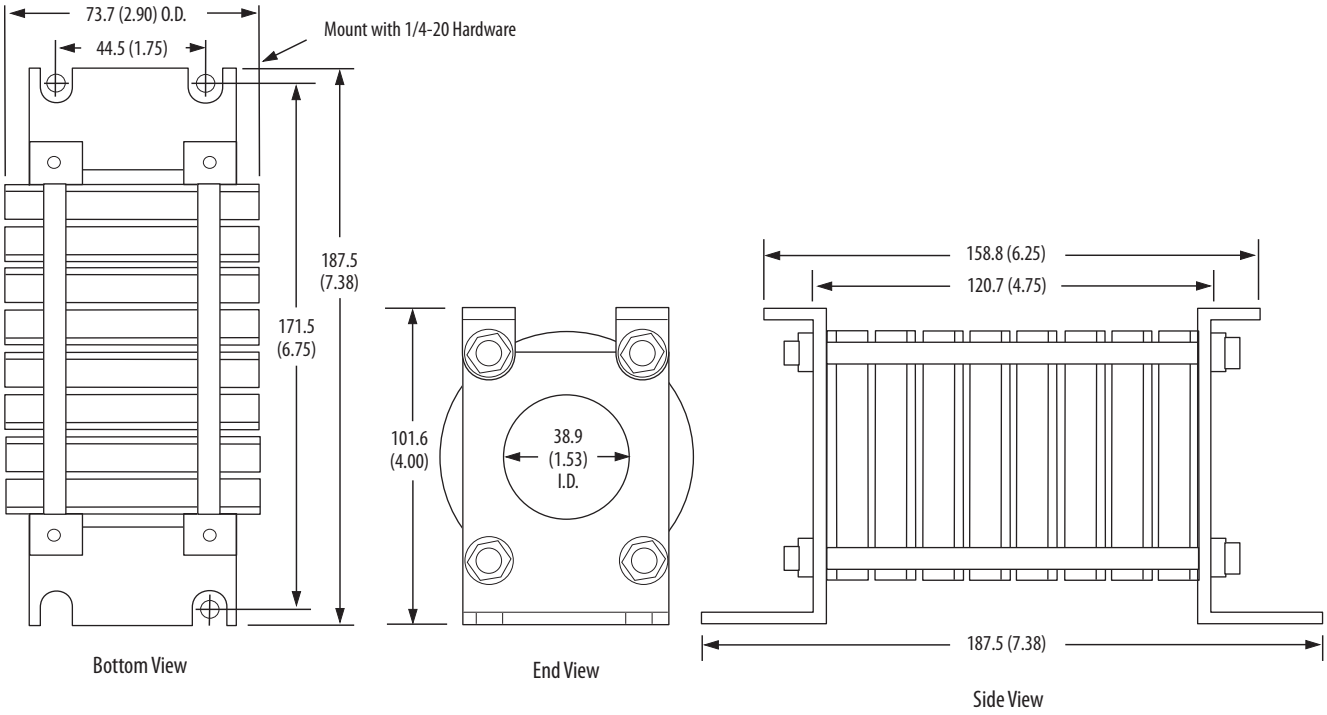

1321-M670

Dimensions are in mm (in.)

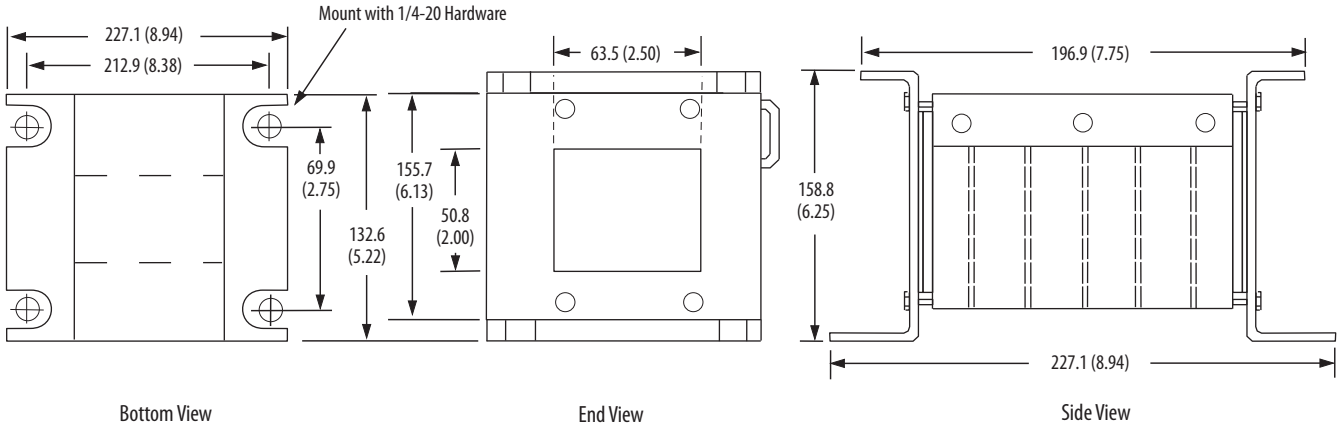

1321-DC DC Link Chokes

1321-DC DC Link Chokes can be installed with Frame C PowerFlex® 40 and all PowerFlex 400 drives. Add DC Link Chokes in series with the internal DC Bus to:

- Reduce AC Input Line Harmonics
- Help meet IEEE-519 limits
- Absorb Voltage/Current Spikes
- Reduce AC Ripple on DC Bus
- Reduce dV/dT and dI/dT rates
- Solve nuisance overvoltage tripping
- Reduce DC Bus Transient Overvoltage

Catalog Number Explanation

Position	1-4	6	7	8	9
	1321	– DC	12	–	1
	a	b	c		d

a

Product	
Code	Type
1321	Power Component

b

Device	
Code	Description
DC	DC Link Choke

c

Current Rating	
Code	Amps
9	9
12	12
18	18
25	25
32	32
40	40

d

Inductance Rating	
Code	Description
1	Each DC Link Choke current rating may have more than one inductance rating. Refer to *Ratings* on page 25 for specific values.
2	
3	
4	

Specifications

Specification	Rating
General	UL-508 component recognized (File E180243)
	1000 Volts DC maximum
	For ripple frequency of 300 Hz or 360 Hz
	50 degrees C temperature rise
	Suitable for 40 degrees C ambient temperature
	Class B insulation system (130 degrees C)
	Suitable for ripple current of 10% peak-to-peak
	Touchsafe terminals in many ratings

Special Features

- Solid copper box lug type terminals on most sizes
- Specially constructed and epoxy impregnated for low noise
- Customized ratings also available - contact the factory for custom mounting, inductance, current or ripple requirements

Ratings

Catalog Number	Type	DC Amps	mH	Watts	Lug Size	Torque
1321-DC9-2	Open Style	9	3.22	7	22-14	4.5
1321-DC12-1	Open Style	12	1	5	22-14	4.5
1321-DC12-2	Open Style	12	2.1	7	18-4	20
1321-DC18-1	Open Style	18	0.65	5	18-4	20
1321-DC18-4	Open Style	18	3.75	17	18-4	20
1321-DC25-4	Open Style	25	1.75	13	18-4	20
1321-DC32-1	Open Style	32	0.85	11	18-4	20
1321-DC32-2	Open Style	32	1.62	14	18-4	20
1321-DC32-3	Open Style	32	2.68	21	18-4	20
1321-DC40-2	Open Style	40	0.75	15	18-4	20
1321-DC40-4	Open Style	40	2	29	18-4	20

Approximate Mounting Dimensions

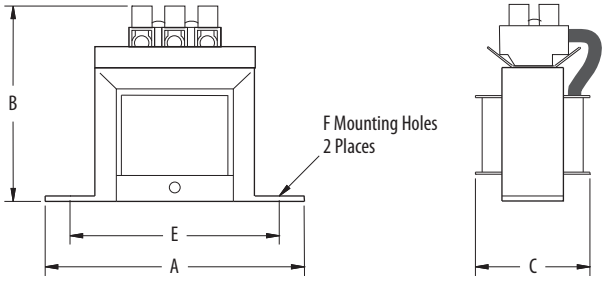

Figure 1

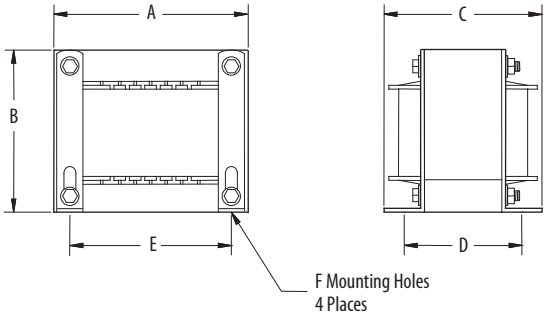

Figure 2

Catalog Number	Figure	Dimensions in mm (in.)					
		A	B	C	D	E	F
1321-DC9-2	1	95.3 (3.75)	82.6 (3.25)	50.8 (2)	(NA)	79.5 (3.13)	47.5 DIA. (0.187 DIA.)
1321-DC12-1	1	95.3 (3.75)	82.6 (3.25)	44.5 (1.75)	(NA)	79.5 (3.13)	47.5 DIA. (0.187 DIA.)
1321-DC12-2	2	96.8 (3.81)	114.3 (4.5)	71.6 (2.82)	50.8 (2)	79.5 (3.13)	5.2 x 8.3 (0.203 x 0.328)
1321-DC18-1	1	95.3 (3.75)	82.6 (3.25)	50.8 (2)	(NA)	79.5 (3.13)	47.5 DIA. (0.187 DIA.)
1321-DC18-4	2	117.6 (4.63)	133.4 (5.25)	101.6 (4)	63.5 (2.5)	95.3 (3.75)	5.2 x 8.3 (0.203 x 0.328)
1321-DC25-4	2	96.8 (3.81)	114.3 (4.5)	76.2 (3)	63.5 (2.5)	79.5 (3.13)	5.2 x 8.3 (0.203 x 0.328)
1321-DC32-1	2	96.8 (3.81)	114.3 (4.5)	84.3 (3.32)	63.5 (2.5)	79.5 (3.13)	5.2 x 8.3 (0.203 x 0.328)
1321-DC32-2	2	117.6 (4.63)	133.4 (5.25)	108.0 (4.25)	76.2 (3)	95.3 (3.75)	5.2 x 8.3 (0.203 x 0.328)
1321-DC32-3	2	117.6 (4.63)	133.4 (5.25)	133.4 (5.25)	101.6 (4)	95.3 (3.75)	5.2 x 8.3 (0.203 x 0.328)
1321-DC40-2	2	96.8 (3.81)	114.3 (4.5)	95.3 (3.75)	76.2 (3)	79.5 (3.13)	5.2 x 8.3 (0.203 x 0.328)
1321-DC40-4	2	165.1 (6.5)	166.4 (6.55)	152.4 (6)	85.9 (3.38)	134.9 (5.31)	7.1 x 13.2 (0.28 x 0.52)

Important User Information

Solid-state equipment has operational characteristics differing from those of electromechanical equipment. Safety Guidelines for the Application, Installation and Maintenance of Solid State Controls (publication SGI-1.1 available from your local Rockwell Automation sales office or online at http://www.rockwellautomation.com/literature/) describes some important differences between solid-state equipment and hard-wired electromechanical devices. Because of this difference, and also because of the wide variety of uses for solid-state equipment, all persons responsible for applying this equipment must satisfy themselves that each intended application of this equipment is acceptable.

In no event will Rockwell Automation, Inc. be responsible or liable for indirect or consequential damages resulting from the use or application of this equipment.

The examples and diagrams in this publication are included solely for illustrative purposes. Because of the many variables and requirements associated with any particular installation, Rockwell Automation, Inc. cannot assume responsibility or liability for actual use based on the examples and diagrams.

No patent liability is assumed by Rockwell Automation, Inc. with respect to use of information, circuits, equipment, or software described in this manual.

Reproduction of the contents of this manual, in whole or in part, without written permission of Rockwell Automation, Inc., is prohibited.

Documentation Feedback

Your comments will help us serve your documentation needs better. If you have any suggestions on how to improve this document, complete this form, publication RA-DU002, available at http://www.rockwellautomation.com/literature/.

Allen-Bradley, Rockwell Software, Rockwell Automation, and LISTEN. THINK. SOLVE are trademarks of Rockwell Automation, Inc.
Trademarks not belonging to Rockwell Automation are property of their respective companies.

Rockwell Otomasyon Ticaret A.Ş., Kar Plaza İş Merkezi E Blok Kat:6 34752 İçerenköy, İstanbul, Tel: +90 (216) 5698400

www.rockwellautomation.com

Power, Control and Information Solutions Headquarters
Americas: Rockwell Automation, 1201 South Second Street, Milwaukee, WI 53204-2496 USA, Tel: (1) 414.382.2000, Fax: (1) 414.382.4444
Europe/Middle East/Africa: Rockwell Automation NV, Pegasus Park, De Kleetlaan 12a, 1831 Diegem, Belgium, Tel: (32) 2 663 0600, Fax: (32) 2 663 0640
Asia Pacific: Rockwell Automation, Level 14, Core F, Cyberport 3, 100 Cyberport Road, Hong Kong, Tel: (852) 2887 4788, Fax: (852) 2508 1846

Publication 1321-TD001O-EN-P - September 2012
Supersedes Publication 1321-TD001N-EN-P - October 2008

Copyright © 2012 Rockwell Automation, Inc. All rights reserved. Printed in the U.S.A.

User Manual

Allen-Bradley

Dual-Port EtherNet/IP Communication Adapter

Catalog Number 20-COMM-ER

Important User Information

Solid state equipment has operational characteristics differing from those of electromechanical equipment. *Safety Guidelines for the Application, Installation and Maintenance of Solid State Controls* (Publication SGI-1.1 available from your local Rockwell Automation sales office or online at http://www.rockwellautomation.com/literature) describes some important differences between solid state equipment and hard-wired electromechanical devices. Because of this difference, and also because of the wide variety of uses for solid state equipment, all persons responsible for applying this equipment must satisfy themselves that each intended application of this equipment is acceptable.

In no event will Rockwell Automation, Inc. be responsible or liable for indirect or consequential damages resulting from the use or application of this equipment.

The examples and diagrams in this manual are included solely for illustrative purposes. Because of the many variables and requirements associated with any particular installation, Rockwell Automation, Inc. cannot assume responsibility or liability for actual use based on the examples and diagrams.

No patent liability is assumed by Rockwell Automation, Inc. with respect to use of information, circuits, equipment, or software described in this manual.

Reproduction of the contents of this manual, in whole or in part, without written permission of Rockwell Automation, Inc. is prohibited.

Throughout this manual, when necessary we use notes to make you aware of safety considerations.

WARNING: Identifies information about practices or circumstances that can cause an explosion in a hazardous environment, which may lead to personal injury or death, property damage, or economic loss.

Important: Identifies information that is critical for successful application and understanding of the product.

ATTENTION: Identifies information about practices or circumstances that can lead to personal injury or death, property damage, or economic loss. Attentions help you identify a hazard, avoid a hazard, and recognize the consequences.

Shock Hazard labels may be located on or inside the equipment (e.g., drive or motor) to alert people that dangerous voltage may be present.

Burn Hazard labels may be located on or inside the equipment (e.g., drive or motor) to alert people that surfaces may be at dangerous temperatures.

Allen-Bradley, Rockwell Software, and TechConnect are trademarks of Rockwell Automation, Inc.

Trademarks not belonging to Rockwell Automation are property of their respective companies.

Preface

About This Manual 7
Conventions Used in This Manual 7
Rockwell Automation Support 8
Additional Resources 8

Chapter 1

Getting Started

Components 11
Features 12
Compatible Products 13
Required Equipment 13
Equipment Shipped with the Adapter 13
User-Supplied Equipment 13
Safety Precautions 15
Quick Start 16

Chapter 2

Installing the Adapter

EMC Conformance 17
Preparing for an Installation 18
Setting the Web Pages Switch 19
Connecting the Adapter to the Drive or SMC 20
Connecting the Adapter to the Network 23
Applying Power 24
Start-Up Status Indications 24
Configuring and Verifying Key Drive Parameters 26
Commissioning the Adapter 26

Chapter 3

Configuring the Adapter

Configuration Tools 27
Using the PowerFlex 7-Class HIM 28
Using an LED HIM 28
Using an LCD HIM 28
Using BOOTP 29
Configure the Adapter Using a BOOTP Server 29
Setting the IP Address, Subnet Mask, and Gateway Address 32
Disable the BOOTP Feature 32
Set an IP Address Using Parameters 32
Set a Subnet Mask Using Parameters 33
Set a Gateway Address Using Parameters 33
Setting the Data Rate 34
Setting the I/O Configuration 35
Selecting Master-Slave or Peer-to-Peer 36
Setting a Master-Slave Hierarchy 36
Setting the Adapter to Transmit Peer-to-Peer Data 37
Setting the Adapter to Receive Peer-to-Peer Data 38
Setting the Reference Adjustment 41
Setting a Fault Action 41

Changing the Fault Action 42
Setting the Fault Configuration Parameters 42
Setting Web Access Control 42
Resetting the Adapter 43
Viewing the Adapter Status Using Parameters 44
Updating the Adapter Firmware 44

Chapter 4

Configuring the I/O

Using RSLinx Classic Software 47
ControlLogix Controller Example 48
Adding the Bridge to the I/O Configuration 49
Using RSLogix 5000 Device Add-on Profiles, Version 16.00 or Later 51
Using the RSLogix 5000 Classic Profile, Versions 13.00...15.00 . . . 60
Using the RSLogix 5000 Generic Profile, All Versions 62
Limitations Using a MicroLogix 1100/1400 Controller 68
MicroLogix 1100/1400 Controller Example 68
Configuring Parameters for Network I/O 69
Creating RSLogix 500 Project, Version 7.00 or Later 70

Chapter 5

Using the I/O

About I/O Messaging 79
Understanding the I/O Image 80
ControlLogix Controller Image 80
MicroLogix 1100/1400 Controller Image 82
Using Logic Command/Status 84
Using Reference/Feedback 84
PowerFlex 7-Class Drives 85
Using Datalinks 86
Rules for Using Datalinks 86
Using 16-Bit Datalinks to Read/Write 32-Bit Parameters 86
Example Ladder Logic Program Information 87
Functions of the Example Programs 87
Logic Command/Status Words 88
ControlLogix Controller Example 88
Creating Ladder Logic Using the RSLogix 5000 Device Add-on Profiles, Version 16.00 or Later 88
Creating Ladder Logic Using the RSLogix 5000 Classic Profile, Versions 1300...15.00 89
Creating Ladder Logic Using the RSLogix 5000 Generic Profile, All Versions 90
MicroLogix 1100/1400 Controller Example 96
Drive and Adapter Parameter Settings 96
Understanding Controller Data Table Addresses 97

Chapter 6

Using Explicit Messaging

About Explicit Messaging 106
Performing Explicit Messages 106
ControlLogix Controller Examples 108
Explicit Messaging Using RSLogix 5000 Software, Version 15.00 or Later 108
Explicit Messaging Using RSLogix 5000 Software, All Versions.. 121
MicroLogix 1100/1400 Controller Examples..... 124
MicroLogix 1100/1400 Controller Explicit Messaging Using the Read/Write Parameter Service..... 125
MicroLogix 1100/1400 Controller Explicit Messaging Using the Generic Get/Set Attribute Service 130

Chapter 7

Troubleshooting

Understanding the Status Indicators..... 143
Port Status Indicator 144
Network Status Indicator..... 145
Link (LS1, LS2) Status Indicator 145
NET A Status Indicator 145
Hardware Reset via Node Switches 146
Viewing Adapter Diagnostic Items..... 146
Viewing and Clearing Events..... 149

Chapter 8

Viewing the Adapter Web Pages

Accessing the Adapter Web Home Page..... 153
Viewing the Web Pages 153
Title Bar on Adapter Web Pages 154
Navigation Pane on Adapter Web Pages..... 155
Process Display Home Page 156
Browse DPI Device Folder 156
Diagnostics Web Page 157
Diagnostic Overview link 157
Network Setting Link..... 158
EtherNet/IP Statistics Link 159
Ring Statistics link..... 159
Crash Display Link 160
Heap Statistics Display link 160
Administrative Web Pages 160
Device Identity Link 161
Network Configuration Link 161
Email Configuration Link..... 162
Password Configuration 165

Chapter 9

Using the Adapter in a DPI External Comms Kit (20-XCOMM-DC-BASE)

Installing the Adapter 167

Appendix A

Specifications

Communications. 169
Electrical 169
Mechanical 170
Environmental. 170
Regulatory Compliance. 170

Appendix B

Adapter Parameters

About Parameter Numbers. 171
Parameter List 171

Appendix C

EtherNet/IP Objects

Supported Data Types 182
Identity Object. 182
Assembly Object 183
Register Object. 184
Parameter Object 185
Parameter Group Object. 188
Device Level Ring Object 189
Quality of Service Object 190
PCCC Object 190
DPI Device Object 196
DPI Parameter Object 198
DPI Fault Object. 204
DPI Alarm Object. 206
DPI Diagnostic Object 207
DPI Time Object 209
TCP/IP Interface Object 211
Ethernet Link Object. 213

Appendix D

Logic Command/Status Words

PowerFlex 70/70EC, PowerFlex 700/700VC, and PowerFlex 700H Drives 215
Logic Command Word 215
Logic Status Word. 216
PowerFlex 700S Drives 217
Logic Command Word (Phase II Control) 217
Logic Status Word (Phase II Control) 218
SMC Flex Controllers /SMC-50 Controllers 219
Logic Status Word. 219
Logic Command Word (Control) 220

Glossary. 221

Index 231

Preface

About This Manual

Topic	Page
Conventions Used in This Manual	7
Rockwell Automation Support	7
Additional Resources	8

This manual provides information about the adapter and using it with PowerFlex 7-Class (Architecture-Class) drives or Bulletin 150 SMC Soft Starters. The adapter can be used with other products that support a DPI™ adapter, such as the DPI External Comms Kit (20-XCOMM-DC-BASE). See the documentation for your product for specific information about how it works with the adapter.

Conventions Used in This Manual

The following conventions are used throughout this manual:

- Parameter names are shown in the format **Parameter xx - [*]**. The xx represents the parameter number. The * represents the parameter name—for example **Parameter 01 - [DPI Port]**.
- Menu commands are shown in bold type face and follow the format **Menu > Command**. For example, if you read 'Select **File > Open**', you should click the **File** menu and then click the **Open** command.
- The firmware revision number (FRN) is displayed as FRN *X.xxx*, where '*X*' is the major revision number and '*xxx*' is the minor revision number.
- The screen images in this manual resulted from using the following software:
  - RSLinx® Classic software, version 2.51
  - RSLogix 5000 software, version 16

  Different versions of the software may have screens that vary in appearance, and differences in procedures.

Rockwell Automation Support

Rockwell Automation offers support services worldwide, with over 75 sales and support offices, over 500 authorized distributors, and over 250 authorized systems integrators located through the United States alone. In addition, Rockwell Automation representatives are in every major country in the world.

Local Product Support

Contact your local Rockwell Automation representative for the following:

- Sales and order support
- Product technical training

- Warranty support
- Support service agreements

Technical Product Assistance

For technical assistance, please review the information in Chapter 7, Troubleshooting, first. If you still have problems, then access the Allen-Bradley Technical Support website at www.ab.com/support/abdrives or contact Rockwell Automation.

Additional Resources

These documents contain additional information concerning related products from Rockwell Automation.

Resource	Description
Industrial Automation wiring and grounding guidelines, publication 1770-4.1	Provides general guidelines for installing a Rockwell Automation industrial system.
Product certifications website, http://www.ab.com	Provides declarations of conformity, certificates, and other certification details.
Industrial Security Best Practices, publication SECUR-AT001	Provides further information and guidelines on product and system security.
PowerFlex 7-Class DPI (Drive Peripheral Interface) Network Communication Adapter Installation Instructions, publication 20COMM-IN004	Information on the installation of PowerFlex® 20-COMM-x Network Communication Adapters.
EtherNet/IP Media Planning and Installation Manual, ODVA publication 148 (1)	Information on the planning, installation, and techniques used to implement an EtherNet/IP network.
EtherNet/IP Network Infrastructure Guidelines, ODVA publication 35 (1)	
Ethernet Design Considerations Reference Manual, publication ENET-RM002	
Connected Components Workbench website http://www.ab.com/support/abdrives/webupdate/software.html, and online help	Information on the Connected Components Workbench™ software tool—and includes a link for **free** software download.
PowerFlex 20-HIM-A3/-A5/-C3S/-C5S HIM Quick Reference, publication 20HIM-QR001	Information on the use of the PowerFlex 20-HIM-A3, 20-HIM-A5, 20-HIM-C3S, and 20-HIM-C5S HIMs.
PowerFlex 20-HIM-A6/-C6S HIM (Human Interface Module) User Manual, publication 20HIM-UM001	Information on the installation and use of the PowerFlex 20-HIM-A6 and 20-HIM-C6S HIMs.
PowerFlex 70 User Manual, publication 20A-UM001 PowerFlex 70/700 Reference Manual, publication PFLEX-RM001 PowerFlex 70EC/700VC Reference Manual, publication PFLEX-RM004	Information on installing, programming, and technical data of PowerFlex 70 and PowerFlex 70EC drives.
PowerFlex 700 Series A User Manual, publication 20B-UM001 PowerFlex 700 Series B User Manual, publication 20B-UM002 PowerFlex 70/700 Reference Manual, publication PFLEX-RM001 PowerFlex 70EC/700VC Reference Manual, publication PFLEX-RM004	Information on installing, programming, and technical data of PowerFlex 700/700VC Series A and PowerFlex 700VC Series B drives.
PowerFlex 700H Installation Instructions, publication PFLEX-IN006 PowerFlex 700H Programming Manual, publication 20C-PM001	Information on installing, programming, and technical data of PowerFlex 700H drives.

Resource	Description
PowerFlex 700S w/Phase I Control Installation Manual (Frames 1…6), publication 20D-IN024 PowerFlex 700S w/Phase I Control Installation Manual (Frames 9 and 10), publication PFLEX-IN006 PowerFlex 700S w/Phase I Control User Manual (All Frame Sizes), publication 20D-UM001 PowerFlex 700S w/Phase I Control Reference Manual, publication PFLEX-RM002 PowerFlex 700S w/Phase II Control Installation Manual (Frames 1…6), publication 20D-IN024 PowerFlex 700S w/Phase II Control Installation Manual (Frames 9…14), publication PFLEX-IN006 PowerFlex 700S w/Phase II Control Programming Manual (All Frame Sizes), publication 20D-PM001 PowerFlex 700S w/Phase II Control Reference Manual, publication PFLEX-RM003	Information on installing, programming, and technical data of PowerFlex 700S drives.
PowerFlex 700L User Manual, publication 20L-UM001	Information on installing, programming, and technical data of PowerFlex 700L Liquid-Cooled AC drives.
SMC Flex Smart Motor Controller User Manual, publication 150-UM008	Information on installing, programming, and technical data of SMC Flex State Smart Motor Controller.
SMC-50 Solid-State Smart Motor Controller User Manual, publication 150-UM011	Information on installing, programming, and technical data of SMC-50 Solid-State Smart Motor Controller.
PowerFlex Digital DC Drive User Manual, publication 20P-UM001	Information on installing, programming, and technical data of PowerFlex Digital DC drives.
Getting Results with RSLinx Guide, publication LINX-GR001and online help (1)	Information on using RSLinx Classic software.
RSLogix Emulate 5/500 Getting Results Guide, publication EMULAT-GR002 and online help	Information on how to install and navigate the RSLogix Emulate software for ladder logic programming with Allen-Bradley® PLC-5® and SLC™ 500 processors.
RSLogix 500 Getting Results Guide, publication LG500-GR002 and online help (1)	Information on using RSLogix 500 software tool.
RSLogix 5000 PIDE Autotuner Getting Results Guide, publication PIDE-GR001 and online help (1)	Information on using RSLogix 5000 software tool.
EtherNet/IP Modules in Logix5000 Control Systems User Manual, publication ENET-UM001	Information on using the ControlLogix® 1756-ENBT or 1756-EN2T EtherNet/IP communication modules with your Logix5000 controller and communicating with various devices on the EtherNet/IP network.
Enhanced and Ethernet PLC-5 Programmable Controllers User Manual, publication 1785-UM012	Information to help design, operate and maintain an Enhanced and Ethernet PLC-5 programmable controller system.
MicroLogix 1100 Programmable Controllers User Manual, publication 1763-UM001 MicroLogix 1400 Programmable Controllers User Manual, publication 1766-UM001	Information to install, wire, and troubleshoot the MicroLogix™ 1100 and MicroLogix 1400 controllers respectively.
Web Updates http://www.ab.com/support/abdrives/webupdate/	Flash Update Files, Product Help Files, Control Bar Files, GSD Files, EDS File links, DriveTools SP / Drive AOP Database Files, and other downloads to keep your Allen-Bradley brand drive products up to date

(1) Use this link to the ODVA EtherNet/IP library: http://odva.org/Home/ODVATECHNOLOGIES/EtherNetIP/EtherNetIPLibrary/tabid/76/Default.aspx

Documentation can be obtained online at http://literature.rockwellautomation.com. To order paper copies of technical documentation, contact your local Rockwell Automation distributor or sales representative.

To find your local Rockwell Automation distributor or sales representative, visit http://www.rockwellautomation.com/locations.

For information such as firmware updates or answers to drive-related questions, go to the Drives Service & Support web site at http://www.ab.com/support/abdrives and click on the Downloads or Knowledgebase link.

Notes:

Getting Started

The adapter is intended for installation in a PowerFlex 7-Class drive or Bulletin 150 SMC soft starter and is used for network communication.

Topic	Page
Components	11
Features	12
Compatible Products	13
Required Equipment	13
Safety Precautions	15
Quick Start	16

Components

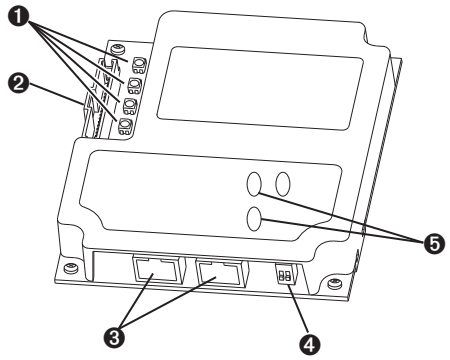

Item	Part	Description
1	Status Indicators	Four status indicators that indicate the status of the DPI, the adapter, and network connection. See Chapter 7, Troubleshooting.
2	DPI Connector	A 20-pin, single-row shrouded male header. An Internal Interface cable is connected to this connector and a connector on the drive.
3	Ethernet Connector	RJ-45 connector for the Ethernet network cable. The connector is CAT-5 compliant to ensure reliable data transfer on 100Base-TX Ethernet connections.
4	Web Pages Switch (SW4)	Enables or disables the adapter web pages. See Setting the Web Pages Switch on page 19.
5	Address/mode switches	Set IP address or DHCP/BootP mode.

Features

The features of the adapter include the following:

- Typical mounting in a PowerFlex 7-Class drive or SMC soft starter.
- Captive screws to secure and ground the adapter to the drive.
- Compatibility with various configuration tools to configure the adapter and connected host drive, including the following tools:
  - PowerFlex HIM (Human Interface Module) on the drive or SMC, if available
  - Connected Components Workbench software, version 1.02 or later
  - DriveExplorer software, version 2.01 or later
  - DriveExecutive software, version 3.01 or later
  - RSLogix5000 version16 and later with Drives Add-on Profile version 4.05 and later

  Additionally, you can use a BOOTP/DHCP server to configure the network address for the adapter.
- Status indicators that report the status of the drive communications, the adapter, and network. They are visible when the drive cover is open or closed.
- Parameter-configured I/O (Logic Command/Reference and up to four pairs of Datalinks) to accommodate application requirements.
- Explicit Messaging support.
- Master-Slave or Peer-to-Peer hierarchy that can be configured to transmit data to and from either a controller or another PowerFlex drive or SMC on the network.
- User-defined fault actions to determine how the adapter and connected PowerFlex drive respond to the following:
  - I/O messaging communication disruptions (Comm Flt Action)
  - Controllers in idle mode (Idle Flt Action)
- Web pages, viewed by using a web browser, that show information about the adapter, its connected host drive, and DPI devices connected to the drive.
- Configurable e-mail messaging to desired addresses when selected drive faults occur and/or are cleared, and/or when the adapter takes a communication or idle fault action.
- Access to any PowerFlex drive or SMC and its connected peripherals on the network to which the adapter is connected.
- Device Level Ring (DLR) or Star Topology support with Quality of Service (QoS) support.

Compatible Products

At the time of publication, the adapter is compatible with the following products:

- PowerFlex 70/70EC drives
- PowerFlex 700/700VC drives
- PowerFlex 700H drives
- PowerFlex 700S drives
- PowerFlex 7000/7000-2 drives
- PowerFlex 700L drives
- PowerFlex Digital DC drives
- DPI External Comms Kit
- SMC™-50
- SMC™ Flex

Note: The adapter is not compatible with PowerFlex 750 series drives.

Required Equipment

Some of the equipment that is required for use with the adapter is shipped with the adapter, but some you must supply yourself.

Equipment Shipped with the Adapter

When you unpack the adapter, verify that the package includes the following:

- ❑ One 20-COMM-ER EtherNet/IP adapter
- ❑ One 2.54 cm (1 in.) long and one 15.24 cm (6 in.) long Internal Interface cable (only one cable is needed to connect the adapter to the drive; for which cable to use, see Figure 3 - on page 2-21)
- ❑ One PowerFlex 7-Class DPI (Drive Peripheral Interface) Network Communication Adapter Installation Instructions, publication 20COMM-IN004
- ❑ One LED Identification Label for use with Bulletin 150 SMC Flex and Bulletin 700 PowerFlex drives

User-Supplied Equipment

To install and configure the adapter, you must supply the following:

- ❑ A small flathead screwdriver
- ❑ Ethernet cable (for details, see the EtherNet/IP Media Planning and Installation Manual, ODVA publication 148 available on the ODVA website at http://odva.org/Home/ODVATECHNOLOGIES/EtherNetIP/EtherNetIPLibrary/tabid/76/Default.aspx)
- ❑ Ethernet switch (for details, see the Ethernet Design Considerations Reference Manual, publication ENET-RM002)
- ❑ Configuration tool, such as the following:
  - PowerFlex 20-HIM-xx HIM

– Connected Components Workbench software, version 1.02 or later

Connected Components Workbench is the recommended stand-alone software tool for use with PowerFlex drives. You can obtain a **free copy** by:

- Internet download at http://www.ab.com/support/abdrives/webupdate/software.html
- Requesting a DVD at http://www.ab.com/onecontact/controllers/micro800/

Your local distributor may also have copies of the DVD available.

Connected Components Workbench software cannot be used to configure SCANport-based drives or Bulletin 160 drives.

– DriveExplorer software, version 2.01 or later

This software tool has been discontinued and is now available as **freeware** at http://www.ab.com/support/abdrives/webupdate/software.html. There are no plans to provide future updates to this tool and the download is being provided 'as-is' for users that lost their DriveExplorer CD, or need to configure legacy products not supported by Connected Components Workbench software.

– DriveExecutive software, version 3.01 or later

A Lite version of DriveExecutive software ships with RSLogix 5000, RSNetWorx MD, FactoryTalk AssetCentre, and ItelliCENTER software. All other versions are purchasable items:

- 9303-4DTE01ENE Drive Executive software
- 9303-4DTS01ENE DriveTools SP Suite (includes DriveExecutive and DriveObserver software)
- 9303-4DTE2S01ENE DriveExecutive software upgrade to DriveTools SP Suite (adds DriveObserver software)

DriveExecutive software updates (patches, and so forth) can be obtained at http://www.ab.com/support/abdrives/webupdate/software.html. It is highly recommended that you periodically check for and install the latest update.

– BOOTP server, version 2.1 or higher, for network setup only

❑ Controller configuration software, such as RSLogix 5/500/5000

❑ A computer connection to the EtherNet/IP network

Safety Precautions

Please read the following safety precautions carefully.

ATTENTION: Risk of injury or death exists. The PowerFlex drive may contain high voltages that can cause injury or death. Remove all power from the PowerFlex drive or SMC, and then verify power has been discharged before installing or removing an adapter.

ATTENTION: Risk of injury or equipment damage exists. Only personnel familiar with drive and power products and the associated machinery should plan or implement the installation, start up, configuration, and subsequent maintenance of the product using an adapter. Failure to comply may result in injury and/or equipment damage.

ATTENTION: Risk of equipment damage exists. The adapter contains electrostatic discharge (ESD) sensitive parts that can be damaged if you do not follow ESD control procedures. Static control precautions are required when handling the adapter. If you are unfamiliar with static control procedures, see Guarding Against Electrostatic Damage, publication 8000-4.5.2.

ATTENTION: Risk of injury or equipment damage exists. If the adapter is transmitting control I/O to the drive, the drive may fault when you reset the adapter. Determine how your drive will respond before resetting an adapter.

ATTENTION: Risk of injury or equipment damage exists. **Parameters 21 - [Comm Flt Action]**, **24 - [Idle Flt Action]**, and **43 - [Peer Flt Action]** let you determine the action of the adapter and connected drive if communication is disrupted or the controller is idle. By default, these parameters fault the drive. You may configure these parameters so that the drive continues to run, however, precautions should be taken to ensure that the settings of these parameters do not create a risk of injury or equipment damage. When commissioning the drive, verify that your system responds correctly to various situations (for example, a disconnected cable or a controller in idle state).

ATTENTION: Risk of injury or equipment damage exists. When a system is configured for the first time, there may be unintended or incorrect machine motion. Disconnect the motor from the machine or process during initial system testing.

ATTENTION: Risk of injury or equipment damage exists. The examples in this publication are intended solely for purposes of example. There are many variables and requirements with any application. Rockwell Automation, Inc. does not assume responsibility or liability (to include intellectual property liability) for actual use of the examples shown in this publication.

Quick Start

This section is provided to help experienced users quickly start using the adapter. If you are unsure how to complete a step, refer to the referenced chapter.

Step	Action	See
1	Review the safety precautions for the drive or SMC	Drive or SMC User Manual
2	Review the safety precautions for the adapter	Throughout this manual
3	Verify that the power control device is properly installed.	Drive or SMC User Manual
4	Install the adapter. a. Verify that the power control device is not powered. b. Connect the adapter to the device with the Internal Interface cable. c. Use the captive screws to secure and ground the adapter to the device. d. Connect the adapter to the network with an Ethernet cable. **NOTE:** When installing the adapter in the DPI External Comms Kit—see the 20-XCOMM-DC-BASE Installation Instructions, publication 20COMM-IN001, supplied with the kit.	PowerFlex 7-Class DPI Network Communication Adapter Installation Instructions, publication 20COMM-IN004, and Chapter 2, Installing the Adapter
5	Apply power to the adapter. a. Verify that the adapter is installed correctly. b. The adapter receives power from the drive or SMC. Apply power to the device. The status indicators should be green. If they flash red, there is a problem. See Chapter 7, Troubleshooting. c. Configure and verify key drive or SMC parameters.	Chapter 2, Installing the Adapter
6	Configure the adapter for your application. Set adapter parameters for the following functions as required by your application: • IP address, subnet mask, and gateway address • Data rate • I/O configuration • Master-Slave or Peer-to-Peer hierarchy • Fault actions	Chapter 3, Configuring the Adapter
7	Configure the controller to communicate with the adapter. Use a controller configuration tool, such as RSLogix software, to configure the master on the network to recognize the adapter and drive or SMC.	Chapter 4, Configuring the I/O
8	Create a ladder logic program. Use a controller configuration tool, such as RSLogix software, to create a ladder logic program that enables you to do the following: • Control the connected device, via the adapter, by using I/O. • Monitor or configure the device or SMC by using explicit messages.	Chapter 5, Using the I/O Chapter 6, Using Explicit Messaging

Installing the Adapter

This chapter provides instructions for installing the adapter in a PowerFlex 7-Class drive.

Topic	Page
Preparing for an Installation	18
Setting the Web Pages Switch	19
Connecting the Adapter to the Drive or SMC	20
Connecting the Adapter to the Network	23
Applying Power	24
Commissioning the Adapter	26

EMC Conformance

For all PowerFlex 70 and 700 drive installations that require CE conformance per EN61800-3, a ferrite core must be installed on each EtherNet/IP cable connected to the drive.

These ferrites are not required for installation on SMC products.

A ferrite core such as FAIR-RITE part number 2643803802 needs to be installed according to the following diagram.

Note: the cable is wrapped 4 times around each core.

Figure 1 - Ferrite Core Installation

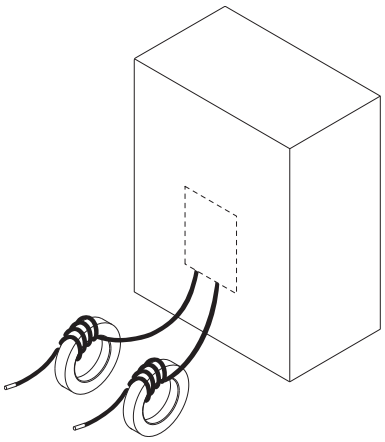

Preparing for an Installation

Before installing the adapter, do the following:

- Make sure the Ethernet switch is the correct type. A 'managed' switch that supports IGMP snooping is usually recommended. An 'unmanaged' switch can be used instead if RSLogix 5000 software, version 18.00 or later, is used and all devices on the network are configured for 'unicast' I/O. For more details, see the following documents:
  - EtherNet/IP Media Planning and Installation Manual, ODVA publication 148
  - EtherNet/IP Network Infrastructure Guidelines, ODVA publication 35
  - Ethernet Design Considerations Reference Manual, publication ENET-RM002

- Understand IGMP Snooping/Ethernet Switches

  The 20-COMM-ER adapter is a multicast device. In most situations, an IGMP snooping (managed) switch is required. If more than one or two 20-COMM-ER adapters are connected to the switch, a managed switch is required—otherwise the drive may fault on a DPI Port x network loss. The 20-COMM-ER, RSLogix 5000 software, version 18.00 or later, and a ControlLogix or CompactLogix controller will support unicast. Unicast setup is required when adding the drive to the I/O. When all adapters are set up as unicast devices, then an IGMP snooping (managed) switch is not needed.

  Much of EtherNet/IP implicit (I/O) messaging uses IP multicast to distribute I/O control data, which is consistent with the CIP producer/consumer model. Historically, most switches have treated multicast packets the same as broadcast packets. That is, all multicast packets are re-transmitted to all ports.

  IGMP snooping constrains the flooding of multicast traffic by dynamically configuring switch ports so that multicast traffic is forwarded only to ports associated with a particular IP multicast group.

  Switches that support IGMP snooping (managed switches) 'learn' which ports have devices that are part of a particular multicast group and only forward the multicast packets to the ports that are part of the multicast group.

  Be careful as to what level of support a switch has of IGMP snooping. Some layer 2 switches that support IGMP snooping require a router (which could be a layer 3 switch) to send out IGMP polls to learn what devices are part of the multicast group. Some layer 2 switches can use IGMP snooping without a router sending polls. If your control system is a standalone network or is required to continue performing if the router is out of service, make sure the switch you are using supports IGMP snooping without a router being present.

- See Appendix A for the number of CIP connections supported by the 20-COMM-ER adapter.
- Verify that you have all required equipment. See Required Equipment on page 13.

Setting the Web Pages Switch

To use the adapter web pages, the Web Pages Switch must be set to its 'Enable Web' position. For information to enable or disable web pages for an adapter, see Setting Web Access Control on page 42.

ATTENTION: Risk of equipment damage exists. The adapter contains electrostatic discharge (ESD) sensitive parts that can be damaged if you do not follow ESD control procedures. Static control precautions are required when handling the adapter. If you are unfamiliar with static control procedures, see Guarding Against Electrostatic Damage, publication 8000-4.5.2.

Important: A new switch setting is recognized only when power is applied to the adapter, or the adapter is reset. If you change a switch setting, cycle power or reset the adapter to apply the change.

Set the Web Pages Switch (SW4 in Figure 2) to enable or disable the adapter web pages. By default, the adapter web pages are disabled. For complete details on adapter web pages, see Viewing the Adapter Web Pages on page 153.

Figure 2 - Setting Web Pages Switch (only Series B Adapter)

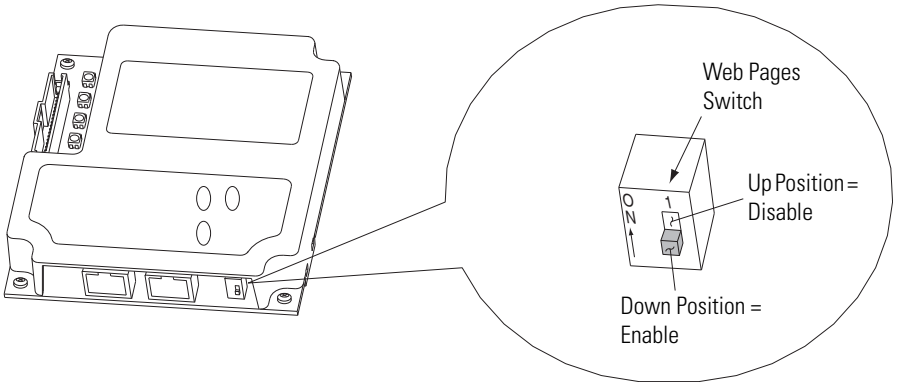

Setting	Description
Down (OFF) position	Web server enabled
Up (ON) position	Web server disabled (as shipped)

Connecting the Adapter to the Drive or SMC

ATTENTION: Risk of injury or death exists. The PowerFlex drive or SMC may contain high voltages that can cause injury or death. Remove **ALL** power from the drive or SMC, and then verify power has been discharged before installing or removing the adapter.

1. Remove **ALL** power from the drive or SMC.
2. Use static control precautions.
3. Remove the drive or SMC cover or open the drive door.
4. Connect the Internal Interface cable to the DPI port on the drive and then to the DPI connector on the adapter (see Figure 3).
5. Secure and ground the adapter to the drive or SMC (see Figure 4) by doing the following:
   - On a PowerFlex 70 drive, fold the Internal Interface cable behind the adapter and mount the adapter on the drive using the four captive screws.
   - On an SMC Flex, put the wire lug between the mounting screw and 20-COMM-ER board

Important: Tighten all screws to properly ground the adapter. Recommended torque is 0.9 N•m (8.0 lb•in).

Figure 3 - DPI Ports and Internal Interface Cables

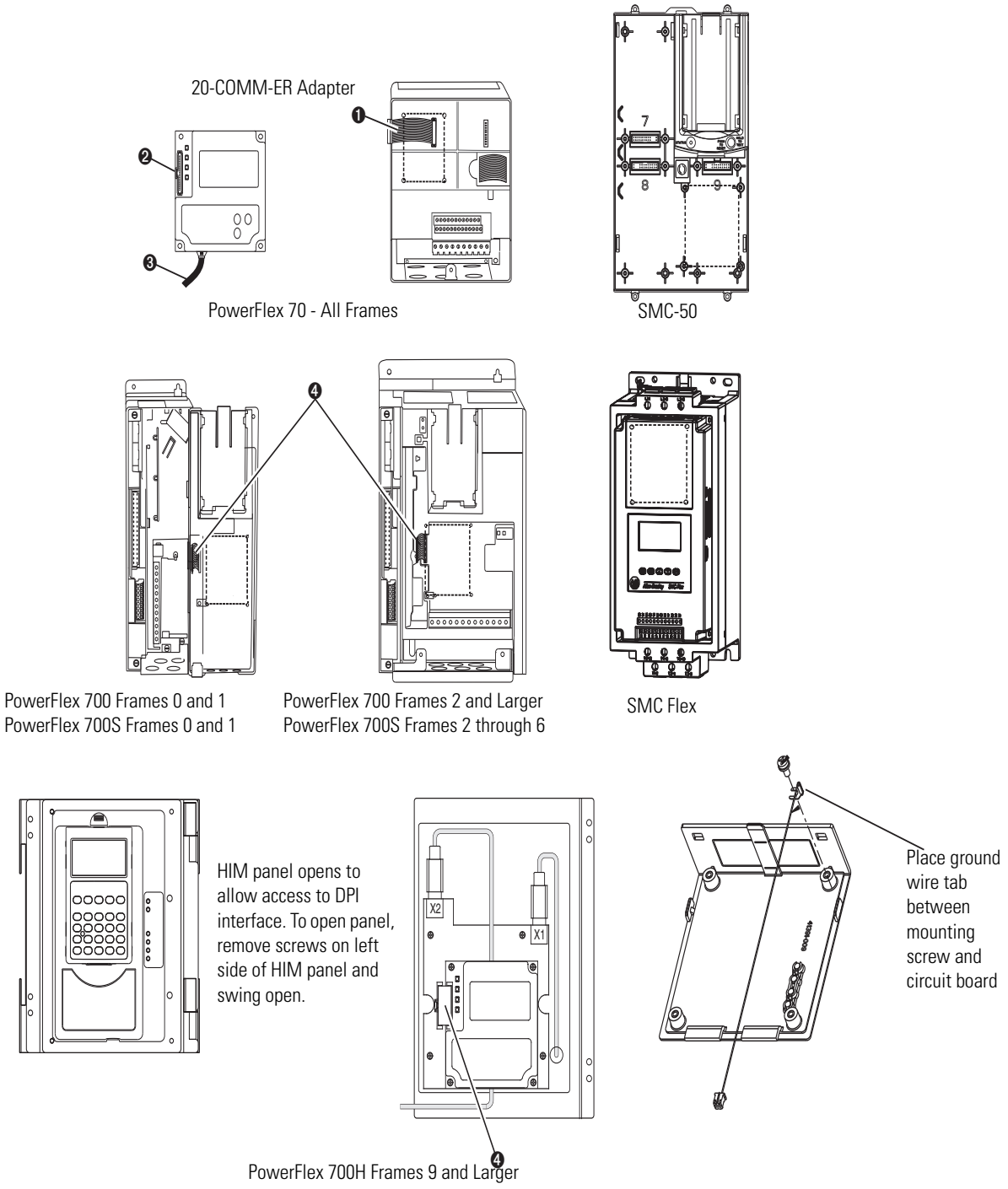

Item	Description
❶	15.24 cm (6 in.) Internal Interface cable
❷	DPI Connector
❸	Ethernet cable
❹	2.54 cm (1 in.) Internal Interface cable

Figure 4 - Mounting and Grounding the Adapter

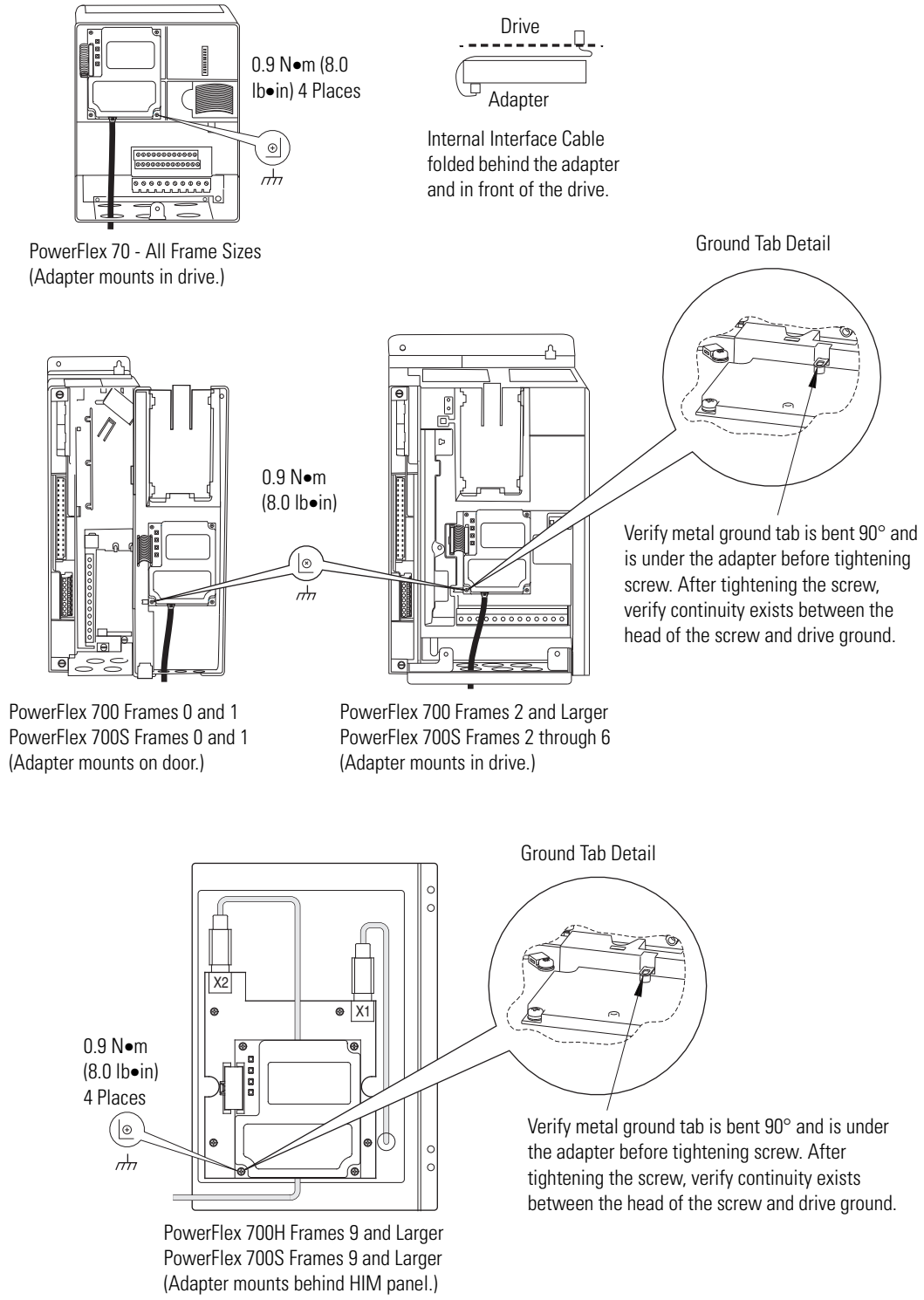

Connecting the Adapter to the Network

ATTENTION: Risk of injury or death exists. The PowerFlex drive may contain high voltages that can cause injury or death. Remove power from the drive, and then verify power has been discharged before installing or removing the adapter.

1. Remove power from the drive.
2. Use static control precautions.
3. Connect one end of an Ethernet cable to the network. See Figure 5 for an example of wiring to an EtherNet/IP network.

Figure 5 - Connecting the Ethernet Cable in a Linear Topology Network

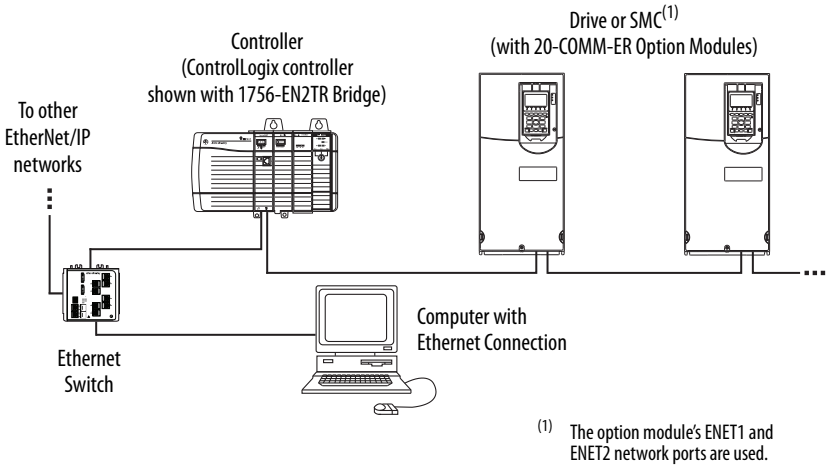

Figure 6 - Connecting the Ethernet Cable in a DLR Topology Network

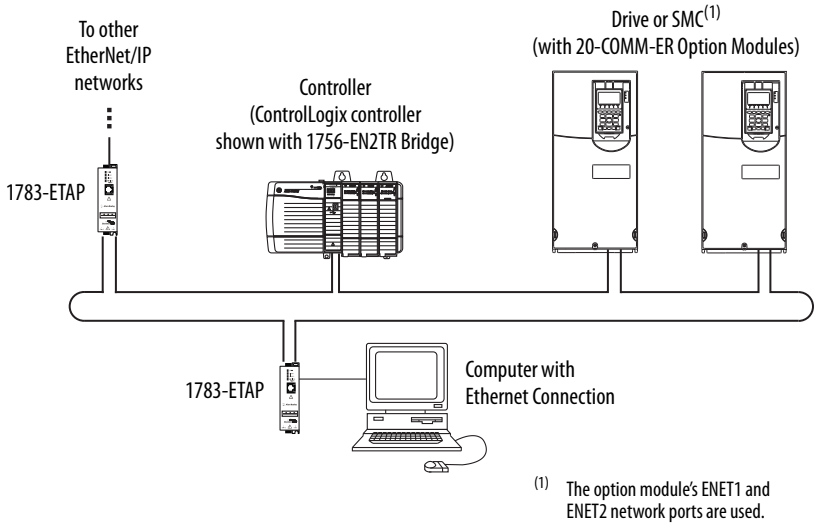

4. For Linear or DLR Network Topology, route the other end of the Ethernet cable from the network through the bottom of the first drive, and insert its cable plug into the option module ENET1 network port.

To connect to the second drive, attach another Ethernet cable between the first drive's option module ENET2 network port and the second drive's option module ENET1 network port.

To connect additional drives, repeat these daisy-chain connections in the same way.

5. Route the other end of the Ethernet cable through the bottom of the PowerFlex drive (Figure 4) and insert its Ethernet cable plug into the mating adapter receptacle.

Applying Power

ATTENTION: Risk of equipment damage, injury, or death exists. Unpredictable operation may occur if you fail to verify that parameter settings are compatible with your application. Verify that settings are compatible with your application before applying power to the drive.

Install the device cover or close the drive door, and apply power to the device. The adapter receives its power from the connected device. When you apply power to the adapter for the first time, its topmost PORT status indicator should be steady green or flashing green after an initialization. If it is red, there is a problem. See Chapter 7, Troubleshooting.

Start-Up Status Indications

After power has been applied, the status indicators for the device and communications adapter can be viewed on the front of the device (Figure 7). Possible start-up status indications are shown in Table 1.

Figure 7 - Drive and Adapter Status Indicators (location will vary by device)

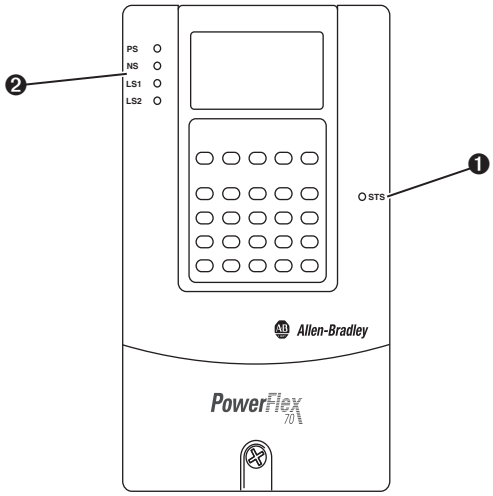

Table 1 - Drive and Adapter Start-Up Status Indications

Item	Name	Color	State	Description
			Drive STS Indicator	
❶	STS (Status) refer to drive or SMC manual for status indication information)	Green	Flashing	Device ready but not running, and no faults are present.
			Steady	Device running, no faults are present.
		Yellow	Flashing, device stopped	An inhibit condition exists – the drive cannot be started. Check device Parameter 214 - [Start Inhibits].
			Flashing, device running	An intermittent type 1 alarm condition is occurring. Check device Parameter 211 - [Drive Alarm 1].
			Steady, device running	A continuous type 1 alarm condition exists. Check device Parameter 211 - [Drive Alarm 1].
		Red	Flashing	A fault has occurred.
			Steady	A non-resettable fault has occurred.
			Adapter Status Indicators	
❷	PS	Off	Steady	No power
		Orange	Flashing	Requesting DPI I/O Connections
			Steady	Peripheral is Connected to an incompatible product or no DPI ping events are detected.
		Green	Flashing	Normal Operation (DPI connected) - No I/O, or PLC in Program
			Steady	Normal Operation (DPI connected) - I/O Operational
		Red	Flashing	DPI Problem, Bad CRC of Adapter Parameters or Flash Program
			Steady	DPI Failure or Failed power-on diagnostic test (hardware failure)
		Green/ Red	Flashing	Flash update in progress
	NS	Off	Steady	No power OR no IP Address
		Green	Flashing	An IP address is configured, but no CIP connections are established, and an Exclusive Owner connection has not timed out
			Steady	At least one CIP connection (any transport class) is established, and an Exclusive Owner connection has not timed out
		Red	Flashing	Connection has timed out see the “The EtherNet Adaptation of CIP” Specification sections 9-4.4 for detailed behavior description
			Steady	Duplicate IP Address detected
		Orange	Steady	Adapter Failure (used in conjunction with PS orange)
		Green/ Red	Flashing	Self-test on power up
	LS1	Off	Steady	No Network Activity
		Green	Flashing	Network activity at 100 Mbps
		Yellow	Flashing	Network activity at 10 Mbps
	LS2	Off	Steady	No Network Activity
		Green	Flashing	Network activity at 100 Mbps
		Yellow	Flashing	Network activity at 10 Mbps

After verifying correct operation, close or install the drive cover. For more details on status indicator operation, see page 144 and page 145.

Configuring and Verifying Key Drive Parameters

The PowerFlex 7-Class drive can be separately configured for the control and Reference functions in various combinations. For example, you could set the drive to have its control come from a peripheral or terminal block with the Reference coming from the network. Or you could set the drive to have both its control and Reference come from the network.

The following steps in this section assume that the drive will receive the Logic Command and Reference from the network.

1. Use drive Parameter 090 - [Speed Ref A Sel] to set the drive speed Reference to '22' (DPI Port 5).
2. If hard-wired discrete digital inputs are not used to control the drive, verify that unused digital input drive Parameters 361 - [Dig In1 Sel] and 362 - [Dig In2 Sel] are set to '0' (Not Used).
3. Verify that drive Parameter 213 - [Speed Ref Source] is reporting that the source of the Reference to the drive is '22' (DPI Port 5).

   This ensures that any Reference commanded from the network can be monitored by using drive Parameter 002 - [Commanded Speed]. If a problem occurs, this verification step provides the diagnostic capability to determine whether the drive/adapter or the network is the cause.

Commissioning the Adapter

To commission the adapter, you must set a unique IP address on the network. After installing the adapter and applying power, you can set the IP address by using a BOOTP/DHCP server or adapter parameters. See Setting the IP Address, Subnet Mask, and Gateway Address on page 32 for details.

By default, the adapter is configured so that you must set the IP address using a BOOTP/DHCP server or by setting the adapter to a valid address, 1-254, via the rotary switches on the adapter. An invalid address 0 or >254 will cause the module to defer to the addressing mode selected by parameter 3 [BOOTP/DHCP]. If disabled, the adapter will use the address information stored in the adapters database. If that address is invalid, the adapter will try to contact a DHCP server on the network. To use adapter parameters, you must disable the BOOTP feature. For details, see Disable the BOOTP Feature on page 32.

Important: New settings for some adapter parameters (for example, **Parameters 04 - [IP Addr Cfg 1]** through **07 - [IP Addr Cfg 4]**) are recognized only when power is applied to the adapter or it is reset. After you change parameter settings, cycle power or reset the adapter.

Configuring the Adapter

This chapter provides instructions and information for setting the parameters in the adapter.

Topic	Page
Configuration Tools	27
Using the PowerFlex 7-Class HIM	28
Using BOOTP	29
Setting the IP Address, Subnet Mask, and Gateway Address	32
Setting the Data Rate	34
Setting the I/O Configuration	35
Selecting Master-Slave or Peer-to-Peer	36
Setting the Reference Adjustment	41
Setting a Fault Action	41
Setting Web Access Control	42
Resetting the Adapter	43
Viewing the Adapter Status Using Parameters	44
Updating the Adapter Firmware	44

For a list of parameters, see Appendix B, Adapter Parameters. For definitions of terms in this chapter, see the .

Configuration Tools

The adapter stores parameters and other information in its own nonvolatile storage (NVS) memory. You must, therefore, access the adapter to view and edit its parameters. The following tools can be used to access the adapter parameters.

Tool	See
PowerFlex 7-Class HIM	page 28
BOOTP/DHCP server	page 29
Connected Components Workbench software, version 1.02 or later	http://www.ab.com/support/abdrives/webupdate/software.html, or online help (installed with the software)

Using the PowerFlex 7-Class HIM

If your drive has either an LED or LCD HIM (Human Interface Module), it can be used to access parameters in the adapter as shown below. It is recommended that you read through the steps for your HIM before performing the sequence. For additional information, see the drive documentation or the PowerFlex 7-Class HIM Quick Reference, publication 20HIM-QR001.

Using an LED HIM

Step	Example Screens
1. Press the ALT key and then the Device Sel (Sel) key to display the Device Screen. 2. Press the ▲ or ▼ key to scroll to the adapter. Letters represent files in the drive, and numbers represent ports. The adapter is usually connected to port 5. The adapter is usually connected to port 5. 3. Press the ↵ (Enter) key to enter your selection. A parameter database is constructed, and then the first parameter is displayed. 4. Edit the parameters using the same techniques that you use to edit drive parameters.	

Using an LCD HIM

Step	Example Screens
1. In the main menu, press the ▲ or ▼ key to scroll to **Device Select**. 2. Press the ↵ (Enter) key to enter your selection. 3. Press the ▲ or ▼ key to scroll to the adapter (20-COMM-ER). 4. Press the ↵ (Enter) key to select the adapter. A parameter database is constructed, and then the main menu for the adapter is displayed. 5. Edit the parameters using the same techniques that you use to edit drive parameters.	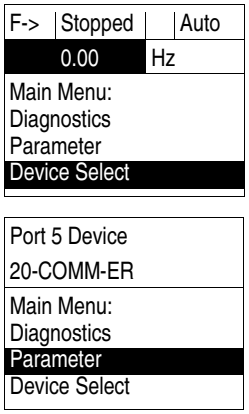

NOTE: All configuration procedures throughout this chapter use the PowerFlex 7-Class LCD HIM to access parameters in the adapter and show example LCD HIM screens.

TIP When using a PowerFlex 20-HIM-A6 or 20-HIM-C6S HIM, see its User Manual, publication 20-HIM-UM001.

SMC Flex controllers require an external HIM (A3 or A6) to program the adapter. The internal Human Interface of the SMC Flex does not allow programming of the Adapter.

Using BOOTP

The IP address, subnet mask and gateway address can be configured multiple ways depending on the setting of the three rotary switches on the adapter. The switches are read on power up or reset.

1. If the switches are set to an address from 1...254, that value will be used as the LSB of the IP address 192.168.1.xxx
2. If the switches are set to an invalid number (000 or a value greater than 254), the unit will check if DHCP is enabled. If DHCP is enabled, the unit requests an address from a DHCP server.
   If DHCP is not enabled and switches are set to an illegal value, the adapter will use the IP address (along with other TCP configurable parameters) stored in nonvolatile memory. If the unit finds that the stored IP configuration is not usable (set to 0), then the unit will revert to the out-of-box behavior of DHCP being enabled.
3. Any other switch setting will cause the adapter to use the IP address data set in the adapter's database parameters.

By default, the adapter is configured so that you can set its IP address, subnet mask, and gateway address by using a BOOTP or a DHCP server. There is a variety of BOOTP servers available. The following instructions use Rockwell Automation's BOOTP Server, version 2.3 or later, a **free** standalone program that incorporates the functionality of standard BOOTP utilities with a graphical interface. It is available from http://www.software.rockwell.com/support/download/detail.cfm?ID=3390. See the Readme file and online Help for directions and more information.

TIP If desired, you can disable BOOTP and configure the IP address, subnet mask, and gateway address with adapter parameters. For details, see Setting the IP Address, Subnet Mask, and Gateway Address on page 32.

Configure the Adapter Using a BOOTP Server

1. On the adapter label, note the adapter's hardware Ethernet Address (MAC), which will be used in step 6.
2. On a computer connected to the EtherNet/IP network, start the BOOTP software.

The BOOTP Server window appears.

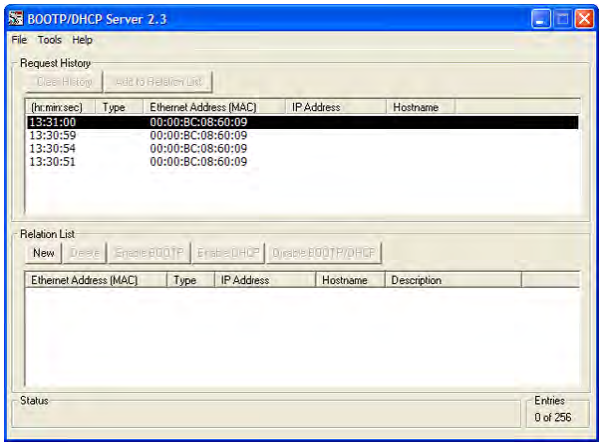

3. Select **Tools > Network Settings** to display the Network Settings window.

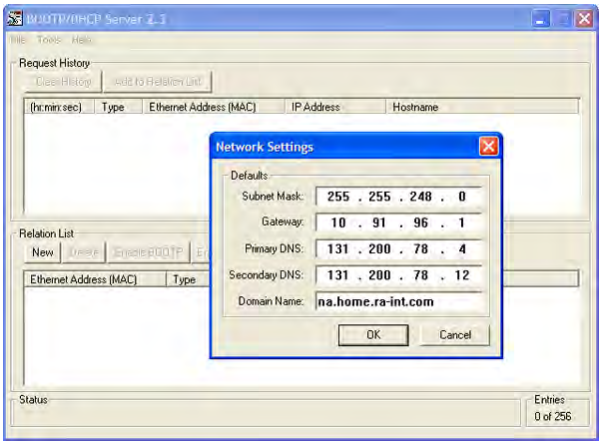

To properly configure devices on your EtherNet/IP network, you must configure settings in the BOOTP software to match the network.

4. Edit the following:

Box	Type
Subnet Mask (1)	The subnet mask for the adapter's network.
Gateway (1)	The IP address of the gateway device on the adapter's network.
Primary DNS	The address of the primary DNS server to be used on the local end of the link for negotiating with remote devices.
Secondary DNS	Optional — the address of the secondary DNS server to be used on the local end of the link for negotiating with remote devices when the primary DNS server is unavailable.
Domain Name	The text name corresponding to the numeric IP address that was assigned to the server that controls the network.

(1) For definitions of these terms, refer to the .

5. Click **OK** to apply the settings.

Devices on the network issuing BOOTP requests appear in the BOOTP Request History list.

6. In the BOOTP Request History list, either double-click the adapter's Ethernet Address (MAC) noted in Step 1, or click **New** in the Relation List.

   The New Entry dialog box appears.

   In the first case, the Ethernet Address (MAC) is automatically entered. In the latter case, you must manually enter it.

7. Edit the following:

Box	Type
IP Address	A unique IP address for the adapter
Host Name	Optional
Description	Optional

8. Click **OK** to apply the settings.

   The adapter appears in the Relation List with the new settings.

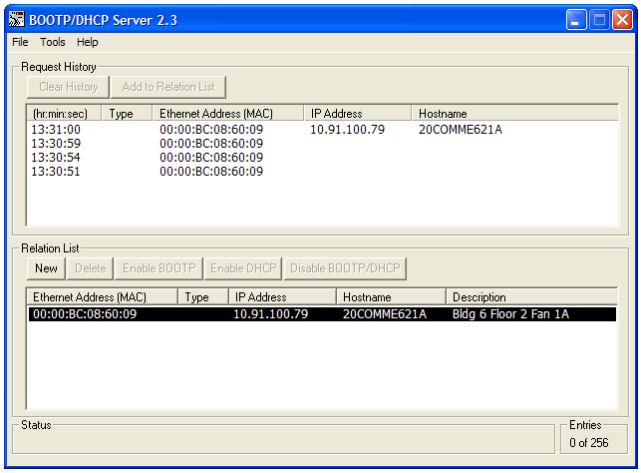

9. To assign this configuration to the adapter permanently, select the device in the Relation List and click **Disable BOOTP/DHCP**.

   When power is cycled on the adapter, it will use the configuration you assigned it and not issue new BOOTP requests.

TIP To enable BOOTP for an adapter that has had BOOTP disabled, first select the adapter in the Relation List, then click **Enable BOOTP**, and lastly reset the adapter or power cycle the drive.

10. Select **File > Save** to save the Relation List.

Setting the IP Address, Subnet Mask, and Gateway Address

By default, the adapter is configured so that you set its IP address, subnet mask, and gateway address using a BOOTP/DHCP server. To use adapter parameters instead, you must disable BOOTP/DHCP and then set the associated adapter parameters.

The IP address can be set using the rotary switches on the adapter to an address from 1...254 that will be used as the lower byte of the IP address 192.168.1.xxx. The Subnet mask will be set to 255.255.255.0.

If the rotary switches are set to any invalid address (0 or >254), the address programmed in the adapter's internal data base will be used.

Disable the BOOTP Feature

1. Set the value of **Parameter 03 - [BOOTP/DHCP]** to '0' (Disabled).

Port 5 Device
20-COMM-ER
Parameter #: 03 BOOTP 0 Disabled

Value	Setting
0	Disabled
1	Enabled (Default)

Note: The internal port used by the adapter is different for different products. The examples here show port 5, used by the SMC Flex and drive products. The SMC-50 uses port 4.

2. Reset the adapter; see Resetting the Adapter on page 43.

After disabling the BOOTP/DHCP feature, you can then configure the IP address, subnet mask, and gateway address using adapter parameters.

Set an IP Address Using Parameters

1. Verify that **Parameter 03 - [BOOTP/DHCP]** is set to '0' (Disabled).

2. Set the value of **Parameters 04 - [IP Addr Cfg 1]** through **07 - [IP Addr Cfg 4]** to a unique IP address.

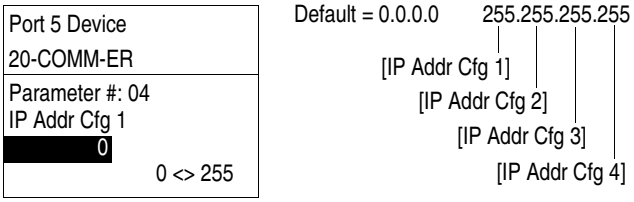

3. Reset the adapter; see Resetting the Adapter on page 43.

The Network status indicator will be steady green or flashing green if the IP address is correctly configured, and is connected to an operating ethernet network.

Set a Subnet Mask Using Parameters

1. Verify that **Parameter 03 - [BOOTP/DHCP]** is set to '0' (Disabled).
2. Set the value of **Parameters 08 - [Subnet Cfg 1]** through **11 - [Subnet Cfg 4]** to the desired value for the subnet mask.

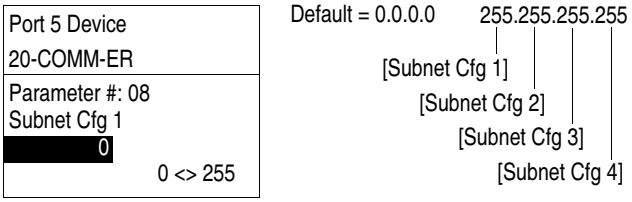

3. Reset the adapter; see Resetting the Adapter on page 43.

Set a Gateway Address Using Parameters

1. Verify that **Parameter 03 - [BOOTP]** is set to '0' (Disabled).
2. Set the value of **Parameters 12 - [Gateway Cfg 1]** through **15 - [Gateway Cfg 4]** to the IP address of the gateway device.

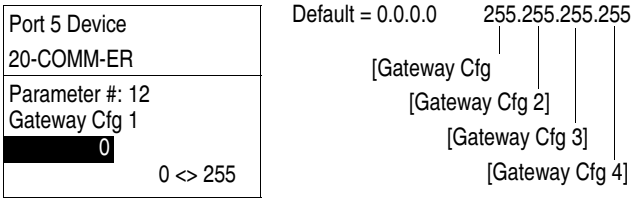

3. Reset the adapter; see Resetting the Adapter on page 43.

Setting the Data Rate

By default, the adapter is set to autodetect, so it automatically detects the data rate and duplex setting used on the network. If you need to set a specific data rate and duplex setting, the value of **Parameter 16 - [EN P1 Rate Config]** determines the Ethernet data rate and duplex setting that the adapter will use to communicate. For definitions of data rate and duplex, see Glossary on page 221.

1. Set the value of **Parameter 16 - [EN P1 Rate Config]** to the data rate at which your network is operating.

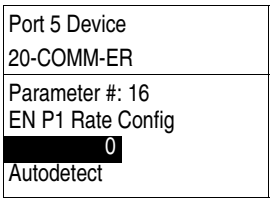

Value	Data Rate
0	Autodetect (default)
1	10 Mbps Full
2	10 Mbps Half
3	100 Mbps Full
4	100 Mbps Half

TIP Auto detection of baud rate and duplex works properly only if the device (usually a switch) on the other end of the cable is also set to automatically detect the baud rate/duplex. If one device has the baud rate/duplex hard-coded, the other device must be hard-coded to the same settings.

2. Reset the adapter; see Resetting the Adapter on page 43.

By default, the adapter is set to autodetect, so it automatically detects the data rate and duplex setting used on the network. If you need to set a specific data rate and duplex setting, the value of **Parameter 18 - [EN P2 Rate Config]** determines the Ethernet data rate and duplex setting that the adapter will use to communicate. For definitions of data rate and duplex, see Glossary on page 221.

1. Set the value of **Parameter 18 - [ENEN P2 Rate Config]** to the data rate at which your network is operating.

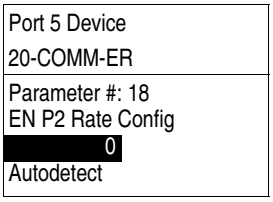

Value	Data Rate
0	Autodetect (default)
1	10 Mbps Full
2	10 Mbps Half
3	100 Mbps Full
4	100 Mbps Half

TIP Auto detection of baud rate and duplex works properly only if the device (usually a switch) on the other end of the cable is also set to automatically detect the baud rate/duplex. If one device has the baud rate/duplex hard-coded, the other device must be hard-coded to the same settings.

2. Reset the adapter; see Resetting the Adapter on page 43.

Setting the I/O Configuration

The I/O configuration determines the data that is sent to and from the drive. Logic Command/Status, Reference/Feedback, and Datalinks may be enabled or disabled. (Datalinks allow you to read/write directly to parameters in the drive using implicit I/O.) A '1' enables the I/O and a '0' disables the I/O.

1. Set the bits in **Parameter 25 - [DPI I/O Cfg]**.

Port 5 Device
20-COMM-ER
Parameter #: 25 DPI I/O Cfg x x x x x x x x x x x 0 0 0 0 **1** Cmd/Ref b00

Bit	Description
0	Logic Command/Reference (Default)
1	Datalink A
2	Datalink B
3	Datalink C
4	Datalink D
5...15	Not Used

   Bit 0 is the right-most bit. It is highlighted above and equals '1'.

2. If a controller is used to control the drive, set adapter **Parameters 37 - [M-S Input]** and **38 - [M-S Output]** for Master-Slave Hierarchy.

   For details, see Setting a Master-Slave Hierarchy (Scanner-to-Drive Communication) on page 36.

3. If Logic Command/Reference is enabled, configure the parameters in the drive to accept the Logic Command and Reference from the adapter.

   For example, set Parameter 90 - [Speed Ref A Sel] in a PowerFlex 70 or 700 drive to '22' (DPI Port 5) so that the drive uses the Reference from the adapter. Also, verify that the mask parameters (for example, Parameter 276 - [Logic Mask]) in the drive are configured to receive the desired logic from the adapter. See the documentation for your drive for details.

   The the SMC devices do not currently use the reference data sent in the IO frame. No reference configuration is required. Refer to the applicable SMC user manual for the latest reference configuration information.

4. If you enabled one or more Datalinks, configure parameters in the drive to determine the source and destination of data in the Datalink(s).

   When using Datalinks, up to 8 [Data In xx] parameters and/or up to 8 [Data Out xx] parameters must be assigned to point to the appropriate parameters for your application. See Chapter 4 for an example.

5. Reset the adapter; see Resetting the Adapter on page 43.

The adapter is ready to receive I/O. You must now configure the adapter to receive I/O from a master or peer device. See Selecting Master-Slave or Peer-to-Peer. If you select a Master-Slave hierarchy, you must also configure the master to communicate with the adapter. See Chapter 4, Configuring the I/O.

Selecting Master-Slave or Peer-to-Peer

A hierarchy determines the type of device with which the adapter exchanges data. In a Master-Slave hierarchy, the adapter exchanges data with a master, such as a scanner or bridge (1756-ENBT, 1756-EN2T, 1747-L5-xxx, and so forth). In a Peer-to-Peer hierarchy, the adapter exchanges data with one or more EtherNet/IP adapters in other devices. (The devices must have compatible Logic Command/Status words.)

For both Master-Slave and Peer-to-Peer hierarchies, the devices exchanging data must be on the same IP subnet. See 'IP Addresses' in the for information about IP subnets.

Setting a Master-Slave Hierarchy (Scanner-to-Drive Communication)

1. Enable the desired I/O in **Parameter 25 - [DPI I/O Cfg]**.

   See Setting the I/O Configuration on page 35.

2. Set the bits in **Parameter 37 - [M-S Input]**.

   This parameter determines the data received from the master by the device. A '1' enables the I/O and a '0' disables the I/O.

Port 5 Device 20-COMM-ER
Parameter #: 37 M-S Input x x x x x x x x x x x 0 0 0 0 **1** Cmd/Ref b00

Bit	Description
0	Logic Command/Reference (Default)
1	Datalink A Input
2	Datalink B Input
3	Datalink C Input
4	Datalink D Input
5...15	Not Used

   Bit 0 is the right-most bit. It is highlighted above and equals '1'.

3. Set the bits in **Parameter 38 - [M-S Output]**.

   This parameter determines the data transmitted from the device to the scanner. A '1' enables the I/O and a '0' disables the I/O.

Port 5 Device 20-COMM-ER
Parameter #: 38 M-S Output x x x x x x x x x x x 0 0 0 0 **1** Status/Fdbk b00

Bit	Description
0	Status/Feedback (Default)
1	Datalink A Output
2	Datalink B Output
3	Datalink C Output
4	Datalink D Output
5...15	Not Used

   Bit 0 is the right-most bit. It is highlighted above and equals '1'.

4. Reset the adapter; see Resetting the Adapter on page 43.

The adapter is ready to receive I/O from the master (that is, scanner). You must now configure the scanner to recognize and transmit I/O to the adapter. See Chapter 4, Configuring the I/O.

Setting the Adapter to Transmit Peer-to-Peer Data (Drive-to-Drive Communication)

1. Verify that **Parameter 53 - [Peer Out Enable]** is set to '0' (Off).

   This parameter must be Off while you configure peer output parameters.

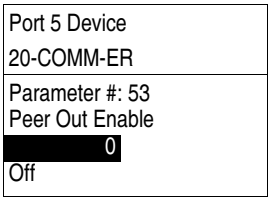

Value	Setting
0	Off (Default)
1	On

2. Set **Parameter 51 - [Peer A Output]** to select the source of the data to output to the network.

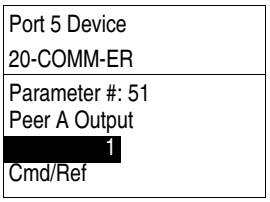

Value	Description
0	Off (Default)
1	Logic Command/Reference
2…5	Datalink A, B, C, or D Input
6…9	Datalink A, B, C, or D Output

3. If desired, set **Parameter 52 - [Peer B Output]** to select an additional source of the data to output to the network.

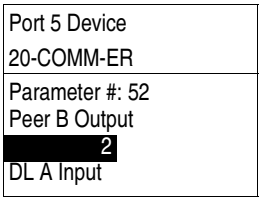

Value	Description
0	Off (Default)
1	Logic Command/Reference
2…5	Datalink A, B, C, or D Input
6…9	Datalink A, B, C, or D Output

4. Set **Parameters 54 - [Peer Out Time]** and **55 - [Peer Out Skip]** to establish the minimum and maximum intervals between peer messages.

Because the adapter transmits peer messages when a change-of-state condition occurs, minimum and maximum intervals are required.

– The minimum interval ensures that the adapter does not transmit messages on the network too often, thus minimizing network traffic. Set it with **Parameter 54 - [Peer Out Time]**.

– The maximum interval ensures that the adapter transmits messages often enough so that the receiving adapter(s) can receive recent data and verify that communications are working or, if communications are not working, can timeout. The maximum interval is the value of **Parameter 54 - [Peer Out Time]** multiplied by the value of **Parameter 55 - [Peer Out Skip]**.

In the example below, the minimum interval is set to 2.00 seconds (**Parameter 54 - [Peer Out Time]**), and the maximum interval is set to 4.00 seconds (2.00 x ‘2’ setting of **Parameter 55 - [Peer Out Skip]**).

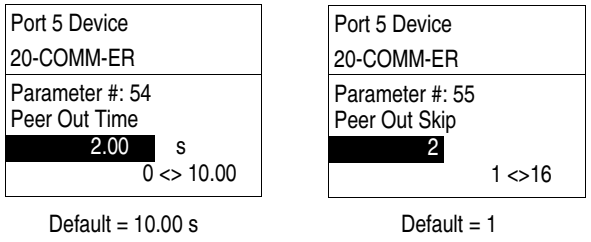

5. Set **Parameter 53 - [Peer Out Enable]** to ‘1’ (On).

The adapter will transmit the data selected in **Parameters 51 - [Peer A Output]** and **52 - [Peer B Output]** to the network. Another adapter must be configured to receive the peer I/O data.

Setting the Adapter to Receive Peer-to-Peer Data

1. Verify that **Parameter 49 - [Peer Inp Enable]** is set to ‘0’ (Off).

This parameter must be Off while you configure the peer input parameters.

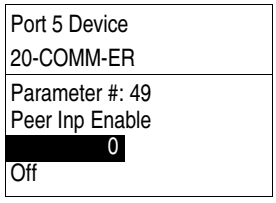

Value	Setting
0	Off (Default)
1	On

2. Set **Parameters 44 - [Peer Inp Addr 1]** through **47 - [Peer Inp Addr 4]** to the IP address of the node from which you want to receive data.

Valid nodes must have 20-COMM-ER adapters connected to drives with compatible Logic Command/Status words.

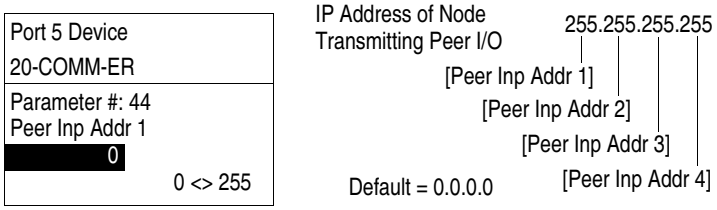

3. Set **Parameter 40 - [Peer A Input]** to select the destination of the data that is input to the drive as Peer A.

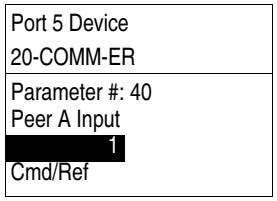

Value	Description
0	Off (Default)
1	Logic Command/Reference
2…5	Datalink A, B, C, or D Input

Data is used from the least significant word in the event of a mismatch in Reference or Datalink sizes.

4. If desired, set **Parameter 41 - [Peer B Input]** to select the destination of the data to input to the device as Peer B.

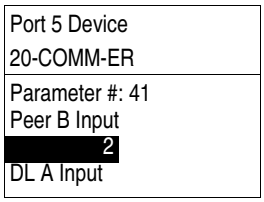

Value	Description
0	Off (Default)
1	Logic Command/Reference
2…5	Datalink A, B, C, or D Input

5. If the adapter receives a Logic Command, set the bits in **Parameter 42 - [Peer Cmd Mask]** that the device should use.

The bit definitions for the Logic Command word will depend on the drive to which the adapter is connected. See Appendix D or the device documentation.

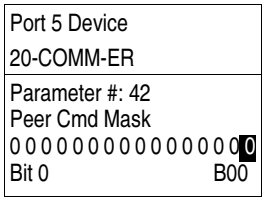

Value	Description
0	Ignore this command bit. (Default)
1	Use this command bit.

If the adapter receives a Logic Command from both a master device and a peer device, each command bit must have only one source. The source of command bits set to ‘0’ will be the master device. The source of command bits set to ‘1’ will be the peer device.

6. Reset the adapter (see Resetting the Adapter on page 43) so that changes to **Parameter 42 - [Peer Cmd Mask]** take effect.
7. Set **Parameter 48 - [Peer Inp Timeout]** to the maximum amount of time the adapter will wait for a message before timing out.

Important: This value must be greater than the product of **Parameter 54 - [Peer Out Time]** multiplied by **Parameter 55 - [Peer Out Skip]** in the adapter from which you are receiving I/O.

For example, if the value of **Parameter 54 - [Peer Out Time]** is 2.00 seconds and the value of **Parameter 55 - [Peer Out Skip]** is 2 (see example screen in step 4 on page 37), then **Parameter 48 - [Peer Inp Timeout]** needs to have a value greater than 4.00, such as 5.00 in the example screen below.

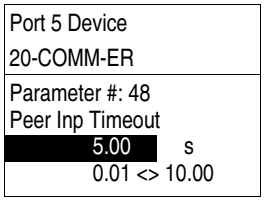

Default = 10.00 s

8. Set **Parameter 43 - [Peer Flt Action]** to the action that the adapter will take if it times out.

ATTENTION: Risk of injury or equipment damage exists. **Parameter 43 - [Peer Flt Action]** lets you determine the action of the adapter and connected device if peer communication is disrupted. By default, this parameter faults the device. You can set this parameter so that the device continues to run, however, precautions should be taken to ensure that the setting of this parameter does not create a hazard of injury or equipment damage. When commissioning the device, verify that your system responds correctly to various situations (for example, a disconnected cable).

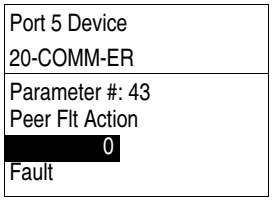

Value	Description
0	Fault (Default)
1	Stop
2	Zero Data
3	Hold Last
4	Send Flt Cfg

For more details, see Setting a Fault Action on page 41.

9. Set **Parameter 49 - [Peer Inp Enable]** to '1' (On).

The adapter is now configured to receive peer I/O from the specified node. Ensure that the specified node is configured to transmit peer I/O.

Setting the Reference Adjustment

A Reference Adjustment is a percent scaling factor for the Reference from the network. It can be set from 0.00...200.00% to allow the drive's Reference to either match the network Reference (= 100.00%), scale below the network Reference (< 100.00%), or scale above the network Reference (> 100.00%).

The SMC controllers do not currently use the reference data sent in the IO frame. No Reference configuration is required. Refer to the applicable SMC user manual for the latest reference configuration information.

ATTENTION: To guard against equipment damage and/or personal injury, note that changes to adapter **Parameter 39 - [Ref Adjust]** take effect immediately. A drive receiving its Reference from the adapter will receive the newly scaled Reference, resulting in a change of speed.

If the adapter is receiving a Reference, set **Parameter 39 - [Ref Adjust]** to the desired scaling factor.

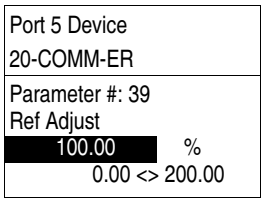

Default = 100.00%

The adjustment takes effect as soon as it is entered.

Setting a Fault Action

By default, when I/O communication is disrupted (for example, a cable is disconnected) or the controller is idle (in program mode or faulted), the drive responds by faulting if it is using I/O from the network. You can configure a different response to these events:

- Disrupted I/O communication by using **Parameter 23 - [Comm Flt Action]**
- An idle controller by using **Parameter 24 - [Idle Flt Action]**

ATTENTION: Risk of injury or equipment damage exists. **Parameters 23 - [Comm Flt Action]** and **24 - [Idle Flt Action]** let you determine the action of the adapter and connected device if I/O communication is disrupted or the controller is idle. By default, these parameters fault the device. You can set these parameters so that the device continues to run, however, precautions should be taken to ensure that the settings of these parameters do not create a risk of injury or equipment damage. When commissioning the device, verify that your system responds correctly to various situations (for example, a disconnected cable or faulted controller).

Changing the Fault Action

Set the values of **Parameters 23 - [Comm Flt Action]** and **24 - [Idle Flt Action]** to any of these desired responses.

Value	Action	Description
0	Fault	The device is faulted and stopped. (Default)
1	Stop	The device is stopped, but not faulted.
2	Zero Data	The device is sent 0 for output data. This does not command a stop.
3	Hold Last	The device continues in its present state.
4	Send Flt Cfg	The device is sent the data that you set in the fault configuration parameters (**Parameters 27 - [Flt Cfg Logic]** through **36 - [Flt Cfg D2 In]**).

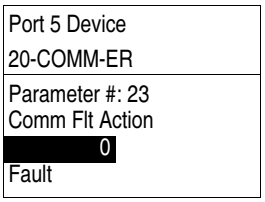

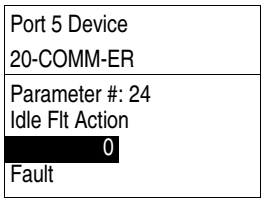

Changes to these parameters take effect immediately. A reset is not required.

If communication is disrupted and then is re-established, the drive will automatically take commands from the network again.

Setting the Fault Configuration Parameters

If you set **Parameter 23 - [Comm Flt Action]** or **24 - [Idle Flt Action]** to 'Send Flt Cfg', the values in the following parameters are sent to the drive after an I/O communications fault and/or idle fault occurs. You must set these parameters to values required by your application.

Parameter	Description
27 - [Flt Cfg Logic]	A 16-bit value sent to the device for Logic Command.
28 - [Flt Cfg Ref]	A 32-bit value (0…4294967295) sent to the device as a Reference or Datalink. **Important:** If the device uses a 16-bit Reference or 16-bit Datalinks, the most significant word of the value must be set to zero (0) or a fault will occur.
29 - [Flt Cfg x1 In] through **36 - [Flt Cfg x2 In]**	

Changes to these parameters take effect immediately. A reset is not required.

Setting Web Access Control

By using a web browser to access the IP address set for the adapter, you can view the adapter's web pages for information about the adapter, its connected device, and other DPI devices connected to the device, such as HIMs or converters. Additionally, the adapter can be configured to automatically send e-mail messages

to desired addresses when selected device faults occur and/or are cleared, and/or when the adapter takes a communication or idle fault action. For more details on the adapter's web pages, refer to Chapter 8, Viewing the Adapter Web Pages.

By default, the adapter web pages are disabled. See Figure 2 and set the Web Pages Switch (SW4) to the 'Enable Web' (up) position. **Parameter 56 [Web Enabled]** reflects the position of the web enable DIP switch on the adapter.

Important: For a change to the switch setting to take effect, the adapter must be reset (see Resetting the Adapter on page 43).

Bit 0 of **Parameter 57 - [Web Features]** is used to protect the configured settings for e-mail messaging. By default, settings are not protected and the user can make changes. To protect the configured settings, set the value of E-mail Cfg Bit 0 to '0' (Disabled). You can unprotect the configuration by changing Bit 0 back to '1' (Enabled). E-mail messaging will always remain active regardless of whether or not its settings are protected—unless e-mail messaging was **never** configured. For more information about configuring adapter e-mail messaging or to stop e-mail messages, see Email Configuration Link on page 162.

Port 5 Device 20-COMM-ER
Parameter #: 57 Web Features x x x x x x x x x x x x x x x **1** E-mail Cfg b00

Bit	Description
0	E-mail Cfg (Default = 0 = Disabled)
1…7	Not Used

Bit 0 is the right-most bit. It is highlighted above and equals '1'.

Changes to this parameter take effect immediately. A reset is not required.

Resetting the Adapter

Changes to switch settings and some adapter parameters require that you reset the adapter before the new settings take effect. You can reset the adapter by power cycling the drive or by using **Parameter 22- [Reset Module]**.

ATTENTION: Risk of injury or equipment damage exists. If the adapter is transmitting control I/O to the drive, the drive may fault when you reset the adapter. Determine how your drive will respond before resetting a connected adapter.

Set **Parameter 22 - [Reset Module]** to '1' (Reset Module).

Port 5 Device 20-COMM-ER
Parameter #: 22 Reset Module **1** Reset Module

Value	Description
0	Ready (Default)
1	Reset Module
2	Set Defaults

When you enter '1' (Reset Module), the adapter will be immediately reset. When you enter '2' (Set Defaults), the adapter will set all adapter parameters to their factory-default values. After performing a Set Defaults, enter '1' (Reset Module) so that the new values take effect. The value of this parameter will be restored to '0' (Ready) after the adapter is reset.

Viewing the Adapter Status Using Parameters

The following parameters provide information about the status of the adapter. You can view these parameters at any time.

Parameter	Description
17 - [EN P1 Rate Act]	The data rate used on port 1 of the adapter
19 - [EN P2 Rate Act]	The data rate used on port 2 of the adapter
20 - [Ref/Fdbk Size]	The size of the Reference/Feedback. It will either be 16 bits or 32 bits. It is set in the device and the adapter automatically uses the correct size.
21 - [Datalink Size]	The size of the Datalinks. It will either be 16 bits or 32 bits. It is set in the device and the adapter automatically uses the correct size.
26 - [DPI I/O Act]	The Reference/Feedback and Datalinks used by the adapter. This value is the same as **Parameter 25 - [DPI I/O Cfg]** unless the parameter was changed and the adapter was not reset. Bit Definition: Not Used | Not Used | Not Used | Datalink D | Datalink C | Datalink B | Datalink A | Cmd/Ref Default: x | x | x | 0 | 0 | 0 | 0 | 1 Bit: 7 | 6 | 5 | 4 | 3 | 2 | 1 | 0 0 = I/O disabled 1 = I/O enabled
50 - [Peer Inp Status]	The status of the consumed peer input connection. Values 0 = Off 1 = Waiting 2 = Running 3 = Faulted

Updating the Adapter Firmware

The adapter firmware can be updated over the network or serially through a direct connection from a computer to the drive using a 1203-USB or 1203-SSS serial converter.

When updating firmware over the network, you can use the Allen-Bradley ControlFLASH software tool, the built-in update capability of DriveExplorer Full software, or the built-in update capability of DriveExecutive software.

When updating firmware through a direct serial connection from a computer to a drive, you can use the same Allen-Bradley software tools described above, or you can use terminal emulation software set to the X-modem protocol.

If using a direct serial connection, you can use DriveExplorer Lite software.

To obtain a firmware update for this adapter, go to http://www.ab.com/support/abdrives/webupdate. This website contains all firmware update files and associated Release Notes that describe the following items:

- Firmware update enhancements and anomalies
- How to determine the existing firmware revision
- How to update firmware using DriveExplorer, DriveExecutive, ControlFLASH, or HyperTerminal software

Configuring the I/O

This chapter provides instructions on how to configure a Rockwell Automation ControlLogix or MicroLogix 1100/1400 controller to communicate with the adapter and connected PowerFlex drive.

Topic	Page
Using RSLinx Classic Software	47
ControlLogix Controller Example	48
MicroLogix 1100/1400 Controller Example	68

Using RSLinx Classic Software

RSLinx Classic software, in all its variations (Lite, Gateway, OEM, and so forth), is used to provide a communication link between the computer, network, and controller. RSLinx Classic software requires its network-specific driver to be configured before communication is established with network devices. To configure the RSLinx driver, follow this procedure.

1. Start RSLinx Classic software and select **Communications > Configure Drivers** to display the Configure Drivers screen.
2. From the Available Driver Types pull-down menu, choose EtherNet/IP Driver.
3. Click **Add New...** to display the Add New RSLinx Driver screen.
4. Use the default name or type a new name and click **OK**. The 'Configure driver:' screen appears.
5. Depending on your application, select either the browse local or remote subnet option.
6. Click **OK**.

The Configure Drivers screen reappears with the new driver in the Configured Drivers list.

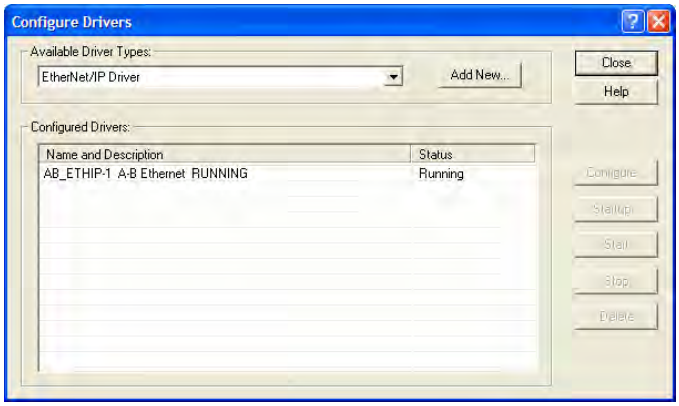

7. Click **Close** to close the Configure Drivers screen.
8. Keep RSLinx running and verify that the computer recognizes the drive.
   a. Select **Communications > RSWho**.
   b. In the menu tree, click '+' next to the Ethernet driver.

   If the 'EtherNet/IP driver' cannot see your drive, as an alternative, use either the 'Ethernet devices' or 'Remote Devices via Linx Gateway' RSLinx driver.

ControlLogix Controller Example

After the adapter is configured, the connected drive and adapter will be a single node on the network. This section provides the steps needed to configure a simple EtherNet/IP network (see Figure 8). In our example, we will configure a ControlLogix controller with 1756-ENBT (Series A) bridge to communicate with a drive using Logic Command/Status, Reference/Feedback, and 16 Datalinks (8 to read and 8 to write) over the network.

Figure 8 - Example ControlLogix EtherNet/IP Network

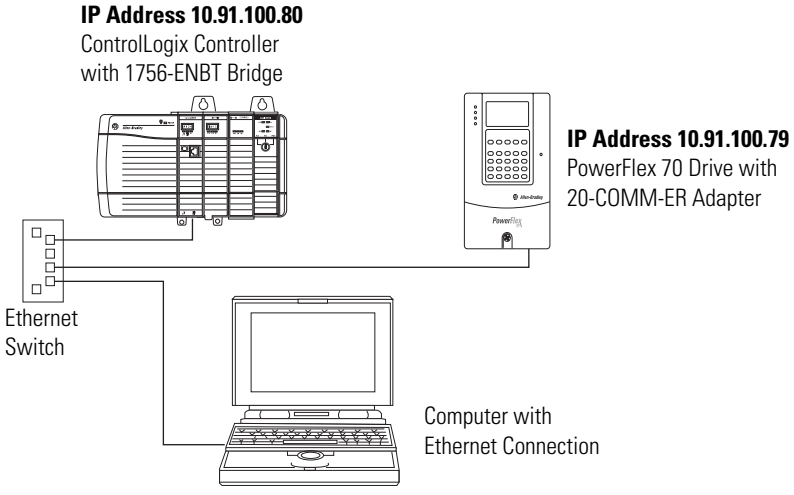

Adding the Bridge to the I/O Configuration

To establish communications between the controller and adapter over the network, you must first add the ControlLogix controller and its bridge to the I/O configuration. This procedure is similar for all RSLogix 5000 versions.

1. Start RSLogix 5000 software.
2. Select **File > New** to display the New Controller screen.

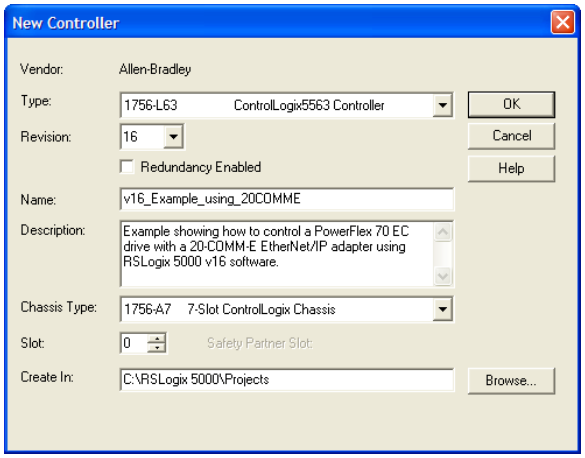

   a. Choose the appropriate choices for the fields in the screen to match your application.
   b. Click **OK**.

      The RSLogix 5000 window reappears with the treeview in the left pane.

3. In the treeview, right-click the I/O Configuration folder and choose **New Module...**

The Select Module screen appears.

4. Expand the Communications group to display all of the available communication modules.

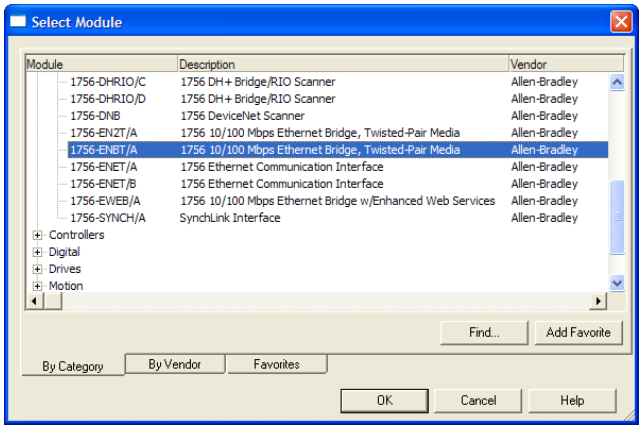

5. In the list, select the EtherNet/IP bridge used by your controller.

In this example, we use a 1756-ENBT EtherNet/IP Bridge (Series A), so the 1756-ENBT/A option is selected.

6. Click **OK**.
7. In the Select Major Revision pop-up dialog box, select the major revision of its firmware.
8. Click **OK**.

The bridge's New Module screen appears.

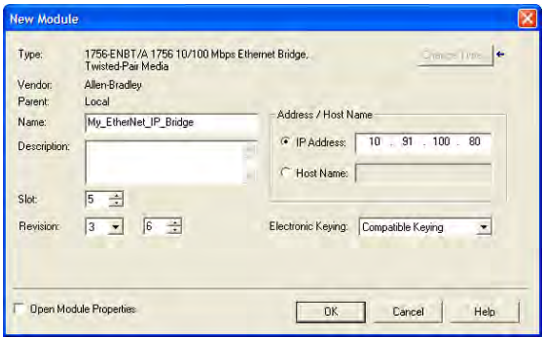

9. Edit the following:

Box	Setting
Name	A name to identify the EtherNet/IP bridge.
Description	Optional – description of the EtherNet/IP bridge.
IP Address	The IP address of the EtherNet/IP bridge.
Host Name	Not used.
Slot	The slot of the EtherNet/IP bridge in the rack.
Revision	The minor revision of the firmware in the bridge. (You already set the major revision by selecting the bridge series in step 5.)
Electronic Keying	**Compatible Keying**. The 'Compatible Keying' setting for Electronic Keying ensures the physical module is consistent with the software configuration before the controller and bridge make a connection. Therefore, be sure that you have set the correct revision in this screen. See the online Help for additional information on this and other Electronic Keying settings. If keying is not required, select 'Disable Keying'. Disable keying is recommended.
Open Module Properties	When this box is checked, clicking **OK** opens additional module properties screens to further configure the bridge. When unchecked, clicking **OK** closes the bridge's New Module screen. For this example, uncheck this box.

10. Click **OK**.

The bridge is now configured for the EtherNet/IP network, added to the RSLogix 5000 project, and appears in the I/O Configuration folder. In our example, a 1756-ENBT bridge appears under the I/O Configuration folder with its assigned name.

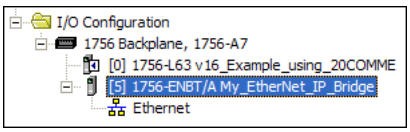

For convenience, keep the project open. Later in this chapter the project will need to be downloaded to the controller.

There are three ways to add the adapter into the I/O configuration:

- Device Add-on Profiles (RSLogix 5000 software, version 16.00 or later)
- Classic Profile (RSLogix 5000 software, versions 13.00...15.00)
- Generic Profile (RSLogix 5000 software, all versions)

These are described in separate sections below. If your version of RSLogix 5000 software supports device Add-on Profiles, we recommend that you use this method.

Using RSLogix 5000 Device Add-on Profiles, Version 16.00 or Later

When compared to using the RSLogix 5000 Classic Profile (versions 13.00...15.00) or Generic Profile (all versions), the RSLogix 5000 device Add-on Profiles provide the following advantages:

- Profiles for specific drives that provide descriptive controller tags for basic control I/O words (Logic Command/Status and Reference/Feedback) **and** Datalinks. Additionally, Datalinks automatically take the name of the drive parameter to which they are assigned. These profiles virtually eliminate I/O mismatch errors and substantially reduce drive configuration time.

- New Drive tab eliminates the need for a separate drive software configuration tool.

- Drive configuration settings are saved as part of the RSLogix 5000 software, version 16.00 or later, project file (.ACD) and also downloaded to the controller.

- Unicast connection (RSLogix 5000 software, version 18.00 or later)

- Device Add-on Profiles can be updated anytime. When a new drive is used or to benefit from new updates for Add-on Profiles, you will need the newest Add-on Profile update. Go to www.ab.com/support/abdrives/webupdate to download the latest RSLogix 5000 device Add-on Profile. To determine your device Add-on Profile version, see Allen-Bradley Knowledgebase document #65882.

Add the Drive/Adapter to the I/O Configuration

To transmit data between the bridge and the drive, you must add the drive as a child device to the parent bridge. In this example, RSLogix 5000 software, version 16.00 is used with device Add-on Profile version 4.05 or later.

1. In the treeview, right-click on the bridge and choose **New Module...** to display the Select Module screen.

   In our example, we right-click on the 1756-ENBT/A bridge. Expand the Drives group to display all of the available drives with their communication adapters.

TIP If the PowerFlex drive is not shown, go to www.ab.com/support/abdrives/webupdate and download the latest RSLogix 5000 device Add-on Profile.

2. From the list, select the drive and its connected adapter.

   For this example, we selected 'PowerFlex 70 EC-E'.

3. Click **OK**.

   The drive's New Module screen appears.

4. On the General tab, edit the following data about the drive/adapter.

Box	Setting
Name	A name to identify the drive.
Description	Optional – description of the drive/adapter.
IP Address	The IP address of the adapter.

5. On the New Module screen in the Module Definition section, click **Change...** to launch the Module Definition screen and begin the drive/adapter configuration process.

   In this example, Datalinks are used to do the following.

Read...	Write to...
Output Current (Parameter 3)	Accel Time 1 (Parameter 140)
DC Bus Voltage (Parameter 12)	Decel Time 1 (Parameter 142)
Fault 1 Code (Parameter 243)	High Resolution Reference (Parameter 308)

TIP To get the latest RSLogix 5000 device Add-on Profile, go to www.ab.com/support/abdrives/webupdate.

6. In the Module Definition screen, edit the following information.

Box	Setting
Revision	The major and minor revision of the firmware (database) in the drive. If the drive's major and minor revision is not available, the drive database is not installed on your computer. To get the correct database revision, use one of the following buttons at the bottom left of the Module Definition screen: • **Create Database:** Creates a database from an online network drive. Clicking this button displays an RSLinx software RSWho window. Browse to the online drive (for this example, PowerFlex 70 EC), select it, and click **OK**. The database will be uploaded and stored on the computer. Thereafter, close the Module Definition screen and then re-open it to display the new revision. • **Web Update:** When a drive is not available online, opens the Allen-Bradley Drives Web Updates website to download a specific database file. After downloading the file, close the Module Definition screen and then re-open it to display the new revision. • **Match Drive:** Use this button when the drive being added to the network matches the drive profile (revision, rating, configuration settings, and so forth) of an existing online network drive. Click this button to conveniently create a duplicate drive profile from the online drive, and automatically load this identical information into the Module Definition screen. This eliminates the need to manually enter the information each time a new drive with a matching profile is added to the network.
Electronic Keying	**Compatible Module**. The 'Compatible Module' setting for Electronic Keying ensures that the physical module is consistent with the software configuration before the controller and bridge make a connection. Therefore, be sure that you have set the correct revision in this screen. See the online Help for additional information on this and other Electronic Keying settings. If keying is not required, select 'Disable Keying'. Drives do not require keying, and so 'Disable Keying' is recommended.
Drive Rating	The voltage and current rating of the drive. If the drive rating is not listed, the drive database is not installed on your computer. To get the correct drive rating, use the **Create Database**, **Web Update**, or **Match Drive** button described above.
Connection	**Parameters via Datalinks.** When selecting 'Parameters via Datalinks' (default), the controller tags for the Datalinks use the drive parameter names to which they are assigned. When selecting 'Datalinks', the controller tags for the Datalinks have non-descriptive UserDefinedData[n] names like those used in RSLogix 5000 software, version 15.00.
Data Format	**Parameters.** When the Connection field is set to 'Parameters via Datalinks', 'Parameters' is automatically selected. When the Connection field is set to 'Datalinks', you must select the number of Datalinks required for your application in the 'Data Format' field.
Datalink A, B, C, D	In the Input Data column, assigns selected drive parameters to be READ by the controller. In the Output Data column, assigns selected drive parameters to be WRITTEN by the controller.
Sort Input/ Output selection…	When this box is checked, sorts the Input Data and Output Data assigned parameters by name and then by number, and enables parameter search by name. When unchecked, sorts the assigned parameters by parameter number and then by name, and enables parameter search by number.
Use Network Reference	Conveniently selects the speed reference for the drive to come from the network. This box is checked by default.

When a 32-bit parameter is selected for Input Data or Output Data for a drive with 16-bit Datalinks, two contiguous Datalinks (for example, x1 and x2, where x = A, B, C or D) are automatically assigned as a pair to

represent that parameter. See Datalink examples in the screen shown on the previous page. For more information on Datalinks, see Using Datalinks on page 86.

On the Module Definition screen, notice that the automatically-assigned controller tags DriveStatus, OutputFreq, DriveLogicRslt, and CommandedFreq are always used.

When a Datalink is enabled, the following 20-COMM-ER adapter I/O parameters are automatically set:

- **Parameter 25 - [DPI I/O Cfg]** turns on the enabled Datalink bit so the 20-COMM-ER adapter will communicate that Datalink's information with the drive.
- **Parameter 37 - [M-S Input]** turns on the enabled Datalink bit so the 20-COMM-ER adapter will input that Datalink's information from the controller.
- **Parameter 38 - [M-S Output]** turns on the enabled Datalink bit so the 20-COMM-ER adapter will output that Datalink's information to the controller.

7. Click **OK** on the Module Definition screen to save the drive and adapter configuration and close the screen.

The drive's New Module screen reappears.

8. On the New Module screen, click the Connection tab.

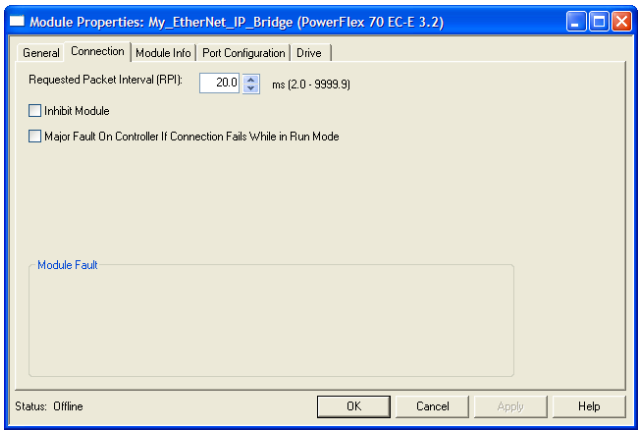

Screen for RSLogix 5000 software, version 16.00 or 17.00

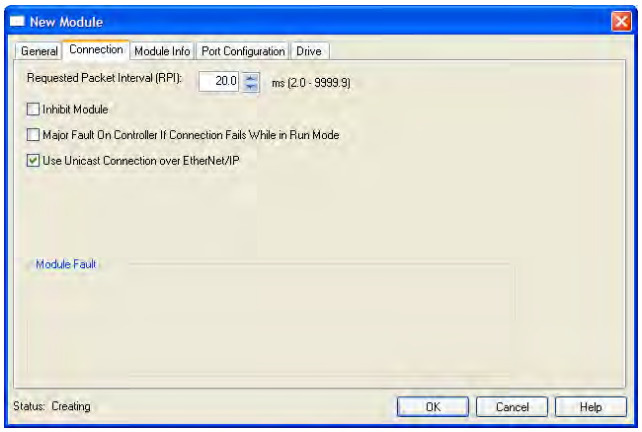

Screen for RSLogix 5000 software, version 18.00 or later

9. In the 'Requested Packet Interval (RPI)' box, set the value to 5.0 milliseconds or greater.

This value determines the maximum interval that a controller should use to move data to and from the adapter. To conserve bandwidth, use higher values for communicating with low priority devices.

The 'Inhibit Module' box, when checked, inhibits the module from communicating with the RSLogix 5000 project. When the 'Major Fault on ...' box is checked, a major controller fault will occur when the module's connection fails while the controller is in the Run Mode. For this example, leave the 'Inhibit Module' and 'Major Fault On ...' boxes unchecked.

Important: Unicast support has been added to RSLogix 5000 software, version 18.00 or later. However, to also support unicast, the controller firmware must be version 18.00 or later. Unicast is recommended whenever possible. For the benefits of unicast operation, see Preparing for an Installation on page 18.

10. On the New Module screen, click the Port Configuration tab.

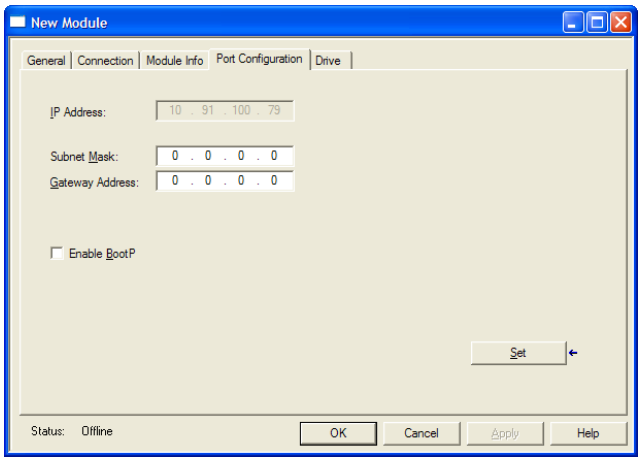

11. In the Port Configuration tab screen, edit the following information.

Box	Setting
IP Address	The IP address of the adapter that was already set in the General tab. This field is not configurable (grayed out).
Subnet Mask	The Subnet Mask configuration setting of the network. This setting must match the setting of other devices on the network (for example, 255.255.255.0).
Gateway Address	The Gateway Address configuration setting of the network. This setting must match the setting of other devices on the network (for example, 10.91.100.1).
Enable BootP	When this box is checked, BOOTP is enabled in the adapter and will ignore the IP address set in the General tab. When unchecked, the controller uses the set IP address. This is another method to enable/disable BOOTP in the adapter. For this example, leave this box unchecked.

12. Click **Set** to save the Port Configuration information which sets the corresponding offline Subnet Cfg x and Gateway Cfg x parameters in the adapter.

13. Click **OK** on the New Module screen.

The new node (‘My_PowerFlex_70_EC_Drive’ in this example) now appears under the bridge (‘My_EtherNet_IP_Bridge’ in this example) in the I/O Configuration folder. If you double-click the Controller Tags, you will see that module-defined data types and tags have been automatically created (Figure 9). Note that all tag names are defined and Datalinks include the assigned drive parameter name. After you save and download the configuration, these tags allow you to access the Input and Output data of the drive via the controller’s ladder logic.

Figure 9 - Controller Tags

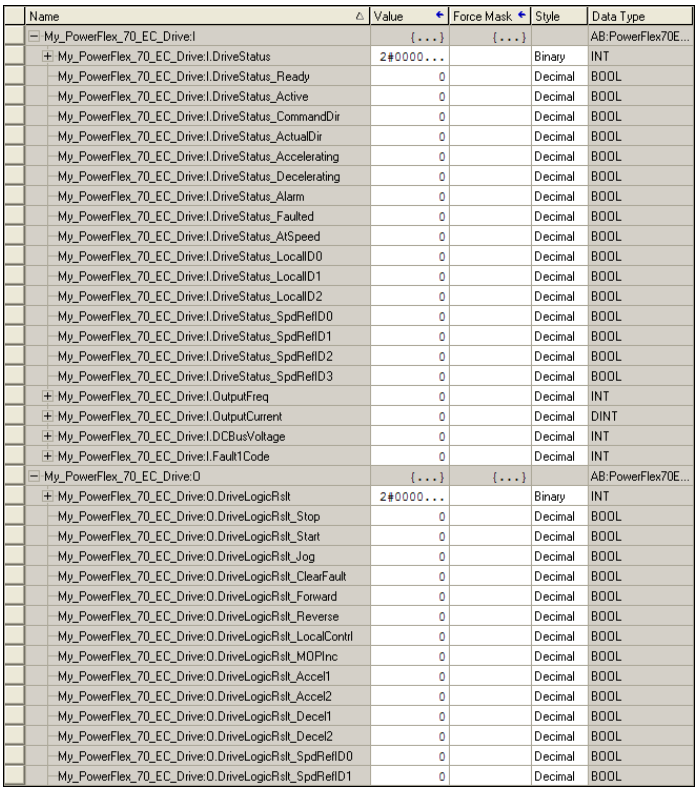

Name	Value	Force Mask	Style	Data Type
My_PowerFlex_70_EC_Drive:I	{...}	{...}		AB:PowerFlex70E...
My_PowerFlex_70_EC_Drive:I.DriveStatus	2#0000...		Binary	INT
My_PowerFlex_70_EC_Drive:I.DriveStatus_Ready	0		Decimal	BOOL
My_PowerFlex_70_EC_Drive:I.DriveStatus_Active	0		Decimal	BOOL
My_PowerFlex_70_EC_Drive:I.DriveStatus_CommandDir	0		Decimal	BOOL
My_PowerFlex_70_EC_Drive:I.DriveStatus_ActualDir	0		Decimal	BOOL
My_PowerFlex_70_EC_Drive:I.DriveStatus_Accelerating	0		Decimal	BOOL
My_PowerFlex_70_EC_Drive:I.DriveStatus_Decelerating	0		Decimal	BOOL
My_PowerFlex_70_EC_Drive:I.DriveStatus_Alarm	0		Decimal	BOOL
My_PowerFlex_70_EC_Drive:I.DriveStatus_Faulted	0		Decimal	BOOL
My_PowerFlex_70_EC_Drive:I.DriveStatus_AtSpeed	0		Decimal	BOOL
My_PowerFlex_70_EC_Drive:I.DriveStatus_LocalID0	0		Decimal	BOOL
My_PowerFlex_70_EC_Drive:I.DriveStatus_LocalID1	0		Decimal	BOOL
My_PowerFlex_70_EC_Drive:I.DriveStatus_LocalID2	0		Decimal	BOOL
My_PowerFlex_70_EC_Drive:I.DriveStatus_SpdRefID0	0		Decimal	BOOL
My_PowerFlex_70_EC_Drive:I.DriveStatus_SpdRefID1	0		Decimal	BOOL
My_PowerFlex_70_EC_Drive:I.DriveStatus_SpdRefID2	0		Decimal	BOOL
My_PowerFlex_70_EC_Drive:I.DriveStatus_SpdRefID3	0		Decimal	BOOL
My_PowerFlex_70_EC_Drive:I.OutputFreq	0		Decimal	INT
My_PowerFlex_70_EC_Drive:I.OutputCurrent	0		Decimal	DINT
My_PowerFlex_70_EC_Drive:I.DCBusVoltage	0		Decimal	INT
My_PowerFlex_70_EC_Drive:I.Fault1Code	0		Decimal	INT
My_PowerFlex_70_EC_Drive:O	{...}	{...}		AB:PowerFlex70E...
My_PowerFlex_70_EC_Drive:O.DriveLogicRslt	2#0000...		Binary	INT
My_PowerFlex_70_EC_Drive:O.DriveLogicRslt_Stop	0		Decimal	BOOL
My_PowerFlex_70_EC_Drive:O.DriveLogicRslt_Start	0		Decimal	BOOL
My_PowerFlex_70_EC_Drive:O.DriveLogicRslt_Jog	0		Decimal	BOOL
My_PowerFlex_70_EC_Drive:O.DriveLogicRslt_ClearFault	0		Decimal	BOOL
My_PowerFlex_70_EC_Drive:O.DriveLogicRslt_Forward	0		Decimal	BOOL
My_PowerFlex_70_EC_Drive:O.DriveLogicRslt_Reverse	0		Decimal	BOOL
My_PowerFlex_70_EC_Drive:O.DriveLogicRslt_LocalContrl	0		Decimal	BOOL
My_PowerFlex_70_EC_Drive:O.DriveLogicRslt_MOPInc	0		Decimal	BOOL
My_PowerFlex_70_EC_Drive:O.DriveLogicRslt_Accel1	0		Decimal	BOOL
My_PowerFlex_70_EC_Drive:O.DriveLogicRslt_Accel2	0		Decimal	BOOL
My_PowerFlex_70_EC_Drive:O.DriveLogicRslt_Decel1	0		Decimal	BOOL
My_PowerFlex_70_EC_Drive:O.DriveLogicRslt_Decel2	0		Decimal	BOOL
My_PowerFlex_70_EC_Drive:O.DriveLogicRslt_SpdRefID0	0		Decimal	BOOL
My_PowerFlex_70_EC_Drive:O.DriveLogicRslt_SpdRefID1	0		Decimal	BOOL

Save the I/O Configuration to the Controller

After adding the bridge and drive/adapter to the I/O configuration, you must download the configuration to the controller. You should also save the configuration to a file on your computer.

1. In the RSLogix 5000 window, select **Communications > Download**.

The Download dialog box appears.

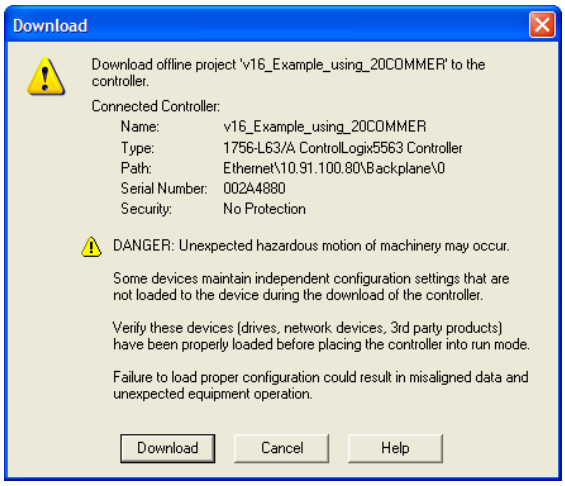

TIP If a message box reports that RSLogix 5000 software is unable to go online, select **Communications > Who Active** to find your controller in the Who Active screen. After finding and selecting the controller, click **Set Project Path** to establish the path. If your controller does not appear, you need to add or configure the EtherNet/IP driver with RSLinx software. See Using RSLinx Classic Software on page 47 and RSLinx online help for details.

2. Click **Download** to download the configuration to the controller.

   When the download is successfully completed, RSLogix 5000 software goes into the Online mode and the I/O Not Responding box in the upper-left of the window should be flashing green. Also, a yellow warning symbol ⚠ should be displayed on the I/O Configuration folder in the treeview and on the drive profile.

   If the controller was in Run Mode before clicking **Download**, RSLogix 5000 software prompts you to change the controller mode back to Remote Run. In this case, choose the appropriate mode for your application. If the controller was in Program Mode before clicking **Download**, this prompt will not appear.

3. Select **File > Save**.

   If this is the first time you saved the project, the Save As dialog box appears.

   a. Navigate to a folder.

   b. Type a file name.

   c. Click **Save** to save the configuration to a file on your computer.

   To be sure that the present project configuration values are saved, RSLogix 5000 software prompts you to upload them. Click **Yes** to upload and save the values.

Correlate the Drive with the Controller

You must now correlate the drive settings to the RSLogix 5000 project I/O settings so that they match. This requires loading the project I/O settings into the drive.

1. In the treeview under I/O Configuration, right-click on the drive profile (for this example, My_PowerFlex_70_EC_Drive) and choose **Properties**.

2. Click the Drive tab.

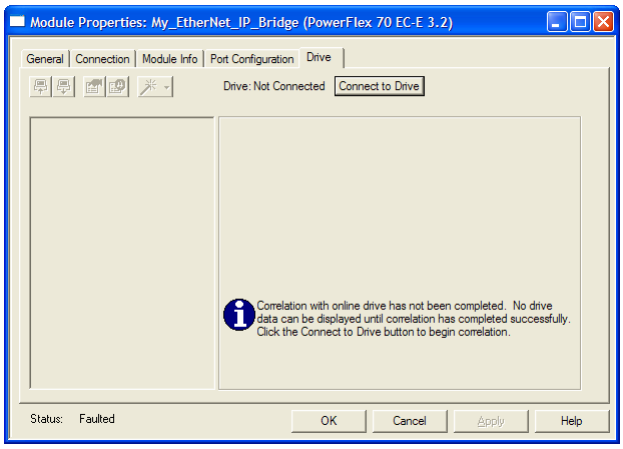

3. Click **Connect to Drive** to begin the correlation process.

   After the drive configuration data has been verified, a pop-up dialog box appears, which synchronizes ports from the online drive to the project to be sure that correct Datalinks are assigned.

4. Click OK.

   If the Differences Found screen appears—which is typical, click **Download**. This will download the project settings from the controller to the drive and its connected adapter. If **Upload** is clicked, the drive and adapter settings are uploaded to the controller.

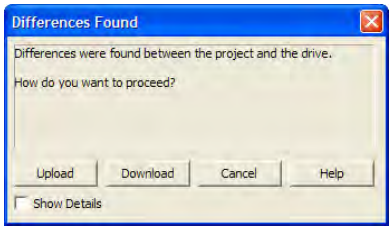

TIP On subsequent connections to the drive (after initial download), click **Upload**.

5. When the Reset Comm Module screen appears, click **Yes** to reset the communication adapter so that the new I/O settings take effect.

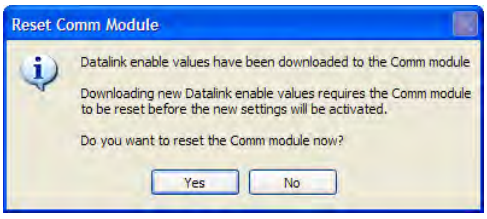

   After resetting the communication module, which may take up to a minute to complete, the I/O OK box in the upper-left of the RSLogix 5000 window should now be steady green and the yellow warning symbols ⚠ in

the treeview under the I/O Configuration folder and drive profile should be gone.

TIP If the yellow warning symbol ⚠ for your drive remains displayed, first try power cycling the drive. Otherwise, double-click the drive under the I/O tree and click the Connection tab to find the cause of the problem.

6. The Module Properties Drive Tab screen re-appears.

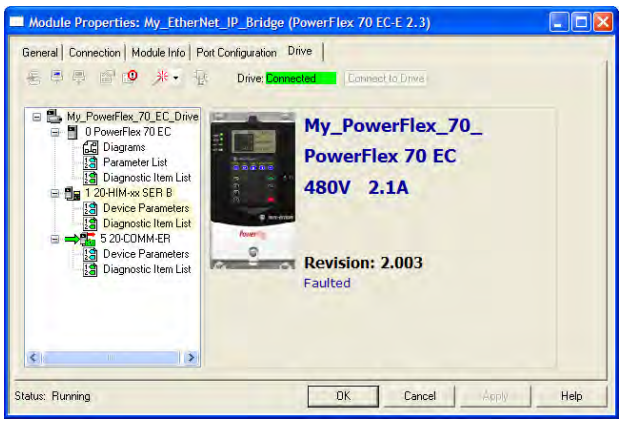

You can view the drive's Parameter List, Diagnostic Items List, and lists for any connected peripheral, including the 20-COMM-ER. While connected to the drive, you can dynamically change values of parameters. Diagnostic items and diagram views can be used for troubleshooting. Table 24 on page 147 provides diagnostic items for troubleshooting the adapter.

7. Click **OK** when finished to close the Module Properties screen for the drive.

Using the RSLogix 5000 Classic Profile, Versions 13.00…15.00

When compared to using the RSLogix 5000 Generic Profile (all versions), the RSLogix 5000 Classic Profile provides these advantages:

- Profiles for specific drives (Figure 10) that provide descriptive controller tags for basic control I/O words (Logic Command/Status and Reference/Feedback). The controller tags for Datalinks, however, have non-descriptive UserDefinedData[n] names.

- Improved I/O configuration—no I/O assembly configuration required. Basic control I/O is defined, but Datalinks still need to be configured/mapped.

- The Setup tab includes a DriveExecutive icon link to conveniently launch DriveExecutive software (when installed on computer) to match the adapter I/O configuration with the controller, and to assign the Datalink parameters in the drive. This reduces I/O mismatches.

TIP Since the RSLogix 5000 Classic Profile has been significantly improved upon by RSLogix 5000 Device Add-on Profiles, version 16.00 or later, we recommend using RSLogix 5000 Device Add-on Profiles to take advantage of its benefits (more intuitive, time saving, and less likely to make I/O configuration errors).

Figure 10 - Classic Profile Screens for Drives

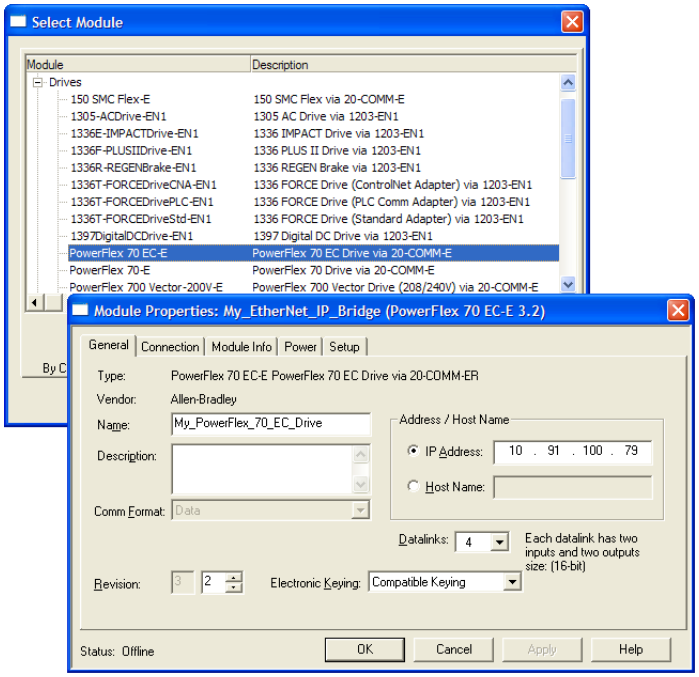

When Datalinks are used, you must enable the desired Datalinks and assign names to their non-descriptive controller tags. When a Datalink is enabled, you must set the following adapter I/O parameters:

- **Parameter 25 - [DPI I/O Cfg]** turns on the enabled Datalink bit so the 20-COMM-ER adapter will communicate that Datalink's information with the drive.

- **Parameter 37 - [M-S Input]** turns on the enabled Datalink bit so the 20-COMM-ER adapter will input that Datalink's information from the controller.

- **Parameter 38 - [M-S Output]** turns on the enabled Datalink bit so the 20-COMM-ER adapter will output that Datalink's information to the controller.

When using Datalinks, up to 8 [Data In xx] parameters and/or up to 8 [Data Out xx] parameters must be assigned to point to the appropriate drive parameters for your application.

Using the RSLogix 5000 Generic Profile, All Versions

We recommend that you use the basic RSLogix 5000 Generic Profile for only the following reasons:

- A specific drive profile in other versions of RSLogix 5000 software is unavailable.
- Users are already familiar with a drive Generic Profile and do not want to convert an existing project to a Classic Profile, versions 13.00...15.00, or to a device Add-on Profile (RSLogix 5000 software, version 16.00 or later).
- A project must maintain specific revision level control.
- The controller cannot be taken offline. RSlogix 5000 software, version 16.00 or later, enables the drive Generic Profile to be added while the controller is online and in the Run mode.

Add the Drive/Adapter to the I/O Configuration

To transmit data between the bridge and the drive, you must add the drive as a child device to the parent bridge.

1. In the treeview, right-click the bridge and select **New Module...** to display the Select Module screen.

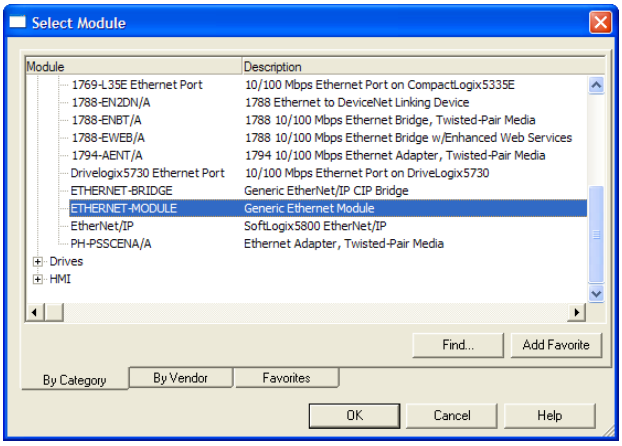

In our example, we right-click on the 1756-ENBT/A bridge.

2. Expand the Communications group to display all of the available communication modules.

3. Select "ETHERNET-MODULE" from the list to configure the drive and its connected 20-COMM-ER adapter.
4. Click **OK**.

The drive's New Module screen appears.

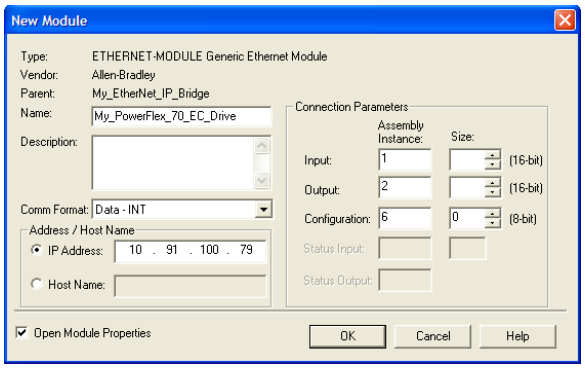

5. Edit the following information about the drive and adapter.

Box	Setting
Name	A name to identify the drive and adapter.
Description	Optional – description of the drive/adapter.
Comm Format	**Data - INT** (This setting formats the data in 16-bit words.)
IP Address	The IP address of the adapter.
Open Module Properties	When this box is checked, clicking **OK** opens additional module properties screens to further configure the drive/adapter. When unchecked, clicking **OK** closes the drive's New Module screen. For this example, check this box.

6. Under Connection Parameters, edit the following information.

Box	Assembly Instance	Size
Input	**1** (This value is required.)	The value will vary based on your application (setting of **Parameters 25 - [DPI I/O Cfg]** and **38 - [M-S Output]**) and the size (16-bit or 32-bit) of the Reference/Feedback and Datalinks in the drive. See Table 2, Table 3, or Table 4 on page 64.
Output	**2** (This value is required.)	The value will vary based on your application (setting of **Parameters 25 - [DPI I/O Cfg]** and **37 - [M-S Input]**) and the size (16-bit or 32-bit) of the Reference/Feedback and Datalinks in the drive. See Table 2, Table 3, or Table 4 on page 64.
Configuration	**6** (This value is required.)	**0** (This value is required.)

The following tables define the number of 16-bit words that you need to enter for the Input Size and Output Size boxes depending on your configuration.

Table 2 - Devices with 16-bit Reference/Feedback and 16-bit Datalinks

These products include the following:

- PowerFlex 70 drives with standard or enhanced control
- PowerFlex 700 drives with standard control
- PowerFlex 700H drives
- SMC Flex smart motor controllers
- SMC-50 smart motor controllers

Logic Command/ Status	Ref/Fdbk (16-bit)	Datalinks (16-bit)				User Configured Settings				
		A	B	C	D	Size in Words		Par. 23 - [DPI I/O Cfg]	Par. 35 - [M-S Input]	Par. 36 - [M-S Output]
						Input	Output			
✔	✔					4	2	...0 0001	...0 0001	...0 0001
✔	✔	✔				6	4	...0 0011	...0 0011	...0 0011
✔	✔	✔	✔			8	6	...0 0111	...0 0111	...0 0111
✔	✔	✔	✔	✔		10	8	...0 1111	...0 1111	...0 1111
✔	✔	✔	✔	✔	✔	12	10	...1 1111	...1 1111	...1 1111

Table 3 - Devices with 16-bit Reference/Feedback and 32-bit Datalinks

These products include the following:

- PowerFlex 700 drives with vector control
- PowerFlex 700L drives with 700 control
- PowerFlex Digital DC drives
- SMC Controllers

Logic Command/ Status	Ref/Fdbk (16-bit)	Datalinks (32-bit)				User Configured Settings				
		A	B	C	D	Size in Words		Par. 23 - [DPI I/O Cfg]	Par. 35 - [M-S Input]	Par. 36 - [M-S Output]
						Input	Output			
✔	✔					4	2	...0 0001	...0 0001	...0 0001
✔	✔	✔				8	6	...0 0011	...0 0011	...0 0011
✔	✔	✔	✔			12	10	...0 0111	...0 0111	...0 0111
✔	✔	✔	✔	✔		16	14	...0 1111	...0 1111	...0 1111
✔	✔	✔	✔	✔	✔	20	18	...1 1111	...1 1111	...1 1111

Table 4 - Drives with 32-bit Reference/Feedback and 32-bit Datalinks

These products include the following:

- PowerFlex 700S drives with Phase I or Phase II control
- PowerFlex 700L drives with 700S control
- PowerFlex 753 drives
- PowerFlex 755 drives

Logic Command/ Status	Ref/Fdbk (32-bit)	Datalinks (32-bit)				User Configured Settings				
		A	B	C	D	Size in Words		Par. 23 - [DPI I/O Cfg]	Par. 35 - [M-S Input]	Par. 36 - [M-S Output]
						Input	Output			
✔	✔					6	4	...0 0001	...0 0001	...0 0001
✔	✔	✔				10	8	...0 0011	...0 0011	...0 0011
✔	✔	✔	✔			14	12	...0 0111	...0 0111	...0 0111
✔	✔	✔	✔	✔		18	16	...0 1111	...0 1111	...0 1111
✔	✔	✔	✔	✔	✔	22	20	...1 1111	...1 1111	...1 1111

TIP For instructions on configuring the I/O for the adapter using **Parameter 25 - [DPI I/O Cfg]** and its Master-Slave Hierarchy using **Parameters 37 - [M-S Input]** and **38 - [M-S Output]**, see Setting the I/O Configuration on page 35.

When using Datalinks, up to 8 [Data In xx] parameters and/or up to 8 [Data Out xx] parameters must be assigned to point to the appropriate device parameters for your application.

7. After setting the information in the device's New Module screen, click **OK**.

The Module Properties screen appears.

8. Click the Connection tab.

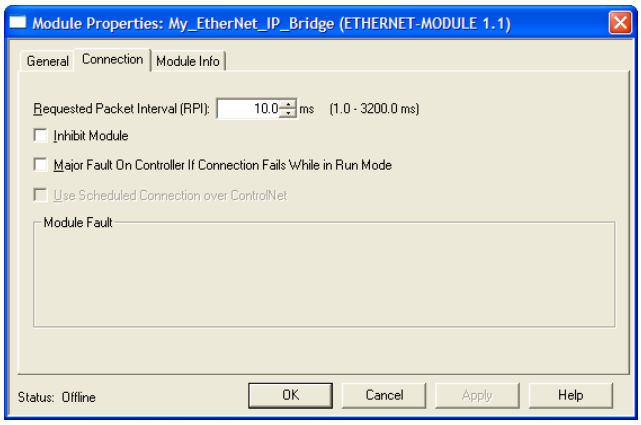

9. In the 'Requested Packet Interval (RPI)' box, set the value to 5.0 ms or greater.

This value determines the maximum interval that a controller should use to move data to and from the adapter. To conserve bandwidth, use higher values for communicating with low priority devices. For this example, leave the 'Inhibit Module' and 'Major Fault …' boxes unchecked.

10. Click **OK**.

The new node ('My_PowerFlex_70_EC_Drive' in this example) now appears under the bridge ('My_EtherNet_IP_Bridge' in this example) in the I/O Configuration folder. If you double-click the Controller Tags, you will see that module-defined data types and tags have been automatically created (Figure 11). After you save and download the configuration, these tags allow you to access the Input and Output data of the drive via the controller's ladder logic.

For this example, all Datalinks (A, B, C, and D) are enabled. The Input Size is set to 12 words and the Output Size is set to 10 words. Also, the following adapter I/O parameters are set to the following values.

Adapter Parameter No.	Setting
25 - [DPI I/O Cfg]	xxxx xxxx xxx1 1111
37 - [M-S Input]	xxxx xxxx xxx1 1111
38 - [M-S Output]	xxxx xxxx xxx1 1111

11. Reset the adapter (see Resetting the Adapter on page 43) or power cycle the device.

For the device speed reference and Datalink parameter values and the adapter setup parameter values, see Drive and Adapter Parameter Settings on page 90.

Figure 11 - Controller Tags

Name	Value	Force Mask	Style	Data Type
+ My_PowerFlex_70_EC_Drive:C	{...}	{...}		AB:ETHERNET_...
− My_PowerFlex_70_EC_Drive:I	{...}	{...}		AB:ETHERNET_...
− My_PowerFlex_70_EC_Drive:I.Data	{...}	{...}	Decimal	INT[12]
+ My_PowerFlex_70_EC_Drive:I.Data[0]	0		Decimal	INT
+ My_PowerFlex_70_EC_Drive:I.Data[1]	0		Decimal	INT
+ My_PowerFlex_70_EC_Drive:I.Data[2]	0		Decimal	INT
+ My_PowerFlex_70_EC_Drive:I.Data[3]	0		Decimal	INT
+ My_PowerFlex_70_EC_Drive:I.Data[4]	0		Decimal	INT
+ My_PowerFlex_70_EC_Drive:I.Data[5]	0		Decimal	INT
+ My_PowerFlex_70_EC_Drive:I.Data[6]	0		Decimal	INT
+ My_PowerFlex_70_EC_Drive:I.Data[7]	0		Decimal	INT
+ My_PowerFlex_70_EC_Drive:I.Data[8]	0		Decimal	INT
+ My_PowerFlex_70_EC_Drive:I.Data[9]	0		Decimal	INT
+ My_PowerFlex_70_EC_Drive:I.Data[10]	0		Decimal	INT
+ My_PowerFlex_70_EC_Drive:I.Data[11]	0		Decimal	INT
− My_PowerFlex_70_EC_Drive:O	{...}	{...}		AB:ETHERNET_...
− My_PowerFlex_70_EC_Drive:O.Data	{...}	{...}	Decimal	INT[10]
+ My_PowerFlex_70_EC_Drive:O.Data[0]	0		Decimal	INT
+ My_PowerFlex_70_EC_Drive:O.Data[1]	0		Decimal	INT
+ My_PowerFlex_70_EC_Drive:O.Data[2]	0		Decimal	INT
+ My_PowerFlex_70_EC_Drive:O.Data[3]	0		Decimal	INT
+ My_PowerFlex_70_EC_Drive:O.Data[4]	0		Decimal	INT
+ My_PowerFlex_70_EC_Drive:O.Data[5]	0		Decimal	INT
+ My_PowerFlex_70_EC_Drive:O.Data[6]	0		Decimal	INT
+ My_PowerFlex_70_EC_Drive:O.Data[7]	0		Decimal	INT
+ My_PowerFlex_70_EC_Drive:O.Data[8]	0		Decimal	INT
+ My_PowerFlex_70_EC_Drive:O.Data[9]	0		Decimal	INT

Save the I/O Configuration to the Controller

After adding the bridge and drive/adapter to the I/O configuration, you must download the configuration to the controller. You should also save the configuration to a file on your computer.

TIP When using RSLogix 5000 software, version 16.00 or later, you can add the I/O configuration of a Generic Profile while the controller is online and in the Run mode.

1. In the RSLogix 5000 window, select **Communications > Download**.

The Download dialog box appears.

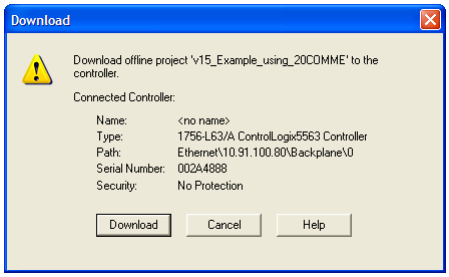

TIP If a message box reports that RSLogix 5000 software is unable to go online, select **Communications > Who Active** to find your controller in the Who Active screen. After finding and selecting the controller, click **Set Project Path** to establish the path. If your controller does not appear, you need to add or configure the EtherNet/IP driver with RSLinx software. See Using RSLinx Classic Software on page 47 and RSLinx online help for details.

2. Click **Download** to download the configuration to the controller.

   When the download is successfully completed, RSLogix 5000 software goes into the Online mode and the I/O OK box in the upper-left of the screen should be steady green.

3. Select **File > Save**.

   If this is the first time you saved the project, the Save As dialog box appears. Navigate to a folder, type a file name, and click **Save** to save the configuration to a file on your computer.

   To be sure that the present project configuration values are saved, RSLogix 5000 software prompts you to upload them. Click **Yes** to upload and save the values.

4. Configure any Datalinks in the drive (for example, Datalink parameters 300...317 in PowerFlex 70 drives) that were enabled in the controller and adapter during I/O configuration (Table 2, Table 3, or Table 4).

   Each Datalink being used must be assigned to a specific parameter in the drive or connected peripheral. If this is not done, the controller will receive or send placeholder data instead of actual drive or peripheral parameter values.

5. Place the controller in Remote Run or Run Mode.

Limitations Using a MicroLogix 1100/1400 Controller

Controlling I/O with explicit messages is relatively complex compared to normal implicit I/O control.

ControlLogix and CompactLogix controllers with EtherNet/IP provide the easiest and most integrated form of implicit I/O control for a device. RSLogix 5000 software, version 16.00 or later, for ControlLogix and CompactLogix controllers contains integrated profiles for PowerFlex drives that, with a few clicks of the mouse, automatically create all controller tags and an implicit connection at the specified Requested Packet Interval to control the drive. This connection is monitored at both ends to verify that the controller and drive are communicating. A watchdog will cause a drive fault if the drive does not respond within approximately 100 milliseconds. Therefore, using a ControlLogix or CompactLogix controller is by far the much preferred method of controlling drives on EtherNet/IP.

If you are not using either of these type of controllers, then devices on EtherNet/IP can be controlled with explicit messages using MicroLogix 1100/1400 controllers with the following limitations:

- An explicit message is a much slower form of control and is non-deterministic. This means that you cannot guarantee how long the device will take to start up or stop when the command is given. Therefore, all equipment used in this manner should be subject to a risk assessment, taking into account the mechanical and electrical implementation.
- A timeout value (in seconds) in the EtherNet/IP adapter will issue a device fault if a message is not received from the controller within the specified time. However, the controller has no way of detecting a loss of communication to the device until the next cycle of explicit messages. This is another factor in the risk assessment.
- Any additional devices to be controlled will require additional explicit messages for their control, and they need to be carefully sequenced. Most controllers have small communication queues (see the User Manual), which need to be carefully managed if messages are not to be lost.
- Each controller has a limited number of communication connections (see its User Manual for maximum connections), which will limit the number of drives that can be connected.

In summary, unlike a ControlLogix or CompactLogix controller, programming a MicroLogix 1100/1400 controller by using RSLogix 500 software with explicit messages is more difficult, and produces a more complex program.

MicroLogix 1100/1400 Controller Example

After the adapter is configured, the connected drive and adapter will be a single node on the network. This section provides the steps needed to configure a simple EtherNet/IP network (see Figure 12). In our example, we will configure a MicroLogix 1100 controller to communicate with a drive using Logic Command/Status, Reference/Feedback, and Datalinks over the network.

Figure 12 - Example MicroLogix 1100/1400 Controller EtherNet/IP Network

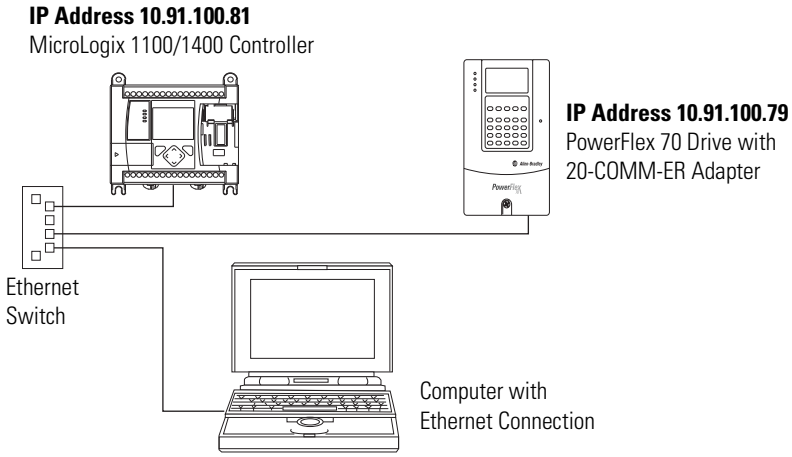

TIP Information for PowerFlex 750-Series drives has been added where applicable.

Configuring Parameters for Network I/O

Because the I/O for the drive is message-based, there is no need to configure any I/O inside the RSLogix 500 project, version 7.00 or later, until using the I/O as described in Chapter 5.

However, to get the adapter to operate with the I/O created in Chapter 5, we need to configure the adapter to accept the I/O and drive to point to the appropriate Datalinks.

1. For this example, the following adapter I/O parameters are set to the following values.

Adapter Parameter No.	Setting
25 - [DPI I/O Cfg]	xxxx xxxx xxx1 1111
37 - [M-S Input]	xxxx xxxx xxx1 1111
38 - [M-S Output]	xxxx xxxx xxx1 1111

2. Reset the adapter (see Resetting the Adapter on page 43) or power cycle the drive.

For the drive speed reference and Datalink parameter values and the adapter setup parameter values, refer to Drive and Adapter Parameter Settings on page 96.

Creating RSLogix 500 Project, Version 7.00 or Later

To transmit (read and write) data between the controller and drive, you must create message instructions that allocate data table addresses in the controller for Logic Command/Status, Reference/Feedback, and Datalinks.

Select the Controller

1. Start RSLogix 500 software.

   The RSLogix 500 window appears.

2. Select **File > New** to display the Select Processor Type screen.

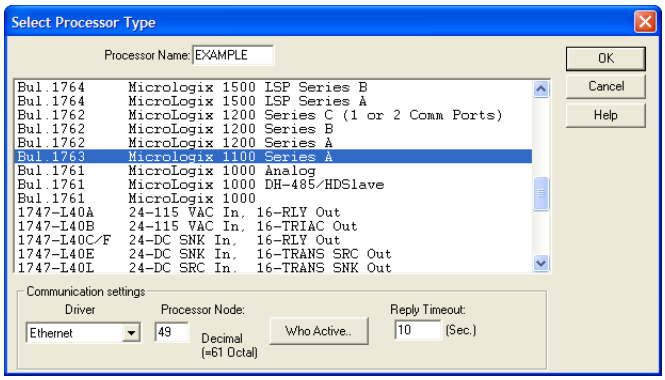

3. Assign a name for the processor.
4. In the list, select the MicroLogix 1100.
5. Choose the appropriate choices for the fields in the screen to match your application.
6. Click **OK**.

   The RSLogix 500 project window appears.

Create MicroLogix 1100/1400 Ladder Logic for the Control Timeout

1. In the RSLogix 500 project window treeview under Program Files double-click on LAD 2.
2. Insert a ladder rung.
3. Double-click on the rung to display the rung editor.
4. Enter **MSG MGxx:n**, where:

   xx is an unused data file number (for example, MG10:n), and
   n is an unused element of the data file chosen for xx (for example, MG10:0)
5. Press **Enter**.
6. Insert another separate rung.
7. Double-click on the rung to display the rung editor.
8. Enter **BST XIC MGxx:n/DN NXB XIC MGxx:n/ER BND OTU MGxx:n/EN**, where:

   xx and n must correspond to the assigned data file number and element (for example, MG10:0) for the message created in steps 2…5.

Important: The information must be entered with appropriate numbers for ‘xx’ and ‘n’ for your application, and with spaces and forward slashes exactly as shown.

9. Press **Enter**.
10. In the MSG instruction (Figure 13), double-click Setup Screen to launch the message configuration screen (Figure 14).

Figure 13 - MicroLogix 1100/1400 Ladder Logic for the Control Timeout

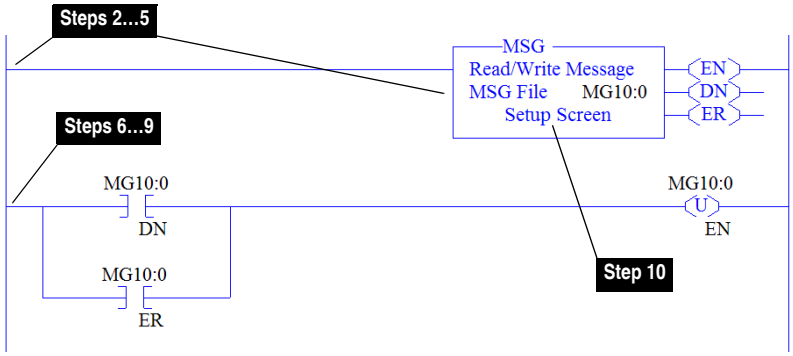

11. Configure the General tab fields by entering or verifying the information shown in the message configuration screen.

Figure 14 - MicroLogix 1100/1400 Message Configuration Screens for the Control Timeout

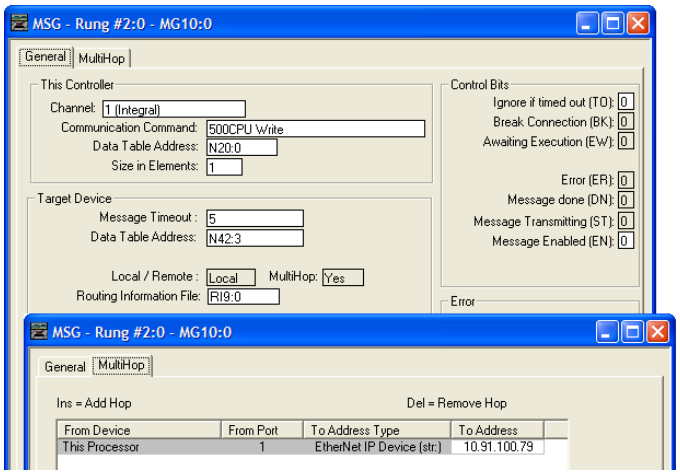

General Tab Box	Setting
This Controller (data for MicroLogix 1100)	
Channel	**1 (integral)**. Controller port to which the network is connected.
Communication Command	**500CPU Write**. The controller type and command type for the controller to read or write data. Because the MicroLogix 1100 is part of the SLC-500 controller family, the '500CPU' controller type was selected. The 'Write' command type was selected to write the control timeout value to the drive.
Data Table Address (1)	**N20:0**. An unused controller data table address containing the control timeout value to be written.
Size in Elements (2)	**1**. Number of elements (words) to be transferred. Each element size is a 16-bit integer.
Target Device (data for adapter/drive)	
Message Timeout	**5**. Message timeout duration in seconds.
Data Table Address (3)	**N42:3**. Specific starting address of the destination file in the drive.
Routing Information File	**RI9:0**. An unused routing information file for the controller.
MultiHop Tab Box	**Setting**
To Address	**10.91.100.79.** The IP address of the adapter connected to the drive.

(1) For details on data table addresses for this example project, see Table 11…Table 14 starting on page 98.

(2) For details to determine element size for a specific drive, see Understanding Controller Data Table Addresses on page 97.

(3) For details on setting the control timeout value and its function, see N-Files on page 192. The Control Timeout (N42:3) is stored in RAM. If the 20-COMM-ER adapter is power cycled, the Control Timeout Message must be re-sent. If the Control Timeout is not changed from a non-zero value, the control message (page 75) will error out.

TIP The Control Timeout (N42:3) must be changed to a non-zero value (5…20 seconds recommended). If the Control Timeout is not changed from a non-zero value, the control message (page 75) will error out. The Control Timeout is stored in RAM. If the adapter is power cycled, the Control Timeout Message must be re-sent.

Create MicroLogix 1100/1400 Ladder Logic for the Logic Status, Feedback, and Datalink Out

1. Insert another separate rung.
2. Double-click on the rung to display the rung editor.
3. Enter **MSG MGxx:n**, where:

   xx is an unused data file number (for example, MG11:n), and
   n is an unused element of the data file chosen for xx (for example, MG11:0)
4. Press **Enter**.
5. Insert another separate rung.
6. Double-click on the rung to display the rung editor.
7. Enter **BST XIC MGxx:n/DN NXB XIC MGxx:n/ER BND OTU MGxx:n/EN**, where:

   xx and n must correspond to the assigned data file number and element (for example, MG11:0) for the message created in steps 1…4.

Important: The information must be entered with appropriate numbers for ‘xx’ and ‘n’ for your application, and with spaces and forward slashes exactly as shown.

8. Press **Enter**.
9. In the MSG instruction (Figure 15), double-click Setup Screen to launch the message configuration screen (Figure 16).

Figure 15 - MicroLogix 1100/1400 Ladder Logic for the Logic Status, Feedback, and Datalink Out

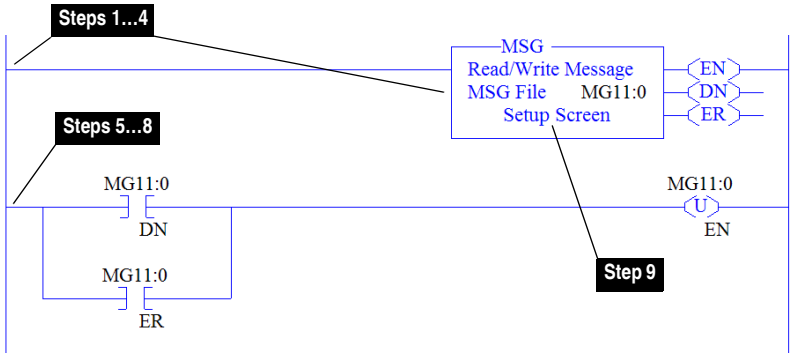

10. Configure the General tab fields by entering or verifying the information shown in the message configuration screen.

Figure 16 - MicroLogix 1100/1400 Message Configuration Screens for the Logic Status, Feedback, and Datalink Out

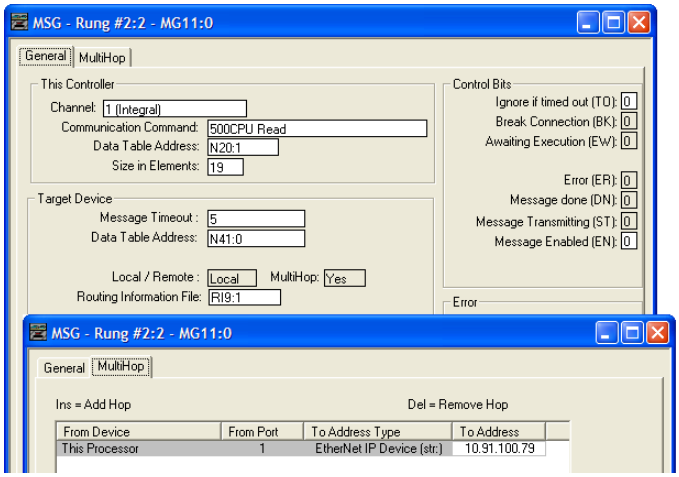

General Tab Box	Setting
This Controller (data for MicroLogix 1100)	
Channel	**1 (integral)**. Controller port to which the network is connected.
Communication Command	**500CPU Read**. The controller type and command type for the controller to read or write data. Because the MicroLogix 1100 is part of the SLC-500 controller family, the '500CPU' controller type was selected. The 'Read' command type was selected to read data from the drive.
Data Table Address (1)	**N20:1**. An unused controller data table address containing the data to be read from the drive.
Size in Elements (2)	**19**. Number of elements (words) to be transferred. Each element size is a 16-bit integer.
Target Device (data for adapter/drive)	
Message Timeout	**5**. Message timeout duration in seconds.
Data Table Address (3)	**N41:0**. Specific starting address of the source file in the drive.
Routing Information File	**RI9:1**. An unused routing information file for the controller.
MultiHop Tab Box	**Setting**
To Address	**10.91.100.79.** The IP address of the adapter connected to the drive.

(1) For details on data table addresses for this example project, see Table 11…Table 14 starting on page 98.

(2) For details to determine element size for a specific drive, see Understanding Controller Data Table Addresses on page 97.

(3) For N-File details, see N-Files on page 192.

Create MicroLogix 1100/1400 Ladder Logic for the Logic Command, Reference, and Datalink In

1. Insert another separate rung.
2. Double-click on the rung to display the rung editor.
3. Enter **MSG MGxx:n**, where:

   xx is an unused data file number (for example, MG12:n), and
   n is an unused element of the data file chosen for xx (for example, MG12:0)
4. Press **Enter**.
5. Insert another separate rung.
6. Double-click on the rung to display the rung editor.
7. Enter **BST XIC MGxx:n/DN NXB XIC MGxx:n/ER BND OTU MGxx:n/EN**, where:

   xx and n must correspond to the assigned data file number and element (for example, MG12:0) for the message created in steps 1…4.

Important: The information must be entered with appropriate numbers for ‘xx’ and ‘n’ for your application, and with spaces and forward slashes exactly as shown.

8. Press **Enter**.
9. In the MSG instruction (Figure 17), double-click Setup Screen to launch the message configuration screen (Figure 18).

Figure 17 - MicroLogix 1100/1400 Ladder Logic for the Logic Command, Reference, and Datalink In

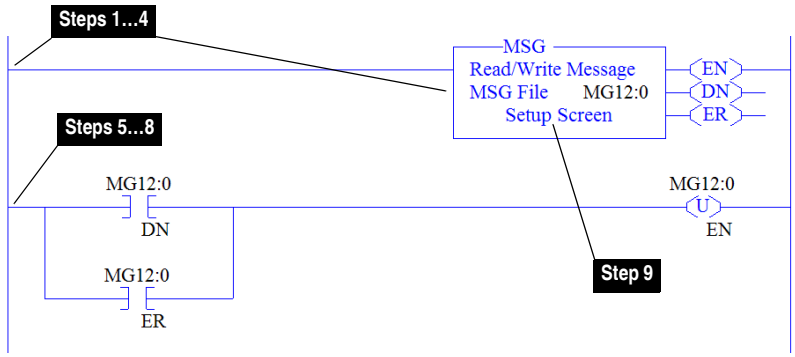

10. Configure the General tab fields by entering or verifying the information shown in the message configuration screen.

Figure 18 - MicroLogix 1100/1400 Message Configuration Screens for the Logic Command, Reference, and Datalink In

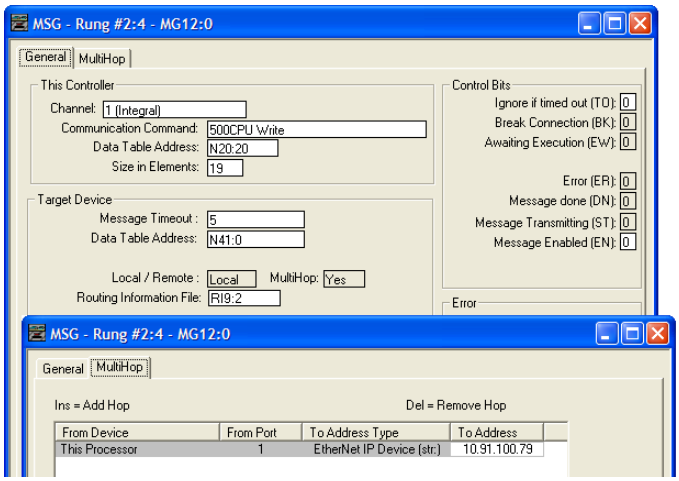

General Tab Box	Setting
This Controller (data for MicroLogix 1100)	
Channel	**1 (integral)**. Controller port to which the network is connected.
Communication Command	**500CPU Write**. The controller type and command type for the controller to read or write data. Because the MicroLogix 1100 is part of the SLC-500 controller family, the '500CPU' controller type was selected. The 'Write' command type was selected to write data to the drive.
Data Table Address (1)	**N20:20**. An unused controller data table address containing the data to be written to the drive.
Size in Elements (2)	**19**. Number of elements (words) to be transferred. Each element size is a 16-bit integer.
Target Device (data for adapter/drive)	
Message Timeout	**5**. Message timeout duration in seconds.
Data Table Address (3)	**N41:0**. Specific starting address of the destination file in the drive.
Routing Information File	**RI9:2**. An unused routing information file for the controller.
MultiHop Tab Box	**Setting**
To Address	**10.91.100.79.** The IP address of the adapter connected to the drive.

(1) For details on data table addresses for this example project, see Table 11…Table 14 starting on page 98.

(2) For details to determine element size for a specific drive, see Understanding Controller Data Table Addresses on page 97.

(3) For N-File details, see N-Files on page 192.

TIP This message will error out if the Control Timeout value is not changed from a non-zero value. Refer to page 71 for writing a value to the Control Timeout.

TIP If the controller is controlling more than one drive, it is recommended to intersperse the control I/O messaging for each drive to conserve network bandwidth and decrease response time. That is, sequence the message instructions for each drive so that its group of messages will occur at a different time than those for another drive.

Notes:

Using the I/O

This chapter provides information and examples that explain how to control, configure, and monitor a PowerFlex 7-Class drive or SMC using the configured I/O.

Topic	Page
About I/O Messaging	79
Understanding the I/O Image	80
Using Logic Command/Status	84
Using Reference/Feedback	84
Using Datalinks	86
Example Ladder Logic Program Information	87
ControlLogix Controller Example	88

ATTENTION: Risk of injury or equipment damage exists. The examples in this publication are intended solely for purposes of example. There are many variables and requirements with any application. Rockwell Automation, Inc. does not assume responsibility or liability (to include intellectual property liability) for actual use of the examples shown in this publication.

About I/O Messaging

On CIP-based networks, including EtherNet/IP, I/O connections are used to transfer the data which controls the PowerFlex drive or SMC and sets its Reference. I/O can also be used to transfer data to and from Datalinks.

The adapter provides many options for configuring and using I/O, including the following:

- Configuring the size of I/O by enabling or disabling the Logic Command/Reference and Datalinks.
- Setting a Master-Slave or Peer-to-Peer hierarchy.

Chapter 3, Configuring the Adapter, and Chapter 4, Configuring the I/O, discuss how to configure the adapter and controller on the network for these options. The defines the different options. This chapter discusses how to use I/O after you have configured the adapter and controller.

Understanding the I/O Image

The terms 'input' and 'output' are defined from the controller's point of view. Therefore, output I/O is data that is produced by the controller and consumed by the adapter. Input I/O is status data that is produced by the adapter and consumed as input by the controller. The I/O image will vary based on the following:

- Size (either 16-bit or 32-bit) of the Reference/Feedback words and Datalink words used by the device. To determine the size of the Reference/Feedback and Datalinks, view adapter **Parameters 20 - [Ref/Fdbk Size]** and **21- [Datalink Size]**. For information to access parameters, see Using the PowerFlex 7-Class HIM on page 28.

- Configuration of I/O (**Parameter 25 - [DPI I/O Cfg]**). If all I/O is not enabled, the image is truncated. The image always uses consecutive words starting at word 0.

- **ControlLogix/CompactLogix Controllers only**—The drive profile used in RSLogix 5000 software (device Add-on Profile in version 16.00 or later, Classic Profile in versions 13.00...15.00, or Generic Profile in all versions).

ControlLogix Controller Image

Since the device Add-on Profile in RSLogix 5000 software, version 16.00 or later, and the Classic Profile, versions 13.00...15.00, provide descriptive controller tags, the I/O image (tag size and location) is automatically configured based on the device being used. When using the Generic Profile (page 62) in RSLogix 5000 software, however, controller tags are not descriptive or defined.

The ControlLogix controller I/O image changes depending on the size of the device's Reference/Feedback and Datalinks. Table , Table , and Table show the I/O image when using various PowerFlex 7-Class drives, and all Datalinks enabled.

Table 5 - ControlLogix Controller I/O Image for Devices with 16-bit Reference/ Feedback and 16-bit Datalinks – Using Generic Profile

These products include the following:

- PowerFlex 70 drives with standard or enhanced control
- PowerFlex 700 drives with standard control
- PowerFlex 700H drives
- SMC Flex smart motor controllers
- SMC-50 smart motor controllers

Word	Output I/O
0	Logic Command
1	Reference
2	Datalink In A1
3	Datalink In A2
4	Datalink In B1
5	Datalink In B2
6	Datalink In C1
7	Datalink In C2
8	Datalink In D1
9	Datalink In D2

Word	Input I/O
0	Pad Word
1	Pad Word
2	Logic Status
3	Feedback
4	Datalink Out A1
5	Datalink Out A2
6	Datalink Out B1
7	Datalink Out B2
8	Datalink Out C1
9	Datalink Out C2
10	Datalink Out D1
11	Datalink Out D2

Table 6 - ControlLogix Controller I/O Image for Devices with 16-bit Reference/ Feedback and 32-bit Datalinks – Using Generic Profile

These products include the following:

- PowerFlex 700 drives with vector control
- PowerFlex 700L drives with 700 control
- PowerFlex Digital DC drives
- SMC-50 smart motor controllers

Word	Output I/O
0	Logic Command
1	Reference
2	Datalink In A1 (LSW)
3	Datalink In A1 (MSW)
4	Datalink In A2 (LSW)
5	Datalink In A2 (MSW)
6	Datalink In B1 (LSW)
7	Datalink In B1 (MSW)
8	Datalink In B2 (LSW)
9	Datalink In B2 (MSW)
10	Datalink In C1 (LSW)
11	Datalink In C1 (MSW)
12	Datalink In C2 (LSW)
13	Datalink In C2 (MSW)
14	Datalink In D1 (LSW)
15	Datalink In D1 (MSW)
16	Datalink In D2 (LSW)
17	Datalink In D2 (MSW)

Word	Input I/O
0	Pad Word
1	Pad Word
2	Logic Status
3	Feedback
4	Datalink Out A1 (LSW)
5	Datalink Out A1 (MSW)
6	Datalink Out A2 (LSW)
7	Datalink Out A2 (MSW)
8	Datalink Out B1 (LSW)
9	Datalink Out B1 (MSW)
10	Datalink Out B2 (LSW)
11	Datalink Out B2 (MSW)
12	Datalink Out C1 (LSW)
13	Datalink Out C1 (MSW)
14	Datalink Out C2 (LSW)
15	Datalink Out C2 (MSW)
16	Datalink Out D1 (LSW)
17	Datalink Out D1 (MSW)
18	Datalink Out D2 (LSW)
19	Datalink Out D2 (MSW)

Table 7 - ControlLogix Controller I/O Image for Drives with 32-bit Reference/ Feedback and 32-bit Datalinks – Using Generic Profile

These products include the following:

- PowerFlex 700S drives with Phase I or Phase II control
- PowerFlex 700L drives with 700S control
- PowerFlex 753 drives
- PowerFlex 755 drives

Word	Output I/O
0	Logic Command
1	Not Used
2	Reference (LSW)
3	Reference (MSW)
4	Datalink In A1 (LSW)
5	Datalink In A1 (MSW)
6	Datalink In A2 (LSW)
7	Datalink In A2 (MSW)
8	Datalink In B1 (LSW)
9	Datalink In B1 (MSW)
10	Datalink In B2 (LSW)
11	Datalink In B2 (MSW)
12	Datalink In C1 (LSW)
13	Datalink In C1 (MSW)
14	Datalink In C2 (LSW)
15	Datalink In C2 (MSW)
16	Datalink In D1 (LSW)
17	Datalink In D1 (MSW)
18	Datalink In D2 (LSW)
19	Datalink In D2 (MSW)

Word	Input I/O
0	Pad Word
1	Pad Word
2	Logic Status
3	Not Used
4	Feedback (LSW)
5	Feedback (MSW)
6	Datalink Out A1 (LSW)
7	Datalink Out A1 (MSW)
8	Datalink Out A2 (LSW)
9	Datalink Out A2 (MSW)
10	Datalink Out B1 (LSW)
11	Datalink Out B1 (MSW)
12	Datalink Out B2 (LSW)
13	Datalink Out B2 (MSW)
14	Datalink Out C1 (LSW)
15	Datalink Out C1 (MSW)
16	Datalink Out C2 (LSW)
17	Datalink Out C2 (MSW)
18	Datalink Out D1 (LSW)
19	Datalink Out D1 (MSW)
20	Datalink Out D2 (LSW)
21	Datalink Out D2 (MSW)

MicroLogix 1100/1400 Controller Image

The I/O image for these controllers always has 19 words of output and 19 words of input. However, depending on the size of the device's Reference/Feedback and Datalinks, specific words in the I/O image may not be used. Table 8, Table 9, and Table 10 show the I/O image when using various PowerFlex 7-Class drives, and all Datalinks enabled.

Table 8 - MicroLogix 1100/1400 I/O Image for PowerFlex 70/ 700/700H Drives and SMC Flex (16-bit Reference/Feedback and 16-bit Datalinks)

Word	Output I/O
0	Logic Command
1	Not used
2	Reference (MSW)
3	Not used
4	Datalink In A1 (MSW)
5	Not used
6	Datalink In A2 (MSW)
7	Not used
8	Datalink In B1 (MSW)
9	Not used
10	Datalink In B2 (MSW)
11	Not used
12	Datalink In C1 (MSW)
13	Not used
14	Datalink In C2 (MSW)
15	Not used
16	Datalink In D1 (MSW)
17	Not used
18	Datalink In D2 (MSW)

Word	Input I/O
0	Logic Status
1	Not used
2	Feedback (MSW)
3	Not used
4	Datalink Out A1 (MSW)
5	Not used
6	Datalink Out A2 (MSW)
7	Not used
8	Datalink Out B1 (MSW)
9	Not used
10	Datalink Out B2 (MSW)
11	Not used
12	Datalink Out C1 (MSW)
13	Not used
14	Datalink Out C2 (MSW)
15	Not used
16	Datalink Out D1 (MSW)
17	Not used
18	Datalink Out D2 (MSW)

Table 9 - MicroLogix 1100/1400 I/O Image for PowerFlex 700 VC Drives and SMC-50 Controllers (16-bit Reference/Feedback and 32-bit Datalinks)

Word	Output I/O
0	Logic Command
1	Not used
2	Reference (MSW)
3	Datalink In A1 (LSW)
4	Datalink In A1 (MSW)
5	Datalink In A2 (LSW)
6	Datalink In A2 (MSW)
7	Datalink In B1 (LSW)
8	Datalink In B1 (MSW)
9	Datalink In B2 (LSW)
10	Datalink In B2 (MSW)
11	Datalink In C1 (LSW)
12	Datalink In C1 (MSW)
13	Datalink In C2 (LSW)
14	Datalink In C2 (MSW)
15	Datalink In D1 (LSW)
16	Datalink In D1 (MSW)
17	Datalink In D2 (LSW)
18	Datalink In D2 (MSW)

Word	Input I/O
0	Logic Status
1	Not used
2	Feedback (MSW)
3	Datalink Out A1 (LSW)
4	Datalink Out A1 (MSW)
5	Datalink Out A2 (LSW)
6	Datalink Out A2 (MSW)
7	Datalink Out B1 (LSW)
8	Datalink Out B1 (MSW)
9	Datalink Out B2 (LSW)
10	Datalink Out B2 (MSW)
11	Datalink Out C1 (LSW)
12	Datalink Out C1 (MSW)
13	Datalink Out C2 (LSW)
14	Datalink Out C2 (MSW)
15	Datalink Out D1 (LSW)
16	Datalink Out D1 (MSW)
17	Datalink Out D2 (LSW)
18	Datalink Out D2 (MSW)

Table 10 - MicroLogix 1100/1400 I/O Image for PowerFlex 700S Series Drives (32-bit Reference/Feedback and 32-bit Datalinks)

Word	Output I/O
0	Logic Command
1	Reference (LSW)
2	Reference (MSW)
3	Datalink In A1 (LSW)
4	Datalink In A1 (MSW)
5	Datalink In A2 (LSW)
6	Datalink In A2 (MSW)
7	Datalink In B1 (LSW)
8	Datalink In B1 (MSW)
9	Datalink In B2 (LSW)
10	Datalink In B2 (MSW)
11	Datalink In C1 (LSW)
12	Datalink In C1 (MSW)
13	Datalink In C2 (LSW)
14	Datalink In C2 (MSW)
15	Datalink In D1 (LSW)
16	Datalink In D1 (MSW)
17	Datalink In D2 (LSW)
18	Datalink In D2 (MSW)

Word	Input I/O
0	Logic Status
1	Feedback (LSW)
2	Feedback (MSW)
3	Datalink Out A1 (LSW)
4	Datalink Out A1 (MSW)
5	Datalink Out A2 (LSW)
6	Datalink Out A2 (MSW)
7	Datalink Out B1 (LSW)
8	Datalink Out B1 (MSW)
9	Datalink Out B2 (LSW)
10	Datalink Out B2 (MSW)
11	Datalink Out C1 (LSW)
12	Datalink Out C1 (MSW)
13	Datalink Out C2 (LSW)
14	Datalink Out C2 (MSW)
15	Datalink Out D1 (LSW)
16	Datalink Out D1 (MSW)
17	Datalink Out D2 (LSW)
18	Datalink Out D2 (MSW)

Using Logic Command/ Status

The Logic Command is a 16-bit word of control data produced by the scanner and consumed by the adapter. The Logic Status is a 16-bit word of status data produced by the adapter and consumed by the scanner.

This manual contains the bit definitions for most compatible products available at the time of publication in Appendix D, Logic Command/Status Words. For other products, see their documentation.

Using Reference/Feedback

The Reference is produced by the controller and consumed by the adapter. The Feedback is produced by the adapter and consumed by the controller. The size of the Reference/Feedback is determined by the drive and displayed using adapter **Parameter 20 - [Ref/Fdbk Size]**.

Size	Valid Values
16-bit	-32768 to 32767
32-bit	-2147483648 to 2147483647

When the Reference and Feedback are enabled and a ControlLogix controller with a device Add-on Profile or Classic Profile is used, specific controller tags are automatically created, sized (16-bit or 32-bit), and placed in the I/O image.

PowerFlex 7-Class Drives

The Reference value is an unscaled value; it is NOT in Hertz or RPM. The Reference uses a '32767' scale. The '32767' endpoint of the scale is equal to the value of drive parameter 55 - [Maximum Freq], which has a default value of 130 Hz. For all PowerFlex 70/700 drives, default scaling is 0...15123 which is equal to 0...60.0 Hz. This is based on the formula shown below. Reference scaling is limited by drive parameter 82 - [Maximum Speed]. If the default value of 60 Hz. for parameter 82 - [Maximum Speed] is changed, the speed Reference scaling also changes. To determine Reference scaling, use the following formula:

(Parameter 82 ÷ Parameter 55) * 32767 = Scaling

Using drive parameter 82 and 55 default values, speed Reference scaling is:

(60 Hz ÷ 130 Hz) * 32767 = 15123

Therefore, 0...15123 = 0...60.0 Hz.

If parameter 82 - [Maximum Speed] is changed to 90 Hz, then:

(90 Hz ÷ 130 Hz) * 32767 = 22685

Therefore, 0...22685 = 0...90.0 Hz.

A graphic representation of this Reference scaling is shown below.

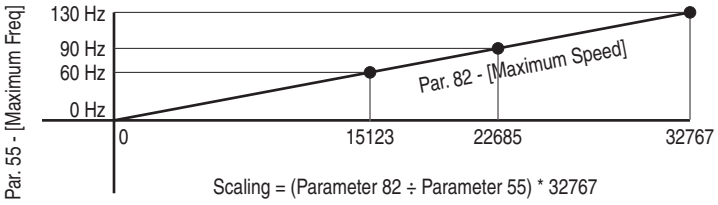

For PowerFlex 70 EC drives, firmware 2.xxx or later, or PowerFlex 700 VC drives, firmware 3.xxx or later, drive parameter 298 - [DPI Ref Select] was added to simplify scaling for the speed Reference. When drive parameter 298 - [DPI Ref Select] is set to its default '0' (Max Freq), the speed Reference scaling is as shown above. However, when parameter 298 - [DPI Ref Select] is set to '1' (Max Speed), the speed Reference scaling is equal to parameter 82 - [Max Speed]:

Parameter 82 = Scaling

Using the parameter 82 default value, speed Reference scaling is:

0...32767 = 0...60.0 Hz.

If parameter 82 - [Maximum Speed] is changed to 90 Hz, then:

90 Hz = 32767

Speed Feedback uses the same scaling as the speed Reference.

TIP For PowerFlex 700 VC drives, firmware 3.xxx or later, parameter 299 - [DPI Fdbk Select] enables you to select the feedback data coming from the drive over DPI. The default is 'Speed Fdbk' in Hz or RPM determined by parameter 079 - [Speed Units]. The data selection for parameter 299 is also displayed on the 1st line of the HIM and on DriveExplorer and DriveExecutive software screens in the drive status area of the screen.

The controller in the system sends a reference to the SMC, but it is not used for control purposes in the current release.

The SMC products use the feedback to send motor current information.

Using Datalinks

A Datalink is a mechanism used by PowerFlex drives and SMCs to transfer data to and from the controller. Datalinks allow a device parameter value to be read or written without using an Explicit Message. When enabled, each Datalink occupies two 16-bit or 32-bit words in both the input and output image. Use adapter **Parameter 21 - [Datalink Size]** to determine whether the drive uses 16-bit or 32-bit words for Datalinks.

Rules for Using Datalinks

- Each set of Datalink parameters in a device can be used by only one adapter. If more than one adapter is connected to a single device, multiple adapters cannot use the same Datalink.
- Parameter settings in the device determine the data passed through the Datalink mechanism. See the documentation for your device.
- When you use a Datalink to change a value, the value is NOT written to the Nonvolatile Storage (NVS). The value is stored in volatile memory and lost when the device loses power. Therefore, use Datalinks when you need to change a value of a parameter frequently.

Using 16-Bit Datalinks to Read/Write 32-Bit Parameters

This subsection only pertains to the SMC Flex and PowerFlex 70 (SC or EC), PowerFlex 700 (SC), and PowerFlex 700H drives which use 16-bit Datalinks. To read or write a 32-bit parameter using 16-bit Datalinks, typically both Datalinks of a pair (A, B, C, D) are set to the same 32-bit parameter. For example, to read parameter 10 - [Elapsed Run Time] in a PowerFlex 70 drive, both Datalink A1 Out (Parameter 310) and Datalink A2 Out (Parameter 311) are set to '10'. Datalink A1 Out will contain the least significant word (LSW) and Datalink A2 Out will contain the most significant word (MSW).

32-bit data is stored in binary as follows:

MSW	2^{31} through 2^{16}
LSW	2^{15} through 2^{0}

In this example, the parameter 10 - [Elapsed Run Time] value of 6553.9 Hrs is read as '6553.9' in Datalink A1 Out (Parameter 310) and Datalink A2 Out (Parameter 311).

Datalink	Word	Parameter	Data (Hex)
A1 Out	LSW	10	0003
A2 Out	MSW	10	0001

Conversion Example:

Parameter 010 - [Elapsed Run Time] = 6553.9 Hrs
MSW = $0001_{hex} = 0001_{binary} = 2^{16} = 65536$
LSW = 0003_{hex} =3
Engineering Value = 65536 + 3 = 65539
Parameter 10 Displayed Value = 6553.9 Hrs

Regardless of the Datalink combination, Datalink x1 Out will always contain the LSW and Datalink x2 Out will always contain the MSW. In the following example, the PowerFlex 70 drive parameter 242 - [Power Up Marker] contains a value of 88.4541 hours.

Datalink	Word	Parameter	Data (Hex)
A2 Out	MSW	242	000D
B1 Out	LSW	242	7F3D

Conversion Example:

Parameter 242 - [Power Up Marker] = 88.4541 hours
MSW = $000D_{hex} = 1101_{binary} = 2^{19} + 2^{18} + 2^{16} = 851968$
LSW = $7F3D_{hex} = 32573$
Engineering Value = 851968 + 32573 = 884541
Parameter 242 Displayed Value = 88.4541 Hrs

Example Ladder Logic Program Information

The example ladder logic programs in the sections of this chapter are intended for and operate PowerFlex 7-Class drives and SMC Flex controllers.

Functions of the Example Programs

The example programs enable you to do the following:

- Receive Logic Status information from the drive.
- Send a Logic Command to control the drive (for example, start, stop).
- Send a Reference to the drive and receive Feedback from the drive.
- Send/receive Datalink data to/from the drive.

Logic Command/Status Words

These examples use the Logic Command word and Logic Status word for PowerFlex 70/700 drives. See Appendix D to view details. The definition of the bits in these words may vary if you are using a different DPI device. See the documentation for your device.

ControlLogix Controller Example

Creating Ladder Logic Using the RSLogix 5000 Device Add-on Profiles, Version 16.00 or Later

Because the device Add-on Profile automatically created descriptive controller tags (Figure 9) for the entire I/O image in Chapter 4, you can use these tags to directly control and monitor the device without creating any ladder logic program. However, if you intend to use Human Machine Interface devices (PanelView, and so forth) to operate the device and view its status, you will need to create descriptive user-defined Program tags (Figure 19) and a ladder logic program that will pass the Controller tag data to the Program tags.

Figure 19 - ControlLogix Program Tags for Device Add-on Profile Ladder Logic Program Example

Name	Style	Data Type
Command_Clear_Faults	Decimal	BOOL
Command_Forward_Reverse	Decimal	BOOL
Command_Jog	Decimal	BOOL
Command_Start	Decimal	BOOL
Command_Stop	Decimal	BOOL
⊞ Speed_Feedback	Decimal	DINT
⊞ Speed_Reference	Decimal	DINT
Status_Active	Decimal	BOOL
Status_At_Speed	Decimal	BOOL
Status_Faulted	Decimal	BOOL
Status_Forward	Decimal	BOOL
Status_Ready	Decimal	BOOL
Status_Reverse	Decimal	BOOL

An example ladder logic program that uses the automatically created descriptive Controller tags and passes their data to the user-defined Program tags is shown in Figure 20 and Figure 21. Note that the prefix for the device Controller tags is determined by the name assigned when configuring the I/O (Chapter 4).

Figure 20 - ControlLogix Example Ladder Logic Program Using a Device Add-on Profile for Logic Status/Feedback

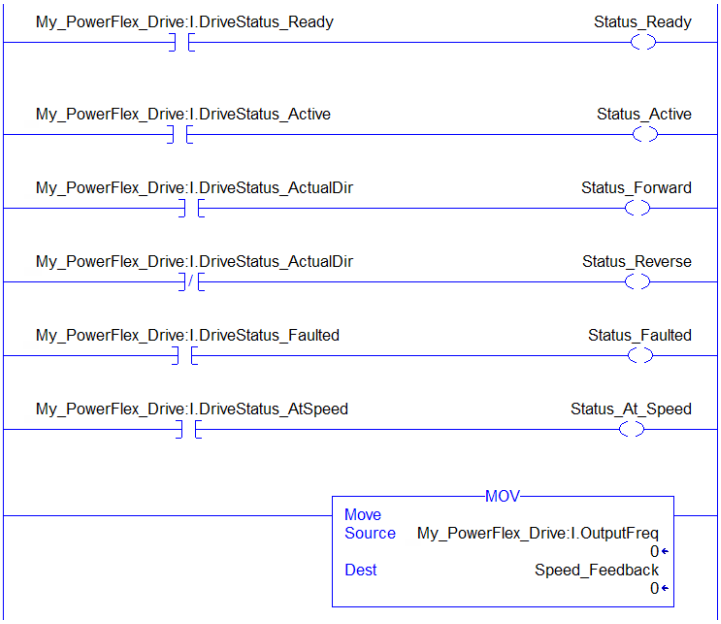

Figure 21 - ControlLogix Example Ladder Logic Program Using a Device Add-on Profile for Logic Command/Reference

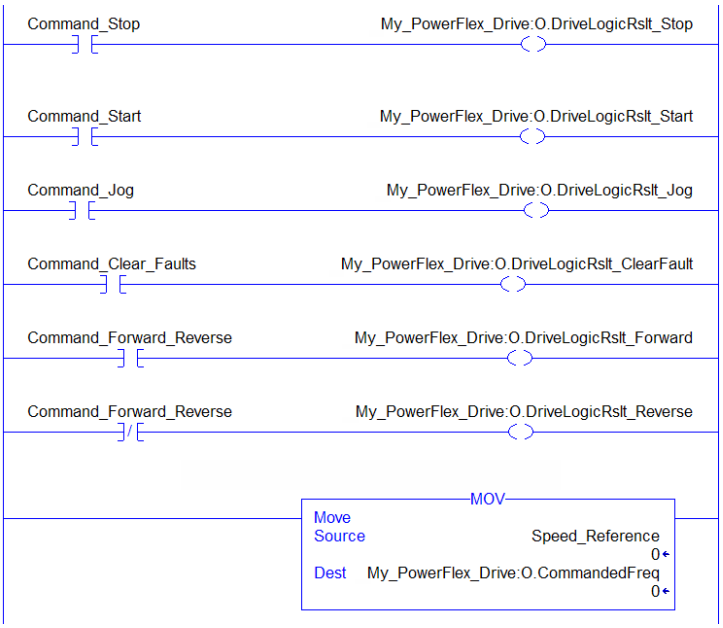

Creating Ladder Logic Using the RSLogix 5000 Classic Profile, Versions 1300…15.00

Since the RSLogix 5000 Classic Profile has been significantly improved upon by RSLogix 5000 device Add-on Profiles, version 16.00 or later, we highly

recommended using the RSLogix 5000 device Add-on Profiles to take advantage of their benefits (more intuitive, time saving, and less likely to make ladder logic program errors).

Creating Ladder Logic Using the RSLogix 5000 Generic Profile, All Versions

Drive and Adapter Parameter Settings

The following drive and adapter settings were used for the example ladder logic program in this section.

Device	Parameter	Value	Description
PowerFlex 70 EC Drive	90 - [Speed Ref A Sel]	22 (DPI Port 5)	Assigns 20-COMM-ER to be used for the Reference.
	300 - [Data In A1]	140	Points to Par. 140 - [Accel Time 1]
	301 - [Data In A2]	142	Points to Par. 142 - [Decel Time 1]
	302 - [Data In B1]	100	Points to Par. 100 - [Jog Speed]
	303 - [Data In B2]	155	Points to Par. 155 - [Stop Mode A]
	304 - [Data In C1]	101	Points to Par. 101 - [Preset Speed 1]
	305 - [Data In C2]	102	Points to Par. 102 - [Preset Speed 2]
	306 - [Data In D1]	103	Points to Par. 103 - [Preset Speed 3]
	307 - [Data In D2]	104	Points to Par. 104 - [Preset Speed 4]
	310 - [Data Out A1]	140	Points to Par. 140 - [Accel Time 1]
	311 - [Data Out A2]	142	Points to Par. 142 - [Decel Time 1]
	312 - [Data Out B1]	100	Points to Par. 100 - [Jog Speed]
	313 - [Data Out B2]	155	Points to Par. 155 - [Stop Mode A]
	314 - [Data Out C1]	101	Points to Par. 101 - [Preset Speed 1]
	315 - [Data Out C2]	102	Points to Par. 102 - [Preset Speed 2]
	316 - [Data Out D1]	103	Points to Par. 103 - [Preset Speed 3]
	317 - [Data Out D2]	104	Points to Par. 104 - [Preset Speed 4]
20-COMM-ER Adapter	04 - [IP Addr Cfg 1] ⋮ 07 - [IP Addr Cfg 4]	10.91.100.79	IP address for the adapter.
	08 - [Subnet Cfg 1] ⋮ 11 - [Subnet Cfg 4]	255.255.248.0	Subnet mask for the adapter.
	23 - [DPI I/O Cfg]	xxx1 1111	Enables Cmd/Ref and Datalinks A…D.
	35 - [M-S Input]	xxx1 1111	Configures the I/O Data to be transferred from the controller on the network to the drive.
	36 - [M-S Output]	xxx1 1111	Configures the I/O Data to be transferred from the drive to the controller on the network.

TIP Data In parameters are inputs into the device that come from controller outputs (for example, data to write to a device parameter). Data Out parameters are outputs from the device that go to controller inputs (for example, data to read a device parameter).

Controller Tags

When you add the adapter and drive to the I/O configuration (Chapter 4), RSLogix 5000 software automatically creates generic (non-descriptive) controller tags for them. In this example program, the following controller tags are used.

Figure 22 - ControlLogix Controller Tags for Drive Generic Profile Example Ladder Logic Program

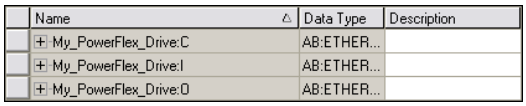

Name	Data Type	Description
⊞ My_PowerFlex_Drive:C	AB:ETHER...	
⊞ My_PowerFlex_Drive:I	AB:ETHER...	
⊞ My_PowerFlex_Drive:O	AB:ETHER...	

You can expand the Input and Output tags to reveal the input and output configuration.

Figure 23 - ControlLogix Input Image for Drive Generic Profile Example Ladder Logic Program

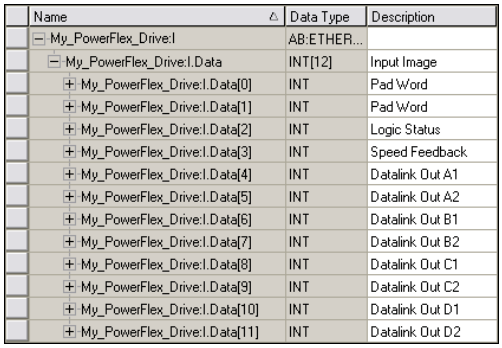

Name	Data Type	Description
⊟ My_PowerFlex_Drive:I	AB:ETHER...	
⊟ My_PowerFlex_Drive:I.Data	INT[12]	Input Image
⊞ My_PowerFlex_Drive:I.Data[0]	INT	Pad Word
⊞ My_PowerFlex_Drive:I.Data[1]	INT	Pad Word
⊞ My_PowerFlex_Drive:I.Data[2]	INT	Logic Status
⊞ My_PowerFlex_Drive:I.Data[3]	INT	Speed Feedback
⊞ My_PowerFlex_Drive:I.Data[4]	INT	Datalink Out A1
⊞ My_PowerFlex_Drive:I.Data[5]	INT	Datalink Out A2
⊞ My_PowerFlex_Drive:I.Data[6]	INT	Datalink Out B1
⊞ My_PowerFlex_Drive:I.Data[7]	INT	Datalink Out B2
⊞ My_PowerFlex_Drive:I.Data[8]	INT	Datalink Out C1
⊞ My_PowerFlex_Drive:I.Data[9]	INT	Datalink Out C2
⊞ My_PowerFlex_Drive:I.Data[10]	INT	Datalink Out D1
⊞ My_PowerFlex_Drive:I.Data[11]	INT	Datalink Out D2

PowerFlex 70 Drive
16-bit Speed Feedback and Datalinks

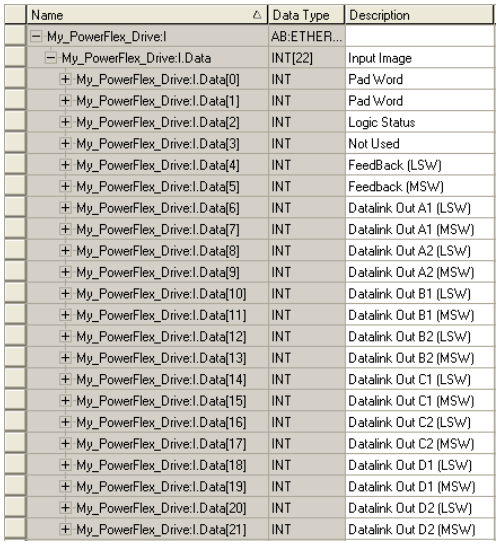

Name	Data Type	Description
⊟ My_PowerFlex_Drive:I	AB:ETHER...	
⊟ My_PowerFlex_Drive:I.Data	INT[22]	Input Image
⊞ My_PowerFlex_Drive:I.Data[0]	INT	Pad Word
⊞ My_PowerFlex_Drive:I.Data[1]	INT	Pad Word
⊞ My_PowerFlex_Drive:I.Data[2]	INT	Logic Status
⊞ My_PowerFlex_Drive:I.Data[3]	INT	Not Used
⊞ My_PowerFlex_Drive:I.Data[4]	INT	FeedBack (LSW)
⊞ My_PowerFlex_Drive:I.Data[5]	INT	Feedback (MSW)
⊞ My_PowerFlex_Drive:I.Data[6]	INT	Datalink Out A1 (LSW)
⊞ My_PowerFlex_Drive:I.Data[7]	INT	Datalink Out A1 (MSW)
⊞ My_PowerFlex_Drive:I.Data[8]	INT	Datalink Out A2 (LSW)
⊞ My_PowerFlex_Drive:I.Data[9]	INT	Datalink Out A2 (MSW)
⊞ My_PowerFlex_Drive:I.Data[10]	INT	Datalink Out B1 (LSW)
⊞ My_PowerFlex_Drive:I.Data[11]	INT	Datalink Out B1 (MSW)
⊞ My_PowerFlex_Drive:I.Data[12]	INT	Datalink Out B2 (LSW)
⊞ My_PowerFlex_Drive:I.Data[13]	INT	Datalink Out B2 (MSW)
⊞ My_PowerFlex_Drive:I.Data[14]	INT	Datalink Out C1 (LSW)
⊞ My_PowerFlex_Drive:I.Data[15]	INT	Datalink Out C1 (MSW)
⊞ My_PowerFlex_Drive:I.Data[16]	INT	Datalink Out C2 (LSW)
⊞ My_PowerFlex_Drive:I.Data[17]	INT	Datalink Out C2 (MSW)
⊞ My_PowerFlex_Drive:I.Data[18]	INT	Datalink Out D1 (LSW)
⊞ My_PowerFlex_Drive:I.Data[19]	INT	Datalink Out D1 (MSW)
⊞ My_PowerFlex_Drive:I.Data[20]	INT	Datalink Out D2 (LSW)
⊞ My_PowerFlex_Drive:I.Data[21]	INT	Datalink Out D2 (MSW)

PowerFlex 700S-Series Drive
32-bit Speed Feedback and Datalinks

Figure 24 - ControlLogix Output Image for Drive Generic Profile Example Ladder Logic Program

Name	Data Type	Description
My_PowerFlex_Drive:O	AB:ETHER...	
My_PowerFlex_Drive:O.Data	INT[10]	Output Image
My_PowerFlex_Drive:O.Data[0]	INT	Logic Command
My_PowerFlex_Drive:O.Data[1]	INT	Speed Reference
My_PowerFlex_Drive:O.Data[2]	INT	Datalink In A1
My_PowerFlex_Drive:O.Data[3]	INT	Datalink In A2
My_PowerFlex_Drive:O.Data[4]	INT	Datalink In B1
My_PowerFlex_Drive:O.Data[5]	INT	Datalink In B2
My_PowerFlex_Drive:O.Data[6]	INT	Datalink In C1
My_PowerFlex_Drive:O.Data[7]	INT	Datalink In C2
My_PowerFlex_Drive:O.Data[8]	INT	Datalink In D1
My_PowerFlex_Drive:O.Data[9]	INT	Datalink In D2

PowerFlex 70 Drive
16-bit Speed Reference and Datalinks

Name	Data Type	Description
My_PowerFlex_Drive:O	AB:ETHER...	
My_PowerFlex_Drive:O.Data	INT[20]	Output Image
My_PowerFlex_Drive:O.Data[0]	INT	Logic Command
My_PowerFlex_Drive:O.Data[1]	INT	Not Used
My_PowerFlex_Drive:O.Data[2]	INT	Reference (LSW)
My_PowerFlex_Drive:O.Data[3]	INT	Reference (MSW)
My_PowerFlex_Drive:O.Data[4]	INT	Datalink In A1 (LSW)
My_PowerFlex_Drive:O.Data[5]	INT	Datalink In A1 (MSW)
My_PowerFlex_Drive:O.Data[6]	INT	Datalink In A2 (LSW)
My_PowerFlex_Drive:O.Data[7]	INT	Datalink In A2 (MSW)
My_PowerFlex_Drive:O.Data[8]	INT	Datalink In B1 (LSW)
My_PowerFlex_Drive:O.Data[9]	INT	Datalink In B1 (MSW)
My_PowerFlex_Drive:O.Data[10]	INT	Datalink In B2 (LSW)
My_PowerFlex_Drive:O.Data[11]	INT	Datalink In B2 (MSW)
My_PowerFlex_Drive:O.Data[12]	INT	Datalink In C1 (LSW)
My_PowerFlex_Drive:O.Data[13]	INT	Datalink In C1 (MSW)
My_PowerFlex_Drive:O.Data[14]	INT	Datalink In C2 (LSW)
My_PowerFlex_Drive:O.Data[15]	INT	Datalink In C2 (MSW)
My_PowerFlex_Drive:O.Data[16]	INT	Datalink In D1 (LSW)
My_PowerFlex_Drive:O.Data[17]	INT	Datalink In D1 (MSW)
My_PowerFlex_Drive:O.Data[18]	INT	Datalink In D2 (LSW)
My_PowerFlex_Drive:O.Data[19]	INT	Datalink In D2 (MSW)

PowerFlex 700S-Series Drive
32-bit Speed Reference and Datalinks

Program Tags

To use the Controller tags that are automatically created, you need to create the following Program tags for this example program.

Figure 25 - ControlLogix Program Tags for Drive Generic Profile Example Ladder Logic Program

Name	Style	Data Type
Command_Clear_Faults	Decimal	BOOL
Command_Forward_Reverse	Decimal	BOOL
Command_Jog	Decimal	BOOL
Command_Start	Decimal	BOOL
Command_Stop	Decimal	BOOL
Speed_Feedback	Decimal	DINT
Speed_Reference	Decimal	DINT
Status_Active	Decimal	BOOL
Status_At_Speed	Decimal	BOOL
Status_Faulted	Decimal	BOOL
Status_Forward	Decimal	BOOL
Status_Ready	Decimal	BOOL
Status_Reverse	Decimal	BOOL

For information on speed Reference and Feedback scaling, see PowerFlex 7-Class Drives on page 85.

Figure 26 - ControlLogix Example Ladder Logic Program Using a Drive Generic Profile for Logic Status/Feedback

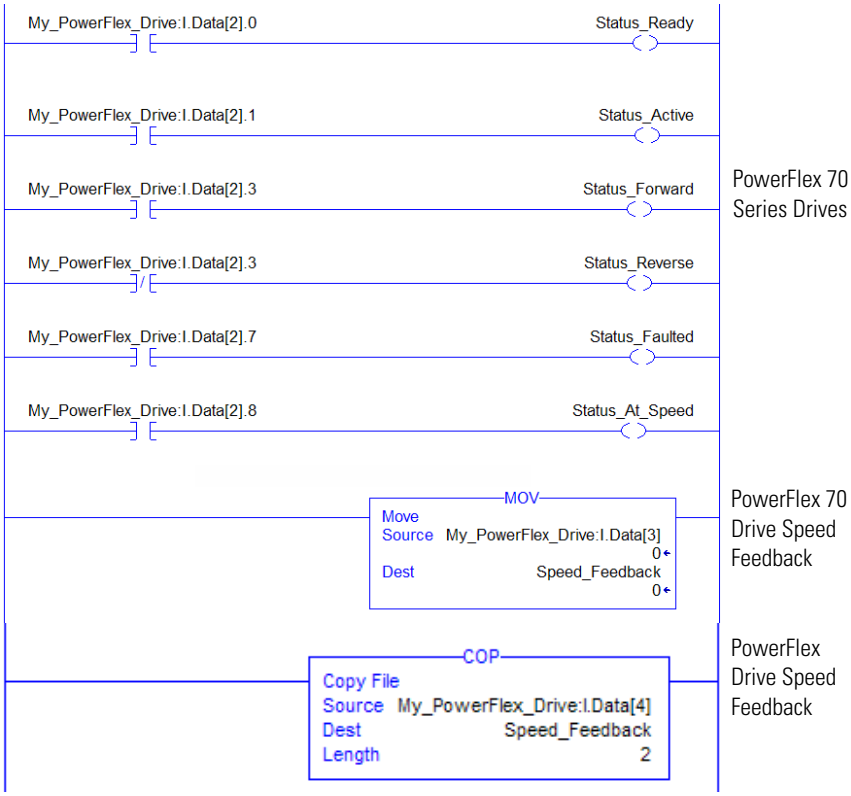

Figure 27 - ControlLogix Example Ladder Logic Program Using a Drive Generic Profile for Logic Command/Reference

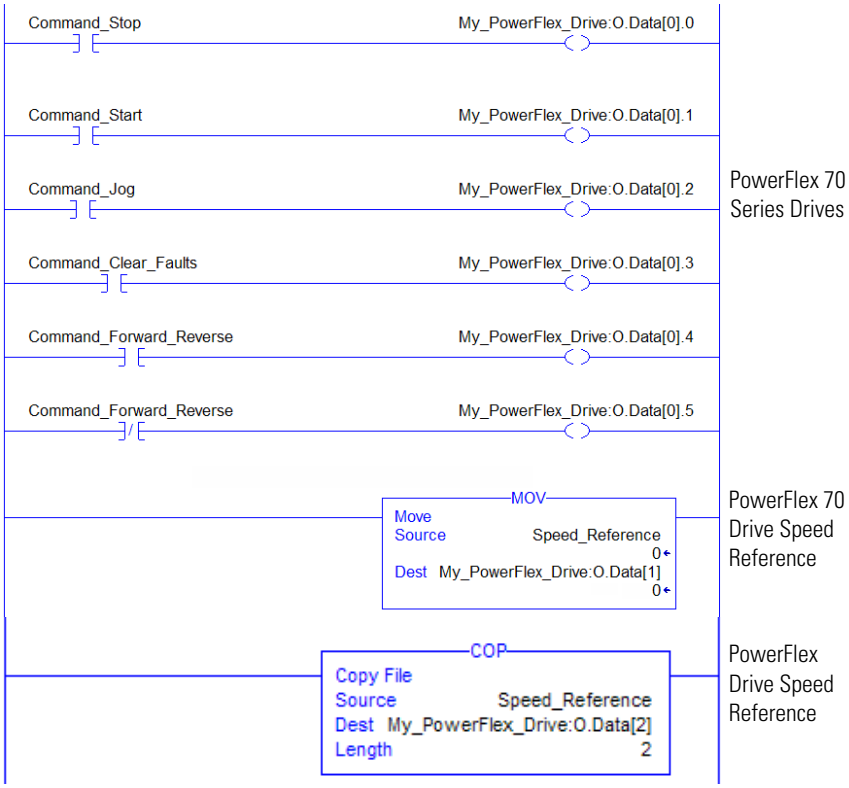

Example Datalink Data

The Datalink data used in the example program is shown in Figure 28. Note that to describe the parameters to which the Datalinks are assigned, you may want to add descriptions to the automatically-created generic controller tags or create a User Defined Data Types (UDDT).

Figure 28 - ControlLogix Example Datalinks for Ladder Logic Program Using a Drive Generic Profile

Name	Value	Data Type	Description
My_PowerFlex_Drive:I	{...}	AB:ETHER...	
My_PowerFlex_Drive:I.Data	{...}	INT[12]	Input Image
My_PowerFlex_Drive:I.Data[0]	0	INT	Pad Word
My_PowerFlex_Drive:I.Data[1]	0	INT	Pad Word
My_PowerFlex_Drive:I.Data[2]	0	INT	Logic Status
My_PowerFlex_Drive:I.Data[3]	0	INT	Speed Feedback
My_PowerFlex_Drive:I.Data[4]	50	INT	Datalink Out A1
My_PowerFlex_Drive:I.Data[5]	50	INT	Datalink Out A2
My_PowerFlex_Drive:I.Data[6]	100	INT	Datalink Out B1
My_PowerFlex_Drive:I.Data[7]	1	INT	Datalink Out B2
My_PowerFlex_Drive:I.Data[8]	200	INT	Datalink Out C1
My_PowerFlex_Drive:I.Data[9]	300	INT	Datalink Out C2
My_PowerFlex_Drive:I.Data[10]	400	INT	Datalink Out D1
My_PowerFlex_Drive:I.Data[11]	500	INT	Datalink Out D2
My_PowerFlex_Drive:O	{...}	AB:ETHER...	
My_PowerFlex_Drive:O.Data	{...}	INT[10]	Output Image
My_PowerFlex_Drive:O.Data[0]	0	INT	Logic Command
My_PowerFlex_Drive:O.Data[1]	0	INT	Speed Reference
My_PowerFlex_Drive:O.Data[2]	50	INT	Datalink In A1
My_PowerFlex_Drive:O.Data[3]	50	INT	Datalink In A2
My_PowerFlex_Drive:O.Data[4]	100	INT	Datalink In B1
My_PowerFlex_Drive:O.Data[5]	1	INT	Datalink In B2
My_PowerFlex_Drive:O.Data[6]	200	INT	Datalink In C1
My_PowerFlex_Drive:O.Data[7]	300	INT	Datalink In C2
My_PowerFlex_Drive:O.Data[8]	400	INT	Datalink In D1
My_PowerFlex_Drive:O.Data[9]	500	INT	Datalink In D2

PowerFlex 70 Drive

Name	Value	Data Type	Description
My_PowerFlex_Drive:I	{...}	AB:ETHER...	
My_PowerFlex_Drive:I.Data	{...}	INT[22]	Input Image
My_PowerFlex_Drive:I.Data[0]	0	INT	Pad Word
My_PowerFlex_Drive:I.Data[1]	0	INT	Pad Word
My_PowerFlex_Drive:I.Data[2]	1295	INT	Logic Status
My_PowerFlex_Drive:I.Data[3]	0	INT	Not Used
My_PowerFlex_Drive:I.Data[4]	25000	INT	Feedback (LSW)
My_PowerFlex_Drive:I.Data[5]	0	INT	Feedback (MSW)
My_PowerFlex_Drive:I.Data[6]	-26970	INT	Datalink Out A1 (LSW)
My_PowerFlex_Drive:I.Data[7]	17432	INT	Datalink Out A1 (MSW)
My_PowerFlex_Drive:I.Data[8]	15562	INT	Datalink Out A2 (LSW)
My_PowerFlex_Drive:I.Data[9]	5457	INT	Datalink Out A2 (MSW)
My_PowerFlex_Drive:I.Data[10]	0	INT	Datalink Out B1 (LSW)
My_PowerFlex_Drive:I.Data[11]	16840	INT	Datalink Out B1 (MSW)
My_PowerFlex_Drive:I.Data[12]	0	INT	Datalink Out B2 (LSW)
My_PowerFlex_Drive:I.Data[13]	0	INT	Datalink Out B2 (MSW)
My_PowerFlex_Drive:I.Data[14]	0	INT	Datalink Out C1 (LSW)
My_PowerFlex_Drive:I.Data[15]	0	INT	Datalink Out C1 (MSW)
My_PowerFlex_Drive:I.Data[16]	0	INT	Datalink Out C2 (LSW)
My_PowerFlex_Drive:I.Data[17]	0	INT	Datalink Out C2 (MSW)
My_PowerFlex_Drive:I.Data[18]	0	INT	Datalink Out D1 (LSW)
My_PowerFlex_Drive:I.Data[19]	0	INT	Datalink Out D1 (MSW)
My_PowerFlex_Drive:I.Data[20]	0	INT	Datalink Out D2 (LSW)
My_PowerFlex_Drive:I.Data[21]	0	INT	Datalink Out D2 (MSW)
My_PowerFlex_Drive:O	{...}	AB:ETHER...	
My_PowerFlex_Drive:O.Data	{...}	INT[20]	Output Image
My_PowerFlex_Drive:O.Data[0]	0	INT	Logic Command
My_PowerFlex_Drive:O.Data[1]	0	INT	Not Used
My_PowerFlex_Drive:O.Data[2]	25000	INT	Reference (LSW)
My_PowerFlex_Drive:O.Data[3]	0	INT	Reference (MSW)
My_PowerFlex_Drive:O.Data[4]	0	INT	Datalink In A1 (LSW)
My_PowerFlex_Drive:O.Data[5]	16680	INT	Datalink In A1 (MSW)
My_PowerFlex_Drive:O.Data[6]	4430	INT	Datalink In A2 (LSW)
My_PowerFlex_Drive:O.Data[7]	1909	INT	Datalink In A2 (MSW)
My_PowerFlex_Drive:O.Data[8]	-2621	INT	Datalink In B1 (LSW)
My_PowerFlex_Drive:O.Data[9]	16664	INT	Datalink In B1 (MSW)
My_PowerFlex_Drive:O.Data[10]	0	INT	Datalink In B2 (LSW)
My_PowerFlex_Drive:O.Data[11]	0	INT	Datalink In B2 (MSW)

PowerFlex 700S-Series Drive

For PowerFlex 7-Class drives, the scaling may need to be multiplied by 10 or 100, depending on the parameter. For more information, see Using Datalinks on page 86.

MicroLogix 1100/1400 Controller Example

Drive and Adapter Parameter Settings

The following drive and adapter settings were used for the example ladder logic program in this section.

Device	Parameter	Value	Description
PowerFlex 70 EC Drive	90 - [Speed Ref A Sel]	22 (DPI Port 5)	Assigns 20-COMM-ER to be used for the Reference.
	300 - [Data In A1]	140	Points to Par. 140 - [Accel Time 1]
	301 - [Data In A2]	142	Points to Par. 142 - [Decel Time 1]
	302 - [Data In B1]	100	Points to Par. 100 - [Jog Speed]
	303 - [Data In B2]	155	Points to Par. 155 - [Stop Mode A]
	304 - [Data In C1]	101	Points to Par. 101 - [Preset Speed 1]
	305 - [Data In C2]	102	Points to Par. 102 - [Preset Speed 2]
	306 - [Data In D1]	103	Points to Par. 103 - [Preset Speed 3]
	307 - [Data In D2]	104	Points to Par. 104 - [Preset Speed 4]
	310 - [Data Out A1]	140	Points to Par. 140 - [Accel Time 1]
	311 - [Data Out A2]	142	Points to Par. 142 - [Decel Time 1]
	312 - [Data Out B1]	100	Points to Par. 100 - [Jog Speed]
	313 - [Data Out B2]	155	Points to Par. 155 - [Stop Mode A]
	314 - [Data Out C1]	101	Points to Par. 101 - [Preset Speed 1]
	315 - [Data Out C2]	102	Points to Par. 102 - [Preset Speed 2]
	316 - [Data Out D1]	103	Points to Par. 103 - [Preset Speed 3]
	317 - [Data Out D2]	104	Points to Par. 104 - [Preset Speed 4]
20-COMM-ER Adapter	04 - [IP Addr Cfg 1] ⋮ 07 - [IP Addr Cfg 4]	10.91.100.79	IP address for the adapter.
	08 - [Subnet Cfg 1] ⋮ 11 - [Subnet Cfg 4]	255.255.248.0	Subnet mask for the adapter.
	23 - [DPI I/O Cfg]	xxx1 1111	Enables Cmd/Ref and Datalinks A…D.
	35 - [M-S Input]	xxx1 1111	Configures the I/O Data to be transferred from the controller on the network to the drive.
	36 - [M-S Output]	xxx1 1111	Configures the I/O Data to be transferred from the drive to the controller on the network.

TIP Data In parameters are inputs into the drive that come from controller outputs (for example, data to write to a drive parameter). Data Out parameters are outputs from the drive that go to controller inputs (for example, data to read a drive parameter).

TIP When using a drive that has 16-bit Datalinks (PowerFlex 70, PowerFlex 700, and PowerFlex 700H drives) to transfer a 32-bit parameter, two contiguous drive Datalink parameters (for example, Data Out A1/A2, B1/B2, etc.) are required. To determine if a parameter is a 32-bit parameter, see the Parameter section in the drive documentation and look for a symbol in the 'No.' column. (All parameters in PowerFlex 700 Series B drives are 32-bit parameters.) For example, parameter 3 - [Output Current] in a PowerFlex 70 EC drive is a 32-bit parameter. When using a drive that has 32-bit Datalinks (PowerFlex 700 VC and PowerFlex 700S), only one drive Datalink parameter is required to transfer any parameter.

Understanding Controller Data Table Addresses

Because MicroLogix 1100/1400 controllers are 16-bit platforms and are used with the 32-bit 20-COMM-ER adapter, the data will be transposed from the least-significant word (LSW) to the most-significant word (MSW) in the controller.

When the I/O was configured (Chapter 4), an available data table address (N20) was used. Figure 29 shows the entire data file address structure for this example.

Figure 29 - Data File Table for Example Ladder Logic Program

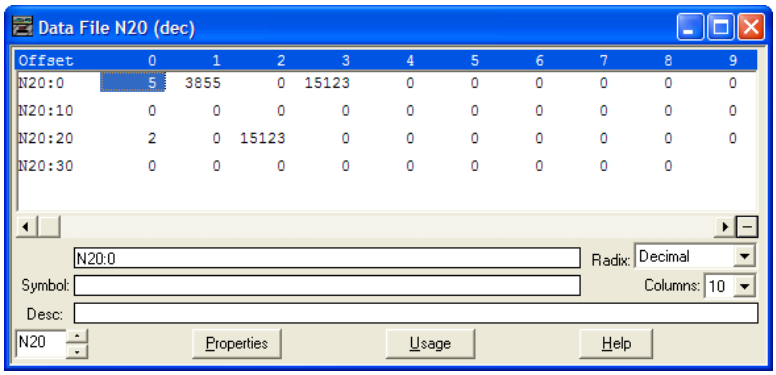

Important: The N20:0 data table address in this example is used to set a control timeout value (in seconds) which determines how long it will take the adapter to detect a communication loss. Enter a valid value (1…32767) for N20:0. A value of zero (0) is not valid, because it disables the timeout and all I/O connections (Logic Command/Status, Reference/Feedback, and Datalinks) intended for the drive will not execute. A timeout value of 5…20 seconds is recommended.

Depending on the drive you are using, Table 11, Table 12, Table 13, or Table 14 show the I/O definitions as they relate to the N20 data table (Figure 29) being used in this example.

When using PowerFlex 70 or 70 EC, PowerFlex 700, PowerFlex 700VC drives, or SMC Flex controllers—which all contain INT (16-bit format) data types, you will read from and write to the MSW data table address in the controller.

When using PowerFlex 700 VC drives or SMC-50 controllers, which contain DINT (32-bit format) data types, you will read from and write to the LSW data table address in the controller.

When using PowerFlex 700S drives, which contain both DINT (32-bit format) and REAL (floating point format) data types, you will always read from and write to the LSW data table address in the controller first. Then if the data value exceeds 16 bits, the remaining value will be in the MSW data table address.

Table 11 - Controller Data Table Addresses for PowerFlex 70/70 EC, PowerFlex 700 Drives, and SMC Flex Controllers

Data Table Address	Description
N20:1	Logic Status (see Appendix D)
N20:2	Reserved
N20:3	Speed Feedback
N20:4	Value of parameter assigned to Parameter 310 [Data Out A1] LSW
N20:5	Value of parameter assigned to Parameter 310 [Data Out A1] MSW
N20:6	Value of parameter assigned to Parameter 311 [Data Out A2] LSW
N20:7	Value of parameter assigned to Parameter 311 [Data Out A2] MSW
N20:8	Value of parameter assigned to Parameter 312 [Data Out B1] LSW
N20:9	Value of parameter assigned to Parameter 312 [Data Out B1] MSW
N20:10	Value of parameter assigned to Parameter 313 [Data Out B2] LSW
N20:11	Value of parameter assigned to Parameter 313 [Data Out B2] MSW
N20:12	Value of parameter assigned to Parameter 314 [Data Out C1] LSW
N20:13	Value of parameter assigned to Parameter 314 [Data Out C1] MSW
N20:14	Value of parameter assigned to Parameter 315 [Data Out C2] LSW
N20:15	Value of parameter assigned to Parameter 315 [Data Out C2] MSW
N20:16	Value of parameter assigned to Parameter 316 [Data Out D1] LSW
N20:17	Value of parameter assigned to Parameter 316 [Data Out D1] MSW
N20:18	Value of parameter assigned to Parameter 317 [Data Out D2] LSW
N20:19	Value of parameter assigned to Parameter 317 [Data Out D2] MSW
N20:20	Logic Command (see Appendix D)
N20:21	Reserved
N20:22	Speed Reference
N20:23	Value of parameter assigned to Parameter 300 [Data In A1] LSW
N20:24	Value of parameter assigned to Parameter 300 [Data In A1] MSW
N20:25	Value of parameter assigned to Parameter 301 [Data In A2] LSW
N20:26	Value of parameter assigned to Parameter 301 [Data In A2] MSW
N20:27	Value of parameter assigned to Parameter 302 [Data In B1] LSW
N20:28	Value of parameter assigned to Parameter 302 [Data In B1] MSW
N20:29	Value of parameter assigned to Parameter 303 [Data In B2] LSW
N20:30	Value of parameter assigned to Parameter 303 [Data In B2] MSW
N20:31	Value of parameter assigned to Parameter 304 [Data In C1] LSW
N20:32	Value of parameter assigned to Parameter 304 [Data In C1] MSW
N20:33	Value of parameter assigned to Parameter 305 [Data In C2] LSW
N20:34	Value of parameter assigned to Parameter 305 [Data In C2] MSW
N20:35	Value of parameter assigned to Parameter 306 [Data In D1] LSW
N20:36	Value of parameter assigned to Parameter 306 [Data In D1] MSW
N20:37	Value of parameter assigned to Parameter 307 [Data In D2] LSW
N20:38	Value of parameter assigned to Parameter 307 [Data In D2] MSW

Table 12 - Controller Data Table Addresses for PowerFlex 700 VC Drives and SMC-50 Controllers

Data Table Address	Description
N20:1	Logic Status (see Appendix D)
N20:2	Reserved
N20:3	Speed Feedback
N20:4	Value of parameter assigned to Parameter 310 [Data Out A1] LSW
N20:5	Value of parameter assigned to Parameter 310 [Data Out A1] MSW
N20:6	Value of parameter assigned to Parameter 311 [Data Out A2] LSW
N20:7	Value of parameter assigned to Parameter 311 [Data Out A2] MSW
N20:8	Value of parameter assigned to Parameter 312 [Data Out B1] LSW
N20:9	Value of parameter assigned to Parameter 312 [Data Out B1] MSW
N20:10	Value of parameter assigned to Parameter 313 [Data Out B2] LSW
N20:11	Value of parameter assigned to Parameter 313 [Data Out B2] MSW
N20:12	Value of parameter assigned to Parameter 314 [Data Out C1] LSW
N20:13	Value of parameter assigned to Parameter 314 [Data Out C1] MSW
N20:14	Value of parameter assigned to Parameter 315 [Data Out C2] LSW
N20:15	Value of parameter assigned to Parameter 315 [Data Out C2] MSW
N20:16	Value of parameter assigned to Parameter 316 [Data Out D1] LSW
N20:17	Value of parameter assigned to Parameter 316 [Data Out D1] MSW
N20:18	Value of parameter assigned to Parameter 317 [Data Out D2] LSW
N20:19	Value of parameter assigned to Parameter 317 [Data Out D2] MSW
N20:20	Logic Command (see Appendix D)
N20:21	Reserved
N20:22	Speed Reference
N20:23	Value of parameter assigned to Parameter 300 [Data In A1] LSW
N20:24	Value of parameter assigned to Parameter 300 [Data In A1] MSW
N20:25	Value of parameter assigned to Parameter 301 [Data In A2] LSW
N20:26	Value of parameter assigned to Parameter 301 [Data In A2] MSW
N20:27	Value of parameter assigned to Parameter 302 [Data In B1] LSW
N20:28	Value of parameter assigned to Parameter 302 [Data In B1] MSW
N20:29	Value of parameter assigned to Parameter 303 [Data In B2] LSW
N20:30	Value of parameter assigned to Parameter 303 [Data In B2] MSW
N20:31	Value of parameter assigned to Parameter 304 [Data In C1] LSW
N20:32	Value of parameter assigned to Parameter 304 [Data In C1] MSW
N20:33	Value of parameter assigned to Parameter 305 [Data In C2] LSW
N20:34	Value of parameter assigned to Parameter 305 [Data In C2] MSW
N20:35	Value of parameter assigned to Parameter 306 [Data In D1] LSW
N20:36	Value of parameter assigned to Parameter 306 [Data In D1] MSW
N20:37	Value of parameter assigned to Parameter 307 [Data In D2] LSW
N20:38	Value of parameter assigned to Parameter 307 [Data In D2] MSW

Table 13 - Controller Data Table Addresses for PowerFlex 700S Drives with Phase I Control

Data Table Address	Description
N20:1	Logic Status (see Appendix D)
N20:2	Speed Feedback LSW
N20:3	Speed Feedback MSW
N20:4	Value of parameter assigned to Parameter 724/725 [Data Out A1] LSW
N20:5	Value of parameter assigned to Parameter 724/725 [Data Out A1] MSW
N20:6	Value of parameter assigned to Parameter 726/727 [Data Out A2] LSW
N20:7	Value of parameter assigned to Parameter 726/727 [Data Out A2] MSW
N20:8	Value of parameter assigned to Parameter 728/729 [Data Out B1] LSW
N20:9	Value of parameter assigned to Parameter 728/729 [Data Out B1] MSW
N20:10	Value of parameter assigned to Parameter 730/731 [Data Out B2] LSW
N20:11	Value of parameter assigned to Parameter 730/731 [Data Out B2] MSW
N20:12	Value of parameter assigned to Parameter 732/733 [Data Out C1] LSW
N20:13	Value of parameter assigned to Parameter 732/733 [Data Out C1] MSW
N20:14	Value of parameter assigned to Parameter 734/735 [Data Out C2] LSW
N20:15	Value of parameter assigned to Parameter 734/735 [Data Out C2] MSW
N20:16	Value of parameter assigned to Parameter 736/737 [Data Out D1] LSW
N20:17	Value of parameter assigned to Parameter 736/737 [Data Out D1] MSW
N20:18	Value of parameter assigned to Parameter 738/739 [Data Out D2] LSW
N20:19	Value of parameter assigned to Parameter 738/739 [Data Out D2] MSW
N20:20	Logic Command (see Appendix D)
N20:21	Speed Reference LSW
N20:22	Speed Reference MSW
N20:23	Value of parameter assigned to Parameter 707/708 [Data In A1] LSW
N20:24	Value of parameter assigned to Parameter 707/708 [Data In A1] MSW
N20:25	Value of parameter assigned to Parameter 709/710 [Data In A2] LSW
N20:26	Value of parameter assigned to Parameter 709/710 [Data In A2] MSW
N20:27	Value of parameter assigned to Parameter 711/712 [Data In B1] LSW
N20:28	Value of parameter assigned to Parameter 711/712 [Data In B1] MSW
N20:29	Value of parameter assigned to Parameter 713/714 [Data In B2] LSW
N20:30	Value of parameter assigned to Parameter 713/714 [Data In B2] MSW
N20:31	Value of parameter assigned to Parameter 715/716 [Data In C1] LSW
N20:32	Value of parameter assigned to Parameter 715/716 [Data In C1] MSW
N20:33	Value of parameter assigned to Parameter 717/718 [Data In C2] LSW
N20:34	Value of parameter assigned to Parameter 717/718 [Data In C2] MSW
N20:35	Value of parameter assigned to Parameter 719/720 [Data In D1] LSW
N20:36	Value of parameter assigned to Parameter 719/720 [Data In D1] MSW
N20:37	Value of parameter assigned to Parameter 721/722 [Data In D2] LSW
N20:38	Value of parameter assigned to Parameter 721/722 [Data In D2] MSW

Table 14 - Controller Data Table Addresses for PowerFlex 700S Drives with Phase II Control

Data Table Address	Description
N20:1	Logic Status (see Appendix D)
N20:2	Speed Feedback LSW
N20:3	Speed Feedback MSW
N20:4	Value of parameter assigned to Parameter 660 [DPI Data Out A1] LSW
N20:5	Value of parameter assigned to Parameter 660 [DPI Data Out A1] MSW
N20:6	Value of parameter assigned to Parameter 661 [DPI Data Out A2] LSW
N20:7	Value of parameter assigned to Parameter 661 [DPI Data Out A2] MSW
N20:8	Value of parameter assigned to Parameter 662 [DPI Data Out B1] LSW
N20:9	Value of parameter assigned to Parameter 662 [DPI Data Out B1] MSW
N20:10	Value of parameter assigned to Parameter 663 [DPI Data Out B2] LSW
N20:11	Value of parameter assigned to Parameter 663 [DPI Data Out B2] MSW
N20:12	Value of parameter assigned to Parameter 664 [DPI Data Out C1] LSW
N20:13	Value of parameter assigned to Parameter 664 [DPI Data Out C1] MSW
N20:14	Value of parameter assigned to Parameter 665 [DPI Data Out C2] LSW
N20:15	Value of parameter assigned to Parameter 665 [DPI Data Out C2] MSW
N20:16	Value of parameter assigned to Parameter 666 [DPI Data Out D1] LSW
N20:17	Value of parameter assigned to Parameter 666 [DPI Data Out D1] MSW
N20:18	Value of parameter assigned to Parameter 667 [DPI Data Out D2] LSW
N20:19	Value of parameter assigned to Parameter 667 [DPI Data Out D2] MSW
N20:20	Logic Command (see Appendix D)
N20:21	Speed Reference LSW
N20:22	Speed Reference MSW
N20:23	Value of parameter assigned to Parameter 651 [DPI Data In A1] LSW
N20:24	Value of parameter assigned to Parameter 651 [DPI Data In A1] MSW
N20:25	Value of parameter assigned to Parameter 652 [DPI Data In A2] LSW
N20:26	Value of parameter assigned to Parameter 652 [DPI Data In A2] MSW
N20:27	Value of parameter assigned to Parameter 653 [DPI Data In B1] LSW
N20:28	Value of parameter assigned to Parameter 653 [DPI Data In B1] MSW
N20:29	Value of parameter assigned to Parameter 654 [DPI Data In B2] LSW
N20:30	Value of parameter assigned to Parameter 654 [DPI Data In B2] MSW
N20:31	Value of parameter assigned to Parameter 655 [DPI Data In C1] LSW
N20:32	Value of parameter assigned to Parameter 655 [DPI Data In C1] MSW
N20:33	Value of parameter assigned to Parameter 656 [DPI Data In C2] LSW
N20:34	Value of parameter assigned to Parameter 656 [DPI Data In C2] MSW
N20:35	Value of parameter assigned to Parameter 657 [DPI Data In D1] LSW
N20:36	Value of parameter assigned to Parameter 657 [DPI Data In D1] MSW
N20:37	Value of parameter assigned to Parameter 658 [DPI Data In D2] LSW
N20:38	Value of parameter assigned to Parameter 658 [DPI Data In D2] MSW

You can use the controller data table addresses to directly control and monitor the drive without creating any ladder logic program. However, if you intend to use Human Machine Interface devices (PanelView, and so forth) to operate the drive and view its status, you will need to create descriptive controller data table addresses (Table 15 and Table 16) and a ladder logic program that will pass that data to the data table addresses used for messaging.

Table 15 - Controller and Program Data Table Address Descriptions for Example Logic Status/Feedback Ladder Logic Program

Description	Controller Data Table Address
Drive Ready	N20:1/0
Drive Active	N20:1/1
Actual Direction (XIO)	N20:1/3
Actual Direction (XIC)	N20:1/3
Drive Faulted	N20:1/7
Drive At Speed	N20:1/8
Speed Feedback	N20:3

Description	Program Data Table Address
Status Ready	B3:1/0
Status Active	B3:1/1
Status Forward	B3:1/3
Status Reverse	B3:1/4
Status Faulted	B3:1/7
Status At Speed	B3:1/8
Speed Feedback	B30:3

Table 16 - Program and Controller Data Table Address Descriptions for Example Logic Command/Reference Ladder Logic Program

Description	Program Data Table Address
Command Stop	B3:20/0
Command Start	B3:20/1
Command Jog	B3:20/2
Command Clear Faults	B3:20/3
Command Forward Reverse (XIO)	B3:20/4
Command Forward Reverse (XIC)	B3:20/4
Speed Reference	N30:22

Description	Controller Data Table Address
Drive Stop	N20:20/0
Drive Start	N20:20/1
Drive Jog	N20:20/2
Drive Clear Faults	N20:20/3
Drive Forward	N20:20/4
Drive Reverse	N20:20/5
Speed Reference	N20:22

An example ladder logic program that uses these descriptive controller data table addresses and passes their data to the descriptive program data table addresses is shown in Figure 30, Figure 31, Figure 32, and Figure 33.

Figure 30 - MicroLogix 1100/1400 Example Ladder Logic Program for Logic Status

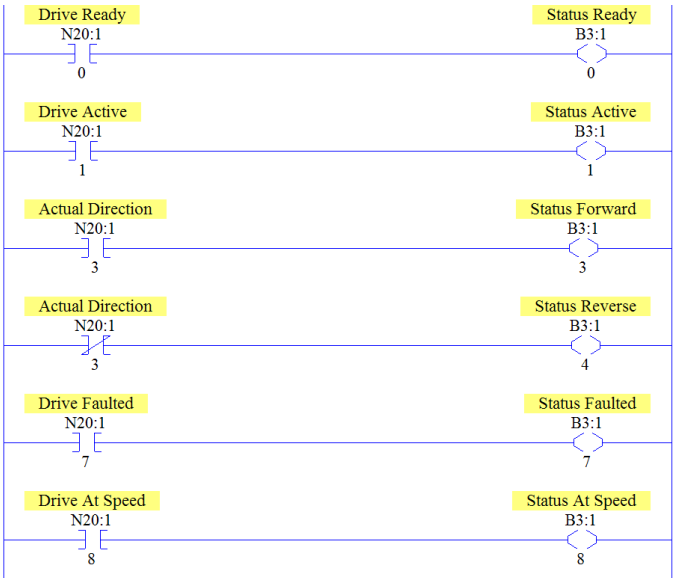

PowerFlex 70 Drives

Figure 31 - MicroLogix 1100/1400 Example Ladder Logic Program for Speed Feedback

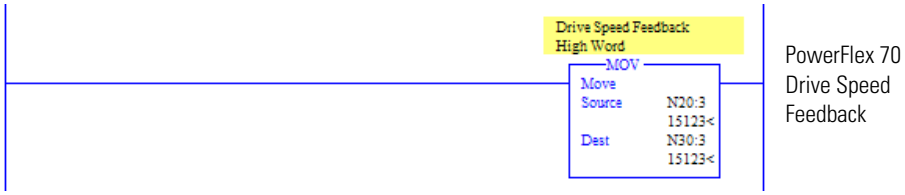

Figure 32 - MicroLogix 1100/1400 Example Ladder Logic Program for Logic Command

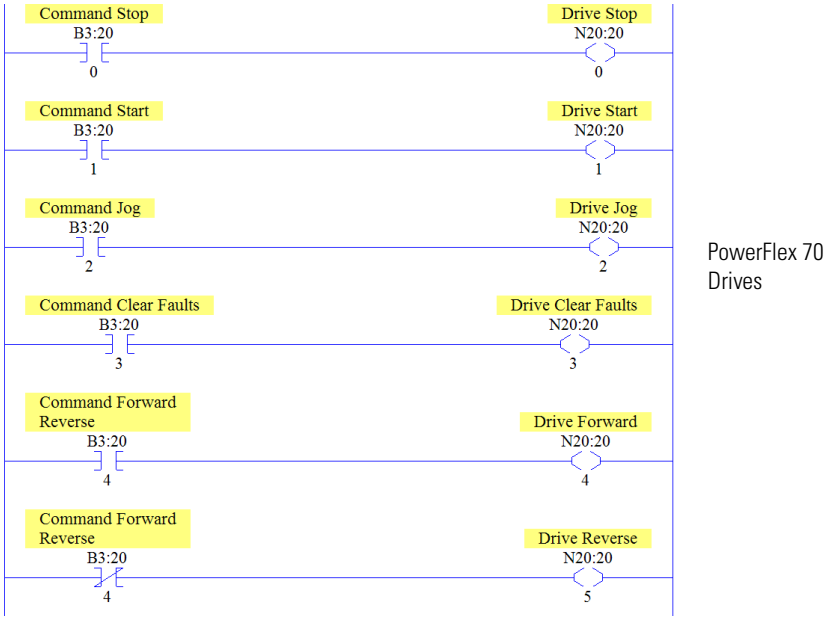

Figure 33 - MicroLogix 1100/1400 Example Ladder Logic Program for Speed Reference

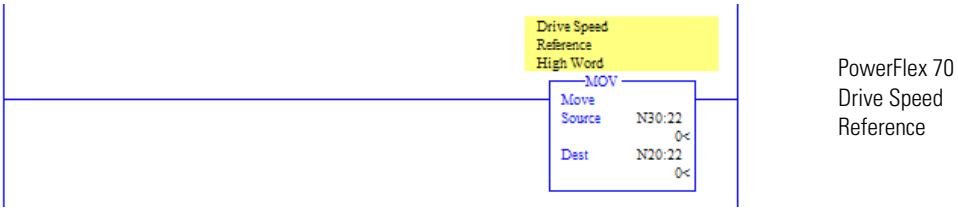

Using Explicit Messaging

This chapter provides information and examples that explain how to use Explicit Messaging to configure and monitor the adapter and connected PowerFlex 7-Class drive or SMC.

Topic	Page
About Explicit Messaging	106
Performing Explicit Messages	106
ControlLogix Controller Examples	108
MicroLogix 1100/1400 Controller Examples	124

ATTENTION: Risk of injury or equipment damage exists. The examples in this publication are intended solely for purposes of example. There are many variables and requirements with any application. Rockwell Automation, Inc. does not assume responsibility or liability (to include intellectual property liability) for actual use of the examples shown in this publication.

ATTENTION: Risk of equipment damage exists. If Explicit Messages are programmed to write parameter data to Nonvolatile Storage (NVS) frequently, the NVS will quickly exceed its life cycle and cause the drive to malfunction. Do not create a program that frequently uses Explicit Messages to write parameter data to NVS. Datalinks do not write to NVS and should be used for frequently changed parameters.

See Chapter 5 for information about the I/O Image, using Logic Command/Status, Reference/Feedback, and Datalinks.

About Explicit Messaging

Explicit Messaging is used to transfer data that does not require continuous updates. With Explicit Messaging, you can configure and monitor a slave device's parameters on the network.

Important: When an explicit message is performed, by default no connection is made since it is an 'unconnected' message. When timing of the message transaction is important, you can create a dedicated message connection between the controller and drive by checking the 'Connected' box on the Communications tab message configuration screen during message setup. These message connections are in addition to the I/O connection. However, the trade off for more message connections is decreased network performance. If your application cannot tolerate this, do not check the 'Connected' box, which is recommended.

Important: PowerFlex 7-Class drives have explicit messaging limitations. Table 17 shows the EtherNet/IP Object Class code compatibilities for these drives.

Table 17 - Explicit Messaging Class Code Compatibility with Drives

EtherNet/IP Object Class Code	PowerFlex 7-Class Drives	Explicit Messaging Function
Parameter Object 0x0F	Yes	Single parameter reads/writes
DPI Parameter Object 0x93	Yes	Single and scattered parameter reads/writes

Performing Explicit Messages

There are five basic events in the Explicit Messaging process. The details of each step will vary depending on the type of controller being used. See the documentation for your controller.

Important: There must be a request message and a response message for all Explicit Messages, whether you are reading or writing data.

Figure 34 - Explicit Message Process

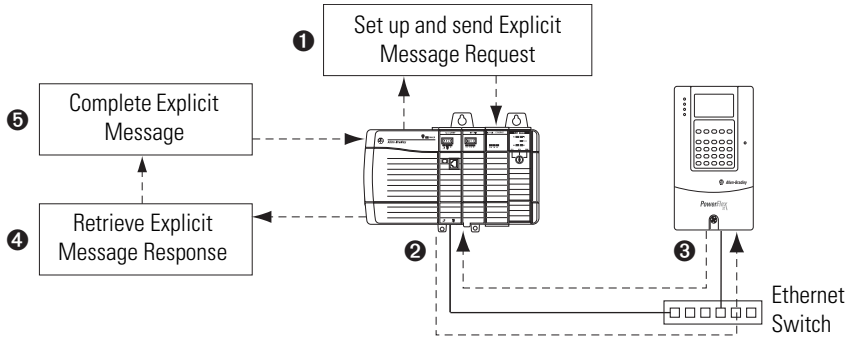

Event	Description
❶	You format the required data and set up the ladder logic program to send an Explicit Message request to the scanner or bridge module (download).
❷	The scanner or bridge module transmits the Explicit Message Request to the slave device over the network.
❸	The slave device transmits the Explicit Message Response back to the scanner. The data is stored in the scanner buffer.
❹	The controller retrieves the Explicit Message Response from the scanner's buffer (upload).
❺	The Explicit Message is complete.

For information on the maximum number of Explicit Messages that can be executed at a time, see the documentation for the scanner or bridge and/or controller that is being used.

ControlLogix Controller Examples

TIP To display the Message Configuration screen in RSLogix 5000 software, add a message instruction (MSG), create a new tag for the message (Properties: Base tag type, MESSAGE data type, controller scope), and click the ... button in the message instruction.

For supported classes, instances, and attributes, see Appendix C, EtherNet/IP Objects.

Explicit Messaging Using RSLogix 5000 Software, Version 15.00 or Later

ControlLogix Controller Example Ladder Logic Program to Read a Single Parameter

A Parameter Read message is used to read a single parameter. This read message example reads the value of parameter 003 - [Output Current] in a PowerFlex 7-Class drive.

Table 18 - Example Controller Tags to Read a Single Parameter

Operand	Controller Tags for Single Read Message	Data Type
XIC	Execute_Single_Read_Message	BOOL
MSG	Single_Read_Message	MESSAGE

Figure 35 - Example Ladder Logic to Read a Single Parameter

ControlLogix Controller – Formatting a Message to Read a Single Parameter, RSLogix 5000 Software, Version 15.00 or Later

Figure 36 - Parameter Read Single Message Configuration Screens

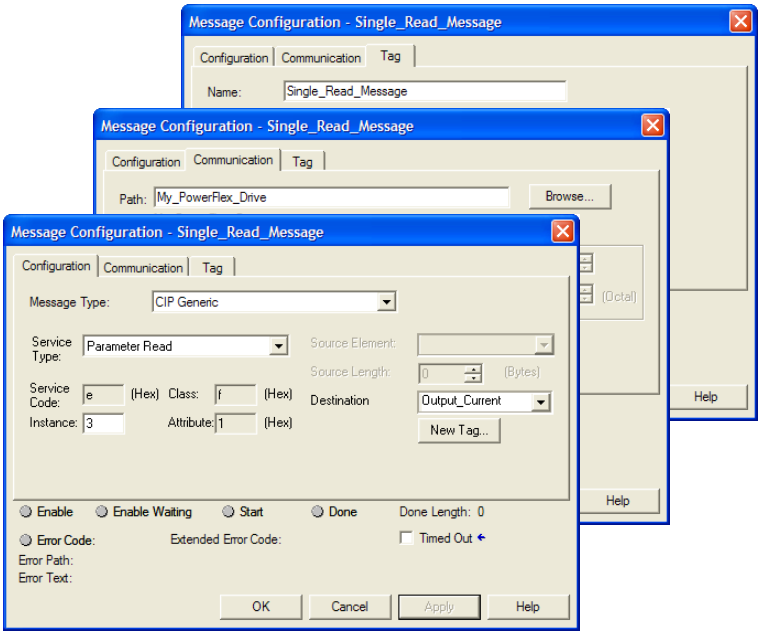

The following table identifies the data that is required in each box to configure a message to read a single parameter.

Configuration Tab	Example Value	Description
Message Type	CIP Generic	Used to access the Parameter Object in the adapter.
Service Type (1)	Parameter Read	This service is used to read a parameter value.
Service Code (1)	e (Hex.)	Code for the requested service.
Class	f (Hex.)	Class ID for the DPI Parameter Object.
Instance (2)	3 (Dec.)	Instance number is the same as parameter number.
Attribute	1 (Hex.)	Attribute number for the Parameter Value attribute.
Destination	Output_Current (4)	The tag where the data that is read is stored.
Communication Tab	**Example Value**	**Description**
Path (3)	My_PowerFlex_Drive	The path is the route that the message will follow.
Tag Tab	**Example Value**	**Description**
Name	Single_Read_Message	The name for the message.

(1) The default setting for Service Type is 'Custom', enabling entry of a Service Code not available from the Service Type pull-down menu. When choosing a Service Type other than 'Custom' from the pull-down menu, an appropriate Hex. value is automatically assigned to the Service Code box which is dimmed (unavailable).

(2) Only drive parameters (Port 0) can be read using Parameter Object Class code 0x0F. To read a parameter of a peripheral in another port, use DPI Parameter Object Class code 0x93 (see page 121).

(3) Click **Browse** to find the path, or type in the name of the device listed in the I/O Configuration folder.

(4) In this example, Output Current is a 32-bit parameter requiring the Data Type field to be set to 'DINT' when creating the controller tag. If the parameter being read is a 16-bit parameter, the tag Data Type field must be set to 'INT'. When using a PowerFlex 700S drive, Output Current is a floating point parameter requiring the Data Type field to be set to 'REAL' when creating the controller tag. See the drive documentation to determine the size of the parameter and its data type (16-bit or 32-bit integer or REAL).

ControlLogix Controller Example Ladder Logic Program to Write a Single Parameter, RSLogix 5000 Software, Version 15.00 or Later

A Parameter Write message is used to write to a single parameter. This write message example writes a value to parameter 140 - [Accel Time 1] in a PowerFlex 7-Class drive.

Table 19 - Example Controller Tags to Write a Single Parameter

Operand	Controller Tags for Single Write Message	Data Type
XIC	Execute_Single_Write_Message	BOOL
MSG	Single_Write_Message	MESSAGE

Figure 37 - Example Ladder Logic to Write a Single Parameter

Important: If the explicit message single write must be written continuously, use DPI Parameter Object Class code 0x93. This writes to RAM—not NVS (EEPROM) memory. This example single write message using Class code F writes to NVS. Over time, continuous writes will exceed the EEPROM life cycle and cause the drive to malfunction.

ControlLogix Controller – Formatting a Message to Write a Single Parameter, RSLogix 5000 Software, Version 15.00 or Later

Figure 38 - Parameter Write Single Message Configuration Screens

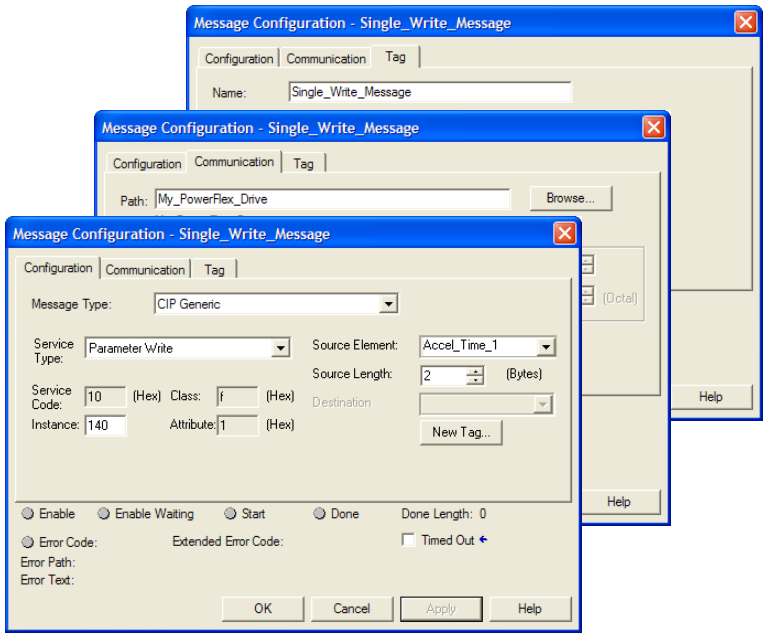

The following table identifies the data that is required in each box to configure a message to write a single parameter.

Configuration Tab	Example Value	Description
Message Type	CIP Generic	Used to access the Parameter Object in the adapter.
Service Type (1)	Parameter Write	This service is used to write a parameter value.
Service Code (1)	10 (Hex.)	Code for the requested service.
Class	f (Hex.)	Class ID for the DPI Parameter Object.
Instance (2)	140 (Dec.)	Instance number is the same as parameter number.
Attribute	1 (Hex.)	Attribute number for the Parameter Value attribute.
Source Element	Accel_Time_1 (4)	Name of the tag for any service data to be sent from the scanner or bridge to the adapter/drive.
Source Length	2 (4)	Number of bytes of service data to be sent in the message.
Communication Tab	**Example Value**	**Description**
Path (3)	My_PowerFlex_Drive	The path is the route that the message will follow.
Tag Tab	**Example Value**	**Description**
Name	Single_Write_Message	The name for the message.

(1) The default setting for Service Type is 'Custom', enabling entry of a Service Code not available from the Service Type pull-down menu. When choosing a Service Type other than 'Custom' from the pull-down menu, an appropriate Hex. value is automatically assigned to the Service Code box which is dimmed (unavailable).

(2) Only drive parameters (Port 0) can be written to using Parameter Object Class code 0x0F. To write to a parameter of a peripheral in another port, use DPI Parameter Object Class code 0x93 (see page 123).

(3) Click **Browse** to find the path, or type in the name of the device listed in the I/O Configuration folder.

(4) In this example, Accel Time 1 is a 16-bit parameter requiring the tag Data Type field to be set to 'INT' when creating the controller tag. If the parameter being written to is a 32-bit parameter, the tag Data Type field must be set to 'DINT'. Also, the Source Length field on the Message Configuration screen must correspond to the selected Data Type in bytes (for example, 4 bytes for a DINT or a REAL). When using a PowerFlex 700S drive, Accel Time 1 is a floating point number requiring the Data Type field to be set to 'REAL' when creating the controller tag. See the drive documentation to determine the size of the parameter and its data type (16-bit or 32-bit integer or REAL).

ControlLogix Controller Example Ladder Logic Program to Read Multiple Parameters, RSLogix 5000 Software, All Versions

A Scattered Read message is used to read the values of multiple parameters. Up to 22 parameters can be read. This read message example reads the values of these five parameters.

PowerFlex 7-Class Drive
• Parameter 001 - [Output Freq] • Parameter 003 - [Output Current] • Parameter 006 - [Output Voltage] • Parameter 012 - [DC Bus Voltage] • Parameter 017 - [Analog In1 Value]

See DPI Parameter Object on page 198 (Class code 0x93) for parameter numbering.

Important: See Table 17 on page 106 for limitations of PowerFlex 7-Class drives when using Class code 0x93.

Table 20 - Example Controller Tags to Read Multiple Parameters

Operand	Controller Tags for Read Multiple Message	Data Type
XIC	Execute_Scattered_Read_Message	BOOL
MSG	Scattered_Read_Message	MESSAGE

Figure 39 - Example Ladder Logic to Read Multiple Parameters

ControlLogix Controller – Formatting a Message to Read Multiple Parameters, RSLogix 5000 Software, All Versions

Figure 40 - Scattered Read Message Configuration Screens

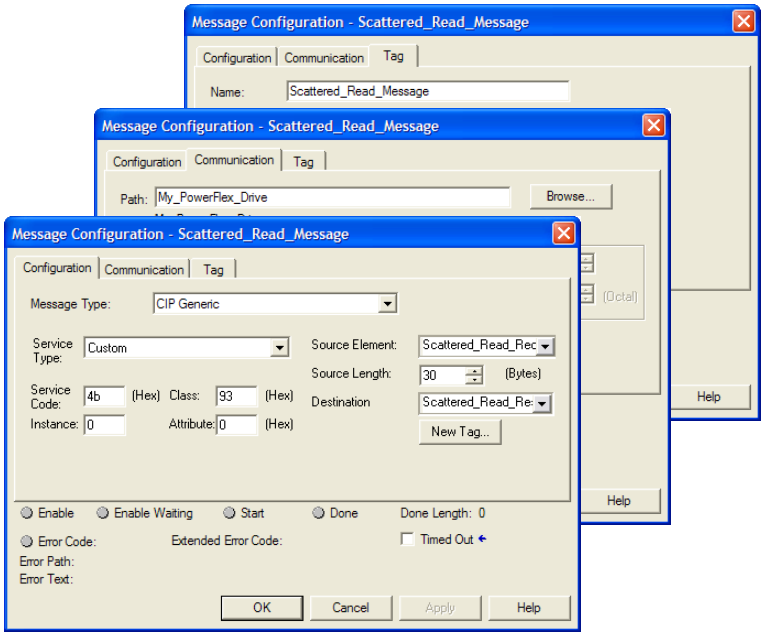

The following table identifies the data that is required in each box to configure a message to read multiple parameters.

Configuration Tab	Example Value	Description
Message Type	CIP Generic	Used to access Parameter Object in the adapter.
Service Type (1)	Custom	Required for scattered messages.
Service Code (1)	4b (Hex.)	Code for the requested service.
Class	93 or 9F (Hex.) (3)	Class ID for the DPI Parameter Object.
Instance	0 (Dec.)	Required for scattered messages.
Attribute	0 (Hex.)	Required for scattered messages.
Source Element	Scattered_Read_Request (4)	Name of the tag for any service data to be sent from scanner or bridge to the adapter/drive.
Source Length	30 (4)	Number of bytes of service data to be sent in the message.
Destination	Scattered_Read_Response	The tag where the data that is read is stored.
Communication Tab	**Example Value**	**Description**
Path (2)	My_PowerFlex_Drive	The path is the route that the message will follow.
Tag Tab	**Example Value**	**Description**
Name	Scattered_Read_Message	The name for the message.

(1) The default setting for Service Type is 'Custom', enabling entry of a Service Code not available from the Service Type pull-down menu. When choosing a Service Type other than 'Custom' from the pull-down menu, an appropriate Hex. value is automatically assigned to the Service Code box which is dimmed (unavailable).

(2) Click **Browse** to find the path, or type in the name of the device listed in the I/O Configuration folder.

(3) See Table 17 on page 106 for limitations of PowerFlex 7-Class drives when using DPI Parameter Object Class code 0x93 for explicit messaging.

(4) In this example, we are reading five parameters. Each parameter being read requires an array of three INT registers. Therefore, a controller tag was created with its Data Type field set to 'INT[15]'. Also, the Source Length field on the Message Configuration screen must correspond to the selected Data Type in bytes (for this example, 30 bytes for an INT[15] array). Scattered read messages always assume that every parameter being read is a 32-bit parameter, regardless of its actual size. Maximum length is 132 bytes or 66 words which equates to 22 parameters. For parameter numbering, see DPI Parameter Object on page 198 (Class code 0x93).

ControlLogix Controller Example Scattered Read Request Data

In this message example, we use the data structure in Figure 41 or Figure in the source tag named Scattered_Read_Request to read these five parameters.

PowerFlex 7-Class Drive
• Parameter 001 - [Output Freq] • Parameter 003 - [Output Current] • Parameter 006 - [Output Voltage] • Parameter 012 - [DC Bus Voltage] • Parameter 017 - [Analog In1 Value]

See DPI Parameter Object on page 198 (Class code 0x93) for parameter numbering.

Figure 41 - Example Scattered Read Request Data for PowerFlex 7-Class Drive

Name	Value	Data Type	Description
Scattered_Read_Request	{...}	INT[15]	
Scattered_Read_Request[0]	1	INT	Parameter Number (decimal)
Scattered_Read_Request[1]	0	INT	Pad Word
Scattered_Read_Request[2]	0	INT	Pad Word
Scattered_Read_Request[3]	3	INT	Parameter Number (decimal)
Scattered_Read_Request[4]	0	INT	Pad Word
Scattered_Read_Request[5]	0	INT	Pad Word
Scattered_Read_Request[6]	6	INT	Parameter Number (decimal)
Scattered_Read_Request[7]	0	INT	Pad Word
Scattered_Read_Request[8]	0	INT	Pad Word
Scattered_Read_Request[9]	12	INT	Parameter Number (decimal)
Scattered_Read_Request[10]	0	INT	Pad Word
Scattered_Read_Request[11]	0	INT	Pad Word
Scattered_Read_Request[12]	17	INT	Parameter Number (decimal)
Scattered_Read_Request[13]	0	INT	Pad Word
Scattered_Read_Request[14]	0	INT	Pad Word

ControlLogix Controller Example Scattered Read Response Data

The Scattered Read Request message reads the multiple parameters and returns their values to the destination tag (Scattered_Read_Response). Figure 42 or Figure shows the parameter values.

Figure 42 - Example Scattered Read Response Data for PowerFlex 7-Class Drive

Name	Value	Data Type	Description
Scattered_Read_Response	{...}	INT[15]	
Scattered_Read_Response[0]	1	INT	Parameter Number (decimal)
Scattered_Read_Response[1]	325	INT	Parameter Value LSW
Scattered_Read_Response[2]	0	INT	Parameter Value MSW
Scattered_Read_Response[3]	3	INT	Parameter Number (decimal)
Scattered_Read_Response[4]	1	INT	Parameter Value LSW
Scattered_Read_Response[5]	0	INT	Parameter Value MSW
Scattered_Read_Response[6]	6	INT	Parameter Number (decimal)
Scattered_Read_Response[7]	1187	INT	Parameter Value LSW
Scattered_Read_Response[8]	0	INT	Parameter Value MSW
Scattered_Read_Response[9]	12	INT	Parameter Number (decimal)
Scattered_Read_Response[10]	3292	INT	Parameter Value LSW
Scattered_Read_Response[11]	0	INT	Parameter Value MSW
Scattered_Read_Response[12]	17	INT	Parameter Number (decimal)
Scattered_Read_Response[13]	8318	INT	Parameter Value LSW
Scattered_Read_Response[14]	0	INT	Parameter Value MSW

In this message example, the parameters have the following values.

PowerFlex 7-Class Drive Parameter	Read Value
1 - [Output Freq]	32.5 Hz
3 - [Output Current]	0.01 Amp
6 - [Output Voltage]	118.7 VAC
12 - [DC Bus Voltage]	329.2 VDC
17 - [Analog In2 Value]	8.318 mA

ControlLogix Controller Example Ladder Logic Program to Write Multiple Parameters, RSLogix 5000 Software, All Versions

A Scattered Write message is used to write to multiple parameters. This write message example writes the following values to these five parameters.

PowerFlex 7-Class Drive Parameter	Write Value
141 - [Accel Time 2]	11.1 Sec.
143 - [Decel Time 2]	22.2 Sec.
105 - [Preset Speed 5]	33.3 Hz.
106 - [Preset Speed 6]	44.4 Hz.
107 - [Preset Speed 7]	55.5 Hz.

See DPI Parameter Object on page 198 (Class code 0x93) for parameter numbering.

Important: See Table 17 on page 106 for limitations of PowerFlex 7-Class drives when using Class code 0x93 for explicit messaging.

Table 21 - Example Controller Tags to Write Multiple Parameters

Operand	Controller Tags for Write Multiple Message	Data Type
XIC	Execute_Scattered_Write_Message	BOOL
MSG	Scattered_Write_Message	MESSAGE

Figure 43 - Example Ladder Logic to Write Multiple Parameters

Important: If the explicit message scattered write must be written continuously, then use a separate explicit message single write for each parameter using DPI Parameter Object Class code 0x93 and attribute A (10 decimal; see page 123). Attribute A writes to RAM—not NVS (EEPROM) memory. This example scattered write message using attribute 0 writes to NVS. Over time, continuous writes will exceed the EEPROM life cycle and cause the drive to malfunction.

ControlLogix Controller – Formatting a Message to Write Multiple Parameters, RSLogix 5000 Software, All Versions

Figure 44 - Scattered Write Multiple Message Configuration Screens

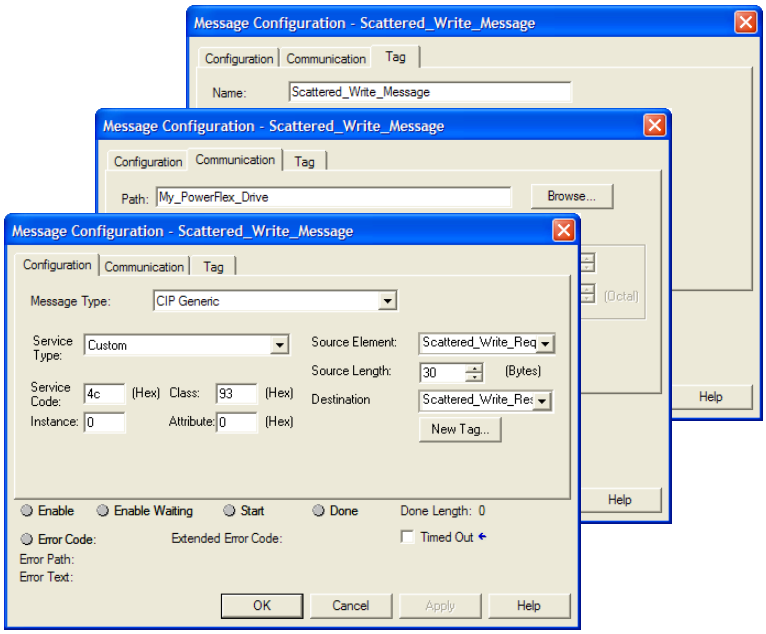

The following table identifies the data that is required in each box to configure a message to write multiple parameters.

Configuration Tab	Example Value	Description
Message Type	CIP Generic	Used to access Parameter Object in the adapter.
Service Type (1)	Custom	Required for scattered messages.
Service Code (1)	4c (Hex.)	Code for the requested service.
Class	93 or 9F (Hex.) (3)	Class ID for the DPI Parameter Object.
Instance	0 (Dec.)	Required for scattered messages.
Attribute	0 (Hex.)	Required for scattered messages.
Source Element	Scattered_Write_Request (4)	Name of the tag for any service data to be sent from scanner or bridge to the adapter/drive.
Source Length	30 (4)	Number of bytes of service data to be sent in the message.
Destination	Scattered_Write_Response	The tag where the data that is read is stored.
Communication Tab	**Example Value**	**Description**
Path (2)	My_PowerFlex_Drive	The path is the route that the message will follow.
Tag Tab	**Example Value**	**Description**
Name	Scattered_Write_Message	The name for the message.

(1) The default setting for Service Type is 'Custom', enabling entry of a Service Code not available from the Service Type pull-down menu. When choosing a Service Type other than 'Custom' from the pull-down menu, an appropriate Hex. value is automatically assigned to the Service Code box which is dimmed (unavailable).

(2) Click **Browse** to find the path, or type in the name of the device listed in the I/O Configuration folder.

(3) See Table 17 on page 106 for limitations of PowerFlex 7-Class drives when using DPI Parameter Object Class code 0x93 for explicit messaging.

(4) In this example, we are writing to five parameters. Each parameter being written to requires an array of three INT registers. Therefore, a controller tag was created with its Data Type field set to 'INT[15]'. Also, the Source Length field on the Message Configuration screen must correspond to the selected Data Type in bytes (for this example, 30 bytes for an INT[15] array). Scattered write messages always assume that every parameter being written to is a 32-bit parameter, regardless of its actual size. Maximum length is 132 bytes or 66 words which equates to 22 parameters. For parameter numbering, see DPI Parameter Object on page 198 (Class code 0x93).

ControlLogix Controller Example Scattered Write Request Data

In this message example, we use the data structure in Figure 45 or Figure in the source tag (Scattered_Write_Request) to write new values to these parameters.

PowerFlex 7-Class Drive Parameter	Write Value
141 - [Accel Time 2]	11.1 Sec.
143 - [Decel Time 2]	22.2 Sec.
105 - [Preset Speed 5]	33.3 Hz.
106 - [Preset Speed 6]	44.4 Hz.
107 - [Preset Speed 7]	55.5 Hz.

See DPI Parameter Object on page 198 (Class code 0x93) for parameter numbering.

Figure 45 shows the parameter values.

Figure 45 - Example Scattered Write Request Data for PowerFlex 7-Class Drive

Name	Value	Data Type	Description
Scattered_Write_Request	{...}	INT[15]	
Scattered_Write_Request[0]	141	INT	Parameter Number (decimal)
Scattered_Write_Request[1]	111	INT	Parameter Value LSW
Scattered_Write_Request[2]	0	INT	Parameter Value MSW
Scattered_Write_Request[3]	143	INT	Parameter Number (decimal)
Scattered_Write_Request[4]	222	INT	Parameter Value LSW
Scattered_Write_Request[5]	0	INT	Parameter Value MSW
Scattered_Write_Request[6]	105	INT	Parameter Number (decimal)
Scattered_Write_Request[7]	333	INT	Parameter Value LSW
Scattered_Write_Request[8]	0	INT	Parameter Value MSW
Scattered_Write_Request[9]	106	INT	Parameter Number (decimal)
Scattered_Write_Request[10]	444	INT	Parameter Value LSW
Scattered_Write_Request[11]	0	INT	Parameter Value MSW
Scattered_Write_Request[12]	107	INT	Parameter Number (decimal)
Scattered_Write_Request[13]	555	INT	Parameter Value LSW
Scattered_Write_Request[14]	0	INT	Parameter Value MSW

ControlLogix Controller Example Scattered Write Response Data

The results of the message appear in the destination tag named Scattered_Write_Response (Figure 46). Values of '0' indicate no errors occurred.

Figure 46 - Example Scattered Write Response Data for PowerFlex 7-Class Drive

Name	Value	Data Type	Description
Scattered_Write_Response	{...}	INT[15]	
Scattered_Write_Response[0]	141	INT	Parameter Number (decimal)
Scattered_Write_Response[1]	0	INT	Pad Word or Error Code
Scattered_Write_Response[2]	0	INT	Pad Word
Scattered_Write_Response[3]	143	INT	Parameter Number (decimal)
Scattered_Write_Response[4]	0	INT	Pad Word or Error Code
Scattered_Write_Response[5]	0	INT	Pad Word
Scattered_Write_Response[6]	105	INT	Parameter Number (decimal)
Scattered_Write_Response[7]	0	INT	Pad Word or Error Code
Scattered_Write_Response[8]	0	INT	Pad Word
Scattered_Write_Response[9]	106	INT	Parameter Number (decimal)
Scattered_Write_Response[10]	0	INT	Pad Word or Error Code
Scattered_Write_Response[11]	0	INT	Pad Word
Scattered_Write_Response[12]	107	INT	Parameter Number (decimal)
Scattered_Write_Response[13]	0	INT	Pad Word or Error Code
Scattered_Write_Response[14]	0	INT	Pad Word

ControlLogix Controller – Explanation of Request and Response Data for Read/Write Multiple Messaging, RSLogix 5000 Software, All Versions

The data structures in Figure 47 and Figure 48 use 16-bit words and can accommodate up to 22 parameters in a single message. In the Response Message, a parameter number with the high bit set indicates that the associated parameter value field contains an error code (parameter number in response data will be negative).

Important: See Table 17 on page 106 for limitations of PowerFlex 7-Class drives when using Class code 0x93 for explicit messaging.

Figure 47 - Data Structures for Scattered Read Messages

	Request (Source Data)		Response (Destination Data)
Word 0	Parameter Number	Word 0	Parameter Number
1	Pad Word	1	Parameter Value LSW
2	Pad Word	2	Parameter Value MSW
3	Parameter Number	3	Parameter Number
4	Pad Word	4	Parameter Value LSW
5	Pad Word	5	Parameter Value MSW
6	Parameter Number	6	Parameter Number
7	Pad Word	7	Parameter Value LSW
8	Pad Word	8	Parameter Value MSW
9	Parameter Number	9	Parameter Number
10	Pad Word	10	Parameter Value LSW
11	Pad Word	11	Parameter Value MSW
12	Parameter Number	12	Parameter Number
13	Pad Word	13	Parameter Value LSW
14	Pad Word	14	Parameter Value MSW
⋮		⋮	
63	Parameter Number	63	Parameter Number
64	Pad Word	64	Parameter Value LSW
65	Pad Word	65	Parameter Value MSW

Figure 48 - Data Structures for Scattered Write Messages

	Request (Source Data)		Response (Destination Data)
Word 0	Parameter Number	Word 0	Parameter Number
1	Parameter Value LSW	1	Pad Word
2	Parameter Value MSW	2	Pad Word
3	Parameter Number	3	Parameter Number
4	Parameter Value LSW	4	Pad Word
5	Parameter Value MSW	5	Pad Word
6	Parameter Number	6	Parameter Number
7	Parameter Value LSW	7	Pad Word
8	Parameter Value MSW	8	Pad Word
9	Parameter Number	9	Parameter Number
10	Parameter Value LSW	10	Pad Word
11	Parameter Value MSW	11	Pad Word
12	Parameter Number	12	Parameter Number
13	Parameter Value LSW	13	Pad Word
14	Parameter Value MSW	14	Pad Word
⋮		⋮	
63	Parameter Number	63	Parameter Number
64	Parameter Value LSW	64	Pad Word
65	Parameter Value MSW	65	Pad Word

Explicit Messaging Using RSLogix 5000 Software, All Versions

ControlLogix Controller Example Ladder Logic Program to Read a Single Parameter

A Get Attribute Single message is used to read a single parameter. This read message example reads the value of parameter 003 - [Output Current] in a PowerFlex 7-Class drive.

Important: See Table 17 on page 106 for limitations of PowerFlex 7-Class drives when using DPI Parameter Object Class code 0x93 for explicit messaging.

Table 22 - Example Controller Tags to Read a Single Parameter

Operand	Controller Tags for Single Read Message	Data Type
XIC	Execute_Single_Read_Message	BOOL
MSG	Single_Read_Message	MESSAGE

Figure 49 - Example Ladder Logic to Read a Single Parameter

ControlLogix Controller – Formatting a Message to Read a Single Parameter, RSLogix 5000 Software, All Versions

Figure 50 - Get Attribute Single Message Configuration Screens

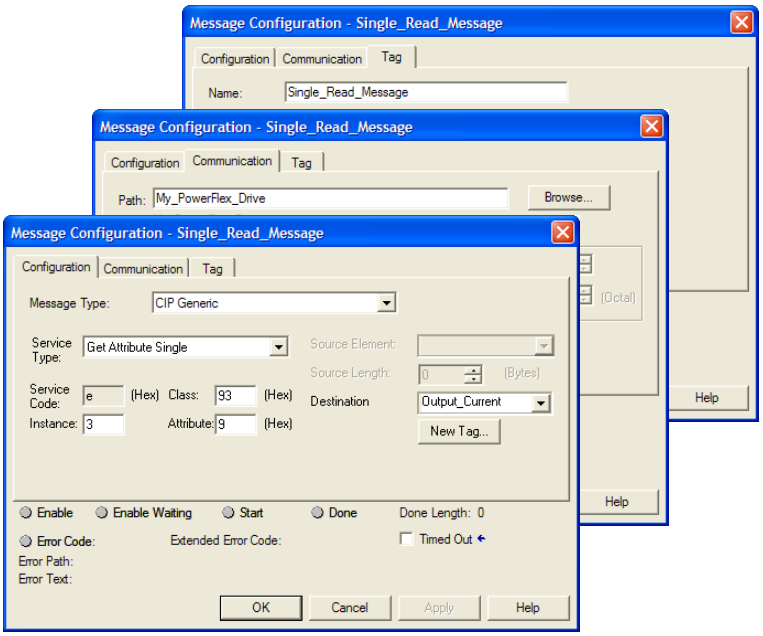

The following table identifies the data that is required in each box to configure a message to read a single parameter.

Configuration Tab	Example Value	Description
Message Type	CIP Generic	Used to access the Parameter Object in the adapter.
Service Type (1)	Get Attribute Single	This service is used to read a parameter value.
Service Code (1)	e (Hex.)	Code for the requested service.
Class	93 or 9F (Hex.) (4)	Class ID for the DPI Parameter Object.
Instance (2)	3 (Dec.)	Instance number is the same as parameter number.
Attribute	9 (Hex.)	Attribute number for the Parameter Value attribute.
Destination	Output_Current (5)	The tag where the data that is read is stored.
Communication Tab	**Example Value**	**Description**
Path (3)	My_PowerFlex_Drive	The path is the route that the message will follow.
Tag Tab	**Example Value**	**Description**
Name	Single_Read_Message	The name for the message.

(1) The default setting for Service Type is 'Custom', enabling entry of a Service Code not available from the Service Type pull-down menu. When choosing a Service Type other than 'Custom' from the pull-down menu, an appropriate Hex. value is automatically assigned to the Service Code box which is dimmed (unavailable).

(2) The instance is the parameter number in the drive (Port 0). For example, to read parameter 4 of a peripheral in Port 5 of an SMC-50 controller, the instance would be 21504 + 4 = 21508. See DPI Parameter Object on page 198 (Class code 0x93) to determine the instance number.

(3) Click **Browse** to find the path, or type in the name of the device listed in the I/O Configuration folder.

(4) See Table 17 on page 106 for limitations of PowerFlex 7-Class drives when using DPI Parameter Object Class code 0x93 for explicit messaging.

(5) In this example, Output Current is a 32-bit parameter requiring the Data Type field to be set to 'DINT' when creating the controller tag. If the parameter being read is a 16-bit parameter, the tag Data Type field must be set to 'INT'. When using a PowerFlex 700S drive, Output Current is a floating point number requiring the Data Type field to be set to 'REAL' when the creating controller tag. See the drive documentation to determine the size of the parameter and its data type (16-bit or 32-bit integer or REAL).

ControlLogix Controller Example Ladder Logic Program to Write a Single Parameter, RSLogix 5000 Software, All Versions

A Set Attribute Single message is used to write to a single parameter. This write message example writes a value to parameter 140 - [Accel Time 1] in a PowerFlex 7-Class drive.

Table 23 - Example Controller Tags to Write a Single Parameter

Operand	Controller Tags for Single Write Message	Data Type
XIC	Execute_Single_Write_Message	BOOL
MSG	Single_Write_Message	MESSAGE

Figure 51 - Example Ladder Logic to Write a Single Parameter

ControlLogix Controller – Formatting a Message to Write a Single Parameter, RSLogix 5000 Software, All Versions

Figure 52 - Set Attribute Single Message Configuration Screens

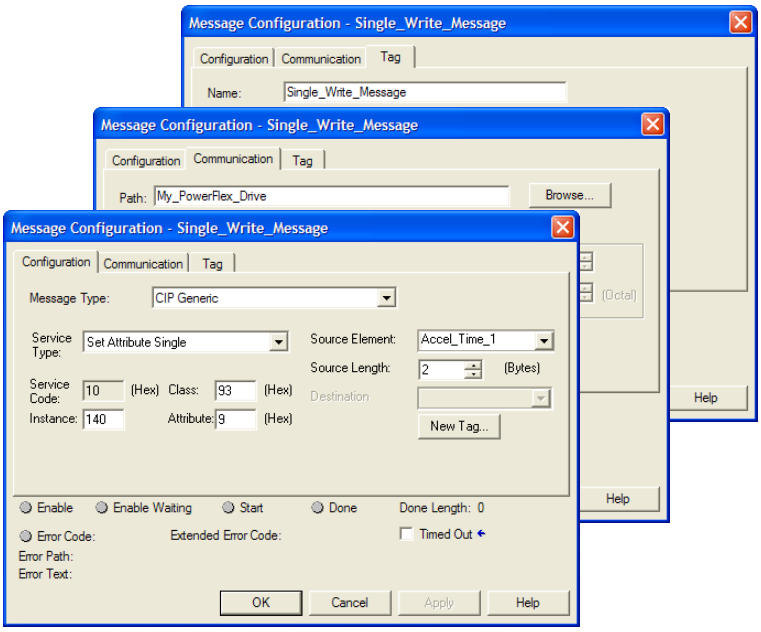

The following table identifies the data that is required in each box to configure a message to write a single parameter.

Configuration Tab	Example Value	Description
Message Type	CIP Generic	Used to access the Parameter Object in the adapter.
Service Type (1)	Set Attribute Single	This service is used to write a parameter value.
Service Code (1)	10 (Hex.)	Code for the requested service.
Class	93 or 9F (Hex.) (5)	Class ID for the DPI Parameter Object.
Instance (2)	140 (Dec.)	Instance number is the same as parameter number.
Attribute (3)	9 or A (Hex.)	Attribute number for the Parameter Value attribute.
Source Element	Accel_Time_1 (6)	Name of the tag for any service data to be sent from the scanner or bridge to the adapter/drive.
Source Length	2 (6)	Number of bytes of service data to be sent in the message.
Communication Tab	**Example Value**	**Description**
Path (4)	My_PowerFlex_Drive	The path is the route that the message will follow.
Tag Tab	**Example Value**	**Description**
Name	Single_Write_Message	The name for the message.

(1) The default setting for Service Type is 'Custom', enabling entry of a Service Code not available from the Service Type pull-down menu. When choosing a Service Type other than 'Custom' from the pull-down menu, an appropriate Hex. value is automatically assigned to the Service Code box which is dimmed (unavailable).

(2) The instance is the parameter number in the drive (Port 0). For example, to write to parameter 4 of a peripheral in Port 7 of an SMC-50 controller, the instance would be 21504 + 4 = 21508. See DPI Parameter Object on page 198 (Class code 0x93) to determine the instance number.

(3) Setting the Attribute value to '9' will write the parameter value to the drive's Nonvolatile Storage (EEPROM) memory, which retains the parameter value even after the drive is power cycled. **Important:** When set to '9', the EEPROM may quickly exceed its life cycle and cause the drive to malfunction. Setting the Attribute value to 'A' (10 decimal) will write the parameter value to temporary memory, which deletes the parameter value after the drive is power cycled. When frequent write messages are required, we recommend using the 'A' (10 decimal) setting.

(4) Click **Browse** to find the path, or type in the name of the device listed in the I/O Configuration folder.

(5) See Table 17 on page 106 for limitations of PowerFlex 7-Class drives when using DPI Parameter Object Class code 0x93 for explicit messaging.

(6) In this example, Accel Time 1 is a 16-bit parameter requiring the tag Data Type field to be set to 'INT' when creating the controller tag. If the parameter being written to is a 32-bit parameter, the tag Data Type field must be set to 'DINT'. Also, the Source Length field on the Message Configuration screen must correspond to the selected Data Type in bytes (for example, 4 bytes for a DINT or a REAL). When using a PowerFlex 700S drive, Accel Time 1 is a floating point number requiring the Data Type field to be set to 'REAL' when creating the controller tag. See the drive documentation to determine the size of the parameter and its data type (16-bit or 32-bit integer or REAL).

ControlLogix Controller Example Ladder Logic Program to Read or Write Multiple Parameters, RSLogix 5000 Software, All Versions

Because the example ladder logic rungs, configuration screens, and request/response data to read or write multiple parameters using RSLogix 5000 software, all versions, are identical to those for RSLogix 5000 software, version 15.00 or later, see the information contained on page 112 through page 119 for complete details.

MicroLogix 1100/1400 Controller Examples

When using RSLogix 500 software, version 7.10 and earlier, explicit messaging must be performed using the PCCC N-File method. For RSLogix 500 software, version 7.20 and later, the CIP messaging method has been added along with the PCCC N-File method. However, it is recommended to use the CIP method because it is easier to use and understand. For this reason, only instructions for the CIP method are provided.

The CIP messaging method provides two ways to perform explicit messaging:

- Read/Write Parameter Service simplifies setup by requiring less data to be entered in message configuration screens. However, the Read/Write Parameter Service can only be used to perform single parameter read or single parameter write explicit messages. (Multiple parameter reads or writes must be performed using the Generic Get/Set Attribute Service described below.)

Important: When performing a Write Parameter message, the data will always be written to the drive's Nonvolatile Storage (NVS). Continuous NVS writes may damage the drive's EEPROM. If continuous writes are necessary, use the Generic Set Attribute Single Service and attribute A (10 decimal; see page 133).

- Generic Get/Set Attribute Service requires more setup data to be entered in message configuration screens, but can be used to perform single parameter read or write and multiple parameter read or write explicit messages. Also, the Generic Set Attribute Service offers the choice of writing the data to the drive's Nonvolatile Storage (NVS) or the drive's Random Access Memory (RAM; for Generic Set Attribute Single service only, see page 133). Note that when selecting the data to be written to RAM, the data will be lost if the drive loses power.

For supported classes, instances, and attributes, see Appendix C, EtherNet/IP Objects.

MicroLogix 1100/1400 Controller Explicit Messaging Using the Read/Write Parameter Service

MicroLogix 1100/1400 Controller Example Ladder Logic Program to Read a Single Parameter

A Read Parameter message is used to read a single parameter. This read message example reads the value of parameter 003 - [Output Current] in a PowerFlex 7-Class drive.

Figure 53 - Example Ladder Logic to Read a Single Parameter

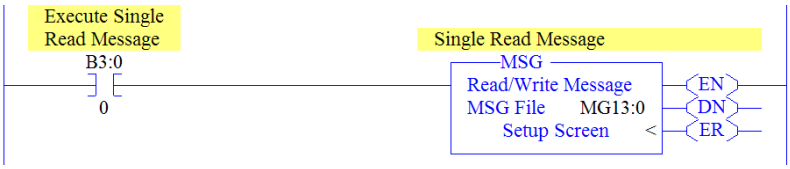

MicroLogix 1100/1400 Controller – Formatting a Message to Read a Single Parameter Using Read/Write Parameter Service

Figure 54 - Read Parameter Message Configuration Screens

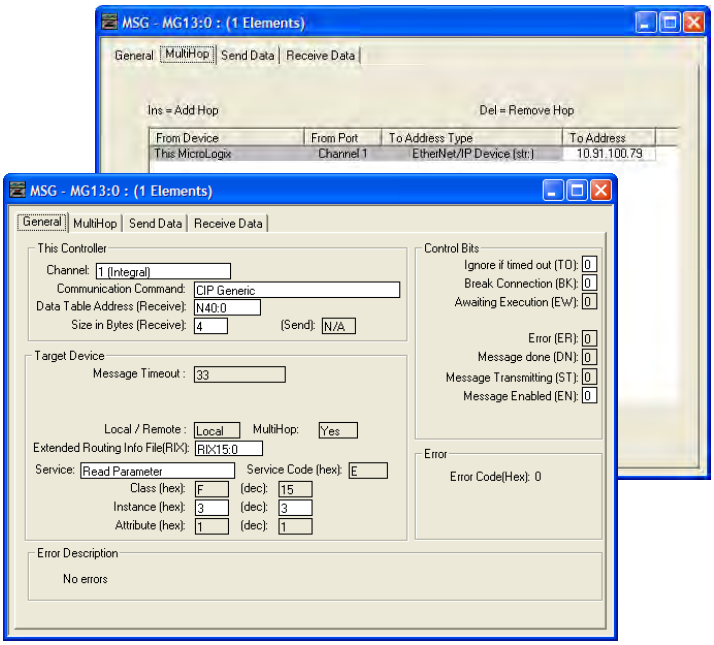

The following table identifies the data that is required in each box to configure a message to read a single parameter.

General Tab	Example Value	Description
Channel	1	Controller port to which the network is connected.
Comm… Command	CIP Generic	Used to access the Parameter Object in the adapter.
Data Table Address	N40:0	An unused controller data table address containing the message instruction. This address is the starting word of the destination file.
Size in Bytes	4 (3)	Number of bytes to be transferred. Each byte size is an 8-bit integer.
Extended Routing…	RIX15:0	An unused routing information file for the controller.
Service (1)	Read Parameter	Code for the requested service.
Instance (2)	3 (Dec.)	Instance number is the same as the parameter number.
MultiHop Tab	**Example Value**	**Description**
To Address	10.91.100.79	IP address of the adapter connected to the drive.

(1) The default setting for Service is 'Custom', enabling entry of a Service Code not available from the Service pull-down menu. When choosing a Service other than 'Custom' from the pull-down menu, an appropriate Hex. value is automatically assigned to the Service Code box which is dimmed (unavailable).

(2) Only drive parameters (Port 0) can be read using Parameter Object Class code 0x0F. To read a parameter of a peripheral in another port, use DPI Parameter Object Class code 0x93 (see page 130).

(3) In this example, Output Current is a 32-bit parameter. If the parameter being read is a 16-bit parameter, the Size in Bytes would be set to 2. When the parameter being read is a 32-bit REAL (floating point) data type, the size in bytes would be set to 4. See the drive documentation to determine the size of the parameter and its data type (16-bit or 32-bit integer or REAL).

MicroLogix 1100/1400 Controller Example Read Single Response Data

In this message example, we use the data table address in Figure 55 to store the response value (0.13 amps) that was read from drive parameter 003 - [Output Current]. To determine the data type for the parameter and its required scaling, see the specific drive documentation.

Figure 55 - Example Read Single Response Data File

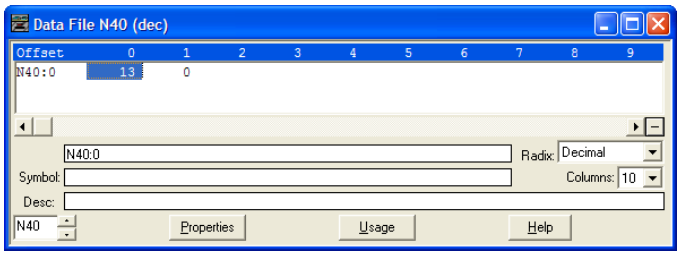

Figure 56 shows example ladder logic to correctly format the three possible data types for read messages in the MicroLogix 1100/1400 controller.

Figure 56 - Example Ladder Logic to Format Parameter Data Types for Reads

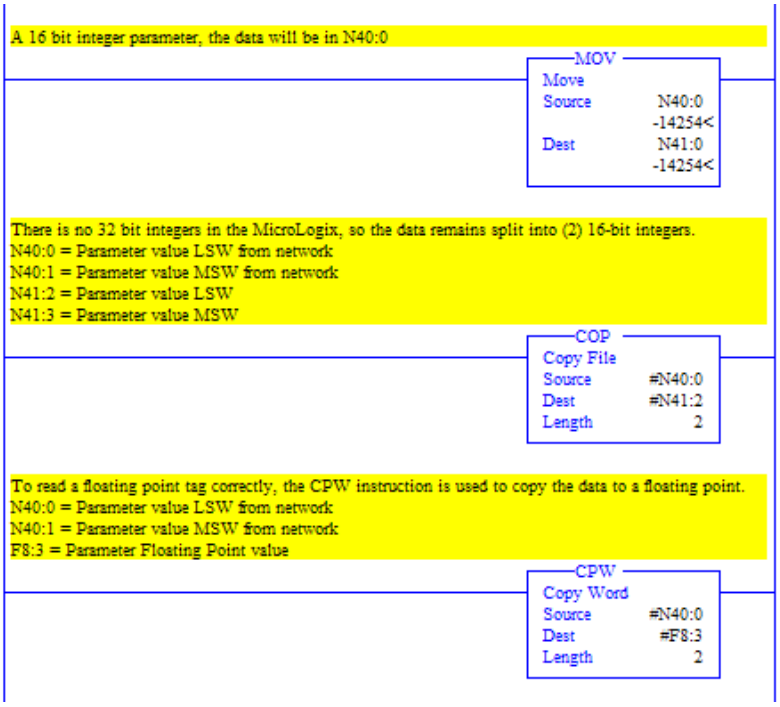

For 16-bit Integer Parameters – All PowerFlex 7-Class

For 32-bit Integer Parameters – All PowerFlex 7-Class

For 32-bit REAL (Floating Point) Parameters – PowerFlex 700S

MicroLogix 1100/1400 Controller Example Ladder Logic Program to Write a Single Parameter Using Read/Write Parameter Service

A Write Parameter message is used to write to a single parameter. This write message example writes a value to parameter 140 - [Accel Time 1] in a PowerFlex 7-Class drive.

Figure 57 - Example Ladder Logic to Write a Single Parameter

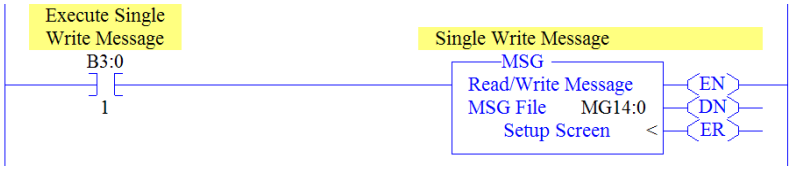

Important: If the explicit message single write must be written continuously, use DPI Parameter Object Class code 0x93 and attribute A (10 decimal; see page 133). This writes to RAM—not NVS (EEPROM) memory. This example single write message using Class code F writes to NVS. Over time, continuous writes will exceed the EEPROM life cycle and cause the drive to malfunction.

MicroLogix 1100/1400 Controller – Formatting a Message to Write a Single Parameter Using Read/Write Parameter Service

Figure 58 - Write Parameter Message Configuration Screens

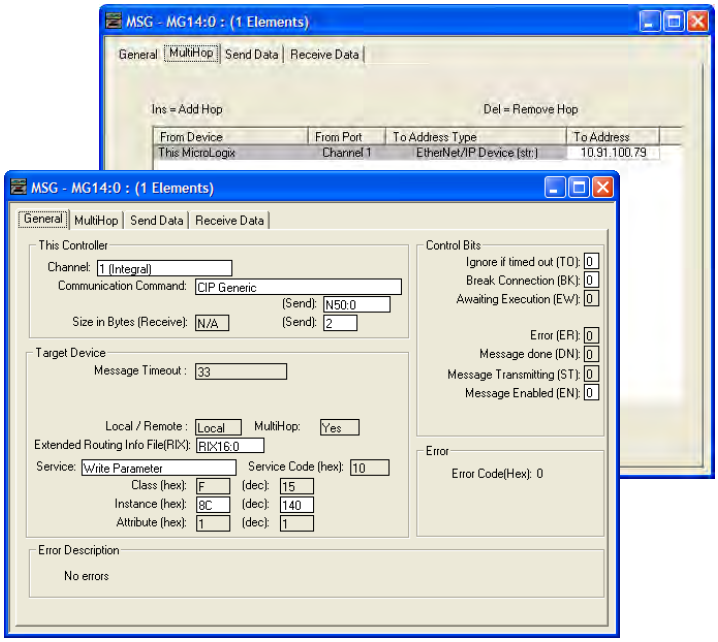

The following table identifies the data that is required in each box to configure a message to write a single parameter.

General Tab	Example Value	Description
Channel	1	Controller port to which the network is connected.
Comm... Command	CIP Generic	Used to access the Parameter Object in the adapter.
Data Table Address	N50:0	An unused controller data table address containing the message instruction. This address is the starting word of the destination file.
Size in Bytes	2 (3)	Number of bytes to be transferred. Each byte size is an 8-bit integer.
Extended Routing...	RIX16:0	An unused routing information file for the controller.
Service (1)	Write Parameter	Code for the requested service.
Instance (2)	140 (Dec.)	Instance number is the same as the parameter number.
MultiHop Tab	**Example Value**	**Description**
To Address	10.91.100.79	IP address of the adapter connected to the drive.

(1) The default setting for Service is 'Custom', enabling entry of a Service Code not available from the Service pull-down menu. When choosing a Service other than 'Custom' from the pull-down menu, an appropriate Hex. value is automatically assigned to the Service Code box which is dimmed (unavailable).

(2) Only drive parameters (Port 0) can be written to using Parameter Object Class code 0x0F. To write to a parameter of a peripheral in another port, use DPI Parameter Object Class code 0x93 (see page 133).

(3) In this example, Accel Time 1 is a 16-bit parameter. If the parameter being written to is a 32-bit parameter, the Size in Bytes would be set to 4. When the parameter being written to is a 32-bit REAL (floating point) data type, the size in bytes would be set to 4. See the drive documentation to determine the size of the parameter and its data type (16-bit or 32-bit integer or REAL).

MicroLogix 1100/1400 Controller Example Write Single Request Data

In this message example, we use the data table address in Figure 59 to store the request value (10.0 sec.) that was written to drive parameter 140 - [Accel Time 1]. To determine the data type for the parameter and its required scaling, see the specific drive documentation.

Figure 59 - Example Write Single Request Data File

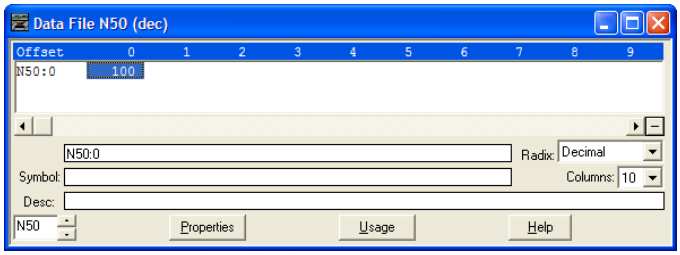

Figure 60 shows example ladder logic to correctly format the three possible data types for write messages in the MicroLogix 1100/1400 controller.

Figure 60 - Example Ladder Logic to Format Parameter Data Types for Writes

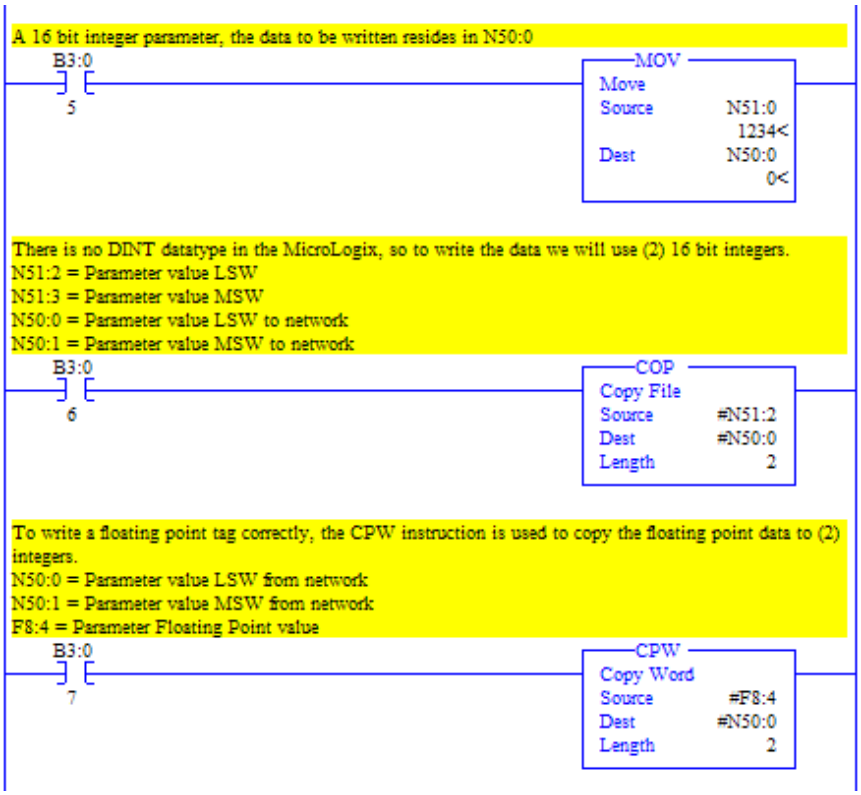

For 16-bit Integer Parameters – All PowerFlex 7-Class Drives

For 32-bit Integer Parameters – All PowerFlex 7-Class Drives

For 32-bit REAL (Floating Point) Parameters – PowerFlex 700S Drives

MicroLogix 1100/1400 Controller Explicit Messaging Using the Generic Get/Set Attribute Service

MicroLogix 1100/1400 Controller Example Ladder Logic Program to Read a Single Parameter

A Generic Get Attribute Single message is used to read a single parameter. This read message example reads the value of parameter 003 - [Output Current] in a PowerFlex 7-Class drive.

Important: See Table 17 on page 106 for limitations of PowerFlex 7-Class drives when using Class code 0x93 for explicit messaging.

Figure 61 - Example Ladder Logic to Read a Single Parameter

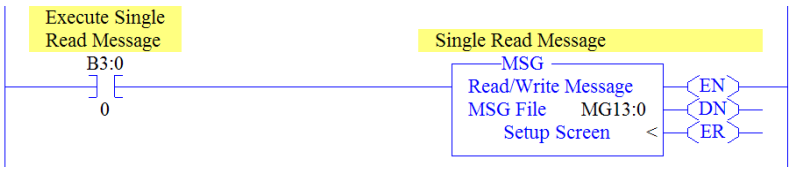

MicroLogix 1100/1400 Controller – Formatting a Message to Read a Single Parameter Using Generic Get/Set Attribute Service

Figure 62 - Generic Get Attribute Single Message Configuration Screens

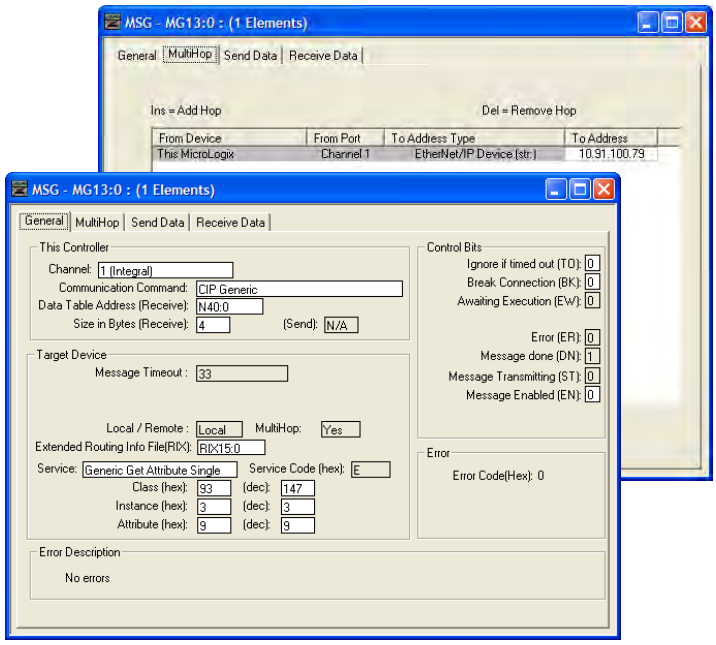

The following table identifies the data that is required in each box to configure a message to read a single parameter.

General Tab	Example Value	Description
Channel	1	Controller port to which the network is connected.
Comm… Command	CIP Generic	Used to access the Parameter Object in the adapter.
Data Table Address	N40:0	An unused controller data table address containing the message instruction. This address is the starting word of the destination file.
Size in Bytes	4 (3)	Number of bytes to be transferred. Each byte size is an 8-bit integer.
Extended Routing…	RIX15:0	An unused routing information file for the controller.
Service (1)	Generic Get Attribute Single	Code for the requested service.
Class	93 or 9F (Hex.) (4)	Class ID for the DPI Parameter Object.
Instance (2)	3 (Dec.)	Instance number is the same as the parameter number.
Attribute	9 (Dec.)	Attribute number for the Parameter Value attribute.
MultiHop Tab	**Example Value**	**Description**
To Address	10.91.100.79	IP address of the adapter connected to the drive.

(1) The default setting for Service is 'Custom', enabling entry of a Service Code not available from the Service pull-down menu. When choosing a Service other than 'Custom' from the pull-down menu, an appropriate Hex. value is automatically assigned to the Service Code box which is dimmed (unavailable).

(2) The instance is the parameter number in the drive (Port 0). For example, to read parameter 4 of a peripheral in Port 7 of an SMC-50 controller, the instance would be 21504 + 4 = 21508. See DPI Parameter Object on page 198 (Class code 0x93) to determine the instance number.

(3) In this example, Output Current is a 32-bit parameter. If the parameter being read is a 16-bit parameter, the Size in Bytes would be set to 2. When the parameter being read is a 32-bit REAL (floating point) data type, the size in bytes would be set to 4. See the drive documentation to determine the size of the parameter and its data type (16-bit or 32-bit integer or REAL).

(4) See Table 17 on page 106 for limitations of PowerFlex 7-Class drives when using DPI Parameter Object Class code 0x93 for explicit messaging.

MicroLogix 1100/1400 Controller Example Get Attribute Single Response Data

In this message example, we use the data table address in Figure 63 to store the response value (0.13 amps) that was read from drive parameter 003 - [Output Current]. To determine the data type for the parameter and its required scaling, see the specific drive documentation.

Figure 63 - Example Get Attribute Single Response Data File

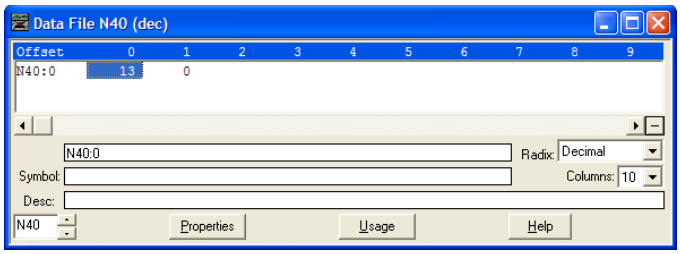

Figure 64 shows example ladder logic to correctly format the three possible data types for read messages in the MicroLogix 1100/1400 controller.

Figure 64 - Example Ladder Logic to Format Parameter Data Types for Gets

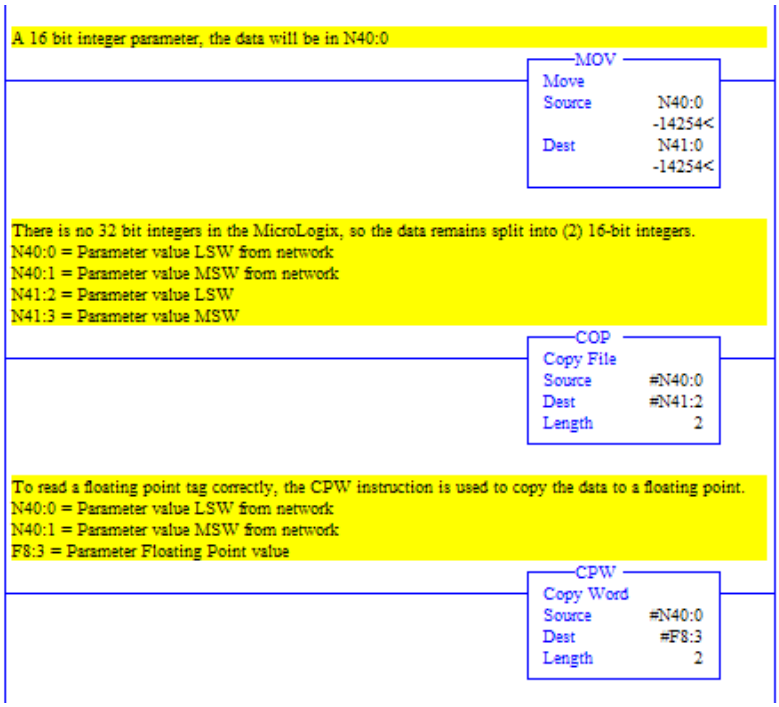

MicroLogix 1100/1400 Controller Example Ladder Logic Program to Write a Single Parameter Using Generic Get/Set Attribute Service

A Generic Set Attribute Single message is used to write to a single parameter. This write message example writes a value to parameter 140 - [Accel Time 1] in a PowerFlex 7-Class drive.

Important: See Table 17 on page 106 for limitations of PowerFlex 7-Class drives when using Class code 0x93 for explicit messaging.

Figure 65 - Example Ladder Logic to Write a Single Parameter

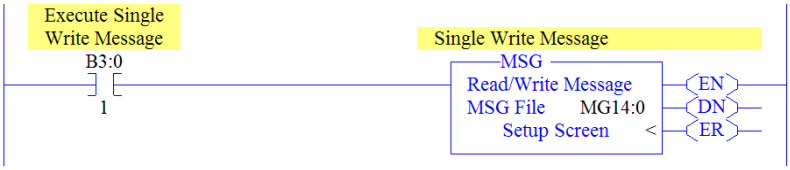

MicroLogix 1100/1400 Controller – Formatting a Message to Write a Single Parameter Using Generic Get/Set Attribute Service

Figure 66 - Generic Set Attribute Single Message Configuration Screens

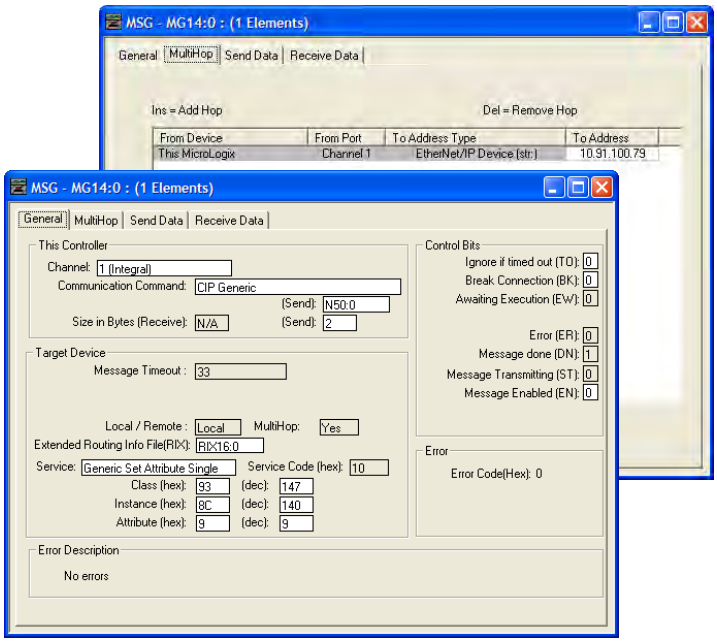

The following table identifies the data that is required in each box to configure a message to write a single parameter.

General Tab	Example Value	Description
Channel	1	Controller port to which the network is connected.
Comm… Command	CIP Generic	Used to access the Parameter Object in the adapter.
Data Table Address	N50:0	An unused controller data table address containing the message instruction. This address is the starting word of the destination file.
Size in Bytes	2 (4)	Number of bytes to be transferred. Each byte size is an 8-bit integer.
Extended Routing…	RIX16:0	An unused routing information file for the controller.
Service (1)	Generic Set Attribute Single	Code for the requested service.
Class	93 or 9F (Hex.) (5)	Class ID for the DPI Parameter Object.
Instance (2)	140 (Dec.)	Instance number is the same as the parameter number.
Attribute (3)	9 or 10 (Dec.)	Attribute number for the Parameter Value attribute.
MultiHop Tab	**Example Value**	**Description**
To Address	10.91.100.79	IP address of the adapter connected to the drive.

(1) The default setting for Service is 'Custom', enabling entry of a Service Code not available from the Service pull-down menu. When choosing a Service other than 'Custom' from the pull-down menu, an appropriate Hex. value is automatically assigned to the Service Code box which is dimmed (unavailable).

(2) The instance is the parameter number in the drive (Port 0). For example, to write to parameter 4 of a peripheral in Port 5 of an SMC-50 controller, the instance would be 21504 + 4 = 21508. See DPI Parameter Object on page 198 (Class code 0x93) to determine the instance number.

(3) Setting the Attribute value to '9' will write the parameter value to the drive's Nonvolatile Storage (EEPROM) memory, which retains the parameter value even after the drive is power cycled. **Important:** When set to '9', the EEPROM may quickly exceed its life cycle and cause the drive to malfunction. Setting the Attribute value to '10' will write the parameter value to temporary memory, which deletes the parameter value after the drive is power cycled. When frequent write messages are required, we recommend using the '10' setting.

(4) In this example, Accel Time 1 is a 16-bit parameter. If the parameter being written to is a 32-bit parameter, the Size in Bytes would be set to 4.

(5) See Table 17 on page 106 for limitations of PowerFlex 7-Class drives when using DPI Parameter Object Class code 0x93 for explicit messaging.

MicroLogix 1100/1400 Controller Example Set Attribute Single Request Data

In this message example, we use the data table address in Figure 67 to store the request value (10.0 sec.) that was written to drive parameter 140 - [Accel Time 1]. To determine the data type for the parameter and its required scaling, see the specific drive documentation.

Figure 67 - Example Set Attribute Single Request Data File

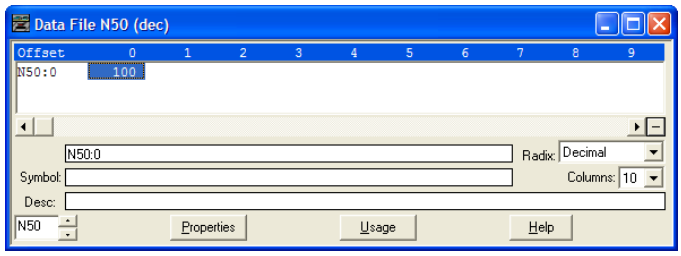

Figure 68 shows example ladder logic to correctly format the three possible data types for write messages in the MicroLogix 1100/1400 controller.

Figure 68 - Example Ladder Logic to Format Parameter Data Types for Sets

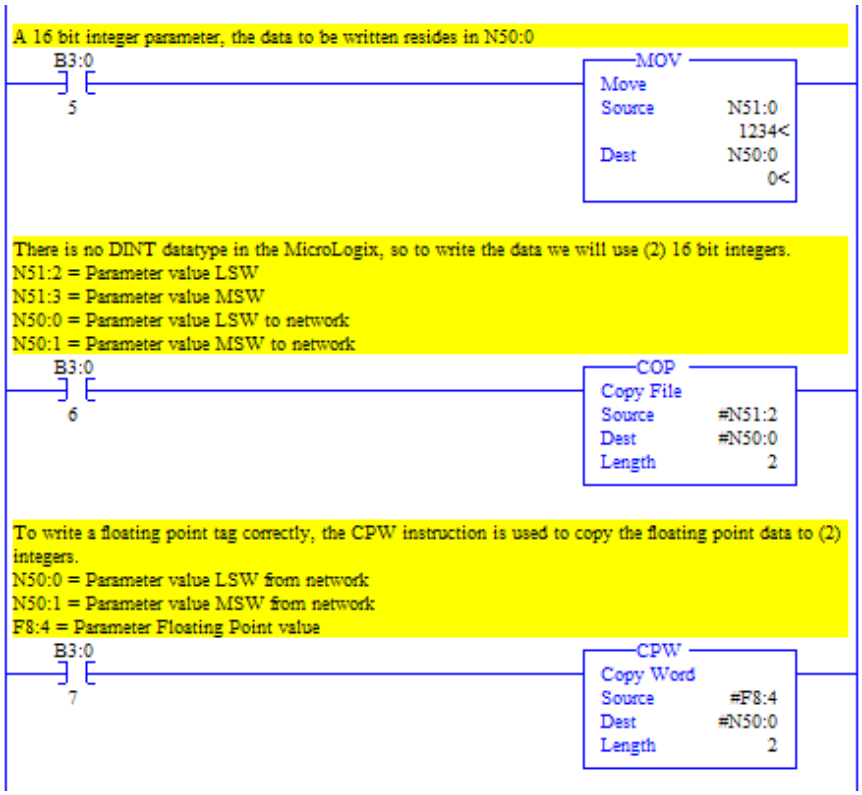

For 16-bit Integer Parameters – All PowerFlex 7-Class Drives

For 32-bit Integer Parameters – All PowerFlex 7-Class Drives

For 32-bit REAL (Floating Point) Parameters – PowerFlex 700S Drives

MicroLogix 1100/1400 Controller Example Ladder Logic Program to Read Multiple Parameters Using Generic Get/Set Attribute Service

A Custom scattered read message is used to read the values of multiple parameters. This read message example reads the values of these five parameters.

PowerFlex 7-Class Drive
• Parameter 001 - [Output Freq] • Parameter 003 - [Output Current] • Parameter 006 - [Output Voltage] • Parameter 012 - [DC Bus Voltage] • Parameter 017 - [Analog In1 Value]

See DPI Parameter Object on page 198 (Class code 0x93) for parameter numbering.

Important: See Table 17 on page 106 for limitations of PowerFlex 7-Class drives when using Class code 0x93 for explicit messaging.

Figure 69 - Example Ladder Logic to Read Multiple Parameters

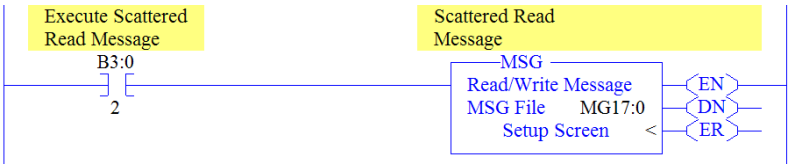

MicroLogix 1100/1400 Controller – Formatting a Message to Read Multiple Parameters Using Generic Get/Set Attribute Service

Figure 70 - Custom Scattered Read Message Configuration Screens

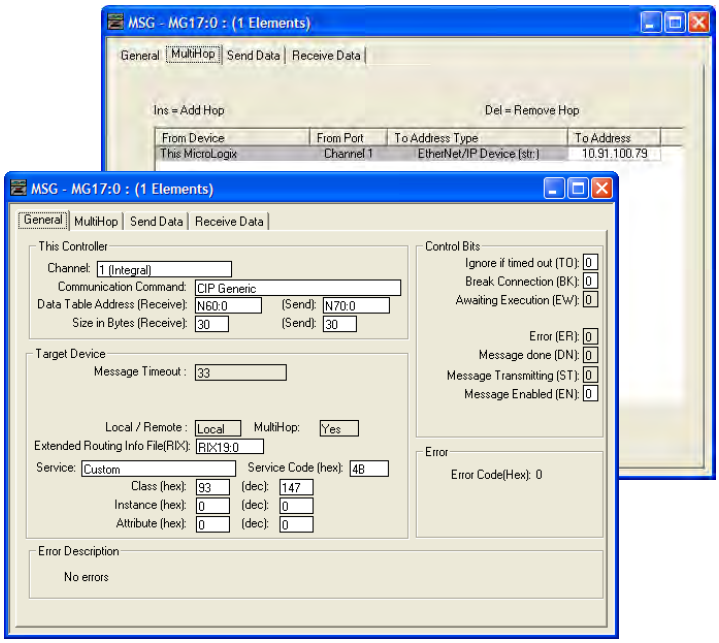

The following table identifies the data that is required in each box to configure a message to read multiple parameters.

General Tab	Example Value	Description
Channel	1	Controller port to which the network is connected.
Comm… Command	CIP Generic	Used to access the Parameter Object in the adapter.
Data Table Address	N60:0	An unused controller data table address containing the message instruction. This address is the starting word of the destination file.
Size in Bytes	30 (2)	Number of bytes to be transferred. Each byte size is an 8-bit integer.
Extended Routing…	RIX19:0	An unused routing information file for the controller.
Service (1)	Custom	Required for scattered messages.
Service Code	4B (Hex.)	Code for the requested service.
Class	93 or 9F (Hex.) (3)	Class ID for the DPI Parameter Object.
Instance	0 (Dec.)	Required for scattered messages.
Attribute	0 (Dec.)	Required for scattered messages.
MultiHop Tab	**Example Value**	**Description**
To Address	10.91.100.79	IP address of the adapter connected to the drive.

(1) The default setting for Service is 'Custom', enabling entry of a Service Code not available from the Service pull-down menu. When choosing a Service other than 'Custom' from the pull-down menu, an appropriate Hex. value is automatically assigned to the Service Code box which is dimmed (unavailable).

(2) In this example, we are reading five parameters. Each parameter being read requires three contiguous 16-bit words. Scattered read messages always assume that every parameter being read is a 32-bit parameter, regardless of its actual size. Therefore, the Size in Bytes must be set to 30. The data structure format is the same as shown on page 141. Maximum length is 66 words (132 bytes), which equates to 22 parameters. For parameter numbering, see DPI Parameter Object on page 198 (Class code 0x93).

(3) See Table 17 on page 106 for limitations of PowerFlex 7-Class drives when using DPI Parameter Object Class code 0x93 for explicit messaging.

MicroLogix 1100/1400 Controller Example Scattered Read Request Data

In this message example, we use the data table addresses in Figure 71 or Figure 71 to store the request values to be read from these drive parameters.

PowerFlex 7-Class Drive
• Parameter 001 - [Output Freq] • Parameter 003 - [Output Current] • Parameter 006 - [Output Voltage] • Parameter 012 - [DC Bus Voltage] • Parameter 017 - [Analog In1 Value]

See DPI Parameter Object on page 198 (Class code 0x93) for parameter numbering.

Figure 71 - Example Scattered Read Request Data File for PowerFlex 7-Class Drive

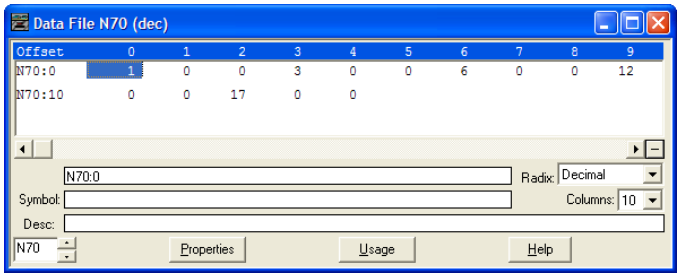

MicroLogix 1100/1400 Controller Example Scattered Read Response Data

In this message example, we use the data table addresses in Figure 72 to store the response values that were read from the requested drive parameters.

Figure 72 - Example Scattered Read Response Data File for PowerFlex 7-Class Drive

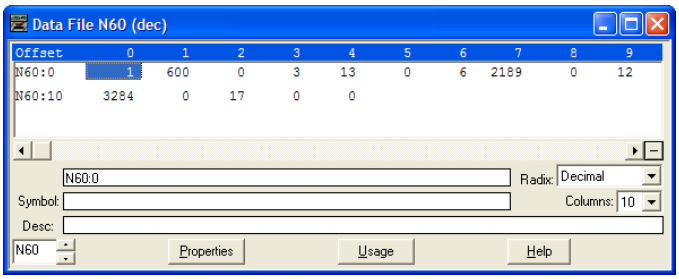

In this example, the parameters have the following values.

PowerFlex 7-Class Drive Parameter	Address	Read Value
1 - [Output Freq]	N60:1	32.5 Hz
3 - [Output Current]	N60:4	0.01 Amp
6 - [Output Voltage]	N60:7	118.7 VAC
12 - [DC Bus Voltage]	N60:10	329.2 VDC
17 - [Analog In2 Value]	N60:13	8.318 mA

MicroLogix 1100/1400 Controller Example Ladder Logic Program to Write Multiple Parameters Using Generic Get/Set Attribute Service

A Custom scattered write message is used to write to multiple parameters. This write message example writes the following values to these five parameters.

PowerFlex 7-Class Drive Parameter	Write Value
141 - [Accel Time 2]	11.1 Sec.
143 - [Decel Time 2]	22.2 Sec.
105 - [Preset Speed 5]	33.3 Hz.
106 - [Preset Speed 6]	44.4 Hz.
107 - [Preset Speed 7]	55.5 Hz.

See DPI Parameter Object on page 198 (Class code 0x93) for parameter numbering.

Important: See Table 17 on page 106 for limitations of PowerFlex 7-Class drives when using Class code 0x93 for explicit messaging.

Figure 73 - Example Ladder Logic to Write Multiple Parameters

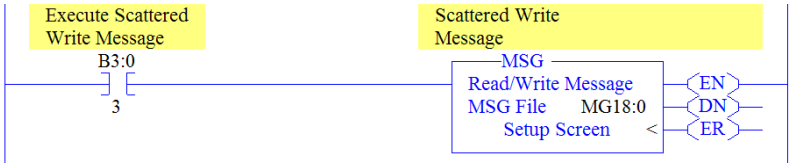

Important: If the explicit message scattered write must be written continuously, then use a separate Generic Set service explicit message single write for each parameter using DPI Parameter Object Class code 0x93 and attribute A (10 decimal; see page 133). Attribute A writes to RAM—not NVS (EEPROM) memory. This example scattered write message using attribute 0 writes to NVS. Over time, continuous writes will exceed the EEPROM life cycle and cause the drive to malfunction.

MicroLogix 1100/1400 Controller – Formatting a Message to Write Multiple Parameters Using Generic Get/Set Attribute Service

Figure 74 - Custom Scattered Write Multiple Message Configuration Screens

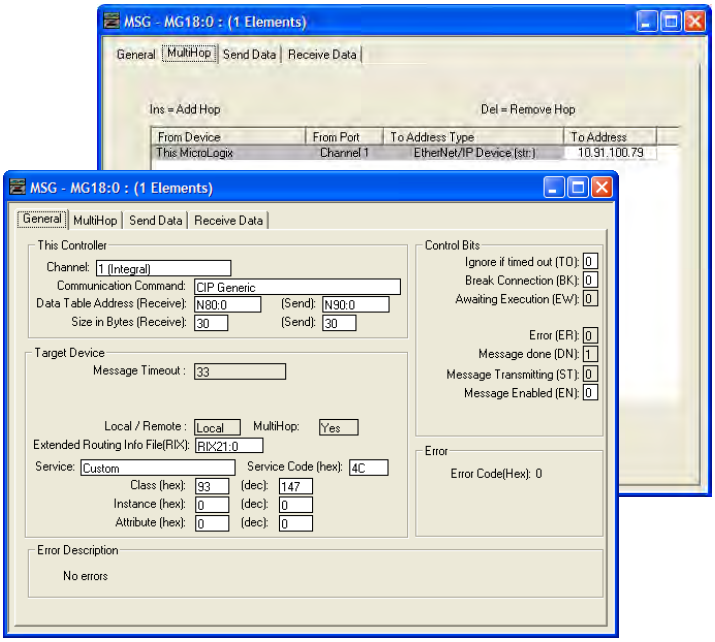

The following table identifies the data that is required in each box to configure a message to write multiple parameters.

General Tab	Example Value	Description
Channel	1	Controller port to which the network is connected.
Comm… Command	CIP Generic	Used to access the Parameter Object in the adapter.
Data Table Address	N80:0	An unused controller data table address containing the message instruction. This address is the starting word of the destination file.
Size in Bytes	30 (2)	Number of bytes to be transferred. Each byte size is an 8-bit integer.
Extended Routing…	RIX21:0	An unused routing information file for the controller.
Service (1)	Custom	Required for scattered messages.
Service Code	4C (Hex.)	Code for the requested service.
Class	93 or 9F (Hex.) (3)	Class ID for the DPI Parameter Object.
Instance	0 (Dec.)	Required for scattered messages.
Attribute	0 (Dec.)	Required for scattered messages.
MultiHop Tab	**Example Value**	**Description**
To Address	10.91.100.79	IP address of the adapter connected to the drive.

(1) The default setting for Service is 'Custom', enabling entry of a Service Code not available from the Service pull-down menu. When choosing a Service other than 'Custom' from the pull-down menu, an appropriate Hex. value is automatically assigned to the Service Code box which is dimmed (unavailable).

(2) In this example, we are writing to five parameters. Each parameter being written to requires three contiguous 16-bit words. Scattered write messages always assume that every parameter being written to is a 32-bit parameter, regardless of its actual size. Therefore, the Size in Bytes must be set to 30. The data structure format is the same as shown on page 120. Maximum length is 66 words (132 bytes), which equates to 22 parameters. For parameter numbering, see DPI Parameter Object on page 198 (Class code 0x93).

(3) See Table 17 on page 106 for limitations of PowerFlex 7-Class drives when using DPI Parameter Object Class code 0x93 for explicit messaging.

MicroLogix 1100/1400 Controller Example Scattered Write Request Data

In this message example, we use the data table addresses in Figure 75 to store the request values to be written to these drive parameters.

See DPI Parameter Object on page 198 (Class code 0x93) for parameter numbering.

Figure 75 or Figure 76 shows the parameter values.

Figure 75 - Example Scattered Write Request Data File for PowerFlex 7-Class Drive

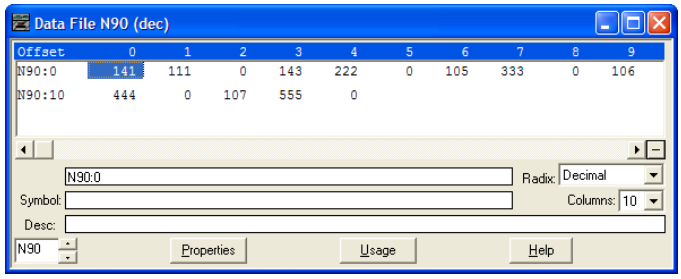

MicroLogix 1100/1400 Controller Example Scattered Write Response Data

In this message example, we use the data table addresses in Figure 76 to store the response values that were written to the requested drive parameters. Values of '0' indicate no errors occurred.

Figure 76 - Example Scattered Write Response Data File for PowerFlex 7-Class Drive

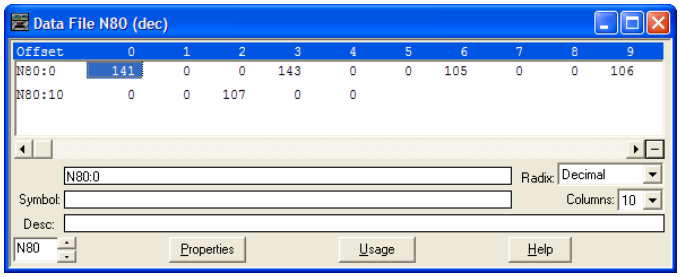

The results of the explicit message appear in the destination tag array N80 (Figure 76). Values of '0' indicate no errors occurred.

MicroLogix 1100/1400 Controller – Explanation of Request and Response Data for Read/Write Multiple Messaging

The data structures in Figure 77 and Figure 78 use 16-bit words and can accommodate up to 22 parameters in a single message. In the Response Message, a parameter number with the high bit set indicates that the associated parameter value field contains an error code (parameter number in response data will be negative).

Important: See Table 17 on page 106 for limitations of PowerFlex 7-Class drives when using Class code 0x93 for explicit messaging.

Figure 77 - Data Structures for Scattered Read Messages

	Request (Source Data)
Word 0	Parameter Number
1	Pad Word
2	Pad Word
3	Parameter Number
4	Pad Word
5	Pad Word
6	Parameter Number
7	Pad Word
8	Pad Word
9	Parameter Number
10	Pad Word
11	Pad Word
12	Parameter Number
13	Pad Word
14	Pad Word
⋮	

	Response (Destination Data)
Word 0	Parameter Number
1	Parameter Value LSW
2	Parameter Value MSW
3	Parameter Number
4	Parameter Value LSW
5	Parameter Value MSW
6	Parameter Number
7	Parameter Value LSW
8	Parameter Value MSW
9	Parameter Number
10	Parameter Value LSW
11	Parameter Value MSW
12	Parameter Number
13	Parameter Value LSW
14	Parameter Value MSW
⋮	

63	Parameter Number
64	Pad Word
65	Pad Word

63	Parameter Number
64	Parameter Value LSW
65	Parameter Value MSW

Figure 78 - Data Structures for Scattered Write Messages

	Request (Source Data)
Word 0	Parameter Number
1	Parameter Value LSW
2	Parameter Value MSW
3	Parameter Number
4	Parameter Value LSW
5	Parameter Value MSW
6	Parameter Number
7	Parameter Value LSW
8	Parameter Value MSW
9	Parameter Number
10	Parameter Value LSW
11	Parameter Value MSW
12	Parameter Number
13	Parameter Value LSW
14	Parameter Value MSW
⋮	
63	Parameter Number
64	Parameter Value LSW
65	Parameter Value MSW

	Response (Destination Data)
Word 0	Parameter Number
1	Pad Word
2	Pad Word
3	Parameter Number
4	Pad Word
5	Pad Word
6	Parameter Number
7	Pad Word
8	Pad Word
9	Parameter Number
10	Pad Word
11	Pad Word
12	Parameter Number
13	Pad Word
14	Pad Word
⋮	
63	Parameter Number
64	Pad Word
65	Pad Word

Troubleshooting

This chapter provides information for diagnosing and troubleshooting potential problems with the adapter and network.

Topic	Page
Understanding the Status Indicators	143
Port Status Indicator	144
Network Status Indicator	145
Link (LS1, LS2) Status Indicator	145
NET A Status Indicator	145
Hardware Reset via Node Switches	146
Viewing Adapter Diagnostic Items	146
Viewing and Clearing Events	149

Understanding the Status Indicators

The adapter has four status indicators. They can be viewed on the adapter or through the device cover.

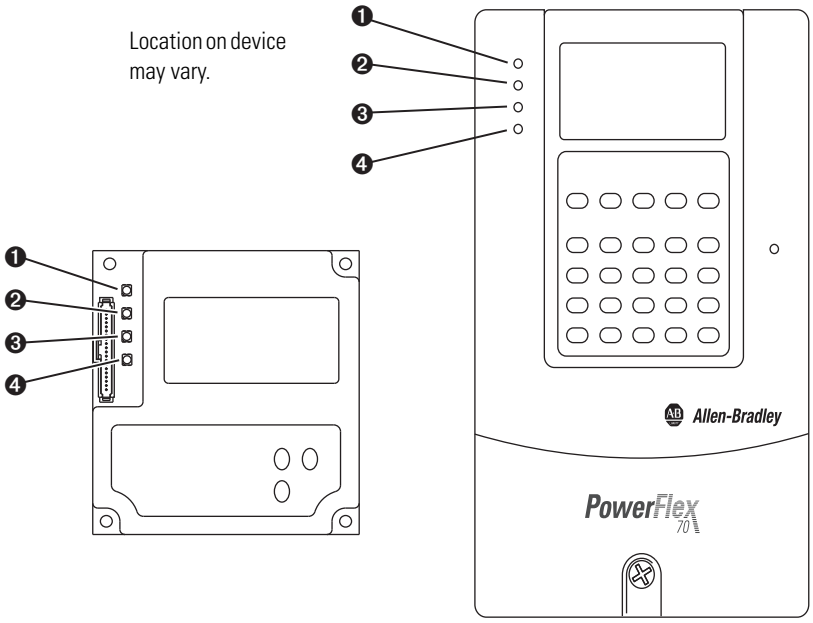

Item	Indicator Name	Description	See
❶	PS	DPI Connection Status	page 144
❷	NS	Network Status	page 145
❸	LS1	Link Status 1	page 145
❹	LS2	Link Status 2	page 145

Port Status Indicator

The LED indicates the status of the adapter's connection to the device as shown in the table below.

Status	Cause	Corrective Action
Off	No power	Securely connect the adapter to the drive using the internal interface (ribbon) cable.
Orange	Peripheral is Connected to an incompatible product, or no DPI ping events are detected.	Verify that cables are securely connected and not damaged. Replace cables if necessary. Cycle power to the device. Verify that Host is an Allen-Bradley compatible product.
Flashing Orange	Requesting DPI I/O Connections	No action required this is normal operation if No DPI IO is enabled
Flashing Green	Normal Operation (DPI connected) - No I/O, or PLC in Program	Place the scanner in RUN mode. Program the controller to recognize and transmit I/O to the adapter. Configure the adapter for the program in the controller. Normal behavior if no DPI I/O is enabled.
Green	Normal Operation (DPI connected) - I/O Operational	No action required.
Red	DPI Problem, Bad CRC of Adapter Parameters or Flash Program	Replace adapter
Flashing Red	DPI Failure or Failed power-on diagnostic test (hardware failure)	Clear faults in the adapter. Verify that all DPI cables on the drive are securely connected and not damaged. Replace cables if necessary. Verify that the DPI drive supports Datalinks. Configure the adapter to use a Datalink that is not already being used by another peripheral. Check mode switch settings. Cycle power to the device If cycling power does not correct the problem, the adapter parameter settings may have been corrupted. Reset defaults and reconfigure the adapter. If resetting defaults does not correct the problem, flash the adapter with the latest firmware release.
Flashing Green and Red	Flash update in progress	Normal during flash update process of application firmware

Network Status Indicator

The LED indicates the status of the adapter's connection to the device as shown in the table below.

Status	Cause	Corrective Action
Steady Off	No power OR No IP Address	Securely connect the adapter to the drive using the Internal Interface (ribbon) cable and to the network using an Ethernet cable. Correctly connect the Ethernet cable to the Ethernet connector. Set a unique IP address and disable BOOTP using a BOOTP server, or set a unique IP address by using adapter parameters. Apply power to the drive (or adapter if mounted in a DPI External Comms Kit).
Flashing Green	An IP address is configured, but no CIP connections are established, and an Exclusive Owner connection has not timed out	Place the controller in RUN mode, or apply power to the peer device that will send I/O. Program the controller or peer device to recognize and transmit I/O or make a messaging connection to the adapter. Configure the adapter for the program in the controller or the I/O from the peer device.
Steady Green	At least one CIP connection (any transport class) is established, and an Exclusive Owner connection has not timed out	No Action Required
Flashing Red	Connection has timed out see the "The EtherNet Adaptation of CIP" Specification sections 9-4.4 for detailed behavior description	Place the scanner in RUN mode, or apply power to the peer device that will send I/O. Check the IGMP Snooping/Ethernet Switches for correct operation. Check the amount of traffic on the network.
Steady Red	Duplicate IP Address detected	Configure the adapter to use a unique IP address and cycle power.
Orange	Adapter Failure (used in conjunction with PS orange)	Verify that cables are securely connected and not damaged. Replace cables if necessary. Cycle power to the drive. Verify that Host is a Scanport or Allen-Bradley compatible product. Replace Adapter
Flashing Green/Red	Self-test on power up	No action required

Link (LS1, LS2) Status Indicator

The LED indicates the status of the adapter's connection to the device as shown in the table below.

Status	Cause	Corrective Action
Blinking Yellow	Network at 10M Baud	Normal Operation
Blinking Green	Network at 100M Baudr	Normal Operation

NET A Status Indicator

This red/green bicolor LED indicates the status of the network connection as shown in the table below.

Status	Cause	Corrective Actions
Off	The adapter is not powered, the adapter is not properly connected to the network, the adapter needs an IP address, or BOOTP is enabled.	• Securely connect the adapter to the drive using the Internal Interface (ribbon) cable and to the network using an Ethernet cable. • Correctly connect the Ethernet cable to the Ethernet connector. • Set a unique IP address and disable BOOTP using a BOOTP server, or set a unique IP address by using adapter parameters. • Apply power to the drive (or adapter if mounted in a DPI External Comms Kit).
Steady Red	The adapter failed the duplicate IP address detection test.	• Configure the adapter to use a unique IP address and cycle power.
Flashing Red	An EtherNet/IP connection has timed out.	• Place the scanner in RUN mode, or apply power to the peer device that will send I/O. • Check the IGMP Snooping/Ethernet Switches for correct operation. • Check the amount of traffic on the network.

Status	Cause	Corrective Actions
Flashing Red/ Green	The adapter is performing a self-test.	No action required.
Flashing Green	The adapter is properly connected, has an IP address, and is connected to an EtherNet/IP network but does not have an I/O connection.	• Place the controller in RUN mode, or apply power to the peer device that will send I/O. • Program the controller or peer device to recognize and transmit I/O or make a messaging connection to the adapter. • Configure the adapter for the program in the controller or the I/O from the peer device.
Steady Green	The adapter is properly connected and communicating on the network to a controller.	No action required.

Hardware Reset via Node Switches

The special switch value of 888 allows the user to return the module to its factory default configuration. The setting of 888 shall reset all local configuration parameters on the adapter,

The setting of 888 is useful in situations where the user wishes to decommission an adapter (but may use it again later, e.g., as a spare module), or when the user wishes to commission a previously-used module that has unknown configuration parameters.

When the switches are set to 888, upon the next power up, a module shall behave as follows:

- Return to factory default settings local to the adapter.
- Cease communications on all communication ports.
- The Port Status LED shall transition to blinking red.
- The Network Status LED shall transition to off.

The purpose of the above behavior is to prevent the user from resetting the module and then never changing the switch setting from 888. Upon the next power up, the module would simply reset itself again.

Viewing Adapter Diagnostic Items

If you encounter unexpected communications problems, the adapter's diagnostic items may help you or Rockwell Automation personnel troubleshoot the problem. Adapter diagnostic items can be viewed with any of these drive configuration tools:

- LCD PowerFlex 7-Class HIM (Diagnostics/Device Items)
- Connected Components Workbench software, version 1.02 or later
- DriveExplorer software, version 2.01 or later
- DriveExecutive software, version 3.01 or later

Using the HIM to View Adapter Diagnostic Items

Step	Example Screen
1. Access parameters in the adapter. See Using the PowerFlex 7-Class HIM on page 28. 2. Press the ▲ or ▼ key to scroll to **Diagnostics**. 3. Press the ↵ (Enter) key to display the Diagnostics menu in the adapter. 4. Repeat steps 2 and 3 to enter the **Device Items** option. 5. Press the ▲ or ▼ key to scroll through the items.	Main Menu: Diagnostics Parameter Device Select Device Item # 3 Reference

Table 24 - Adapter Diagnostic Items

No.	Name	Description
1	Common Logic Cmd	The present value of the Common Logic Command being transmitted to the drive by this adapter.
2	Prod Logic Cmd	The present value of the Product Logic Command being transmitted to the drive by this adapter from the controller.
3	Reference	The present value of the Reference being transmitted to the drive by this adapter. Note that a 16-bit value will be sent as the Most Significant Word of the 32-bit field.
4	Common Logic Sts	The present value of the Common Logic Status being received from the drive by this adapter.
5	Prod Logic Sts	The present value of the Product Logic Status being received from the drive by this adapter to the controller.
6	Feedback	The present value of the Feedback being received from the drive by this adapter. Note that a 16-bit value will be sent as the Most Significant Word of the 32-bit field.
7	Datalink A1 In	The present value of respective Datalink In being transmitted to the drive by this adapter. (If not using a Datalink, this parameter should have a value of zero.)
8	Datalink A2 In	
9	Datalink B1 In	
10	Datalink B2 In	
11	Datalink C1 In	
12	Datalink C2 In	
13	Datalink D1 In	
14	Datalink D2 In	
15	Datalink A1 Out	The present value of respective Datalink Out being received from the drive by this adapter. (If the drive indicates a 16-bit datalink size, the value appears in the least significant 16 bits of this diagnostic item, and the most significant 16 bits of this diagnostic item are zero.)
16	Datalink A2 Out	
17	Datalink B1 Out	
18	Datalink B2 Out	
19	Datalink C1 Out	
20	Datalink C2 Out	
21	Datalink D1 Out	
22	Datalink D2 Out	
23	DPI Rx Errors	The present value of the DPI Receive error counter.
24	DPI Rx Error Max	The maximum value (since reset) of the DPI Receive error counter.
25	DPI Tx Errors	The present value of the DPI Transmit error counter.
26	DPI Tx Error Max	The maximum value (since reset) of the DPI Transmit error counter.
27	Boot Flash Count	Number of times the boot firmware in the adapter has been flash updated.
28	App Flash Count	Number of times the application firmware in the adapter has been flash updated.
29	M-S Input Size	Size of data transferred from the network to the drive.
30	M-S Output Size	Size of data transferred from the drive to the network.

No.	Name	Description
31 32 33 34 35 36	HW Addr 1 HW Addr 2 HW Addr 3 HW Addr 4 HW Addr 5 HW Addr 6	Decimal value of each byte in the adapter's Ethernet hardware address. 255:255:255:255:255:255 [HW Addr 1] [HW Addr 2] [HW Addr 3] [HW Addr 4] HW Addr 5] [HW Addr 6]
37 38 39 40	IP Addr Act 1 IP Addr Act 2 IP Addr Act 3 IP Addr Act 4	Value of each byte in the adapter's present IP address. A value of '0' appears if the adapter does not currently have an IP address. 255.255.255.255 [IP Addr Act 1] [IP Addr Act 2] [IP Addr Act 3] [IP Addr Act 4]
41 42 43 44	Subnet Act 1 Subnet Act 2 Subnet Act 3 Subnet Act 4	Value of each byte in the adapter's present subnet mask. A value of '0' appears if the adapter does not currently have a subnet mask. 255.255.255.255 [Subnet Act 1] [Subnet Act 2] [Subnet Act 3] [Subnet Act 4]
45 46 47 48	Gateway Act 1 Gateway Act 2 Gateway Act 3 Gateway Act 4	Value of each byte in the adapter's present gateway address. A value of '0' appears if the adapter does not currently have a gateway address. 255.255.255.255 [Gateway Act 1] [Gateway Act 2] [Gateway Act 3] [Gateway Act 4]
49	EN Rx Overruns	Number of receive buffer overruns reported by the Ethernet hardware.
50	EN Rx Packets	Number of Ethernet packets that the adapter has received.
51	EN Rx Errors	Number of receive errors reported by the Ethernet hardware.
52	EN Tx Packets	Number of Ethernet packets that the adapter has sent.
53	EN Tx Errors	Number of transmit errors reported by the Ethernet hardware.
54	Last TCP Reset	Last reason that the adapter reset or rejected a TCP/IP connection.
55	Missed IO Pkts	Number of incoming I/O connection packets that the adapter did not receive.
56	OPT Status	Operating status of optional I/O board in DPI External Comms Kit. For the meanings of the individual bits, see Viewing Adapter Diagnostic Items on page 146.
57	OPT RX Errors	Number of optional I/O board receive errors.
58	OPT FW Version	Firmware version of optional I/O board (in DPI External Comms Kit).

Viewing and Clearing Events

The adapter has an event queue to record significant events that occur in the operation of the adapter. When such an event occurs, an entry is put into the event queue. You can view the event queue with any of these drive configuration tools:

- LCD PowerFlex 7-Class HIM
- Connected Components Workbench software, version 1.02 or later
- DriveExplorer software, version 2.01 or later
- DriveExecutive software, version 1.01 or later
- Other clients using the DPI Fault object

The event queue can contain up to 32 entries. Eventually the event queue will become full, since its contents are retained through adapter resets. At that point, a new entry replaces the oldest entry. Only an event queue clear operation or adapter power cycle will clear the event queue contents.

Resetting the adapter to defaults has no effect on the event queue.

Using the HIM to View and Clear Events

Step	Example Screen
Viewing Events 1. Access parameters in the adapter. See Using the PowerFlex 7-Class HIM on page 28. 2. Press the ▲ or ▼ key to scroll to **Diagnostics**. 3. Press the ↵ (Enter) key to display the Diagnostics menu in the adapter. 4. Repeat steps 2 and 3 to enter the **Events** option and then **View Event Queue** option. 5. Press the ▲ or ▼ key to scroll through events. The most recent event is Event 1.	Main Menu: Diagnostics Parameter Device Select
Clearing Events 1. Access parameters in the adapter. See Using the PowerFlex 7-Class HIM on page 28. 2. Press the ▲ or ▼ key to scroll to **Diagnostics**. 3. Press the ↵ (Enter) key to display the Diagnostics menu in the adapter. 4. Repeat steps 2 and 3 to enter the **Events** option and then the **Clear Event** option or **Clr Event Queue** option. A message will pop up to confirm that you want to clear the message or queue. 5. Press the ↵ (Enter) key to confirm your request. If **Clr Event Queue** was selected, all event queue entries will then display 'No Event'.	Event Q: 1 E3 Ping Time Flt Dgn: Events View Event Queue Clear Event Clr Event Queue

Events

Many events in the event queue occur under normal operation. If you encounter unexpected communications problems, the events may help you or Allen-Bradley personnel troubleshoot the problem. The following events may appear in the event queue.

Table 25 - Adapter Events

Code	Event	Description
1	No Event	Empty event queue entry.
2	Device Power Up	Cold/hard boot.
3	Device Reset	Warm/soft boot.
4	Config CRC Error	Startup sequence detected corrupt NV storage.
5	App Updated	Startup sequence detected new application firmware in candidate area.
6	Boot Updated	Startup sequence detected new boot firmware in candidate area.
7	FATAL Error	A FATAL error was reported by the operating system.
8	DPI Bus Off	A bus-off condition is detected on DPI.
9	DPI Ping Timeout	No Ping message was received on DPI for longer than the maximum time allowed
10	DPI Port Invalid	The debounced DPI Pin ID is read as zero or seven after the peripheral has completed startup.
11	DPI Port Changed	The debounced DPI Pin ID has changed after the peripheral has completed startup.
12	DPI Host Reset	The drive issued a reset event.
13	DPI Baud 125K	The peripheral detects that the host is at 125 kbps.
14	DPI Baud 500K	The peripheral detects that the host is at 500 kbps.
15	DPI Host Invalid	Connected to a SCANport product and peripheral does not support a SCANport mode.
16	DPI Dup Port	Another peripheral with the same port number is already present.
17	DPI Type 0 Logon	The peripheral successfully logs in for Type 0 control.
18	DPI Type 0 Time	The peripheral has not received a Type 0 status message for longer than the maximum Type 0 time.
19	DPI DL Logon	The peripheral successfully logs into a data link.
20	DPI DL Error	The host rejects a login to a data link (e.g., data link not supported or already in use)
21	DPI DL Time	No Datalink status message is received on DPI for longer than the maximum time allowed
22	DPI Ctrl Disable	The peripheral has sent a “Soft Control Disable” command to the host.
23	DPI Ctrl Enable	The peripheral has sent a “Soft Control Enable” command to the host.
24	DPI Msg Timeout	A Client-Server message sent by the peripheral has not completed within one second.
25	DPI Manual Reset	Manual reset via DPI triggered.
31	Net Dup Address	IP address conflict.
32	Net Comm Fault	The peripheral detected a communications fault on the network.
33	Net Sent Reset	The peripheral received a reset from the network.
34	Net IO Close	An I/O connection from the network to the peripheral was closed.
35	Net Idle Fault	The peripheral is receiving "Idle" packets from the network.
36	Net IO Open	An I/O connection to the peripheral from the network has been opened.
37	Net IO Timeout	An I/O connection from the network to the Peripheral has timed out.
38	Net IO Size Err	EtherNet I/P I/O connection size mismatch error.
39	PCCC IO Close	The device sending PCCC Control messages to the Peripheral has set the PCCC Control Timeout to a value of zero.

Table 25 - Adapter Events (Continued)

Code	Event	Description
40	PCCC IO Open	The Peripheral has begun receiving PCCC Control messages (the PCCC Control Timeout was previously set to a non-zero value).
41	PCCC IO Timeout	The Peripheral has not received a PCCC control message for longer than the PCCC Control Timeout.
42	Msg Ctrl Open	The peripheral has sent a “Soft Control Enable“ command to the host.
43	Msg Ctrl Close	The peripheral has sent a “Soft Control Disable“ command to the host.
44	Msg Ctrl Timeout	A Client-Server message sent by the peripheral has not completed within one second.
45	Peer IO Open	The peripheral has received the first peer I/O message.
46	Peer IO Timeout	The Peripheral has not received a Peer I/O message for longer than the Peer I/O Timeout.
56	Email Failed	E-mail send failure.
58	Adapter Defaulted	Adapter parameters has been reset to default.
61	Net Link 1 Up	Link has been established on Eth Port 1
62	Net Link 1 Down	Link was lost on Eth Port 1.
63	Net Link 2 Up	Link has been established on Eth Port 2
64	Net Link 2 Down	Link was lost on Eth Port 2.
67	Net Ring Up	The Device Level Ring (DLR) status is Normal.
68	Net Ring Down	The Device Level Ring (DLR) status is Faulted.
69	Invalid Net Cfg	The adapter’s network address configuration parameters are invalid, or the network address provided by the BOOTP or DHCP server is invalid.
70	DHCP Response	The adapter received a response to its DHCP request.

Notes:

Viewing the Adapter Web Pages

This chapter provides instructions on how to monitor the adapter and connected PowerFlex drive by using the adapter's web interface.

Topic	Page
Accessing the Adapter Web Home Page	153
Viewing the Web Pages	153
Process Display Home Page	156
Browse DPI Device Folder	156
Diagnostics Web Page	157
Administrative Web Pages	160

Future enhancements may result in adapter web pages that look different than the examples shown in this chapter.

Accessing the Adapter Web Home Page

After configuring the adapter, you can view its web pages. These pages present information about the adapter, the device to which it is connected, and other DPI devices connected to or installed in the device such as a HIM or I/O card.

The adapter can be configured to automatically send email messages to desired addresses when selected device faults occur and/or are cleared when the adapter rakes a communication or idle fault action. Bit 0 of **Parameter 57-[Web Features]** can be used to protect the configured settings. For more details, see page 162.

Viewing the Web Pages

The adapter can be configured to automatically send e-mail messages to desired addresses when selected drive faults occur and/or are cleared, and/or when the adapter takes a communication or idle fault action.

Bit 0 of **Parameter 57 - [Web Features]** can be used to protect the configured settings. For more details, see page 162.

1. On a computer with access to the EtherNet/IP network on which the adapter/device is installed, launch a web browser such as Microsoft™ Internet Explorer, version 5.0 or later.

The computer can access the adapter web pages if it is connected to:

- The same network as the adapter.
- A network with access to the adapter's network via a gateway device (for example, a router).

2. In the Address box, type the IP address of the adapter.
3. Press ENTER.

The adapter web Home Page (Figure 79) appears.

Important: Using the browser's View >Refresh function will always re-display the adapter home page while viewing any of the adapter's web pages.

Figure 79 - Adapter Web Home Page Example

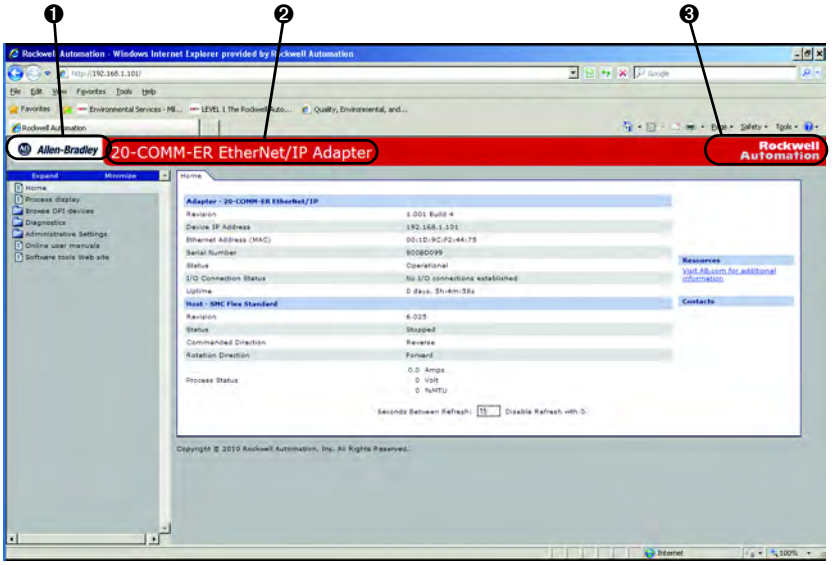

Title Bar on Adapter Web Pages

The title bar appears on the adapter Home Page and all of the adapter's other web pages. The title bar consists of three elements as shown in Figure 79.

Title Bar Element	Description
❶ Allen-Bradley logo	This logo is a hyperlink. Click it to view the ab.com web Home Page.
❷ Adapter Title	Shows the adapter type or user-configurable title.
❸ Rockwell Automation logo	This logo is a hyperlink. Click it to view the Rockwell Automation web Home Page.

Navigation Pane on Adapter Web Pages

The navigation pane appears on the left side of the adapter Home Page and all of the adapter's other web pages. The navigation pane consists of links and link folders which can be expanded or minimized. The following table shows all navigation pane links and link folders.

Navigation Pane Link/ Folder	Description
Home link	Click this link to view the adapter's Home Page (Figure 79).
Process display link	Click this link to view the host drive's Process Display pop-up window (Figure 81).
Browse DPI devices folder	Click this folder to expand and view the Port folders for all present DPI devices, including the drive, adapter, and other devices connected to the drive such as a HIM.
Diagnostics	Displays Ethernet/IP diagnostic information to aid in monitoring and troubleshooting the Ethernet/IP network.
Administrative Settings	Manage adapter settings such as password, IP address, and network configuration. Password Authorization is required to access subfolders.
Online user manuals link	Click this link to view Rockwell Automation's web page with documentation for drives, SMCs, and other devices.
Software tools Web site link	Click this link to view Allen-Bradley's web page with information about software tools such as DriveExplorer and DriveExecutive.

Figure 80 - Adapter Web Home Page Example

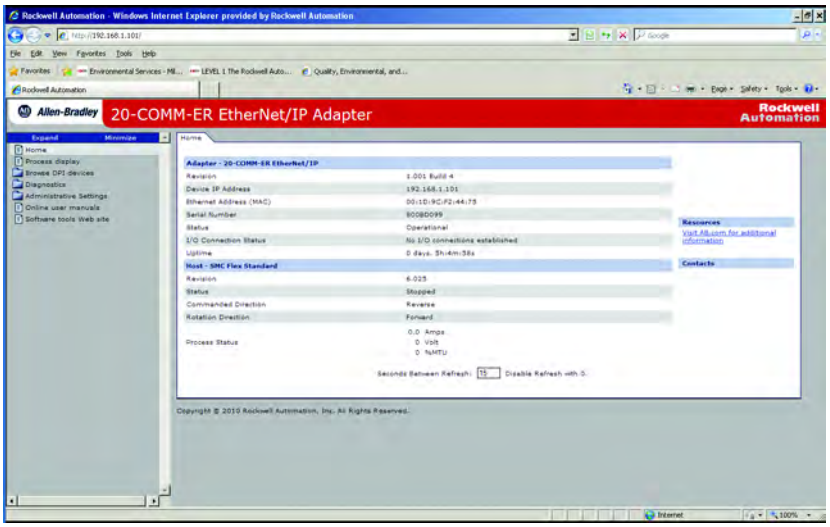

Process Display Home Page

The Process Display pop-up window dynamically shows the host drive's information. To view this window, click the 'Process display' link in the navigation pane.

Figure 81 - Example of Process Display Pop-up Window

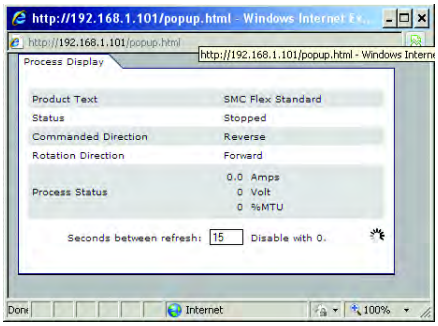

Browse DPI Device Folder

This folder gives access to the databases, fault and alarm queues and diagnostic data (if applicable) to all the devices connected to the DPI network.

Each Device on the DPI network has its own folder that has links to module information, parameters, diagnostic information, fault queues and alarm queue. The Parameters are further organized into the DPI groups defined for the specific device.

Figure 82 shows an example of an SMC-50 device acting as the DPI host on port 0 of the DPI network.

Figure 82 - Example of an SMC-50 Controller Acting as DPI Host

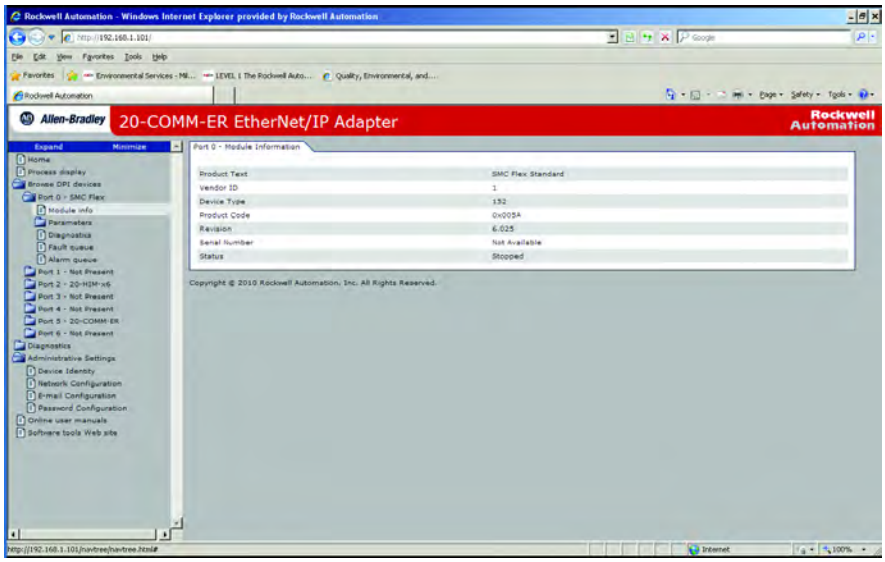

Parameters for the SMC-50 can be changed via the parameters web page by clicking on the Edit button near the bottom of the web page and entering the correct username and password when the authorization pop up window appears.

Note: PowerFlex drives on the network will not allow parameters to be changed via the Parameter Web page.

Figure 83 - Example of Parameter Web Page

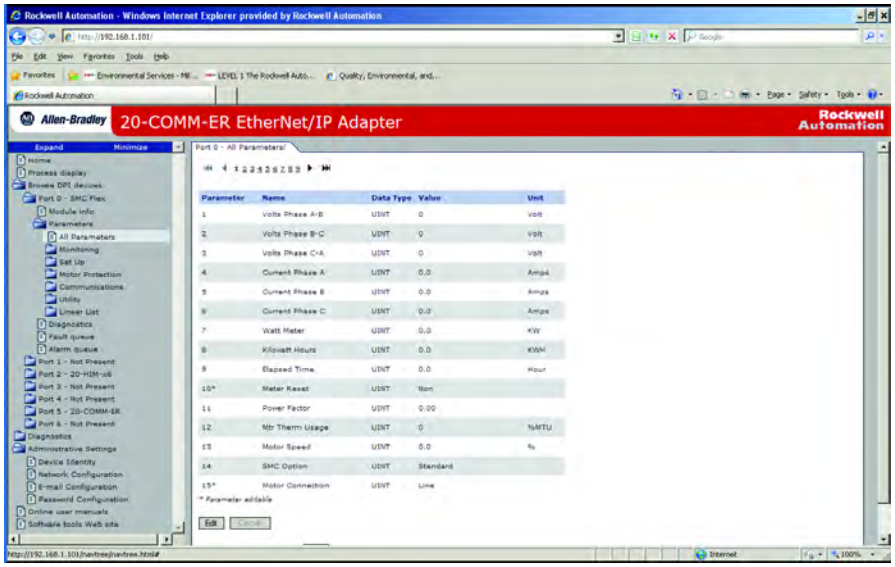

Diagnostics Web Page

The diagnostics web page provides the user with Adapter performance on the network detailing the configuration, status and traffic information about the EtherNet/IP network communications.

Diagnostic Overview link

This link provides a general overview of the Adapter's activity on the EtherNet/IP network.

Figure 84 - Diagnostic Overview Page

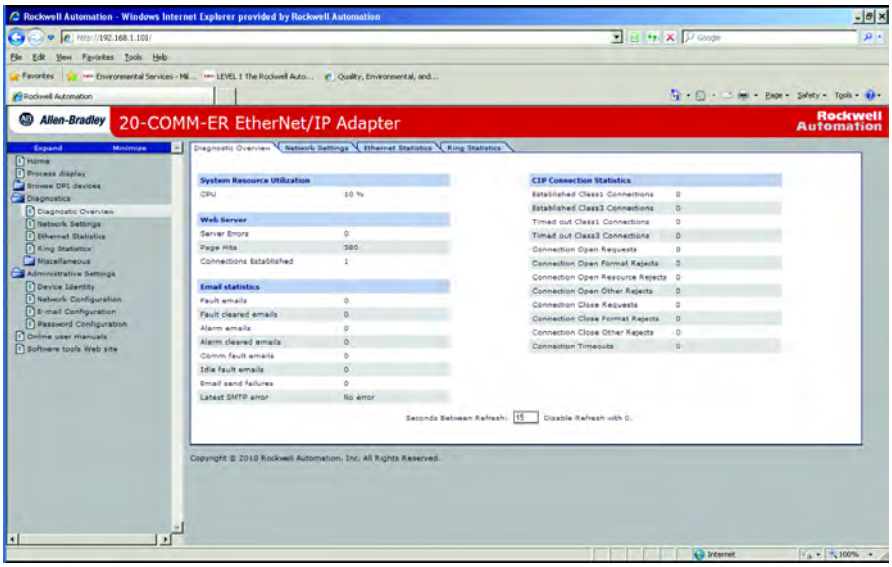

Network Setting Link

This link provides information about the adapter's Ethernet settings and network activities.

Figure 85 - Network Setting Page

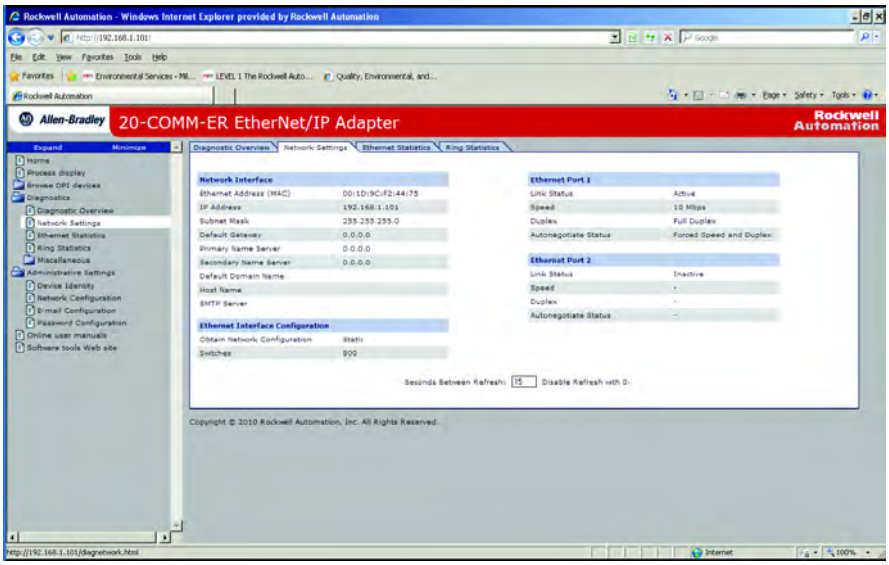

EtherNet/IP Statistics Link

This links displays information about the traffic activity on the EtherNet/IP network.

Figure 86 - EtherNet/IP Statistics Page

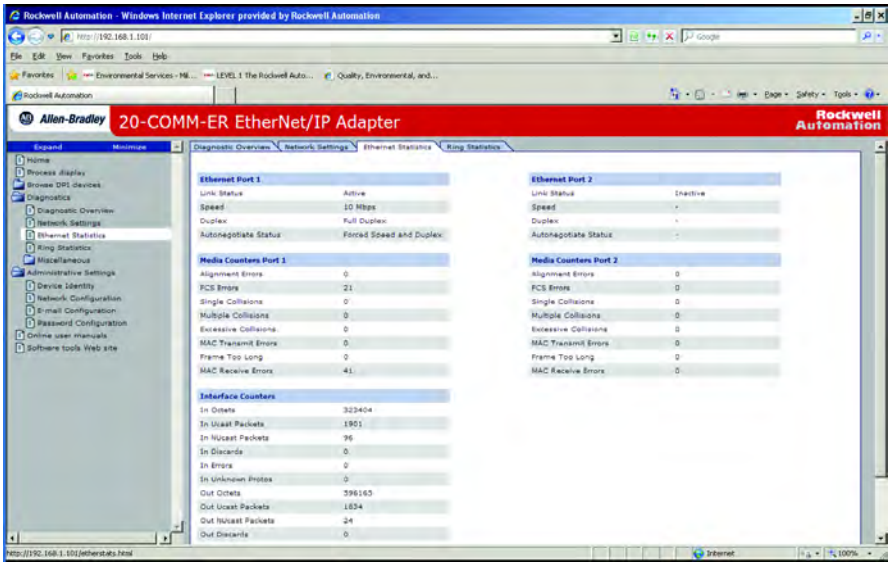

Ring Statistics link

This page displays configuration and status of the network and identifies the ring supervisor if the Ethernet network is configured as a ring.

Figure 87 - Ring Statistics Page

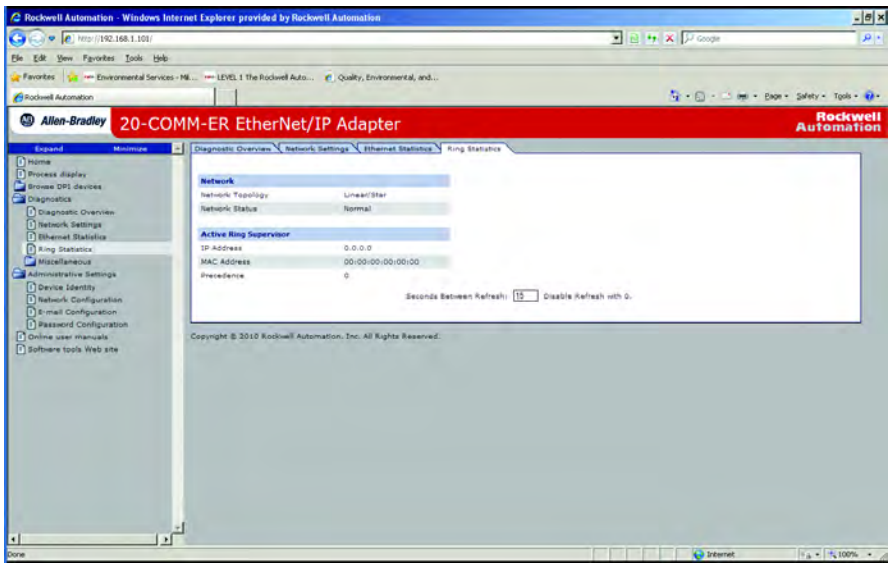

Crash Display Link

Figure 88 - Crash Display Page

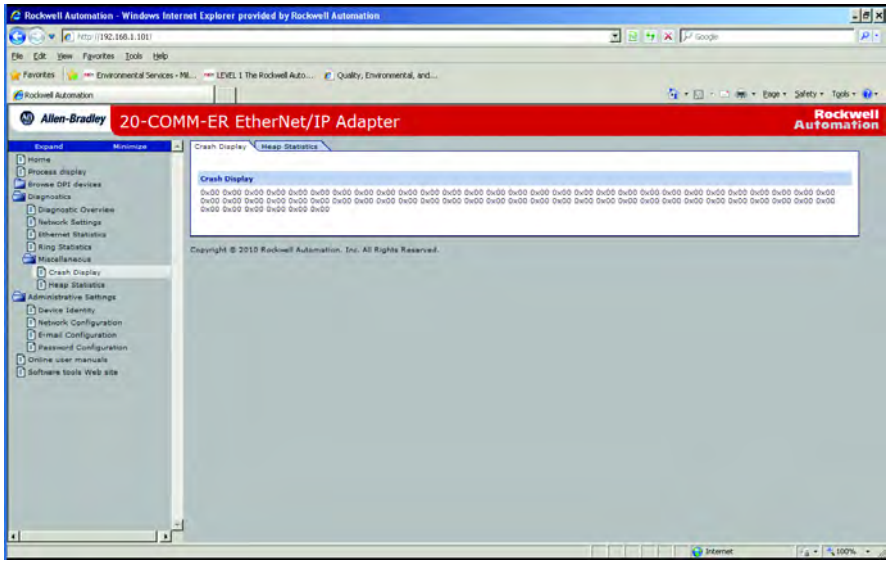

Heap Statistics Display link

Figure 89 - Heap Statistics Page

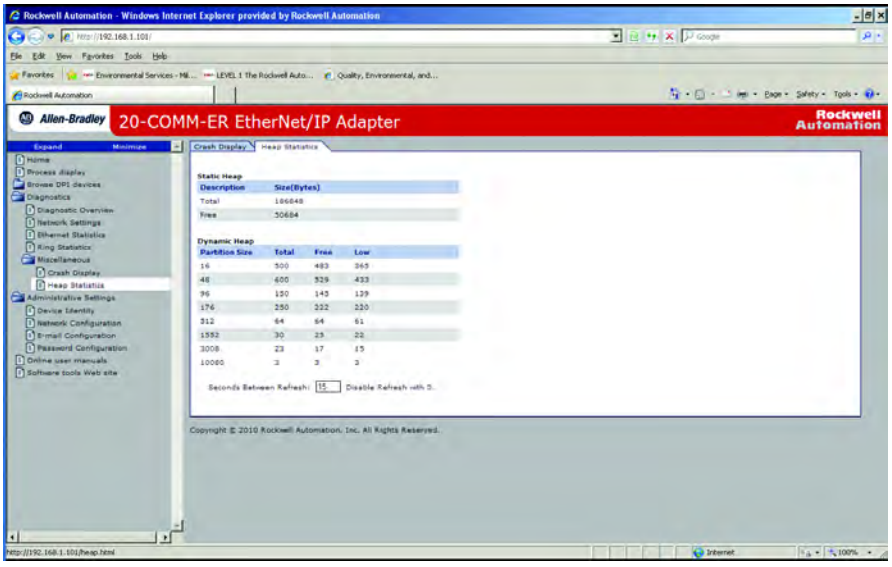

Administrative Web Pages

Administrative Web pages give the user access to the 20-COMM-ER module for the purpose of configuring the device for network operation and messaging.

Device Identity Link

The Device Identity link is used to give the Adapter an identity on the EtherNet/IP network that will be recognized by the user, software tools, and other devices on the network.

Figure 90 - Device Identity Page

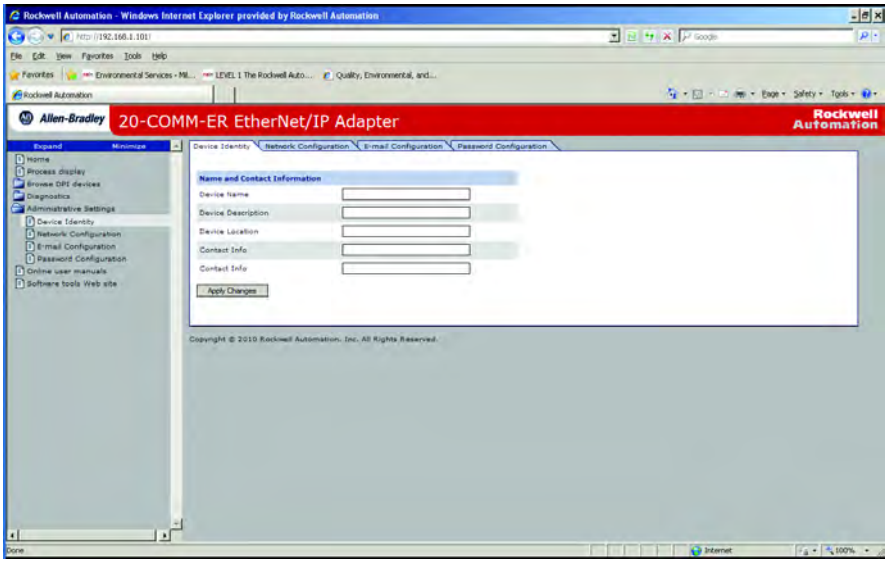

Network Configuration Link

The network configuration link allows setting of the TCP/IP layer of the Adapter, including IP address, Subnet mask, and gateway address.

Figure 91 - Network Configuration Page

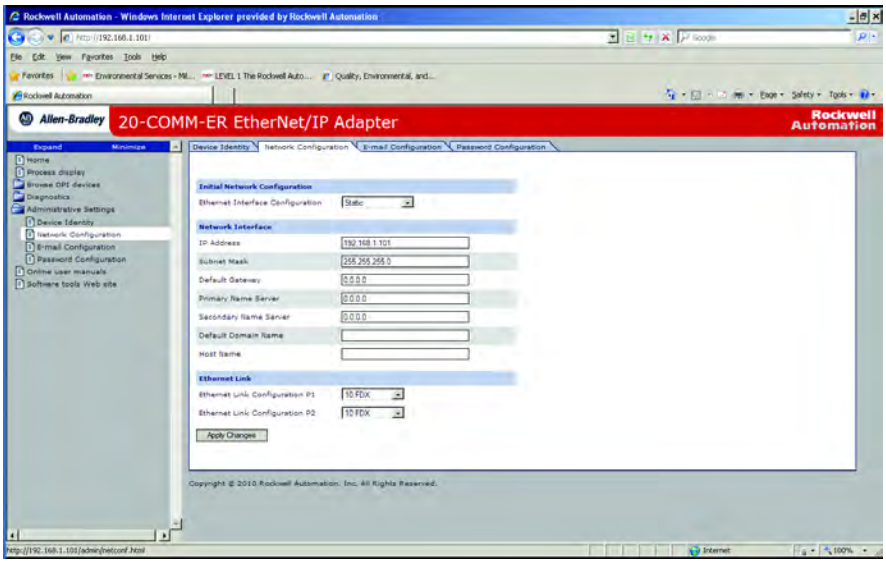

Email Configuration Link

The Configure E-mail Notification web page contains selections and data fields for configuring the adapter to automatically send email messages to desired addresses when selected types of events occur. To view this web page, click the 'Configure e-mail...' link (highlighted in Figure 92) in the navigation pane.

Figure 92 - E-mail Configuration Page

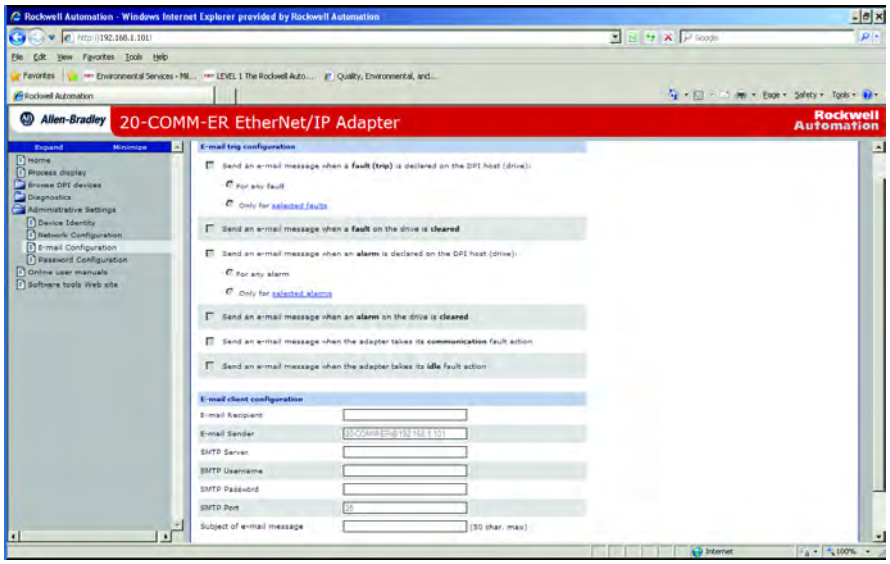

To configure email notification, perform the following steps.

1. Click the desired 'Send an e-mail message when...' check boxes you want to occur that will send email notification. If you only want email notification when selected faults/alarms occur:
   a. Click the respective fault and/or alarm radio buttons.
   b. Click the 'selected faults' link and/or 'selected alarms' link. Figure 93 shows an example faults configuration page.

Figure 93 - Example of Selected Faults Configuration Page

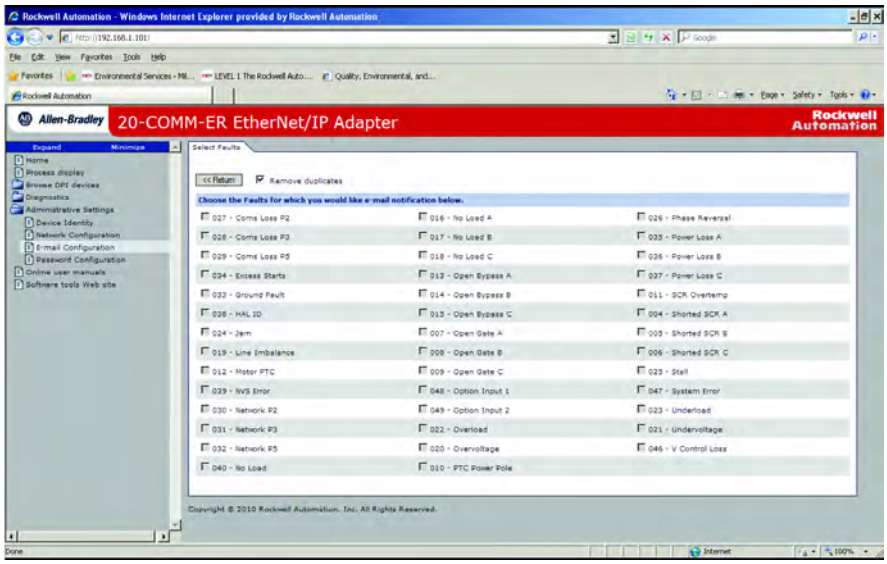

c. Click the desired fault/alarm check boxes.

d. Click **Apply Changes**.

e. Click the 'Back to E-mail Configuration Page' link.

2. Type the following information in their respective boxes.

Information	Description
'SMTP Server'	Type in the address of the mail server that will be used to deliver the email messages. (When the IP address is unknown, read the TIP shown below this table to determine the mail server address.)
'TO email recipient'	Type in addresses to where you want email messages to be sent. Multiple addresses can be used, but they must be separated by commas (comma delimited).
'Subject of e-mail message…'	Type in the desired subject text for the email message.

Figure 94 shows an example email message automatically sent by the adapter in response to selected events.

Figure 94 - Example of E-mail Message Sent by the Adapter

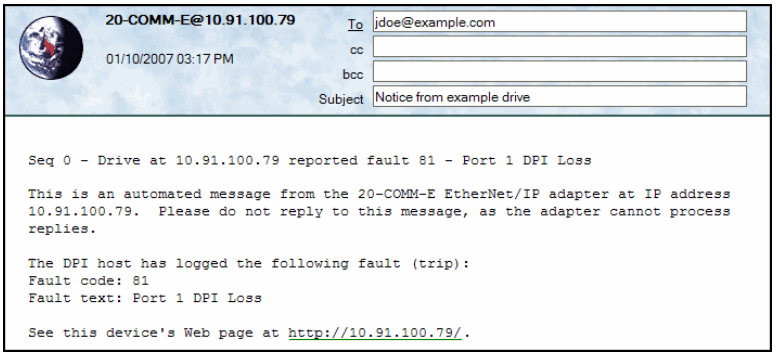

TIP To stop email messages, uncheck all of the 'Send an e-mail message when…' boxes.

Disabling the adapter web pages by setting the Web Pages Switch (SW2 in Figure 2) to the 'Disable Web' position will **not stop** the adapter from sending email messages.

Password Configuration

The Password Configuration Link allows the user to set or change a password. The factory default configuration is:

Username: Administrator

Password: <none> no password is set

Figure 95 - Password Configuration Page

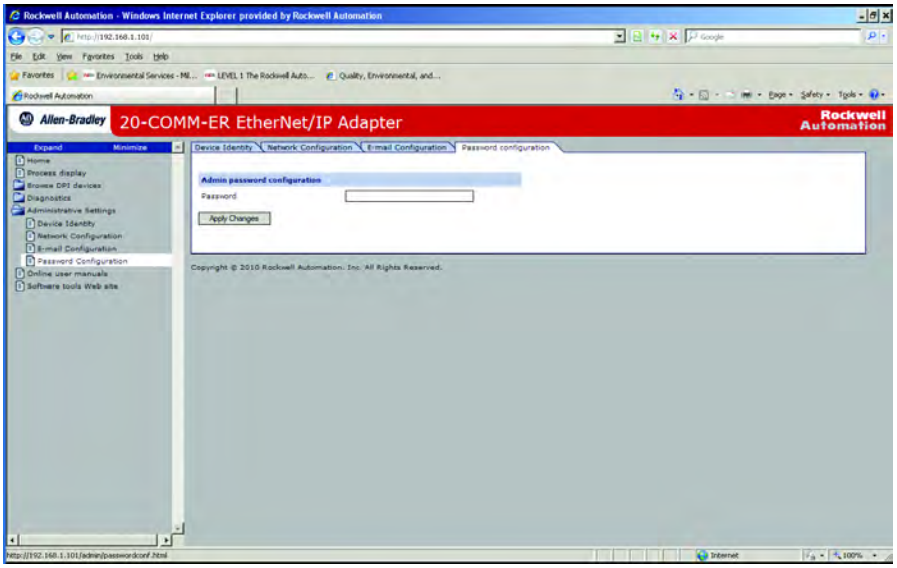

Notes:

Using the Adapter in a DPI External Comms Kit (20-XCOMM-DC-BASE)

This chapter provides information and examples that explain how to use the adapter in a DPI External Comms Kit (20-XCOMM-DC-BASE).

The adapter is typically installed in the internal communication slot on the PowerFlex 7-Class drive. However, an externally-mounted adapter may be desired when:

- The PowerFlex drive is already connected to an existing network, such as Remote I/O, and a second network is desired for a DriveExplorer or DriveExecutive software tool, data collection, and so forth.
- The PowerFlex drive is remotely located next to some I/O devices that also need to be networked. The DPI External Comms Kit has an option slot for general-purpose network I/O that a controller can use. Both the drive and I/O devices are handled as one node on the network to reduce the network node count.

Topic	Page
Installing the Adapter	167

Installing the Adapter

The adapter can be installed in a DPI External Comms Kit.

Figure 96 - Mounting and Connecting the Adapter

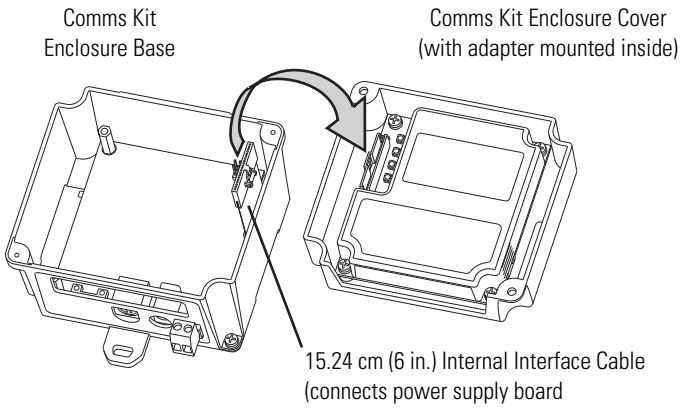

For more information, see the DPI External Communications Kit Installation Instructions, publication 20COMM-IN001.

Specifications

This appendix presents the specifications for the adapter.

Topic	Page
Communications	169
Electrical	169
Mechanical	170
Environmental	170
Regulatory Compliance	170

Communications

Network Protocol Data Rates	 EtherNet/IP 10 Mbps Full Duplex 10 Mbps Half Duplex 100 Mbps Full Duplex 100 Mbps Half Duplex
Connection Limits	30 TCP connections Two 'class 1' connections and 14 'class 3' connections are supported. The following activities use a CIP connection: • Explicit messaging where 'connected' is chosen (for example, in a checkbox in RSLogix 5000) The following activities **do not** use a CIP connection: • Explicit messaging-based control using PCCC or the Register or Assembly objects, including the PLC-5, SLC 500, and MicroLogix 1100 examples in Chapter 4 • Explicit messaging where 'connected' is **not** chosen, which is typically the default
Requested Packet Interval (RPI)	2 ms minimum
Drive Protocol Data Rates	 DPI 125 kbps or 500 kbps

Electrical

Consumption Drive Network	 482 mA at 5V DC supplied by the host (drive or DPI External Comms Kit) N/A

Mechanical

Dimensions	
Height	19 mm (0.75 inches)
Length	86 mm (3.39 inches)
Width	78.5 mm (3.09 inches)
Shipping Weight	150 g (5.2 oz.)

Environmental

Temperature	
Operating	-10…50 °C (14…122 °F)
Storage	-40…85 °C (-40…185 °F)
Relative Humidity	5…95% non-condensing
Atmosphere	**Important:** The adapter **must not** be installed in an area where the ambient atmosphere contains volatile or corrosive gas, vapors or dust. If the adapter is not going to be installed for a period of time, it must be stored in an area where it will not be exposed to a corrosive atmosphere.

Regulatory Compliance

Certification	Drive Specification	SMC Specification
UL	UL508C	UL508
cUL	CSA C22.2 No. 14-2010	CSA C22.2 No. 14-10
CE	EN61800-3	EN60947-4-2
CTick	EN61800-3	EN60947-4-2

NOTE: This is a product of category C2 according to IEC 61800-3. In a domestic environment this product may cause radio interference in which case supplementary mitigation measures may be required.

Adapter Parameters

This appendix provides information about the adapter parameters.

Topic	Page
About Parameter Numbers	171
Parameter List	171

About Parameter Numbers

The parameters in the adapter are numbered consecutively. However, depending on which configuration tool you use, they may have different numbers.

Configuration Tool	Numbering Scheme
• HIM • Connected Components Workbench software • DriveExplorer • DriveExecutive	The adapter parameters begin with parameter 01. For example, **Parameter 01 - [DPI Port]** is parameter 01 as indicated by this manual.
• Explicit Messaging	See Chapter 6, Using Explicit Messaging and Appendix C, EtherNet/IP Objects for details.

Parameter List

Parameter No.	Name and Description	Details
01	**[DPI Port]** Displays the port to which the adapter is connected. This will usually be port 5.	Default: 5 Minimum: 0 Maximum: 7 Type: Read Only
02	**[DPI Data Rate]** Displays the data rate used by the drive. This data rate is set in the drive and the adapter detects it.	Default: 0 = 125 kbps Values: 0 = 125 kbps 1 = 500 kbps Type: Read Only
03	**[BOOTP/DHCP]** Configures the adapter to use BOOTP so that you can set its IP address, subnet mask, and gateway address with a BOOTP server.	Default: 1 = Enabled Values: 0 = Disabled 1 = Enabled Type: Read/Write Reset Required: Yes

Parameter No.	Name and Description	Details
04 05 06 07	**[IP Addr Cfg 1]** **[IP Addr Cfg 2]** **[IP Addr Cfg 3]** **[IP Addr Cfg 4]** Sets the IP address bytes for the adapter's network address when **Parameter 03 - [BOOTP]** is set to '0' (Disabled). 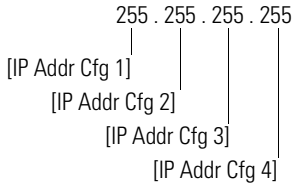	Default: 0 Default: 0 Default: 0 Default: 0 Minimum: 0 Maximum: 255 Type: Read/Write Reset Required: Yes
08 09 10 11	**[Subnet Cfg 1]** **[Subnet Cfg 2]** **[Subnet Cfg 3]** **[Subnet Cfg 4]** Sets the subnet mask bytes for the adapter's network address when **Parameter 03 - [BOOTP]** is set to '0' (Disabled). 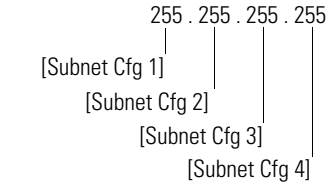	Default: 0 Default: 0 Default: 0 Default: 0 Minimum: 0 Maximum: 255 Type: Read/Write Reset Required: Yes
12 13 14 15	**[Gateway Cfg 1]** **[Gateway Cfg 2]** **[Gateway Cfg 3]** **[Gateway Cfg 4]** Sets the gateway address bytes for the adapter's network address when **Parameter 03 - [BOOTP]** is set to '0' (Disabled). 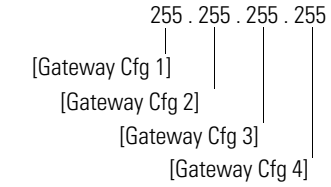	Default: 0 Default: 0 Default: 0 Default: 0 Minimum: 0 Maximum: 255 Type: Read/Write Reset Required: Yes
16	**[EN P1 Rate Cfg]** Sets the speed and duplex network data rate at which the adapter communicates. (Updates **Parameter 17 - [EN P1 Rate Act]** after a reset.)	Default: 0 = Autodetect Values: 0 = Autodetect 1 = 10 Mbps Full 2 = 10 Mbps Half 3 = 100 Mbps Full 4 = 100 Mbps Half Type: Read/Write Reset Required: Yes

Parameter No.	Name and Description	Details
17	**[EN P1 Rate Act]** Displays the actual speed and duplex network data rate used by the adapter.	Default: 0 = No Link Values: 0 = No Link 1 = 10 Mbps Full 2 = 10 Mbps Half 3 = 100 Mbps Full 4 = 100 Mbps Half Type: Read Only
18	**[EN P2 Rate Cfg]** Sets the speed and duplex network data rate at which the adapter communicates. (Updates **Parameter 19 - [EN PI Rate Act]** after a reset.)	Default: 0 = Autodetect Values: 0 = Autodetect 1 = 10 Mbps Full 2 = 10 Mbps Half 3 = 100 Mbps Full 4 = 100 Mbps Half Type: Read/Write Reset Required: Yes
19	**[EN P2 Rate Act]** Displays the actual speed and duplex network data rate used by the adapter.	Default: 0 = No Link Values: 0 = No Link 1 = 10 Mbps Full 2 = 10 Mbps Half 3 = 100 Mbps Full 4 = 100 Mbps Half Type: Read Only
20	**[Ref/Fdbk Size]** Displays the size of the Reference/Feedback. The drive determines the size of the Reference/ Feedback.	Default: 0 = 16-bit Values: 0 = 16-bit 1 = 32-bit Type: Read Only
21	**[Datalink Size]** Displays the size of each Datalink word. The drive determines the size of Datalinks.	Default: 0 = 16-bit Values: 0 = 16-bit 1 = 32-bit Type: Read Only
22	**[Reset Module]** No action if set to '0' (Ready). Resets the adapter if set to '1' (Reset Module). Restores the adapter to its factory default settings if set to '2' (Set Defaults). This parameter is a command. It will be reset to '0' (Ready) after the command has been performed.	Default: 0 = Ready Values: 0 = Ready 1 = Reset Module 2 = Set Defaults Type: Read/Write Reset Required: No

ATTENTION: Risk of injury or equipment damage exists. If the adapter is transmitting I/O that controls the drive, the drive may fault when you reset the adapter. Determine how your drive will respond before resetting a connected adapter.

Parameter No.	Name and Description	Details
23	**[Comm Flt Action]** Sets the action that the adapter and drive will take if the adapter detects that I/O communication has been disrupted. This setting is effective only if I/O that controls the drive is transmitted through the adapter. When communication is re-established, the drive will automatically receive commands over the network again.	Default: 0 = Fault Values: 0 = Fault 1 = Stop 2 = Zero Data 3 = Hold Last 4 = Send Flt Cfg Type: Read/Write Reset Required: No

ATTENTION: Risk of injury or equipment damage exists. **Parameter 23 - [Comm Flt Action]** lets you determine the action of the adapter and connected drive if I/O communication is disrupted. By default, this parameter faults the drive. You can set this parameter so that the drive continues to run, however, precautions should be taken to verify that the setting of this parameter does not create a risk of injury or equipment damage. When commissioning the drive, verify that your system responds correctly to various situations (for example, a disconnected cable).

Parameter No.	Name and Description	Details
24	**[Idle Flt Action]** Sets the action that the adapter and drive will take if the adapter detects that the controller is in program mode or faulted. This setting is effective only if I/O that controls the drive is transmitted through the adapter. When the controller is put back in Run mode, the drive will automatically receive commands over the network again.	Default: 0 = Fault Values: 0 = Fault 1 = Stop 2 = Zero Data 3 = Hold Last 4 = Send Flt Cfg Type: Read/Write Reset Required: No

ATTENTION: Risk of injury or equipment damage exists. **Parameter 24 - [Idle Flt Action]** lets you determine the action of the adapter and connected drive when the controller is idle. By default, this parameter faults the drive. You can set this parameter so that the drive continues to run, however, precautions should be taken to verify that the setting of this parameter does not create a risk of injury or equipment damage. When commissioning the drive, verify that your system responds correctly to various situations (for example, a faulted controller).

Parameter No.	Name and Description	Details
25	**[DPI I/O Cfg]** Sets the I/O that is transferred through the adapter.	Default: xxx0 0001 Bit Values: 0 = I/O Disabled 1 = I/O Enabled Type: Read/Write Reset Required: Yes

Bit Definition	Not Used	Not Used	Not Used	Datalink D	Datalink C	Datalink B	Datalink A	Cmd/Ref
Default	x	x	x	0	0	0	0	1
Bit	7	6	5	4	3	2	1	0

Parameter No.	Name and Description	Details
26	**[DPI I/O Act]** Displays the I/O that the adapter is actively transmitting. The value of this parameter will usually be equal to the value of **Parameter 25 - [DPI I/O Cfg]**.	Default: xxx0 0001 Bit Values: 0 = I/O Disabled 1 = I/O Enabled Type: Read Only Bit Definition: Not Used, Not Used, Not Used, Datalink D, Datalink C, Datalink B, Datalink A, Cmd/Ref Default: x, x, x, 0, 0, 0, 0, 1 Bit: 7, 6, 5, 4, 3, 2, 1, 0
27	**[Flt Cfg Logic]** Sets the Logic Command data that is sent to the drive if any of the following is true: • **Parameter 23 - [Comm Flt Action]** is set to '4' (Send Flt Cfg) and I/O communication is disrupted. • **Parameter 24 - [Idle Flt Action]** is set to '4' (Send Flt Cfg) and the controller is idle. • **Parameter 43 - [Peer Flt Action]** is set to '4' (Send Flt Cfg) and peer I/O communication is disrupted. The bit definitions will depend on the product to which the adapter is connected. See Appendix D or the documentation for the drive being used.	Default: 0000 0000 0000 0000 Minimum: 0000 0000 0000 0000 Maximum: 1111 1111 1111 1111 Type: Read/Write Reset Required: No
28	**[Flt Cfg Ref]** Sets the Reference data that is sent to the drive if any of the following is true: • **Parameter 23 - [Comm Flt Action]** is set to '4' (Send Flt Cfg) and I/O communication is disrupted. • **Parameter 24 - [Idle Flt Action]** is set to '4' (Send Flt Cfg) and the controller is idle. • **Parameter 43- [Peer Flt Action]** is set to '4' (Send Flt Cfg) and peer I/O communication is disrupted.	Default: 0 Minimum: 0 Maximum: 4294967295 Type: Read/Write Reset Required: No **Important:** If the drive uses a 16-bit Reference, the most significant word of this value must be set to zero (0) or a fault will occur.

Parameter No.	Name and Description	Details
29 30 31 32 33 34 35 36	**[Flt Cfg A1 In]** **[Flt Cfg A2 In]** **[Flt Cfg B1 In]** **[Flt Cfg B2 In]** **[Flt Cfg C1 In]** **[Flt Cfg C2 In]** **[Flt Cfg D1 In]** **[Flt Cfg D2 In]** Sets the data that is sent to the Datalink in the drive if any of the following is true: • **Parameter 23 - [Comm Flt Action]** is set to '4' (Send Flt Cfg) and I/O communication is disrupted. • **Parameter 24 - [Idle Flt Action]** is set to '4' (Send Flt Cfg) and the controller is idle. • **Parameter 43 - [Peer Flt Action]** is set to '4' (Send Flt Cfg) and peer I/O communication is disrupted.	Default: 0 Default: 0 Default: 0 Default: 0 Default: 0 Default: 0 Default: 0 Default: 0 Minimum: 0 Maximum: 4294967295 Type: Read/Write Reset Required: No **Important:** If the drive uses 16-bit Datalinks, the most significant word of this value must be set to zero (0) or a fault will occur.
37	**[M-S Input]** Sets the Master-Slave input data. This data is produced by the scanner and consumed by the adapter.	Default: xxx0 0001 Bit Values: 0 = I/O disabled 1 = I/O enabled Type: Read/Write Reset Required: Yes

Bit Definition	Not Used	Not Used	Not Used	Datalink D Input	Datalink C Input	Datalink B Input	Datalink A Input	Cmd/Ref
Default	x	x	x	0	0	0	0	1
Bit	7	6	5	4	3	2	1	0

38	**[M-S Output]** Sets the Master-Slave output data. This data is produced by the adapter and consumed by the Master device (for example, scanner).	Default: xxx0 0001 Bit Values: 0 = I/O disabled 1 = I/O enabled Type: Read/Write Reset Required: Yes

Bit Definition	Not Used	Not Used	Not Used	Datalink D Output	Datalink C Output	Datalink B Output	Datalink A Output	Cmd/Ref
Default	x	x	x	0	0	0	0	1
Bit	7	6	5	4	3	2	1	0

39	**[Ref Adjust]** Sets the percent scale factor for the Reference received from the network.	Default: 100.00% Minimum: 0.00% Maximum: 200.00% Type: Read/Write Reset Required: No

ATTENTION: To guard against equipment damage and/or personal injury, note that changes to **Parameter 39 - [Ref Adjust]** take effect immediately. A drive receiving its Reference from the adapter will receive the newly scaled Reference, resulting in a change of speed.

Parameter No.	Name and Description	Details
40 41	**[Peer A Input]** **[Peer B Input]** Sets the destination of the peer I/O input. The adapter receives this data from the network and sends it to the drive. **Important:** Changes to these parameters are ignored when **Parameter 49 - [Peer Inp Enable]** is set to '1' (On). **Important:** If the parameter is set to input a Logic Command, configure the mask in **Parameter 42 - [Peer Cmd Mask]** so that the desired bits from the peer device are used.	Default: 0 = Off Default: 0 = Off Values: 0 = Off 1 = Cmd/Ref 2 = Datalink A Input 3 = Datalink B Input 4 = Datalink C Input 5 = Datalink D Input Type: Read/Write Reset Required: No
42	**[Peer Cmd Mask]** Sets the mask for the Logic Command word when it is received through peer input. If the mask bit is '0' (Off), the command bit is ignored and not used. If the mask bit is '1' (On), the command bit is checked and used. **Important:** If the adapter receives a Logic Command from both a Master device and a peer device, each command bit must have only one source. The source of command bits set to '0' will be the Master device. The source of command bits set to '1' will be the peer device.	Default: 0000 0000 0000 0000 Minimum: 0000 0000 0000 0000 Maximum: 1111 1111 1111 1111 Values: 0 = Ignore bit 1 = Check bit Type: Read/Write Reset Required: Yes
43	**[Peer Flt Action]** Sets the action that the adapter and drive will take if the adapter detects that peer I/O communication has been disrupted. This setting is effective only if I/O is transmitted through the adapter.	Default: 0 = Fault Values: 0 = Fault 1 = Stop 2 = Zero Data 3 = Hold Last 4 = Send Flt Cfg Type: Read/Write Reset Required: No

ATTENTION: Risk of injury or equipment damage exists. **Parameter 43 - [Peer Flt Action]** lets you determine the action of the adapter and connected drive if the adapter is unable to communicate with the designated peer. By default, this parameter faults the drive. You can set this parameter so that the drive continues to run, however, precautions should be taken to verify that the setting of this parameter does not create a risk of injury or equipment damage. When commissioning the drive, verify that your system responds correctly to various situations (for example, a disconnected cable).

Parameter No.	Name and Description	Details
44 45 46 47	**[Peer Inp Addr 1]** **[Peer Inp Addr 2]** **[Peer Inp Addr 3]** **[Peer Inp Addr 4]** Sets the IP address bytes that specifies the device from which the adapter receives (consumes) peer I/O data. 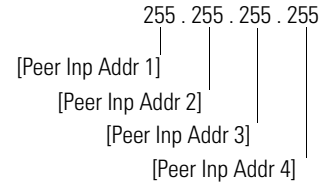 **Important:** The Peer Inp Addr must be on the same subnet as the 20-COMM-ER. See page 226 for more information. Changes to these parameters are ignored when **Parameter 49 - [Peer Inp Enable]** is set to '1' (On).	Default: 0 Default: 0 Default: 0 Default: 0 Minimum: 0 Maximum: 255 Type: Read/Write Reset Required: No
48	**[Peer Inp Timeout]** Sets the timeout for a peer I/O connection. If the time is reached without the adapter receiving (consuming) a message, the adapter will respond with the action specified in **Parameter 43 - [Peer Flt Action]**. In an adapter receiving (consuming) peer I/O, the value of this parameter must be greater than the product of the value of **Parameter 54 - [Peer Out Time]** in the adapter transmitting (producing) peer I/O multiplied by the value of **Parameter 55 - [Peer Out Skip]** in the adapter transmitting (producing) peer I/O.	Default: 10.00 Seconds Minimum: 0.01 Seconds Maximum: 10.00 Seconds Type: Read/Write Reset Required: No
49	**[Peer Inp Enable]** Determines if peer I/O input is on or off.	Default: 0 = Off Values: 0 = Off 1 = On Type: Read/Write Reset Required: No
50	**[Peer Inp Status]** Displays the status of the consumed peer I/O input connection.	Default: 0 = Off Values: 0 = Off 1 = Waiting 2 = Running 3 = Faulted Type: Read Only

Parameter No.	Name and Description	Details
51 52	**[Peer A Output]** **[Peer B Output]** Selects the source of the peer I/O output data. The adapter transmits this data to the network. **Important:** Changes to these parameters are ignored when **Parameter 53 - [Peer Out Enable]** is set to '1' (On).	Default: 0 = Off Default: 0 = Off Values: 0 = Off 1 = Cmd/Ref 2 = Datalink A Input 3 = Datalink B Input 4 = Datalink C Input 5 = Datalink D Input 6 = Datalink A Output 7 = Datalink B Output 8 = Datalink C Output 9 = Datalink D Output Type: Read/Write Reset Required: No
53	**[Peer Out Enable]** Determines if peer I/O output is on or off.	Default: 0 = Off Values: 0 = Off 1 = On Type: Read/Write Reset Required: No
54	**[Peer Out Time]** Sets the minimum time that an adapter will wait when transmitting data to a peer. **Important:** Changes to these parameters are ignored when **Parameter 53 - [Peer Out Enable]** is set to '1' (On).	Default: 10.00 Seconds Minimum: 0.01 Seconds Maximum: 10.00 Seconds Type: Read/Write Reset Required: No
55	**[Peer Out Skip]** Sets the maximum time that an adapter will wait when transmitting data to a peer. The value of **Parameter 54 - [Peer Out Time]** is multiplied by the value of this parameter to set the time. **Important:** Changes to these parameters are ignored when **Parameter 53 - [Peer Out Enable]** is set to '1' (On).	Default: 1 Minimum: 1 Maximum: 16 Type: Read/Write Reset Required: No
56	**[Web Enable]** Displays the setting of the adapter Web Pages Switch (SW2) when the adapter was last reset.	Default: 0 = Disabled Values: 0 = Disabled 1 = Enabled Type: Read Only
57	**[Web Features]** Sets the access to the Web interface and Web configurable email notification feature.	Default: xxxx xxx0 Bit Values: 0 = Disabled 1 = Enabled Type: Read/Write Reset Required: No

Bit Definition	Not Used	Not Used	Not Used	Not Used	Not Used	Not Used	Not Used	E-mail Cfg
Default	x	x	x	x	x	x	x	1
Bit	7	6	5	4	3	2	1	0

Notes:

EtherNet/IP Objects

This appendix presents information about the EtherNet/IP objects that can be accessed using Explicit Messages. For information on the format of Explicit Messages and example ladder logic programs, refer to Chapter 6, Using Explicit Messaging.

Object	Class Code		Page
	Hex.	Dec.	
Identity Object	0x01	1	182
Assembly Object	0x04	4	183
Register Object	0x07	7	184
Parameter Object	0x0F	15	185
Parameter Group Object	0x10	16	188
Device Level Ring Object	0x47	71	189
Quality of Service Object	0x48	72	190
PCCC Object	0x67	103	190

Object	Class Code		Page
	Hex.	Dec.	
DPI Device Object	0x92	146	196
DPI Parameter Object	0x93	147	198
DPI Fault Object	0x97	151	204
DPI Alarm Object	0x98	152	206
DPI Diagnostic Object	0x99	153	207
DPI Time Object	0x9B	155	209
TCP/IP Interface Object	0xF5	245	211
Ethernet Link Object	0xF6	246	213

TIP See the EtherNet/IP specification for more information about EtherNet/IP objects. Information about the EtherNet/IP specification is available on the ODVA web site (http://www.odva.org).

Supported Data Types

Data Type	Description
BOOL	8-bit value -- low bit is true or false
BOOL[n]	Array of n bits
BYTE	8-bit unsigned integer
CONTAINER	32-bit parameter value - sign extended if necessary
DINT	32-bit signed integer
DWORD	32-bit unsigned integer
INT	16-bit signed integer
LWORD	64-bit unsigned integer
REAL	32-bit floating point
SHORT_STRING	1-byte length indicator + that many characters
SINT	8-bit signed integer
STRING[n]	Array of n characters
STRUCT	Structure name only - no size in addition to elements
TCHAR	8 or 16-bit character
UDINT	32-bit unsigned integer
UINT	16-bit unsigned integer
USINT	8-bit unsigned integer
WORD	16-bit unsigned integer

Identity Object

Class Code

Hexadecimal	Decimal
0x01	1

Services

	Implemented for:		
Service Code	Class	Instance	Service Name
0x05	No	Yes	Reset
0x0E	Yes	Yes	Get_Attribute_Single
0x01	Yes	Yes	Get_Attributes_All

Instances

The number of instances depends on the number of components in the device connected to the adapter. This number of components can be read in Instance 0, Attribute 2.

Instance	Description
0	Class
1	Host
2…15	Peripherals on Ports 1…14

Class Attributes

Attribute ID	Access Rule	Name	Data Type	Description
2	Get	Max Instance	WORD	Total number of instances

Instance Attributes

Attribute ID	Access Rule	Name	Data Type	Description
1	Get	Vendor ID	WORD	1 = Allen-Bradley
2	Get	Device Type	WORD	123
3	Get	Product Code	WORD	Number identifying product name and rating
4	Get	Revision: Major Minor	STRUCT of: BYTE BYTE	 Value varies Value varies
5	Get	Status	WORD	Bit 0 = Owned Bit 8 = Minor recoverable fault Bit 10 = Major recoverable fault
6	Get	Serial Number	DWORD	Unique 32-bit number
7	Get	Product Name	SHORT_STRING	Product name and rating
8	Get	State	USINT	Always returns 3 (Operational)
9	Get	Configuration Consistency Value	UINT	For the Host (Instance #1) the CCV is determined from the Host's NVS Checksum along with 20-COMM-ER's NVS Checksum. For DPI Peripherals (Instances 2-15) the CCV is from the peripheral's NVS Checksum only.

Assembly Object

Class Code

Hexadecimal	Decimal
0x04	4

Services

	Implemented for:		
Service Code	Class	Instance	Service Name
0x0E	Yes	Yes	Get_Attribute_Single
0x10	Yes	Yes	Set_Attribute_Single

Instances

Instance	Description
1	All I/O data being read from the DPI device (read-only)
2	All I/O data written to the DPI device (read/write)
191	Input only
192	Listen only

Class Attributes

Attribute ID	Access Rule	Name	Data Type	Description
1	Get	Revision	WORD	2
2	Get	Max Instance	WORD	2
100	Set	Control Timeout	WORD	Control timeout in seconds

Instance Attributes

Attribute ID	Access Rule	Name	Data Type	Description
1	Get	Number of Members	WORD	1
2	Get	Member List	ARRAY of STRUCT: WORD WORD Packed EPATH	 Size of member data Size of member path Member path
3	Conditional [1]	Data	Array of Bits	Data to be transferred
4	Get	Size	WORD	Size of assembly data in bits

(1) For instance 1, access rule for the data attribute is Get. For instance 2, it is Get/Set.

Important: Setting an assembly object attribute can be done only when the Control Timeout (class attribute 100) has been set to a non-zero value.

Register Object

Class Code

Hexadecimal	Decimal
0x07	7

Services

Service Code	Implemented for:		Service Name
	Class	Instance	
0x0E	Yes	Yes	Get_Attribute_Single
0x10	Yes	Yes	Set_Attribute_Single

Instances

Instance	Description
1	All I/O data being read from the DPI device (read-only)
2	All I/O data written to the DPI device (read/write)
3	Logic Status and Feedback data (read-only)
4	Logic Command and Reference data (read/write)
5	Datalink A (input data from device to scanner) (read only)
6	Datalink A (output data from scanner to device) (read/write)
7	Datalink B (input data from device to scanner) (read only)
8	Datalink B (output data from scanner to device) (read/write)
9	Datalink C (input data from device to scanner) (read only)
10	Datalink C (output data from scanner to device) (read/write)
11	Datalink D (input data from device to scanner) (read only)
12	Datalink D (output data from scanner to device) (read/write)
13	Logic Status and Feedback Data (read-only)
14	Mask [1] (read/write)
15	Logic Status (read-only)
16	Logic Command (read/write)
17	Feedback (read-only)
18	Reference (read/write)

(1) The mask command word is set to the value of the first word of the data where there are ones in the second word of the data. Command = (word 1 and not word 2) or (word 1 and word 2). This only controls specified bits in the Logic Command data to the DPI product and does not change the Reference value.

Class Attributes

Attribute ID	Access Rule	Name	Data Type	Description
100	Set	Control Timeout	WORD	Control timeout in seconds

Instance Attributes

Attribute ID	Access Rule	Name	Data Type	Description
1	Get	Bad Flag	BOOL	If set to 1, then attribute 4 may contain invalid data. 0 = good 1 = bad
2	Get	Direction	BOOL	Direction of data transfer 0 = Producer Register (drive to network) 1 = Consumer Register (network to drive)
3	Get	Size	WORD	Size of register data in bits
4	Conditional (1)	Data	ARRAY of BITS	Data to be transferred

(1) For this attribute, the Access Rule is Get if Direction = 0. The Access Rule is Set if Direction = 1.

Important: Setting a Register object attribute can be done only when the Control Timeout (class attribute 100) has been set to a non-zero value.

Parameter Object

Class Code

Hexadecimal	Decimal
0x0F	15

Services

Service Code	Implemented for:		Service Name
	Class	Instance	
0x01	Yes	Yes	Get_Attributes_All
0x05	Yes	No	Reset
0x0E	Yes	Yes	Get_Attribute_Single
0x10	Yes	Yes	Set_Attribute_Single
0x4B	No	Yes	Get_Enum_String

Instances

The number of instances depends on the number of parameters in the DPI drive. The adapter parameters are appended to the list of drive parameters. The total number of parameters can be read in Instance 0, Attribute 2.

Instance	Description
0	Class Attributes
1	Drive Parameter 1 Attributes
⋮	⋮
n	Last Drive Parameter n Attributes (1)
n + 1	Adapter Parameter 1 Attributes
⋮	⋮
n + m	Last Adapter Parameter m Attributes (2)

(1) n represents the number of parameters in the drive.

(2) m represents the number of parameters in the adapter.

Class Attributes

Attribute ID	Access Rule	Name	Data Type	Description
1	Get	Revision	WORD	1
2	Get	Max Instance	WORD	Number of parameters
8	Get	Parameter Class Descriptor	WORD	0 = False, 1 = True Bit 0 = Supports parameter instances Bit 1 = Supports full attributes Bit 2 = Must do NVS save command Bit 3 = Parameters are stored in NVS
9	Get	Configuration Assembly Instance	WORD	0
10	Set	Native Language	BYTE	0 = English 1 = French 2 = Spanish 3 = Italian 4 = German 5 = Japanese 6 = Portuguese 7 = Mandarin Chinese 8 = Russian 9 = Dutch

Instance Attributes

Attribute ID	Access Rule	Name	Data Type	Description
1	(1)	Parameter Value	(2)	(3)
2	Get	Link Path Size	BYTE	0 = No link specified n = The size of Attribute 3 in bytes
3	Get	Link Path		(4)
4	Get	Descriptor	WORD	0 = False, 1 = True Bit 1 = Supports ENUMs Bit 2 = Supports scaling Bit 3 = Supports scaling links Bit 4 = Read only Bit 5 = Monitor Bit 6 = Extended precision scaling
5	Get	Data Type	BYTE	1 = WORD (16-bit) 2 = UINT (16-bit) 3 = INT (16-bit) 5 = SINT 6 = DINT 8 = USINT 9 = UDINT 11 = REAL 22 = SHORT_STRING 24 = BYTE 25 = DWORD
6	Get	Data Size	BYTE	(3)
7	Get	Parameter Name String	SHORT_STRING	(3)
8	Get	Units String	SHORT_STRING	(3)
9	Get	Help String	SHORT_STRING	Null string
10	Get	Minimum Value	(2)	(3)
11	Get	Maximum Value	(2)	(3)
12	Get	Default Value	(2)	(3)
13	Get	Scaling Multiplier	WORD	(3)
14	Get	Scaling Divisor	WORD	(3)
15	Get	Scaling Base	WORD	(3)
16	Get	Scaling Offset	WORD	(3)
17	Get	Multiplier Link	WORD	(3)
18	Get	Divisor Link	WORD	(3)
19	Get	Base Link	WORD	(3)
20	Get	Offset Link	WORD	(3)
21	Get	Decimal Precision	BYTE	(3)

(1) Access rule is defined in Bit 4 of instance attribute 4 (0 = Get/Set, 1 = Get).

(2) Specified in descriptor, data type, and data size.

(3) Value varies based on parameter instance.

(4) See the EtherNet/IP specification for a description of the link path.

Parameter Group Object

Class Code

Hexadecimal	Decimal
0x10	16

Services

Service Code	Implemented for:		Service Name
	Class	Instance	
0x0E	Yes	Yes	Get_Attribute_Single
0x10	Yes	No	Set_Attribute_Single

Instances

The number of instances depends on the number of groups in the device. A group of adapter parameters is appended to the list of groups in the device. The total number of groups can be read in Instance 0, Attribute 2.

Number	Description
0	Class Attributes
1	Drive Group 1 Attributes
⋮	⋮
n	Last Drive Group Attributes
n + 1	Adapter Group Attributes

Class Attributes

Attribute ID	Access Rule	Name	Data Type	Description
1	Get	Parameter group version	WORD	1
2	Get	Max Instance	WORD	Total number of groups
8	Set	Native Language	BYTE	0 = English 1 = French 2 = Spanish 3 = Italian 4 = German 5 = Japanese 6 = Portuguese 7 = Mandarin Chinese 8 = Russian 9 = Dutch

Instance Attributes

Attribute ID	Access Rule	Name	Data Type	Description
1	Get	Group Name String	SHORT_STRING	Group name
2	Get	Number of Members in Group	WORD	Number of parameters in group
3	Get	1st Parameter Number in Group	WORD	(1)
4	Get	2nd Parameter Number in Group	WORD	(1)
n	Get	⋮	WORD	(1)

(1) Value varies based on group instance.

Device Level Ring Object

Class Code

Hexadecimal	Decimal
0x0047	71

Services

The following common services will be implemented for the DLR Object.

Service Code	Implemented for:		Service Name
	Class	Instance	
0x01	No	Yes	Get_Attributes_All
0x0E	Yes	Yes	Get_Attribute_Single

Instances

Get_Attribute_ALL is implemented for instances and Get_Attribute_Single for both class and instance.

The adapter supports one instance of the TCP/IP Interface object.

Number	Description
0	Class Attributes
1	Object Attributes

Class Attributes

The following class attributes will be supported for the DLR Object:

Attribute ID	Access Rule	Name	Data Type	Description
1	Get	Revision	UNIT	2

Instance Attributes

A single instance (instance 1) will be supported.

Attribute ID	Access Rule	Name	Data Type	Description
1	Get	Network Topology	USINT	0 = Linear 1 = Ring
2	Get	Network Status	USINT	0 = Normal 1 = Ring Fault 2 = Unexpected Loop Detect 3 = Partial Network Fault 4 = Rapid Fault/Restore Cycle
10	Get	Active Supervisor Address	STRUCT of: UDINT Array of 6 USINT	Ring supervisor
12	Get	Capability Flags	DWORD	0x00000002

Quality of Service Object

Class Code

Hexadecimal	Decimal
0x0048	72

Services

Service Code	Implemented for:		Service Name
	Class	Instance	
0x0E	Yes	Yes	Get_Attribute_Single
0x10	No	Yes	Set_Attribute_Single

Instances

Get_Attribute_Single is implemented on both class and instance. Set_Attribute_Single is implemented on instances. Get_Attribute_All is not implemented

The adapter supports one instance of the TCP/IP Interface object.

Number	Description
0	Class Attributes
1	Object Attributes

Class Attributes

Attribute ID	Access Rule	Name	Data Type	Value
1	Get	Revision	UINT	1

Instance Attributes

Attribute ID	Access Rule	Name	Data Type	Description
1	Set	802.1Q Tag Enable	USINT	0 = Disable (default) 1 = Enable
4	Set	DSCP Urgent	USINT	Default = 55
5	Set	DSCP Scheduled	USINT	Default = 47
6	Set	DSCP High	USINT	Default = 43
7	Set	DSCP Low	USINT	Default = 31
8	Set	DSCP Explici	USINT	Default = 27

PCCC Object

Class Code

Hexadecimal	Decimal
0x67	103

Services

Service Code	Implemented for:		Service Name
	Class	Instance	
0x4B	No	Yes	Execute_PCCC
0x4C	No	Yes	Execute_DH+

Instances

Supports Instance 1.

Class Attributes

Not supported.

Instance Attributes

Not supported.

Message Structure for Execute_PCCC

Request		
Name	**Data Type**	**Description**
Length	USINT	Length of requestor ID
Vendor	UINT	Vendor number of requestor
Serial Number	UDINT	ASA serial number of requestor
Other	Product Specific	Identifier of user, task, etc. on the requestor
CMD	USINT	Command byte
STS	USINT	0
TNSW	UINT	Transport word
FNC	USINT	Function code; not used for all CMDs.
PCCC_ params	ARRAY of USINT	CMD/FNC specific parameters

Response		
Name	**Data Type**	**Description**
Length	USINT	Length of requestor ID
Vendor	UINT	Vendor number of requestor
Serial Number	UDINT	ASA serial number of requestor
Other	Product Specific	Identifier of user, task, etc. on the requestor
CMD	USINT	Command byte
STS	USINT	Status byte
TNSW	UINT	Transport word. Same value as the request.
EXT_STS	USINT	Extended status; not used for all CMDs.
PCCC_ results	ARRAY of USINT	CMD/FNC specific result data

Message Structure for Execute_DH+

Request		
Name	**Data Type**	**Description**
DLink	UINT	Destination Link ID
DSta	USINT	Destination Station number
DUser	USINT	Destination “User” number
SLink	UINT	Source Link ID
SSta	USINT	Source Station number
SUser	USINT	Source User number
CMD	USINT	Command byte
STS	USINT	0
TNSW	UINT	Transport word
FNC	USINT	Function code; not used for all CMDs
PCCC_ params	ARRAY of USINT	CMD/FNC specific parameters

Response		
Name	**Data Type**	**Description**
DLink	UINT	Destination Link ID
DSta	USINT	Destination Station number
DUser	USINT	Destination “User” number
SLink	UINT	Source Link ID
SSta	USINT	Source Station number
SUser	USINT	Source User number
CMD	USINT	Command byte
STS	USINT	Status byte
TNSW	UINT	Transport word. Same value as the request.
EXT_STS	USINT	Extended status; not used for all CMDs
PCCC_ results	ARRAY of USINT	CMD/FNC specific result data

The adapter supports the following PCCC command types:

CMD	FNC	Description
0x06	0x03	Identify host and some status
0x0F	0x67	PLC-5 typed write
0x0F	0x68	PLC-5 typed read
0x0F	0x95	Encapsulate other protocol
0x0F	0xA2	SLC 500 protected typed read with 3 address fields
0x0F	0xAA	SLC 500 protected typed write with 3 address fields
0x0F	0xA1	SLC 500 protected typed read with 2 address fields
0x0F	0xA9	SLC 500 protected typed write with 2 address fields
0x0F	0x00	Word range read
0x0F	0x01	Word range write

For more information regarding PCCC commands, see DF1 Protocol and Command Set Manual, publication 1770-6.5.16.

N-Files

<table>
<tr><th>N-File</th><th colspan="4">Description</th></tr>
<tr><td>N40</td><td colspan="4">This N-file lets you use Emulated Block Transfer messages to read and write many types of DPI messages. To use Emulated Block Transfer messages, you send a Write message to N40:0…N40:63, wait until the adapter responds with a reply message, and then read the response data in N40:0…N40:63 with a Read message.

For details about Block Transfer messages and the data required for each byte in the N-File, see the Remote I/O Adapter User Manual, publication 20COMM-UM004.

Bits 15…8 are the Most Significant Byte. Bits 7…0 are the Least Significant Byte.</td></tr>
<tr><td></td><td colspan="2">Write</td><td colspan="2">Read</td></tr>
<tr><td>Bits</td><td>15</td><td>0</td><td>15</td><td>0</td></tr>
<tr><td>N40:0</td><td>0x00</td><td>Length (in Bytes)</td><td>0x00</td><td>Length (in Bytes)</td></tr>
<tr><td>N40:1</td><td>DPI Port</td><td>0x81</td><td>Status Size</td><td>Status Type</td></tr>
<tr><td>N40:2</td><td>0x00</td><td>CIP Service</td><td colspan="2" rowspan="5">Data
(length varies based on message)</td></tr>
<tr><td>N40:3</td><td colspan="2">CIP Class</td></tr>
<tr><td>N40:4</td><td colspan="2">CIP Instance</td></tr>
<tr><td>N40:5</td><td colspan="2">CIP Attribute</td></tr>
<tr><td>N40:6
⋮
N40:63</td><td colspan="2">Data
(length varies based on message)</td></tr>
<tr><td>N41</td><td colspan="4">This N-file lets you read and write control I/O messages. You can write control I/O messages only when all of the following conditions are true:
The adapter is not receiving I/O from a scanner. For example, there is no scanner on the network, the scanner is in idle (program) mode, the scanner is faulted, or the adapter is not mapped to the scanner.
The adapter is not receiving peer I/O from another adapter.
The value of N42:3 is set to a non-zero value.</td></tr>
<tr><td></td><td colspan="2">Write</td><td colspan="2">Read</td></tr>
</table>

N-File	Description	
N41:0	Logic Command Word	Logic Status Word
N41:1	Reference (least significant word)	Feedback (least significant word)
N41:2	Reference (most significant word)	Feedback (most significant word)
N41:3	Datalink A1 (least significant word)	Datalink A1 (least significant word)
N41:4	Datalink A1 (most significant word)	Datalink A1 (most significant word)
N41:5	Datalink A2 (least significant word)	Datalink A2 (least significant word)
N41:6	Datalink A2 (most significant word)	Datalink A2 (most significant word)
N41:7	Datalink B1 (least significant word)	Datalink B1 (least significant word)
N41:8	Datalink B1 (most significant word)	Datalink B1 (most significant word)
N41:9	Datalink B2 (least significant word)	Datalink B2 (least significant word)
N41:10	Datalink B2 (most significant word)	Datalink B2 (most significant word)
N41:11	Datalink C1 (least significant word)	Datalink C1 (least significant word)
N41:12	Datalink C1 (most significant word)	Datalink C1 (most significant word)
N41:13	Datalink C2 (least significant word)	Datalink C2 (least significant word)
N41:14	Datalink C2 (most significant word)	Datalink C2 (most significant word)
N41:15	Datalink D1 (least significant word)	Datalink D1 (least significant word)
N41:16	Datalink D1 (most significant word)	Datalink D1 (most significant word)
N41:17	Datalink D2 (least significant word)	Datalink D2 (least significant word)
N41:18	Datalink D2 (most significant word)	Datalink D2 (most significant word)
N42	This N-file lets you read and write some values configuring the port.	
N42:3	Time-out (read/write): Time (in seconds) allowed between messages to the N41 file. If the adapter does not receive a message in the specified time, it performs the fault action configured in its [Comm Flt Action] parameter. A valid setting is between 1 and 32767 seconds (5. . . 20 seconds is recommended).	
N42:7	Adapter Port Number (read only): DPI port on the drive to which the adapter is connected.	
N42:8	Peer Adapters (read only): Bit field of devices having DPI Peer capabilities.	

N45	This N-file lets you read and write control I/O messages. You can write control I/O messages only when all of the following conditions are true: The adapter is not receiving I/O from a scanner. For example, there is no scanner on the network, the scanner is in idle (program) mode, the scanner is faulted, or the adapter is not mapped to the scanner. The adapter is not receiving peer I/O from another adapter. The value of N42:3 is set to a non-zero value.	
	Write	*Read*
N45:0	Logic Command (least significant)	Logic Status (least significant)
N45:1	Logic Command (most significant)	Logic Status (most significant)
N45:2	Reference (least significant)	Feedback (least significant)
N45:3	Reference (most significant)	Feedback (most significant)
N45:4	DL From Net 01 (least significant)	DL To Net 01 (least significant)
N45:5	DL From Net 01 (most significant)	DL To Net 01 (most significant)
N45:6	DL From Net 02 (least significant)	DL To Net 02 (least significant)
N45:7	DL From Net 02 (most significant)	DL To Net 02 (most significant)
N45:8	DL From Net 03 (least significant)	DL To Net 03 (least significant)
N45:9	DL From Net 03 (most significant)	DL To Net 03 (most significant)
N45:10	DL From Net 04 (least significant)	DL To Net 04 (least significant)
N45:11	DL From Net 04 (most significant)	DL To Net 04 (most significant)
N45:12	DL From Net 05 (least significant)	DL To Net 05 (least significant)
N45:13	DL From Net 05 (most significant)	DL To Net 05 (most significant)
N45:14	DL From Net 06 (least significant)	DL To Net 06 (least significant)
N45:15	DL From Net 06 (most significant)	DL To Net 06 (most significant)
N45:16	DL From Net 07 (least significant)	DL To Net 07 (least significant)
N45:17	DL From Net 07 (most significant)	DL To Net 07 (most significant)
N45:18	DL From Net 08 (least significant)	DL To Net 08 (least significant)
N45:19	DL From Net 08 (most significant)	DL To Net 08 (most significant)
N45:20	DL From Net 09 (least significant)	DL To Net 09 (least significant)
N45:21	DL From Net 09 (most significant)	DL To Net 09 (most significant)
N45:22	DL From Net 10 (least significant)	DL To Net 10 (least significant)
N45:23	DL From Net 10 (most significant)	DL To Net 10 (most significant)
N45:24	DL From Net 11 (least significant)	DL To Net 11 (least significant)
N45:25	DL From Net 11 (most significant)	DL To Net 11 (most significant)
N45:26	DL From Net 12 (least significant)	DL To Net 12 (least significant)
N45:27	DL From Net 12 (most significant)	DL To Net 12 (most significant)
N45:28	DL From Net 13 (least significant)	DL To Net 13 (least significant)
N45:29	DL From Net 13 (most significant)	DL To Net 13 (most significant)
N45:30	DL From Net 14 (least significant)	DL To Net 14 (least significant)
N45:31	DL From Net 14 (most significant)	DL To Net 14 (most significant)
N45:32	DL From Net 15 (least significant)	DL To Net 15 (least significant)
N45:33	DL From Net 15 (most significant)	DL To Net 15 (most significant)
N45:34	DL From Net 16 (least significant)	DL To Net 16 (least significant)
N45:35	DL From Net 16 (most significant)	DL To Net 16 (most significant)

Important: If your controller or HMI platform supports CIP messaging, use the CIP Parameter object to get and set parameters.

N-File	Description
N150…N199	These N-files let you read and write parameter values in DPI Port 0 (the host PowerFlex drive) as 32-bit double words. You can interpret the data in various ways (for example, 32-bit real, 32-bit integer) To read a parameter, you need to send a message with two elements. For example, to read parameter 1, read two elements beginning at N150:2. As another example, to read parameters 2…6, read ten elements beginning at N150:4.
N150:0…1	Number of parameters in the drive
N150:2…249	Drive parameters 1…124
N151:0…249	Drive parameters 125…249
N152:0…249	Drive parameters 250…374
N153:0…249	Drive parameters 375…499
⋮	⋮
N199:0…249	Drive parameters 6125…6249

N-File	Description
N201…N212	These N-files let you read and write values to DPI and Host parameters in Ports 1…14 (for example, a HIM or adapter) as 32-bit double words. You can interpret the data in various ways (for example, 32-bit real, 32-bit integer) To read a parameter, you need to send a message with two elements. For example, to read parameter 1 in the peripheral connected to DPI port 1, read two elements beginning at N201:2. As another example, to read parameters 2…6 in the peripheral connected to DPI port 5 (the adapter), read ten elements beginning at N209:4.
N201:0…1	Number of parameters in the DPI peripheral at DPI port 1
N201:2…249	Parameters 1…124 in the DPI peripheral at DPI port 1
N202:0…249	Parameters 125…249 in the DPI peripheral at DPI port 1
N203:0…1	Number of parameters in the DPI peripheral at DPI port 2
N203:2…249	Parameters 1…124 in the DPI peripheral at DPI port 2
N204:0…249	Parameters 125…249 in the DPI peripheral at DPI port 2
N205:0…1	Number of parameters in the DPI peripheral at DPI port 3
N205:2…249	Parameters 1…124 in the DPI peripheral at DPI port 3
N206:0…249	Parameters 125…249 in the DPI peripheral at DPI port 3
N207:0…1	Number of parameters in the DPI peripheral at DPI port 4
N207:2…249	Parameters 1…124 in the DPI peripheral at DPI port 4
N208:0…249	Parameters 125…249 in the DPI peripheral at DPI port 4
N209:0…1	Number of parameters in the DPI peripheral at DPI port 5
N209:2…249	Parameters 1…124 in the DPI peripheral at DPI port 5
N210:0…249	Parameters 125…249 in the DPI peripheral at DPI port 5
N211:0…1	Number of parameters in the DPI peripheral at DPI port 6
N211:2…249	Parameters 1…124 in the DPI peripheral at DPI port 6
N212:0…249	Parameters 125…249 in the DPI peripheral at DPI port 6
The following N-Files are supported only when the adapter is used with a PowerFlex 750-Series drive.	
N213:0…1	Number of parameters in the DPI peripheral at DPI port 7
N213:2…249	Parameters 1…124 in the DPI peripheral at DPI port 7
N214:0…249	Parameters 125…249 in the DPI peripheral at DPI port 7
N215:0…1	Number of parameters in the DPI peripheral at DPI port 8
N215:2…249	Parameters 1…124 in the DPI peripheral at DPI port 8
N216:0…249	Parameters 125…249 in the DPI peripheral at DPI port 8
N217:0…1	Number of parameters in the DPI peripheral at DPI port 9
N217:2…249	Parameters 1…124 in the DPI peripheral at DPI port 9
N218:0…249	Parameters 125…249 in the DPI peripheral at DPI port 9
N219:0…1	Number of parameters in the DPI peripheral at DPI port 10
N219:2…249	Parameters 1…124 in the DPI peripheral at DPI port 10
N220:0…249	Parameters 125…249 in the DPI peripheral at DPI port 10
N221:0…1	Number of parameters in the DPI peripheral at DPI port 11
N221:2…249	Parameters 1…124 in the DPI peripheral at DPI port 11
N222:0…249	Parameters 125…249 in the DPI peripheral at DPI port 11
N223:0…1	Number of parameters in the DPI peripheral at DPI port 12
N223:2…249	Parameters 1…124 in the DPI peripheral at DPI port 12
N224:0…249	Parameters 125…249 in the DPI peripheral at DPI port 12
N225:0…1	Number of parameters in the DPI peripheral at DPI port 13
N225:2…249	Parameters 1…124 in the DPI peripheral at DPI port 13
N226:0…249	Parameters 125…249 in the DPI peripheral at DPI port 13
N227:0…1	Number of parameters in the DPI peripheral at DPI port 14
N227:2…249	Parameters 1…124 in the DPI peripheral at DPI port 14
N228:0…249	Parameters 125…249 in the DPI peripheral at DPI port 14

DPI Device Object

Class Code

Hexadecimal	Decimal
0x92	146

Services

Service Code	Implemented for:		Service Name
	Class	Instance	
0x0E	Yes	Yes	Get_Attribute_Single
0x10	Yes	Yes	Set_Attribute_Single

Instances

The number of instances depends on the number of components in the device. The total number of components can be read in Instance 0, Class Attribute 4.

Instances (Hex.)	(Dec.)	Device
0x0000…0x3FFF	0…16383	Host
0x4000…0x43FF	16384…17407	Adapter
0x4400…0x47FF	17408…18431	DPI Port 1
0x4800…0x4BFF	18432…19455	DPI Port 2
0x4C00…0x4FFF	19456…20479	DPI Port 3
0x5000…0x53FF	20480…21503	DPI Port 4
0x5400…0x57FF	21504…22527	DPI Port 5
0x5800…0x5BFF	22528…23551	DPI Port 6
0x5C00…0x5FFF (1)	22552…24575	DPI Port 7
0x6000…0x63FF (1)	24576…25599	DPI Port 8
0x6400…0x67FF (1)	25600…26623	DPI Port 9
0x6800…0x6BFF (1)	26624…27647	DPI Port 10
0x6C00…0x6FFF (1)	27648…28671	DPI Port 11
0x7000…0x73FF (1)	28672…29695	DPI Port 12
0x7400…0x77FF (1)	29696…30719	DPI Port 13
0x7800…0x7BFF (1)	30720…31743	DPI Port 14

Example	Description
0	Class Attributes (Drive)
1	Drive Component 1
2	Drive Component 2
⋮	⋮
16384	Class Attributes (Adapter)
16385	Adapter Component 1
⋮	⋮

(1) These instances are supported only when the adapter is used with a PowerFlex 750-Series drive.

Class Attributes

Attribute ID	Access Rule	Name	Data Type	Description
0	Get	Family Code	BYTE	0x00 = DPI Peripheral 0x30 = PowerFlex 70 0x34 = PowerFlex 700H 0x38, 0x39, or 0x3A= PowerFlex 700 0x40 = PowerFlex 7000 0x48, 0x49, or 0x4A = PowerFlex 700S 0x5A = SMC Flex 0x68, 0x69, or 0x6A = PowerFlex 700VC 0x90 = PowerFlex 753/755 0xA0 = 20-750-xxx Option Module 0xFF = HIM
1	Get	Family Text	STRING[16]	Text identifying the device.

Attribute ID	Access Rule	Name	Data Type	Description
2	Set	Language Code	BYTE	0 = English 1 = French 2 = Spanish 3 = Italian 4 = German 5 = Japanese 6 = Portuguese 7 = Mandarin Chinese 8 = Russian 9 = Dutch
3	Get	Product Series	BYTE	1 = A 2 = B …
4	Get	Number of Components	BYTE	Number of components (for example, main control board, I/O boards, and so forth) in the device.
5	Set	User Definable Text	STRING[16]	Text identifying the device with a user-supplied name.
6	Get	Status Text	STRING[12]	Text describing the status of the device.
7	Get	Configuration Code	BYTE	Identification of variations.
8	Get	Configuration Text	STRING[16]	Text identifying a variation of a family device.
9	Get	Brand Code	WORD	0x0001 = Allen-Bradley
11	Get	NVS Checksum	WORD	Checksum of the Non-Volatile Storage in a device.
12	Get	Class Revision	WORD	2 = DPI
13	Get	Character Set Code	BYTE	0 = SCANport HIM 1 = ISO 8859-1 (Latin 1) 2 = ISO 8859-2 (Latin 2) 3 = ISO 8859-3 (Latin 3) 4 = ISO 8859-4 (Latin 4) 5 = ISO 8859-5 (Cyrillic) 6 = ISO 8859-6 (Arabic) 7 = ISO 8859-7 (Greek) 8 = ISO 8859-8 (Hebrew) 9 = ISO 8859-9 (Turkish) 10 = ISO 8859-10 (Nordic) 255 = ISO 10646 (Unicode)
14	Get	Product Option Support	BOOL[64]	
15	Get	Languages Supported	STRUCT of: BYTE BYTE[n]	 Number of Languages Language Codes (see Class Attribute 2)
16	Get	Date of Manufacture	STRUCT of: WORD BYTE BYTE	 Year Month Day
17	Get	Product Revision	STRUCT of: BYTE BYTE	 Major Firmware Release Minor Firmware Release
18	Get	Serial Number	DWORD	Value between 0x00000000 and 0xFFFFFFFF
19	Set	Language Selected	BYTE	0 = Default (HIM will prompt at start up) 1 = Language was selected (no prompt)
20	Set	Customer-Generated Firmware	STRING[36]	GUID (Globally Unique Identifier) identifying customer firmware flashed into the device.
30	Get	International Status Text	STRINGN	Text describing the status of device with support for Unicode.
31	Get/Set	International User Definable Text	STRINGN	Text identifying the device with a user-supplied name with support for Unicode.

Attribute ID	Access Rule	Name	Data Type	Description
34	Get	Key Information	STRUCT of: DWORD DWORD WORD WORD WORD BYTE BYTE BYTE BYTE BYTE BYTE[16]	 Rating Code Device Serial Number Customization Code Customization Revision Brand Code Family Code Config Code Language Code Major Revision Minor Revision Customer-Generated Firmware UUID
35	Get	NVS CRC	DWORD	A 32-bit CRC of the Non-Volatile Storage in a device.
39	Get	SI Driver Code	WORD	Code identifying the protocol between the device and host.
128	Get	Customization Code	WORD	Code identifying the customized device.
129	Get	Customization Revision Number	WORD	Revision of the customized device.
130	Get	Customization Device Text	STRING[32]	Text identifying the customized device.

Instance Attributes

Attribute ID	Access Rule	Name	Data Type	Description
3	Get	Component Name	STRING[32]	Name of the component
4	Get	Component Firmware Revision	STRUCT of: BYTE BYTE	 Major Revision Minor Revision
8	Get	Component Serial Number	DWORD	Value between 0x00000000 and 0xFFFFFFFF
9	Get	International Component Name	STRINGN	Name of the component with support for Unicode.

DPI Parameter Object

Class Code

Hexadecimal	Decimal
0x93	147

To access 'Host Config' parameters, use the HOST DPI Parameter Object (Class code 0x9F).

Instances

The number of instances depends on the number of parameters in the device. The total number of parameters can be read in Instance 0, Attribute 0.

Instances (Hex.)	(Dec.)	Device
0x0000…0x3FFF	0…16383	Host
0x4000…0x43FF	16384…17407	Adapter
0x4400…0x47FF	17408…18431	DPI Port 1
0x4800…0x4BFF	18432…19455	DPI Port 2
0x4C00…0x4FFF	19456…20479	DPI Port 3
0x5000…0x53FF	20480…21503	DPI Port 4
0x5400…0x57FF	21504…22527	DPI Port 5
0x5800…0x5BFF	22528…23551	DPI Port 6
0x5C00…0x5FFF (1)	23552…24575	DPI Port 7
0x6000…0x63FF (1)	24576…25599	DPI Port 8
0x6400…0x67FF (1)	25600…26623	DPI Port 9

Example	Description
0	Class Attributes (Drive)
1	Drive Parameter 1 Attributes
2	Drive Parameter 2 Attributes
⋮	⋮
16384	Class Attributes (Adapter)
16385	Adapter Parameter 1 Attributes
⋮	⋮

Instances (Hex.)	(Dec.)	Device
0x6800…0x6BFF (1)	26624…27647	DPI Port 10
0x6C00…0x6FFF (1)	27648…28671	DPI Port 11
0x7000…0x73FF (1)	28672…29695	DPI Port 12
0x7400…0x77FF (1)	29696…30719	DPI Port 13
0x7800…0x7BFF (1)	30720…31743	DPI Port 14

Example	Description

(1) These instances are supported only when the adapter is used with a PowerFlex 750-Series drive.

Class Attributes

Attribute ID	Access Rule	Name	Data Type	Description
0	Get	Number of Instances	WORD	Number of parameters in the device
1	Set	Write Protect Password	WORD	0 = Password disabled n = Password
2	Set	NVS Command Write	BYTE	0 = No Operation 1 = Store values in active memory to NVS 2 = Load values in NVS to active memory 3 = Load default values to active memory
3	Get	NVS Parameter Value Checksum	WORD	Checksum of all parameter values in a user set in NVS
4	Get	NVS Link Value Checksum	WORD	Checksum of parameter links in a user set in NVS
5	Get	First Accessible Parameter	WORD	First parameter available if parameters are protected by passwords. A '0' indicates all parameters are protected.
7	Get	Class Revision	WORD	2 = DPI
8	Get	First Parameter Processing Error	WORD	The first parameter that has been written with a value outside of its range. A '0' indicates no errors.
9	Set	Link Command	BYTE	0 = No Operation 1 = Clear All Parameter Links (This does not clear links to function blocks.)

Instance Attributes

Attribute ID	Access Rule	Name	Data Type	Description
6	Get	DPI Offline Read Full	STRUCT of: BOOL[32] CONTAINER CONTAINER CONTAINER STRING[16] STRING[4] WORD WORD WORD WORD WORD WORD BYTE BYTE WORD WORD CONTAINER WORD WORD WORD INT	 Descriptor Offline minimum value Offline maximum value Offline default value Parameter name Offline parameter units Online minimum parameter instance Online maximum parameter instance Online default parameter instance Multiple parameter instance Divisor parameter instance Base parameter instance Offset parameter instance Formula number Pad byte (always zero) Help instance Pad word (always a value of zero) Parameter value Multiplier Divisor Base Offset
7	Get	DPI Online Read Full	STRUCT of: BOOL[32] CONTAINER(1) CONTAINER CONTAINER CONTAINER WORD WORD STRING[4] WORD WORD WORD INT BYTE[3] BYTE STRING[16]	 Descriptor (see page 202) Parameter value Minimum value Maximum value Default value Next parameter Previous parameter Units (for example, Amp, Hz) Multiplier (2) Divisor (2) Base (2) Offset (2) Link (source of the value) (0 = no link) Always zero (0) Parameter name
8	Get	DPI Descriptor	BOOL[32]	Descriptor (see page 202)
9	Get/Set	DPI Parameter Value	Various	Parameter value in NVS. (3)
10	Get/Set	DPI RAM Parameter Value	Various	Parameter value in temporary memory. Valid only for DPI drives.
11	Get/Set	DPI Link	BYTE[3]	Link (parameter or function block that is the source of the value) (0 = no link)
12	Get	Help Object Instance	WORD	ID for help text for this parameter
13	Get	DPI Read Basic	STRUCT of: BOOL[32] CONTAINER CONTAINER CONTAINER CONTAINER STRING[16] STRING[4]	 Descriptor (see page 202) Parameter value Minimum value Maximum value Default value Parameter name Units (for example, Amp, Hz)
14	Get	DPI Parameter Name	STRING[16]	Parameter name
15	Get	DPI Parameter Alias	STRING[16]	Customer supplied parameter name.
16	Get	Parameter Processing Error	BYTE	0 = No error 1 = Value is less than the minimum 2 = Value is greater than the maximum

Attribute ID	Access Rule	Name	Data Type	Description
18	Get	International DPI Offline Parameter Text	STRUCT of: STRINGN STRINGN	 International parameter name International offline units
19	Get	International DPI Online Parameter Text	STRUCT of: STRINGN STRINGN	 International parameter name International offline units
20	Get	International DPI Online Read Full	STRUCT of: BOOL[32] CONTAINER CONTAINER CONTAINER CONTAINER WORD WORD WORD WORD WORD INT BYTE[3] BYTE BOOL[32] STRINGN STRINGN	 Descriptor Parameter value Online minimum value Online maximum value Online default value Next Previous Multiplier Divisor Base Offset Link Pad word (always zero) Extended descriptor International parameter name International online parameter units
21	Get	DPI Extended Descriptor	DWORD	Extended descriptor (see page 203)
22	Get	International DPI Offline Read Full	STRUCT of: BOOL CONTAINER CONTAINER CONTAINER WORD WORD WORD WORD WORD WORD WORD BYTE BYTE WORD WORD CONTAINER WORD WORD WORD INT BOOL[32] STRINGN STRINGN	 Descriptor Offline minimum value Offline maximum value Offline default value Online minimum parameter instance Online maximum parameter instance Online default parameter instance Multiple parameter instance Divisor parameter instance Base parameter instance Offset parameter instance Formula number Pad byte (always zero) Help instance Pad word (always a value of zero) Parameter value Multiplier Divisor Base Offset Extended DPI descriptor International DPI parameter name International DPI offline parameter units

(1) A CONTAINER is a 32-bit block of data that contains the data type used by a parameter value. If signed, the value is sign extended. Padding is used in the CONTAINER to ensure that it is always 32-bits.

(2) This value is used in the formulas used to convert the parameter value between display units and internal units. See Formulas for Converting on page 204.

(3) Do **not** continually write parameter data to NVS. See the attention on page 105.

Descriptor Attributes

Bit	Name	Description
0	Data Type (Bit 1)	Right bit is least significant bit (0). 000 = BYTE used as an array of Boolean 001 = WORD used as an array of Boolean 010 = BYTE (8-bit integer) 011 = WORD (16-bit integer) 100 = DWORD (32-bit integer) 101 = TCHAR (8-bit (not unicode) or 16-bits (unicode) 110 = REAL (32-bit floating point value) 111 = Use bits 16, 17, 18
1	Data Type (Bit 2)	
2	Data Type (Bit 3)	
3	Sign Type	0 = Unsigned 1 = Signed
4	Hidden	0 = Visible 1 = Hidden
5	Not a Link Sink	0 = Parameter can sink a link 1 = Parameter cannot sink a link
6	Not Recallable	0 = Recallable from NVS 1 = Not Recallable from NVS
7	ENUM	0 = No ENUM text 1 = ENUM text
8	Writable	0 = Read only 1 = Read/write
9	Not Writable When Enabled	0 = Writable when enabled (for example, drive running) 1 = Not writable when enabled
10	Instance	0 = Parameter value is not a Reference to another parameter 1 = Parameter value refers to another parameter
11	Uses Bit ENUM Mask	This parameter instance supports the Bit ENUM Mask attribute. For more information, see the definition of the attribute.
12	Decimal Place (Bit 0)	Number of digits to the right of the decimal point. 0000 = 0 1111 = 15
13	Decimal Place (Bit 1)	
14	Decimal Place (Bit 2)	
15	Decimal Place (Bit 3)	
16	Extended Data Type (Bit 4)	Right bit is least significant bit (16). 000 = Reserved 001 = DWORD used as an array of Boolean 010 = Reserved 011 = Reserved 100 = Reserved 101 = Reserved 110 = Reserved 111 = Reserved
17	Extended Data Type (Bit 5)	
18	Extended Data Type (Bit 6)	
19	Parameter Exists	Used to mark parameters that are not available to network tools.
20	Not Used	Reserved
21	Formula Links	Indicates the Formula Data is derived from other parameters.
22	Access Level (Bit 1)	A 3-bit field used to control access to parameter data.
23	Access Level (Bit 2)	
24	Access Level (Bit 3)	
25	Writable ENUM	ENUM text: 0 = Read Only, 1 = Read/Write
26	Not a Link Source	0 = May be the source end of a link 1 = May not be the source end of a link
27	Enhanced Bit ENUM	Parameter supports enhanced bit ENUMs.
28	Enhanced ENUM	Parameter supports enhanced ENUMs.
29	Uses DPI Limits Object	Parameter uses the DPI LImits Object.
30	Extended Descriptor	Parameter uses Extended Descriptor bits, which can be obtained by reading the DPI Extended Descriptor attribute for this parameter.
31	Always Upload/Download	Parameter shall always be included in uploads and downloads.

Extended Descriptor Attributes

Bit	Name	Description
0	Indirect Mode	0 = Analog (selects entire parameters) 1 = Digital (selects individual bits within parameters)
1	Indirect Type 0	Analog input list (Instance 0xFFFF)
2	Indirect Type 1	Digital input list (Instance 0xFFFE)
3	Indirect Type 2	Feedback list (Instance 0xFFFD)
4	Indirect Type 3	Analog output list (Instance 0xFFFC)
5	Indirect Type 4	Digital output list (Instance 0xFFFB)
6	Indirect Type 5	Undefined (Instance 0xFFFA)
7	Indirect Type 6	Undefined (Instance 0xFFF9)
8	Indirect Type 7	Undefined (Instance 0xFFF8)
9	Indirect Type 8	Undefined (Instance 0xFFF7)
10	Indirect Type 9	Undefined (Instance 0xFFF6)
11	Indirect Type 10	Undefined (Instance 0xFFF5)
12	Indirect Type 11	Undefined (Instance 0xFFF4)
13	Indirect Type 12	Undefined (Instance 0xFFF3)
14	Indirect Type 13	Undefined (Instance 0xFFF2)
15	Indirect Type 14	Parameter-specific list
16	FP Max Decimals Bit 0	These four bits are used on REAL parameters only. They indicate the maximum number of decimal places to be displayed for small values. A value of 0 indicates to not limit the number of decimal places used.
17	FP Max Decimals Bit 1	
18	FP Max Decimals Bit 2	
19	FP Max Decimals Bit 1	
20	Extended Parameter Reference	0 = Not an Extended Parameter Reference 1 = Extended Parameter Reference An Extended Parameter Reference contains a reference to another parameter. The value is formatted the same as an analog mode Indirect Selector parameter (SSpppp, where SS = slot number of device to which this Extended Parameter Reference is pointing, and pppp = number of the parameter or diagnostic item to which this Extended Parameter Reference is pointing). Note that an Extended Parameter Reference can only select parameters unlike an Indirect Selector. An Extended Parameter Reference could be used to configure a Datalink or show the source of a Reference (among other uses).
21	Uses Rating Table Object	This parameter has rating-dependent defaults and limits that can be obtained from the Rating Table Object. The Offline Read Full will include the default value for the smallest rating and limits that will accommodate the full range of values allowed in the family of devices using this particular combination of Family Code and Config Code. The Online Read Full will include the rating-dependent default and limit values for this particular combination of Family Code, Config Code, and Rating Code.
22	Writable Referenced Parameter	This bit must be zero unless the parameter is an Extended Parameter Reference. If the parameter is an Extended Parameter Reference, then: 0 = The referenced parameter may be read-only or writable. 1 = The referenced parameter must always be writable (including while running).
23	Disallow Zero	This bit must be zero unless the parameter is an Indirect Selector or Extended Parameter Reference. If the parameter is an Indirect Selector or Extended Parameter Reference, then: 0 = Allow zero 1 = Disallow zero If this bit is cleared (indicating that a value of zero is allowed), the device must support the 'Zero Text' parameter attribute so that a software tool or HIM can obtain text from the Zero Text parameter attribute. If this bit is set (indicating that a value of zero is disallowed), a software tool or HIM will not allow the user to enter a value of zero.
24	Datalink Out	This bit is used by offline tools and indicates that this is a Datalink Out parameter. Bit 20 must also be set.
25	Datalink In	This bit is used by offline tools and indicates that this is a Datalink In parameter. Bits 20 and 22 must also be set.
26	Not Writable While IO Active	This parameter cannot be written if the I/O data being exchanged between the Host and the peripheral is valid.
27	Command Parameter	This parameter commands the drive to take an action, such as 'Reset Defaults' or 'Autotune', and then returns to a value of zero. Offline software tools will not allow setting this parameter to anything other than a value of zero. If an offline file contains a Command Parameter with a non-zero value, the offline software tool will change the value to zero. Note that command parameters cannot have values that do not return to zero.

Bit	Name	Description
28	Current Value Is Default	This bit identifies a parameter that will not change if a 'Reset Defaults' is commanded. For example, if a drive contains a Language parameter that is set to German, setting defaults will leave the parameter set to German. Likewise, if the parameter is set to French, setting defaults will leave the parameter set to French.
29	Use Zero Text	If the 'Disallow Zero' bit is set, this bit must be cleared. If the 'Disallow Zero' bit is cleared, then: 0 = Use Disabled Text parameter class attribute. 1 = Use Zero Text parameter instance attribute.
30-31	Reserved	Reserved

Formulas for Converting

Display Value = ((Internal Value + Offset) x Multiplier x Base) / (Divisor x $10^{\text{Decimal Places}}$)

Internal Value = ((Display Value x Divisor x $10^{\text{Decimal Places}}$) / (Multiplier x Base)) - Offset

Common Services

Service Code	Implemented for:		Service Name
	Class	Instance	
0x0E	Yes	Yes	Get_Attribute_Single
0x10	Yes	Yes	Set_Attribute_Single

Object Specific Services

Service Code	Implemented for:		Service Name	Allocation Size (in bytes)	
	Class	Instance		Par. Number	Par. Value
0x4B	Yes	No	Get_Attributes_Scattered	2	2
0x4C	Yes	No	Set_Attributes_Scattered	2	2

The table below lists the parameters for the Get_Attributes_Scattered and Set_Attributes_Scattered object-specific service:

Name	Data Type	Description
Parameter Number	DWORD	Parameter to read or write
Parameter Value	DWORD	Parameter value to read or write (zero when reading)

DPI Fault Object

Class Code

Hexadecimal	Decimal
0x97	151

Products such as PowerFlex drives use this object for faults. Adapters use this object for events.

Services

Service Code	Implemented for:		Service Name
	Class	Instance	
0x0E	Yes	Yes	Get_Attribute_Single
0x10	Yes	Yes	Set_Attribute_Single

Instances

The number of instances depends on the maximum number of faults or events supported in the queue. The maximum number of faults/events can be read in Instance 0, Attribute 2.

Instances (Hex.)	(Dec.)	Device
0x0000…0x3FFF	0…16383	Host
0x4000…0x43FF	16384…17407	Adapter
0x4400…0x47FF	17408…18431	DPI Port 1
0x4800…0x4BFF	18432…19455	DPI Port 2
0x4C00…0x4FFF	19456…20479	DPI Port 3
0x5000…0x53FF	20480…21503	DPI Port 4
0x5400…0x57FF	21504…22527	DPI Port 5
0x5800…0x5BFF	22528…23551	DPI Port 6

Example	Description
0	Class Attributes (Drive)
1	Most Recent Drive Fault
2	Second Most Recent Drive Fault
⋮	⋮
16384	Class Attributes (Adapter)
16385	Most Recent Adapter Event
⋮	⋮

Class Attributes

Attribute ID	Access Rule	Name	Data Type	Description
1	Get	Class Revision	WORD	Revision of object
2	Get	Number of Instances	WORD	Maximum number of faults/events that the device can record in its queue
3	Set	Fault Command Write	BYTE	0 = No Operation 1 = Clear Fault/Event 2 = Clear Fault/Event Queue 3 = Reset Device
4	Get	Fault Trip Instance Read	WORD	Fault that tripped the device. For adapters, this value is always 1 when faulted.
5	Get	Fault Data List	STRUCT of: BYTE BYTE WORD[n]	Number of faults/events in the queue. A '0' indicates the fault queue is empty.
6	Get	Number of Recorded Faults	WORD	Number of faults/events in the queue. A '0' indicates the fault queue is empty.
7	Get	Fault Parameter Reference	WORD	Number of faults/events in the queue. A '0' indicates the fault queue is empty.

Instance Attributes

Attribute ID	Access Rule	Name	Data Type	Description
0	Get	Full/All Information	STRUCT of WORD STRUCT of: BYTE BYTE STRING[16] STRUCT of: LWORD BOOL[16] WORD CONTAINER[n]	Fault code Fault source DPI port DPI Device Object Fault text Fault time stamp Timer value (0 = timer not supported) BOOL[0]: (0 = invalid data, 1 = valid data) BOOL[1]: (0 = elapsed time, 1 = real time) BOOL[2…15]: Not used Reserved Reserved
1	Get	Basic Information	STRUCT of WORD STRUCT of: BYTE BYTE STRUCT of: LWORD BOOL[16]	Fault code Fault source DPI port DPI Device Object Fault time stamp Timer value (0 = timer not supported) BOOL[0]: (0 = invalid data, 1 = valid data) BOOL[1]: (0 = elapsed time, 1 = real time) BOOL[2…15]: Not used
2	Get	International Fault Text	STRINGN	Text describing the fault with support for Unicode.

DPI Alarm Object

Class Code

Hexadecimal	Decimal
0x98	152

Products such as PowerFlex drives use this object for alarms or warnings. Adapters do not support this object.

Services

Service Code	Implemented for:		Service Name
	Class	Instance	
0x0E	Yes	Yes	Get_Attribute_Single
0x10	Yes	Yes	Set_Attribute_Single

Instances

The number of instances depends on the maximum number of alarms supported by the queue. The maximum number of alarms can be read in Instance 0, Attribute 2.

Instances (Hex.)	(Dec.)	Device
0x0000…0x3FFF	0…16383	Host

Only host devices can have alarms.

Example	Description
0	Class Attributes (Drive)
1	Most Recent Alarm
2	Second Most Recent Alarm
⋮	⋮

Class Attributes

Attribute ID	Access Rule	Name	Data Type	Description
1	Get	Class Revision	WORD	Revision of object
2	Get	Number of Instances	WORD	Maximum number of alarms that the device can record in its queue
3	Set	Alarm Command Write	BYTE	0 = No Operation 1 = Clear Alarm 2 = Clear Alarm Queue 3 = Reset Device
4	Get	Fault Data List	STRUCT of: BYTE BYTE WORD[n]	Reserved
5	Get	Number of Recorded Alarms	WORD	Number of alarms in the queue. A '0' indicates the alarm queue is empty.

Instance Attributes

Attribute ID	Access Rule	Name	Data Type	Description
0	Get	Full/All Information	STRUCT of WORD STRUCT of: BYTE BYTE STRING[16] STRUCT of: LWORD BOOL[16] WORD CONTAINER[n]	Alarm code Alarm source DPI port DPI Device Object Alarm text Alarm time stamp Timer value (0 = timer not supported) BOOL[0]: (0 = invalid data, 1 = valid data) BOOL[1]: (0 = elapsed time, 1 = real time) BOOL[2…15] Reserved Reserved Reserved
1	Get	Basic Information	STRUCT of WORD STRUCT of: BYTE BYTE STRUCT of: LWORD BOOL[16]	Alarm code Alarm source DPI port DPI Device Object Alarm time stamp Timer value (0 = timer not supported) BOOL[0]: (0 = invalid data, 1 = valid data) BOOL[1]: (0 = elapsed time, 1 = real time) BOOL[2…15] Reserved
2	Get	International Alarm Text	STRINGN	Text describing the alarm with support for Unicode.

DPI Diagnostic Object

Class Code

Hexadecimal	Decimal
0x99	153

Services

Service Code	Implemented for:		Service Name
	Class	Instance	
0x0E	Yes	Yes	Get_Attribute_Single
0x10	Yes	Yes	Set_Attribute_Single

Instances

The number of instances depends on the maximum number of diagnostic items in the device. The total number of diagnostic items can be read in Instance 0, Attribute 2.

Instances (Hex.)	(Dec.)	Device
0x0000…0x3FFF	0…16383	Host
0x4000…0x43FF	16384…17407	Adapter
0x4400…0x47FF	17408…18431	DPI Port 1
0x4800…0x4BFF	18432…19455	DPI Port 2
0x4C00…0x4FFF	19456…20479	DPI Port 3
0x5000…0x53FF	20480…21503	DPI Port 4
0x5400…0x57FF	21504…22527	DPI Port 5
0x5800…0x5BFF	22528…23551	DPI Port 6

Example	Description
0	Class Attributes (Drive)
1	Drive Diagnostic Item 1
2	Drive Diagnostic Item 2
⋮	⋮
16384	Class Attributes (Adapter)
16385	Adapter Diagnostic Item1
⋮	⋮

Class Attributes

Attribute ID	Access Rule	Name	Data Type	Description
1	Get	Class Revision	WORD	1
2	Get	Number of Instances	WORD	Number of diagnostic items in the device.
3	Get	ENUM Offset	WORD	DPI ENUM object instance offset

Instance Attributes

Attribute ID	Access Rule	Name	Data Type	Description
0	Get	Full/All Information	STRUCT of:	
			BOOL[32]	Descriptor (see page 202)
			CONTAINER (1)	Value
			CONTAINER	Minimum value
			CONTAINER	Maximum value
			CONTAINER	Default value
			WORD	Pad Word
			WORD	Pad Word
			STRING[4]	Units (for example, Amp, Hz)
			WORD	Multiplier (2)
			WORD	Divisor (2)
			WORD	Base (2)
			INT	Offset (2)
			DWORD	Link (source of the value) (0 = no link)
			STRING[16]	Diagnostic name text

Attribute ID	Access Rule	Name	Data Type	Description
1	Get/Set	Value	Various	Diagnostic item value
2	Get	International Diagnostic Item Text	STRUCT of:	
			STRINGN	Diagnostic name text
			STRINGN	Diagnostic units text
3	Get	International Full Read All	STRUCT of:	
			BOOL[32]	Descriptor
			CONTAINER	Value
			CONTAINER	Minimum
			CONTAINER	Maximum
			CONTAINER	Default
			WORD	Pad Word
			WORD	Pad Word
			WORD	Multiplier
			WORD	Divisor
			WORD	Base
			INT	Offset
			DWORD	Pad
			BOOL[32]	Extended descriptor
			STRINGN	Diagnostic name text
			STRINGN	Diagnostic units text

(1) A CONTAINER is a 32-bit block of data that contains the data type used by a value. If signed, the value is sign extended. Padding is used in the CONTAINER to ensure that it is always 32-bits.

(2) This value is used in the formulas used to convert the value between display units and internal units. See Formulas for Converting on page 204.

DPI Time Object

Class Code

Hexadecimal	Decimal
0x9B	155

Services

Service Code	Implemented for:		Service Name
	Class	Instance	
0x0E	Yes	Yes	Get_Attribute_Single
0x10	Yes	Yes	Set_Attribute_Single

Instances

The number of instances depends on the number of timers in the device. Instance 1 is always reserved for a real-time clock although a device may not support it. The total number of timers can be read in Instance 0, Attribute 2.

Instances (Hex.)	(Dec.)	Device
0x0000…0x3FFF	0…16383	Host
0x4000…0x43FF	16384…17407	Adapter
0x4400…0x47FF	17408…18431	DPI Port 1
0x4800…0x4BFF	18432…19455	DPI Port 2
0x4C00…0x4FFF	19456…20479	DPI Port 3
0x5000…0x53FF	20480…21503	DPI Port 4
0x5400…0x57FF	21504…22527	DPI Port 5
0x5800…0x5BFF	22528…23551	DPI Port 6

Example	Description
0	Class Attributes (Drive)
1	Real Time Clock (Predefined) (not always supported)
2	Timer 1
3	Timer 2
⋮	⋮

Class Attributes

Attribute ID	Access Rule	Name	Data Type	Description
1	Get	Class Revision	WORD	Revision of object
2	Get	Number of Instances	WORD	Number of timers in the object, excluding the real-time clock that is predefined.
3	Get	First Device Specific Timer	WORD	Instance of the first timer that is not predefined.
4	Set	Time Command Write	BYTE	0 = No Operation 1 = Clear all timers (Does not clear the real-time clock or read only timers)
5	Get	Number of Supported Time Zones	WORD	Number of time zones described in the Time Zone List attribute.
6	Get	Time Zone List	STRUCT	Identifies a time zone.
7	Get/Set	Active Time Zone ID	WORD	The ID field of the Time Zone List structure for the desired time zone.
8	Get	Active Time Zone Data	STRUCT of: INT BYTE BYTE BYTE BYTE BYTE BYTE INT BYTE BYTE BYTE BYTE BYTE BYTE	 Standard bias Standard month Standard day of week Standard week Standard hour Standard minute Standard second Daylight offset Daylight month Daylight day of week Daylight week Daylight hour Daylight minute Daylight second
9	Get/Set	Custom Time Zone Data	STRUCT of: INT BYTE BYTE BYTE BYTE BYTE BYTE INT BYTE BYTE BYTE BYTE BYTE BYTE	 Standard bias Standard month Standard day of week Standard week Standard hour Standard minute Standard second Daylight offset Daylight month Daylight day of week Daylight week Daylight hour Daylight minute Daylight second

Instance Attributes

Attribute ID	Access Rule	Name	Data Type	Description
0	Get	Read Full	STRUCT of: STRING[16] LWORD or STRUCT BOOL[16]	 Name of the timer Elapsed time in milliseconds unless timer is a real-time clock (see attribute 2) See attribute 3
1	Get	Timer Text	STRING[16]	Name of the timer
2	Get/Set	Timer Value	LWORD -or- STRUCT of: WORD BYTE BYTE BYTE BYTE BYTE BYTE	Elapsed time in milliseconds unless the timer is a real-time clock. Real-Time Clock Data: Milliseconds (0…999) Seconds (0…59) Minutes (0…59) Hours (0…23) Days (1…31) Months (1 = January, 12 = December) Years (since 1972)
3	Get	Timer Descriptor	BOOL[16]	BOOL[0]: (0 = invalid data, 1 = valid data) BOOL[1]: (0 = elapsed time, 1 = real time) BOOL[2…15]: Not used
4	Get	International Read Full	STRUCT of: STRINGN STRUCT BOOL[16]	 International timer text Timer value Timer descriptor
5	Get	International Timer Text	STRINGN	Name of this timer
6	Get	Clock Status	BOOL[32]	Identifies clock status
8	Get/Set	Number of Leap Seconds	INT	Identifies the current number of Leap Seconds.
9	Get	Clock Options	BOOL[32]	Identifies the optional functionality available in the device's System Clock.
10	Get/Set	Clock Options Enable	BOOL[32]	Identifies which of the clock's options are enabled.

TCP/IP Interface Object

Class Code

Hexadecimal	Decimal
0xF5	245

Services

Service Code	Implemented for:		Service Name
	Class	Instance	
0x0E	Yes	Yes	Get_Attribute_Single
0x10	No	Yes	Set_Attribute_Single

Instances

Get_Attribute_All is supported for instances. The adapter supports one instance of the TCP/IP Interface object.

Number	Description
0	Class Attributes
1	Object Attributes

Class Attributes

Attribute ID	Access Rule	Name	Data Type	Description
1	Get	Revision	WORD	The revision of this object

Instance Attributes

Attribute ID	Access Rule	Name	Data Type	Description
1	Get	Status of TCP/IP Network Interface	DWORD	
2	Get	Configuration Capability	DWORD	0x000000F4
3	Get/Set	Configuration Control	DWORD	0 = Configuration from NVS 2 = Configuration from DHCP
4	Get	Physical Link Object	STRUCT of: UINT Padded EPATH	 2 words 20 F6 24 01 (Enet Link Object instance 1)
5	Get/Set	Interface Configuration	STRUCT of: UDINT UDINT UDINT UDINT UDINT STRING	 IP Address Network Mask Gateway Address Primary DNS Secondary DNS Default Domain Name for not fully qualified host names
6	Get/Set	Host Name	STRING	Host name when using DHCP
8	Get/Set	TTL Value	USINT	Time to Live value for EtherNet/IP multicast packets
9	Get/Set	Multicast Config	Struct of: USINT USINT UINT UDINT	 Allocation Control Reserved Number of multicast addresses to allocate (1-4) Multicast starting address.
10	Get/Set	SelectAcd	BOOL	Activates the use of ACD
11		LastConflictDetected	Struct of: USINT USINT[6] USINT[28]	 AcdActivity RemoteMAC ArpPdu

Ethernet Link Object

Class Code

Hexadecimal	Decimal
0xF6	246

Services

The following common services will be implemented for the Ethernet Link Object.

Service Code	Implemented for:		Service Name
	Class	Instance	
0x0E	Yes	Yes	Get_Attribute_Single
0x10	No	Yes	Set_Attribute_Single
0x4C	No	Yes	Get_and_Clear

Instances

The adapter supports one instance of the TCP/IP Interface object.

Number	Description
0	Class Attributes
1	Object Attributes Ethernet Port 1
2	Object Attributes Ethernet Port 2

Class Attributes

The following class attributes will be supported.

Attribute ID	Access Rule	Name	Data Type	Value
1	Get	Revision	UINT	3
2	Get	Max. Instance	UINT	2
3	Get	Number of Instances	UINT	2

Instance Attributes

Two instances of the Ethernet Link Object will be supported.

Attribute ID	Access Rule	Name	Data Type	Description
1	Get	Interface Speed	UDINT	10 or 100 megabits per second (Mbs)
2	Get	Interface Flags	DWORD	See EtherNet/IP specifications
3	Get	Physical Address	Array of 6 USINTs	MAC address
4	Get	Interface Counters	STRUCT of: UDINT UDINT UDINT UDINT UDINT UDINT UDINT UDINT UDINT UDINT UDINT	 In Octets In Ucast packets In NUcast packets In Discards In Errors In Unknown Protos Out Octets Out Ucast packets Out NUcast packets Out Discards Out Errors

Attribute ID	Access Rule	Name	Data Type	Description
5	Get	Media Counters	STRUCT of: DWORD DWORD DWORD DWORD DWORD DWORD DWORD DWORD DWORD DWORD DWORD DWORD	RX = Received, TX = Transmitted RX frames not having integral number of octets long RX frames not passing FCS check TX frames having one collision TX frames having multiple collisions Number of times of SQE test error message TX Frames delayed first attempt by busy medium Collisions detected later than 512 bit-times in trans. TX frames failing due to excessive collisions TX frames failing due to intern MAC sublayer TX error Times of carrier sense condition loss during trans. RX frames exceeding the maximum frame size RX frames failing due to intern MAC sublayer RX error
6	Get/Set	Interface Control	Struct of: WORD UINT	Struct of: Control Bits Forced Interface Speed
7	Get	Interface Type	USINT	2 = Twisted-pair (e.g., 10Base-T, 100Base-TX, 1000Base-T, etc.)
8	Get	Interface State	USINT	0 = Unknown interface state 1 = The interface is enabled and is ready to send and receive data 2 = The interface is disabled 3 = The interface is testing
9	Get/Set	Admin State	USINT	1 = Enable the interface (default) 2 = Disable the interface.
10	Get	Interface Label	SHORT_STRING	Instance 1: LS 1 Instance 2: LS 2

Logic Command/Status Words

This appendix presents the definitions of the Logic Command and Logic Status words that are used for some products that can be connected to the adapter. If the Logic Command/Logic Status for the product that you are using is not listed, refer to your product's documentation.

PowerFlex 70/70EC, PowerFlex 700/700VC, and PowerFlex 700H Drives

Logic Command Word

Logic Bits																	
15	14	13	12	11	10	9	8	7	6	5	4	3	2	1	0	Command	Description
															x	Stop (1)	0 = Not Stop 1 = Stop
														x		Start (1)(2)	0 = Not Start 1 = Start
													x			Jog	0 = Not Jog (Par. 100) 1 = Jog
												x				Clear Faults	0 = Not Clear Faults 1 = Clear Faults
										x	x					Direction	00 = No Command 01 = Forward Command 10 = Reverse Command 11 = Hold Direction Control
									x							Local Control	0 = No Local Control 1 = Local Control
								x								MOP Increment	0 = Not Increment 1 = Increment
						x	x									Accel Rate	00 = No Command 01 = Accel Rate 1 Command (Par. 140) 10 = Accel Rate 2 Command (Par. 141) 11 = Hold Accel Rate
				x	x											Decel Rate	00 = No Command 01 = Decel Rate 1 Command (Par. 142) 10 = Decel Rate 2 Command (Par. 143) 11 = Hold Decel Rate
	x	x	x													Reference Select (3)	000 = No Command 001 = Ref A Select (Par. 90) 010 = Ref B Select (Par. 93) 011 = Preset 3 (Par. 103) 100 = Preset 4 (Par. 104) 101 = Preset 5 (Par. 105) 110 = Preset 6 (Par. 106) 111 = Preset 7 (Par. 107)
x																MOP Decrement	0 = Not Decrement 1 = Decrement

(1) A '0 = Not Stop' condition (logic 0) must first be present before a '1 = Start' condition will start the drive. The Start command acts as a momentary Start command. A '1' will start the drive, but returning to '0' **will not** stop the drive.

(2) This Start will not function if a digital input (parameters 361…366) is programmed for 2-Wire Control (option 7, 8 or 9).

(3) This Reference Select will not function if a digital input (parameters 361…366) is programmed for 'Speed Sel 1, 2 or 3' (option 15, 16 or 17). Note that Reference Select is 'Exclusive Ownership' – see drive User Manual for more information.

Logic Status Word

Logic Bits																	
15	14	13	12	11	10	9	8	7	6	5	4	3	2	1	0	Status	Description
															x	Ready	0 = Not Ready (Par. 214) 1 = Ready
														x		Active	0 = Not Active (Running) 1 = Active
													x			Command Direction	0 = Reverse 1 = Forward
												x				Actual Direction	0 = Reverse 1 = Forward
											x					Accel	0 = Not Accelerating 1 = Accelerating
										x						Decel	0 = Not Decelerating 1 = Decelerating
									x							Alarm	0 = No Alarm (Par. 211 & 212) 1 = Alarm
								x								Fault	0 = No Fault (Par. 243) 1 = Fault
							x									At Speed	0 = Not At Reference 1 = At Reference
				x	x	x										Local Control (1)	000 = Port 0 (TB) 001 = Port 1 010 = Port 2 011 = Port 3 100 = Port 4 101 = Port 5 110 = Port 6 111 = No Local
x	x	x	x													Reference	0000 = Ref A Auto (Par. 90) 0001 = Ref B Auto (Par. 93) 0010 = Preset 2 Auto 0011 = Preset 3 Auto 0100 = Preset 4 Auto 0101 = Preset 5 Auto 0110 = Preset 6 Auto 0111 = Preset 7 Auto 1000 = Term Blk Manual 1001 = DPI 1 Manual 1010 = DPI 2 Manual 1011 = DPI 3 Manual 1100 = DPI 4 Manual 1101 = DPI 5 Manual 1110 = DPI 6 Manual 1111 = Jog Ref

(1) See 'Owners' in drive User Manual for further information.

PowerFlex 700S Drives

Logic Command Word (Phase II Control)

Logic Bits																Command	Description
15	14	13	12	11	10	9	8	7	6	5	4	3	2	1	0		
															x	Normal Stop	0 = Not Normal Stop 1 = Normal Stop
														x		Start (1)	0 = Not Start 1 = Start
													x			Jog 1	0 = Not Jog using [Jog Speed 1] (Par. 29) 1 = Jog using [Jog Speed 1] (Par. 29)
												x				Clear Fault (2)	0 = Not Clear Fault 1 = Clear Fault
										x	x					Unipolar Direction	00 = No Command 01 = Forward Command 10 = Reverse Command 11 = Hold Direction Control
									x							Reserved	
								x								Jog 2	0 = Not Jog using [Jog Speed 2] (Par. 39) 1 = Jog using [Jog Speed 2] (Par. 39)
							x									Current Limit Stop	0 = Not Current Limit Stop 1 = Current Limit Stop
						x										Coast Stop	0 = Not Coast to Stop 1 = Coast to Stop
					x											Reserved	
				x												Reserved	
			x													Spd Ref Sel0	
		x														Spd Ref Sel1	
	x															Spd Ref Sel2	
x																Reserved	

Bits			
14	13	12	
0	0	0	= Spd Ref A (Par. 27)
0	0	1	= Spd Ref B (Par. 28)
0	1	0	= Preset 2 (Par. 15)
0	1	1	= Preset 3 (Par. 16)
1	0	0	= Preset 4 (Par. 17)
1	0	1	= Preset 5 (Par. 18)
1	1	0	= Preset 6 (Par. 19)
1	1	1	= Preset 7 (Par. 20)

(1) A Not Stop condition (logic bit 0 = 0, logic bit 8 = 0, and logic bit 9 = 0) must first be present before a 1 = Start condition will start the drive.

(2) To perform this command, the value must switch from '0' to '1'.

Logic Status Word (Phase II Control)

Logic Bits																	
15	14	13	12	11	10	9	8	7	6	5	4	3	2	1	0	**Status**	**Description**
															x	Active	0 = Not Active 1 = Active
														x		Running	0 = Not Running 1 = Running
													x			Command Direction	0 = Reverse 1 = Forward
												x				Actual Direction	0 = Reverse 1 = Forward
											x					Accel	0 = Not Accelerating 1 = Accelerating
										x						Decel	0 = Not Decelerating 1 = Decelerating
									x							Jogging	0 = Not Jogging 1 = Jogging
								x								Fault	0 = No Fault (Par. 323, 324, 325) 1 = Fault
							x									Alarm	0 = No Alarm (Par. 326, 327, 328) 1 = Alarm
						x										Flash Mode	0 = Not in Flash Mode 1 = In Flash Mode
					x											Run Ready	0 = Not Ready to Run (Par. 156) 1 = Ready to Run
				x												At Limit (1)	0 = Not At Limit (Par. 304) 1 = At Limit
			x													Tach Loss Sw	0 = Not Tach Loss Sw 1 = Tach Loss Sw
		x														At Zero Spd	0 = Not At Zero Speed 1 = At Zero Speed
	x															At Setpt Spd	0 = Not At Setpoint Speed 1= At Setpoint Speed
x																Enable	0 = Not Enabled 1 = Enabled

(1) See Parameter 304 - [Limit Status] in the PowerFlex 700S drive User Manual for a description of the limit status conditions.

SMC Flex Controllers SMC-50 Controllers

Logic Status Word

Bit #																Status	Description
15	14	13	12	11	10	9	8	7	6	5	4	3	2	1	0		
															X	Enabled	1 — Control Power Applied 0 — No Control Power
														X		Running	1 — Power Applied to Motor 0 — Power **not** Applied to Motor
													X			Phasing	1 — ABC Phasing 0 — CBA Phasing
												X				Phasing Active	1 — 3-phase is valid 0 — No valid 3-phase detected
											X					Starting (Accel)	1 — Performing a Start Maneuver 0 — Not Performing a Start Maneuver
										X						Stopping (Decel)	1 — Performing a Stop Maneuver 0 — Not Performing a Stop Maneuver
									X							Alarm	1 — Alarm Present 0 — No Alarm Present
								X								Fault	1 — Fault Condition Exists 0 — No Fault Condition
							X									At Speed	1 — Full Voltage Applied 0 — Not Full Voltage Applied
						X										Start/ Isolation	1 — Start/Isolation Contactor Enabled 0 — Start/Isolation Contactor Disabled
					X											Bypass	1 — External Bypass Contactor Enabled 0 — External Bypass Contactor Disabled
				X												Ready	1 — Ready 0 — Not Ready
			X													Option 1 Input	1 — Input Active 0 — Input Inactive
		X														Option 2 Input	1 — Input Active 0 — Input Inactive
—																—	Bits 14 and 15 — Not Used

Logic Command Word (Control)

Bit #																Status	Description
15	14	13	12	11	10	9	8	7	6	5	4	3	2	1	0		
															X	Stop	1 — Stop/Inhibit 0 — No Action
														X		Start	1 — Start 0 — No Action
													X			Option #1 Input	1 — Stop Maneuver/Inhibit 0 — No Action
												X				Clear Faults	1 — Clear Faults 0 — No Action
											X					Option #2 Input	1 — Perform Option 2 function 0 — No Action
—																—	Bits 5…10 — Not Used
				X												Aux Enable	1 — Use Aux 1…Aux 4 0 — Ignore Aux 1…Aux 4
			X													Aux 1	1 — Aux 1 Active 0 — Aux 1 Inactive
		X														Aux 2	1 — Aux 2 Active 0 — Aux 2 Inactive
	X															Aux 3	1 — Aux 3 Active 0 — Aux 3 Inactive
X																Aux 4	1 — Aux 4 Active 0 — Aux 4 Inactive

A

Adapter

Devices such as drives, controllers, and computers usually require a network communication adapter to provide a communication interface between them and a network such as EtherNet/IP. An adapter reads data on the network and transmits it to the connected device. It also reads data in the device and transmits it to the network.

The 20-COMM-ER EtherNet/IP adapter connects PowerFlex 7-Class drives and SMC controllers to an EtherNet/IP network. Adapters are sometimes also called ‘cards’, ‘embedded communication options’, ‘gateways’, ‘modules’, or ‘peripherals’.

B

BOOTP (Bootstrap Protocol)

BOOTP lets the adapter configure itself dynamically at restart if the network has a BOOTP server. The BOOTP server assigns the adapter a preconfigured IP address, a subnet mask, and a gateway address; therefore, you do not have to configure these with the parameters in the adapter. BOOTP can make it easier to administer an Ethernet network. A **free version** of the Rockwell Software® BOOTP Server can be obtained at http://www.software.rockwell.com/support/download/detail.cfm?ID=3390.

Bridge

A network device that can route messages from one network to another. A bridge also refers to a communications module in a ControlLogix controller that connects the controller to a network. See also Scanner.

C

CIP (Common Industrial Protocol)

CIP is the transport and application layer protocol used for messaging over EtherNet/IP, ControlNet, and DeviceNet networks. The protocol is used for implicit messaging (real-time I/O) and explicit messaging (configuration, data collection, and diagnostics).

Connected Components Workbench Software

The recommended tool for monitoring and configuring Allen-Bradley products and network communication adapters. It can be used on computers running various Microsoft Windows operating systems. You can obtain a **free copy** of Connect Components Workbench software at http://www.ab.com/support/abdrives/webupdate/software.html.

ControlFLASH

A **free** software tool used to electronically update firmware of Allen-Bradley products and network communication adapters. ControlFLASH software is downloaded automatically when the firmware revision file for the product being

updated is downloaded from the Allen-Bradley updates website to your computer.

Controller

A controller, also called programmable logic controller, is a solid-state control system that has a user-programmable memory for storage of instructions to implement specific functions such as I/O control, logic, timing, counting, report generation, communication, arithmetic, and data file manipulation. A controller consists of a central processor, input/output interface, and memory. See also Scanner.

D

Data Rate

The speed at which data is transferred on the EtherNet/IP network. You can set the adapter to a data rate of 10 Mbps Full-Duplex, 10 Mbps Half-Duplex, 100 Mbps Full-Duplex, or 100 Mbps Half-Duplex. If another device on the network sets or auto-negotiates the data rate, you can set the adapter to automatically detect the data rate.

Datalinks

A Datalink is a type of pointer used by PowerFlex 7-Class drives and SMC controllers to transfer data to and from the controller. Datalinks allow specified parameters to be read or written to without using explicit messages. When enabled, each Datalink consumes either four bytes or eight bytes in both the input and output image table of the controller. The drive determines the size of Datalinks.

Device Level Ring (DLR)

A protocol that allows multiported EtherNet device to be connected in a ring topology, enabling broken ring connection detection and network reconfirmation to linear topology.

DLR Announce Frame

Data frame sent by the ring supervisor in a ring network to announce transition from linear to ring or ring to linear configuration.

DLR Beacon Frame

Data frame sent by the ring supervisor in a ring network used to lost connections that break the ring.

DLR Ring Supervisor

A node that sends beacon and announce frames on a ring network to monitor and maintain connectivity by re-configuring the ring while nodes are disconnected or reconnected.

DPI (Drive Peripheral Interface)

A second generation peripheral communication interface used by various Allen-Bradley drives and power products, such as PowerFlex 7-Class drives and SMC controllers. It is a functional enhancement to SCANport.

DPI Peripheral

A device that provides an interface between DPI and a network or user. Peripheral devices are also referred to as 'adapters' or 'modules'. The 20-COMM-ER adapter, 1203-USB or 1203-SSS converter, and PowerFlex 7-Class HIMs (20-HIM-xxx) are examples of DPI peripherals.

DPI Product

A device that uses the DPI communications interface to communicate with one or more peripheral devices. For example, a motor drive such as a PowerFlex 7-Class drive is a DPI product. In this manual, a DPI product is also referred to as 'drive' or 'host'.

DriveExplorer Software

A tool for monitoring and configuring Allen-Bradley products and network communication adapters. It can be used on computers running various Microsoft Windows operating systems. DriveExplorer software, version 3.xx or later, can be used to configure this adapter and PowerFlex drives. This software tool has been discontinued and is now available as **freeware** at http://www.ab.com/support/abdrives/webupdate/software.html. There are no plans to provide future updates to this tool and the download is being provided 'as-is' for users that lost their DriveExplorer CD, or need to configure legacy products not supported by Connected Components Workbench software.

DriveTools SP Software

A software suite designed for running on various Microsoft Windows operating systems. This software suite provides a family of tools, including DriveExecutive software (version 3.01 or later), that you can use to program, monitor, control, troubleshoot, and maintain Allen-Bradley products. DriveTools SP software can be used with PowerFlex 7-Class and PowerFlex 4-Class drives, and legacy drives that implement the SCANport communication interface. Information about DriveTools SP software can be accessed at http://www.ab.com/drives/drivetools.

Duplex

Duplex describes the mode of communication. 'Full-duplex' communication lets a device exchange data in both directions at the same time. 'Half-duplex' communication lets a device exchange data only in one direction at a time. The duplex used by the adapter depends on the type of duplex that other network devices, such as switches, support.

E

EDS (Electronic Data Sheet) Files

Simple text files that are used by network configuration tools to describe products so that you can easily commission them on a network. EDS files describe a product device type and revision. EDS files for many Allen-Bradley products can be found at http://www.ab.com/networks/eds.

EtherNet/IP Network

EtherNet/IP (Industrial Protocol) is an open producer-consumer communication network based on the Ethernet standard (IEEE 802.3), TCP/IP, UDP/IP, and CIP. Designed for industrial communication, both I/O and explicit messages can be transmitted over the network. Each device is assigned a unique IP address and transmits data on the network. The number of devices that an EtherNet/IP network can support depends on the class of IP address. For example, a network with a Class C IP address can have 254 nodes.

General information about EtherNet/IP and the EtherNet/IP specification are maintained by the Open DeviceNet Vendor's Association (ODVA). ODVA is online at http://www.odva.org.

Explicit Messaging

Explicit Messages are used to transfer data that does not require continuous updates. They are typically used to configure, monitor, and diagnose devices over the network.

F

Fault Action

A fault action determines how the adapter and connected drive act when a communication fault (for example, a disconnected cable) occurs or when the controller is switched out of run mode. The former uses a communication fault action, and the latter uses an idle fault action.

Fault Configuration

When communication is disrupted (for example, a cable is disconnected), the adapter and PowerFlex drive can respond with a user-defined fault configuration. The user sets the data that is sent to the drive using specific fault configuration parameters in the adapter. When a fault action parameter is set to use the fault

configuration data and a fault occurs, the data from these parameters is sent as the Logic Command, Reference, and/or Datalinks.

G

Gateway

A device on a network that connects an individual network to a system of networks. When a node needs to communicate with a node on another network, a gateway transfers the data between the two networks. You need to configure the address for the gateway device in the adapter if you want the adapter to communicate with devices that are not on its network.

H

Hardware Address

Each Ethernet device has a unique hardware address (sometimes called a MAC address) that is 48 bits. The address appears as six digits separated by colons (for example, xx:xx:xx:xx:xx:xx). Each digit has a value between 0 and 255 (0x00 and 0xFF). This address is assigned in the hardware and cannot be changed. It is required to identify the device if you are using a BOOTP server.

HIM (Human Interface Module)

A device that can be used to configure and control a drive. PowerFlex 7-Class HIMs (catalog number 20-HIM-xx) can be used to configure PowerFlex 7-Class drives and their connected peripherals.

Hold Last

When communication is disrupted (for example, a cable is disconnected), the adapter and PowerFlex drive can respond by holding last. Hold last results in the drive receiving the last data received via the network connection before the disruption. If the drive was running and using the Reference from the adapter, it will continue to run at the same Reference.

I

Idle Action

An idle action determines how the adapter and connected drive act when the controller is switched out of run mode.

I/O Data

I/O data, sometimes called ‘implicit messages’ or ‘input/output’, is time-critical data such as a Logic Command and Reference. The terms ‘input’ and ‘output’ are defined from the controller’s point of view. Output is produced by the controller and consumed by the adapter. Input is produced by the adapter and consumed by the controller.

IP Addresses

A unique IP address identifies each node on an EtherNet/IP network. An IP address consists of 32 bits that are divided into four segments of one byte each. It appears as four decimal integers separated by periods (xxx.xxx.xxx.xxx). Each 'xxx' can have a decimal value from 0 to 255. For example, an IP address could be 192.168.0.1.

An IP address has two parts: a network ID and a host ID. The class of network determines the format of the address.

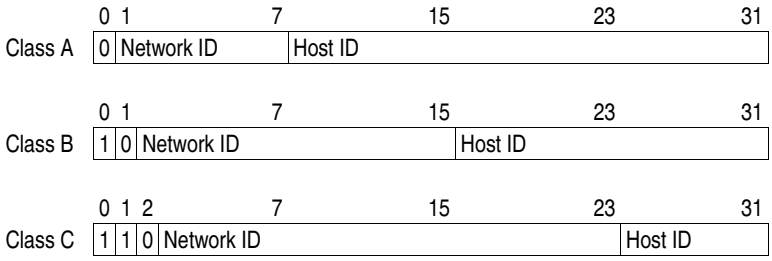

The number of devices on your EtherNet/IP network will vary depending on the number of bytes that are used for the network address. In many cases you are given a network with a Class C address, in which the first three bytes contain the network address (subnet mask = 255.255.255.0). This leaves 8 bits or 256 addresses on your network. Because two addresses are reserved for special uses (0 is an address for the network usually used by the router, and 255 is an address for broadcast messages to all network devices), you have 254 addresses to use on a Class C address block.

To ensure that each device on the Internet has a unique address, contact your network administrator or Internet Service Provider for unique fixed IP addresses. You can then set the unique IP address for the adapter by using a BOOTP server or by manually configuring parameters in the adapter. The adapter reads the values of these parameters only at powerup.

L

Logic Command/Logic Status

The Logic Command is used to control the PowerFlex 7-Class drive (for example, start, stop, and direction). It consists of one 16-bit word of output to the adapter from the network. The definitions of the bits in this word depend on the drive, and are shown in Appendix D.

The Logic Status is used to monitor the PowerFlex 7-Class drive (for example, operating state and motor direction). It consists of one 16-bit word of input from the adapter to the network. The definitions of the bits in this word depend on the drive, and are shown in Appendix D.

M

Master-Slave Hierarchy

An adapter configured for a master-slave hierarchy exchanges data with the master device. Usually, a network has one scanner which is the master device, and all other devices (for example, drives connected to EtherNet/IP adapters) are slave devices.

On a network with multiple scanners (called a multimaster hierarchy), each slave device must have a scanner specified as a master.

N

NVS (Nonvolatile Storage)

NVS is the permanent memory of a device. Devices such as the adapter and drive store parameters and other information in NVS so that they are not lost when the device loses power. NVS is sometimes called 'EEPROM'.

P

PCCC (Programmable Controller Communications Command)

PCCC is the protocol used by some controllers to communicate with devices on a network. Some software products (for example, DriveExplorer and DriveExecutive software) also use PCCC to communicate.

Peer-to-Peer Hierarchy

An adapter that is configured for a peer-to-peer hierarchy can exchange data with a device on the network that is not a scanner. This type of hierarchy can be set up so that a scanner configures or transmits data to one PowerFlex 7-Class drive which then sends the same configuration or data to other PowerFlex 7-Class drives on the network. To use a peer-to-peer hierarchy, you configure one adapter to transmit data (2 or 4 words) and one or more adapters to receive the data.

Ping

A message that is sent by a DPI product to its peripheral devices. They use the ping to gather data about the product, including whether it can receive messages and whether they can log in for control. On EtherNet/IP, a ping can be used to determine if a node exists.

PowerFlex 7-Class (Architecture Class) Drives

The Allen-Bradley PowerFlex 7-Class family of drives supports DPI and, at the time of publication, includes the PowerFlex 70, PowerFlex 700, PowerFlex 700H, PowerFlex 700S, PowerFlex 700L, and PowerFlex 7000 drives.

R

Reference/Feedback

The Reference is used to send a setpoint (for example, speed, frequency, and torque) to the drive. It consists of one word of output to the adapter from the

network. The size of the word (either a 16-bit word or 32-bit word) is determined by the drive.

Feedback is used to monitor the speed of the drive. It consists of one word of input from the adapter to the network. The size of the word (either a 16-bit word or 32-bit word) is determined by the drive.

RSLogix 5/500/5000 Software

RSLogix software is a tool for configuring and monitoring controllers to communicate with connected devices. It is a 32-bit application that runs on various Windows operating systems. Information about RSLogix software can be found at http://www.software.rockwell.com/rslogix.

S

Scanner

A scanner is a separate module (of a multi-module controller) or a built-in component (of a single-module controller) that provides communication with adapters connected to a network. See also Controller.

Status Indicators

LEDs that are used to report the status of the adapter, network, and drive. They are on the adapter and can be viewed on the front cover of the drive when the drive is powered.

Subnet Mask

An extension to the IP addressing scheme that lets you use a single network ID for multiple physical networks. A bit mask identifies the part of the address that specifies the network and the part of the address that specifies the unique node on the network. A ‘1’ in the subnet mask indicates the bit is used to specify the network. A ‘0’ in the subnet mask indicates that the bit is used to specify the node.

For example, a subnet mask on a network may appear as follows: 11111111 11111111 11111111 11000000 (255.255.255.192). This mask indicates that 26 bits are used to identify the network and 6 bits are used to identify devices on each network. Instead of a single physical Class C network with 254 devices, this subnet mask divides it into four networks with up to 62 devices each.

Switches

Network devices that provide virtual connections that help to control collisions and reduce traffic on the network. They are able to reduce network congestion by transmitting packets to an individual port only if they are destined for the connected device. In a control application, in which real time data access is critical, network switches may be required in place of hubs.

T

TCP (Transmission Control Protocol)

EtherNet/IP uses this protocol to transfer Explicit Messaging packets using IP. TCP guarantees delivery of data through the use of retries.

U

UDP (User Datagram Protocol)

EtherNet/IP uses this protocol to transfer I/O packets using IP. UDP provides a simple, but fast capability to send I/O messaging packets between devices. This protocol verifies that adapters transmit the most recent data because it does not use acknowledgements or retries.

UDDT (User-Defined Data Type)

A structure data type that you define during the development of an application (for example, to convert 32-bit REAL parameter data for written and read values to correctly display them in human readable format).

Update

The process of updating firmware in a device. The adapter and its connected PowerFlex 7-Class host drive and its peripherals can be updated using various Allen-Bradley software tools. See Updating the Adapter Firmware on page 44 for more information.

Z

Zero Data

When communication is disrupted (for example, a cable is disconnected), the adapter and drive can respond with zero data. Zero data results in the drive receiving zero as values for Logic Command, Reference, and Datalink data. If the drive was running and using the Reference from the adapter, it will stay running but at zero Reference.

A

adapter
- applying power **24**
- commissioning **26**
- compatible products **13**
- components **11**
- configuration tools **27**
- connecting to the drive **20**
- connecting to the network **23**
- definition **221**
- features **12**
- firmware updating **44**
- grounding **22**
- hardware address label **29**
- installation **17–26**
- IP address **29**, **32**
- mounting on the drive **22**
- parameters **171–179**
- resetting **43**
- specifications **169**
- using in a DPI External Comms Kit **167**
- viewing its status **44**
- web pages **153–??**

applying power to the adapter **24**
Assembly object **183**
attentions **15**

B

baud rate, *see data rate*
bit definitions of Logic Command/Status word for
- PowerFlex 70/700/700H drives **215**
- PowerFlex 700S drives **217**

BOOTP (Bootstrap Protocol)
- definition **221**
- disabling **32**
- free server application **221**
- using **29**

BOOTP parameter **171**
bridge **221**

C

cable, Ethernet **23**
cables
- DPI Internal Interface **20**, **21**

CIP (Common Industrial Protocol) **221**
classes of IP addresses **226**
Comm Flt Action parameter **174**
commissioning the adapter **26**
communications module, *see adapter*
compatible products **13**
components of the adapter **11**
configuration tools **27**
Connected Components Workbench software
- adapter configuration tool **14**, **27**
- definition/website **221**

connecting adapter to the
- drive **20**
- network **23**

ControlFLASH **221**
controller **222**
ControlLogix controller
- configuring the I/O **48**
- explicit messaging **108**
- using the I/O **88**

D

data rate
- definition **222**
- setting **34**

Datalink Size parameter **173**
Datalinks
- definition **222**
- in I/O image **80**
- using **86**

device-level ring (DLR)
- network example **23**

diagnostic items **146**
dimensions **170**
DPI
- connector on adapter **11**
- data rates **169**
- definition **223**
- Internal Interface cable **20**, **21**
- peripheral **223**
- products **13**, **223**

DPI Alarm object **206**
DPI Data Rate parameter **171**
DPI Device object **196**
DPI Diagnostic object **207**
DPI External Comms Kit - using adapter in **167**
DPI Fault object **204**

DPI I/O Act parameter **175**
DPI I/O Cfg parameter **174**
DPI Parameter object **198**
DPI Port parameter **171**
DPI Time object **209**
DriveExecutive software
  adapter configuration tool **14**, **27**
  definition/website **223**
DriveExplorer software
  adapter configuration tool **14**, **27**
  definition/website **223**
  free lite version **223**
drives, *see PowerFlex drives*
DriveTools SP software **223**
duplex communication mode
  definition **224**
  selecting **34**

E

EDS (Electronic Data Sheet) files **224**
EEPROM, *see Nonvolatile Storage (NVS)*
EMC Conformance **17**
EN Rate Act parameter **173**
EN Rate Cfg parameter **172**, **173**
environmental specifications **170**
equipment required **13**
Ethernet
  cable **23**
  connector on adapter **11**
Ethernet Link object **189**, **190**, **213**
EtherNet/IP
  data rates **169**
  example network for
    ControlLogix controller **48**
    MicroLogix 1100 controller **68**
  network definition **224**
  objects - list of **181**–??
  specification **224**
events
  clearing/viewing **149**
  list of **150**
explicit messaging
  about **106**
  configuring for
    ControlLogix controller **108**
    MicroLogix 1100/1400 controller **124**
  definition **224**
  performing **106**

F

fault action
  configuring the adapter for **41**
  definition **224**
fault configuration
  configuring the adapter for **42**
  definition **224**
faults, *see events*
features **12**
firmware revision **7**
firmware update
  definition **229**
  guidelines **44**
Flt Cfg A1-D2 In parameters **176**
Flt Cfg Logic parameter **175**
Flt Cfg Ref parameter **175**
full duplex, *see duplex*

G

gateway **225**
gateway address
  setting with BOOTP **29**
  setting with parameters **32**
Gateway Cfg 1-4 parameters **172**
grounding the adapter **22**

H

half duplex, *see duplex*
hardware address
  definition **225**
  in diagnostic item **148**
  on label **29**
HIM (Human Interface Module)
  accessing parameters with **28**
  definition **225**
  LCD model **28**
  LED model **28**

hold last
configuring the adapter for **41**
definition **225**
host IDs **226**

I

I/O
about **79**
configuring for
ControlLogix controller **48**
MicroLogix 1100/1400 controller **68**
configuring the adapter for **35**
definition **225**
understanding the I/O image **80**
using with
ControlLogix controller **88**
MicroLogix 1100/1400 controller **96**
PLC-5 controller **96**
SLC 500 controller **96**
Identity object **182**
idle action **225**
Idle Flt Action parameter **174**
installation
applying power to the adapter **24**
commissioning the adapter **26**
connecting to the drive **20**
connecting to the network **23**
preparing for **18**
Internal Interface cables
connecting to the adapter **21**
connecting to the drive **21**
illustration **21**
IP Addr Cfg 1-4 parameters **172**
IP address
definition/classes **226**
setting with BOOTP **29**
setting with parameters **32**

L

LCD HIM **28**
LED HIM **28**
LEDs, *see status indicators*
Link status indicator
troubleshooting with **145**
Logic Command/Status
bit definitions for
PowerFlex 70/700/700H drives **215**
PowerFlex 700S drives **217**
definition **226**
in I/O image for
ControlLogix controller **80**
PLC-5, SLC 500 or MicroLogix 1100 controllers **82**
using **84**

M

MAC address, *see hardware address*
manual
conventions **7**
related documentation **8**
website **8**
Master-Slave hierarchy
configuring adapter for **36**
definition **227**
mechanical dimensions **170**
messages, *see explicit messaging or I/O*
MicroLogix 1100/1400 controller
configuring the I/O **68**
explicit messaging **124**
limitations when using the I/O **68**
using the I/O **96**
mounting the adapter **22**
M-S Input parameter **176**
M-S Input parameter configurations **36**
M-S Output parameter **176**
M-S Output parameter configurations **36**

N

NET A status indicator
troubleshooting with **145**
NET B status indicator
locating **144**
network cable **23**
network IDs **226**
Network status indicator
troubleshooting with **145**
Non-Volatile Storage (NVS)
in adapter **27**
in drive **86**

Nonvolatile Storage (NVS)
definition **227**

O

objects - list of **181**–??
ODVA EtherNet/IP specification **224**

P

Parameter Group object **188**
Parameter object **185**
parameters
accessing **27**
convention **7**
list of **171**–**179**
numbering scheme **171**
restoring to factory-default settings **43**
PCCC (Programmable Controller Communications Command) **227**
PCCC object **190**
Peer A Input parameter **177**
Peer A Output parameter **179**
Peer B Input parameter **177**
Peer B Output parameter **179**
Peer Cmd Mask parameter **177**
Peer Flt Action parameter **177**
Peer Inp Addr 1-4 parameters **178**
Peer Inp Enable parameter **178**
Peer Inp Status parameter **178**
Peer Inp Timeout parameter **178**
Peer Out Enable parameter **179**
Peer Out Skip parameter **179**
Peer Out Time parameter **179**
Peer-to-Peer hierarchy
configuring adapter
to receive data **38**
to transmit data **37**
definition **227**
ping **227**
PLC-5 controller
limitations when using the I/O **68**
using the I/O **96**
PORT status indicator
locating **144**
troubleshooting with **144**
power consumption **169**
PowerFlex drives
compatible with adapter **13**
definition **227**
HIM **28**
installing adapter on **20**
preparing for an installation **18**
processor, *see controller*
programmable logic controller, *see controller*

Q

quick start **16**

R

Ref Adjust parameter **176**
Ref/Fdbk Size parameter **173**
Reference/Feedback
definition **227**
in I/O image for
ControlLogix controller **80**
PLC-5, SLC 500 or MicroLogix 1100 controllers **82**
setting an adjustment **41**
using **84**
Register object **184**
regulatory compliance **170**
related documentation **8**
requested packet interval **55**, **65**
Reset Module parameter **173**
ribbon cable, *see Internal Interface cable*
RSLinx Classic software
documentation **9**
using **47**
RSLogix 5/500/5000 software **228**

S

safety precautions **15**
scanner **228**
SLC 500 controller
limitations when using the I/O **68**
using the I/O **96**
specifications
adapter **169**
EtherNet/IP address **224**
EtherNet/IP subnet mask **228**

status indicators
definition **228**
Link **145**
NET A **145**
NET B **144**
Network **145**
normal operation **24**
PORT **144**
troubleshooting with **144**–??, **145**–??, **145**–??
understanding **143**
Subnet Cfg 1-4 parameters **172**
subnet mask
definition **228**
setting with BOOTP **29**
setting with parameters **32**
switches **228**

T

TCP (Transmission Control Protocol) **229**
TCP/IP Interface object **211**
technical support **8**
tools required **13**
troubleshooting **143**–**151**

U

UDDT (User-Defined Data Type) **229**
UDP (User Datagram Protocol) **229**

W

Web Enable parameter **179**
Web Features parameter **179**
web pages
enabling with parameter **42**
for the adapter **153**–??
website
BOOTP utility **221**
DriveExecutive software **223**
DriveExplorer software **223**
DriveTools SP software **223**
EDS files **224**
EtherNet/IP **224**
manuals **8**
ODVA (Open DeviceNet Vendor's Association) **224**
RSLogix 5/500/5000 software **228**
wiring, *see cable, Ethernet*

Z

zero data
configuring the adapter for **41**
definition **229**

U.S. Allen-Bradley Drives Technical Support - Tel: (1) 262.512.8176, Fax: (1) 262.512.2222, Email: support@drives.ra.rockwell.com, Online: www.ab.com/support/abdrives

www.rockwellautomation.com

Power, Control and Information Solutions Headquarters

Americas: Rockwell Automation, 1201 South Second Street, Milwaukee, WI 53204-2496 USA, Tel: (1) 414.382.2000, Fax: (1) 414.382.4444
Europe/Middle East/Africa: Rockwell Automation, Pegasus Park, De Kleetlaan 12a, 1831 Diegem, Belgium, Tel: (32) 2 663 0600, Fax: (32) 2 663 0640
Asia Pacific: Rockwell Automation, Level 14, Core F, Cyberport 3, 100 Cyberport Road, Hong Kong, Tel: (852) 2887 4788, Fax: (852) 2508 1846

Publication 20COMM-UM015B-EN-P - July 2013
Supercedes publication 20COMM-UM015A-EN-P — June 2013

Copyright © 2013 Rockwell Automation, Inc. All rights reserved. Printed in USA.

Product Data Sheet

H363NRB

Safety Switch , 100A, 600V, Fusible, Heavy Duty, 3-Pole

List Price	$1,158.00 USD
Availability	**Stock Item: This item is normally stocked in our distribution facility.**

Technical Characteristics

Width	8.50 Inches
Depth	6.38 Inches
Height	21.25 Inches
Wire Size	#12 to #1/0 AWG(Al) or #14 to #1/0 AWG(Cu)
Action	Single Throw
Ampere Rating	100A
Approvals	UL Listed
Catalog Reference Number	3100CT9801
Electrical Interlock	None
Enclosure Material	Galvannealed Steel
Enclosure Rating	NEMA 3R
Factory Installed Neutral	Yes
Enclosure Type	Rainproof and Sleet/Ice proof (Indoor/Outdoor)
Maximum Voltage Rating	600V
Disconnect Type	Fusible
Terminal Type	Lugs
Mounting Type	Surface
Type of Duty	Heavy Duty
Number of Poles	3-Pole
Short Circuit Current Rating	10kA (Class H or K) - 200kA (Class R,J or L)

Shipping and Ordering

Category	00009 - Safety Switch, Heavy Duty, 2 & 3 Pole, 30-200 Amp, Outdoor
Discount Schedule	DE1
Article Number	785901011576
Package Quantity	1
Weight	17.68 lbs.
Availability Code	Stock Item: This item is normally stocked in our distribution facility.
Returnability	Y

As standards, specifications, and designs change from time to time, please ask for confirmation of the information given in this document.

Generated: 06/18/2009 02:39:41

© 2009 Schneider Electric. All rights reserved.

Table 3.9: 600 Volts—Single Throw Fusible

System	Amperes	NEMA 1 Indoor		NEMA 3R Rainproof (Bolt-on Hubs, page 3-11)		NEMA 4, 4X, 5▲ 304 Stainless Steel (for 316 stainless, see page 3-7) Dust tight, Watertight, Corrosion Resistant (Watertight Hubs, page 3-11)		NEMA 12K With Knockouts (Watertight Hubs, page 3-11)		NEMA 12, 3R■ Without Knockouts (Watertight Hubs, page 3-11)		Horsepower Ratings♦ 480 Vac Std. (Using Fast Acting, One Time Fuses)	480 Vac Max. (Using Dual Element, Time Delay Fuses)	600 Vac Std. (Using Fast Acting, One Time Fuses)	600 Vac Max. (Using Dual Element, Time Delay Fuses)	dc▼	
		Cat. No.	$ Price	Cat. No.	$ Price	Cat. No.	$ Price	Cat. No.	$ Price	Cat. No.	$ Price	3Ø	3Ø	3Ø	3Ø	250	600
2-Wire (2 Blades and Fuseholders)—600 Vac, 600 Vdc																	
	30	Use three-wire devices for two-wire applications										—	—	—	—	—	—
	60											—	—	—	—	—	—
	100											—	—	—	—	—	—
	200											—	—	—	—	—	—
	400	H265	4206.00	H265R	5424.00	H265DS	14961.00	—	—	H265AWK	5025.00	100★	250★	—	—	50	50
	600	H266	6653.00	H266R	10686.00	H266DS	21399.00	—	—	H266AWK	7341.00	150★	400★	—	—	50	50
	800	H267	10365.00	H267R□	16385.00	—	—	—	—	H267AWK	15276.00	—	—	—	—	50	50
	1200	H268	14570.00	H268R□	17991.00	—	—	—	—	H268AWK	18044.00	—	—	—	—	50	50
3-Wire (3 Blades and Fuseholders)—600 Vac, 600 Vdc▼																	
	30	H361	528.00	H361RB	899.00	H361DS	2520.00	H361A	1014.00	H361AWK	956.00	5	15	7-1/2	20	5	15
	30	H361-2△	617.00	H3612RB△	1049.00	—	—	H361-2A△	1035.00	H3612AWK△	977.00	5	15	7-1/2	20	—	15
	60	H362	638.00	H362RB	1055.00	H362DS	2771.00	H362A	1047.00	H362AWK	984.00	15	30	15	50	—	30
	100	H363	1188.00	H363RB	1644.00	H363DS	5493.00	H363A	1626.00	H363AWK	1539.00	25	60	30	75	—	50
	200	H364	1707.00	H364RB	2259.00	H364DS	7685.00	H364A	2544.00	H364AWK	2400.00	50	125	60	150	40	50
	400	H365	4551.00	H365R	5532.00	H365DS	15321.00	—	—	H365AWK	5462.00	100	250	125	350	50	50
	600	H366	7649.00	H366R	10899.00	H366DS	21084.00	—	—	H366AWK	9203.00	150	400	200	500	50	50
	800	H367	13319.00	H367R □	16500.00	—	—	—	—	H367AWK	16352.00	200	500	250	500	50	50
	1200	H368	17507.00	H368R□	20009.00	—	—	—	—	H368AWK	19706.00	200	500	250	500	50	50
4-Wire (3 Blades and Fuseholders, 1 Neutral)—600 Vac, 600 Vdc▼																	
	30	H361N	617.00	H361NRB	986.00	Use three-wire devices field-installed solid neutral assemblies. Order separately. See page 3-12.						5	15	7-1/2	20	—	15
	60	H362N	710.00	H362NRB	1134.00							15	30	15	50	—	30
	100	H363N	1278.00	H363NRB	1737.00							25	60	30	75	—	50
	200	H364N	1869.00	H364NRB	2408.00	H364NDS	7871.00	H364NA	2715.00	H364NAWK	2558.00	50	125	60	150	40	50
	400	H365N	4898.00	H365NR	5765.00	H365NDS	15668.00	—	—	H365NAWK	5823.00	100	250	125	350	50	50
	600	H366N	8019.00	H366NR	11054.00	H366NDS	22122.00	—	—	H366NAWK	9600.00	150	400	200	500	50	50
	800	H367N	14043.00	H367NR□	17205.00	—	—	—	—	H367NAWK	17253.00	200	500	250	500	50	50
	1200	H368N	18114.00	H368NR□	20993.00	—	—	—	—	H368NAWK	20820.00	200	500	250	500	50	50
4-Wire (4 Blades and Fuseholders)—600 Vac, 600 Vdc◊												2Ø	2Ø	2Ø	2Ø		
	30	H461	914.00	—	—	H461DS	2937.00	—	—	H461AWK	1115.00	7-1/2	20	10	25	5	15
	60	H462	1065.00	—	—	H462DS	3069.00	—	—	H462AWK	1257.00	15	40	20	50	10	30
	100	H463	1778.00	—	—	H463DS	8345.00	—	—	H463AWK	1932.00	25	50	30	75	20	30
	200	H464	2957.00	—	—	H464DS	12596.00	—	—	H464AWK	3222.00	50	—	50	—	40	50
	400	H465	6210.00	—	—	—	—	—	—	H465AWK	6807.00	100	250	125	350	50	50
	600	H466	10104.00	—	—	—	—	—	—	—	—	150	400	200	500	50	50
6-Wire (6 Blades and Fuseholders)—600 Vac ◊												3Ø	3Ø	3Ø	3Ø		
	100	—	—	—	—	H663DS	25964.00	—	—	H663AWK	5112.00	25	60	30	75	—	—
	200	—	—	—	—	H664DS	35393.00	—	—	H664AWK	12222.00	For applications requiring motor disconnect capability, use electrical interlock. Refer to page 3-11.					

▲ Complete rating is NEMA 3, 3R, 4, 4X, 5 and 12.
■ Also suitable for NEMA 3R application by removing drain screw from bottom endwall.
♦ Refer to page 7-35 for additional motor application data. The starting current of motors of more than standard horsepower may require the use of fuses with appropriate time delay characteristics.
★ For corner grounded delta systems only and with neutral assembly installed. Use switching poles for ungrounded conductors.
▼ On 3P devices, use two outside poles for switching dc.
△ 60 A switch with 30 A fuse spacing and clips. Must use 60 A enclosure accessories including electrical interlocks.
□ Suitable for NEMA 5 applications with drain screw installed.
◊ Not suitable for use as service equipment.

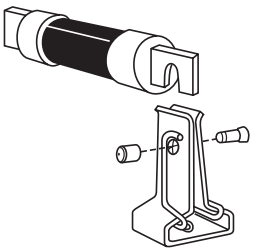

Class R Fuse

Class H Fuse Provisions:

Fusible Square D 30 through 600 A heavy duty safety switches accept Class H fuses as standard. With Class H fuses installed, the switch is UL Listed for use on systems with up to 10 kA available fault current.

Class R Fuse Provisions:

Fusible Square D 30–600 A heavy duty safety switches will accept Class R fuses as standard. A field-installed rejection kit is available which, when installed, rejects all but Class R fuses. With the installation of the rejection kit and Class R fuses, the switch is UL Listed for use on systems with up to 200 kA available fault current. See Class R fuse kits on page 3-11.

Class J Fuse Provisions:

Provisions for installing Class J fuses are included in 30 through 400 A 600 Volt, and 100 through 400 A 240 Volt, fusible heavy duty safety switches. Conversion to Class J fuse spacing requires relocating the load side fuse base assembly from the standard Class H fuse location to an alternate position as marked in the enclosure. With Class J fuses installed, the switch is UL Listed for use on systems with up to 200 kA available fault current. Switches rated 600 A, 240 or 600 Volt, require the addition of an adapter kit, H600J at **$456.** One kit per 3P switch.

Class L Fuse Provisions:

Fusible 800 A and 1200 A safety switches use Class L bolt-in fuses and are rated for use on systems with up to 200 kA at 600 Vac maximum. 1200 A switches accept class L fuses from 601–1200 A, 800 A switches accept class L fuses from 601–800 A.

Accessories: . . . . . pages 3-11 through 3-13
Dimensions: NEMA 1 and 3R . . . . . page 3-14
Dimensions: NEMA 4, 4X and 5 . . . . . page 3-15

© 2009 Schneider Electric
All Rights Reserved

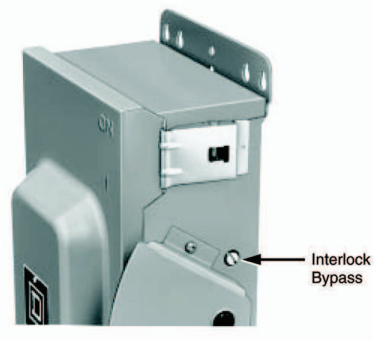

Fuse Pullers

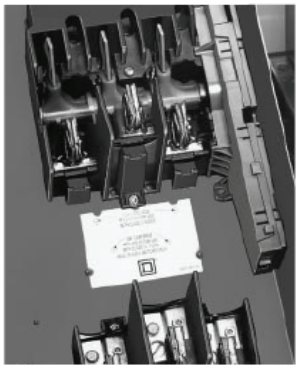

Class J Fuse Provisions
Alternate mounting holes make for easy conversion to Class J fuses.

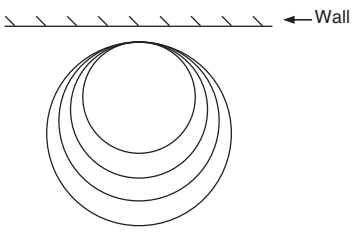

Tangential Knockouts

- Dual cover interlock keeps the cover closed when switch is ON. When the cover is open, it interlocks the switch OFF, unless the interlock is bypassed.
- Factory-installed fuse pullers on 30–100 A NEMA Types 4, 4X, and 5 stainless steel, NEMA Type 4X fiberglass reinforced polyester, Krydon and NEMA Types 12 or 12K switches. Available for field installation on 30–100 A F Series switches, NEMA Types 1 and 3R switches.
- Class J fuse provisions on 30 A–600 A, 600 V switches and 100–600 A, 240 V switches. 600 A devices require a mounting kit (catalog number H600J).
- 30–600 A switches are shipped with standard Class H fuse spacing. These switches will accept Class R fuses also. A field-installable rejection kit is available, which, when installed, rejects all but Class R fuses. See pages 23 through 26 for Class R fuse kits.
- Multiple padlock provision in OFF position (three padlocks).
- Lock-on provisions for factory or field modification.
- Tangential combination knockouts lessen the need for conduit offset bends.

Lock-off Provision with Optional Lock-off Guard Kit Installed

Enclosures

- NEMA Type 1 general purpose, indoor
- NEMA Type 3R rainproof, outdoor
- NEMA Types 4, 4X, 5 indoor or outdoor, watertight, dust-tight, and corrosion-resistant (Types 304 and 316 stainless steel)
- NEMA Type 4X indoor or outdoor, watertight and dust-tight, and corrosion-resistant (fiberglass reinforced polyester)
- NEMA Types 7 and 9 hazardous locations:
  - — Class I, Groups C and D
  - — Class II, Groups E, F and G
  - — Class III
- NEMA Types 12 and12K indoor, dust-tight, and drip-proof
  NEMA Type 12 has no knockouts (suitable for outdoor use)
  NEMA Type 12K provided with knockouts

© 2009 Schneider Electric
All Rights Reserved

Applications

Heavy duty safety switches are designed for the following applications:

- Commercial and industrial installations
- Up to 600 Vac or 600 V dc maximum
- Up to 200,000 rms symmetrical amperes short circuit current
- 30—1200 A
- Horsepower ratings
- Load-make, load-break rated for the switch current rating
- Two or three fusible switched poles with or without insulated, grounded neutral
- Four or six fusible switched poles, neutral not available
- Two or three non-fusible, switched poles with or without insulated, grounded neutral
- Four non-fusible switched poles, neutral not available
- Six non-fusible switched poles, neutral not available
- Tested and approved for seismic applications

Standards

Heavy duty safety switches are manufactured in accordance with these standards:

- UL98, Standard for Enclosed and Dead Front Switches. UL Listed under File E2875, or E154828
- NEMA Standards Publication KS1, Enclosed Switches
- Federal Specifications WS-865c for Type HD

© 2009 Schneider Electric
All Rights Reserved

Special Applications

- Rainproof Bolt-On Hubs
- Electrical Interlock Kits
  - — Available factory- or field-installed
  - — Pivot arm operates from switch mechanism, breaking the control circuit before the main switch blades break
  - — Switches with electrical interlocks installed are UL Listed
- Watertight Hubs
- Class R Fuse Kits
- Internal Barrier Kits
  - — Provide an additional barrier that helps prevent accidental contact with live parts
  - — Field-installed transparent barriers do not restrict visual inspection of the switch
  - — Barriers provide IEC529 IP2X “finger safe” protection when door of enclosed disconnect switch is open
  - — Convenient door allows use of test probes without accessing fuses
  - — Allows for replacement of fuses without removing barrier

  NOTE: Barrier can also be used with a skirt kit to enclose a panel mounted Type 9422 disconnect.
- Key Interlock Systems
  - — Factory-installed only
  - — Interlocks are used to prevent the authorized operator from making an unauthorized operation
  - — Not available on hazardous location devices (NEMA Types 7 or 9) or fiberglass reinforced polyester (NEMA Type 4X)
  - — UL Listed
- Lock-On Provisions
  - — Provision for one 3/8 in. hasp padlock is available factory-installed on NEMA Types 1, 3R, 4, 4X and 5 stainless steel and 12 switches
  - — This modification will allow the switch to be locked in the “ON” position
  - — UL Listed
- Special Paint
  - — Available painted with special safety colors: safety red, safety orange, safety yellow, safety green, safety blue, safety purple, black or white
  - — All colors comply with OSHA Standard 1910.144 and ANSI Specification Z535.1 for marking physical hazards
- Phenolic Legend Plate
  - — Available engraved and mounted on all heavy duty safety switches, except NEMA Types 7 and 9
  - — Legend engraved in 1/4 in. high white letters on black background
  - — Customer must provide legend
  - — UL Listed

© 2009 Schneider Electric
All Rights Reserved

Table 14: Accessories for Current Series Heavy Duty Safety Switches

Catalog Number	Series	Electrical Interlock (1 Contact)	Electrical Interlocks (2 Contacts)	Class R Kits	Solid Neutral (Al/Cu)	Solid Neutral (Cu Only)	Grounding Kit (Al)	Grounding Kit (Cu)	Fuse Puller	Receptacle Plugs
H100XFA	E1	N/A	N/A	N/A	100SN	N/A	Std.	Std.	N/A	N/A
H221A	F6	EIK031	EIK032	RFK03L	SN03	SN03C	GTK03	GTK03C	Std.	N/A
H221AWK	F6	EIK031	EIK032	RFK03L	SN03	SN03C	GTK03	GTK03C	Std.	N/A
H221DS	F6	EK3001	EK3002	HRK30	H60SN	H60SNC	PK3GTA1	PKO6GTC1	Std.	N/A
H221N	F5	EIK031	EIK032	RFK03L	Std.	SN03C	GTK03	GTK03C	FPK03	N/A
H221NRB	F5	EIK031	EIK032	RFK03L	Std.	SN03C	GTK03	GTK03C	FPK03	N/A
H222A	F6	EIK031	EIK032	RFK03L	SN03	SN03C	GTK03	GTK03C	Std.	N/A
H222AWK	F6	EIK031	EIK032	RFK03L	SN03	SN03C	GTK03	GTK03C	Std.	N/A
H222DS	F6	EIK3061	EIK3062	HRK60	H60SN	H60SNC	PK3GTA1	PKOGTC1	Std.	N/A
H222N	F5	EIK031	EIK032	RFK03L	Std.	SN03C	GTK03	GTK03C	FPK03	N/A
H222NRB	F5	EIK031	EIK032	RFK03L	Std.	SN03C	GTK03	GTK03C	FPK03	N/A
H223A	F6	EIK1	EIK2	RFK10	SN0610	SN0610C	GTK0610	GTK0610C	Std.	N/A
H223AWK	F6	EIK1	EIK2	RFK10	SN0610	SN0610C	GTK0610	GTK0610C	Std.	N/A
H223DS	F6	EIK10201	EIK10202	HRK1020	H100SN	H100SNC	PKOGTA2	PKOGTA2	Std.	N/A
H223N	F5	EIK1	EIK2	RFK10	Std.	SN0610C	GTK0610	GTK0610C	FPK0610	N/A
H223NRB	F5	EIK1	EIK2	RFK10	Std.	SN0610C	GTK0610	GTK0610C	FPK0610	N/A
H224A	F6	EIK10201	EIK10202	HRK1020	H200SN	H200SNC	PKOGTA2	PKOGTC2	N/A	N/A
H224AWK	F6	EIK10201	EIK10202	HRK1020	H200SN	H200SNC	PKOGTA2	PKOGTC3	N/A	N/A
H224DS	F6	EIK10201	EIK10202	HRK1020	H200SN	H200SNC	PKOGTA2	PKOGTC3	N/A	N/A
H224N	F5	EIK10201	EIK10202	HRK1020	Std.	H200SNC	PKOGTA2	PKOGTC3	N/A	N/A
H224NRB	F5	EIK10201	EIK10202	HRK1020	Std.	H200SNC	PKOGTA2	PKOGTC3	N/A	N/A
H225	E4	EIK40601	EIK40602	HRK4060	H600SN	H600SNC	PKOGTA2	PKOGTC2	N/A	N/A
H225AWK	E4	EIK40601	EIK40602	HRK4060	H600SN	H600SNC	PKOGTA2	PKOGTC2	N/A	N/A
H225DS	E2	EIK40601	EIK40602	HRK4060	H600SN	H600SNC	PKOGTA2	PKOGTC3	N/A	N/A
H225N	E4	EIK40601	EIK40602	HRK4060	Std.	H600SNC	PKOGTA2	PKOGTC3	N/A	N/A
H225NAWK	E4	EIK40601	EIK40602	HRK4060	H600SN	Std.	PKOGTA2	N/A	N/A	N/A
H225NDS	E4	EIK40601	EIK40602	HRK4060	H600SN	Std.	PKOGTA2	PKOGTC3	N/A	N/A
H225NR	E4	EIK40601	EIK40602	HRK4060	Std.	H600SNC	PKOGTA2	PKOGTC3	N/A	N/A
H225R	E4	EIK40601	EIK40602	HRK4060	H600SN	H600SNC	PKOGTA2	PKOGTC3	N/A	N/A
H225XKA	C2	N/A	N/A	N/A	225SNA	N/A	Std.	PKOGTC3	N/A	N/A
H226	E4	EIK40601	EIK40602	HRK4060	H600SN	H600SNC	PKOGTA2	PKOGTC3	N/A	N/A
H226AWK	E4	EIK40601	EIK40602	HRK4060	H600SN	H600SNC	PKOGTA2	PKOGTC3	N/A	N/A
H226DS	E4	EIK40601	EIK40602	HRK4060	H600SN	H600SNC	PKOGTA2	PKOGTC3	N/A	N/A
H226N	E4	EIK40601	EIK40602	HRK4060	Std.	H600SNC	PKOGTA2	PKOGTC3	N/A	N/A
H226AWK	E4	EIK40601	EIK40602	HRK4060	H600SN	N/A	PKOGTA2	N/A	N/A	N/A
H226NDS	E4	EIK40601	EIK40602	HRK4060	H600SN	N/A	PKOGTA2	N/A	N/A	N/A
H226NR	E4	EIK40601	EIK40602	HRK4060	Std.	H600SNC	PKOGTA2	N/A	N/A	N/A
H226R	E4	EIK40601	EIK40602	HRK4060	H600SN	H600SNC	PKOGTA2	N/A	N/A	N/A
H227	E4	EIK40601	EIK40602	N/A	H800SNE4	N/A	PKOGTA7	N/A	N/A	N/A
H227AWK	E4	EIK40601	EIK40602	N/A	H800SNE4	N/A	PKOGTA7	N/A	N/A	N/A
H227N	E4	EIK40601	EIK40602	N/A	Std.	N/A	PKOGTA7	N/A	N/A	N/A
H227NAWK	E4	EIK40601	EIK40602	N/A	Std.	N/A	PKOGTA7	N/A	N/A	N/A
H227NR	E4	EIK40601	EIK40602	N/A	Std.	N/A	PKOGTA7	N/A	N/A	N/A
H227R	E4	EIK40601	EIK40602	N/A	H800SNE4	N/A	PKOGTA7	N/A	N/A	N/A
H228	E4	EIK40601	EIK40602	N/A	H1200SNE4	N/A	PKOGTA8	N/A	N/A	N/A
H228AWK	E4	EIK40601	EIK40602	N/A	H1200SNE4	Std.	PKOGTA8	N/A	N/A	N/A
H228N	E4	EIK40601	EIK40602	N/A	Std.	N/A	PKOGTA8	N/A	N/A	N/A
H228NAWK	E4	EIK40601	EIK40602	N/A	Std.	N/A	PKOGTA8	N/A	N/A	N/A
H228NR	E4	EIK40601	EIK40602	N/A	Std.	N/A	PKOGTA8	N/A	N/A	N/A
H228R	E4	EIK40601	EIK40602	N/A	H1200SNE4	N/A	PKOGTA8	N/A	N/A	N/A
H265	E4	EIK40601	EIK40602	HRK4060	H600SN	H600SNC	PKOGTA2	PKOGTC3	N/A	N/A
H265AWK	E4	EIK40601	EIK40602	HRK4060	H600SN	H600SNC	PKOGTA2	PKOGTC3	N/A	N/A
H265DS	E4	EIK40601	EIK40602	HRK4060	H600SN	H600SNC	PKOGTA2	PKOGTC3	N/A	N/A
H265R	E4	EIK40601	EIK40602	HRK4060	H600SN	H600SNC	PKOGTA2	PKOGTC3	N/A	N/A
H266	E4	EIK40601	EIK40602	HRK4060	H600SN	H600SNC	PKOGTA2	PKOGTC3	N/A	N/A
H266A	E4	EIK40601	EIK40602	HRK4060	H600SN	H600SNC	PKOGTA2	PKOGTC3	N/A	N/A
H266AWK	E4	EIK40601	EIK40602	HRK4060	H600SN	H600SNC	PKOGTA2	PKOGTC3	N/A	N/A
H266DS	E4	EIK40601	EIK40602	HRK4060	H600SN	H600SNC	PKOGTA2	PKOGTC3	N/A	N/A
H266R	E4	EIK40601	EIK40602	HRK4060	H600SN	H600SNC	PKOGTA2	PKOGTC3	N/A	N/A
H267	E4	EIK40601	EIK40602	Std.	H800SNE4	N/A	PKOGTA7	N/A	N/A	N/A
H267AWK	E4	EIK40601	EIK40602	N/A	H800SNE4	N/A	PKOGTA7	N/A	N/A	N/A
H267NAWK	E4	EIK40601	EIK40602	N/A	H800SNE4	N/A	PKOGTA7	N/A	N/A	N/A
H267R	E4	EIK40601	EIK40602	N/A	Std.	N/A	PKOGTA7	N/A	N/A	N/A
H268	E4	EIK40601	EIK40602	N/A	H1200SNE4	N/A	PKOGTA7	N/A	N/A	N/A
H268AWK	E4	EIK40601	EIK40602	N/A	H1200SNE4	N/A	PKOGTA7	N/A	N/A	N/A
H268NAWK	E4	EIK40601	EIK40602	N/A	Std.	N/A	PKOGTA7	N/A	N/A	N/A
H268R	E4	EIK40601	EIK40602	N/A	H1200NE4	N/A	PKOGTA7	N/A	N/A	N/A
H321A	F6	EIK031	EIK032	RFK03L	SN03	SN03C	GTK03	GTK03C	Std.	N/A
H321AWK	F6	EIK031	EIK032	RFK03L	SN03	SN03C	GTK03	GTK03C	Std.	N/A
H321DS	F6	EIK3001	EIK3002	HRK30	H60SN	H60SNC	PK3GTA1	PKOGTC1	Std.	N/A
H321N	F5	EIK031	EIK032	RFK03L	Std.	SN03C	GTK03	GTK03C	FPK03	N/A
H321NRB	F5	EIK031	EIK032	RFK03L	Std.	SN03C	GTK03	GTK03C	FPK03	N/A

Continued on next page

© 2009 Schneider Electric
All Rights Reserved

Table 14: Accessories for Current Series Heavy Duty Safety Switches

Catalog Number	Series	Electrical Interlock (1 Contact)	Electrical Interlocks (2 Contacts)	Class R Kits	Solid Neutral (Al/Cu)	Solid Neutral (Cu Only)	Grounding Kit (Al)	Grounding Kit (Cu)	Fuse Puller	Receptacle Plugs
H322A	F6	EIK031	EIK032	RFK03L	SN03	SN03C	GTK03	Std.	Std.	N/A
H322AWK	F6	EIK031	EIK032	RFK03L	SN03	SN03C	GTK03	GTK03C	Std.	N/A
H322DS	F6	EK3061	EIK3062	HRK30	H60SN	H360SNC	PK3GTA1	GTK03C	Std.	N/A
H322N	F5	EIK031	EK032	RFK03L	Std.	SN03C	GTK03	PKO6GTC1	FPK03	N/A
H322NRB	F5	EIK031	EIK032	RFK03L	Std.	SN03C	GTK03	GTK03C	FPK03	N/A
H323A	F6	EIK1	EIK2	RFK10	SN0610	SN0610C	GTK0610	GTK0610C	Std.	N/A
H323AWK	F6	EIK1	EIK2	RFK10	SN0610	SN0610C	GTK0610	GTK0610C	Std.	N/A
H323DS	F6	EK10201	EIK10202	HRK1020	H100SN	H100SNC	PKOGTA2	PKOGTC2	Std.	N/A
H323N	F5	EIK1	EIK2	RFK10	Std.	SN0610C	GTK0610	GTK0610C	FPK0610	N/A
H323NRB	F5	EIK1	EIK2	RFK10	Std.	SN0610C	GTK0610	GTK0610C	FPK0610	N/A
H324A	F6	EK10201	EIK10202	HRK1020	H200SN	H200SNC	PKOGTA2	PKOGTC2	N/A	N/A
H324AWK	F6	EK10201	EIK10202	HRK1020	H200SN	H200SNC	PKOGTA2	PKOGTC2	N/A	N/A
H324DS	F6	EK10201	EIK10202	HRK1020	H200SN	H200SNC	PKOGTA2	PKOGTC2	N/A	N/A
H324N	F5	EK10201	EIK10202	HRK1020	Std.	H200SNC	PKOGTA2	PKOGTA2	N/A	N/A
H324NRB	F5	EK10201	EIK10202	HRK1020	Std.	H200SNC	PKOGTA2	PKOGTC2	N/A	N/A
H325	E4	EIK40601	EIK40602	HRK4060	H600SN	H600SNC	PKOGTA2	PKOGTC3	N/A	N/A
H325AWK	E4	EIK40601	EIK40602	HRK4060	H600SN	H600SNC	PKOGTA2	PKOGTC3	N/A	N/A
H325DS	E4	EIK40601	EIK40602	HRK4060	H600SN	H600SNC	PKOGTA2	PKOGTC3	N/A	N/A
H325N	E4	EIK40601	EIK40602	HRK4060	Std.	H600SNC	PKOGTA2	PKOGTC3	N/A	N/A
H325NAWK	E4	EIK40601	EIK40602	HRK4060	H600SN	Std.	PKOGTA2	PKOGTC3	N/A	N/A
H325NDS	E4	EIK40601	EIK40602	HRK4060	H600SN	Std.	PKOGTA2	PKOGTC3	N/A	N/A
H325NR	E4	EIK40601	EIK40602	HRK4060	Std.	H600SNC	PKOGTA2	PKOGTC3	N/A	N/A
H325R	E4	EIK40601	EIK40602	HRK4060	H600SN	H600SNC	PKOGTA2	PKOGTC3	N/A	N/A
H326	E1	EIK40601	EIK40602	HRK4060	H600SN	H600SNC	PKOGTA2	PKOGTC3	N/A	N/A
H326AWK	E2	EIK40601	EIK40602	HRK4060	H600SN	H600SNC	PKOGTA2	PKOGTC3	N/A	N/A
H326DS	E2	EIK40601	EIK40602	HRK4060	Std.	H600SNC	PKOGTA2	PKOGTC3	N/A	N/A
H326N	E4	EIK40601	EIK40602	HRK4060	H600SN	H600SNC	PKOGTA2	PKOGTC3	N/A	N/A
H326NAWK	E4	EIK40601	EIK40602	HRK4060	H600SN	Std.	PKOGTA2	PKOGTC3	N/A	N/A
H326NDS	E4	EIK40601	EIK40602	HRK4060	H600SN	Std.	PKOGTA2	PKOGTC3	N/A	N/A
H326NR	E4	EIK40601	EIK40602	HRK4060	Std.	H600SNC	PKOGTA2	PKOGTC3	N/A	N/A
H326R	E4	EIK40601	EIK40602	HRK4060	H600SN	H600SNC	PKOGTA2	PKOGTC3	N/A	N/A
H327	E4	EIK40601	EIK40602	N/A	H800SNE4	N/A	PKOGTA7	N/A	N/A	N/A
H327AWK	E4	EIK40601	EIK40602	HRK4060	H800SNE4	N/A	PKOGTA7	N/A	N/A	N/A
H327N	E4	EIK40601	EIK40602	HRK4060	Std.	N/A	PKOGTA7	N/A	N/A	N/A
H327NAWK	E4	EIK40601	EIK40602	HRK4060	Std.	N/A	PKOGTA7	N/A	N/A	N/A
H327NR	E4	EIK40601	EIK40602	HRK4060	Std.	N/A	PKOGTA7	N/A	N/A	N/A
H327R	E4	EIK40601	EIK40602	N/A	H800SNE4	N/A	PKOGTA7	N/A	N/A	N/A
H328	E4	EIK40601	EIK40602	N/A	H1200SNE4	N/A	PKOGTA8	N/A	N/A	N/A
H328AWK	E4	EIK40601	EIK40602	N/A	H1200SNE4	N/A	PKOGTA8	N/A	N/A	N/A
H328N	E4	EIK40601	EIK40602	N/A	Std.	N/A	PKOGTA8	N/A	N/A	N/A
H328NAWK	E4	EIK40601	EIK40602	N/A	Std.	N/A	PKOGTA8	N/A	N/A	N/A
H328NR	E4	EIK40601	EIK40602	N/A	Std.	N/A	PKOGTA8	N/A	N/A	N/A
H328R	E4	EIK40601	EIK40602	N/A	H1200SNE4	N/A	PKOGTA8	N/A	N/A	N/A
H361	F5	EIK031	EIK032	RFK060	SN03	SN03C	GTK03	GTK03C	FPK03	N/A
H361-2A	F6	EIK1	EIK2	RFK06	SN0610	SN0610C	GTK0610	GTK0610C	Std.	N/A
H361-2AWK	F6	EIK1	EIK2	RFK06	SN0610	SN0610C.	GTK0610	GTK0610C	Std.	N/A
H361A	F6	EIK031	EIK032	RFK03H	SN03	SN03C	GTK03	GTK03C	Std.	N/A
H361AWA	F7	EIK1	EIK2	RFK06	N/A	N/A	N/A	Std.	Std.	ACP3034BC
H361AWC	F7	EIK1	EIK2	RFK06	N/A	N/A	N/A	Std.	Std.	APJ3485
H361AWK	F6	EIK031	EIK032	RFK03H	SN03	H03C	GTK03	GTK03C	Std.	N/A
H361DF	F1	9999TC10	9999TC20	RKF06	H60SN	H60SNC	Std.	N/A	N/A	N/A
H361DS	F6	EK3001	EIK032	HRK30H	H60SN	H60SNC	PK3GTA1	PKOGTC1	N/A	N/A
H361DSWC	F7	EK3001	EIK032	HRK30H	N/A	N/A	N/A	Std.	Std.	APJ3485
H361DSWA	F7	K3001	EIK032	HRK30H	N/A	N/A	N/A	Std.	Std.	ACP3034BC
H361DX	F1	9999TC10	EIK2	RFK06	H60SN	H60SNC	Std.	N/A	Std.	N/A
H361N	F5	EIK031	EIK2	RFK03H	Std.	SN03C	GTK03	GTK03C	FPK03	N/A
H361NRB	F5	EIK031	EIK032	RFK03H	Std.	SN03C	GTK03	GTK03C	FPK03	N/A
H361RB	F5	EIK031	EIK0322	RFK03H	SN03	SN03C	GTK03	GTK03C	FPK03	N/A
H361WA	F6	EIK1	EIK2	RFK06	N/A	N/A	Std.	N/A	FPK0610	ACP3034BC
H361WC	F6	EIK1	EIK2	RFK06	SN0610	SN0610C	Std.	N/A	FPK0610	APJ3485
H362	F5	EIK1	EIK2	RFK06H	SN0610	SN0610C	GTK0610	GTK0610C	FPK0610	N/A
H362A	F6	EIK1	EIK2	RFK06H	SN0610	SN0610C	GTK0610	GTK0610C	Std.	N/A
H362AWA	F5	EIK1	EIK2	RFK06H	SN0610	SN0610C	GTK0610	GTK0610C	Std.	ACP6034BC
H362AWC	F5	EIK1	EIK2	RFK06H	SN0610	SN0610C	GTK0610	GTK0610C	Std.	APJ6485
H362AWH	F5	EIK1	EIK2	RFK06H	SN0610	SN0610C	GTK0610	GTK0610C	Std.	SD12781
H362AWK	F6	EIK1	EIK2	RFK06H	SN0610	SN0610C	GTK0610	GTK0610C	Std.	N/A
H362DF	F1	9999TC10	9999TC20	RFK06H	H60SN	H60SNC	Std.	N/A	Std.	N/A
H362DS	F6	EK3061	EK3062	HRK60H	H60SN	H60SNC	PK3GTA1	PKOGTC1	Std.	N/A
H362DSWA	F7	EK3061	EK3062	HRK60H	N/A	N/A	N/A	Std.	Std.	ACP6034BC
H362DSWK	F7	EK3061	EK3062	HRK60H	N/A	N/A	N/A	Std.	Std.	APJ6485
H362DS	F1	9999TC10	9999TC20	RFK06H	H60SN	H60SNC	Std.	N/A	Std.	N/A
H362N	F5	EIK1	EK032	RFK06H	Std.	SN0610C	GTK0610	GTK0610C	FPK0610	N/A

Continued on next page

SQUARE D
by Schneider Electric

© 2009 Schneider Electric
All Rights Reserved

Table 14: Accessories for Current Series Heavy Duty Safety Switches

Catalog Number	Series	Electrical Interlock (1 Contact)	Electrical Interlocks (2 Contacts)	Class R Kits	Solid Neutral (Al/Cu)	Solid Neutral (Cu Only)	Grounding Kit (Al)	Grounding Kit (Cu)	Fuse Puller	Receptacle Plugs
H362NRB	F5	EIK1	EIK2	RFK06H	Std.	SN0610C	GTK0610	GTK0610C	FPK0610	N/A
H362RB	F5	EIK1	EIK2	RFK06H	SN0610	SN0610C	GTK0610	GTK0610C	FPK0610	N/A
H362WA	F6	EIK1	EIK2	RFK06H	SN0610	SN0610C	GTK0610	GTK0610C	FPK0610	ACP6034BC
H362WC	F6	EIK1	EIK2	RFK06H	SN0610	SN0610C	GTK0610	GTK0610C	FPK0610	APJ6485
H362WH	F5	EIK1	EIK2	RFK06H	SN0610	SN0610C	GTK0610	GTK0610C	FPK0610	SD12781
H363	F5	EIK1	EIK2	RFK10	SN0610	SN0610C	GTK0610	GTK0610C	FPK0610	N/A
H363A	F6	EIK1	EIK2	RFK10	SN0610	SN0610C	GTK0610	GTK0610C	Std.	N/A
H363AWA	F6	EIK1	EIK2	RFK10	N/A	N/A	N/A	Std.	Std.	ACP1034CD
H363AWC	F6	EIK1	EIK2	RFK10	N/A	N/A	N/A	Std.	Std.	N/A
H363AWK	F6	EIK1	EIK2	RFK10	SN0610	SN0610C	GTK0610	GTK0610C	Std.	N/A
H363DF	F1	9999TC10	9999TC20	RFK10	SN0610	SN0610C	Std.	N/A	Std.	N/A
H363DS	F6	EK10201	EIK10202	HRK1020	H100SN	H100SNC	PKOGTA2	PKOGTC2	Std.	N/A
H363DSWA	F7	EK10201	EIK10202	HRK1020	N/A	N/A	N/A	Std.	Std.	ACP1034CD
H363DSWC	F7	EK10201	EIK10202	HRK1020	N/A	N/A	N/A	Std.	Std.	APJ10487
H363DX	F1	9999TC10	9999TC20	RFK10	SN0610	SN0610C	Std.	N/A	Std.	N/A
H363N	F5	EIK1	EIK2	RFK10	Std.	SN0610C	GTK0610	GTK0610C	FPK0610	N/A
H363NRB	F5	EIK1	EIK2	RFK10	Std.	SN0610C	GTK0610	GTK0610C	FPK0610	N/A
H363RB	F5	EIK1	EIK2	RFK10	SN0610	SN0610C	GTK0610	GTK0610C	FPK0610	N/A
H363WA	F6	EIK1	EIK2	RFK10	N/A	N/A	N/A	N/A	FPK0610	ACP1034CD
H363WC	F6	EIK1	EIK2	RFK10	N/A	N/A	N/A	N/A	FPK0610	APJ10487
H364	F5	EIK10201	EIK10202	HRK1020	N/A	N/A	PKOGTA2	PKOGTC2	N/A	N/A
H364A	F6	EIK10201	EIK10202	HRK1020	N/A	N/A	PKOGTA2	PKOGTC2	N/A	N/A
H364AWK	F6	EIK10201	EIK10202	HRK1020	N/A	N/A	PKOGTA2	PKOGTC2	N/A	N/A
H364DF	E1	9999R8	9999R9	HRK1020	N/A	N/A	Std.	N/A	N/A	N/A
H364DS	F6	EK10201	EK10202	HRK1020	N/A	N/A	PKOGTA2	PKOGTC2	N/A	N/A
H364N	F5	EK10201	EK10202	HRK1020	Std.	H200SNC	PKOGTA2	PKOGTC2	N/A	N/A
H364NA	F6	EK10201	EK10202	HRK1020	H200SN	Std.	PKOGTA2	PKOGTC2	N/A	N/A
H364NAWK	F6	EK10201	EK10202	HRK1020	H200SN	Std.	PKOGTA2	PKOGTC2	N/A	N/A
H364NDS	F6	EK10201	EK10202	HRK1020	H200SN	Std.	PKOGTA2	PKOGTC2	N/A	N/A
H364NRB	F5	EK10201	EK10202	HRK1020	Std.	H200SNC	PKOGTA2	PKOGTC2	N/A	N/A
H364RB	F5	EK10201	EK10202	HRK1020	N/A	N/A	PKOGTA2	PKOGTC2	N/A	N/A
H365	E4	EIK40601	EIK40602	HRK4060	H600SN	H600SNC	PKOGTA2	PKOGTC3	N/A	N/A
H365AWK	E4	EIK40601	EIK40602	HRK4060	H600SN	H600SNC	PKOGTA2	PKOGTC3	N/A	N/A
H365DS	E4	EIK40601	EIK40602	HRK4060	H600SN	H600SNC	PKOGTA2	PKOGTC3	N/A	N/A
H365N	E4	EIK40601	EIK40602	HRK4060	Std.	H600SNC	PKOGTA2	PKOGTC3	N/A	N/A
H365NAWK	E4	EIK40601	EIK40602	HRK4060	H600SN	Std.	PKOGTA2	PKOGTC3	N/A	N/A
H365NDS	E4	EIK40601	EIK40602	HRK4060	H600SN	Std.	PKOGTA2	PKOGTC3	N/A	N/A
H365NR	E4	EIK40601	EIK40602	HRK4060	Std.	H600SNC	PKOGTA2	PKOGTC3	N/A	N/A
H365R	E4	EIK40601	EIK40602	HRK4060	H600SN	H600SNC	PKOGTA2	PKOGTC3	N/A	N/A
H366	E4	EIK40601	EIK40602	HRK4060	H600SN	H600SNC	PKOGTA2	PKOGTC3	N/A	N/A
H366AWK	E4	EIK40601	EIK40602	HRK4060	H600SN	H600SNC	PKOGTA2	PKOGTC3	N/A	N/A
H366DS	E4	EIK40601	EIK40602	HRK4060	H600SN	H600SNC	PKOGTA2	PKOGTC3	N/A	N/A
H366N	E4	EIK40601	EIK40602	HRK4060	Std.	H600SNC	PKOGTA2	PKOGTC3	N/A	N/A
H366NAWK	E4	EIK40601	EIK40602	HRK4060	H600SN	Std.	PKOGTA2	PKOGTC3	N/A	N/A
H366NDS	E4	EIK40601	EIK40602	HRK4060	H600SN	Std.	PKOGTA2	PKOGTC3	N/A	N/A
H366NR	E4	EIK40601	EIK40602	HRK4060	Std.	H600SNC	PKOGTA2	PKOGTC3	N/A	N/A
H366R	E4	EIK40601	EIK40602	HRK4060	H600SN	H600SNC	PKOGTA2	PKOGTC3	N/A	N/A
H367	E4	EIK40601	EIK40602	N/A	H800SNE4	N/A	PKOGTA7	N/A	N/A	N/A
H367AWK	E4	EIK40601	EIK40602	N/A	H800SNE4	N/A	PKOGTA7	N/A	N/A	N/A
H367N	E4	EIK40601	EIK40602	N/A	Std.	N/A	PKOGTA7	N/A	N/A	N/A
H367NAWK	E4	EIK40601	EIK40602	N/A	Std.	N/A	PKOGTA7	N/A	N/A	N/A
H367NR	E4	EIK40601	EIK40602	N/A	Std.	N/A	PKOGTA7	N/A	N/A	N/A
H367R	E4	EIK40601	EIK40602	N/A	H800SNE4	N/A	PKOGTA7	N/A	N/A	N/A
H368	E4	EIK40601	EIK40602	N/A	H1200SNE4	N/A	PKOGTA8	N/A	N/A	N/A
H368AWK	E4	EIK40601	EIK40602	N/A	H1200SNE4	N/A	PKOGTA8	N/A	N/A	N/A
H368N	E4	EIK40601	EIK40602	N/A	Std.	N/A	PKOGTA8	N/A	N/A	N/A
H368NAWK	E4	EIK40601	EIK40602	N/A	Std.	N/A	PKOGTA8	N/A	N/A	N/A
H368NR	E4	EIK40601	EIK40602	N/A	Std.	N/A	PKOGTA8	N/A	N/A	N/A
H368R	E4	EIK40601	EIK40602	N/A	H1200SNE4	N/A	PKOGTA8	N/A	N/A	N/A
H461	F5	EIK1	EIK2	RFK06	N/A	N/A	GTK0610	GTK0610C	FPK0610	N/A
H461AWK	F6	EIK1	EIK2	RFK06	N/A	N/A	GTK0610	GTK0610C	Std.	N/A
H462	F5	EIK1	EIK2	RFK06H	N/A	N/A	GTK0610	GTK0610C	FPK0610	N/A
H462AWK	F6	EK3061	EIK2	RFK06H	N/A	N/A	GTK0610	GTK0610C	Std.	N/A
H462DS	F6	EIK1	EK3062	HRK30H	N/A	N/A	PK3GTA1	PKOGTC1	Std.	N/A
H463	F5	EIK1	EIK2	RFK10	N/A	N/A	GTK0610	GTK0610C	FPK0610	N/A
H463AWK	F6	EIK1	EIK2	RFK10	SN0610	SN0610C	GTK0610	GTK0610C	Std.	N/A
H463DS	F6	EK10201	EK10202	HRK1020	N/A	N/A	PKOGTA2	PKOGTC2	Std.	N/A
H464	F5	EK10201	EK10202	HRK1020	N/A	N/A	PKOGTA2	PKOGTC2	N/A	N/A
H464AWK	F6	EK10201	EK10202	HRK1020	N/A	N/A	PKOGTA2	PKOGTC2	N/A	N/A
H464DS	F6	EK10201	EK10202	HRK1020	N/A	N/A	PKOGTA2	PKOGTC2	N/A	N/A
H465	E4	EIK40601	EIK40602	HRK4060	N/A	N/A	PKOGTA2	PKOGTC3	N/A	N/A
H465AWK	E4	EIK40601	EIK40602	HRK4060	N/A	N/A	PKOGTA2	PKOGTC3	N/A	N/A

Continued on next page

© 2009 Schneider Electric
All Rights Reserved

Table 20: 100 A Heavy Duty Ratings

Catalog Number	Series	120 Vac		240 Vac				480 Vac				600 Vac				Vdc			240 Vac		480 Vac		600 Vac	
		Std.	Max.	Std.		Max.		Std.		Max.		Std.		Max.		Max. hp Ratings			Std.	Max.	Std.	Max.	Std.	Max.
		1Ø	1Ø	1Ø	3Ø	1Ø	3Ø	1Ø	3Ø	1Ø	3Ø	1Ø	3Ø	1Ø	3Ø	125	250	600	2Ø	2Ø	2Ø	2Ø	2Ø	2Ø
H223DS	F6	—	—	7-1/2	—	15	—	—	—	—	—	—	—	—	—	—	20	—	—	—	—	—	—	—
H223AWK	F6	—	—	7-1/2[1]	15[2]	15[1]	30[2]	—	—	—	—	—	—	—	—	—	20[3]	—	—	—	—	—	—	—
H223A	F6	—	—	7-1/2[1]	15[2]	15[1]	30[2]	—	—	—	—	—	—	—	—	—	20[3]	—	—	—	—	—	—	—
H223N	F5	—	—	7-1/2[1]	15[2]	15[1]	30[2]	—	—	—	—	—	—	—	—	—	20[3]	—	—	—	—	—	—	—
H223NRB	F5	—	—	7-1/2[1]	15[2]	15[1]	30[2]	—	—	—	—	—	—	—	—	—	20[3]	—	—	—	—	—	—	—
H323DS	F6	—	—	—	15	—	30	—	—	—	—	—	—	—	—	—	20	—	—	—	—	—	—	—
H323A	F6	—	—	7-1/2[1]	15[2]	15[1]	30[2]	—	—	—	—	—	—	—	—	—	20[3]	—	—	—	—	—	—	—
H323AWK	F6	—	—	7-1/2[1]	15[2]	15[1]	30[2]	—	—	—	—	—	—	—	—	—	20[3]	—	—	—	—	—	—	—
H323N	F5	—	—	7-1/2[1]	15[2]	15[1]	30[2]	—	—	—	—	—	—	—	—	—	20[3]	—	—	—	—	—	—	—
H323NRB	F5	—	—	7-1/2[1]	15[2]	15[1]	30[2]	—	—	—	—	—	—	—	—	—	20[3]	—	—	—	—	—	—	—
H363	F5	—	—	—	—	—	—	10[1]	25[2]	30[1]	60[2]	—	30	—	75	—	50	30	—	—	—	—	—	—
H363RB	F5	—	—	—	—	—	—	10[1]	25[2]	30[1]	60[2]	—	30	—	75	—	50	30	—	—	—	—	—	—
H363DS	F6	—	—	—	—	—	—	—	25	—	60	—	30	—	75	—	—	30	—	—	—	—	—	—
H363A	F6	—	—	—	—	—	—	10[1]	25[2]	30[1]	60[2]	—	30	—	75	—	50	30	—	—	—	—	—	—
H363AWK	F6	—	—	—	—	—	—	10[1]	25[2]	30[1]	60[2]	—	30	—	75	—	50	30	—	—	—	—	—	—
H363N	F5	—	—	—	—	—	—	10[1]	25[2]	30[1]	60[2]	—	30	—	75	—	50	30	—	—	—	—	—	—
H363NRB	F5	—	—	—	—	—	—	10[1]	25[2]	30[1]	60[2]	—	30	—	75	—	50	30	—	—	—	—	—	—
H463	F5	—	—	—	15	—	30	—	25	—	60	—	30	—	75	—	20[3]	30	7-1/2	20	15	40	20	50
H463DS	F6	—	—	—	—	—	—	—	—	—	—	—	—	—	—	—	—	—	—	—	—	—	—	—
H463AWK	F6	—	—	—	15	—	30	—	25	—	60	—	30	—	75	—	20[3]	30	7-1/2	20	15	40	20	50
H663DS	F6	—	—	—	—	—	—	—	—	—	—	—	—	—	—	—	—	—	—	—	—	—	—	—
H663AWK	F6	—	—	—	15	—	30	—	25	—	60	—	30	—	75	—	—	—	—	—	—	—	—	—
HU363	F5	—	7-1/2	—	—	20[1]	40[2 6]	—	—	40[1]	75[5 6]	—	—	40[1]	75[6]	7-1/2	20	50	—	—	—	—	—	—
HU363RB	F5	—	7-1/2	—	—	20[1]	40[2 6]	—	—	40[1]	75[5 6]	—	—	40[1]	75[6]	7-1/2	20	50	—	—	—	—	—	—
HU363DS	F6	—	10[1]	—	—	15[1]	40[4]	—	—	30[1]	75	—	—	40[1]	75[4]	10	20	—	—	—	—	—	—	—
HU363A	F6	—	7-1/2	—	—	20[1]	40[2 6]	—	—	40[1]	75[5 6]	—	—	40[1]	75[6]	7-1/2	20	50	—	—	—	—	—	—
HU363AWK	F6	—	7-1/2	—	—	20[1]	40[2 6]	—	—	40[1]	75[5 6]	—	—	40[1]	75[6]	7-1/2	20	50	—	—	—	—	—	—
HU463	F5	—	—	—	—	—	40	—	—	—	75	—	—	—	75	—	20	30	—	30	—	50	—	50
HU463DS	F6	—	—	—	—	—	40	—	—	—	75	—	—	—	75	—	20	30	—	30	—	50	—	50
HU463AWK	F6	—	—	—	—	—	40	—	—	—	75	—	—	—	75	—	20	30	—	30	—	50	—	50
HU663DS	F6	—	—	—	—	—	40	—	—	—	75	—	—	—	75	—	—	—	—	—	—	—	—	—
HU663AWK	F6	—	—	—	—	—	40	—	—	—	75	—	—	—	75	—	—	—	—	—	—	—	—	—

1 Use both outer switching poles.

2 For corner grounded delta only, install neutral and use switching poles for ungrounded conductors.

3 Standard hp rating.

4 Use 75°C No. 1 copper conductor only.

5 60 hp maximum on corner grounded delta.

6 Use 75°C N.O. 4 Cu or N.O. 2 Al conductors.

© 2009 Schneider Electric
All Rights Reserved

Table 21: 200 A Heavy Duty Ratings

Catalog Number	Series	120 Vac		240 Vac				480 Vac				600 Vac				Vdc			240 Vac		480 Vac		600 Vac	
		Std.	Max.	Std.		Max.		Std.		Max.		Std.		Max.		Max. hp Ratings			Std.	Max.	Std.	Max.	Std.	Max.
		1Ø	1Ø	1Ø	3Ø	1Ø	3Ø	1Ø	3Ø	1Ø	3Ø	1Ø	3Ø	1Ø	3Ø	125	250	600	2Ø	2Ø	2Ø	2Ø	2Ø	2Ø
H224DS	F6	—	—	15	—	—	—	—	—	—	—	—	—	—	—	—	40	—	—	—	—	—	—	—
H224A	F6	—	—	15	—	—	—	—	—	—	—	—	—	—	—	—	40	—	—	—	—	—	—	—
H224AWK	F6	—	—	15	—	—	—	—	—	—	—	—	—	—	—	—	40	—	—	—	—	—	—	—
H224N	F5	—	—	15[1,2]	25	—	60	—	—	—	—	—	—	—	—	—	40	—	—	—	—	—	—	—
H224NRB	F5	—	—	—	25	15[1,2]	60	—	—	—	—	—	—	—	—	—	40	—	—	—	—	—	—	—
H324DS	F6	—	—	—	25	—	60	—	—	—	—	—	—	—	—	—	40	—	—	—	—	—	—	—
H324A	F6	—	—	—	25	—	60	—	—	—	—	—	—	—	—	—	40	—	—	—	—	—	—	—
H324AWK	F6	—	—	—	25	—	60	—	—	—	—	—	—	—	—	—	40	—	—	—	—	—	—	—
H324N	F5	—	—	—	25	—	60	—	—	—	—	—	—	—	—	—	40	—	—	—	—	—	—	—
H324NRB	F5	—	—	—	25	—	60	—	—	—	—	—	—	—	—	—	40	—	—	—	—	—	—	—
H364	F6	—	—	—	—	—	—	—	50	—	125	—	60	—	150	—	—	50	—	—	—	—	—	—
H364RB	F5	—	—	—	—	—	—	—	50	—	125	—	60	—	150	—	—	50	—	—	—	—	—	—
H364DS	F6	—	—	—	—	—	—	—	50	—	125	—	60	—	150	—	—	50	—	—	—	—	—	—
H364A	F6	—	—	—	—	—	—	—	50	—	125	—	60	—	150	—	—	50	—	—	—	—	—	—
H364AWK	F6	—	—	—	—	—	—	—	50	—	125	—	60	—	150	—	—	50	—	—	—	—	—	—
H364N	F6	—	—	—	—	—	—	—	50	—	125	—	60	—	150	—	—	50	—	—	—	—	—	—
H364NRB	F5	—	—	—	—	—	—	—	50	—	125	—	60	—	150	—	—	50	—	—	—	—	—	—
H464	F5	—	—	—	—	—	—	—	—	—	—	—	—	—	—	—	—	—	—	—	50	50	50	50
H464DS	F6	—	—	—	—	—	—	—	—	—	—	—	—	—	—	—	—	—	—	—	50	50	50	50
H464AWK	F6	—	—	—	—	—	—	—	—	—	—	—	—	—	—	—	—	—	—	—	50	50	50	50
H664DS	F6	—	—	—	—	—	—	—	—	—	—	—	—	—	—	—	—	—	—	—	—	—	—	—
H664AWK	F6	—	—	—	—	—	—	—	—	—	—	—	—	—	—	—	—	—	—	—	—	—	—	—
HU364	F5	—	—	—	—	—	60	—	—	—	125	—	—	—	150	—	40	50	—	—	—	—	—	—
HU364RB	F5	—	—	—	—	—	60	—	—	—	125	—	—	—	150	—	40	50	—	—	—	—	—	—
HU364DS	F6	—	—	—	—	—	—	—	—	—	125	—	—	—	150	—	40	50	—	—	—	—	—	—
HU364A	F6	—	—	—	—	—	60	—	—	—	125	—	—	—	150	—	40	50	—	—	—	—	—	—
HU364AWK	F6	—	—	—	—	—	60	—	—	—	125	—	—	—	150	—	40	50	—	—	—	—	—	—
HU464	F5	—	—	—	—	—	—	—	—	—	—	—	—	—	—	—	—	—	—	50	—	50	—	50
HU464DS	F6	—	—	—	—	—	—	—	—	—	—	—	—	—	—	—	—	—	—	50	—	50	—	50
HU463AWK	F6	—	—	—	—	—	—	—	—	—	—	—	—	—	—	—	—	—	—	50	—	50	—	50
HU664DS	F6	—	—	—	—	—	75	—	—	—	150	—	—	—	150	—	—	—	—	—	—	—	—	—
HU664AWK	F6	—	—	—	—	—	75	—	—	—	150	—	—	—	150	—	—	—	—	—	—	—	—	—

© 2009 Schneider Electric
All Rights Reserved

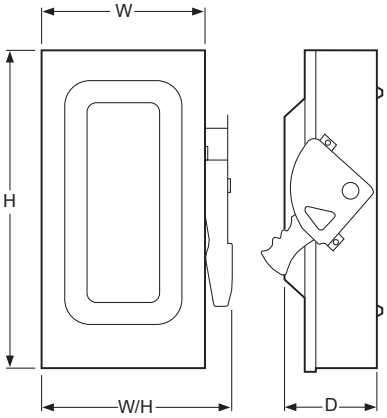

Typical NEMA Type 1

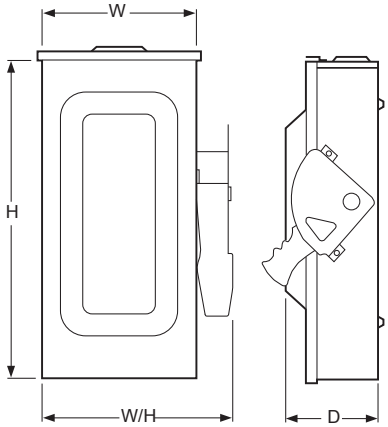

Typical NEMA Type 3R

Table 28: Dimensions

Catalog Number	Series	Approximate Dimensions							
		H		W		W/H		D	
		in.	mm	in.	mm	in.	mm	in.	mm
H221N	F5	14.60	371	6.50	165	7.55	192	4.88	124
H221NRB		14.88	378	6.63	168	7.55	192	4.88	124
H222N		14.60	371	6.50	165	7.55	192	4.88	124
H222NRB		14.88	378	6.63	168	7.55	192	4.88	124
H223N	F5	21.25	540	8.50	216	10.50	267	6.38	162
H223NRB		21.25	540	8.50	216	10.50	267	6.38	162
H224N		29.00	737	17.13	435	18.50	470	8.25	210
H224NRB		29.25	743	17.25	438	18.63	473	8.50	216
H225, N	E4	50.25	1276	27.63	702	27.63	702	10.13	257
H225NR, R		50.31	1278	27.88	708	27.88	708	10.13	257
H226, N		50.25	1276	27.63	702	27.63	702	10.13	257
H226NR, R		50.31	1278	27.88	708	27.88	708	10.13	257
H227, N	E4	69.13	1756	36.62	930	36.62	930	17.75	451
H227NR, R		69.13	1756	36.62	930	36.62	930	17.75	451
H228, N		69.13	1756	36.62	930	36.62	930	17.75	451
H228NR, R		69.13	1756	36.62	930	36.62	930	17.75	451
H265	E4	50.25	1276	27.63	702	27.63	702	10.13	257
H265R		50.31	1278	27.88	708	27.88	708	10.13	257
H266		50.25	1276	27.63	702	27.63	702	10.13	257
H266R		50.31	1278	27.88	708	27.88	708	10.13	257
H267	E4	69.13	1756	36.62	930	36.62	930	17.75	451
H267R		69.13	1756	36.62	930	36.62	930	17.75	451
H268		69.13	1756	36.62	930	36.62	930	17.75	451
H268R		69.13	1756	36.62	930	36.62	930	17.75	451
H321N	F5	14.60	371	6.50	165	7.55	192	4.88	124
H321NRB		14.88	378	6.63	168	7.55	192	4.88	124
H322N		14.60	371	6.50	165	7.55	192	4.88	124
H322NRB		14.88	378	6.63	168	7.55	192	4.88	124
H323N	F5	21.25	540	8.50	216	10.50	267	6.38	162
H323NRB		21.25	540	8.50	216	10.50	267	6.38	162
H324N		29.00	737	17.13	435	18.50	470	8.25	210
H324NRB		29.25	743	17.25	438	18.63	473	8.50	216
H325, N	E4	50.25	1276	27.63	702	27.63	702	10.13	257
H325R, NR		50.31	1278	27.88	708	27.88	708	10.13	257
H326, N		50.25	1276	27.63	702	27.63	702	10.13	257
H326R, NR		50.31	1278	27.88	708	27.88	708	10.13	257
H327, N	E4	69.13	1756	36.62	930	36.62	930	17.75	451
H327R, NR		69.13	1756	36.62	930	36.62	930	17.75	451
H328, N		69.13	1756	36.62	930	36.62	930	17.75	451
H328R, NR		69.13	1756	36.62	930	36.62	930	17.75	451
H361, N	F5	14.60	371	6.50	165	7.55	192	4.88	124
H361-2		17.50	445	9.00	229	10.50	267	6.38	162
H361NRB, RB		14.88	378	6.63	168	7.55	192	4.88	124
H361WA	F6	18.19	462	9.00	229	10.50	267	6.81	173
H361WC		18.19	462	9.00	229	10.50	267	6.81	173
H362, N	F5	17.50	445	9.00	229	10.50	267	6.38	162
H362NRB, RB		17.50	445	9.00	229	10.50	267	6.38	162
H362WA	F6	18.19	462	9.00	229	10.50	267	6.81	173
H362WC		16.75	425	9.00	229	10.50	267	7.00	178
H362WH	F5	18.19	462	9.00	229	10.50	267	6.81	173
H363, N		21.25	540	8.50	216	10.50		6.38	162
H363NRB, RB		21.25	540	8.50	216	10.50		6.38	162
H363WA	F6	21.85	462	9.00	229	10.50	267	6.81	173
H363WC		21.85	555	9.00	229	10.50	267	6.81	173

SQUARE D
by Schneider Electric

© 2009 Schneider Electric
All Rights Reserved

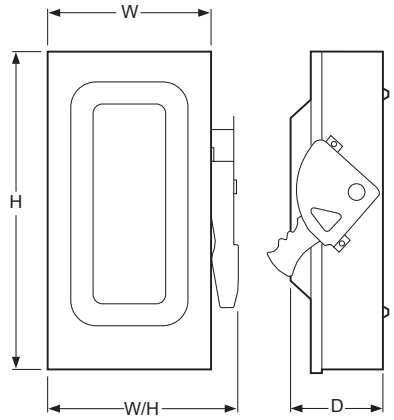

Typical NEMA Type 1

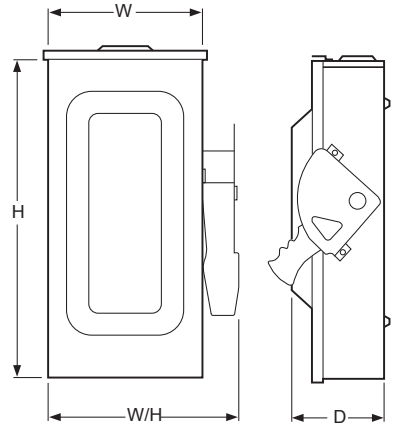

Typical NEMA Type 3R

Table 29: Dimensions

Catalog Number	Series	Approximate Dimensions							
		H		W		W/H		D	
		in.	mm	in.	mm	in.	mm	in.	mm
H364	F5	29.00	737	17.13	435	18.50	470	8.25	210
H364N		29.00	737	17.13	435	18.50	470	8.25	210
H364NRB		29.25	743	17.25	438	18.63	473	8.50	216
H364RB		29.25	743	17.25	438	18.63	473	8.50	216
H365, N	E4	50.25	1276	27.63	702	27.63	702	10.13	257
H365R, NR		50.31	1278	27.88	708	27.88	708	10.13	257
H366, N		50.25	1276	27.63	702	27.63	702	10.13	257
H366NR, R		50.31	1278	27.88	708	27.88	708	10.13	257
H367, N	E4	69.13	1756	36.62	930	36.62	930	17.75	451
H367NR, R		69.13	1756	36.62	930	36.62	930	17.75	451
H368, N		69.13	1756	36.62	930	36.62	930	17.75	451
H368NR, R		69.13	1756	36.62	930	36.62	930	17.75	451
H461	F5	20.50	521	14.75	375	16.13	410	17.75	451
H462		20.50	521	14.75	375	16.13	410	17.75	451
H463		20.50	521	14.75	375	16.13	410	17.75	451
H464		29.00	737	23.25	591	24.88	632	8.75	222
H465	E4	50.25	1276	33.88	861	33.88	861	10.13	257
H466		50.31	1278	27.88	708	27.88	708	10.13	257
HU265		50.25	1276	27.63	702	27.63	702	10.13	257
HU265R		50.31	1278	27.88	708	27.88	708	10.13	257
HU266	E4	50.25	1276	27.63	702	27.63	702	10.13	257
HU266R		50.31	1278	27.88	708	27.88	708	10.13	257
HU267		69.13	1756	36.62	930	36.62	930	17.75	451
HU267R		69.13	1756	36.62	930	36.62	930	17.75	451
HU268	E4	69.13	1756	36.62	930	36.62	930	17.75	451
HU268R		69.13	1756	36.62	930	36.62	930	17.75	451
HU361	F5	14.60	371	6.50	165	7.55	192	4.88	124
H361RB		14.88	378	6.63	168	7.55	192	4.88	124
HU362	F5	17.75	445	9.00	229	10.50	267	6.38	162
HU362RB		21.25	540	8.50	216	10.50	267	6.38	162
HU362WH		21.25	540	8.50	216	10.50	267	6.38	162
HU363		21.25	540	8.50	216	10.50	267	6.38	162
HU363RB	F5	21.25	540	8.50	216	10.50	267	6.38	162
HU364		29.00	737	17.13	435	18.50	470	8.25	210
HU364RB		29.25	743	17.25	438	18.63	473	8.50	216
HU365	E4	50.25	1276	27.63	702	2763	702	10.13	257
HU365R		50.31	1278	27.88	708	27.88	708	10.13	257
HU366		50.25	1276	27.63	702	27.63	702	10.13	257
HU366R		50.31	1278	27.88	708	27.88	708	10.13	257
HU367		69.13	1756	36.62	930	36.62	930	17.75	451
HU367R	F5	69.13	1756	36.62	930	36.62	930	17.75	451
HU368		69.13	1756	36.62	930	36.62	930	17.75	451
HU368R		69.13	1756	36.62	930	36.62	930	17.75	451
HU461	F6	20.50	521	14.75	375	16.13	410	6.85	174
HU462		20.50	521	14.75	375	16.13	410	6.85	174
HU463	F5	20.50	521	14.75	375	16.13	410	6.85	174
HU464		29.00	737	23.25	591	24.88	632	8.75	222
HU465	E4	50.25	1276	33.88	861	33.88	861	10.13	257
HU466		50.25	1276	33.88	861	33.88	861	10.13	257

© 2009 Schneider Electric
All Rights Reserved

Series
A1F

Low Cost OEM Pressure Switch

Field Installable Weatherproof Enclosure

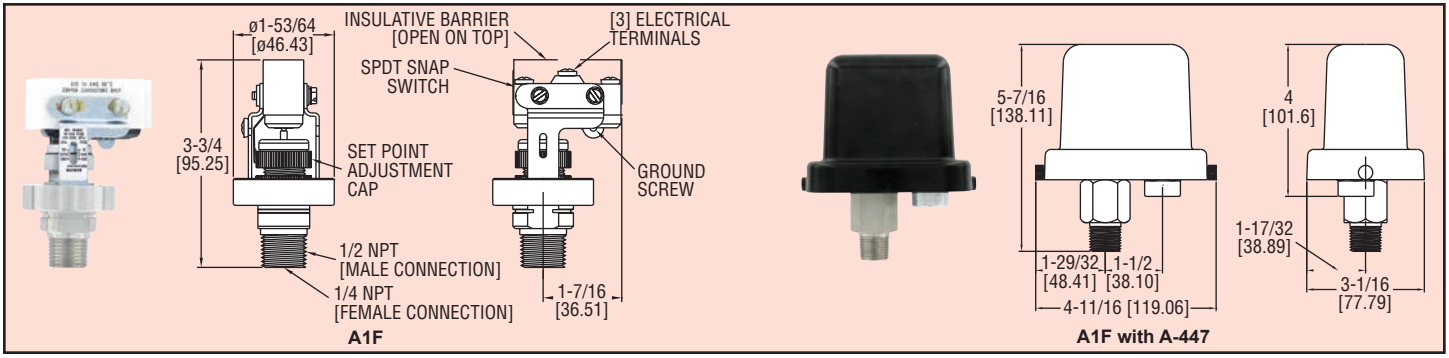

Low cost and precision made, the A1F Pressure Switch is ideal for OEM industrial applications. Wetted materials of 316 SS and fluorocarbon ensure great chemical compatibility with a wide range of process media. The open case style is perfect for panel mounting applications like pump skids. Field-installable weatherproof enclosure is available in polycarbonate offering a low cost weatherproof switch. Superior 15 A contact allows direct control of motors or pumps without the use of external relays, a true cost savings. Features include a convenient indicating scale for quick and easy field adjustment.

Model	Range	Deadband at Min Range	Deadband at Max Range
A1F-O-SS-1-1	2 to 15 (0.14 to 1.03)	2 (0.14)	3 (0.21)
A1F-O-SS-1-2	4 to 75 (0.28 to 5.17)	4 (0.27)	15 (1.0)
A1F-O-SS-1-3	8 to 225 (0.55 to 15.5)	8 (0.55)	25 (1.7)
A1F-O-SS-1-4	16 to 450 (1.1 to 31.0)	15 (1.0)	50 (3.5)

psig (bar)

ACCESSORY

A-447, Weatherproof enclosure; Easy field installation; Meets NEMA 4X, polycarbonate cover with 1/2″ NPT female conduit entry.

SPECIFICATIONS

Service: Compatible liquids and gases.
Wetted Materials: Pressure Chamber: 316 SS; Diaphragm: Fluorocarbon.
Temperature Limit: -40 to 175°F (-40 to 80°C).
Pressure Limits: 750 psig (51 bar).
Enclosure Rating: No rating for open construction. Installed properly within an optional A-447 enclosure meets NEMA 4X (IP66) standards.
Switch Type: SPDT snap switch.
Electrical Rating: 15 A @ 120/240/480 VAC; 1/8 HP @ 125 VAC; 1/4 HP @ 250 VAC.
Electrical Connection: Screw terminals.
Process Connection: 1/4″ female NPT and 1/2″ male NPT.
Mounting Orientation: Within 20° of vertical.
Set Point Adjustment: Knurled screw cap with indicating scale.
Deadband: Fixed. See deadband chart.
Weight: 10.5 oz (297 g).
Agency Approvals: CE, cUL, UL.

OPTION

Weatherproof enclosure. Optional A-447 enclosure factory installed. To order change "O" to "PC".
Example: A1F-PC-SS-1-1

3P Series Molded Case Circuit Breakers
15 - 100 Amp G-Frame

G3P-40

GHMVD12B

F0S03C

3TA100G6K

GDIN

G-Frame circuit breakers are available as a single unit, or with accessories pre-installed only. Accessories are not field installable on this frame size. G-Frame breakers are suitable for reverse feed use. All breakers include base mounting hardware for panel mount applications.

G-Frame Series Three Pole Molded Case Circuit Breakers

Part Number	Price	Description	Pre-Installed Accessories*	Ampere Rating	Voltage	Interrupt Capacity
G3P-015	<--->	Molded case circuit breaker with non-adjustable thermal magnetic trip; line and load lug terminals included.	None	15	240VAC 480VAC	65kA 22kA 10kA
G3P-015-AUX	<--->		With auxiliary contact, SPDT			
G3P-020	<--->	Molded case circuit breaker with non-adjustable thermal magnetic trip; line and load lug terminals included.	None	20		
G3P-020-AUX	<--->		With auxiliary contact, SPDT			
G3P-025	<--->	Molded case circuit breaker with non-adjustable thermal magnetic trip; line and load lug terminals included.	None	25		
G3P-030	<--->	Molded case circuit breaker with non-adjustable thermal magnetic trip; line and load lug terminals included.	None	30		
G3P-030-AUX	<--->		With auxiliary contact, SPDT			
G3P-030-STAC	<--->		With 120 VAC shunt trip			
G3P-030-STDC	<--->		With 24 VDC shunt trip			
G3P-030-UVAC	<--->		With 120 VAC undervoltage release			
G3P-040	<--->	Molded case circuit breaker with non-adjustable thermal magnetic trip; line and load lug terminals included.	None	40		
G3P-050	<--->		None	50		
G3P-060	<--->		None	60		
G3P-060-AUX	<--->	Molded case circuit breaker with non-adjustable thermal magnetic trip; line and load lug terminals included.	With auxiliary contact, SPDT			
G3P-060-STAC	<--->		With 120 VAC shunt trip			
G3P-060-STDC	<--->		With 24 VDC shunt trip			
G3P-060-UVAC	<--->		With 120 VAC undervoltage release			
G3P-070	<--->	Molded case circuit breaker with non-adjustable thermal magnetic trip; line and load lug terminals included.	None	70		
G3P-080	<--->		None	80		
G3P-090	<--->		None	90		
G3P-100	<--->	Molded case circuit breaker with non-adjustable thermal magnetic trip; line and load lug terminals included.	None	100		
G3P-100-AUX	<--->		With auxiliary contact, SPDT			
G3P-100-STAC	<--->		With 120 VAC shunt trip			
G3P-100-STDC	<--->		With 24 VDC shunt trip			
G3P-100-UVAC	<--->		With 120 VAC undervoltage release			

***Note: Available accessories are pre-installed on G-Frame and F-Frame Molded Case Circuit Breakers. They are not field installable or interchangeable.**

****For DC or 1-phase AC applications, use the two outside poles of the 3-pole circuit breaker**

G-Frame Accessory Selection Guide

Part Number	Price	Description
GHMVD06B	<--->	NEMA 1/12 rotary handle for G-Frame. Position indicating; lock-off feature. Shaft length: 6"
GHMVD12B	<--->	NEMA 1/12 rotary handle for G-Frame. Position indicating; lock-off feature. Shaft length: 12"
F0S03C	<--->	NEMA 1/12 flexible shaft handle for G-Frame. Flange mounted. Lockable. Shaft length: 3'
F0S06C	<--->	NEMA 1/12 flexible shaft handle for G-Frame. Flange mounted. Lockable. Shaft length: 6'
3TA100G6K	<--->	Multi-wire connector to allow 6 wires to be connected to the G-frame. UL for copper only. 14-6AWG. Package of 3
GDIN	<--->	DIN rail clip adapter to allow mounting of G-Frame unit on 35mm DIN rail. Pkg of 1 includes mounting hardware.

AWG Wire Range Specifications

Circuit Breaker	Ampere Rating	Wire Type	AWG Wire Range	Metric Wire Range mm²
G-Frame	15 - 20	Cu/Al	14 - 10	2.5 - 4
	25 - 100		10 - 1/0	4 - 50

G-Frame Electrical Ratings

	Volts	Frequency	Amperes	Contact Arrangement
G-Frame Auxiliary Switch	240 VAC	50/60 Hz	6	1a/1b - SPDT
G-Frame Shunt Trip	120 VAC	50/60 Hz	1.1	
	24 VDC	DC	5.7	
	120 VAC	50/60 Hz	0.05	
G-Frame Undervoltage Release Mechanism	Dropout Voltage		Pickup Voltage	
	Min	Max	Max	
	38.5 VAC	77.0 VAC	93.5 VAC	

CLASS RK5 – FLNR_ID • FLSR_ID SERIES INDICATOR® FUSES

250/600 Vac • Dual Element • Time Delay • 1/10-600 A

Description

Available in both Indicating and Non-Indicating versions, the FLNR/FLSR series of fuses set the standard for general purpose fuses. The dual-element design provides advanced short circuit and overload protection. FLSR series fuses provide excellent protection for all types of circuits especially those containing motors.

Applications

- Service entrance switches
- Transformers
- Switchboard mains and feeders
- Motor control central mains and motor branch circuits
- All general purpose circuits

Features/Benefits

- Indication
- Dual-element design
- Available without indication
- Current limiting

Specifications

Voltage Ratings	AC: 250 V (FLNR_ID); 600 V (FLSR_ID) DC: 125 V (FLNR 1/10 – 30 A); 125 V (FLNR_ID 35 – 600 A); 300 V (FLSR_ID)
Interrupting Ratings	AC: 200 kA rms symmetrical 300 kA rms symmetrical (Littelfuse self-certified) DC: 20 kA
Ampere Range	1/10 – 600 A
Approvals	Standard 248-12, Class RK5 UL Listed (File: E81895) CSA Certified (File: LR29862) Federal Specification WF-1814 (QPL- W-F-1814)

Dimensions

Please refer to the Class R dimensions page 2.

Ordering Information

AMPERE RATINGS							
1/10	6/10	1 8/10	4	8	30	80	225
1/8*	8/10	2	4 1/2	9	35	90	250
15/100	1	2 1/4	5	10	40	100	300
2/10	1 1/8	2 1/2	5 6/10	12	45	110	350
1/4	1 1/4	2 8/10	6	15	50	125	400
3/10†	1 4/10	3	6 1/4	17 1/2	60	150	450
4/10	1 1/2	3 2/10	7	20	70	175	500
1/2	1 6/10	3 1/2	7 1/2	25	75**	200	600

*FLNR only. †FLNR, FLSR, FLSR_ID only. **FLNR, FLSR, FLSR_ID only
Note: For 1/10 – 30A 250 volt fuses, order non-indicating FLNR series fuses.

TYPE	VOLT	SERIES	AMP	CATALOG NUMBER	ORDERING NUMBER
NON-INDICATING	600	FLSR	15	FLSR015	FLSR015.T
INDICATING	600	FLSR_ID	15	FLSR015ID	FLSR015.TXID
NON-INDICATING	250	FLNR	60	FLNR060	FLNR060.T
INDICATING	250	FLNR_ID	60	FLNR060ID	FLNR060.TXID

Web Resources

Download TC Curves, CAD drawings and other technical information: **littelfuse.com/flsr**
littelfuse.com/flnr

Recommended Fuse Holders

LFR60 Series • LFR25 Series

Peak Let-Thru Curve (600 V)

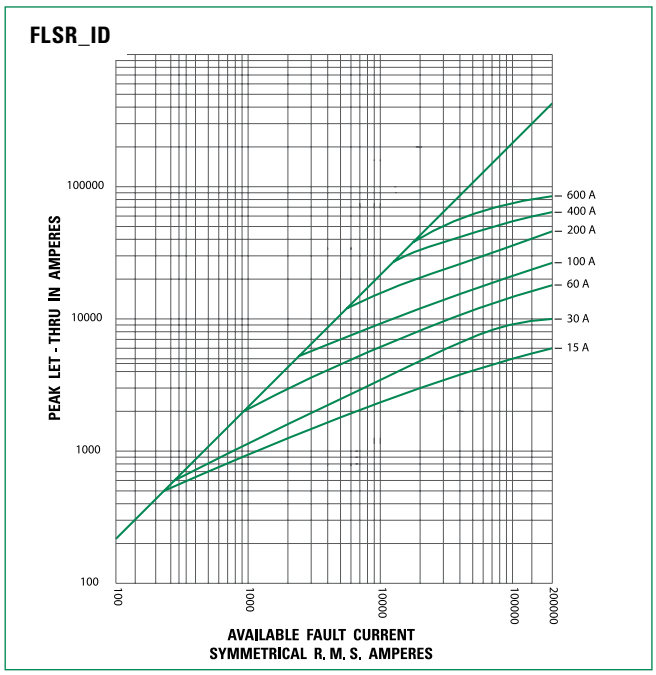

Note: For more information, see Peak Let-Thru Table

© 2016 Littelfuse POWR-GARD® Products

CLASS RK5 – FLNR_ID • FLSR_ID SERIES INDICATOR® FUSES

Current-Limiting Effects of FLSR and FLSR_ID (600 V) Fuses

SHORT-CIRCUIT CURRENT*	APPARENT RMS SYMMETRICAL CURRENT FOR VARIOUS FUSE RATINGS					
	30 A	60 A	100 A	200 A	400 A	600 A
5,000	1,250	2,100	3,200	5,000	5,000	5,000
10,000	1,600	2,850	4,300	7,250	10,000	10,000
15,000	1,800	3,400	5,000	8,500	13,500	15,000
20,000	2,250	3,800	5,500	9,500	15,750	19,000
25,000	2,450	4,100	5,700	10,250	17,000	21,000
30,000	2,700	4,500	6,400	10,750	18,000	23,000
35,000	2,900	4,800	6,700	11,500	19,000	24,250
40,000	3,000	5,000	7,250	12,000	19,500	27,000
50,000	3,400	5,250	7,750	13,000	21,000	29,000
60,000	3,600	5,750	8,100	14,000	22,000	30,500
80,000	3,900	6,250	9,000	15,000	24,000	33,000
100,000	4,300	6,750	9,750	16,500	26,000	35,000
150,000	4,500	7,600	11,100	19,000	28,000	38,000
200,000	4,600	8,400	12,250	21,500	30,000	40,000

Current-Limiting Effects of FLNR and FLNR_ID (250V) Fuses

SHORT-CIRCUIT CURRENT*	APPARENT RMS SYMMETRICAL CURRENT FOR VARIOUS FUSE RATINGS					
	30 A	60 A	100 A	200 A	400 A	600 A
5,000	1,400	2,100	3,100	5,000	5,000	5,000
10,000	1,550	2,500	3,900	6,500	9,500	10,000
15,000	2,000	3,150	4,400	7,250	10,500	14,000
20,000	2,250	3,400	5,000	8,250	12,000	16,000
25,000	2,400	3,750	5,250	9,000	12,500	16,500
30,000	2,550	4,100	5,600	9,500	13,500	18,000
35,000	2,650	4,300	5,800	9,750	14,000	19,000
40,000	2,800	4,400	6,250	10,250	15,000	20,000
50,000	3,000	5,000	6,500	10,500	16,000	21,000
60,000	3,200	5,250	7,000	11,500	17,000	23,000
80,000	3,400	5,750	7,500	12,500	19,000	25,500
100,000	3,850	6,000	8,000	13,500	21,000	27,500
150,000	4,100	7,000	9,000	15,200	24,000	31,500
200,000	4,300	7,500	9,750	16,500	26,000	34,000

*Prospective RMS Symmetrical Amperes Short-Circuit Current
Note: Data Derived from Peak Let-Thru Curves

Dimensions

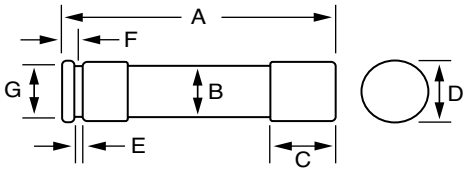

FIG. 1

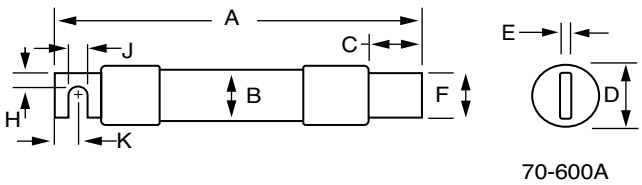

70-600A

FIG. 2

AMPS	FIGURE NUMBER	SERIES	DIMENSIONS INCHES (mm)									
			A	B	C	D	E	F	G	H	J	K
1/10–30	1	FLNR	2 (50.8)	½ (12.7)	½ (12.7)	9/16 (14.3)	5/64 (2.0)	5/32 (4.0)	3/8 (9.5)	—	—	—
		FLSR	5 (127.0)	¾ (19.1)	5/8 (15.9)	13/16 (20.6)	3/32 (2.4)	3/16 (4.8)	5/8 (15.9)	—	—	—
35–60	1	FLNR	3 (76.2)	¾ (19.1)	5/8 (15.9)	13/16 (20.6)	3/32 (2.4)	3/16 (4.8)	5/8 (15.9)	—	—	—
		FLSR	5½ (139.7)	1 (25.4)	5/8 (15.9)	1 1/16 (27.0)	3/32 (2.4)	¼ (6.4)	7/8 (22.2)	—	—	—
70–100	2	FLNR	5 7/8 (149.2)	1 (25.4)	1 1/16 (27.0)	1 1/16 (27.0)	1/8 (3.2)	¾ (19.1)	—	¼ (6.4)	9/32 (7.1)	½ (12.7)
		FLSR	7 7/8 (200.0)	1¼ (31.8)	1 1/16 (27.0)	1 5/16 (33.3)	1/8 (3.2)	¾ (19.1)	—	¼ (6.4)	9/32 (7.1)	½ (12.7)
110–200	2	FLNR	7 1/8 (181.0)	1½ (38.1)	1 15/32 (37.3)	1 19/32 (40.5)	3/16 (4.8)	1 1/8 (28.6)	—	7/16 (11.1)	9/32 (7.1)	11/16 (17.5)
		FLSR	9 5/8 (244.5)	1¾ (44.5)	1 15/32 (37.3)	1 27/32 (46.8)	3/16 (4.8)	1 1/8 (28.6)	—	7/16 (11.1)	9/32 (7.1)	11/16 (17.5)
225–400	2	FLNR	8 5/8 (219.1)	2 (50.8)	1 15/16 (49.2)	2 3/32 (53.2)	¼ (6.4)	1 5/8 (41.3)	—	5/8 (15.9)	13/32 (10.3)	15/16 (23.8)
		FLSR	11 5/8 (295.3)	2½ (63.5)	2 (50.8)	2 19/32 (65.9)	¼ (6.4)	1 5/8 (41.3)	—	5/8 (15.9)	13/32 (10.3)	15/16 (23.8)
450–600	2	FLNR	10 3/8 (263.5)	2½ (63.5)	2 3/8 (60.3)	2 19/32 (65.9)	¼ (6.4)	2 (50.8)	—	¾ (19.1)	17/32 (13.5)	1 1/8 (28.6)
		FLSR	13 3/8 (339.7)	3 (76.2)	2 13/32 (61.1)	3 3/32 (78.6)	¼ (6.4)	2 (50.8)	—	¾ (19.1)	17/32 (13.5)	1 1/8 (28.6)

© 2016 Littelfuse POWR-GARD® Products

Small Thermostats For Enclosure Heaters, DIN Rail Mounted

011409-00 and 011469-00

011419-00 and 011479-00

Applications

N.C. Adjustable Thermostat (red temperature dial):

Thermostat opens on temperature rise. Uses may include regulating heaters or switching signal devices when temperature has fallen below the setpoint value.

N.O. Adjustable Thermostat (Blue temperature dial):

Thermostat closes on temperature rise. Uses may include regulating heat exchangers, filter fans or switching signal devices when temperature exceeds the setpoint value.

Features

- Compact design
- Wide adjustment range
- Color coded temperature dials
- DIN rail mounting

Part Number	Price	Contact	Setting Range
011409-00	$15.25	N.C. Open on rise	+32° to 140°F
011469-00	$15.25		0° to 60°C
011419-00	$15.25	N.O. Close on rise	+32° to 140°F
011479-00	$15.25		0° to 60°C

Small Thermostats (DIN Rail Mounted) Specifications	
Switching Difference	12.6°F ±7°F tolerance (7K ± 4K)
Sensor Element	Thermostatic bimetal
Contact Type	Snap-action contact
Contact Resistance	<10 mΩ
Service Life	>100,000 cycles
Max. Switching Capacity	15 A resistive / 2A inductive @ 120 VAC; 10 A resistive / 2A inductive @ 250 VAC; DC 30 W
Max. Inrush Current	AC 16 A for 10 sec.
Minimum Load	20 mA (all voltages)
Connection	2-pole terminal, clamping torque 0.5 Nm max.; solid wire - 14 AWG max. (2.5 mm²); stranded wire (with wire end ferrule) - 16 AWG (1.5 mm²)
Housing	Plastic, UL 94V-0, light gray
Mounting	Clip for 35 mm DIN rail, EN 60715
Mounting Position	Vertical
Operating / StorageTemperature	-49° to 176°F (-45° to 80°C)
Weight	0.09 lb (40 g)
Protection Type	IP20
Approvals	CE, CSA, UL Recognized File No. E164102, RoHS compliant

Dimensions

Inches [mm]

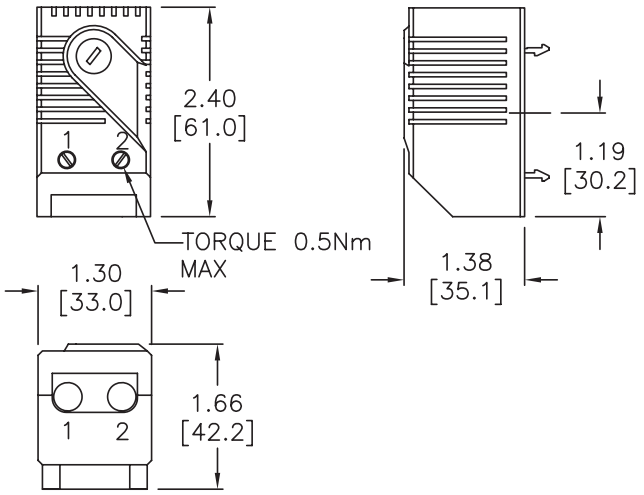

Wiring Diagrams:

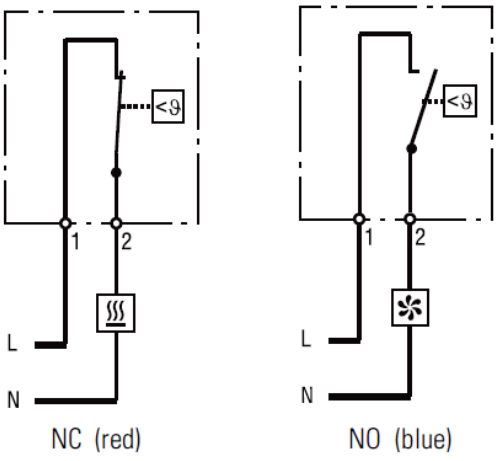

Fliteway Technologies, Inc.

Treated Water Pump Skid

2129 East Birchwood Ave. Cudahy, WI 53110

(414) 483-5600 1-800-236-3580 FAX (414) 483-1957

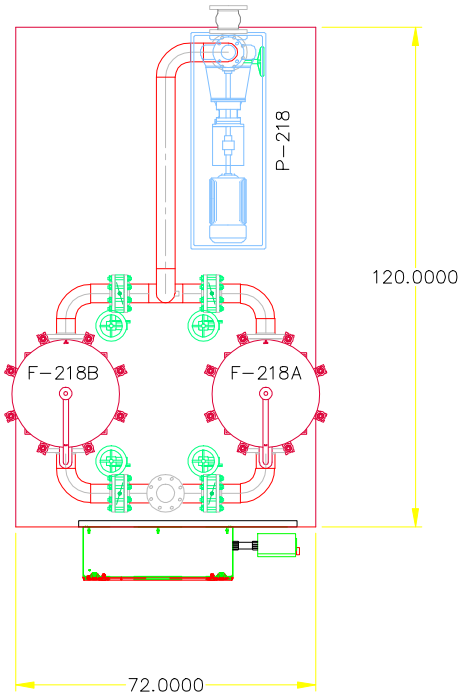

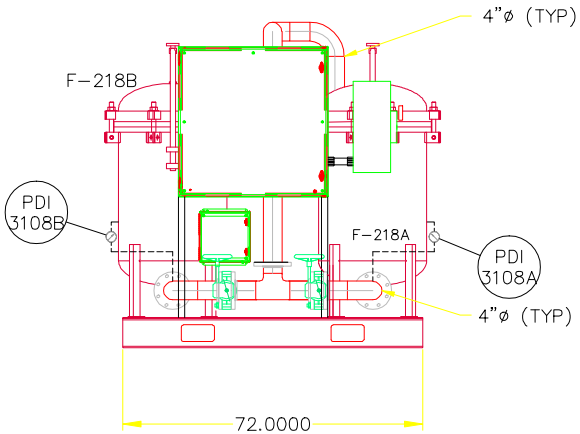

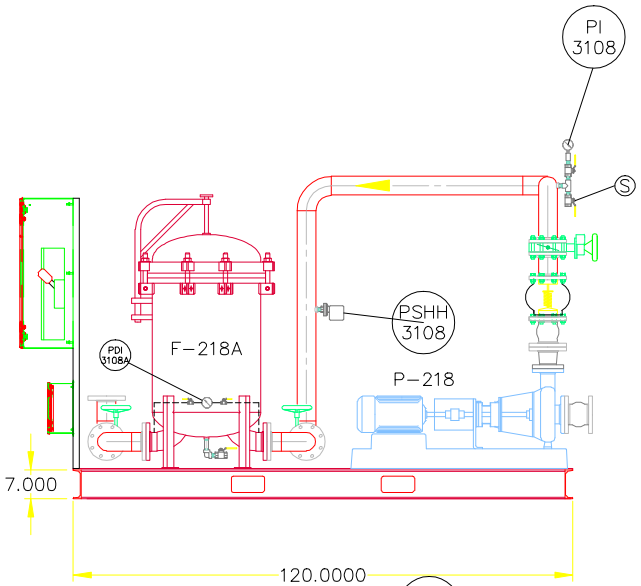

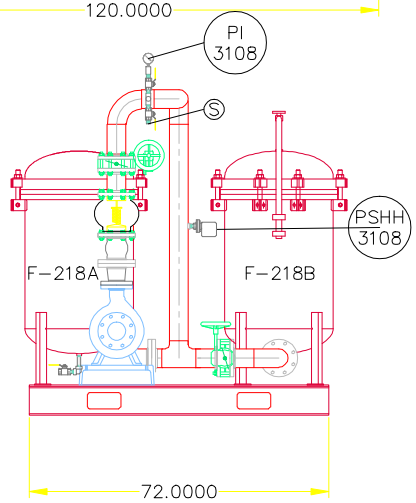

THIS DRAWING IS THE PROPERTY OF
Fliteway Technologies, Inc
2129 EAST BIRCHWOOD AVE
CUDAHY WI, 53110
414.483.5600 414.483.1957
AND IS NOT TO BE REPRODUCED
WITHOUT WRITTEN PERMISSION

6'X10' TREATED WATER PUMP SKID

TECHSAS INC.
KIRTLAND AFB

9/19/16	SIZE	FSCM NO.	DWG NO. Q14617
	REV 1		
	SCALE NONE	SHEET 1 OF 1	

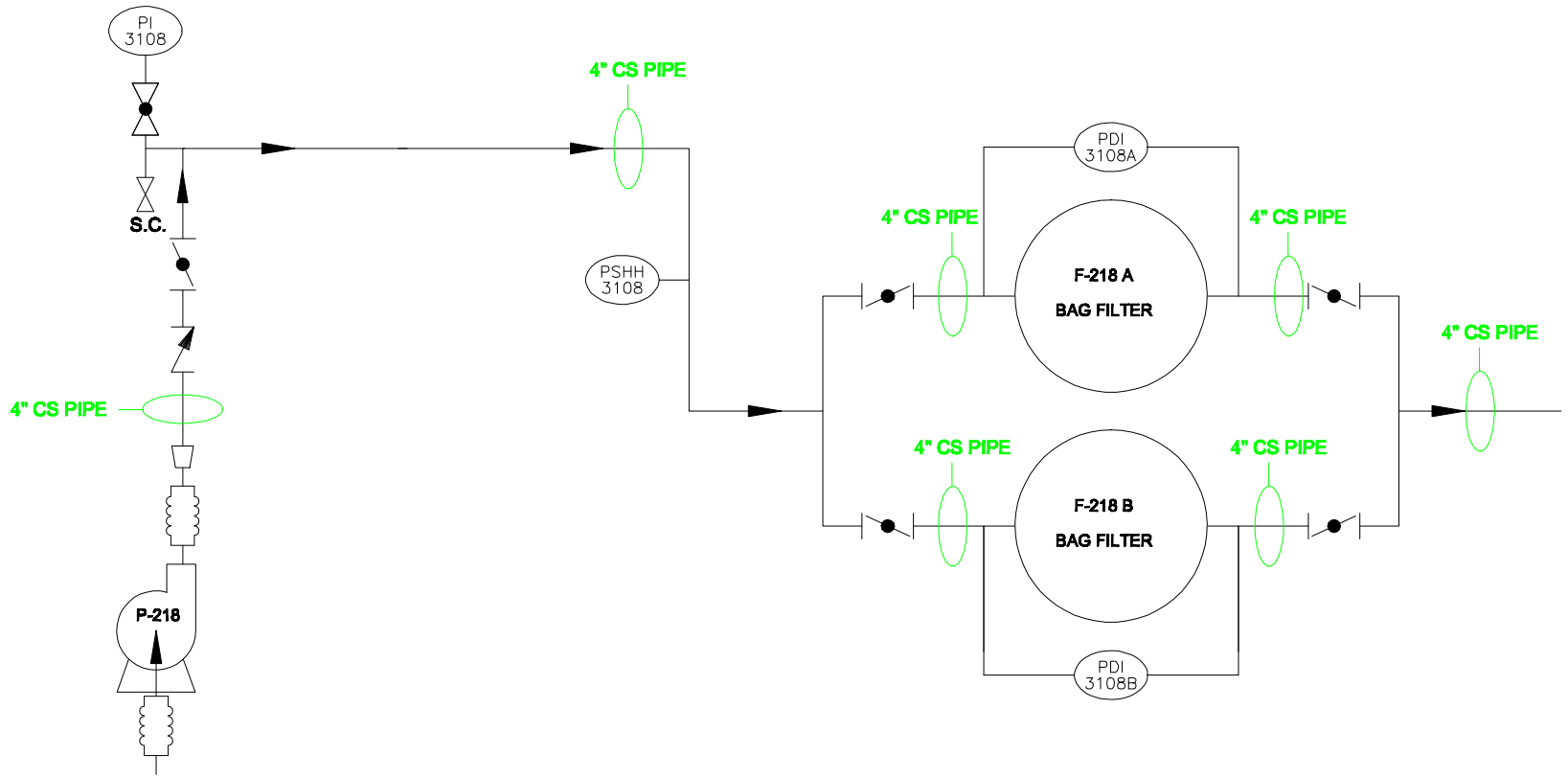

CONCENTRIC REDUCER

S.C. SAMPLE CONNECTION/PORT

CHECK VALVE

BALL VALVE

EXPANSION JOINT

BUTTERFLY VALVE

THIS DRAWING IS THE PROPERTY OF
Fliteway Technologies, Inc
2129 EAST BIRCHWOOD AVE
CUDAHY WI, 53110
414.483.5600 414.483.1957
AND IS NOT TO BE REPRODUCED
WITHOUT WRITTEN PERMISSION

8/11/16

6'X10' TREATED WATER P&ID

TECHSAS INC.
KIRTLAND AFB

SIZE	FSCM NO.	DWG NO.	REV
		Q14617	1

SCALE NONE

SHEET 1 OF 1

FEED PUMP SKID #1

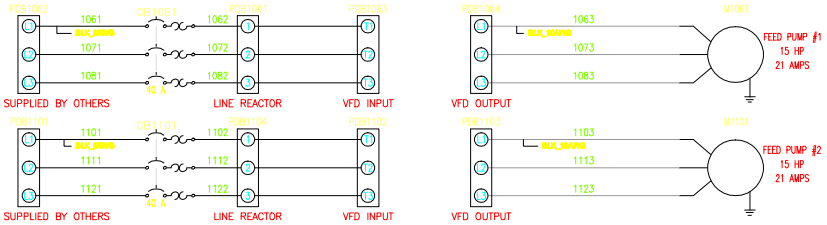

HIGH VOLTAGE PANEL

VFD FEED PUMP #1 WIRING

VFD_TB_12	VFD FAULT - PROVIDED OVER ETHERNET
VFD_TB_13	
VFD_TB_15	VFD RUNNING - PROVIDED OVER ETHERNET
VFD_TB_16	
VFD_TB_25	N
VFD_TB_28	120VAC VFD RUN SIGNAL (FROM MCP)

VFD FEED PUMP #2 WIRING

VFD_TB_12	VFD FAULT - PROVIDED OVER ETHERNET
VFD_TB_13	
VFD_TB_15	VFD RUNNING - PROVIDED OVER ETHERNET
VFD_TB_16	
VFD_TB_25	N
VFD_TB_28	120VAC VFD RUN SIGNAL (FROM MCP)

LOW VOLTAGE JUNCTION BOX

LOW VOLTAGE JBOX

HHL_F/S	120VAC OR 24VDC CONTROL POWER
HHL_F/S	TANK HHL ALARM (DRY CONTACT)
LL_F/S	
LL_F/S	TANK LLL (DRY CONTACT)
PRS._SW	
PRS._SW	HIGH PRESSURE SWITCH ALARM (N.O. DRY CONTACT)
FLOW_METER	24VDC CONTROL POWER
FLOW_METER	FLOW METER 4-20mA SIGNAL
FLOW_METER	FLOW METER SHIELD WIRE
P1_THRM_OL	120VAC CONTROL POWER
P1_THRM_OL	FEED PUMP #1 MOTOR THERMAL OVERLOAD WIRED TO VFD, VIEWED OVER ETHERNET
P2_THRM_OL	
P2_THRM_OL	FEED PUMP #2 MOTOR THERMAL OVERLOAD WIRED TO VFD, VIEWED OVER ETHERNET
LVL_TRANS	24VDC CONTROL POWER
LVL_TRANS	LEVEL TRANSMITTER 4-20mA SIGNAL
LVL_TRANS	LEVEL TRANSMITTER SHIELD WIRE

TREAT WATER PUMP SKID #2

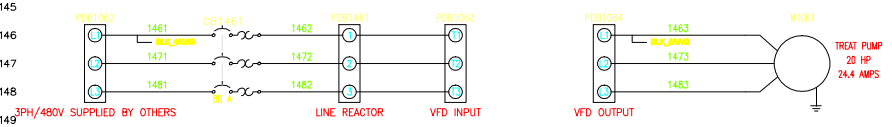

HIGH VOLTAGE PANEL

VFD TREAT PUMP WIRING

VFD_TB_12	VFD FAULT - PROVIDED OVER ETHERNET
VFD_TB_13	
VFD_TB_15	VFD RUNNING - PROVIDED OVER ETHERNET
VFD_TB_16	
VFD_TB_25	N
VFD_TB_28	120VAC VFD RUN SIGNAL (FROM MCP)

LOW VOLTAGE JUNCTION BOX

LOW VOLTAGE JBOX

HHL_F/S	120VAC OR 24VDC CONTROL POWER
HHL_F/S	TANK HHL ALARM (DRY CONTACT)
LL_F/S	
LL_F/S	TANK LLL (DRY CONTACT)
PRS._SW	
PRS._SW	HIGH PRESSURE SWITCH ALARM (N.O. DRY CONTACT)
FM_24V	24VDC CONTROL POWER
FM_TR	FLOW METER 4-20mA SIGNAL
FM_S	FLOW METER SHIELD WIRE
TP_THRM_OL	120VAC CONTROL POWER
TP_THRM_OL	TREATMENT PUMP MOTOR THERMAL OVERLOAD WIRED TO VFD, VIEWED OVER ETHERNET
LVL_TRANS	24VDC CONTROL POWER
LVL_TRANS	LEVEL TRANSMITTER 4-20mA SIGNAL
LVL_TRANS	LEVEL TRANSMITTER SHIELD WIRE

THIS PRINT AND ITS CONTENTS ARE THE PROPERTY OF FLITEWAY AND MUST NOT BE USED FOR ANY PURPOSE NOT AUTHORIZED BY FLITEWAY. DO NOT DISCLOSE, REPRODUCE OR OTHERWISE USE THIS PRINT OR ITS CONTENTS IN ANY MANNER DETRIMENTAL TO THE INTEREST OF FLITEWAY WITHOUT FLITEWAY'S PRIOR WRITTEN CONSENT. FLITEWAY RESERVES ALL RIGHTS OF DESIGN AND INVENTION TO THE EXTENT PERMITTED BY LAW.

CAD SYSTEM	ACADE
SCALE	1:1
UNITS	IN
FORMAT	D

Fliteway Technologies, Inc.
2129 East Birchwood Ave.
Cudahy, WI 53110

DRAWN BY	Josh
Q #	Q14617 R2
DESIGNED FOR	TECHSAS, Inc.
DESCRIPTION	
Drawing Number	

PLOTTED : 12-16-2014

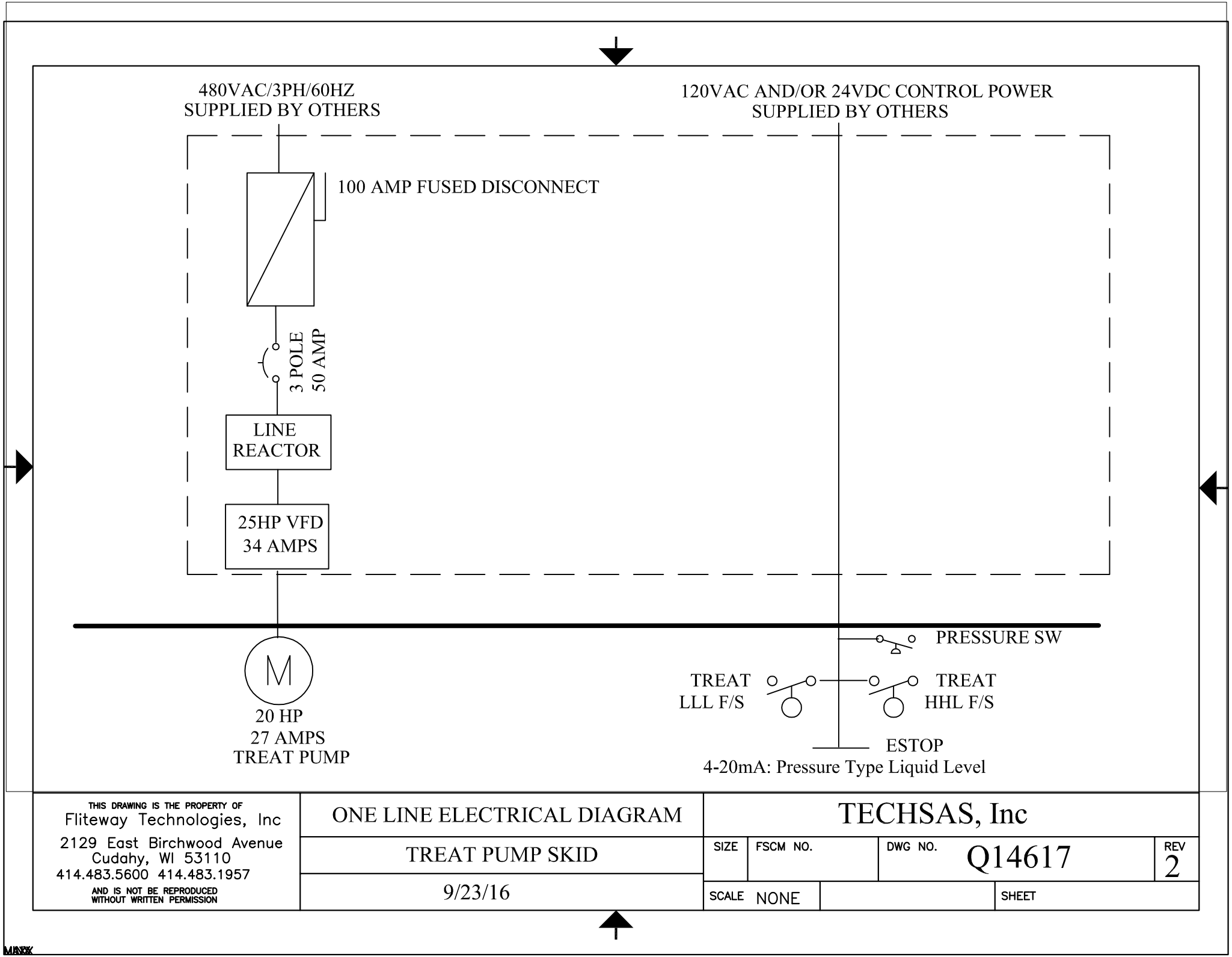

THIS DRAWING IS THE PROPERTY OF
Fliteway Technologies, Inc
2129 East Birchwood Avenue
Cudahy, WI 53110
414.483.5600 414.483.1957
AND IS NOT BE REPRODUCED
WITHOUT WRITTEN PERMISSION

ONE LINE ELECTRICAL DIAGRAM

TREAT PUMP SKID

9/23/16

TECHSAS, Inc

SIZE	FSCM NO.	DWG NO.	REV
		Q14617	2

SCALE NONE | SHEET

CRANE ENGINEERING SALES

April 1, 2016

Proposal No: J_B1598 - Fliteway
Item No: ITEM 001

MODEL:3196 MTi SIZE:3x4-10H QTY: 1

i-FRAME™

Operating Conditions

SERVICE

LIQUID	Water , Temp. 70.0 deg F, SP.GR 1.000, Viscosity 1.000 cp, rated / max. suction pressure 0.0 / 0.0 psi g
CAPACITY Rated	588.9 gpm
HEAD	89.6 (ft)

Performance at 1750 RPM per HI 14.6 1B basis power

PUBLISHED EFFY	0.0% (CDS)
RATED EFFY	77.0%
RATED POWER	17.2 hp (Run out 19.0 hp)
NPSHR	4.0 ft
DISCH PRESSURE (R)	38.8 psi g (44.2 psi g @ Shut off) based on 0.0 psi g rated suction pressure
PERF. CURVE	2929-7 (Rotation CW viewed from coupling end)
SHUT OFF HEAD	102.0 ft
MIN. FLOW	Continuous Stable: 150.0 gpm Hydraulic: 150.0 gpm Thermal: N/A

Materials

CONSTRUCTION	Ductile iron with 316SS impeller
CASING	Ductile iron (max.casing pressure @ rated temperature 250.0 psi g)
ST.BOX COVER	Ductile iron
IMPELLER	316SS - Open (10.0000 in rated, max=10.0000 in, min=6.0000 in)
CASING GASKETS	Aramid Fiber with EPDM and Silicate Filler
IMPELLER O-RING	Teflon
SHAFT MATERIAL	SAE 4140
SHAFT SLEEVE	316SS
LUBRICATION	Flood oil
SEAL CHAMBER	Taper bore plus with axial ribs
GLAND	316SS Flush high performance
BEARINGS	6309 (Inboard) 3309 (Outboard)
COUPLING	Rexnord - Omega Rex Elastomer- ES-5 (standard orange element)-S.F. 1.00
COUPLING GUARD	Carbon steel
BASEPLATE	Cast iron camber top D00057A

Sealing Method

MECHANICAL SEAL	John Crane 4610 C/SC/Viton - (Cartridge - Single)

Flanges

150# flat face

Frame Connections

Bearing frame drain
Frame cooler access
Oil fill connection

Frame features

Ductile iron frame adapter
Inpro VBXX-D Hybrid Bearing Isolators
Premium Severe Duty Thrust Bearings
i-ALERT®2 Bluetooth Smart Equipment Health Monitor

Assembly and Testing

Casing & Cover - Standard hydro test
Impeller balanced to ISO G6.3

Painting

Goulds Blue standard painting

Warranty

5 Year Extended Warranty (All the components, manufactured by ITT Goulds pumps, in the liquid end and power end are covered).

Driver : Electric motor Manufacturer : Pump mfg's Choice

FURNISHED BY	Pump mfg	MOUNTED BY	Pump mfg
RATING	20.0 hp (14.9 KW)	ENCLOSURE	TEFC - Premium Efficiency
PHASE/FREQ/VOLTS	3/60 Hz/460	SPEED	1800 RPM
INSULATION/SF	F/1.15	FRAME	256T

Freight Terms

Freight invoices received from ITT partner carriers are proprietary information and cannot be divulged for any reason. ITT will provide an ITT generated freight invoice upon request.

Weights and Measurements

TOTAL NET UNIT WEIGHT / VOLUME	**728.2 lb / 13.1 ft³**
TOTAL GROSS UNIT WEIGHT / GROSS VOLUME	**904.2 lb / 35.1 ft³**

Program Version 1.56.0.1

Drawing Revision Limit

Drawings returned with status approved as noted or revise and re-submit will be corrected and resubmitted only once. Thereafter, additional comments or revisions to these drawings will incur a charge of $250 per drawing.

Our offer does not include specific review and incorporation of any Statutory or Regulatory Requirements and the offer is limited to the requirements of the design specifications. Should any Statutory or Regulatory requirements need to be reviewed and incorporated then the Customer is responsible to identify those and provide copies for review and revision of our offer.

Our quotation is offered in accordance with our comments and exceptions identified in our proposal.

Click here to download the pump Bulletin

Click here to learn more about the new i-FRAME™

GOULDS PUMPS

OUTLINE DRAWING

Model 3196 MTi
Size 3x4-10H

ITT

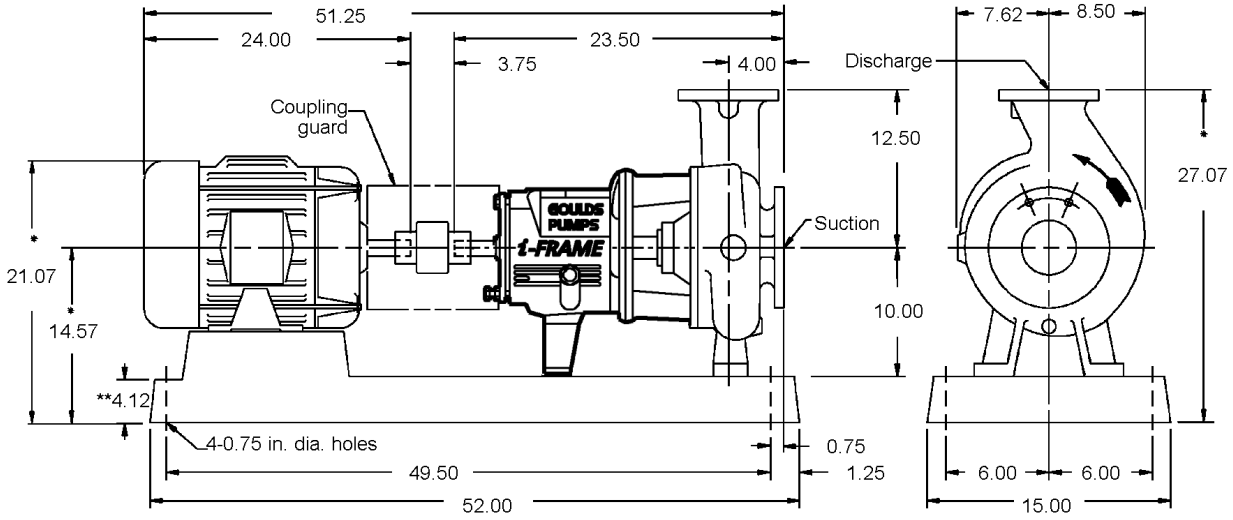

Pump Specification

SUCT.FLANGE SIZE	*4"*	DRILLING	*ANSI 150#*	FACING	*FF*	FINISH	*SERRATED*
DISCH.FLANGE SIZE	*3"*	DRILLING	*ANSI 150#*	FACING	*FF*	FINISH	*SERRATED*
PUMP ROTATION (LOOKING AT PUMP FROM MOTOR)			*CW*				
TYPE OF LUBRICATION	*FLOOD OIL*					COOLED	*NO*
TYPE OF STUFFING BOX	*TAPER BORE PLUS WITH AXIAL RIBS*					COOLED	*NO*
TYPE OF SEALING	*MECHANICAL SEAL*						

Weights and Measurements

PUMP	*295.0 lb*
MOTOR/CPLG	*270.0/8.2 lb*
BASEPLATE	*155.0 lb*
TOTAL	*728.2 lb*
GR.VOLUME w/BOX	*35.1 ft³*
GR.WEIGHT w/BOX	*904.2 lb*

Motor Specification

MOTOR BY	*PUMP MFG*	MOUNT BY	*PUMP MFG*	MFG.	*PUMP MFG'S CHOICE*
FRAME	*256T*	POWER	*20.0 hp*	RPM	*1800*
PHASE	*3*	FREQUENCY	*60 HZ*	VOLTS	*460*
INSULATION	*F*	S.F.	*1.15*		
ENCLOSURE	*TEFC - PREMIUM EFFICIENCY*				

Notes and References

- MTR DIMENSIONS ARE APPROXIMATE
- INSTALL FOUNDATION BOLTS IN PIPE SLEEVES
- ALLOW FROM 0.75 to 1.50in. FOR GROUTING. SEE INSTRUCTION BOOK FOR DETAILS.

* Tolerance is -0.38 +0.38

** Foundation bolt grip thickness

Auxiliary Specification

COUPLING BY	*PUMP MFG*	CPLG TYPE	*REXNORD OMEGA REX ELASTOMER- ES-5 (STANDARD ORANGE*
CPL GUARD BY	*PUMP MFG*	CPLG GUARD MATL	*CARBON STEEL*
BASEPLATE	*CAST IRON CAMBER TOP D00057A*		
MECH.SEAL	*JOHN CRANE 4610 C/SC/VITON*		

FOR PUMP TAPPED OPENINGS REFER TO DWG.:
TJ_B1598 - Fliteway / ITEM 001

DRAWING IS FOR REFERENCE ONLY.
NOT CERTIFIED FOR CONSTRUCTION UNLESS SIGNED.

Customer: CRANE ENGINEERING SALES
Serial No:
Customer P.O. No:
Item No: ITEM 001
End User: Fliteway
Service:

Copyright 2016
ITT Corp

All dimensions are in inches.
Drawing is not to scale
Weights (lbs) are approximate

DRAWING NO J_B1598 - Fliteway/ITEM 001

GOULDS PUMPS TAPPED OPENINGS Model 3196 MTi Size 3x4-10H

ITT

TAPPED OPENINGS MODEL 3196 MTi 3x4-10H ANSI NO. A40

NO.	SIZE	QTY.	PURPOSE	FURNISHED YES/NO	NO.	SIZE	QTY.	PURPOSE	FURNISHED YES/NO
TB	1/2	1	CASING DRAIN	NO	TL1	---	2	FRAME COOLER ACCESS	YES
TC	1/2	1	BY-PASS CONNECTION	NO	TN	1/4	4	GREASE FITTING	NO
TD	3/8	1	DISCH. GAUGE CONNECTION	NO	TN2	1/4	2	OIL MIST INJECTION PORT	NO
TE	3/8	1	SUCTION GAUGE CONNECTION	NO	TY	3/4	1	OIL FILL	YES
TF	1/2	1	BEARING FRAME DRAIN	YES	TS	1	2	SIGHT GLASS/OILER CONN.	YES
TL	1/2	2	FRAME COOLING CONNECTION	NO	TBL	1/4	2	VIB./TEMP. CONNECTION	NO

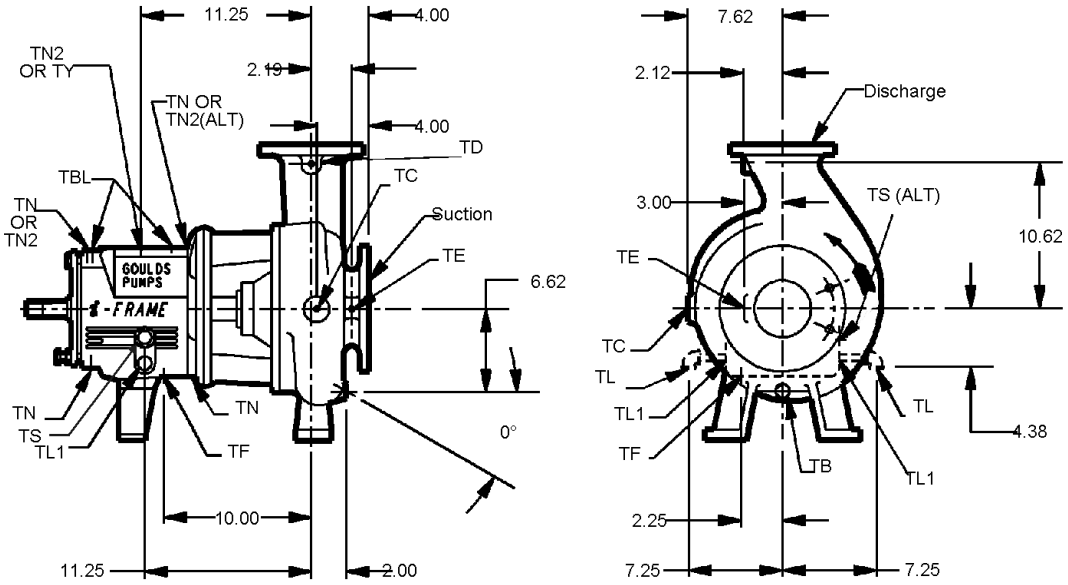

DRAWING IS FOR REFERENCE ONLY.

NOT CERTIFIED FOR CONSTRUCTION UNLESS SIGNED.

Customer: CRANE ENGINEERING SALES
Serial No:
Customer P.O. No:
Item No: ITEM 001
End User: Fliteway
Service:

Copyright 2016
ITT Corp

All dimensions are in inches.

Drawing is not to scale

DRAWING NO J_B1598 - Fliteway/ITEM 001

Model: 3196	Size: 3x4-10H	Group: MTi	60Hz	RPM: 1750	Stages: 1

Job/Inq.No. :
Purchaser : CRANE ENGINEERING SALES
End User: Fliteway
Item/Equip.No. : ITEM 001
Service :
Order No. :

Issued by : Jorie Ballun
Quotation No. : J_B1598 - Fliteway
Certified By :

Date : 04/01/2016
Rev. : 0

Operating Conditions

Liquid:	Water
Temp.:	70.0 deg F
S.G./Visc.:	1.000/1.000 cp
Flow:	588.9 gpm
TDH:	89.6 ft
NPSHa:	0.0 ft
Solid size:	
% Susp. Solids (by wtg):	

Pump Performance

Published Efficiency:		Suction Specific Speed:	9,877 gpm(US) ft
Rated Pump Efficiency:	77.0 %	Min. Hydraulic Flow:	150.0 gpm
Rated Total Power:	17.2 hp	Min. Thermal Flow:	N/A
Non-Overloading Power:	19.0 hp		
Imp. Dia. First 1 Stg(s):	10.0000 in		
NPSHr:	4.0 ft		
Shut off Head:	102.0 ft		
Vapor Press:		Max. Solids Size:	0.6250 in

Notes: 1. Power and efficiency losses are not reflected on the curve below.
2. Elevated temperature effects on performance are not included.

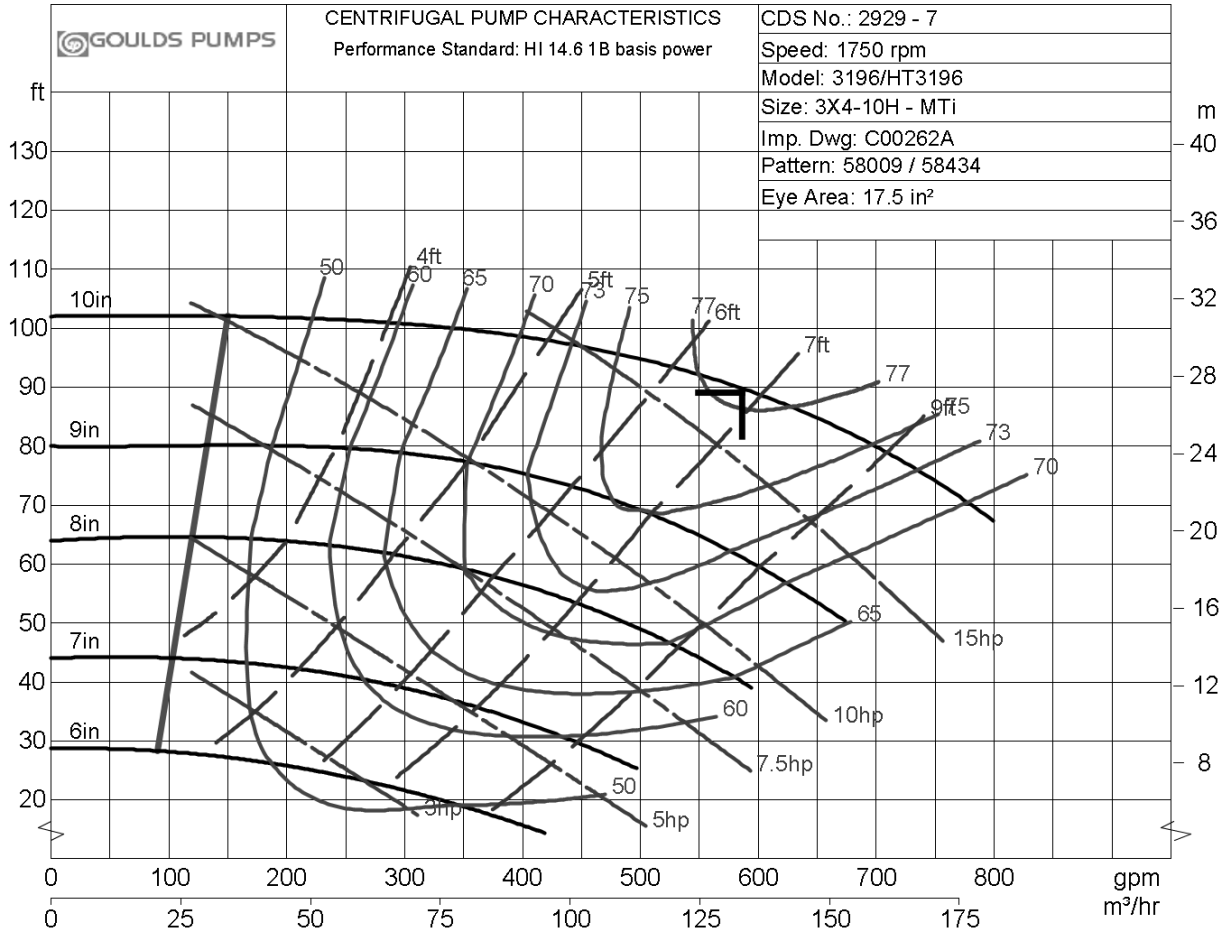

Model: 3196	Size: 3X4-10H	Group: MTi	60Hz	RPM Variable	Stages: 1

Job/Inq.No. :
Purchaser : CRANE ENGINEERING SALES
End User : Fliteway
Item/Equip.No. : ITEM 001
Service :
Order No. :

Issued by : Jorie Ballun
Quotation No. : J_B1598 - Fliteway
Certified By :

Date : 04/01/2016
Rev. : 0

Operating Conditions

Liquid:	Water
Temp.:	70.0 deg F
S.G./Visc.:	1.000/1.000 cp
Flow:	588.9 gpm
TDH:	89.6 ft
NPSHa:	0.0 ft
Solid size:	
% Susp. Solids (by wtg):	
Max. Solids Size:	0.6250 in

Pump Performance @ 1750 RPM

Published Efficiency:	77.0 %	Suction Specific Speed:	9,877 gpm(US) ft
Rated Pump Efficiency:	77.0 %	Min. Hydraulic Flow:	150.0 gpm
Rated Total Power:	17.2 hp	Min. Thermal Flow:	N/A
Non-Overloading Power:	20.0 hp		
Imp. Dia. First 1 Stg(s):	10.0000 in		
NPSHr:	6.8 ft		
Shut off Head:	102.0 ft		
Vapor Press:			

Notes: 1 . Elevated temperature effects on performance are not included.

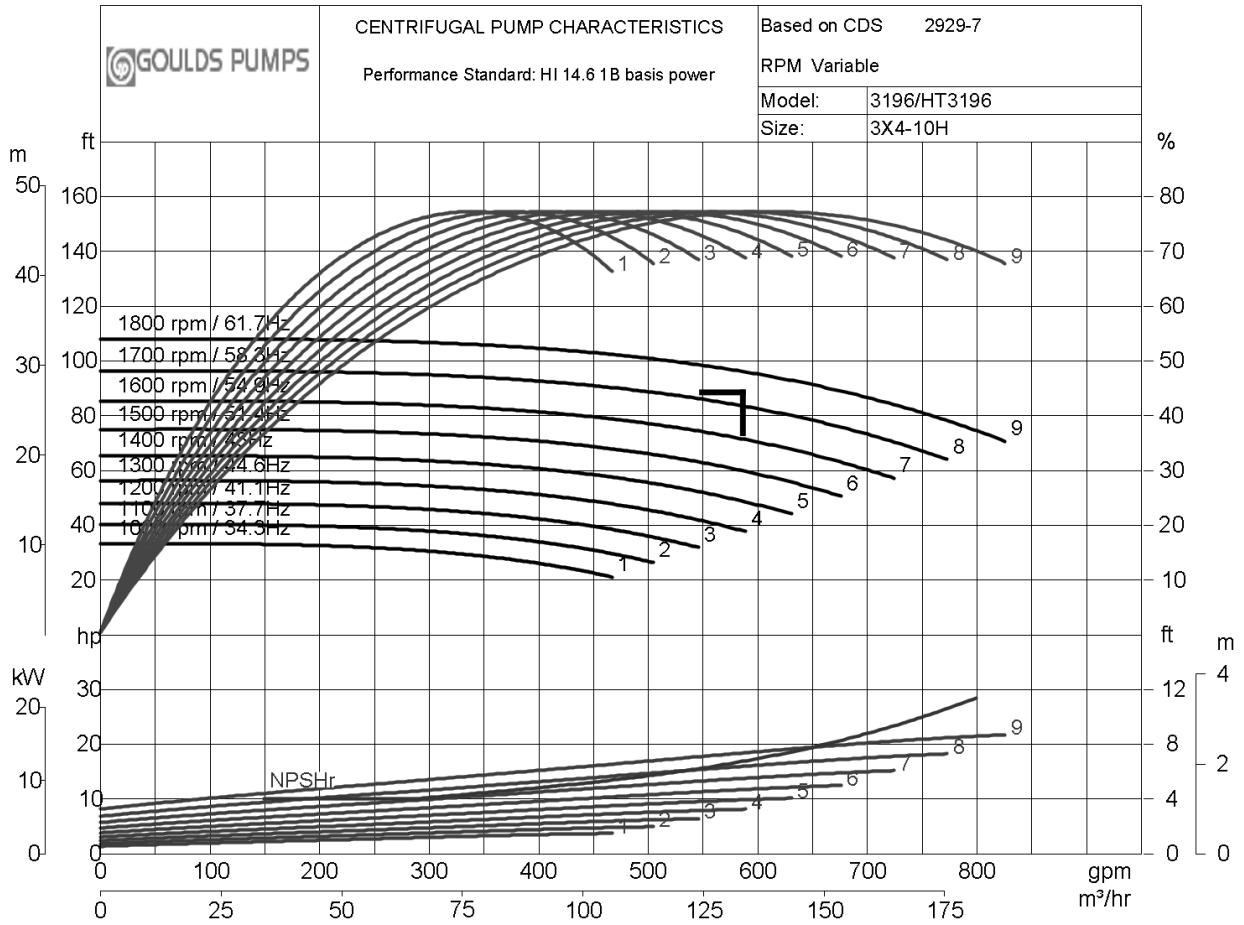

See Feed Pump Skid Section

Fliteway Technologies, Inc.

Treated Water Pump VFD - Control Panel

2129 East Birchwood Ave. Cudahy, WI 53110

(414) 483-5600 1-800-236-3580 FAX (414) 483-1957

FEED PUMP SKID #1

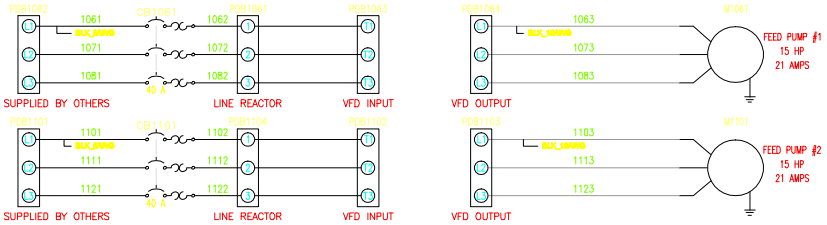

HIGH VOLTAGE PANEL

VFD FEED PUMP #1 WIRING

VFD_TB_12	VFD FAULT - PROVIDED OVER ETHERNET
VFD_TB_13	
VFD_TB_15	VFD RUNNING - PROVIDED OVER ETHERNET
VFD_TB_16	
VFD_TB_25	N
VFD_TB_28	120VAC VFD RUN SIGNAL (FROM MCP)

VFD FEED PUMP #2 WIRING

VFD_TB_12	VFD FAULT - PROVIDED OVER ETHERNET
VFD_TB_13	
VFD_TB_15	VFD RUNNING - PROVIDED OVER ETHERNET
VFD_TB_16	
VFD_TB_25	N
VFD_TB_28	120VAC VFD RUN SIGNAL (FROM MCP)

LOW VOLTAGE JUNCTION BOX

LOW VOLTAGE JBOX

HHL_F/S	120VAC OR 24VDC CONTROL POWER
HHL_F/S	TANK HHL ALARM (DRY CONTACT)
LL_F/S	
LL_F/S	TANK LLL (DRY CONTACT)
PRS._SW	
PRS._SW	HIGH PRESSURE SWITCH ALARM (N.O. DRY CONTACT)
FLOW_METER	24VDC CONTROL POWER
FLOW_METER	FLOW METER 4-20mA SIGNAL
FLOW_METER	FLOW METER SHIELD WIRE
P1_THRM_OL	120VAC CONTROL POWER
P1_THRM_OL	FEED PUMP #1 MOTOR THERMAL OVERLOAD WIRED TO VFD, VIEWED OVER ETHERNET
P2_THRM_OL	
P2_THRM_OL	FEED PUMP #2 MOTOR THERMAL OVERLOAD WIRED TO VFD, VIEWED OVER ETHERNET
LVL_TRANS	24VDC CONTROL POWER
LVL_TRANS	LEVEL TRANSMITTER 4-20mA SIGNAL
LVL_TRANS	LEVEL TRANSMITTER SHIELD WIRE

TREAT WATER PUMP SKID #2

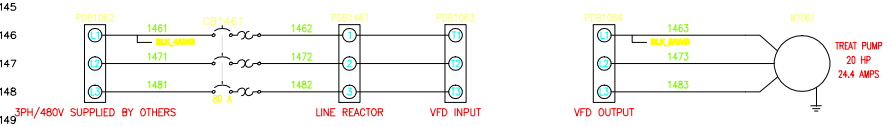

HIGH VOLTAGE PANEL

VFD TREAT PUMP WIRING

VFD_TB_12	VFD FAULT - PROVIDED OVER ETHERNET
VFD_TB_13	
VFD_TB_15	VFD RUNNING - PROVIDED OVER ETHERNET
VFD_TB_16	
VFD_TB_25	N
VFD_TB_28	120VAC VFD RUN SIGNAL (FROM MCP)

LOW VOLTAGE JUNCTION BOX

LOW VOLTAGE JBOX

HHL_F/S	120VAC OR 24VDC CONTROL POWER
HHL_F/S	TANK HHL ALARM (DRY CONTACT)
LL_F/S	
LL_F/S	TANK LLL (DRY CONTACT)
PRS._SW	
PRS._SW	HIGH PRESSURE SWITCH ALARM (N.O. DRY CONTACT)
FM_24V	24VDC CONTROL POWER
FM_TR	FLOW METER 4-20mA SIGNAL
FM_S	FLOW METER SHIELD WIRE
TP_THRM_OL	120VAC CONTROL POWER
TP_THRM_OL	TREATMENT PUMP MOTOR THERMAL OVERLOAD WIRED TO VFD, VIEWED OVER ETHERNET
LVL_TRANS	24VDC CONTROL POWER
LVL_TRANS	LEVEL TRANSMITTER 4-20mA SIGNAL
LVL_TRANS	LEVEL TRANSMITTER SHIELD WIRE

THIS PRINT AND ITS CONTENTS ARE THE PROPERTY OF FLITEWAY AND MUST NOT BE USED FOR ANY PURPOSE NOT AUTHORIZED BY FLITEWAY. DO NOT DISCLOSE, REPRODUCE OR OTHERWISE USE THIS PRINT OR ITS CONTENTS IN ANY MANNER DETRIMENTAL TO THE INTEREST OF FLITEWAY WITHOUT FLITEWAY'S PRIOR WRITTEN CONSENT. FLITEWAY RESERVES ALL RIGHTS OF DESIGN AND INVENTION TO THE EXTENT PERMITTED BY LAW.

CAD SYSTEM	ACADE
SCALE	1:1
UNITS	IN
FORMAT	D

Fliteway Technologies, Inc.
2129 East Birchwood Ave.
Cudahy, WI 53110

DRAWN BY	Josh
Q #	Q14617 R2
DESIGNED FOR	TECHSAS, Inc.
DESCRIPTION	
Drawing Number	

PLOTTED : 12-16-2014

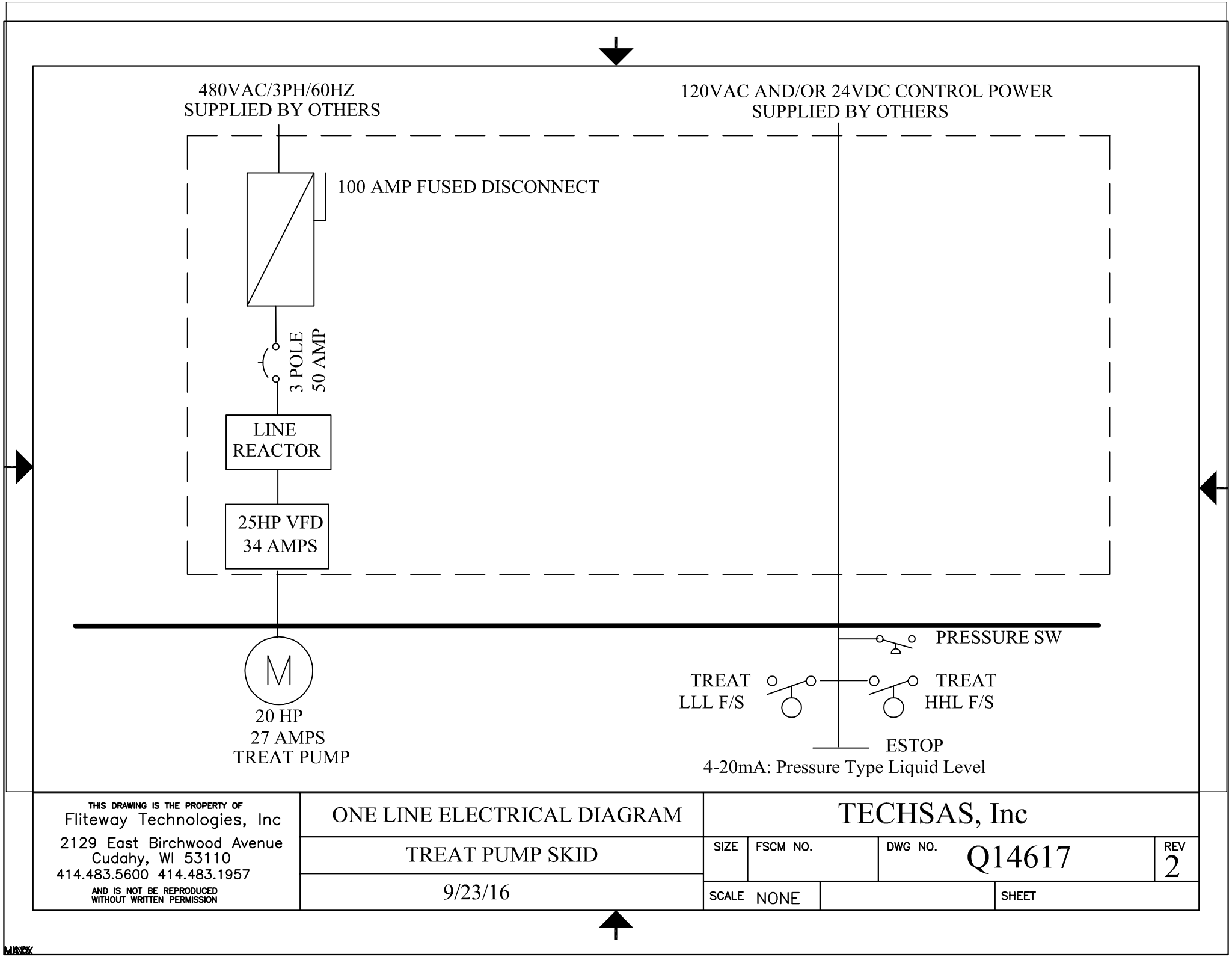

THIS DRAWING IS THE PROPERTY OF
Fliteway Technologies, Inc
2129 East Birchwood Avenue
Cudahy, WI 53110
414.483.5600 414.483.1957
AND IS NOT BE REPRODUCED
WITHOUT WRITTEN PERMISSION

ONE LINE ELECTRICAL DIAGRAM

TREAT PUMP SKID

9/23/16

TECHSAS, Inc

SIZE	FSCM NO.	DWG NO.	REV
		Q14617	2

SCALE NONE | SHEET

See Feed Pump VFD – Control Panel Section

APPENDIX C

Record Drawings

(Provided on compact disc)

BULK FUELS FACILITY
GROUNDWATER TREATMENT SYSTEM EXPANSION*

KIRTLAND AIR FORCE BASE

ALBUQUERQUE, NEW MEXICO

CONTRACT No. W912DR-12-D-0006

DELIVERY ORDER DM01

RECORD DRAWINGS

DRAWING INDEX:

CIVIL

DRAWING NO.	DRAWING TITLE
C-001	COVER SHEET AND DRAWING INDEX

PIPING

DRAWING NO.	DRAWING TITLE
P-001	EQUIPMENT NOTES AND SCHEDULES
P-101	EQUIPMENT PLAN
P-201	EQUIPMENT SECTIONS SHEET 1 OF 3
P-202	EQUIPMENT SECTIONS SHEET 2 OF 3
P-203	EQUIPMENT SECTIONS SHEET 3 OF 3
P-301	PIPING SUPPORT PLAN
P-401	PIPING SUPPORT SECTIONS SHEET 1 OF 3
P-402	PIPING SUPPORT SECTIONS SHEET 2 OF 3
P-403	PIPING SUPPORT SECTIONS SHEET 3 OF 3

ELECTRICAL

DRAWING NO.	DRAWING TITLE
E-001	CP-100 CONTROL PANEL COMMUNICATION DIAGRAM

*NOTE

THE ORIGINAL DESIGN DRAWINGS AND SPECIFICATIONS FOR THE KIRTLAND BULK FUELS FACILITY (BFF) GROUND WATER TREATMENT SYSTEM (GWTS) WERE PREPARED BY CHICAGO BRIDGE & IRON COMPANY (CB&I). THE ORIGINAL DRAWINGS ARE TITLED "PHASE IV MID-PLUME PUMP & TREAT SYSTEM", CONTRACT NO. W912DY-10-D-0014 DATED 01/09/15. DRAWINGS FOR GWTS EXPANSION THAT SHOW EQUIPMENT TO BE INSTALLED HAVE BEEN CARRIED FORWARD AND ARE PROVIDED HERE FOR CONSTRUCTION. MINOR MODIFICATIONS HAVE BEEN MADE TO ORIGINAL DRAWINGS TO PROVIDE CLARITY FOR CONSTRUCTION OF THE SYSTEM EXPANSION. FOR TECHNICAL SPECIFICATIONS, SEE CB&I KIRTLAND AIR FORCE BASE PHASE IV (TREATMENT PLANT) MID PLUME PUMP AND TREAT SYSTEM TECHNICAL SPECIFICATIONS DATED 03/13/15.

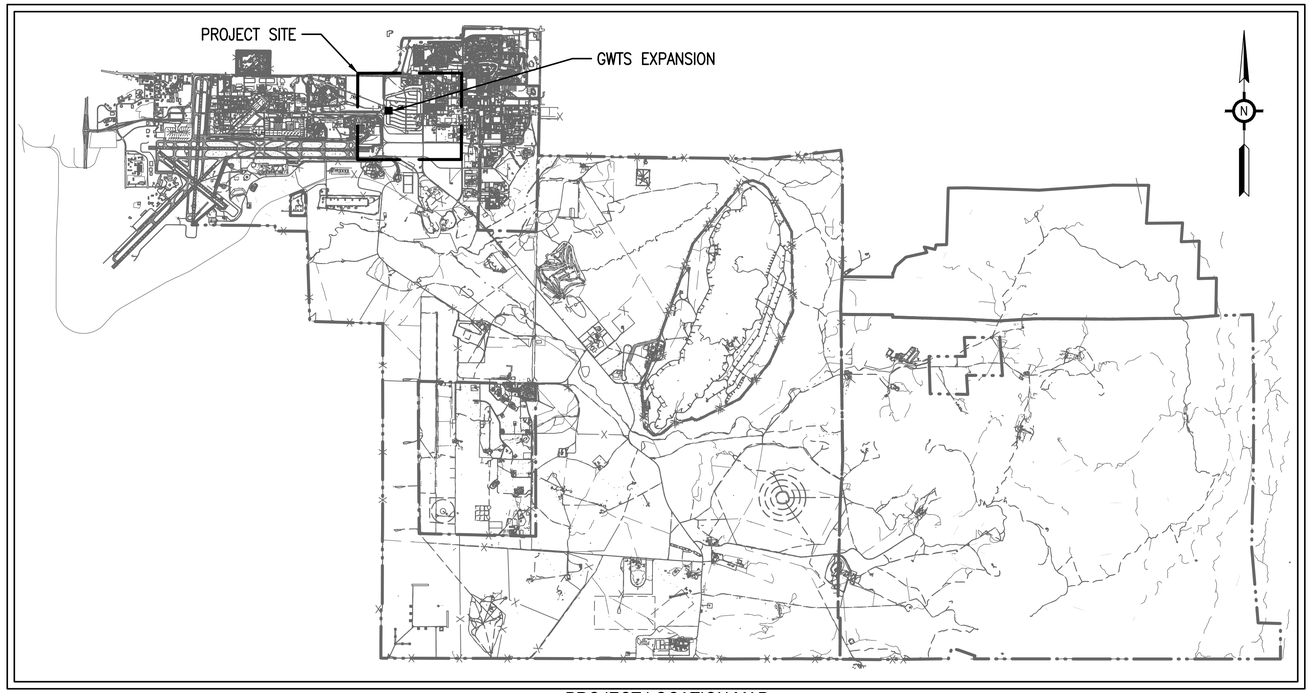

PROJECT LOCATION MAP

REVISIONS

NO.	DATE	BY	DESCRIPTION
1	3/31/17	LAW	RECORD DRAWINGS

DESIGN INFORMATION

DESIGNED BY: HLB

DRAWN BY: LLR

CHECKED BY: JMR

PROJECT MANAGER: DEJ

SEAL

THIS ASBUILT (RECORD DRAWING) HAS BEEN PREPARED, IN PART, BASED UPON INFORMATION FURNISHED BY OTHERS. WHILE THIS INFORMATION IS BELIEVED TO BE RELIABLE, EA ASSUMES NO RESPONSIBILITY FOR ITS ACCURACY. EA DOES NOT WARRANT THIS RECORD DRAWING OR FOR ANY ERRORS OR OMISSIONS THAT MAY HAVE BEEN INCORPORATED HEREIN AS A RESULT OF INCORRECT INFORMATION PROVIDED TO EA. THOSE RELYING ON THIS RECORD DOCUMENT ARE ADVISED TO OBTAIN INDEPENDENT VERIFICATION OF ITS ACCURACY.

BULK FUELS FACILITY
GROUNDWATER TREATMENT SYSTEM EXPANSION
BERNALILLO COUNTY, NEW MEXICO

COVER SHEET AND DRAWING INDEX

EA Engineering, Science, and Technology, Inc., PBC.
221 Sun Valley Boulevard; Suite D
Lincoln, NE 68528
(402) 476-3766

DATE:SEPTEMBER 2016

PROJECT NUMBER: 62599DM01

C-001

SHEET: 1 OF 11

FILE PATH: F:\FEDERAL\000\AFCEC\PROJECTS\62599DM01 - KIRTLAND BFF\CADD\RECORD DRAWINGS\62599DM01-C-001 COVER.DWG [LAYOUT] 3/21/17 lwilke

MECHANICAL GENERAL NOTES

SPECIFICATIONS:

PART 1 GENERAL

1.1 SCOPE OF WORK

A. FURNISH ALL LABOR, INSTALL ALL MATERIALS AND EQUIPMENT SERVICES AND INCIDENTIALS TO THE PROPER INSTALLATION OF WORK DETAILS.

B. GUARANTEE WORK TO BE FREE OF DEFECTS OF MATERIAL AND WORKMANSHIP FOR A PERIOD OF ONE YEAR AFTER DATE OF FINAL ACCEPTANCE OR AS REQUIRED BY SPECIFICATION AS APPLICABLE.

C. OBTAIN AND PAY FOR ALL REQUIRED PERMITS, FEES, AND INSPECTIONS, COORDINATE WITH ALL OTHER TRADES, APPLICABLE SPECIFICATIONS, DRAWINGS AND OWNER'S DIRECTIONS.

1.2 GENERAL CONDITIONS

A. SURVEY THE JOB SITE TO OBTAIN A FULL UNDERSTANDING OF THE WORK INVOLVED. ADDITIONAL FEES WILL NOT BE PAID FOR MISSED OR OVERLOOKED CONDITIONS REQUIRING ADDITIONAL WORK IF DETERMINED BY THE ENGINEER THAT SAID CONDITIONS COULD HAVE BEEN REASONABLY DETECTED DURING THE JOB SURVEY.

B. THE MECHANICAL DRAWINGS SHOW THE RELATIONSHIP BETWEEN EQUIPMENT AND SITE CONDITIONS. DO NOT SCALE THE DRAWINGS FOR EXACT SIZE OR LOCATIONS. FABRICATION AND/OR INSTALLATION DETAILS ARE MORE SPECIFIC AND SHOULD BE CLOSELY FOLLOWED.

C. THE MECHANICAL COMPONENTS SHALL BE INSTALLED IN ACCORDANCE WITH MANUFACTURER'S RECOMMENDATIONS, THE LOCAL / STATE BUILDING AND RELATED CONSTRUCTION CODES.

1.3 SYSTEM DESCRIPTION

A. EQUIPMENT SELECTIONS AS REPRESENTED ON DRAWINGS ARE FOR DESIGN PURPOSES ONLY. EQUIPMENT TYPE, PHYSICAL SIZE, WEIGHT, CAPACITIES AND PERFORMANCE CHARACTERISTICS SHALL BE GOVERNING FACTORS IN SUBMITTING "OR EQUALS" FOR REVIEW AND APPROVAL.

B. SUPPORT SYSTEMS HAVE BEEN DESIGNED FOR THE COMPONENTS AND PIPING SYSTEMS WITH SPECIFIED SPANS AND COMPONENT SUPPLIER RECOMMENDATIONS FOR SUPPORT / ANCHORING. THE ABSENCE OF SUPPORT DETAILS ON THE CONTRACT DRAWINGS DOES NOT RELIEVE THE CONTRACTOR OF THE RESPONSIBILITY FOR PROVIDING SUPPORTS / ANCHORS.

1.4 SUBMITTALS AND ACCEPTANCE

A. CONTRACTOR SHALL REPAIR, REPLACE, OR REPAINT TO MATCH ANY SURFACES OR COMPONENTS DAMAGED BY THE CONTRACTOR DURING THE INSTALLATION OF EQUIPMENT AND SYSTEMS.

B. CONTRACTOR SHALL REMOVE FROM THE JOB SITE ANY MATERIALS THAT ARE NOT USED OR NOT ECONOMICALLY RECOVERABLE.

C. EQUIPMENT SHOP DRAWINGS AND SUPPORT SYSTEM DETAIL DRAWINGS WILL SHOW PIPING SYSTEMS AND APPURTENANCES, SUCH AS MECHANICAL JOINTS, VALVES, LOCAL INSTRUMENTATION AND PIPE SUPPORTS. AS-BUILT DRAWINGS WILL SHOW PIPE SUPPORTS, AND LAYOUT OF PIPING SYSTEMS RELATIVE TO OTHER PARTS OF THE WORK INCLUDING CLEARANCES FOR MAINTENANCE AND OPERATION.

D. THE NAMES OF ALL QUALIFIED WELDERS, THEIR IDENTIFYING SYMBOLS, AND THE QUALIFYING PROCEDURES FOR EACH WELDER INCLUDING SUPPORT DATA SUCH AS TEST PROCEDURES USED, STANDARDS TESTED TO, ETC.

E. THE METHOD PROPOSED FOR DISPOSAL OF WASTE WATER FROM HYDROSTATIC TESTS AND ALL REQUIRED PERMITS, PRIOR TO PERFORMING HYDROSTATIC TESTS.

F. A SIGNED STATEMENT CERTIFYING THAT THE INSTALLATION IS SATISFACTORY AND IN ACCORDANCE WITH THE CONTRACT DRAWINGS, SPECIFICATIONS, AND THE MANUFACTURER'S PRESCRIBED PROCEDURES AND TECHNIQUES, UPON COMPLETION OF THE PROJECT AND BEFORE FINAL ACCEPTANCE.

G. THE MANUFACTURER'S INSTALLATION RECOMMENDATIONS OR INSTRUCTIONS FOR EACH MATERIAL OR PROCEDURE TO BE UTILIZED, INCLUDING MATERIALS PREPARATION.

H. A LIST OF ANY SPECIAL TOOLS NECESSARY FOR EACH PIPING SYSTEM AND APPURTENANCES FURNISHED FOR ADJUSTMENT, OPERATION, MAINTENANCE AND DISASSEMBLY OF THE SYSTEM.

I. HYDROSTATIC TEST REPORT.

1.5 DESIGN REQUIREMENTS

A. SUPPORT SYSTEMS SHALL BE SELECTED AND DESIGNED IN ACCORDANCE WITH MSS SP-58 AND MSS SP-69 WITHIN THE SPECIFIED SPANS AND COMPONENT REQUIREMENTS. THE ABSENCE OF PIPE SUPPORTS AND DETAILS ON THE CONTRACT DRAWINGS DOES NOT RELIEVE THE CONTRACTOR OF RESPONSIBILITY FOR SIZING AND PROVIDING SUPPORTS THROUGHOUT FACILITY.

B. BOTH BURIED AND ABOVE GRADE PIPING SYSTEMS SHALL BE SUITABLE FOR DESIGN CONDITIONS, CONSIDERING THE PIPING BOTH WITH AND WITHOUT INTERNAL PRESSURE, AND INSTALLATION FACTORS SUCH AS INSULATION, SUPPORT SPANS, AND AMBIENT TEMPERATURES. CONSIDERATION SHALL BE GIVEN TO ALL OPERATING AND SERVICE CONDITIONS BOTH INTERNAL AND EXTERNAL TO THE PIPING SYSTEMS. FLOOR AND WALL PENETRATIONS SHALL BE VERIFIED AND THE SIZE AND LOCATION COORDINATED BEFORE FORMING AND PLACING CONCRETE.

1.6 REFERENCES

A. AMERICAN NATIONAL STANDARDS INSTITUTE (ANSI)

B. AMERICAN SOCIETY OF MECHANICAL ENGINEERS (ASME)

C. AMERICAN SOCIETY FOR TESTING AND MATERIALS (ASTM)

D. CODE OF FEDERAL REGULATIONS (CFR)

E. MANUFACTURER'S STANDARDIZATION SOCIETY (MSS)

F. SPECIFICATION: CB&I PHASE IV MID-PLUME PUMP & TREAT SYSTEM EXPANSION DRAWINGS – MISCELLANEOUS METAL FABRICATIONS (PIPE SUPPORTS)

G. SPECIFICATION: CB&I PHASE IV MID-PLUME PUMP & TREAT SYSTEM EXPANSION DRAWINGS – PIPELINES, LIQUID PROCESS PIPING

H. SPECIFICATION: CB&I PHASE IV MID-PLUME PUMP & TREAT SYSTEM EXPANSION DRAWINGS – WELDING PROCESS PIPING

I. SPECIFICATION: CB&I PHASE IV MID-PLUME PUMP & TREAT SYSTEM EXPANSION DRAWINGS – PAINTS AND COATINGS (EQUIPMENT, PROCESS PIPING, AND METALS)

1.7 DELIVERY, STORAGE, AND HANDLING

A. MATERIALS DELIVERED AND PLACED IN STORAGE SHALL BE STORED WITH PROTECTION FROM THE WEATHER, EXCESSIVE HUMIDITY VARIATION, EXCESSIVE TEMPERATURE VARIATION, DIRT, DUST AND/OR OTHER CONTAMINANTS. PROPER PROTECTION AND CARE OF MATERIAL BEFORE, DURING AND AFTER INSTALLATION IS THE CONTRACTOR'S RESPONSIBILITY. ANY MATERIAL FOUND TO BE DAMAGED SHALL BE REPLACED AT THE CONTRACTOR'S EXPENSE. DURING INSTALLATION, PIPING SHALL BE CAPPED TO KEEP OUT DIRT AND OTHER FOREIGN MATTER.

PART 2 PRODUCTS

2.1 MATERIALS, EQUIPMENT AND STANDARD PRODUCTS

A. PROVIDE PIPING MATERIALS AND APPURTENANCES AS SPECIFIED AND AS SHOWN ON THE DRAWINGS, AND SUITABLE FOR THE SERVICE INTENDED. PIPING MATERIALS, APPURTENANCES, AND EQUIPMENT SUPPLIED AS PART OF THIS CONTRACT SHALL BE OF EQUAL MATERIAL AND RATINGS AS THE CONNECTING PIPE, NEW AND UNUSED EXCEPT FOR TESTING EQUIPMENT. COMPONENTS THAT SERVE THE SAME FUNCTION AND ARE THE SAME SIZE SHALL BE IDENTICAL PRODUCTS OF THE SAME MANUFACTURER. THE GENERAL MATERIALS TO BE USED FOR THE PIPING SYSTEMS SHALL BE IN ACCORDANCE WITH THE PROCESS AND INSTRUMENTATION DIAGRAMS (P&ID'S) (SEE CB&I PHASE IV MID-PLUME PUMP & TREAT SYSTEM EXPANSION DRAWINGS) AND MECHANICAL PIPING DRAWINGS. PIPE FITTINGS SHALL BE COMPATIBLE WITH THE APPLICABLE PIPE MATERIALS.

B. PROVIDE MATERIAL AND EQUIPMENT WHICH ARE THE STANDARD PRODUCTS OF A MANUFACTURER REGULARLY ENGAGED IN THE MANUFACTURING OF THE PRODUCTS AND THAT ESSENTIALLY DUPLICATE ITEMS THAT HAVE BEEN IN SATISFACTORY USE FOR AT LEAST 2 YEARS PRIOR TO BID OPENING. NOMINAL SIZES FOR STANDARDIZED PRODUCTS SHALL BE USED. PIPE, VALVES, FITTINGS AND APPURTENANCES SHALL BE SUPPORTED BY A SERVICE ORGANIZATION THAT IS, IN THE OPINION OF THE CONTRACTING OFFICER, REASONABLY CONVENIENT TO THE SITE.

2.2 CARBON STEEL PIPING SYSTEM

A. ALL PIPING AND FITTINGS SHALL CONFORM TO THE FOLLOWING, UNLESS OTHERWISE INDICATED ON MECHANICAL PIPING DRAWINGS. CARBON STEEL PIPE SHALL MEET THE REQUIREMENTS OF ASTM A 53/A 53M SEAMLESS, GRADE B, SCHEDULE 40.

B. CARBON STEEL PIPING SHALL BE JOINED BY WELDING. DIELECTRIC FITTINGS OR ISOLATION JOINTS SHALL BE PROVIDED BETWEEN ALL DISSIMILAR METALS.

C. FITTINGS SHALL BE CARBON STEEL.

D. WELDING FITTINGS SHALL BE BUTT-WELDING. WELDING FITTINGS SHALL BE FORGED STEEL, CLASS 150 LOW-CARBON STEEL, ASTM A 234/ A 234 M SEAMLESS CONFORMING TO ASME B16.9.

E. THE INTERNAL DIAMETER BORES OF FLANGES AND FLANGED FITTINGS SHALL BE THE SAME AS THAT OF THE ASSOCIATED PIPE. THE FLANGES SHALL BE SLIP-ON TYPE. FLANGES AND FLANGED FITTINGS SHALL BE FORGED STEEL, ASTM A 105/A 105M OR WROUGHT CARBON STEEL, ASTM A 234/A234M, FACED AND DRILLED TO ASME B16.5 CLASS 150 WITH A 0.0625 INCH RAISED FACE. CAST STEEL BACKING FLANGES, ASTM A 216/A 216M GRADE WCA BOLTING SHALL BE ALLOY-STEEL ASTM A 193/A 193M GRADE B5 HEX HEAD BOLTS AND ASTM A 194/A 194M GRADE 8 HEX HEAD NUTS. WHEN MATING FLANGE ON VALVES OR EQUIPMENT IS CAST IRON, ASTM A 193/A 193M GRADE B8 CLASS 1BOLTS AND ASTM A 194/A 194M GRADE 8 HEAVY HEX HEAD NUTS SHALL BE USED. BOLTS SHALL BE PROVIDED WITH WASHERS OF THE SAME MATERIAL AS THE BOLTS. GASKETS SHALL MEET THE REQUIREMENTS OF ASME B16.5. NONMETALLIC GASKETS SHALL CONFORM TO ASME B16.21 AND BE A 0.125 INCH THICK CHLOROPRENE RUBBER, DUROMETER HARDNESS NO.80; 1,500 PSI MINIMUM TENSILE STRENGTH; 125 PERCENT MINIMUM ELONGATIONS AND FLAT RING TYPE FOR USE WITH RAISED FACE FLANGES.

F. IN CASES WHERE THE MATING FLANGES FOR EQUIPMENT, VALVES, AND SPECIALTY ITEMS ARE FLAT-FACED FLANGES, A SUBSTITUTE SLIP-ON TYPE FLAT-FACED FLANGE ON THE PIPING END SHOULD BE USED. FILLER FLANGES ARE ACCEPTABLE WITH PROPER GASKETS AND PRIOR APPROVAL FROM ENGINEERING.

2.3 VALVES

A. ALL VALVES SHALL CONFORM TO THE FOLLOWING UNLESS OTHERWISE SPECIFIED ON THE MECHANICAL PIPING DRAWINGS.

B. VALVES SHALL INCLUDE OPERATOR, ACTUATOR, HAND WHEEL, CHAIN WHEEL, EXTENSION STEM, FLOOR STAND, WORM AND GEAR OPERATOR, OPERATING NUT, CHAIN, WRENCH, AND ALL OTHER ACCESSORIES REQUIRED FOR A COMPLETE OPERATION. THE VALVES SHALL BE SUITABLE FOR THE INTENDED SERVICE. VALVES SHALL BE THE SAME SIZE AS ADJOINING PIPE UNLESS OTHERWISE INDICATED ON DRAWINGS. VALVE ENDS SHALL BE COMPATIBLE WITH ADJACENT PIPING SYSTEM. VALVES SHALL HAVE THE ABILITY TO EXCEPT LOCKS FOR LOCKOUT TAG, OUT REQUIREMENTS.

C. BALL VALVES, 2-INCH AND SMALLER, SHALL BE END ENTRY TYPE WITH BRONZE BODIES AND THREADED ENDS. VALVES SHALL HAVE POLYTETRAFLUOROETHYLENE (PTFE) PACKING AND SEATS, A STAINLESS STEEL BALL, REGULAR PORTS, AND HAND LEVER OPERATORS. VALVES SHALL BE RATED FOR 150 PSIG SERVICE AT 150 DEGREES F.

D. BUTTERFLY VALVES, 2- INCH AND LARGER, SHALL HAVE DUCTILE IRON BODIES; LUGGED STYLE. VALVES SHALL CONFORM TO AWWA C504 CLASS 125. DISCS SHALL BE CONTOURED AND NYLON COATED. THE VALVE SHAFTS SHALL BE STAINLESS STEEL WITH SELF-LUBRICATING, CORROSION-RESISTANT SLEEVE TYPE BEARINGS. VALVE SEATS SHALL BE ATTACHED TO EITHER THE VALVE BODY OR THE DISC AND SHALL BE CONSTRUCTED OF EPDM. VALVES 4-INCHES AND SMALLER SHALL HAVE MANUAL, LOCKING HAND LEVER OPERATORS. VALVES LARGER THAN 4-INCHES SHALL HAVE HAND WHEEL WITH GEAR OPERATORS.

E. GLOBE VALVES 3 INCH AND SMALLER, SHALL HAVE CARBON STEEL BODIES AND BONNETS, WITH STAINLESS STEEL TRIM. VALVES SHALL CONFORM TO ASME B16.34 CLASS 150, THREADED END CONNECTIONS. VALVES SHALL INCLUDE BONNETS, INSIDE SCREWS, RISING STEMS, CONVENTIONAL DISCS AND RINGS. VALVES SHALL BE RATED FOR 150 PSIG SERVICE AT 150 DEGREES F.

2.4 PIPING COMPONENTS

A. ALL PIPELINE LOW POINTS SHALL BE DRAINED. DRAIN VALVES SHALL BE LOCATED AS SHOWN ON MECHANICAL DRAWINGS.

B. PROCESS INTERCONNECTING PIPE SHALL BE CAPABLE OF BEING SAMPLED. SAMPLE VALVE SHALL BE LOCATED AS SHOWN ON MECHANICAL DRAWINGS.

C. COMBINATION AIR RELEASE VALVES SHALL BE INSTALLED AS NEEDED IN THE PIPELINE TO PREVENT UNCONTROLLED TRANSFER OF WATER BETWEEN VESSELS AND / OR THE BUILDING INFLUENT OR EFFLUENT CONNECTIONS. COMBINATION AIR RELEASE VALVES SHALL BE INSTALLED AS SHOWN ON MECHANICAL DRAWINGS.

D. BACKFLOW PREVENTERS SHALL BE INSTALLED AS SHOWN ON MECHANICAL DRAWINGS.

E. PUMP SUCTION PIPING SHALL BE PROVIDED WITH A LINE SIZE FLANGED SIMPLEX Y-PATTERN BODY STRAINER. THE STRAINER SHALL BE RATED FOR 150 PSIG SERVICE AT 150 DEGREES F.

2.5 PIPE SUPPORTS AND PENETRATIONS

A. PROVIDE AUXILIARY STEEL WHERE THE SUPPORT OF PIPING SYSTEMS AND EQUIPMENT IS REQUIRED BETWEEN BUILDING STRUCTURAL ELEMENTS. REFER TO STRUCTURAL DRAWINGS (SEE CB&I PHASE IV MID-PLUME PUMP & TREAT SYSTEM EXPANSION DRAWINGS) FOR SPECIFIC DETAILS AND SUPPORT CONFIGURATIONS.

B. PIPE SUPPORTS SHALL CONFORM TO THE REQUIREMENTS OF MSS SP-69, AND MSS SP-58. WHERE PIPE SUPPORTS CONTACT BARE PIPING OR IN-LINE DEVICES, PROVIDE SUPPORTS OF COMPATIBLE MATERIAL SO THAT NEITHER SHALL HAVE A DETERIORATING ACTION ON THE OTHER.

C. REFER TO STRUCTURAL DRAWINGS (SEE CB&I PHASE IV MID-PLUME PUMP & TREAT SYSTEM EXPANSION DRAWINGS) FOR TYPES AND LOCATIONS OF WALL PENETRATIONS AND ANCHORS.

PART 3 EXECUTION

3.1 EXAMINATION AND PREPARATION

A. AFTER BECOMING FAMILIAR WITH ALL DETAILS OF THE WORK, VERIFY ALL DIMENSIONS IN THE FIELD, AND ADVISE THE CONTRACTING OFFICER OF ANY DISCREPANCY BEFORE PERFORMING THE WORK.

B. PIPE AND EQUIPMENT OPENINGS SHALL BE CLOSED WITH CAPS OR PLUGS DURING INSTALLATION. EQUIPMENT SHALL BE PROTECTED FROM DIRT, WATER, AND CHEMICAL OR MECHANICAL DAMAGE.

C. NOTIFY THE CONTRACTING OFFICER AT LEAST 2 WEEKS PRIOR TO THE FIELD FABRICATION OF PIPE OR FITTINGS AND AT LEAST 3 DAYS PRIOR TO THE START OF ANY SURFACE PREPARATION OR COATING APPLICATION WORK. WELDING ELECTRODES SHALL BE PROVIDED IN ACCORDANCE WITH THE APPLICABLE BASE METALS AND WELDING PROCESS. FABRICATION OF FITTINGS SHALL BE PERFORMED IN ACCORDANCE WITH THE MANUFACTURER'S INSTRUCTIONS.

3.2 EXPOSED PIPING INSTALLATION

A. EXPOSED PIPING SHALL BE RUN AS STRAIGHT AS PRACTICAL ALONG THE ALIGNMENT SHOWN ON THE CONTRACT DRAWINGS AND WITH A MINIMUM OF JOINTS. PIPING AND APPURTENANCES SHALL BE INSTALLED IN CONFORMANCE WITH REVIEWED SHOP DRAWINGS, MANUFACTURER'S INSTRUCTIONS AND ASME B31.3. PIPING SHALL BE INSTALLED WITHOUT SPRINGING OR FORCING THE PIPE.

B. PIPES SHALL BE THOROUGHLY CLEANED OF OIL, SCALE, RUST, AND DIRT IN ORDER TO PROVIDE A CLEAN SEAT FOR GASKETS. GASKETS SHALL BE WIPED CLEAN PRIOR TO INSTALLATION. FLEXIBLE COUPLINGS AND FLANGED COUPLING ADAPTER GASKETS SHALL BE LUBRICATED WITH THE MANUFACTURER'S STANDARD LUBRICANT BEFORE INSTALLATION ON THE PIPE ENDS. COUPLINGS, SERVICE SADDLES, AND ANCHOR STUDS SHALL BE INSTALLED IN ACCORDANCE WITH MANUFACTURER'S INSTRUCTIONS. BOLTS SHALL BE TIGHTENED PROGRESSIVELY, DRAWING UP BOLTS ON OPPOSITE SIDES A LITTLE AT A TIME UNTIL ALL BOLTS HAVE A UNIFORM TIGHTNESS. TORQUE-LIMITING WRENCHES SHALL BE USED TO TIGHTEN BOLTS.

C. PIPE FLANGES SHALL BE SET LEVEL, PLUMB, AND ALIGNED. FLANGED FITTINGS SHALL BE INSTALLED TRUE AND PERPENDICULAR TO THE AXIS OF THE PIPE. THE BOLT HOLES SHALL BE CONCENTRIC TO THE CENTERLINE OF THE PIPE.

D. VALVES SHALL BE LOCATED IN ACCORDANCE WITH THE CONTRACT DRAWINGS WHERE ACTUATORS ARE SHOWN. WHERE ACTUATORS ARE NOT SHOWN, VALVES SHALL BE LOCATED AND ORIENTED TO PERMIT EASY ACCESS TO THE VALVE OPERATOR, AND TO AVOID INTERFERENCES.

3.3 VALVE INSTALLATION

A. FLANGED VALVE BOLT HOLES SHALL BE INSTALLED SO AS TO STRADDLE THE VERTICAL CENTERLINE OF PIPE. FLANGED FACES SHALL BE CLEANED PRIOR TO INSERTING THE GASKET AND BOLTS, AND THEN THE NUTS SHALL BE TIGHTENED PROGRESSIVELY AND UNIFORMLY. THREADED ENDS SHALL HAVE THE THREADS CLEANED BY WIRE BRUSHING OR SWABBING PRIOR TO INSTALLATION.

B. THE OPERATING STEM OF A MANUAL VALVE SHALL BE INSTALLED IN A VERTICAL POSITION WHEN THE VALVE IS INSTALLED IN HORIZONTAL RUNS OF PIPE HAVING CENTERLINE ELEVATIONS 4.5 FEET OR LESS ABOVE FINISHED FLOOR, UNLESS OTHERWISE SHOWN ON MECHANICAL PIPING DRAWINGS. THE OPERATING STEM OF A MANUAL VALVE SHALL BE INSTALLED IN A HORIZONTAL POSITION IN HORIZONTAL RUNS OF PIPE HAVING CENTERLINE ELEVATIONS BETWEEN 4.5 FEET AND 6.75 FEET ABOVE FINISH FLOOR, UNLESS OTHERWISE SHOWN ON MECHANICAL PIPING DRAWINGS. AUTOMATIC VALVES SHALL BE INSTALLED IN ACCORDANCE WITH THE MANUFACTURER'S INSTRUCTIONS.

3.4 PIPING SUPPORT SYSTEMS INSTALLATION

A. THE ABSENCE OF PIPE SUPPORTS AND DETAILS ON THE MECHANICAL PIPING DRAWINGS SHALL NOT RELIEVE THE CONTRACTOR OF RESPONSIBILITY FOR SIZING AND PROVIDING SUPPORTS THROUGHOUT PLANT.

B. PIPE SUPPORT SYSTEMS SHALL MEET THE REQUIREMENTS OF MSS SP-58. CONTRACTOR-DESIGNED AND SELECTED SUPPORT SYSTEMS SHALL BE INSTALLED IN ACCORDANCE WITH MSS SP-69, AND AS SPECIFIED HEREIN. PIPING CONNECTIONS TO EQUIPMENT SHALL BE SUPPORTED BY PIPE SUPPORTS AND NOT OFF THE EQUIPMENT. LARGE OR HEAVY VALVES, FITTINGS, AND/OR EQUIPMENT SHALL BE SUPPORTED INDEPENDENTLY OF ASSOCIATED PIPING. PIPES SHALL NOT BE SUPPORTED OFF OTHER PIPES. SUPPORTS SHALL BE PROVIDED AT PIPING CHANGES IN DIRECTION OR IN ELEVATION, ADJACENT TO FLEXIBLE JOINTS AND COUPLINGS, AND WHERE OTHERWISE SHOWN ON THE CONTRACT DRAWINGS. PIPE SUPPORTS AND HANGERS SHALL NOT BE INSTALLED IN EQUIPMENT ACCESS AREAS OR BRIDGE CRANE RUNS. HANGING PIPES SHALL BE BRACED AGAINST HORIZONTAL MOVEMENT BY BOTH LONGITUDINAL AND LATERAL SWAY BRACING. AT EACH CHANNEL TYPE SUPPORT, EVERY PIPE SHALL BE PROVIDED WITH AN INTERMEDIATE PIPE GUIDE, EXCEPT WHERE PIPE ANCHORS ARE REQUIRED. EXISTING SUPPORT SYSTEMS MAY BE USED TO SUPPORT ADDITIONAL NEW PIPING ONLY IF THE CONTRACTOR CAN DEMONSTRATE THAT THE EXISTING SUPPORT SYSTEMS ARE ADEQUATE FOR THE ADDITIONAL LOADS, OR IF THE EXISTING SYSTEMS ARE STRENGTHENED TO SUPPORT THE ADDITIONAL LOADS. PEDESTAL TYPE PIPE SUPPORTS SHALL BE PROVIDED UNDER BASE FLANGES ADJACENT TO ROTATING EQUIPMENT AND WHERE REQUIRED TO ISOLATE VIBRATION. PIPING 2.5 INCH IN DIAMETER AND LARGER SHALL BE BRACED FOR SEISMIC FORCES. LATERAL SUPPORTS FOR SEISMIC LOADS SHALL BE INSTALLED AT ALL CHANGES IN DIRECTION.

3.5 PIPE PAINTING, COLOR CODING AND IDENTIFICATION

A. PAINT AND COLOR CODING REQUIREMENTS FOR EXPOSED PIPING SHALL BE IN ACCORDANCE WITH SECTION 099000 – PAINTING.

3.6 FIELD QUALITY CONTROL

A. HYDROSTATIC TESTING SHALL BE CONDUCTED IN ACCORDANCE WITH ASME B31.3. PIPING SYSTEMS SHALL BE TESTED UNDER NORMAL SERVICE CONDITIONS (AS INDICATED IN THE PIPE SCHEDULE IN THE CONTRACT DRAWINGS) TO DEMONSTRATE COMPLIANCE. THE TEST PRESSURE SHALL NOT BE LESS THAN 1.5 TIMES THE DESIGN PRESSURE. WATER SHALL BE USED AS THE HYDROSTATIC TEST FLUID. PROVIDE CLEAN TEST WATER OF SUCH QUALITY TO PREVENT CORROSION OF THE PIPING SYSTEM MATERIALS. AIR RELEASE VENTS SHALL BE OPENED AT ALL HIGH POINTS OF THE PIPING SYSTEM IN ORDER TO PURGE AIR POCKETS WHILE THE PIPING SYSTEM IS FILLING.

B. FOR RIGID PIPING HYDROSTATIC TESTING, THE MAXIMUM TEST PRESSURE SHALL BE CALCULATED ACCORDING TO ASME B31.3, BUT SHALL NOT EXCEED THE YIELD STRENGTH OF THE PIPING SYSTEM. THE MAXIMUM VELOCITY DURING FILLING SHALL BE IN ACCORDANCE WITH THE MANUFACTURER'S INSTRUCTIONS. VENTING DURING FILLING MAY ALSO BE PROVIDED BY LOOSENING FLANGES WITH A MINIMUM OF FOUR BOLTS OR BY THE USE OF EQUIPMENT VENTS. TEST ALL PARTS OF THE PIPING SYSTEM. THE HYDROSTATIC TEST PRESSURE SHALL BE MAINTAINED CONTINUOUSLY FOR 30 MINUTES MINIMUM AND FOR SUCH ADDITIONAL TIME AS NECESSARY TO CONDUCT EXAMINATIONS FOR LEAKAGE. ALL JOINTS AND CONNECTIONS SHALL BE EXAMINED FOR LEAKAGE. THE PIPING SYSTEM, EXCLUSIVE OF POSSIBLE LOCALIZED INSTANCES AT PUMP OR VALVE PACKING, SHALL SHOW NO VISUAL EVIDENCE OF LEAKING. CORRECT VISIBLE LEAKAGE AND RETEST. UNLESS OTHERWISE DIRECTED BY THE CONTRACTING OFFICER, THE PIPING SYSTEM SHALL BE LEFT FULL OF WATER AFTER LEAKS ARE REPAIRED.

C. FOR NON-RIGID, NON-METALLIC PIPING HYDROSTATIC TESTING, THE MAXIMUM TEST PRESSURE SHALL BE CALCULATED ACCORDING TO ASME B31.3, BUT SHALL NOT EXCEED 1.5 TIMES THE MAXIMUM PRESSURE RATING OF THE LOWEST RATED COMPONENT IN THE PIPING SYSTEM. THE MAXIMUM VELOCITY DURING FILLING SHALL BE IN ACCORDANCE WITH THE MANUFACTURER'S INSTRUCTIONS. THE SYSTEM SHALL BE INITIALLY PRESSURIZED TO 50 PERCENT OF THE NORMAL SERVICE CONDITIONS AND INSPECTED. ANY LEAKS SHALL BE REPAIRED BY THE CONTRACTOR. THE SYSTEM SHALL THEN BE PRESSURIZED TO THE TEST PRESSURE. SMALL AMOUNTS OF WATER SHALL BE ADDED AS REQUIRED ON A HOURLY BASIS FOR A MAXIMUM OF 3 HOURS IN ORDER TO MAINTAIN THE TEST PRESSURE. AFTER 4 HOURS, THE TEST PRESSURE SHALL BE LOWERED BY 10.0 PSI. IF THE HYDROSTATIC PRESSURE REMAINS STEADY FOR 1 HOUR, THEN NO LEAKAGE IS INDICATED. INSPECT FOR LEAKS, REPAIR AND RETEST IF NECESSARY. THE PIPING SYSTEM SHALL BE ALLOWED TO RELAX FOR 8 HOURS BEFORE RETESTING.

D. TESTS FOR ABOVE GROUND PRESSURE PIPING SHALL BE CONDUCTED AFTER THE PIPING HAS BEEN COMPLETELY INSTALLED, INCLUDING ALL SUPPORTS, HANGERS, AND ANCHORS, AND INSPECTED FOR PROPER INSTALLATION BUT PRIOR TO INSTALLATION OF INSULATION.

E. VALVES MAY EITHER BE TESTED WHILE TESTING PIPELINES, OR AS A SEPARATE STEP. IT SHALL BE DEMONSTRATED THAT VALVES OPEN AND CLOSE SMOOTHLY WITH OPERATING PRESSURE ON ONE SIDE AND ATMOSPHERIC PRESSURE ON THE OTHER, AND IN BOTH DIRECTIONS FOR TWO-WAY VALVE APPLICATIONS. COUNT AND RECORD THE NUMBER OF TURNS REQUIRED TO OPEN AND CLOSE EACH VALVE, AND ACCOUNT FOR ANY DISCREPANCIES WITH MANUFACTURER'S DATA. AIR AND VACUUM RELIEF VALVES SHALL BE EXAMINED AS THE ASSOCIATED PIPE IS BEING FILLED TO VERIFY VENTING AND SEATING IS FULLY FUNCTIONAL. SET, VERIFY, AND RECORD SET PRESSURES FOR ALL RELIEF AND REGULATING VALVES. SELF-CONTAINED AUTOMATIC VALVES SHALL BE TESTED AT BOTH MAXIMUM AND MINIMUM OPERATING RANGES, AND RESET UPON COMPLETION OF TEST TO THE DESIGN VALUE. [AUTOMATIC VALVES THAT ARE NOT SELF-CONTAINED SHALL BE TESTED IN CONJUNCTION WITH CONTROL SYSTEM TESTING.]

3.7 INTERIM / FINAL CLEANING

A. PREVENT THE ACCUMULATION OF WELD ROD, WELD SPATTER, PIPE CUTTINGS AND FILINGS, GRAVEL, CLEANING RAGS, AND OTHER FOREIGN MATERIAL WITHIN PIPING SECTIONS DURING FABRICATION. THE PIPING SHALL BE EXAMINED TO ASSURE REMOVAL OF THESE AND OTHER FOREIGN OBJECTS PRIOR TO ASSEMBLY AND INSTALLATION.

PROCESS EQUIPMENT SCHEDULE - TREATMENT PLANT EXPANSION

IDENT.	EQUIPMENT TYPE	MANUFACTURER	DESCRIPTION	SUPPLIED BY	INSTALLED BY	REMARKS
F-212A	BAG FILTER	PENTAIR	PAINTED STEEL; 30" DIAMETER; 6 BAG FILTER HOUSING W/ DAVITED LID	FLITEWAY	CONTRACTOR	2, 3, 4
F-212B	BAG FILTER	PENTAIR	PAINTED STEEL; 30" DIAMETER; 6 BAG FILTER HOUSING W/ DAVITED LID	FLITEWAY	CONTRACTOR	2, 3, 4
P-212A	FEED PUMP	GOULD	ANSI CENTRIFUGAL PUMP; MODEL 3196; 2X3-6; 15 HP, 200 GPM; 100 FT HEAD	FLITEWAY	CONTRACTOR	2, 3, 4
P-212B	FEED PUMP	GOULD	ANSI CENTRIFUGAL PUMP; MODEL 3196; 2X3-6; 15 HP, 200 GPM; 100 FT HEAD	FLITEWAY	CONTRACTOR	2, 3, 4
F-218A	BAG FILTER	PENTAIR	PAINTED STEEL; 30" DIAMETER; 6 BAG FILTER HOUSING W/ DAVITED LID	FLITEWAY	CONTRACTOR	2, 3, 4
F-218B	BAG FILTER	PENTAIR	PAINTED STEEL; 30" DIAMETER; 6 BAG FILTER HOUSING W/ DAVITED LID	FLITEWAY	CONTRACTOR	2, 3, 4
P-218	DISCHARGE PUMP	GOULD	ANSI CENTRIFUGAL PUMP; MODEL 3196; 3X4-10H; 20 HP, 588.9 GPM; 89.6 FT HEAD	FLITEWAY	CONTRACTOR	2, 3, 4
TK-210	FEED TANK	BMT ACQUISITION, LLC	STEEL; 6,000 GAL CAP.; 10'-0" DIAMETER X 12'-0" HEIGHT	BMT	CONTRACTOR	1, 3, 4
TK-216	TREATED WATER TANK	BMT ACQUISITION, LLC	STEEL; 6,000 GAL CAP.; 10'-0" DIAMETER X 12'-0" HEIGHT	BMT	CONTRACTOR	1, 3, 4
V-214A	CARBON VESSEL	CALGON CARBON	STEEL; 20,000 LB CAP. CARBON VESSEL W/LEAD/LAG MANIFOLD	CALGON	CONTRACTOR	1, 3, 4
V-214B	CARBON VESSEL	CALGON CARBON	STEEL; 20,000 LB CAP. CARBON VESSEL W/LEAD/LAG MANIFOLD	CALGON	CONTRACTOR	1, 3, 4

REMARKS:

1. TANKS AND CARBON VESSELS WILL BE SHIPPED TO SITE AND CONTRACTOR SHALL ERECT AND INSTALL PER DRAWINGS. ALL SHIP-LOOSE ITEMS SHALL BE INSTALLED BY CONTRACTOR. ALL SPARE NOZZLES SHALL BE SEALED WITH GASKETS AND BOLTED BLIND FLANGES SUPPLIED BY AND INSTALLED BY CONTRACTOR.
2. PUMPS AND BAG FILTERS WILL BE SHIPPED ON INTEGRAL SKID. CONTRACTOR SHALL INSTALL SKIDS PER DRAWINGS. ANY SHIP-LOOSE ITEMS SHALL BE INSTALLED BY CONTRACTOR.
3. PROCESS EQUIPMENT SHALL BE INSTALLED PER MANUFACTURER'S RECOMMENDATION AND/OR AS SHOWN ON CB&I DRAWINGS
4. LIFTING AND RIGGING OF PROCESS EQUIPMENT SHALL BE IN ACCORDANCE WITH SPECIFIED PROCEDURES.

REVISIONS

NO.	DATE	BY	DESCRIPTION
1	3/31/17	LAW	RECORD DRAWINGS

DESIGN INFORMATION
DESIGNED BY: HLB
DRAWN BY: LLR
CHECKED BY: JMR
PROJECT MANAGER: DEJ

SEAL

THIS ASBUILT (RECORD DRAWING) HAS BEEN PREPARED, IN PART, BASED UPON INFORMATION FURNISHED BY OTHERS. WHILE THIS INFORMATION IS BELIEVED TO BE RELIABLE, EA ASSUMES NO RESPONSIBILITY FOR THE ACCURACY OF THIS RECORD DRAWING OR FOR ANY ERRORS OR OMISSIONS THAT MAY HAVE BEEN INCORPORATED INTO IT AS A RESULT OF INCORRECT INFORMATION PROVIDED TO EA. THOSE RELYING ON THIS RECORD DOCUMENT ARE ADVISED TO OBTAIN INDEPENDENT VERIFICATION OF ITS ACCURACY.

BULK FUELS FACILITY
GROUNDWATER TREATMENT SYSTEM EXPANSION
BERNALILLO COUNTY, NEW MEXICO

EQUIPMENT NOTES AND SCHEDULES

EA Engineering, Science, and Technology, Inc., PBC.
221 Sun Valley Boulevard; Suite D
Lincoln, NE 68528
(402) 476-3766

DATE:SEPTEMBER 2016

PROJECT NUMBER: 62599DM01

P-001

SHEET: 2 OF 11

FILE PATH: F:\FEDERAL\DOD\AFCEC\PROJECTS\62599DM01 – KIRTLAND BFF\CADD\RECORD DRAWINGS\62599DM01-P-001 NOTES.DWG [LAYOUT] 3/21/17 lwilke

NOTES:

1. EXISTING EQUIPMENT IS SHOWN HATCHED:
2. EXISTING PIPING IS SHOWN DASHED:
3. ALL EQUIPMENT SHALL BE INSTALLED AND ANCHORED PER CB&I PHASE IV MID-PLUME PUMP AND TREAT SYSTEM STRUCTURAL DRAWINGS AND MANUFACTURER'S RECOMMENDATIONS.
4. PUMP SKIDS AND THE CARBON COLUMN VALVE SKIDS SHALL BE INSTALLED LEVEL AND PLUMB. SKIDS SHALL ALSO BE ANCHORED AND GROUTED PER MANUFACTURER'S RECOMMENDATIONS.
5. SEE CB&I PHASE IV MID-PLUME PUMP AND TREAT SYSTEM DRAWINGS AND SPECIFICATIONS FOR PROCESS FLOW AND ELECTRICAL DETAILS, AND INSTRUMENTATION SPECIFICATIONS.
6. 1 INCH DRAIN PIPE INSTALLED FROM ALL COMBINATION AIR RELEASE VALVES TO SUMP, NOT SHOWN.

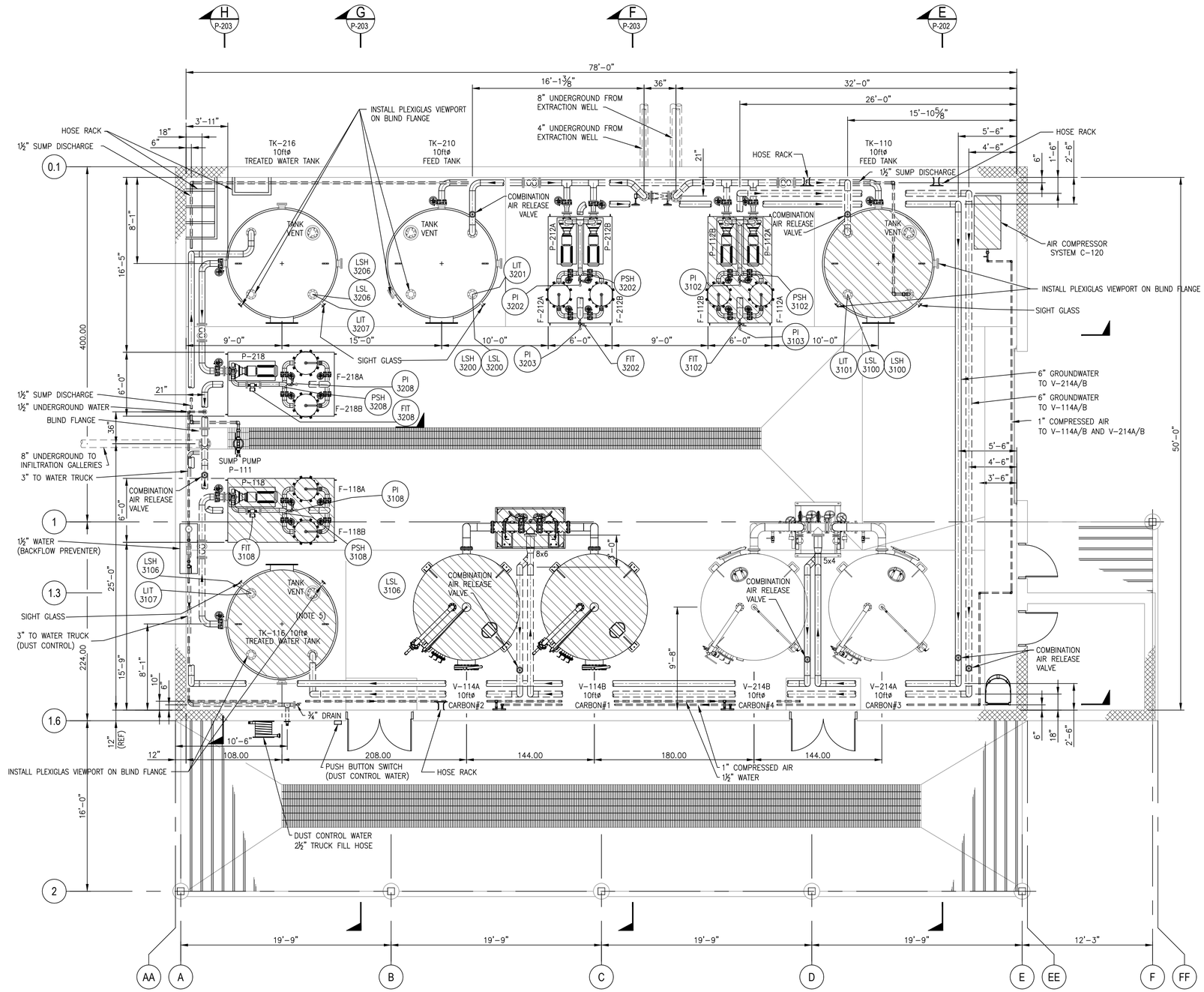

MECHANICAL EQUIPMENT PLAN

SCALE: 3/16" = 1'-0"

REVISIONS			
NO.	DATE	BY	DESCRIPTION
1	3/31/17	LAW	RECORD DRAWINGS

DESIGN INFORMATION
DESIGNED BY: HLB
DRAWN BY: LLR
CHECKED BY: JMR
PROJECT MANAGER: DEJ

SEAL

THIS ASBUILT (RECORD DRAWING) HAS BEEN PREPARED, IN PART, BASED UPON INFORMATION FURNISHED TO EA BY OTHERS. WHILE THIS INFORMATION IS BELIEVED TO BE RELIABLE, EA ASSUMES NO RESPONSIBILITY FOR THE ACCURACY OF THIS RECORD DRAWING OR FOR ANY ERRORS OR OMISSIONS THAT MAY HAVE BEEN INCORPORATED INTO IT IS A RESULT OF INCORRECT INFORMATION PROVIDED TO EA. THOSE RELYING ON THIS RECORD DRAWING AGREE TO HOLD EA HARMLESS FROM ANY VERIFICATION OF ITS ACCURACY.

BULK FUELS FACILITY
GROUNDWATER TREATMENT SYSTEM EXPANSION
BERNALILLO COUNTY, NEW MEXICO

EQUIPMENT PLAN

EA Engineering, Science, and Technology, Inc., PBC.
221 Sun Valley Boulevard; Suite D
Lincoln, NE 68528
(402) 476-3766

DATE:SEPTEMBER 2016

PROJECT NUMBER: 62599DM01

P-101

SHEET: 3 OF 11

1 0 2 4 6 8 10 12ft
ORIGINAL SCALE 3/16"=1'-0"

FILE PATH: F:\FEDERAL\OOD\AFCEC\PROJECTS\62599DM01 - KIRTLAND BFT\CADD\RECORD DRAWINGS\62599DM01-P-101 EQUIPMENT PLAN.DWG [LAYOUT] 3/17/17 lwilke

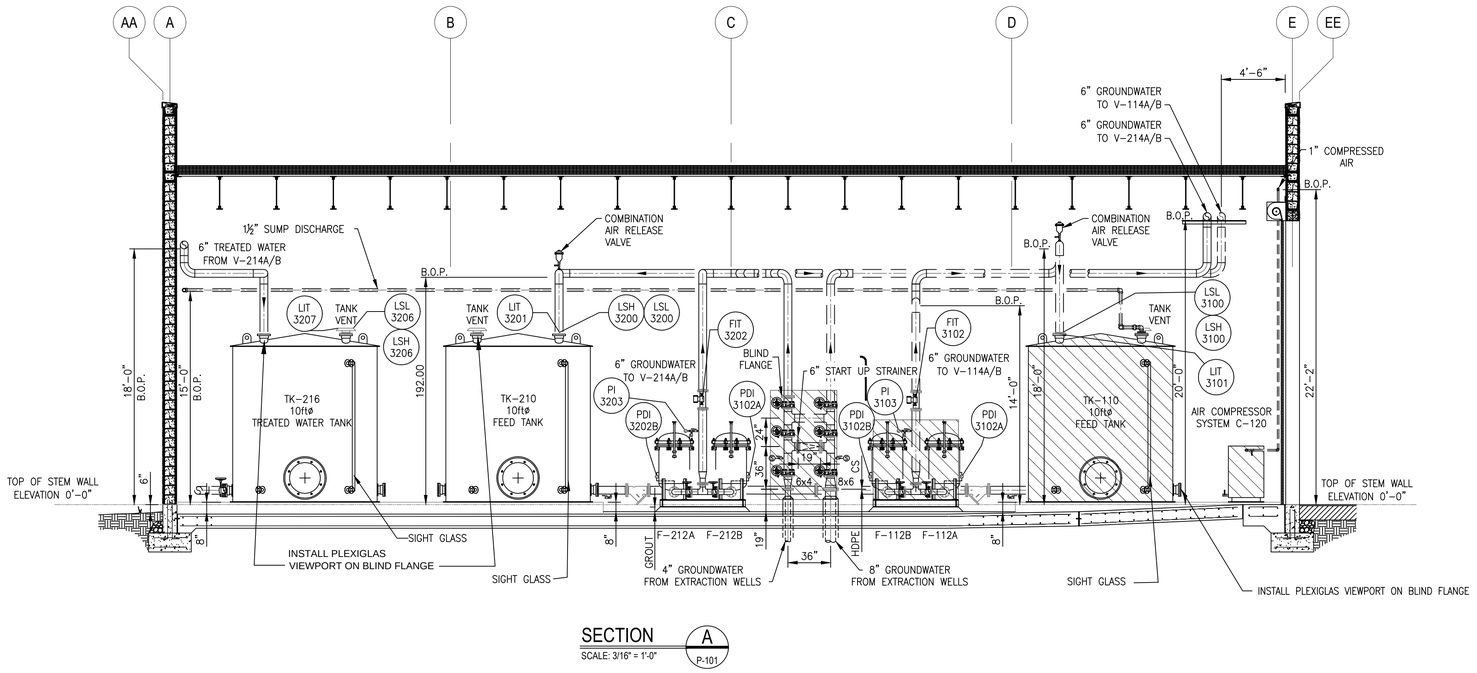

SECTION A (P-101)
SCALE: 3/16" = 1'-0"

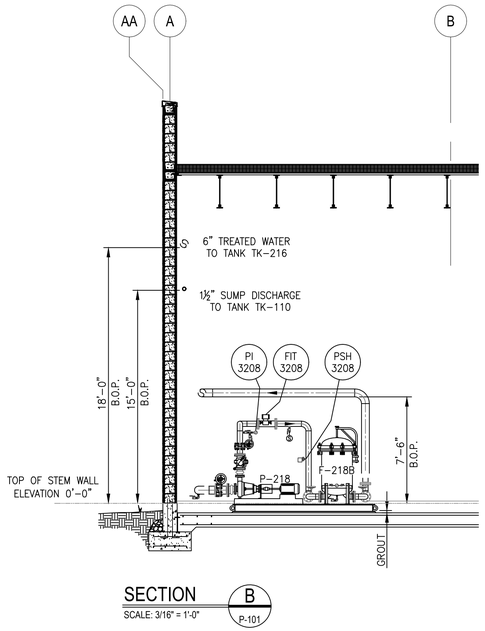

SECTION B (P-101)
SCALE: 3/16" = 1'-0"

NOTES:

1. EXISTING EQUIPMENT IS SHOWN HATCHED:
2. EXISTING PIPING IS SHOWN DASHED:
3. SEE CB&I PHASE IV MID-PLUME PUMP AND TREAT SYSTEM DRAWINGS AND SPECIFICATIONS FOR PROCESS FLOW AND ELECTRICAL DETAILS, AND INSTRUMENTATION SPECIFICATIONS.
4. CUT AND REMOVE PIPE FROM MANIFOLD AND REPLACE WITH FLANGES AND BUTTERFLY VALVE AS SHOWN.
5. 1 INCH DRAIN PIPE INSTALLED FROM ALL COMBINATION AIR RELEASE VALVES TO SUMP, NOT SHOWN.

1 0 1 2 3 4 5 6ft
ORIGINAL SCALE 3/8"=1'-0"

1 0 2 4 6 8 10 12ft
ORIGINAL SCALE 3/16"=1'-0"

REVISIONS

NO.	DATE	BY	DESCRIPTION
1	3/31/17	LAW	RECORD DRAWINGS

DESIGN INFORMATION
DESIGNED BY: HLB
DRAWN BY: LLR
CHECKED BY: JMR
PROJECT MANAGER: DEJ

SEAL

THIS ASBUILT (RECORD DRAWING) HAS BEEN PREPARED IN PART BASED UPON INFORMATION FURNISHED BY OTHERS. WHILE THIS INFORMATION IS BELIEVED TO BE RELIABLE, EA ASSUMES NO RESPONSIBILITY FOR THE ACCURACY OF THIS RECORD DRAWING OR FOR ANY ERRORS OR OMISSIONS THAT MAY HAVE BEEN INCORPORATED INTO IT AS A RESULT OF INCORRECT INFORMATION SUPPLIED BY OTHERS. ANYONE USING THIS RECORD DOCUMENT ARE ADVISED TO OBTAIN INDEPENDENT VERIFICATION OF ITS ACCURACY.

BULK FUELS FACILITY
GROUNDWATER TREATMENT SYSTEM EXPANSION
BERNALILLO COUNTY, NEW MEXICO

EQUIPMENT SECTIONS SHEET 1 OF 3

EA Engineering, Science, and Technology, Inc., PBC.
221 Sun Valley Boulevard; Suite D
Lincoln, NE 68528
(402) 476-3766

DATE:SEPTEMBER 2016
PROJECT NUMBER: 62599DM01

P-201
SHEET: 4 OF 11

FILE PATH: F:\FEDERAL\DOD\VAFCEC\PROJECTS\62599DM01 - KIRTLAND BFF\CADD\RECORD DRAWINGS\62599DM01--P-201 EQUIPMENT SECTIONS 1.DWG [LAYOUT] 3/17/17 hwilke

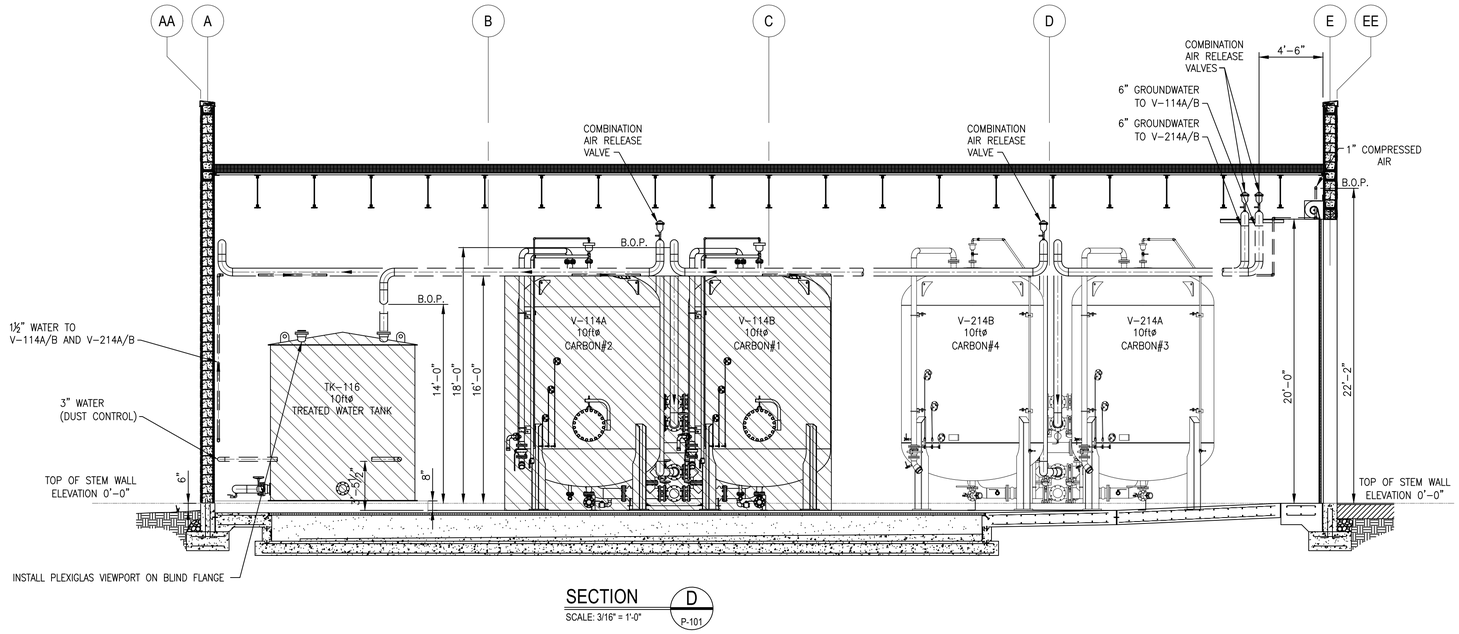

SECTION D
SCALE: 3/16" = 1'-0"
P-101

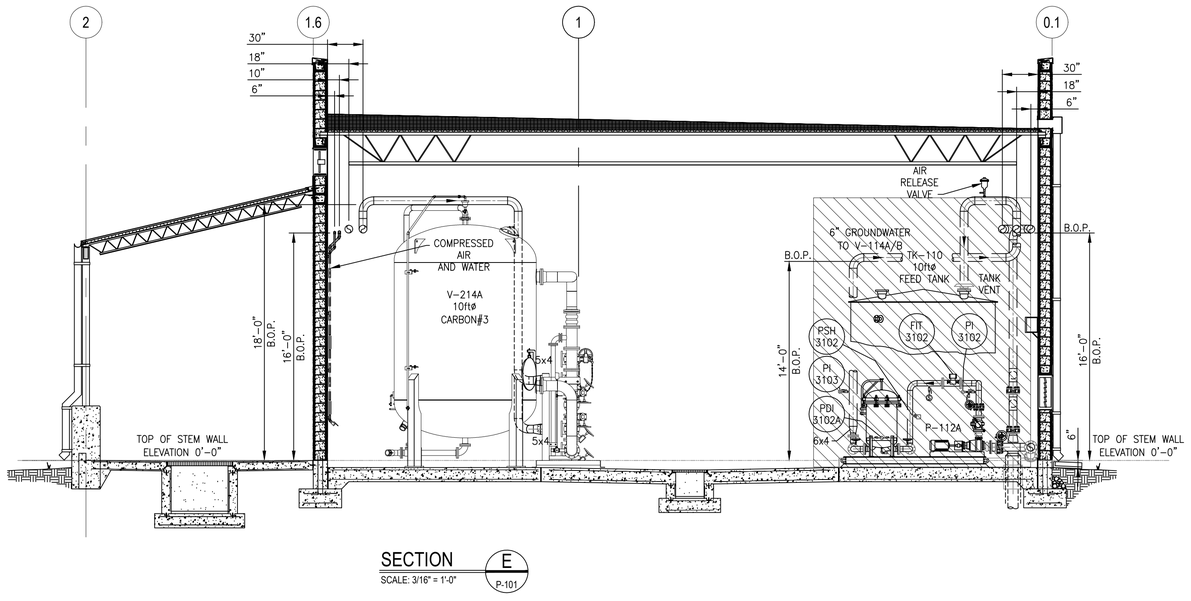

SECTION E
SCALE: 3/16" = 1'-0"
P-101

NOTES:

1. EXISTING EQUIPMENT IS SHOWN HATCHED:
2. EXISTING PIPING IS SHOWN DASHED:
3. SEE CB&I PHASE IV MID-PLUME PUMP AND TREAT SYSTEM DRAWINGS AND SPECIFICATIONS FOR PROCESS FLOW AND ELECTRICAL DETAILS, AND INSTRUMENTATION SPECIFICATIONS.
4. 1 INCH DRAIN PIPE INSTALLED FROM ALL COMBINATION AIR RELEASE VALVES TO SUMP, NOT SHOWN.

REVISIONS

NO.	DATE	BY	DESCRIPTION
1	3/31/17	LAW	RECORD DRAWINGS

DESIGN INFORMATION
DESIGNED BY: HLB
DRAWN BY: LLR
CHECKED BY: JMR
PROJECT MANAGER: DEJ

SEAL

THIS ASBUILT (RECORD DRAWING) HAS BEEN PREPARED, IN PART, BASED UPON INFORMATION FURNISHED BY OTHERS. WHILE THIS INFORMATION IS BELIEVED TO BE RELIABLE, EA ASSUMES NO RESPONSIBILITY FOR THE ACCURACY OF THIS RECORD DRAWING OR FOR ANY ERRORS OR OMISSIONS THAT MAY HAVE BEEN INCORPORATED INTO IT AS A RESULT OF INCORRECT INFORMATION PROVIDED TO EA. THOSE RELYING ON THIS RECORD DRAWING ARE ADVISED TO OBTAIN INDEPENDENT VERIFICATION OF ITS ACCURACY.

BULK FUELS FACILITY
GROUNDWATER TREATMENT SYSTEM EXPANSION
BERNALILLO COUNTY, NEW MEXICO

EQUIPMENT SECTIONS 2 OF 3

EA Engineering, Science, and Technology, Inc., PBC.
221 Sun Valley Boulevard; Suite D
Lincoln, NE 68528
(402) 476-3766

DATE:SEPTEMBER 2016
PROJECT NUMBER: 62599DM01

P-202
SHEET: 5 OF 11

1 0 2 4 6 8 10 12ft
ORIGINAL SCALE 3/16"=1'-0"

FILE PATH: F:\FEDERAL\DOD\AFCEC\PROJECTS\62599DM01 - KIRTLAND BFF\CADD\RECORD DRAWINGS\62599DM01-P-202 EQUIPMENT SECTIONS 2.DWG [LAYOUT] 3/17/17 lwike

NOTES:

1. EXISTING EQUIPMENT IS SHOWN HATCHED:
2. EXISTING PIPING IS SHOWN DASHED:
3. SEE CB&I PHASE IV MID-PLUME PUMP AND TREAT SYSTEM DRAWINGS AND SPECIFICATIONS FOR PROCESS FLOW AND ELECTRICAL DETAILS, AND INSTRUMENTATION SPECIFICATIONS.
4. 1 INCH DRAIN PIPE INSTALLED FROM ALL COMBINATION AIR RELEASE VALVES TO SUMP, NOT SHOWN.

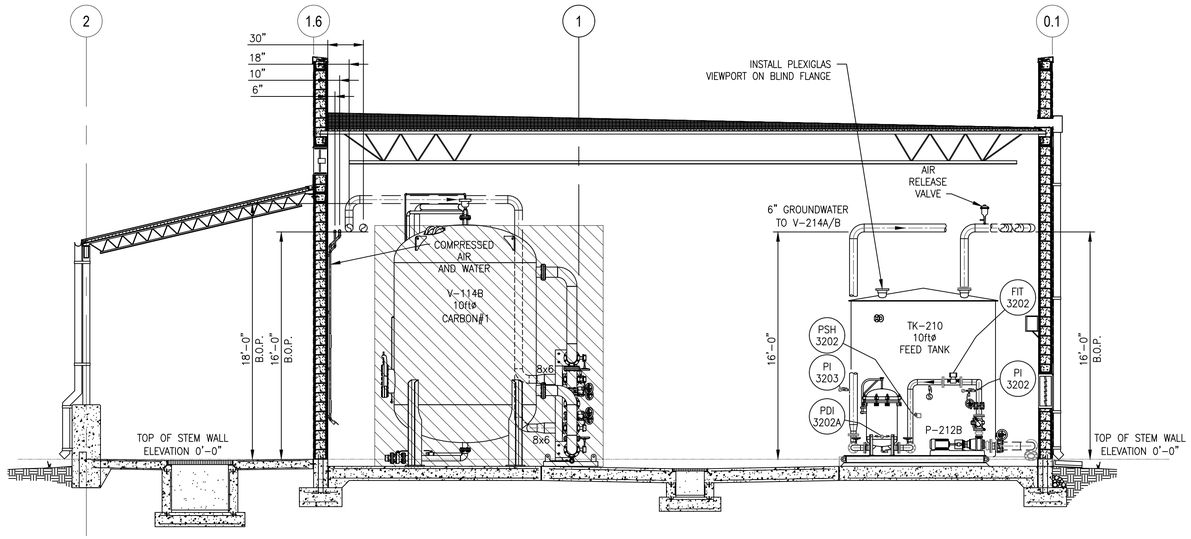

SECTION F
SCALE: 3/16" = 1'-0"
P-101

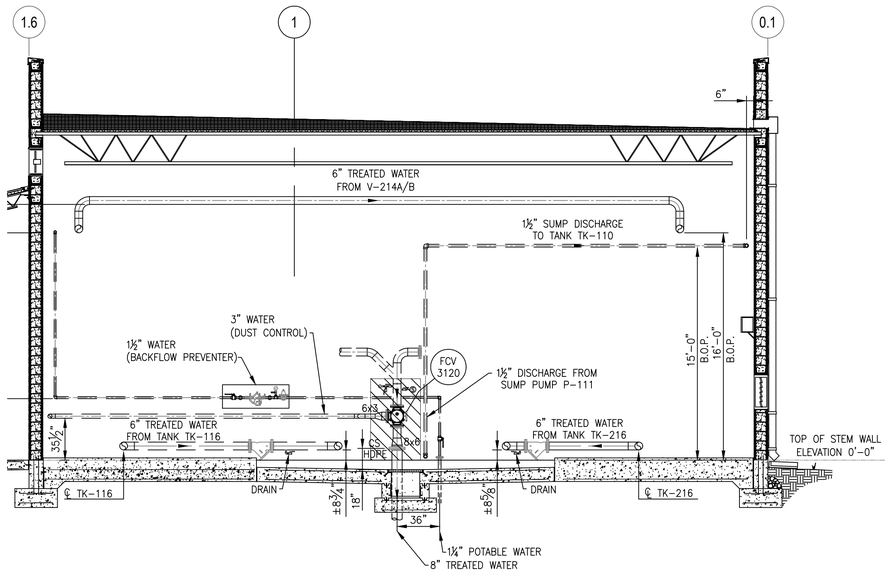

SECTION H
SCALE: 3/16" = 1'-0"
P-101

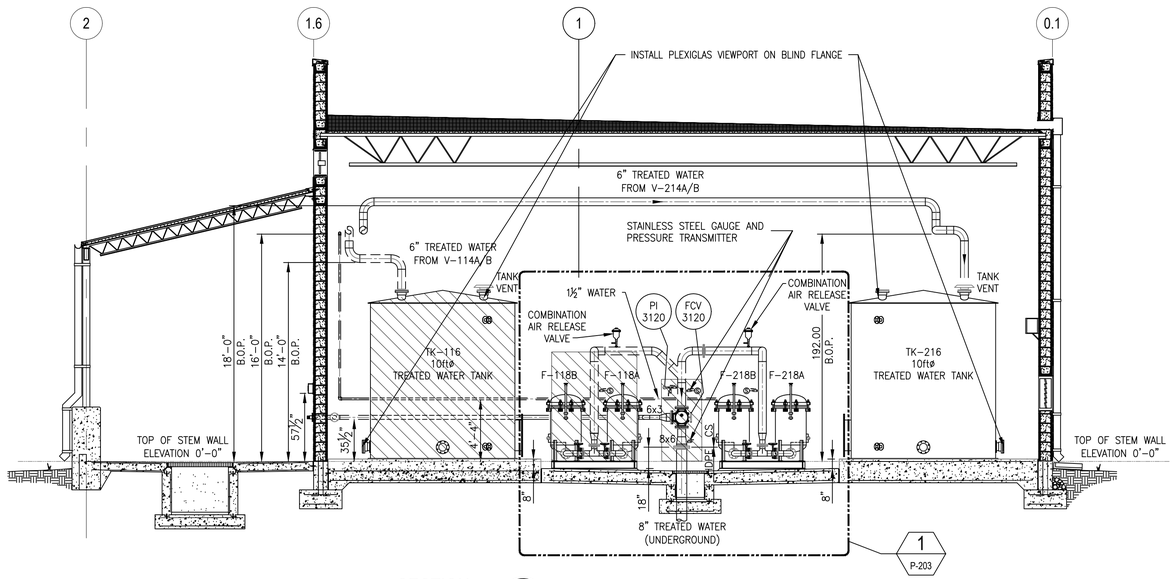

SECTION G
SCALE: 3/16" = 1'-0"
P-101

1
P-203

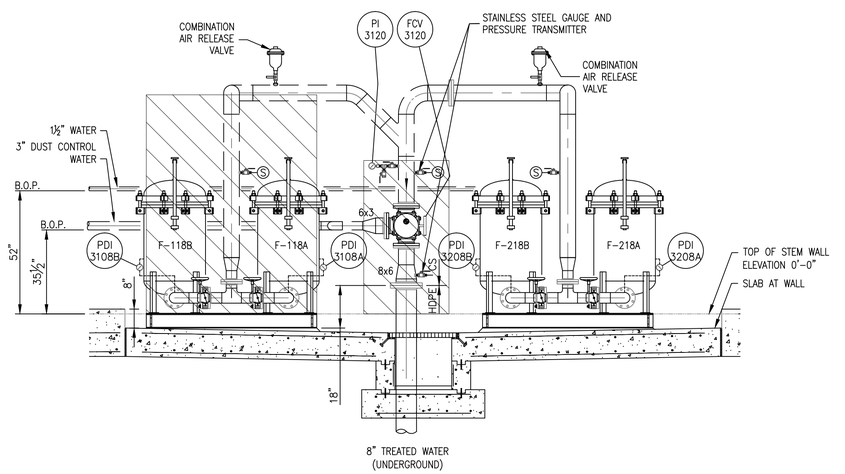

DETAIL 1
SCALE: 3/8" = 1'-0"
P-203

1 0 1 2 3 4 5 6ft
ORIGINAL SCALE 3/8"=1'-0"

1 0 2 4 6 8 10 12ft
ORIGINAL SCALE 3/16"=1'-0"

REVISIONS

NO.	DATE	BY	DESCRIPTION
1	3/31/17	LAW	RECORD DRAWINGS

DESIGN INFORMATION
DESIGNED BY: HLB
DRAWN BY: LLR
CHECKED BY: JMR
PROJECT MANAGER: DEJ

SEAL

THIS ASBUILT (RECORD DRAWING) HAS BEEN PREPARED BASED IN PART ON INFORMATION FURNISHED BY OTHERS. WHILE THIS INFORMATION IS BELIEVED TO BE RELIABLE, EA ASSUMES NO RESPONSIBILITY FOR THE ACCURACY OR COMPLETENESS OF THIS RECORD DRAWING OR FOR ANY ERRORS OR OMISSIONS THAT MAY HAVE BEEN INCORPORATED INTO IT AS A RESULT OF INCORRECT INFORMATION FURNISHED BY OTHERS. THE RECIPIENT OF THIS RECORD DOCUMENT ARE ADVISED TO OBTAIN INDEPENDENT VERIFICATION OF ITS ACCURACY.

BULK FUELS FACILITY
GROUNDWATER TREATMENT SYSTEM EXPANSION
BERNALILLO COUNTY, NEW MEXICO

EQUIPMENT SECTIONS SHEET 3 OF 3

EA Engineering, Science, and Technology, Inc., PBC.
221 Sun Valley Boulevard; Suite D
Lincoln, NE 68528
(402) 476-3766

DATE:SEPTEMBER 2016
PROJECT NUMBER: 62599DM01

P-203
SHEET: 6 OF 11

FILE PATH: F:\FEDERAL\000\AFCEC\PROJECTS\62599DM01 - KIRTLAND BFF\CADD\RECORD DRAWINGS\62599DM01-P-203 EQUIPMENT SECTIONS 3.DWG [LAYOUT] 3/17/17 lwilke

NOTES:

1. EXISTING EQUIPMENT IS SHOWN HATCHED:
2. EXISTING PIPING IS SHOWN DASHED:
3. EXISTING PIPE SUPPORTS ARE SHOWN DASHED:
4. SEE CB&I PHASE IV MID-PLUME PUMP AND TREAT SYSTEM DRAWINGS FOR PIPE SUPPORT DETAILS.

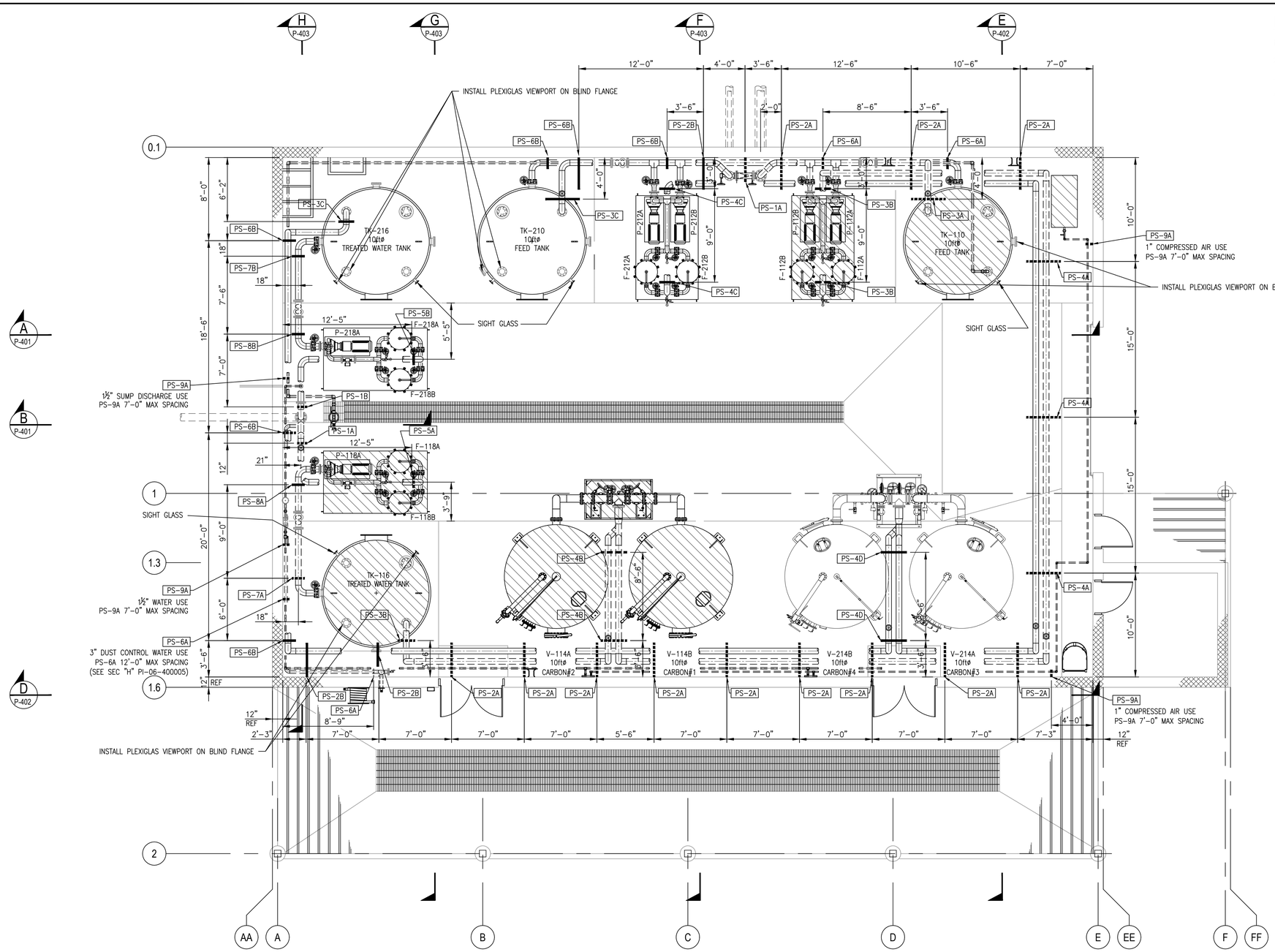

PIPE SUPPORT LOCATION PLAN

SCALE: 3/16" = 1'-0"

1 0 2 4 6 8 10 12ft

ORIGINAL SCALE 3/16"=1'-0"

REVISIONS

NO.	DATE	BY	DESCRIPTION
1	3/31/17	LAW	RECORD DRAWINGS

DESIGN INFORMATION
DESIGNED BY: HLB
DRAWN BY: LLR
CHECKED BY: JMR
PROJECT MANAGER: DEJ

SEAL

THIS ASBUILT (RECORD DRAWING) HAS BEEN PREPARED, IN PART, BASED UPON INFORMATION FURNISHED BY OTHERS. WHILE THIS INFORMATION IS BELIEVED TO BE RELIABLE, EA ASSUMES NO RESPONSIBILITY FOR THE ACCURACY OF THIS RECORD DRAWING OR FOR ANY ERRORS OR OMISSIONS THAT MAY HAVE BEEN INCORPORATED HEREIN AS A RESULT OF RELYING ON THIS INFORMATION. NOTE: IF AS-BUILT INFORMATION HAS BEEN PROVIDED TO EA, THOSE RELYING ON THIS RECORD DOCUMENT ARE ADVISED TO OBTAIN INDEPENDENT VERIFICATION OF ITS ACCURACY.

BULK FUELS FACILITY
GROUNDWATER TREATMENT SYSTEM EXPANSION
BERNALILLO COUNTY, NEW MEXICO

PIPING SUPPORT PLAN

EA Engineering, Science, and Technology, Inc., PBC.
221 Sun Valley Boulevard; Suite D
Lincoln, NE 68528
(402) 476-3766

DATE:SEPTEMBER 2016

PROJECT NUMBER: 62599DM01

P-301

SHEET: 7 OF 11

FILE PATH: F:\FEDERAL\DOD\AFCEC\PROJECTS\62599DM01 - KIRTLAND BFF\CADD\RECORD DRAWINGS\62599DM01-P-301 SUPPORTS PLAN.DWG [LAYOUT] 3/17/17 lwilke

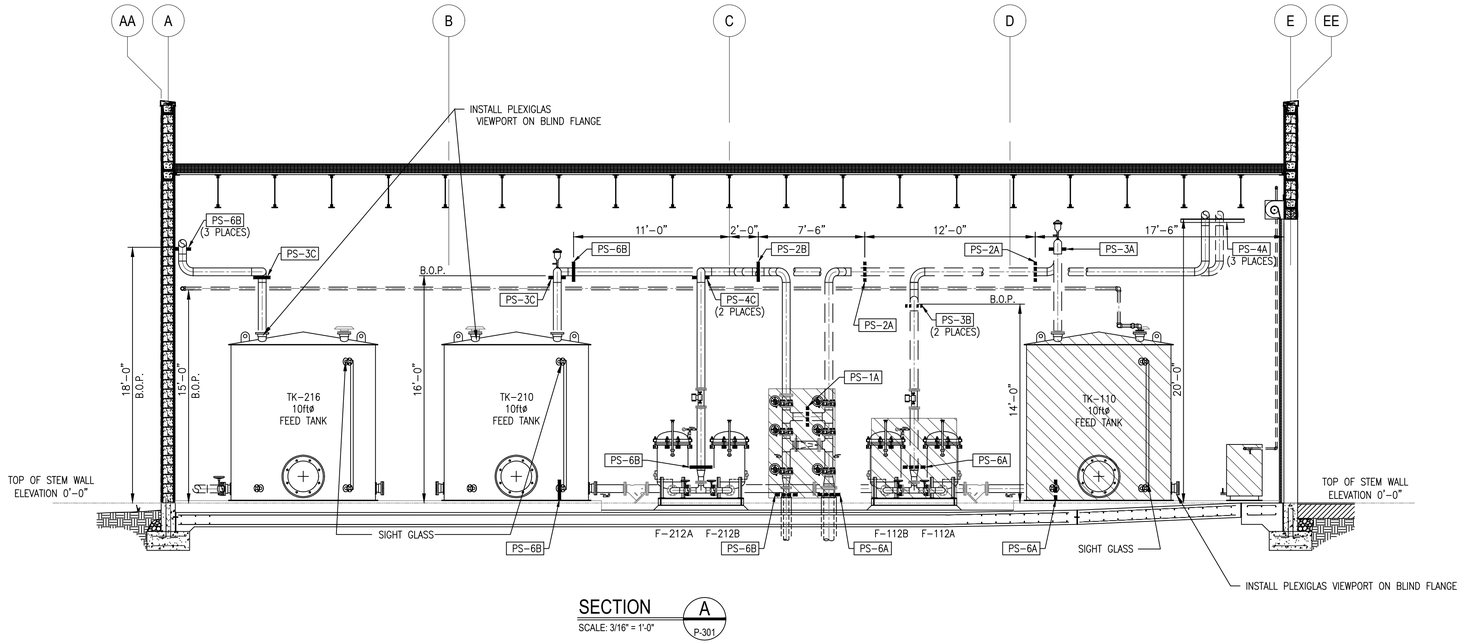

SECTION A
SCALE: 3/16" = 1'-0"
P-301

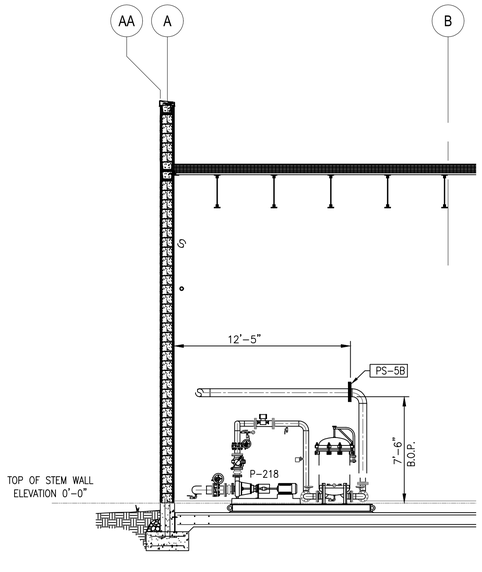

SECTION B
SCALE: 3/16" = 1'-0"
P-301

NOTES:

1. EXISTING EQUIPMENT IS SHOWN HATCHED:
2. EXISTING PIPING IS SHOWN DASHED:
3. EXISTING PIPE SUPPORTS ARE SHOWN DASHED:
4. SEE CB&I PHASE IV MID-PLUME PUMP AND TREAT SYSTEM DRAWINGS FOR PIPE SUPPORT DETAILS.

REVISIONS

NO.	DATE	BY	DESCRIPTION
1	3/31/17	LAW	RECORD DRAWINGS

DESIGN INFORMATION
DESIGNED BY: HLB
DRAWN BY: LLR
CHECKED BY: JMR
PROJECT MANAGER: DEJ

SEAL

THIS ASBUILT (RECORD DRAWING) HAS BEEN PREPARED IN PART BASED UPON INFORMATION FURNISHED BY OTHERS. WHILE THIS INFORMATION IS BELIEVED TO BE RELIABLE, EA ASSUMES NO RESPONSIBILITY FOR THE ACCURACY OF THIS RECORD DRAWING OR FOR ANY ERRORS OR OMISSIONS THAT MAY HAVE BEEN INCORPORATED INTO IT AS A RESULT OF INCORRECT INFORMATION PROVIDED TO EA. THOSE RELYING ON THIS RECORD DOCUMENT ARE ADVISED TO OBTAIN INDEPENDENT VERIFICATION OF ITS ACCURACY.

BULK FUELS FACILITY
GROUNDWATER TREATMENT SYSTEM EXPANSION
BERNALILLO COUNTY, NEW MEXICO

PIPING SUPPORT SECTIONS SHEET 1 OF 3

EA Engineering, Science, and Technology, Inc., PBC.
221 Sun Valley Boulevard; Suite D
Lincoln, NE 68528
(402) 476-3766

DATE:SEPTEMBER 2016
PROJECT NUMBER: 62599DM01

P-401
SHEET: 8 OF 11

1 0 2 4 6 8 10 12ft
ORIGINAL SCALE 3/16"=1'-0"

FILE PATH: F:\FEDERAL\DOD\AFCEC\PROJECTS\62599DM01 - KIRTLAND BFF\CADD\RECORD DRAWINGS\62599DM01-P-401 SUPPORTS SECTIONS 1.DWG [LAYOUT] 3/17/17 lwilke

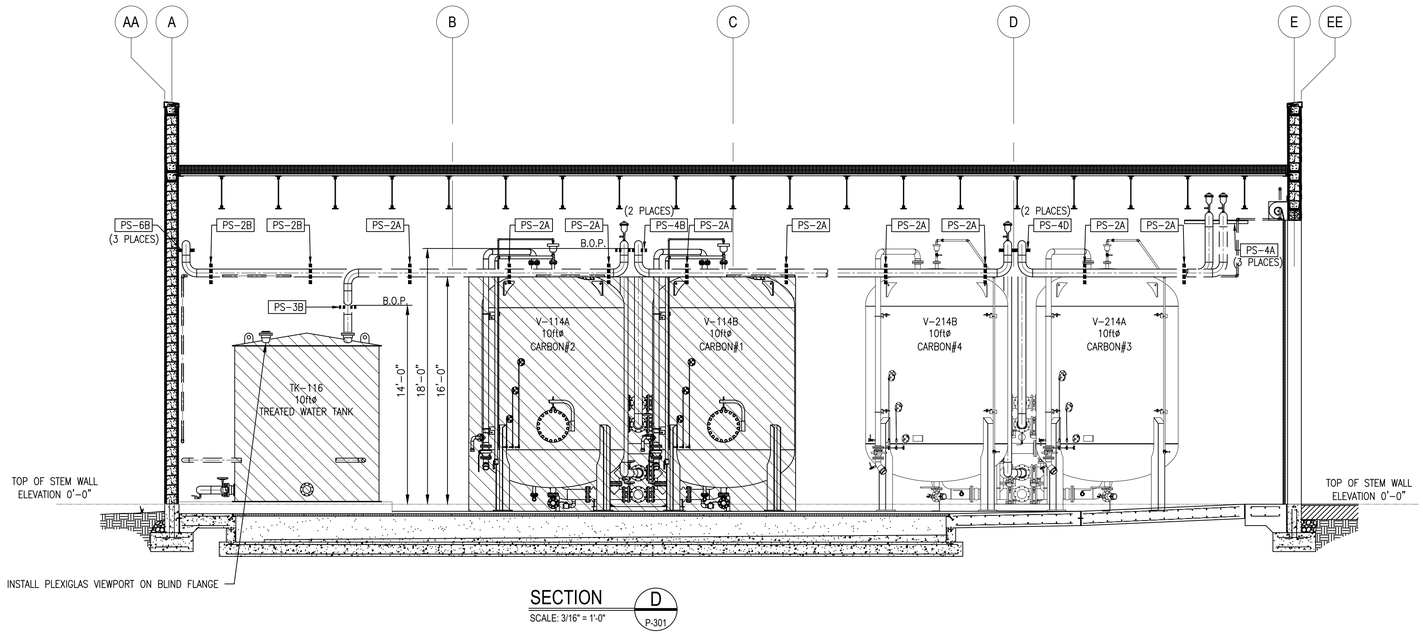

SECTION D
SCALE: 3/16" = 1'-0"
P-301

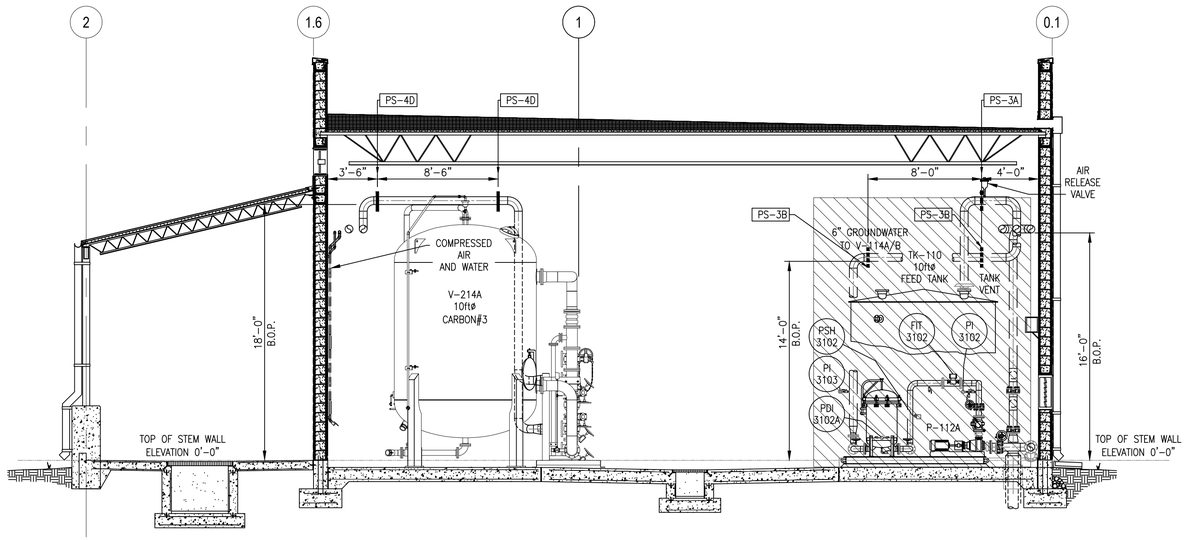

SECTION E
SCALE: 3/16" = 1'-0"
P-301

NOTES:

1. EXISTING EQUIPMENT IS SHOWN HATCHED:
2. EXISTING PIPING IS SHOWN DASHED:
3. EXISTING PIPE SUPPORTS ARE SHOWN DASHED:
4. SEE CB&I PHASE IV MID-PLUME PUMP AND TREAT SYSTEM DRAWINGS FOR PIPE SUPPORT DETAILS.

REVISIONS

NO.	DATE	BY	DESCRIPTION
1	3/31/17	LAW	RECORD DRAWINGS

DESIGN INFORMATION
DESIGNED BY: HLB
DRAWN BY: LLR
CHECKED BY: JMR
PROJECT MANAGER: DEJ

SEAL

THIS ASBUILT (RECORD DRAWING) HAS BEEN PREPARED IN PART BASED ON INFORMATION FURNISHED BY OTHERS. WHILE THIS INFORMATION IS BELIEVED TO BE RELIABLE, EA ASSUMES NO RESPONSIBILITY FOR THE ACCURACY OF THIS RECORD DRAWING OR FOR ANY ERRORS OR OMISSIONS THAT MAY HAVE BEEN INCORPORATED INTO IT AS A RESULT OF INCORRECT INFORMATION PROVIDED BY OTHERS. THOSE REFERRING TO THIS RECORD DOCUMENT ARE ADVISED TO OBTAIN INDEPENDENT VERIFICATION OF ITS ACCURACY.

BULK FUELS FACILITY
GROUNDWATER TREATMENT SYSTEM EXPANSION
BERNALILLO COUNTY, NEW MEXICO

PIPING SUPPORT SECTIONS SHEET 2 OF 3

EA Engineering, Science, and Technology, Inc., PBC.
221 Sun Valley Boulevard; Suite D
Lincoln, NE 68528
(402) 476-3766

DATE:SEPTEMBER 2016
PROJECT NUMBER: 62599DM01

P-402
SHEET: 9 OF 11

1 0 2 4 6 8 10 12ft
ORIGINAL SCALE 3/16"=1'-0"

FILE PATH: F:\FEDERAL\000\AFCEC\PROJECTS\62599DM01 - KIRTLAND BFF\CADD\RECORD DRAWINGS\62599DM01-P-402 SUPPORTS SECTIONS 2.DWG [LAYOUT] 3/17/17 lwilke

NOTES:

1. EXISTING EQUIPMENT IS SHOWN HATCHED:
2. EXISTING PIPING IS SHOWN DASHED:
3. EXISTING PIPE SUPPORTS ARE SHOWN DASHED:
4. SEE CB&I PHASE IV MID-PLUME PUMP AND TREAT SYSTEM DRAWINGS FOR PIPE SUPPORT DETAILS.

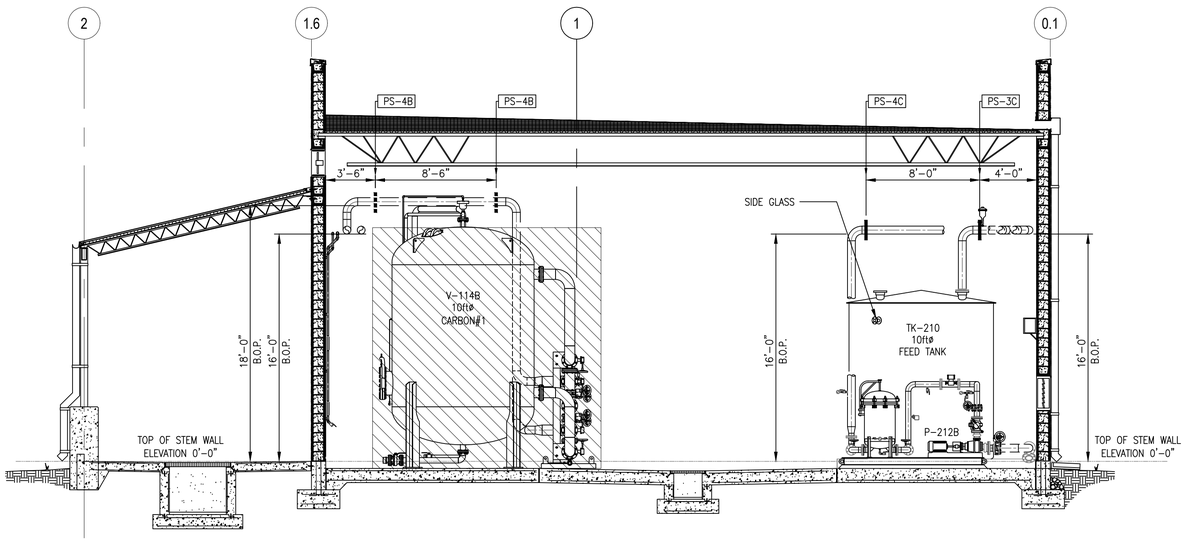

SECTION F
SCALE: 3/16" = 1'-0"
P-301

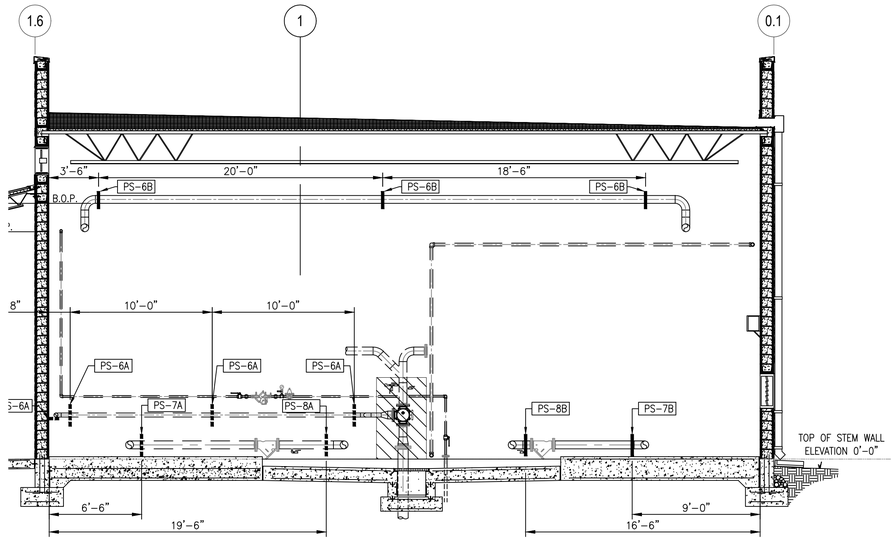

SECTION H
SCALE: 3/16" = 1'-0"
P-301

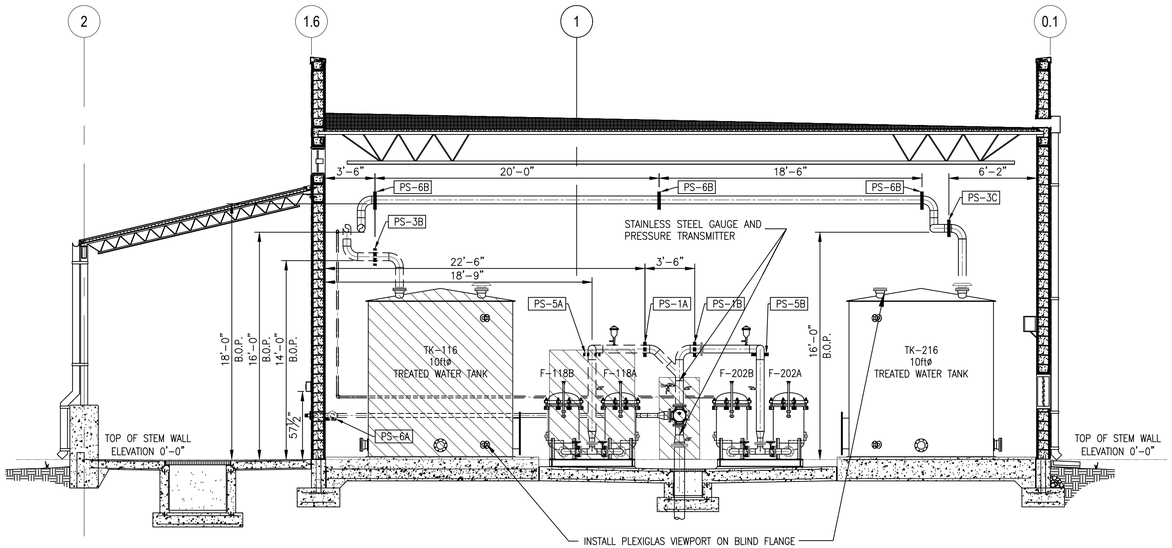

SECTION G
SCALE: 3/16" = 1'-0"
P-301

1 0 2 4 6 8 10 12ft
ORIGINAL SCALE 3/16"=1'-0"

REVISIONS

NO.	DATE	BY	DESCRIPTION
1	3/31/17	LAW	RECORD DRAWINGS

DESIGN INFORMATION
DESIGNED BY: HLB
DRAWN BY: LLR
CHECKED BY: JMR
PROJECT MANAGER: DEJ

SEAL

THIS ASBUILT (RECORD DRAWING) HAS BEEN PREPARED IN PART BASED UPON INFORMATION FURNISHED BY OTHERS. WHILE THIS INFORMATION IS BELIEVED TO BE RELIABLE, EA ASSUMES NO RESPONSIBILITY FOR THE ACCURACY OF THIS ASBUILT RECORD DRAWING OR FOR ANY ERRORS OR OMISSIONS THAT MAY HAVE BEEN INCORPORATED HEREIN AS A RESULT OF INACCURATE INFORMATION PROVIDED BY OTHERS. THE REVIEWER OF THIS RECORD DOCUMENT ARE ADVISED TO OBTAIN INDEPENDENT VERIFICATION OF ITS ACCURACY.

BULK FUELS FACILITY
GROUNDWATER TREATMENT SYSTEM EXPANSION
BERNALILLO COUNTY, NEW MEXICO

PIPING SUPPORT SECTIONS SHEET 3 OF 3

EA Engineering, Science, and Technology, Inc., PBC.
221 Sun Valley Boulevard; Suite D
Lincoln, NE 68528
(402) 476-3766

DATE:SEPTEMBER 2016
PROJECT NUMBER: 62599DM01
P-403
SHEET: 10 OF 11

FILE PATH: F:\FEDERAL\DOD\AFCEC\PROJECTS\62599DM01 - KIRTLAND EBFT\CADD\RECORD DRAWINGS\62599DM01-P-403 SUPPORTS SECTIONS 3.DWG [LAYOUT] 3/17/17 hwike

LEGEND

- CONTROL PANEL CP-100 TERMINATION
- EXTERNAL WIRING
- INTERNAL WIRING
- EXISTING EQUIPMENT

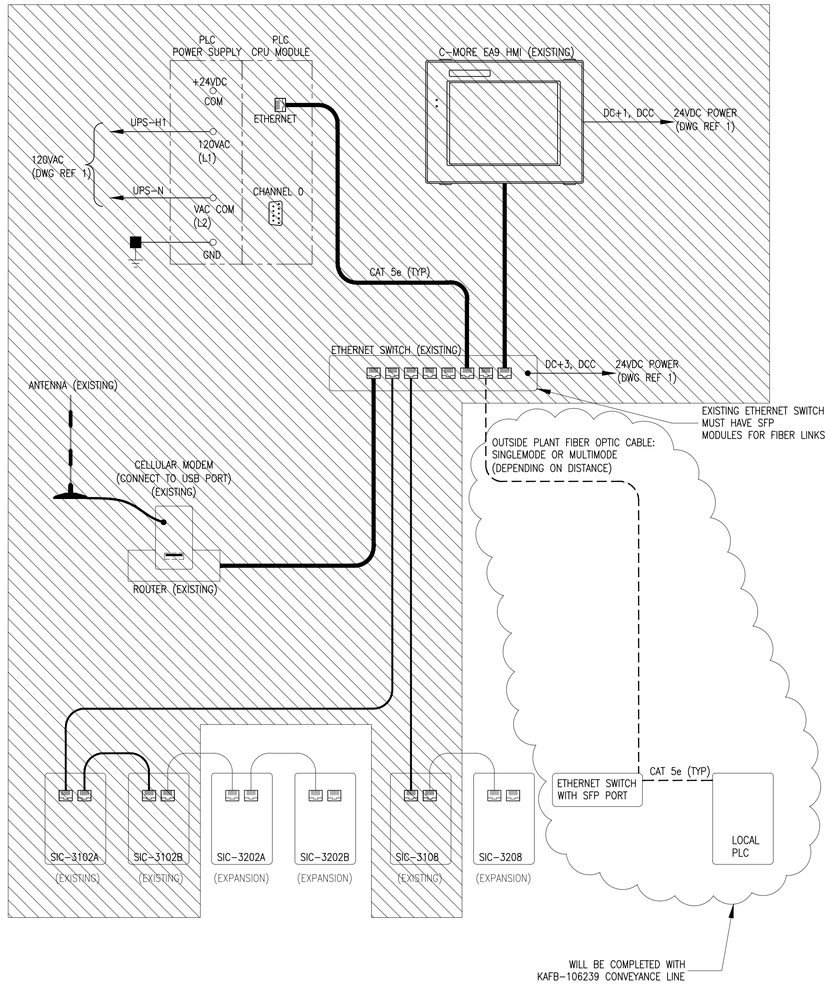

REVISIONS

NO.	DATE	BY	DESCRIPTION
1	3/31/17	LAW	RECORD DRAWINGS

DESIGN INFORMATION

DESIGNED BY: HLB
DRAWN BY: LLR
CHECKED BY: JMR
PROJECT MANAGER: DEJ

SEAL

THIS ASBUILT (RECORD DRAWING) HAS BEEN PREPARED, IN PART, BASED UPON INFORMATION FURNISHED BY OTHERS. WHILE THIS INFORMATION IS BELIEVED TO BE RELIABLE, EA ASSUMES NO RESPONSIBILITY FOR THE ACCURACY OF THIS RECORD DRAWING OR FOR ANY ERRORS OR OMISSIONS THAT MAY HAVE BEEN INCORPORATED INTO IT AS A RESULT OF INCORRECT INFORMATION PROVIDED TO EA. THOSE RELYING ON THIS RECORD DOCUMENT ARE ADVISED TO OBTAIN INDEPENDENT VERIFICATION OF ITS ACCURACY.

BULK FUELS FACILITY
GROUNDWATER TREATMENT SYSTEM EXPANSION
BERNALILLO COUNTY, NEW MEXICO

CP-100 CONTROL PANEL COMMUNICATION DIAGRAM

EA Engineering, Science, and Technology, Inc., PBC.
221 Sun Valley Boulevard; Suite D
Lincoln, NE 68528
(402) 476-3766

DATE:SEPTEMBER 2016

PROJECT NUMBER: 62599DM01

E-001

SHEET: 11 OF 11

FILE PATH: F:\FEDERAL\DOD\VFCEC\PROJECTS\62599DM01 - KIRTLAND BFT\CADD\RECORD DRAWINGS\62599DM01-E-001 CONTROL COMMUNICATION.DWG [03] 3/24/17 hwhite

APPENDIX D

Warranties

(Provided on compact disc)

APPENDIX D

Warranties

(Provided on compact disc)

Rupert Plumbing & Heating Co., Inc.

1401 Candelaria Rd. NE Albuquerque, New Mexico 87107
Phone (505) 247-8138 Fax (505) 764-9704

January 9, 2016

PROJECT WARRANTY

Project: KAFB Bulk Fuels Facility phase II

Rupert Plumbing and Heating Co Inc guarantees that this installation is free from mechanical defects. Rupert Plumbing agrees to repair any part of the installation which may fail within a period of one year after date of final acceptance or occupancy, whichever occurs first, provided that such failure is due to defects in materials or workmanship.

Rupert Plumbing and Heating Co Inc

Michael Rupert

January 31, 2017

Ed Butler
Techsas, Inc
4819 West Bayshore Drive
Bacliff, Texas 77518

Subject: KAFB – Bulk Fuels Facility Mid-Plume Pump & Treat System Expansion

Reference: Project Warranty

Mick Rich Contractors, Inc. warrants and guarantees all workmanship performed by us, and material supplied by us for a period of one year from the date of substantial completion of the contract.

Date of substantial completion: January 9, 2017.

Very truly yours,

Jim Rich
Vice-President

MICK RICH
CONTRACTORS
Solving complexity with creativity
MICK RICH CONTRACTORS, INC.
P.O. BOX 90727
ALBUQUERQUE, NM 87199
Tele. (505) 823-9782
E-Mail: contact@mickrichcontractors.com
Web Site: www.mickrichcontractors.com

Ultra Painting Inc.

State Labor and Industrial Reg. # 0046720050604

ultrapainting@aol.com

Bonding rate 3%

Phone: (505) 792-5153 Fax: (505) 792-7226

Date: 31 January 2017

To: Mick Rich Contractors

From: Andrew Sanchez

RE: Warranty

Please accept this as a warranty that Ultra Painting Inc. will guarantee out workmanship and material for a one year period after the final acceptance date.

Project: KAFB Bulk Fuel Facility Mid-Plume Pump & Treatment Facility

Final Acceptance Date: 9 January 2017
Expiration Date: 9 January 2018

Scope of work: Painting- Subcontractor
Address: P.O. Box 3835
Corrales, New Mexico 87048

Signed :
Andrew Sanchez

Date: 31 January 2017

TECHSAS Incorporated
Providing Technical Sales and Service
4819 West Bayshore Drive Bacliff, TX 77518

Tuesday, March 07, 2017

Devon E. Jercinovic, PG, PMP
EA Engineering, Science, and Technology, Inc., PBC
Program Manager I
320 Gold Ave. SW, Suite 1300
Albuquerque, NM 87102

Re: Kirtland BFF GWTS Expansion – Project Warranty

WARRANTY STATEMENT

Techsas, Inc. warrants and guarantees products of its manufacture against defective workmanship or material for a period of one year from the date of shipment from the factory.

This warranty is expressly and strictly limited to replacing, without charge, any part or parts which prove to Techsas's satisfaction upon examination, to have been defective and which have not been neglected, abused or misapplied, provided the buyer gives Techsas immediate written notice upon discovery of any claimed defect.

Techsas will also guarantee component parts manufactured by others to the extent of the guarantee made by the manufacturer of such equipment. In any case, guarantees on specific components will be extended a minimum of one year from date of shipment.

Warranty Exclusions:

Warranty coverage does not include:

(A) Freight, labor, travel, and living expenses associated with parts replacement;
(B) Normal maintenance items such as lubrication, fan belts, and cleaning of the equipment.

In the event the customer, or any installation contractor employed by the customer, contracts outside Techsas for installation work or erection of quoted equipment, the customer shall assume full responsibility for said contract.

Sincerely,

Edwin J. Butler

Edwin J. Butler - VP