ENTERED

DEPARTMENT OF THE AIR FORCE
377TH AIR BASE WING (AFGSC)

RECEIVED
MAY 15 2018
NMED
Hazardous Waste
Bureau

MAY 11 2018

Colonel Richard W. Gibbs, USAF
Commander
377th Air Base Wing
2000 Wyoming Blvd SE
Kirtland AFB NM 87117

ENTERED

Mr. John Kieling, Bureau Chief
Hazardous Waste Bureau (HWB)
New Mexico Environment Department (NMED)
2905 Rodeo Park Drive East, Building 1
Santa Fe NM 87505-6303

Dear Mr. Kieling

Attached please find the *Construction Completion Report for Extraction Well Equipment at KAFB-106239 and Conveyance line*, Solid Waste Management Unit ST-106/SS-111 associated with the Bulk Fuels Facility Spill interim measure at Solid Waste Management Unit ST-106/SS-111, Kirtland Air Force Base, New Mexico. This report has been prepared to summarize expansion activities at the Groundwater Treatment System associated with connection of extraction well KAFB-106239 to the Groundwater Treatment System.

If you have any questions or concerns, please contact Mr. Scott Clark at (505) 846-9017 or at scott.clark@us.af.mil;or Mrs. Holly O'Grady at (505) 853-3484 or at holly.ogrady@us.af.mil.

Sincerely

RICHARD W. GIBBS, Colonel, USAF
Commander

Attachment:
Construction Completion Report, 2 Hard Copies/2 CDs

cc:
NMED (Borrego) letter
NMED-OOTS (McQuillan), letter and CD
NMED GWQB (Hunter), letter and CD
EPA Region 6 (King, Ellinger), letter and CD
COA (Faris), letter and CD
ABCWUA (Shean), letter and CD
SAF-IEE (Lynnes), electronic only
AFCEC/CZ (Renaghan, Clark, O'Grady, Segura), electronic only
USACE-ABQ District Office (Simpler, Phaneuf, Dreeland, Sanchez, Salazar), electronic only
Public Info Repository, Administrative Record/Information Repository (AR/IR) and File

KAFB4668

DEPARTMENT OF THE AIR FORCE
377TH AIR BASE WING (AFGSC)

MAY 11 2018

Colonel Richard W. Gibbs, USAF
Commander
377th Air Base Wing
2000 Wyoming Blvd SE
Kirtland AFB NM 87117

Mr. John Kieling, Bureau Chief
Hazardous Waste Bureau (HWB)
New Mexico Environment Department (NMED)
2905 Rodeo Park Drive East, Building 1
Santa Fe NM 87505-6303

Dear Mr. Kieling

Attached please find the *Construction Completion Report for Extraction Well Equipment at KAFB-106239 and Conveyance line*, Solid Waste Management Unit ST-106/SS-111 associated with the Bulk Fuels Facility Spill interim measure at Solid Waste Management Unit ST-106/SS-111, Kirtland Air Force Base, New Mexico. This report has been prepared to summarize expansion activities at the Groundwater Treatment System associated with connection of extraction well KAFB-106239 to the Groundwater Treatment System.

If you have any questions or concerns, please contact Mr. Scott Clark at (505) 846-9017 or at scott.clark@us.af.mil;or Mrs. Holly O'Grady at (505) 853-3484 or at holly.ogrady@us.af.mil.

Sincerely

RICHARD W. GIBBS, Colonel, USAF
Commander

Attachment:
Construction Completion Report, 2 Hard Copies/2 CDs

cc:
NMED (Borrego) letter
NMED-OOTS (McQuillan), letter and CD
NMED GWQB (Hunter), letter and CD
EPA Region 6 (King, Ellinger), letter and CD
COA (Faris), letter and CD
ABCWUA (Shean), letter and CD
SAF-IEE (Lynnes), electronic only
AFCEC/CZ (Renaghan, Clark, O'Grady, Segura), electronic only
USACE-ABQ District Office (Simpler, Phaneuf, Dreeland, Sanchez, Salazar), electronic only
Public Info Repository, Administrative Record/Information Repository (AR/IR) and File

KIRTLAND AIR FORCE BASE
ALBUQUERQUE, NEW MEXICO

CONSTRUCTION COMPLETION REPORT FOR EXTRACTION WELL EQUIPMENT AT KAFB-106239 AND CONVEYANCE LINE SOLID WASTE MANAGEMENT UNIT ST-106/SS-111

May 2018

377 MSG/CEI
2050 Wyoming Boulevard Southeast
Kirtland Air Force Base, New Mexico 87117-5270

KIRTLAND AIR FORCE BASE
ALBUQUERQUE, NEW MEXICO

CONSTRUCTION COMPLETION REPORT FOR EXTRACTION WELL EQUIPMENT AT KAFB-106239 AND CONVEYANCE LINE SOLID WASTE MANAGEMENT UNIT ST-106/SS-111

May 2018

Prepared for
U.S. Army Corps of Engineers
Albuquerque District
4101 Jefferson Plaza NE
Albuquerque, New Mexico 87109-3435

Prepared by
EA Engineering, Science, and Technology, Inc., PBC
320 Gold Avenue SW, Suite 1300
Albuquerque, New Mexico 87102
Contract No. W912DR-12-D-0006
Delivery Order DM01

NOTICE

This Construction Completion Report was prepared for the U.S. Army Corps of Engineers by EA Engineering, Science, and Technology, Inc., PBC for the purpose of expanding the current groundwater treatment system for containment of the dissolved-phase ethylene dibromide (EDB; also known as 1,2-dibromoethane) plume associated with the Kirtland Air Force Base Bulk Fuels Facility, Solid Waste Management Unit ST-106/SS-111. This work is performed under the U.S. Air Force Environmental Restoration Program, under requirements set forth in the Resource Conservation and Recovery Act permit issued to Kirtland Air Force Base, with the New Mexico Environment Department serving as the lead regulatory agency. This Construction Completion Report describes the addition of extraction equipment in KAFB-106239 and associated conveyance line to the existing groundwater treatment system that will assist in the collapse of the distal EDB plume.

Government agencies and their contractors registered with the Defense Technical Information Center should direct requests for copies of this report to: Defense Technical Information Center, Cameron Station, Alexandria, Virginia 22304-6145.

Non-government agencies may purchase copies of this document from: National Technical Information Service, 5285 Port Royal Road, Springfield, Virginia 22161.

REPORT DOCUMENTATION PAGE

Form Approved
OMB No. 0704-0188

Public reporting burden for this collection of information is estimated to average 1 hour per response, including the time for reviewing instructions, searching existing data sources, gathering and maintaining the data needed, and completing and reviewing this collection of information. Send comments regarding this burden estimate or any other aspect of this collection of information, including suggestions for reducing this burden to Department of Defense, Washington Headquarters Services, Directorate for Information Operations and Reports (0704-0188), 1215 Jefferson Davis Highway, Suite 1204, Arlington, VA 22202-4302. Respondents should be aware that notwithstanding any other provision of law, no person shall be subject to any penalty for failing to comply with a collection of information if it does not display a currently valid OMB control number. **PLEASE DO NOT RETURN YOUR FORM TO THE ABOVE ADDRESS.**

1. REPORT DATE *(DD-MM-YYYY)*	**2. REPORT TYPE**	**3. DATES COVERED** *(From - To)*
31-05-2018	Final	21-07-2017 – 06-04-2018

4. TITLE AND SUBTITLE Construction Completion Report for Extraction Well Equipment at KAFB-106239 and Conveyance Line Solid Waste Management Unit ST-106/SS-111 Kirtland Air Force Base, New Mexico	**5a. CONTRACT NUMBER** W912DR-12-D-0006
	5b. GRANT NUMBER
	5c. PROGRAM ELEMENT NUMBER
6. AUTHOR(S) EA Engineering, Science, and Technology, Inc., PBC	**5d. PROJECT NUMBER** 62599DM01
	5e. TASK NUMBER DM01
	5f. WORK UNIT NUMBER Not applicable
7. PERFORMING ORGANIZATION NAME(S) AND ADDRESS(ES) **AND ADDRESS(ES)** EA Engineering, Science, and Technology, Inc., PBC 320 Gold Avenue SW, Suite 1300 Albuquerque, New Mexico 87102	**8. PERFORMING ORGANIZATION REPORT NUMBER** Not assigned
9. SPONSORING / MONITORING AGENCY NAME(S) AND ADDRESS(ES) U.S. Army Corps of Engineers–Albuquerque District 4101 Jefferson Plaza NE Albuquerque, New Mexico 87109-3435	**10. SPONSOR/MONITOR'S ACRONYM(S)**
	11. SPONSOR/MONITOR'S REPORT NUMBER(S)
12. DISTRIBUTION / AVAILABILITY STATEMENT	
13. SUPPLEMENTARY NOTES	

14. ABSTRACT

This Construction Completion Report describes the installation of extraction equipment into KAFB-106239 and conveyance line between the wellhead and the existing groundwater treatment system (GWTS) associated with the Bulk Fuels Facility site at Solid Waste Management Unit ST-106/SS 111, located on the Kirtland Air Force Base (AFB), New Mexico, as part of an interim measure for remediation of the off-Base portion of the dissolved-phase ethylene dibromide groundwater plume. This project included the addition of extraction equipment to well KAFB-106239 and associated conveyance line to the existing GWTS facility. Actions taken to complete this addition included installation of approximately 2,500 feet of dual wall conveyance line pipe; two vaults; and wellhead instrumentation, components, communications, and electrical equipment.

15. SUBJECT TERMS

Construction Completion Report, Kirtland AFB, Bulk Fuels Facility, ethylene dibromide, dissolved-phase plume, extraction wells, GWTS, and Solid Waste Management Unit ST-106/SS-111, Interim Measure

16. SECURITY CLASSIFICATION OF:			**17. LIMITATION OF ABSTRACT**	**18. NUMBER OF PAGES**	**19a. NAME OF RESPONSIBLE PERSON**
					Devon E. Jercinovic
a. REPORT	**b. ABSTRACT**	**c. THIS PAGE**	ABSTRACT	2,161	**19b. TELEPHONE NUMBER** *(include area code)*
UNCLASSIFIED	UNCLASSIFIED	UNCLASSIFIED			505-715-4248

Standard Form 298
(Rev. 8-98) **Prescribed by ANSI Std. Z39.18**

40 CFR 270.11
DOCUMENT CERTIFICATION

I certify under penalty of law that this document and all attachments were prepared under my direction or supervision according to a system designed to assure that qualified personnel properly gather and evaluate the information submitted. Based on my inquiry of the person or persons who manage the system, or those persons directly responsible for gathering the information, the information submitted is, to the best of my knowledge and belief, true, accurate, and complete. I am aware that there are significant penalties for submitting false information, including the possibility of fines and imprisonment for knowing violations.

Richard W. Gibbs

RICHARD W. GIBBS, Colonel, USAF
Commander, 377th Air Base Wing

11 MAY 18
Date

This document has been approved for public release.

Othana Zuch

KIRTLAND AIR FORCE BASE
377th Air Base Wing Public Affairs

11 May 18
Date

PREFACE

This Construction Completion Report is prepared by EA Engineering, Science, and Technology, Inc., PBC (EA) for the U.S. Army Corps of Engineers (USACE), under Contract Number W912DR-12-D-0006, Delivery Order DM01 and pertains to expanding the groundwater treatment system (GWTS) that was installed as an interim measure to address the Kirtland Air Force Base (AFB) Bulk Fuels Facility (BFF) site at Solid Waste Management Unit ST-106/SS-111. The BFF site is located in Albuquerque, New Mexico. This Construction Completion Report was prepared in accordance with the permit issued to Kirtland AFB under the Resource Conservation and Recovery Act and applicable federal, state, and local laws and regulations.

The objective for this Construction Completion Report is to detail the activities that were performed to connect a new extraction well to the current GWTS facility for containment of the dissolved-phase ethylene dibromide (EDB) plume associated with the BFF site. This project included the installation of extraction equipment to well KAFB-106239 and associated conveyance line to the existing GWTS facility. This project included addition to the GWTS facility via construction of approximately 2,500 feet of dual wall conveyance line pipe; two vaults; and wellhead instrumentation, components, communications, and electrical equipment.

This Construction Completion Report details the activities that were performed between September 25, 2017 and April 06, 2018. Mr. Trent Simpler, PE, is the USACE–Albuquerque District Project Manager. The Environmental Restoration Section Chief for this program is Mr. Scott Clark of Kirtland AFB. The Construction Completion Report was prepared by Devon Jercinovic, PG, CPG, PMP; Kevin McKeage, EI; Tyler Curley, PE; Lucas Rief, PE; and Lee Becker, PE of EA, with Devon Jercinovic as the EA Project Manager.

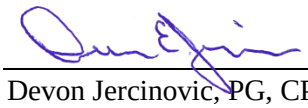

Devon Jercinovic, PG, CPG, PMP
Project Manager
EA Engineering, Science, and Technology, Inc., PBC

CONTENTS

Section **Page**

EXECUTIVE SUMMARY ES-1

1. INTRODUCTION 1-1

1.1 SITE DESCRIPTION AND PROJECT BACKGROUND 1-1
1.2 PROJECT OBJECTIVES 1-1
1.3 REPORT ORGANIZATION 1-2

2. PROJECT ACTIVITIES 2-1

2.1 MOBILIZATION AND SITE SETUP 2-1
2.2 WELLHEAD EQUIPMENT 2-1
2.3 CONVEYANCE LINE PIPE 2-2
2.4 ELECTRICAL 2-2
2.5 UTILITY RELOCATE 2-3
2.6 PAINT AND FINISHES 2-3
2.7 CONTROLS 2-3
2.8 SUBSTANTIAL COMPLETION 2-4
2.9 SYSTEM STARTUP AND SHAKEDOWN 2-4

3. QUALITY CONTROL 3-1

3.1 CONSTRUCTION QUALITY CONTROL PLAN 3-1
3.2 THREE PHASES OF CONTROL 3-1
3.3 PROJECT RECORDS 3-2
3.4 SUBMITTAL REVIEW AND APPROVAL 3-3
3.5 MATERIALS RECEIVING AND DOCUMENTATION 3-3
3.6 QUALITY CONTROL TESTING 3-3
3.7 PUNCH LISTS 3-3
3.8 VARIANCES AND NONCONFORMANCE 3-4
3.9 SITE PHOTOGRAPHS 3-4

4. SUMMARY AND CONCLUSION 4-1

5. REFERENCES 5-1

APPENDICES

A Quality Control Records, Miscellaneous Reports, and Documentation

Attachment 1: City of Albuquerque Work Order Documentation
Attachment 2: Preparatory Phase Meeting Minutes
Attachment 3: Initial Phase Meeting Minutes
Attachment 4: Daily Construction Quality Management Reports
Attachment 5: Testing Documentation
Attachment 6: Punch Lists
Attachment 7: Additional Safety Documentation
Attachment 8: Permit Closeout Documentation
Attachment 9: Subcontractor Documentation

B Submittals

Attachment 1: Engineer-Approved Submittals
Attachment 2: Closeout Submittals
Attachment 3: Field Change Approval Emails

C Record Drawings

D Warranties

FIGURES

1-1 Site Map

TABLES

3-1 Summary of Field Changes

ACRONYMS AND ABBREVIATIONS

AFB	Air Force Base
BFF	Bulk Fuels Facility
CB&I	CB&I Federal Services, LLC
CCR	Construction Completion Report
CFR	Code of Federal Regulations
EA	EA Engineering, Science, and Technology, Inc., PBC
EDB	ethylene dibromide
gpm	gallon(s) per minute
GWTS	groundwater treatment system
HDPE	high density polyethylene
I&CS	I&C Solutions LLC
LLC	limited liability company
NMED	New Mexico Environment Department
No.	number
QC	quality control
RMCI	RMCI Incorporated
Rupert	Rupert Plumbing and Heating, Inc.
Site	Bulk Fuels Facility site
SWMU	Solid Waste Management Unit
USACE	U.S. Army Corps of Engineers
VA	Veteran's Affairs
Wilson Electric	Wilson Electric Services Corporation, LLC

EXECUTIVE SUMMARY

This Construction Completion Report (CCR) has been prepared by EA Engineering, Science, and Technology, Inc., PBC (EA) to address activities performed at Solid Waste Management Unit ST-106/SS-111, the Bulk Fuels Facility (BFF) at Kirtland Air Force Base (AFB).

The objective for this CCR is to detail the activities that were performed to expand the current groundwater treatment system (GWTS) facility for containment of the dissolved-phase ethylene dibromide (EDB) plume associated with the BFF site. This project included the installation of extraction equipment to well KAFB-106239 and associated conveyance line to the existing GWTS facility. This project included connection of a new extraction well (KAFB-106239) to the GWTS facility via construction of approximately 2,500 feet of dual wall conveyance line pipe; two vaults; and wellhead instrumentation, components, communications, and electrical equipment. The work completed for this project is described in the following sections:

- ***Section 1***—Presents an introduction to the project, a site description and background to the project, overview of the project objectives, and organization of the CCR.

- ***Section 2***—Presents the major activities completed during construction with milestone dates and significant details, including mobilization and site setup, equipment delivery, installation of pipes and pipe supports, instrumentation electrical components, paint and finishes, controls, substantial completion, and system startup and shakedown.

- ***Section 3***—Presents the quality control (QC) measures used during construction including three phases of control, project records, submittal review and approval, materials receiving and documentation, QC testing, substantial completion punch lists, and site photographs.

- ***Section 4***—Presents a summary of the project and conclusion stating the project has been completed.

The GWTS addition has been completed in accordance with the contract drawings and technical specifications and EA considers this CCR and the work that it describes to be complete.

1. INTRODUCTION

Under Contract Number (No.) W912DR-12-D-0006, Delivery Order DM01, EA Engineering, Science, and Technology, Inc., PBC (EA) was contracted to perform tasks for the U.S. Army Corps of Engineers (USACE) associated with expanding the groundwater treatment system (GWTS) at Solid Waste Management Unit (SWMU) ST-106/SS-111, at Kirtland Air Force Base (AFB), New Mexico as part of an interim measure for remediation of the off-Base portion of the dissolved-phase ethylene dibromide (EDB) (a fuel additive) groundwater plume (Figure 1-1). This SWMU is known as the Bulk Fuels Facility (BFF) site (Site). Environmental restoration efforts at the Site are being conducted under requirements set forth in the Resource Conservation and Recovery Act Permit No. NM9570024423 with the New Mexico Environment Department (NMED) serving as the lead regulatory agency (NMED, 2010). This Construction Completion Report (CCR) describes the connection of a new extraction well (KAFB-106239) to the GWTS that extracts, conveys, treats, and discharges groundwater from the EDB plume. Work for this project was completed in accordance with the Work Plan for the BFF Expansion of the Dissolved-Phase Plume GWTS Design SWMU ST-106/SS-111 (USACE, 2017a).

1.1 Site Description and Project Background

Kirtland AFB is located in Bernalillo County, in central New Mexico, southeast of and adjacent to the City of Albuquerque and Albuquerque International Sunport (Figure 1-1). The approximate area of the Base is 52,287 acres. The Site is located in the northwestern portion of Kirtland AFB.

The BFF and associated infrastructure operated from 1953 until 1999. During this time, the fueling area was separated into a tank holding area where bulk shipments of fuel were received and a fuel loading area where individual fuel trucks were filled. Kirtland AFB removed the underground piping at the facility from service in 1999 due to discovery of underground leakage. Even though the fuel leak was identified by Kirtland AFB, the exact history of the leaks or releases is unknown. Releases could have occurred when fuel was transferred from railcars to the pump house. Initially, it was thought that the leak only affected surface soil around the identified source area; however, Kirtland AFB learned through characterization activities that the leaked fuel had reached the groundwater table and that the dissolved-phase fuel contamination migrated northeast and north of Kirtland AFB. Over time, EDB had dissolved in groundwater and mobilized from the source area downgradient in the direction of groundwater flow, thus resulting in the formation of a dilute plume.

In order to comply with NMED Hazardous Waste Bureau requirements, interim measures were implemented for both groundwater and soil. The goals of the groundwater interim measure are to protect drinking water supply wells, collapse the EDB plume, and remediate the light non-aqueous phase liquid. The first phase of the groundwater interim measure consisted of the installation of three extraction wells and construction of the first treatment train of the GWTS. In the first phase, CB&I Federal Services LLC (CB&I) designed and oversaw the construction of a GWTS; a collection system comprised of extraction wells, pipelines, well vaults, and valve vaults; and a discharge system comprised of pipelines, valve vaults, an injection well, and a discharge at the Tijeras Arroyo Golf Course main pond. Under this project, the GWTS has been expanded to implement the groundwater interim measure.

1.2 Project Objectives

The objective for this project is to add extraction equipment to KAFB-106239 and install a conveyance line to the current GWTS facility for containment of the dissolved-phase EDB plume associated with the Site. The extent of the EDB plume as of the second quarter of 2017 is depicted on Figure 1-1. The

GWTS was designed to extract and treat up to 800 gallons per minute (gpm) of groundwater. Groundwater is pumped from wells located to the west of the Base to a treatment facility located on-Base, treated to remove EDB and any other volatile organic compounds by carbon adsorption, and then discharged either to the Tijeras Arroyo Golf Course main pond or gravity injection well KAFB-7.

Initially, the treatment facility was outfitted with equipment capable of treating up to 400 gpm (USACE, 2016a). In 2017, the second treatment train was installed to bring the total capacity of the treatment system up to 800 gpm (USACE, 2017b). This construction project includes the installation of equipment into a fourth, off-Base extraction well KAFB-106239, connection to the on-Base GWTS facility via construction of approximately 2,500 feet of dual wall conveyance line pipe; two vaults; and wellhead instrumentation, components, communications, and electrical equipment. Extraction well KAFB-106239 was installed in early 2017 in the City of Albuquerque right-of-way off-Base and the Well Completion Report is documented separately in the *Appendix B of the Quarterly Report – January–March 2017 Bulk Fuels Facility, Solid Waste Management Unit ST-106/SS-111, Kirtland Air Force Base, New Mexico* dated June 2017 (USACE, 2017c). The GWTS expansion has been completed in accordance with the contract approved drawings and technical specifications. Design modifications have been incorporated into the GWTS addition as approved by USACE.

1.3 Report Organization

This CCR is divided into the following sections:

- ***Section 1***—Presents an introduction to the project, a Site description and background to the project, overview of the project objectives, and organization of the CCR.

- ***Section 2***—Presents the major activities completed during construction with milestone dates and significant details, including mobilization and Site setup, equipment delivery, installation of pipes and pipe supports, instrumentation modifications, electrical components, paint and finishes, controls, substantial completion, and system startup and shakedown.

- ***Section 3***—Presents the quality control (QC) measures used during construction including three phases of control, project records, submittal review and approval, materials receiving and documentation, QC testing, punch lists, and Site photographs.

- ***Section 4***—Presents a summary of the project and conclusion stating the project has been completed.

Figures and Appendices are provided at the end of the CCR (included on compact disc) as follows:

- Figure 1-1: Site Map

- Appendix A: QC Records, Miscellaneous Reports, and Documentation

  - Attachment 1: City of Albuquerque Work Order Documentation
  - Attachment 2: Preparatory Phase Meeting Minutes
  - Attachment 3: Initial Phase Meeting Minutes
  - Attachment 4: Daily Construction Quality Management Reports
  - Attachment 5: Testing Documentation
  - Attachment 6: Punch Lists

- Attachment 7: Additional Safety Documentation
- Attachment 8: Permit Closeout Documentation
- Attachment 9: Subcontractor Documentation

- Appendix B: Submittals

  - Attachment 1: Engineer-Approved Submittals
  - Attachment 2: Field Change Approval Emails

- Appendix C: Record Drawings

  - Attachment 1: As-Builts City of Albuquerque Right-of-way
  - Attachment 2: As-Builts Complete
  - Attachment 3: KAFB-106239 Construction Diagram
  - Attachment 4: Surveys

- Appendix D: Warranties.

2. PROJECT ACTIVITIES

All work was performed in accordance with the approved Work Plan (USACE. 2017a), approved engineering designs, technical submittals, and construction permits. Approved construction modifications related to field conditions (utility locations, etc.) are noted on the record drawings provided in Appendix C.

2.1 Mobilization and Site Setup

Construction of the wellhead extraction equipment was performed by Techsas Incorporated and their subcontractors. Construction of the conveyance line and electric feed was performed by RMCI Incorporated (RMCI), Wilson Electric Services Corporation, LLC (Wilson Electric), and their respective subcontractors. Construction started with site vegetation removal August 14, 2017 in the City of Albuquerque right of way and mobilization of construction personnel and equipment on September 25, 2017. Mobilization to the Site initially required only limited delivery of small tools and equipment on subcontractor vehicles. Additional tools and equipment such as loaders and excavators were mobilized to the Site as-needed throughout construction. A crane was mobilized to the Site for placement of the wellhead vault on November 9, 2017, and demobilized at the end of the same day.

Prior to any construction activities, safety orientation and training were completed (Appendix A, Attachment 7). All personnel entering the project Site underwent safety orientation and training in accordance with the requirements of the Accident Prevention Plan (EA, 2017a). A Preparatory Phase Meeting was held at the Site with the owner, contractor, and engineer present (Appendix A, Attachment 2). Initial Phase meetings were held at the Site with the owner, contractor, and subcontractors before performing work on each definable feature of work (Appendix A, Attachment 3).

Temporary facilities such as an office trailer and temporary sanitary facilities were installed at the nearby U.S. Veteran's Administration laydown yard, immediately southeast of the wellhead vault. This laydown yard was used for equipment, material, and tool storage. Contractors parked personal vehicles and supporting equipment vehicles in the yard and on the open lot on the south side of the laydown yard.

2.2 Wellhead Equipment

Placement of the wellhead vault was completed by Crane Services Incorporated. The junction vault, to house the tie-in to the existing KAFB-106228 conveyance line, and electrical pull boxes were installed by RMCI.

Major components of the wellhead equipment include the pump end, pump motor, pump wiring, drop pipes, pitless adaptor, well seal, check valves, variable frequency drive, magnetic flow meter, pressure transmitter, and pressure transducer. The extraction well equipment and conveyance line are shown in the Record Drawings (Appendix C).

On November 9, 2017, the wellhead vault was set into place by Crane Services Incorporated. The wellhead vault was offloaded in three sections by boom truck by All American Precast Incorporated and placed onto the ground immediately west of the intended wellhead vault location. The equipment was then moved into marked locations within the wellhead excavation by crane. A crane safety exclusion zone was established around the crane, and only trained and authorized personnel were allowed to enter.

On November 30, 2017, the well pump end, motor, wiring, drop pipe, and pitless adaptor installation were completed by Cascade Drilling, Limited Partnership, Techsas Incorporated's subcontractor.

On December 20, 2017, with all conveyance line piping installed, the wellhead instrumentation was completed by Rupert Plumbing and Heating, Inc. (Rupert). Wellhead controls installation was completed by Wilson Electric and I&C Solutions LLC (I&CS) on January 31, 2018.

2.3 Conveyance Line Pipe

RMCI installed the dual walled high density polyethylene (HDPE) piping for the conveyance line. On September 28, 2017, Asahi/America Incorporated mobilized to the Site and delivered approximately 2,500 feet of dual walled HDPE piping, including specialized fittings and angles. The HDPE pipe delivered was outfitted with pull strands to facilitate the installation of continuous leak detection throughout the conveyance line. All HDPE piping was inspected for damage due to shipping and confirmed to meet the required specifications on the day of delivery.

Prior to installation of any HDPE piping, the welding method was tested and inspected on October 2, 2017. Verification through pneumatic pressure testing of the outer containment pipe weld integrity was performed on October 5, 2017. On October 16, 2017, RMCI began horizontal drilling, digging trench, welding pipe, and installing conveyance line piping. Over the course of the next 5 weeks, RMCI installed the HDPE conveyance line piping via trenching and horizontal drilling. Periodic compaction testing was performed throughout the construction process. Testing occurred on bedding for vaults and backfilled and compacted areas associated with excavations performed at the site. All locations tested passed within minimum and maximum compaction and moisture content percentages.

On November 29, 2017, the interior carrier HDPE piping of the conveyance line was hydrostatically pressure tested, but had to be retested on December 1, 2017 as one of the flange end caps had a minor leak. The flange end cap was replaced and the second hydrostatic test passed with no detectable leakage (Appendix A, Attachment 5). On November 30, 2017, the exterior containment HDPE piping was pneumatically pressure tested. The pneumatic test passed with no detectable loss in pressure (Appendix A, Attachment 5). Following completion of these tests, the KAFB-106228 conveyance line was drained on November 30, 2017; the conveyance line was tied into the KAFB-106228 existing conveyance line on December 1, 2017; and the junction vault was completed on December 4, 2017.

Continuous leak detection was installed into the exterior HDPE containment pipe on December 7, 2017. The leak detection system was tested at multiple stations along the conveyance line route on the same day. The leak detection system accurately reported leak locations within ±25 feet of the simulated leak location and passed all continuity, insulation, and simulation tests.

Site restoration began on December 5, 2017, and included seeding, fertilizing, and mulching applications in accordance with the City of Albuquerque approved plans. Demobilization of RMCI and their equipment was completed on December 12, 2017. Subcontractor daily reports and documentation are provided in Appendix A, Attachment 9.

2.4 Electrical

Wilson Electric furnished and installed electrical equipment associated with the project. On October 2, 2017, Wilson Electric mobilized to the Site and began installation of the electrical equipment. The electrical installation was comprised of rigid metal conduit with threaded connections above grade and chemically welded polyvinyl chloride conduit below grade. The conduits along the conveyance line route distribute 15-kilovolt conductors from the on-Base sectionalizer to the off-Base wellhead electrical pad transformer. From the transformer 480-volt, three-phase conductors were installed to the wellhead

utilizing below grade polyvinyl chloride conduit. The conduit between the pad and wellhead, grounding wires, and the electrical pad itself were completed on October 13, 2017. The pad was poured and smoothed by RMCI. Over the next 5 weeks, Wilson Electric installed the remaining below grade conduit, concrete conduit cap, and pull boxes along the conveyance line route.

On October 27, 2017, the chain-link fence was installed around the electrical pad located on the New Mexico Veteran's Affair (VA) Medical Health Care System property. Installation of the electrical rack including the safety switch, mini load center, surge protector, and junction box was completed on October 27, 2017. Wilson Electric began pulling conductors for power circuits on December 20, 2017, and began pulling wire for control circuits on December 27, 2017. The electrical pad transformer was installed on January 2, 2018. Wire for power circuits and controls was pulled, landed, and spliced by January 11, 2018. All high voltage conductors passed very low frequency testing on January 10, 2018. The electrical pad was inspected and accepted by VA representatives on February 27, 2018.

2.5 Utility Relocate

Utility relocation was performed on the controls conduit for extraction well KAFB-106228 as the existing conduit impeded the installation of the junction vault. The reroute of the controls wiring and conduit was performed by Wilson Electric. The reroute was initiated on November 13, 2017, and completed by November 30, 2017.

2.6 Paint and Finishes

RMCI furnished and applied paints and coatings for the vaults, bollards, and junction vault metallic piping. Rupert furnished and applied paints and coatings for the wellhead vault metallic piping. All paints used were alkyd-based. Painting was completed with brushes or rollers (no sprayers were used). Touchup painting was completed by RMCI on December 8, 2017.

The color of carbon steel piping in the vaults is an eggshell white. Samples of these colors can be taken from remnant buckets of these paints that were left at the treatment plant storage container for this purpose.

2.7 Controls

I&CS furnished and installed control system hardware and programming for the project. I&CS mobilized to the Site on January 23, 2017, to land control circuits at the electrical pad control panel, wellhead, and main control system panel (CP-100) as well as install and test programming.

The variable frequency device panel was furnished by I&CS and installed by Wilson Electric on January 2, 2018. The variable frequency device air conditioner was installed by Wilson Electric on January 16, 2018.

Controls for the GWTS expansion were incorporated into the existing main control panel (CP-100) via fiber optic cable. The fiber optic cable installation was completed and tested by Wilson Electric on January 19, 2017, and extends from CP-100 to the electrical pad control panel located on the off-Base VA property. Both CP-100 and the electrical pad control panel house Allen-Bradley programmable logic controllers, which implement the control algorithm for the treatment system and wellhead operations, respectively. CP-100 had been designed with adequate room to accommodate the additional hardware required for this GWTS expansion.

I&CS also updated the programming of the human machine interface to include graphics of the new extraction well on January 23, 2018. Alarm testing of the wellhead components and vault leak sensors were tested on the same day. I&CS programmed the programmable logic controller to implement the control scheme described in the technical specifications and in accordance with design modifications. Programming updates and troubleshooting continued until February 1, 2018.

On January 30, 2018, the universal power supply was replaced after initial testing determined that the unit was faulty.

2.8 Substantial Completion

On December 5, 2017, RMCI delivered a substantial completion letter. All EA internal punch list items were addressed by January 31, 2018. On February 1, 2018, USACE performed a final inspection of the GWTS addition. Following the final inspection, a punch list was prepared by EA to resolve outstanding USACE items. The punch list items were entirely completed by the contractor on February 28, 2018. The items on the punch list were verified and approved complete, and milestone payment for construction of the GWTS addition was provided by USACE.

A final inspection was held on February 27, 2018, with USACE and the City of Albuquerque inspectors to satisfy the requirements of the City of Albuquerque Work Order 586082. Following the final inspection, the City of Albuquerque accepted the work performed and the Work Order was officially closed out on April 06, 2018. The City of Albuquerque Certificate of Completion is provided in Appendix A, Attachment 1.

2.9 System Startup and Shakedown

Upon approval of the substantial completion, system startup and shakedown began. The system was started on February 5, 2018, when the extraction well KAFB-106239 pump was started and water from that well was treated through the carbon filtration vessels of train 2 in the GWTS building. The system is configured to send treated water to either the Tijeras Arroyo Golf Course ponds or gravity injection well KAFB-7; however, during startup and shakedown testing, the GWTS effluent was sent to the Golf Course until analytical results from the GWTS effluent were obtained and evaluated to ensure compliance with DP-1839 (NMED, 2017).

Shakedown testing began on February 5, 2018, and involved operating the system under close observation while documenting and evaluating the performance of the extraction well and updated programming. Treated water was discharged to the Tijeras Arroyo Golf Course main pond during the shakedown. Prior to shakedown testing, alarm verification and loop checks were performed. Alarms at the wellhead were triggered by manual manipulation by the operator, and the system's response to each alarm state was recorded (Appendix A, Attachment 5). No apparent control issues were identified during the shakedown.

Samples were collected from the influent, intermediate, and effluent sample points during startup and shakedown on both trains. A daily regimen of confirmatory sampling was performed, initially for the first 7 days, then weekly for a month, then monthly thereafter to comply with the GWTS Operation and Maintenance Plan (USACE, 2016b). Additionally, two samples were collected from the wellhead at KAFB-106239 on February 5 and 6, 2018. All analytical shakedown testing results are included in the Quarterly Report for January-March 2018.

During shakedown, construction permits were closed and completed per their respective requirements. Permit closeout Documentation is provided in Appendix A, Attachment 8.

3. QUALITY CONTROL

3.1 Construction Quality Control Plan

A revised Construction QC Plan, which established the QC system of EA to provide the necessary supervision, control phases, and tests for all work items, including that of suppliers and subcontractors, was submitted to USACE and approved in August 2017 (EA, 2017b). Adherence to this document ensured the contractor-furnished equipment, materials, workmanship, construction, finish, functional performance, and identification were in compliance with the applicable contract drawings and technical specifications. The QC program described in that document was implemented during construction of the GWTS expansion.

3.2 Three Phases of Control

A three-phase QC inspection process as described in the Construction QC Plan (EA, 2017b) includes a Preparatory Phase, Initial Phase, and Follow-Up Phase as described below.

The Preparatory Phase meeting was held with the construction subcontractor prior to the beginning of work on the GWTS expansion. This meeting was recorded in meeting notes (Appendix A, Attachment 2). Topics discussed at this meeting included Site orientation, scheduling concerns, facility access, security at Kirtland AFB, reporting requirements, and health and safety. The Preparatory Phase inspection included:

- A review of the applicable planning documents (Construction QC Plan [EA, 2017b], and Accident Prevention Plan/Site Safety and Health Plan [EA, 2017a])
- A review of the contract drawings
- A check to ensure that all materials and/or equipment have been delivered or inspected and are in acceptable condition
- A review of provisions that have been made to provide required control inspection and testing
- Examination of the work area to ensure that all required preliminary work has been completed and is in compliance with the contract
- A physical examination of required materials, equipment, and sample work to ensure that they are on hand, conform to technical specifications, and are properly stored
- A review of the applicable activity hazard analysis to ensure safety requirements are met per Engineer Manual 385-1-1, Safety and Health Requirements Manual (Appendix A, Attachment 7)
- A discussion of procedures for controlling quality of the work including repetitive deficiencies, document construction tolerances, and workmanship standards for that feature of work
- A check to ensure that the portion of the plan for the work to be performed has been approved by the Contracting Officer.

The Initial Phase meetings were held with the construction subcontractor at the beginning of each definable feature of work. The Initial Phase inspections included:

- A check of the portion of work done to ensure that it is in full compliance with the contract document requirements
- Verification of adequacy of controls to ensure full contract document compliance
- Verification of the required control inspection and testing
- Establishment of a level of workmanship and verification that meets minimum acceptable workmanship standards
- A check of safety to include compliance with the site safety plan
- A review of the activity hazard analysis with each worker
- Repeat of the Initial Phase for each new crew to work onsite, or any time acceptable specified quality standards are not being met.

The Follow-up Phase consisted of continuous checks to ensure the requirements of the contract documents were being met. Daily quality assurance inspections (follow-up inspections) were performed, and the results of all inspections, testing, and surveillances performed were recorded on the Daily Construction Quality Management Reports (Appendix A, Attachment 4).

3.3 Project Records

Project records consist of many documents. Most fall into one of following several main categories:

- ***Health and Safety Records***—Daily tailgate safety meeting records, attendance rosters, job safety analyses, and incident and near-miss reports.
- ***QC Records***—Preparatory and initial control worksheets, Daily Construction Quality Management Reports, material testing records, and inspection reports.
- ***Production Records***—Daily production reports, receipts, and bills of lading.
- ***Sampling/Waste Management Records***—Collected sample forms, chains-of-custody forms, laboratory reports, and shipping manifests.
- ***Engineering Records***—Contract drawings, shop drawings, as-built drawings, record drawings, technical specifications, and submittals.
- ***Photographs***— Photographs to document major activities or newly installed equipment.

This CCR includes portions of the preceding list that are essential to document the completion of the construction phase in the appendices, which are presented on compact disc.

3.4 Submittal Review and Approval

Technical submittals were prepared as required by the technical specifications and per the pre-approved submittal registry as listed in the Construction QC Plan (EA, 2017b). Submittals requiring engineer-approval were scheduled and made prior to the acquisition of the material or equipment. Submittals were prepared by the contractors, RMCI, Wilson Electric, and Techsas Incorporated (including their subcontractor IC&S), and submitted to EA for approval. All items were checked and approved by the EA Construction Manager, and each item was signed by the EA Construction Manager indicating action taken. Upon approval by EA, these items were submitted to USACE and approved. Engineer-approved submittals were provided to USACE via email, stored on EA file servers, and housed at the project Site in hard copies (Appendix B, Attachment 1). Warranties have been provided for all treatment system equipment and control systems constructed for the GWTS expansion (Appendix D).

Each submittal was reviewed for completeness and sufficient detail to allow ready determination of compliance with contract document requirements. Where sufficient detail was not provided, the submittals were rejected by EA and resubmitted by the contractor. Submittal reviews are for general compliance with the contract documents. The engineer does not assume responsibility for correctness of dimensions or detail upon approval of a submittal. A lack of exceptions noted by the engineer does not waive the contractor's obligation to comply with contract drawings and technical specifications. Deviations from the contract document requirements were noted and corrected prior to construction.

3.5 Materials Receiving and Documentation

All materials used during construction and equipment installed were inspected and verified to be in accordance with the contract drawings and technical specifications. Items that are described by submittals requiring engineer approval were inspected to verify they were identical in make/manufacture to that which was approved. Verifying documentation for each of these inspections is included in the Daily Construction Quality Management Reports (Appendix A, Attachment 4).

3.6 Quality Control Testing

A wide array of QC testing (Appendix A, Attachment 5) was performed that includes, but was not limited to, the following:

- Hydrostatic and pneumatic tests for the KAFB-106239 conveyance line
- Control system tests to ensure all the peripherals functioned properly, all transmitter loops operated properly, all component status indicators were functioning properly, and all interlocks on the control software responded properly to any potential alarm conditions
- Flowmeter calibration verification via sight glass level measurements and pump start and end time recordings.

3.7 Punch Lists

EA maintained a punch list of items that were found to be unfinished or needed to be addressed near the end of the construction schedule (Appendix A, Attachment 6). This punch list was completed on January 31, 2018. On February 1, 2018, 10 additional items identified by USACE in relation to the electrical pad

and wellhead were included on the punch list. All items were addressed prior to final inspection on February 27, 2018.

A shakedown punch list was developed during the system startup and shakedown testing (Appendix A, Attachment 6). Items on the shakedown punch list were not detectable until the system was operating, but were identified during the shakedown testing. The shakedown punch list was submitted to USACE on February 28, 2018, and any outstanding items were addressed by the contractor, via warranty service, by April 06, 2018.

3.8 Variances and Nonconformance

During the building construction phase of work, variations to the contract drawings were handled via the Request for Information process. Variations from the contract drawings and specifications are listed in Table 3-1 and field change email approvals are provided in Appendix B, Attachment 2. All variations were checked and approved by the EA Construction Manager and submitted to USACE for final approval before final acceptance. Any potential non-conformances to the technical specifications were brought to the attention of the project engineer, whereupon they were addressed immediately such that none were allowed to advance to the level of a formal non-conformance.

3.9 Site Photographs

Site activities, conditions, materials, and levels of completion were routinely documented with photographs throughout the project. Photographs were included in each Daily Construction Quality Management Report (Appendix A, Attachment 4). The photographs were labeled with the location, date, direction of the camera, and a brief description of the subject matter that was being depicted. Photographs were selected to document major activities or newly installed equipment each day.

4. SUMMARY AND CONCLUSION

The objective of this construction project was to connect an off-Base extraction well to the current GWTS facility associated with the Site at SWMU ST-106/SS-111, located on the Kirtland AFB, New Mexico, as part of an interim measure for remediation of the off-Base portion of the dissolved-phase EDB groundwater plume. Groundwater is pumped from wells located to the west of the Base to a treatment facility located on-Base, treated to remove EDB and any other volatile organic compounds by carbon adsorption, and then discharged either to the Tijeras Arroyo Golf Course main pond or gravity injection well KAFB-7. This project included the installation of extraction equipment at KAFB-106239 and the installation of conveyance line from KAFB-106239 to the existing GWTS facility. This project was accomplished via the construction of approximately 2,500 feet of dual wall conveyance line pipe; two vaults; and wellhead instrumentation, components, communications, and electrical equipment. This addition to the GWTS has been completed in accordance with the approved Work Plan (USACE. 2017a), contract drawings, technical submittals, and construction permits.

5. REFERENCES

EA Engineering, Science, and Technology, Inc., PBC (EA). 2017a. *Accident Prevention Plan for the Kirtland Air Force Base Bulk Fuels Facility Expansion of the Dissolved-Phase Plume Groundwater Treatment System Design Revision 5.* Kirtland Air Force Base, New Mexico. July.

EA. 2017b. *Construction Quality Control Plan, Kirtland Air Force Base Bulk Fuels Facility Expansion of the Dissolved-Phase Plume Groundwater Treatment System Design Revision 1*. Kirtland Air Force Base, New Mexico. August.

New Mexico Environment Department (NMED). 2010. Hazardous Waste Treatment Facility Operating Permit, EPA ID No. NM9570024423, Issued to U.S. Air Force for the Open Detonation Unit Located at Kirtland Air Force Base, Bernalillo County, New Mexico, by the NMED Hazardous Waste Bureau. July.

NMED. 2017. Discharge Permit Issuance DP-1839, Kirtland Air Force Base, Bernalillo County, New Mexico, by the New Mexico Environment Department Groundwater Quality Bureau. April.

U.S. Army Corps of Engineers (USACE). 2016a. *Construction Completion Report Groundwater Treatment System Construction and Well Installation at Kirtland Air Force Base.* Bulk Fuels Facility Solid Waste Management Unit ST-106/SS-111. Prepared by CB&I Federal Services LLC for USACE–Albuquerque District. May.

USACE. 2016b. *Operations and Maintenance Plan, Groundwater Treatment System, Bulk Fuels Facility, SWMU ST-106/SS-111.* Prepared by EA Engineering, Science, and Technology, Inc., PBC for the USACE Albuquerque District under USACE Contract No. W912WR-12-D-0006. August.

USACE. 2017a. *Work Plan for the Bulk Fuels Facility Expansion of the Dissolved-Phase Plume Groundwater Treatment System Design Revision 2, Solid Waste Management Unit ST-106/SS-111.* Prepared by EA Engineering, Science, and Technology, Inc., PBC for USACE–Albuquerque District. January.

USACE. 2017b. *Construction Completion Report Groundwater Treatment System Construction and Well Installation at Kirtland Air Force Base.* Bulk Fuels Facility Solid Waste Management Unit ST-106/SS-111. Prepared by EA Engineering, Science, and Technology, Inc., PBC for USACE–Albuquerque District. June.

USACE. 2017c. *Quarterly Monitoring Report January-March 2017, Bulk Fuels Facility, SWMU ST-106/SS-111.* Prepared by EA Engineering, Science, and Technology, Inc., PBC for the USACE–Albuquerque District under USACE Contract No. W912WR-12-D-0006. June 30.

FIGURE

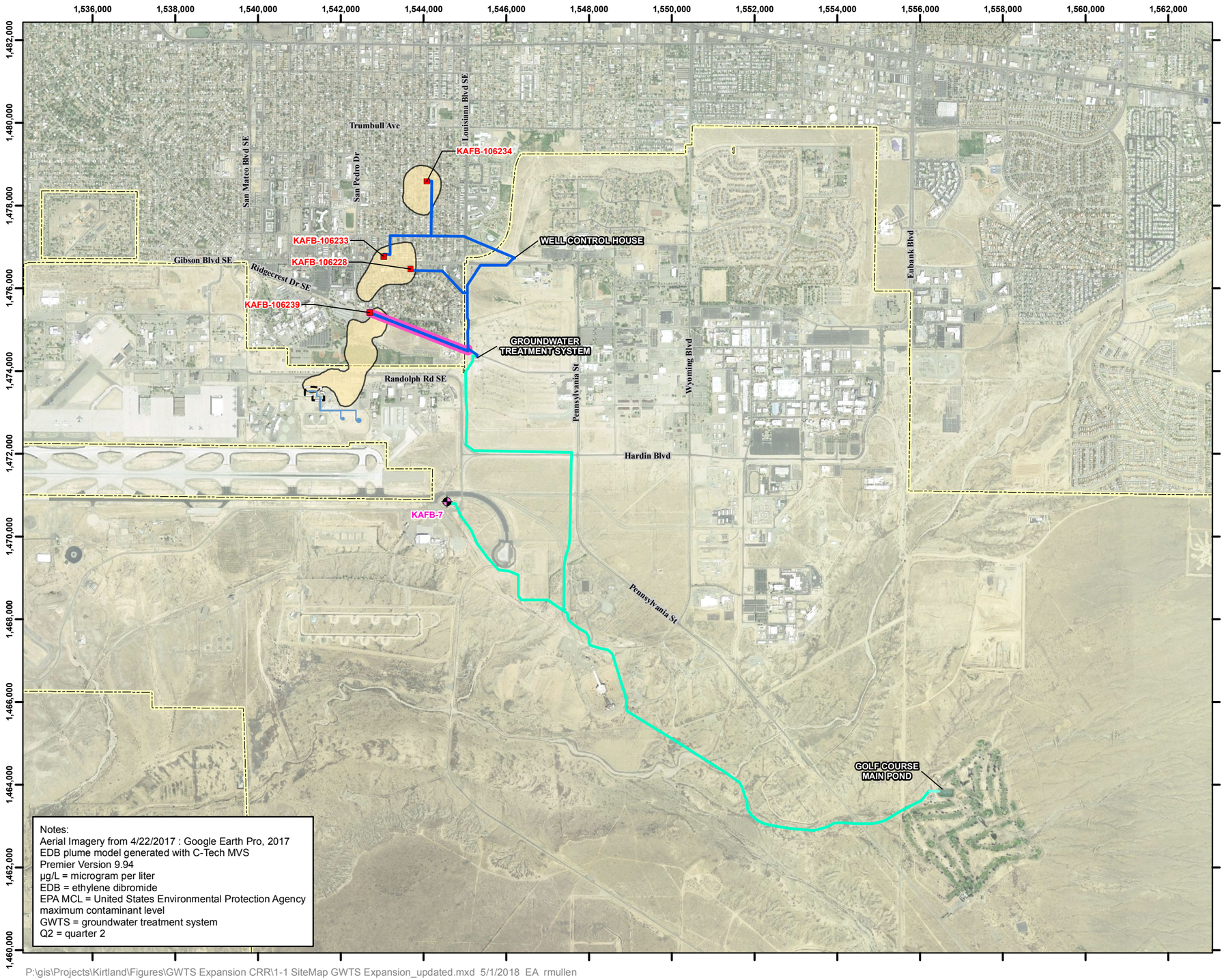

P:\gis\Projects\Kirtland\Figures\GWTS Expansion CRR\1-1 SiteMap GWTS Expansion_updated.mxd 5/1/2018 EA rmullen

Legend

- Extraction Well
- Injection Well KAFB-7
- Former Aboveground Storage Tank
- Former Fuel Transfer Line
- GWTS Influent Piping
- GWTS Influent Piping - Newly Installed
- GWTS Effluent Piping
- Installation Boundary
- Q2 2017 EDB Plume with Concentration > 0.05 µg/L (EPA MCL)
- Source Area

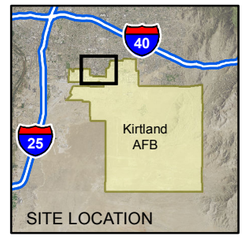

N

0 1,250 2,500 5,000

Feet

1 inch = 2,500 feet

Projection: NAD83 State Plane New Mexico Central FIPS3002 Feet

CONSTRUCTION COMPLETION REPORT
FOR EXTRACTION WELL EQUIPMENT AT
KAFB-106239 AND CONVEYANCE LINE
BULK FUELS FACILITY
SOLID WASTE MANAGEMENT UNIT ST-106/SS-111
KIRTLAND AIR FORCE BASE, NEW MEXICO

FIGURE 1-1

SITE MAP

TABLE

Table 3-1
Summary of Field Changes

Field Changes:	Reasoning for Change:	Submittal[a]	Approved by:	Approval date
Pump (Pump and Motor Ends)	The wrong pump end was ordered, the correct pump end could not be obtained within a reasonable time. Equivalent pump and motor ends were approved and installed.	Techsas Submittal 3	EA/ USACE	11/29/2017
HDD Alignment Crossing Ridgecrest Dr.	The Ridgecrest Dr. HDD crossing alignment was changed to a 45° route under Ridgecrest Dr. to prevent trenching under utilities at Sta 21+50.	General Field Changes 1	EA	9/27/2017
HDD Under SAS Line (Sta 4+65 to Sta 5+85)	City of Albuquerque required complete concrete encasement of the SAS line located at Sta 5+25 if it was exposed during trenching. HDD was used to install the conveyance line under the SAS line located near Sta 5+25 to avoid exposure of the SAS line.	General Field Changes 1	EA	9/27/2017
Trenching Under Gas Line (Sta 21+65 to Sta 22+00)	The HDD rig could not bore under the gas line located at Sta 21+90 due to the gas line's proximity to the Ridgecrest Dr. bore. As a result the conveyance line was installed via open trenching between Sta 21+65 and Sta 22+00.	Field approval, see daily report from 11/15/17	EA	11/15/2017
Pipe Burial Depth	Benching and sloping step outs required for trenching to depths specified in the plans would have possibly resulted in large amount of asphalt repair. To avoid asphalt repairs the conveyance line was installed to maintain the minimum 3-foot burial depth throughout the line.	General Field Changes 2	EA	9/29/2017
Low/High Spots in the Pipe at HDD Locations	As a result of change in burial depth, low and high spots in the conveyance line will be present in the areas of the HDD borings.	General Field Changes 2	EA	9/29/2017
Vault Design	Due to comments regarding constructability from All American Precast as well as overall weight, both the well head vault and the junction vault were constructed in three sections, a base, side walls, and a lid with built-in hatches. Vault sections were stacked in the field, butyl mastic was placed between the sections as a sealant.	RMCI Submittal 16	USACE	9/18/2017
Movement of the Electrical Pad	The VA requested that all landscaping remain around the electrical pad. The electrical pad was moved approximately 2 feet east to avoid tree removal.	Daily Report 9/26/17	EA/USACE	9/26/2017
Electric/Communication Line Route Near Electrical Pad	See As-Built drawings for electric/communication line locations between the electrical pad and the well head. Line locations were changed to prevent excavation under the VA parking lot stucco wall.	Field approval	EA	10/11/2017
Communication Line Burial	The fiber optic communication line was installed in a 2-inch polyvinylchloride conduit (per the electrical drawings) instead of directly buried (per the civil drawings). This allows the fiber optic line to be installed as a continuous run instead of being spliced.	Design comments	EA	7/10/2017
Medium Voltage Cable Type	Aluminum medium voltage cable was used in place of copper.	Wilson Submittal 2	USACE	12/15/2017
Stainless Steel Drop Pipe	A 60-foot section of 304 stainless steel drop pipe was installed above the pump due to expected corrosion.	Techsas Submittal 3	EA/ USACE	11/29/2017
Well Vault Butterfly Valve	Approved equivalent butterfly valve were used when the originals could not be obtained within a reasonable time.	Techsas Submittal 4.1	USACE	12/7/2017
Reroute of the KAFB-106228 Communication Lines	The communication line for well KAFB-106228 was located directly above the existing conveyance line. The communication line had to be rerouted to allow for the tie-in of the new conveyance line into the existing conveyance line.	General Field Changes 3	USACE	10/18/2017

[a] Submittals are provided in Appendix B of this construction completion report.
EA = EA Engineering, Science, and Technology, Inc., PBC
HDD = Horizontal Directional Drilling
SAS = Sanitary Sewer
Sta = Station
USACE = U.S. Army Corps of Engineers

APPENDIX A

Quality Control Records, Miscellaneous Reports, and Documentation

(Provided on compact disc)

- **Attachment 1: City of Albuquerque Work Order Documentation**
- **Attachment 2: Preparatory Phase Meeting Minutes**
- **Attachment 3: Initial Phase Meeting Minutes**
- **Attachment 4: Daily Construction Quality Management Reports**
- **Attachment 5: Testing Documentation**
- **Attachment 6: Punch Lists**
- **Attachment 7: Additional Safety Documentation**
- **Attachment 8: Permit Closeout Documentation**
- **Attachment 9: Subcontractor Documentation**

City of Albuquerque Project Number 586082

KAFB-106239 Conveyance Line

Pre-Construction Meeting (Conclusion of Pre-Construction Phase)

Date: July 21, 2017
Time: 1000-1100 MDT
Attendees: List at end of minutes

Introductions - Introduction by all attendees and affiliation/roles were described. All attendees signed in on the meeting form, and M. Adeeb (COA) requested that the attendee list and contact information be included with the minutes for distribution.

Project Scope - D. Jercinovic (EA) described the overall project scope as it relates to installing the conveyance lines from the existing extraction well KAFB-106239 to the Groundwater Treatment System Building (19150) on Kirtland AFB as part of the planned expansion of the groundwater remediation system. All infrastructure installed will be owned by the USAF and not turned over to COA. P. Johnson (RMCI) described the duration as approximately 16 weeks from mobilization (post site grubbing). M. Adeeb (COA) requested final schedule as soon as available so that inspectors can be on-site for critical activities (drive pits for HDD). M. Adeeb also requested the submittal log and submittals when all have been approved. D. Jercinovic (EA) indicated that submittals have just started to USACE who must approve first.

COA Construction Process – M. Adeeb reviewed the COA steps and process for Construction Phase. M. Adeeb mentioned whether Figure 8 had been submitted (*Request for determination of Outstanding Pro-Rata Charges Water & Sanitary Sewer*). This Figure 8 was not requested during the Design Review Construction Pre-Construction Phase as the USAF remediation infrastructure does not tie to either ABCWUA water lines of the sewer system.

- Surveying and Staking prior to construction (post vegetation removal). M. Adeeb mentioned that presence of termites should be checked before vegetation is sourced off-site.
- Perform Construction Activities (A. Sandoval [COA] will be performing most inspections randomly and some scheduled pending work activity)
- All testing reports for compaction, asphalt materials, must be provided to COA (A. Sandoval); testing company for RMCI is Concrete, Aggregate, and Asphalt Testing, LLC (CA2) an Albuquerque small business opened by former AMEC employee (https://www.ca2testing.com/).
- Submittal of Plan revisions for approval; formal change order process required and engineering fees will be assessed for all change orders
- Pre-Final Inspection
- Completion of As-Builts (first submittal)
  Must include copies of all final EA subcontract invoices for overruns/underruns in order for COA to evaluate if additional fees are required. EA must demonstrate that all subcontractors have been paid. M. Adeeb wanted to make sure final survey included "z" vertical coordinate; however not usual on the horizontal directional drilling (HDD)

except extrapolation from both entry/exit pits. This is how "z" was provided historically on all other influent lines under Gibson and Louisiana.

- Final Inspection and Punch List; Verification Inspection after Punch List with all items resolved and date resolved
- Delivery of final As-Builts with seals and licensed surveyor (2 copies); last on-site inspection
- COA will initiate Final Acceptance Recommendation
- Certificate of Substantial Compliance (Figure 27); Charlotte LaBadie will coordinate

COA Post-Construction Process –

- Certificate of Completion and Acceptance (City Engineer Approval); this process can take 4-6 weeks as it goes through same process to close the Work Order as to receive (DRC, legal, City Engineer approvals).

Action Items

1. EA to provide construction schedule to COA as soon as available (and before start).

2. Smith Engineering to provide email to COA regarding change in methodology on the north side of Ridgecrest (all HDD versus small reach of open trench).

3. EA/RMCI to confirm with HDD subcontractor how accurate the "z" coordinate can be provided.

4. Both EA and RMCI will perform video survey of project area to baseline all pre-existing conditions prior to construction (and vegetation removal) starting.

LIST OF ATTENDEES
KAFB-106239 CONVEYANCE LINE PRE-CONSTRUCTION MEETING
JULY 21, 2017

Participant	Invited	Attended	Phone Number	Email	Role
Muhammed Adeeb, PE - COA	X	X	505-250-2604	madeeb@cabq.gov	Senior Engineer
Henry Blair - COA	X	X	NA	hblair@cabq.gov	Inspection Supervisor
Arlene Sandoval - COA	X	X	505-203-7358	arsandoval@cabq.gov	Inspector
Amy Sanchez. PE - USACE	X	X	505-342-3234	Amy.E.Sanchez@usace.army.mil	Project Manager/COR
Scott Clark – AFCEC	X	X	505-846-9017	scott.clark@us.af.mil	Chief Environmental Restoration
Holly O'Grady, PE – AFCEC	X		505-853-3484	holly.ogrady@us.af.mil	Project Manager Environmental Restoration
George Nemeth - Smith Engineering	X	X	505-314-5593	georgen@smithengineering.pro	Engineer of Record
Phillip Johnson - RMCI	X	X	505-235-1850	pjohnson@rmciinc.com	Project Manager
Devon Jercinovic, PMP - EA	X	X	505-401-1181	djercinovic@eaest.com	Project Manager
Tyler Curley, PE – EA	X	X	719-688-9558	tcurley@eaest.com	Construction Engineer
Kevin McKeage, EI – EA	X	X	316-765-1486	kmckeage@eaest.com	Construction Quality Manager

City of Albuquerque Project Number 586082

KAFB-106239 Conveyance Line

Final Inspection

Date: February 27, 2018
Time: 09:00- 10:30 MDT
Attendees: List at end of minutes

Introductions – Introduction of all attendees with affiliation. All attendees signed in on the meeting form (attached).

City of Albuquerque Final Inspection – D. Jercinovic stated that the construction of the KAFB-106239 extraction well has been completed. M. Adeeb asked if the final inspection had been performed with USACE and if the project was accepted. A. Cordova stated that the final inspection had been performed and the project was accepted. D. Jercinovic asked how the final inspection process should proceed. Mr. Adeeb stated that we should walk the entire site and discuss any field changes that occurred.

- M. Adeeb stated that the language on the As-Built drawings is not appropriate and that he will send over the language that City of Albuquerque prefers. He also stated that the Engineer Seal on the As-Builts will need to cover both the design and the as-built conditions.
- M. Adeeb stated that all survey notes should be place in a separate package
- M. Adeeb asked how far under the sanitary sewer line (SAS) located at Station 5+35 the boring was located. T. Curley stated that a minimum of 18-inches clearance was maintained. T. Curley mentioned that the Albuquerque Bernalillo County Water Utility Authority was contacted regarding boring under the SAS line and they preferred to bore under the line as opposed to trench and encase the SAS line.
- T. Curley mentioned that the elevation profile for the entire line was changed due to safety concerns and trench width concerns. However, the City of Albuquerque specified minimum burial depth of 36-inches was maintained.
- M. Adeeb stated that the current elevation profile of the conveyance line needs to be added to the As-Builts.
- M. Adeeb stated that all original piping be crossed out in red anywhere that a field change in the pipe alignment or elevation occurred, and that the changed condition be drawn in and bubbled in red.
- T. Curley explained the reasoning for changing the alignment at the Ridgecrest Dr. crossing due to interference with private property structures.
- M. Adeeb asked how deep the bore across Ridgecrest Dr. was installed. T. Curley stated that the minimum 18-inches clearance was maintained. M Adeeb asked for an estimate on the boring depth, T. Curley stated that it was installed at a minimum of 80 inches below grade.
- T. Curley stated that there were no further field changes (except for pipe depth) after the Ridgecrest Dr. crossing.

- M. Adeeb asked to set up a meeting to check out the record drawing to complete the As-Builts as well as explain what the As-Builts should look like.
- T. Curley asked if there would be any punch list items associated with the project close out. M. Adeeb stated that there would be not punch list items.
- A meeting was set up for Friday, March 2, 2018 to check out the record drawings.
- The site walk was competed.

Action Items

1. EA to check out record drawings to perform As-Built drawing.
2. EA to submit subcontractor invoicing.
3. EA to submit all testing reports.
4. EA to submit the excavation permits.

Kirtland AFB BFF Project
KAFB-106239 Conveyance Line Expansion – Final Inspection
City of Albuquerque Project Number 586082
27 February 2017

Name	Organization	Phone	E-mail Address
Devon Jercinovic	EA Engineering	401-1181	djercinovic@eaest.com
Phillip Johnson	RMCI	235-1850	pjohnson@rmciinc.com
Kevin McKeage	EA Engineering	316-765-1486	kmckeage@eaest.com
Amy Cordova	USACE	505-615-5095	amy.e.cordova@usace.army.mil
Jerry Patton	RMCI	505-206-2312	jpatton@rmciinc
Tyler Curley	EA	719-686-9558	tcurley@eaest.com
ARLENE SANDOVAL	COA	505-489-0008	arsandoval@cabq.gov
Doug Rizor	COA - streets	505-857-8032	drizor@cabq.gov
Vesel Jensen	COA - Streets	505-768-3842	vjensen@cabq.gov
Muhammed Adeeb	COA - Const. Eng.	505-250-2604	madeeb@cabq.gov

CITY OF ALBUQUERQUE

April 06, 2018

CERTIFICATE OF COMPLETION AND ACCEPTANCE

Devin Jercinovic
EA Engineering, Science and Technology, Inc.
320 Gold Ave SW, Ste. 1300
Albuquerque, NM 87102

RE: **KAFB BFF Expansion of EDB**
City Project Number: **586082**

Dear Mr. Devin Jercinovic:

This is to certify that the City of Albuquerque ("City") accepts the construction of the infrastructure provided in the Work Order Construction Plans, City project number **586082**. The work was completed pursuant to approved plans and construction specifications.

Having satisfied the requirements referenced above, any associated Financial Guaranty, held by the City, can now be released. Any performance/warranty bond and the indemnity in favor of the City shall remain in effect. The contractor's warranty period will begin **April 06, 2018** and is effective for a period of one (1) year.

Should you have any questions or issues regarding this project, please contact me at (505) 924-3996.

PO Box 1293

Albuquerque

NM 87103

www.cabq.gov

Sincerely,

Shahab Biazar, P.E., City Engineer
Development Review Services
Planning Department
City of Albuquerque

cc: **Tyler Curley, EA Engineering** (e-mail)
RMCI, Inc. (e-mail)
Vincent Paul, DMD Maps & Records (e-mail)
Josef Jansen, DMD GIS Coordinator (e-mail)
Doug Rizor, DMD Street Maintenance (e-mail)
Stephen Woodall, DMD Street Maintenance (e-mail)
Jason T. Rodriguez, DMD Street Maintenance (e-mail)
Paula Dodge-Kwan, DMD Traffic Operations (e-mail)
David G. Gutierrez, ABCWUA Utility Development (e-mail)
David Rodriquez, ABCWUA Maps & Records (e-mail)
Martin Sanchez, ABCWUA Maps & Records (e-mail)
Robert Nunez, DMD IT (e-mail)
SIA File, City Project Number: **586082**

City of Albuquerque Project Number 586082

KAFB-106239 Conveyance Line Installation

Pre-Construction Meeting Agenda

Date: September 19, 2017
Time: 0900 MDT
Invited: USACE, EA, RMCI, and Wilson Electric

1. **Introductions**
    a. EA Roles
        i. SSHO Pool – Tyler Curley, PE; Earl Morse, PG; Peter Ferrari; Dustin Graves, PG, CHMM; Gary Desselle
        ii. CQM Pool – Kevin McKeage, EI; Tyler Curley, PE; Luke Rief, PE; Matt Bowman, PE, CCM
        iii. CM Pool – Tyler Curley, PE; Earl Morse, PG; Luke Rief, PE; Matt Bowman, PE, CCM
    b. Key Subcontractors
        i. RMCI
        ii. Wilson Electric
        iii. Techsas
        iv. I&C Solutions

2. **Site Activities**
    a. Conveyance Line Install
    b. Vault Installs
    c. Conduit Install

3. **DFOWs**
    a. Mobilization and Site Preparation
    b. Pipeline and Vault Constructions
    c. Electrical and Communications
    d. Extraction Well Instrumentation

4. **Submittals (Preconstruction)**
    a. Remaining submittals
    b. Expected delivery date and inspections of materials
    c. Materials storage

5. **Specifications**
    a. Procedures for accomplishing each DFOW

6. **Preliminary Work and Permits**
    a. Complete
        i. Bonding
        ii. AF332

iii. On-Base Dig Permit*
iv. COA Fugitive Dust Permit – Complete
v. COA Noise Permit – Complete
vi. COA Building Permit – Complete
vii. COA Work Order – Complete
viii. Erosion and Sediment Control – Complete
ix. Storm Water Pollution Prevention Plan – Complete
x. NMED Design Review – Complete

b. Pending Start of Work
   i. NM811 Line Locates –
   ii. Barricade/Excavation Permits – Pending Start of Work

c. Access – Pending New Day, all others complete

7. Testing (During Construction)

a. Testing to be performed and frequency
b. Review testing from Specifications
c. Testing facilities

8. Health and Safety

a. APP review and certifications for all on-site personnel
b. Review AHAs
c. Review EM 385-1-1
d. Lift Particulars

9. Comments/Concerns

a. Safety is top priority
b. Public should be directed to EA staff
c. Badging in progress
d. New Day access and AFCEC to VA notification
e. COA Work Order Closeout
f. Others?

KAFB-106239 Conveyance Line

Pre-Construction Meeting Minutes

City of Albuquerque Project Number 586082

Date: September 19, 2017
Time: 900-1030 MDT
Attendees: List at end of minutes
Contract: W912DR-12-D-0006-DM01

Introductions - Introduction by all attendees and affiliation/roles were described. All attendees signed in on the meeting form.

USACE Discussion

- Sanchez discussed safety, housekeeping, PPE, and designated smoking areas.
- C. Salazar explained that Base fire hydrant use must first be cleared through USACE if needed.
- D. Jercinovic stated that if EA subcontractors need to bring hazardous materials on base that they need to submit a Hazardous Materials Worksheet and attach an SDS at least 2 weeks in advance of bringing those items on Base.
- C. Salazar mentioned that when performing excavations in the Zia Park neighborhood that modified level D PPE is required including a dust mask (N95) due to the presence of trace Chlordane in the soil. Additionally a hand wash station will need to be provided near the work site and additional dust control measures may need to be implemented to limit exposure.
- Material storage was discussed throughout the group and P. Johnson indicated that equipment would be arriving next week and piping the following week and Federal holiday incorporation into the schedule.
- A. Sanchez and C. Salazar informed all attendees that when working on Base there is a Base specific emergency number (505-853-9111).
- C. Salazar stated that any interactions outside of EA and EA's subcontractors must be documented. A Sanchez described the process of performing changes to work elements.
- D. Jercinovic said that Wilson Electric had mentioned that it was possible to borrow a transformer as the transformer is likely months on backorder. C. Salazar explained that Wilson Electric can check with Base exterior electric on transformer availability, but that USACE would make the final request to borrow the transformer.
- C. Salazar then discussed clear lines of communication through EA, Wilson Electric's VLF testing, and pulling plan.

Site Activities and DFOWs – K. McKeage listed the site activities and identified that this meeting would act as the Preparatory Phase Meeting for the following DFOWs: Mobilization and Site Preparation, Pipeline and Vault Constructions, and Electrical and Communications.

Submittals and Specifications

- K. McKeage then addressed the remaining preconstruction submittals, RMCI's seed certifications and Wilson's transformer submittal. P. Johnson provided delivery dates for materials and storage requirements.
- D. Jercinovic stated that fuel cannot be stored onsite.
- K. McKeage stated the procedure of trenching in sections and that the main procedure concern was coordinating trenching efforts between RMCI and Wilson Electric.

Preliminary Work and Permits and Testing

- K. McKeage identified the list of completed permits. D. Jercinovic stated that Wilson Electric has also obtained a COA electrical permit.
- B. Crooks indicated that one of the largest coordination items was for the accessibility of concrete trucks to the trenching sections along Ridgecrest Dr. SE. P.
- Johnson confirmed that NM811 locates were awaiting work start and that barricade permits had been submitted.
- K. McKeage discussed testing including compaction and moisture testing during backfilling and Wilson Electric's VLF testing.
- B. Crooks indicated that splicing 600 foot intervals of conductors would be required.

Health and Safety and Comments/Concerns

- K. McKeage reiterated that all personnel working on the site must submit to EA appropriate certifications as well as a signed APP review form.
- E. Morse discussed Lift Safety needs for the KAFB-106239 vault installation.
- K. McKeage reiterated that safety is the top priority, any member of the public should be directed toward EA staff.
- RMCI badges are complete and ready for pickup,
- EA is awaiting New Day's access agreement and USACE coordination with AFCEC and the VA regarding the electrical yard fencing.
- K. McKeage and D. Jercinovic informed USACE that COA work order closeout could take additional time on top of completion of the punchlist items. C. Salazar indicated that USACE did not want to delay the installation or completion by contesting COA requests.

Action Items

1. EA to coordinate with Wilson Electric regarding transformer submittal and temporary transformer information.
2. USACE to coordinate with AFCEC and VA regarding fencing
3. RMCI to provide hazardous materials information to EA
4. Wilson Electric to provide EA with pulling plan to submit to USACE

PREPARATORY PHASE CHECKLIST

(CONTINUED ON SECOND PAGE)

SPEC SECTION	DATE
See Attached Table	Sep 19, 2017

CONTRACT NO	DEFINABLE FEATURE OF WORK	SCHEDULE ACT NO.	INDEX #
W912DR-12-D-0006, DM01	MOBILIZATION AND SITE PREPARATION	1	1

PERSONNEL PRESENT — GOVERNMENT REP NOTIFIED 670 HOURS IN ADVANCE: (•) YES ( ) NO — Add / Del

NAME	POSITION	COMPANY/GOVERNMENT
Trent Simpler, PE	Project Manager	USACE
Carlos Salazar, PE	COR	USACE
Amy Sanchez, PE	COR	USACE
Britt Crooks	Field Supverisor	Wilson Electric
Devon Jercinovic, PG, PMP	Project Manager	EA
Matt Bowman, PE, CCM	Construction Quality Manager	EA
Kevin McKeage, EI	Construction Quality Inspector	EA
Earl Morse, PG	Lift/Site Safety and Heath Officer	EA
Phillip Johnson	Project Manager	RMCI
Steve Moore	Lead Safety	RMCI
Tyler Curley, PE	Construction Manager	EA

SUBMITTALS — REVIEW SUBMITTALS AND/OR SUBMITTAL REGISTER. HAVE ALL SUBMITTALS BEEN APPROVED? ( ) YES (•) NO
(IF YES, MAINTAIN IN PRESENT CONDITION AS LONG AS POSSIBLE AND DESCRIBE LOCATION OF SAMPLE) — Add / Del

All submittals complete.

ARE ALL MATERIALS ON HAND? ( ) YES (•) NO
IF NO, WHAT ITEMS ARE MISSING. — Add / Del

Materials will be delivered as part of this DFOW.

CHECK APPROVED SUBMITTALS AGAINST DELIVERED MATERIAL. (THIS SHOULD BE DONE AS MATERIAL ARRIVES.)
COMMENTS: — Add / Del

Checks will be performed upon receipt of materials and reported in the DQCRs.

MATERIAL STORAGE — ARE MATERIALS STORED PROPERLY? (•) YES ( ) NO
IF NO, WHAT ACTION IS TAKEN? — Add / Del

No materials currently stored onsite.

SPECIFICATIONS — REVIEW EACH PARAGRAPH OF SPECIFICATIONS. — Add / Del

Specifications for given materials were reviewed by all parties with the acceptance of submittals.

DISCUSS PROCEDURE FOR ACCOMPLISHING THE WORK. — Add / Del

Wilson Electric and RMCI will work together to coordinate lay down yard organization and equipment storage.

CLARIFY ANY DIFFERENCES. — Add / Del

None

PRELIMINARY WORK & PERMITS — ENSURE PRELIMINARY WORK IS CORRECT AND PERMITS ARE ON FILE.
IF NOT, WHAT ACTION IS TAKEN? — Add / Del

All permits completed.

TESTING — IDENTIFY TEST TO BE PERFORMED, FREQUENCY, AND BY WHOM. — Add / Del

None

WHEN REQUIRED? — Add / Del

N/A

WHERE REQUIRED? — Add / Del

N/A

REVIEW TESTING PLAN. — Add / Del

N/A

HAS TEST FACILITIES BEEN APPROVED? — Add / Del

N/A

SAFETY — ACTIVITY HAZARD ANALYSIS APPROVED? (•) YES ( ) NO
REVIEW APPLICABLE PORTION OF EM 385-1-1. — Add / Del

PREPARATORY PHASE CHECKLIST

(CONTINUED ON SECOND PAGE)

SPEC SECTION	DATE
See Attached Table	Sep 19, 2017

CONTRACT NO	DEFINABLE FEATURE OF WORK	SCHEDULE ACT NO.	INDEX #
W912DR-12-D-0006, DM01	MOBILIZATION AND SITE PREPARATION	1	1

EA APP has been approved and is compliant with EM385-1-1. All personnel working on-site must submit signed documentation stating they reviewed the APP.

MEETING COMMENTS	NAVY/ROICC COMMENTS DURING MEETING.	Add / Del

Safety is the top priority on-site.

OTHER ITEMS OR REMARKS	OTHER ITEMS OR REMARKS.	Add / Del

RMCI will need to provide EA with information on any hazardous materials that need to be brought on Base as EA will need to complete the appropriate paperwork.

Sep 26, 2017

QC MANAGER — DATE

PREPARATORY PHASE CHECKLIST

(CONTINUED ON SECOND PAGE)

SPEC SECTION	DATE
See Attached Table	Sep 19, 2017

CONTRACT NO	DEFINABLE FEATURE OF WORK	SCHEDULE ACT NO.	INDEX #
W912DR-12-D-0006, DM01	PIPELINE AND VAULT CONSTRUCTION	2	2

PERSONNEL PRESENT — GOVERNMENT REP NOTIFIED 670 HOURS IN ADVANCE: (•) YES ( ) NO [Add] [Del]

NAME	POSITION	COMPANY/GOVERNMENT
Trent Simpler, PE	Project Manager	USACE
Carlos Salazar, PE	COR	USACE
Amy Sanchez, PE	COR	USACE
Britt Crooks	Field Supverisor	Wilson Electric
Devon Jercinovic, PG, PMP	Project Manager	EA
Matt Bowman, PE, CCM	Construction Quality Manager	EA
Kevin McKeage, EI	Construction Quality Inspector	EA
Earl Morse, PG	Lift/Site Safety and Heath Officer	EA
Phillip Johnson	Project Manager	RMCI
Steve Moore	Lead Safety	RMCI
Tyler Curley, PE	Construction Manager	EA

SUBMITTALS

REVIEW SUBMITTALS AND/OR SUBMITTAL REGISTER. HAVE ALL SUBMITTALS BEEN APPROVED? ( ) YES (•) NO [Add] [Del]
(IF YES, MAINTAIN IN PRESENT CONDITION AS LONG AS POSSIBLE AND DESCRIBE LOCATION OF SAMPLE)

Seed Certification submittal outstanding. All other submittals complete.

ARE ALL MATERIALS ON HAND? ( ) YES (•) NO [Add] [Del]
IF NO, WHAT ITEMS ARE MISSING.

Materials will be delivered during the Mobilization and Site Preparation DFOW.

CHECK APPROVED SUBMITTALS AGAINST DELIVERED MATERIAL. (THIS SHOULD BE DONE AS MATERIAL ARRIVES.) [Add] [Del]
COMMENTS:

Checks will be performed upon receipt of materials and reported in the DQCRs.

MATERIAL STORAGE

ARE MATERIALS STORED PROPERLY? (•) YES ( ) NO [Add] [Del]
IF NO, WHAT ACTION IS TAKEN?

No materials currently stored onsite.

SPECIFICATIONS

REVIEW EACH PARAGRAPH OF SPECIFICATIONS. [Add] [Del]

Specifications for given materials were reviewed by all parties with the acceptance of submittals.

DISCUSS PROCEDURE FOR ACCOMPLISHING THE WORK. [Add] [Del]

RMCI will work with Wilson Electric to install the dual walled conveyance pipe into the pipeline trench (500 ft sections), horizontal drill runs, and vault installations. RMCI will coordinate with Wilson electric to install the electrical pad and replace VA fencing. All work will be performed in accordance with the specifications and design drawings.

CLARIFY ANY DIFFERENCES. [Add] [Del]

None

PRELIMINARY WORK & PERMITS

ENSURE PRELIMINARY WORK IS CORRECT AND PERMITS ARE ON FILE. [Add] [Del]
IF NOT, WHAT ACTION IS TAKEN?

All permits completed.

TESTING

IDENTIFY TEST TO BE PERFORMED, FREQUENCY, AND BY WHOM. [Add] [Del]

Test Weld (prior to installing pipe, RMCI); Weld Testing (during pipe installation, RMCI); Tightness Testing (during pipe installation, RMCI); Hydrostatic Testing (following installation of the pipe, RMCI); Pneumatic Testing (following installation of the pipe, RMCI); Valve Testing (following installation of the pipe, RMCI); Compaction Testing (during backfilling, RMCI)

WHEN REQUIRED? [Add] [Del]

Test welding will occur prior to installation. Weld testing and tightness testing will occur during installation. Hydrostatic, pneumatic, valve, and compaction testing will occur following installation of the dual walled conveyance line.

WHERE REQUIRED? [Add] [Del]

Test welding on the test pipe. Weld, tightness, hydrostatic, pneumatic, valve, and compaction testing on the length of the pipe.

REVIEW TESTING PLAN. [Add] [Del]

Included in design drawing review and specifications.

HAS TEST FACILITIES BEEN APPROVED? [Add] [Del]

N/A

PREPARATORY PHASE CHECKLIST

(CONTINUED ON SECOND PAGE)

SPEC SECTION	DATE
See Attached Table	Sep 19, 2017

CONTRACT NO	DEFINABLE FEATURE OF WORK	SCHEDULE ACT NO.	INDEX #
W912DR-12-D-0006, DM01	PIPELINE AND VAULT CONSTRUCTION	2	2

SAFETY

ACTIVITY HAZARD ANALYSIS APPROVED? REVIEW APPLICABLE PORTION OF EM 385-1-1. (●) YES ( ) NO [Add] [Del]

EA APP has been approved and is compliant with EM385-1-1. All personnel working on-site must submit signed documentation stating they reviewed the APP. Lift SSHO attended meeting and provided input on lift safety requirements during lifting operations.

MEETING COMMENTS

NAVY/ROICC COMMENTS DURING MEETING. [Add] [Del]

Safety, housekeeping, PPE, on-Base fire hydrant use, on-Base emergency phone number (505) 853-9111, public interaction, and clear lines of communication were discussed. USACE also identified the need for modified level D PPE (N95 dust mask) when excavating in the Zia Park neighborhood (soil contains trace chloridane).

OTHER ITEMS OR REMARKS

OTHER ITEMS OR REMARKS. [Add] [Del]

RMCI badges are complete and ready for pickup. EA is awaiting New Day's access agreement and USACE coordination with AFCEC and the VA regarding the electrical yard fencing. USACE to coordinate with AFCEC and VA regarding fencing. COA work order closeout could take additional time on top of completion of the punch list items.

QC MANAGER

Sep 26, 2017

DATE

PREPARATORY PHASE CHECKLIST

(CONTINUED ON SECOND PAGE)

SPEC SECTION	DATE
See Attached Table	Sep 19, 2017

CONTRACT NO	DEFINABLE FEATURE OF WORK	SCHEDULE ACT NO.	INDEX #
W912DR-12-D-0006, DM01	ELECTRICAL AND COMMUNICATIONS	3	3

PERSONNEL PRESENT — GOVERNMENT REP NOTIFIED 670 HOURS IN ADVANCE: (•) YES ( ) NO — Add / Del

NAME	POSITION	COMPANY/GOVERNMENT
Trent Simpler, PE	Project Manager	USACE
Carlos Salazar, PE	COR	USACE
Amy Sanchez, PE	COR	USACE
Britt Crooks	Field Supverisor	Wilson Electric
Devon Jercinovic, PG, PMP	Project Manager	EA
Matt Bowman, PE, CCM	Construction Quality Manager	EA
Kevin McKeage, EI	Construction Quality Inspector	EA
Earl Morse, PG	Lift/Site Safety and Heath Officer	EA
Phillip Johnson	Project Manager	RMCI
Steve Moore	Lead Safety	RMCI
Tyler Curley, PE	Construction Manager	EA

SUBMITTALS — REVIEW SUBMITTALS AND/OR SUBMITTAL REGISTER. HAVE ALL SUBMITTALS BEEN APPROVED? (IF YES, MAINTAIN IN PRESENT CONDITION AS LONG AS POSSIBLE AND DESCRIBE LOCATION OF SAMPLE) ( ) YES (•) NO — Add / Del

Transformer submittal outstanding. A stand in transformer will be borrowed from Kirtland AFB Exterior Electric until transformer is received. All other submittals complete.

ARE ALL MATERIALS ON HAND? IF NO, WHAT ITEMS ARE MISSING. ( ) YES (•) NO — Add / Del

All materials will be delivered immediately prior to installation to avoid storage security and potential damage from the elements.

CHECK APPROVED SUBMITTALS AGAINST DELIVERED MATERIAL. (THIS SHOULD BE DONE AS MATERIAL ARRIVES.) COMMENTS: — Add / Del

Checks will be performed upon receipt of materials and reported in the DQCR.

MATERIAL STORAGE — ARE MATERIALS STORED PROPERLY? IF NO, WHAT ACTION IS TAKEN? (•) YES ( ) NO — Add / Del

No materials currently stored onsite.

SPECIFICATIONS — REVIEW EACH PARAGRAPH OF SPECIFICATIONS. — Add / Del

Specifications for given materials were reviewed by all parties with the acceptance of submittals.

DISCUSS PROCEDURE FOR ACCOMPLISHING THE WORK. — Add / Del

Wilson Electric will work with RMCI to install conduit and conductors into the pipeline trench (500 ft sections) and horizontal drill runs. The VA electrical yard installation will also be coordinated with RMCI. All work will be performed in accordance with the specifications and design drawings.

CLARIFY ANY DIFFERENCES. — Add / Del

None

PRELIMINARY WORK & PERMITS — ENSURE PRELIMINARY WORK IS CORRECT AND PERMITS ARE ON FILE. IF NOT, WHAT ACTION IS TAKEN? — Add / Del

All permits completed.

TESTING — IDENTIFY TEST TO BE PERFORMED, FREQUENCY, AND BY WHOM. — Add / Del

VLF testing by Wilson Electric (or Wilson Electric's Subcontractor)

WHEN REQUIRED? — Add / Del

Prior to energizing

WHERE REQUIRED? — Add / Del

Three phase conductors between on Base sectionalizer and KAFB-106239

REVIEW TESTING PLAN. — Add / Del

Included in design drawing review

HAS TEST FACILITIES BEEN APPROVED? — Add / Del

N/A

SAFETY — ACTIVITY HAZARD ANALYSIS APPROVED? REVIEW APPLICABLE PORTION OF EM 385-1-1. (•) YES ( ) NO — Add / Del

PREPARATORY PHASE CHECKLIST

(CONTINUED ON SECOND PAGE)

SPEC SECTION	DATE
See Attached Table	Sep 19, 2017

CONTRACT NO	DEFINABLE FEATURE OF WORK	SCHEDULE ACT NO.	INDEX #
W912DR-12-D-0006, DM01	ELECTRICAL AND COMMUNICATIONS	3	3

EA APP has been approved and is compliant with EM385-1-1. All personnel working on-site must submit signed documentation stating they reviewed the APP.

MEETING COMMENTS — NAVY/ROICC COMMENTS DURING MEETING. [Add] [Del]

USACE requested a Pulling Plan from Wilson Electric.

OTHER ITEMS OR REMARKS — OTHER ITEMS OR REMARKS. [Add] [Del]

Britt Crooks indicated that #2 conductors may no longer meet Base requirements, but Wilson Electric will install as designed and accepted by USACE.

Sep 21, 2017

QC MANAGER — DATE

City of Albuquerque Project Number 586082

KAFB-106239 Conveyance Line Installation

Pre-Construction Meeting Agenda (Preparatory and Initial Phase Checklist Review)

Date: November 22, 2017
Time: 0900 MDT
Invited: USACE, EA, and Techsas

1. **Introductions**
    a. EA Roles
        i. SSHO Pool – Tyler Curley, PE; Earl Morse, PG; Peter Ferrari; Dustin Graves, PG, CHMM; Gary Desselle
        ii. CQM Pool – Kevin McKeage, EI; Tyler Curley, PE; Luke Rief, PE; Matt Bowman, PE, CCM
        iii. CM Pool – Tyler Curley, PE; Earl Morse, PG; Luke Rief, PE; Matt Bowman, PE, CCM
    b. Key Subcontractors
        i. Techsas
        ii. I&C Solutions

2. **Site Activities**
    a. Pump Install
    b. Instrumentation and Controls Install
    c. Process Integration
    d. Schedule of activities

3. **DFOW**
    a. Extraction Well Instrumentation

4. **Submittals (Preconstruction)**
    a. Remaining submittals (VFD)
    b. Expected delivery date and inspections of materials
    c. Materials storage

5. **Specifications**
    a. Procedures for accomplishing the DFOW
    b. Procedure compliance and punchout

6. **Preliminary Work and Permits -** Complete

7. **Testing**
    a. Testing to be performed and frequency
    b. Review testing from Specifications
    c. Workmanship – no sample required
    d. Coordination for line pressure testing

8. **Health and Safety**
    a. APP review and certifications for all on-site personnel

9. **Comments/Concerns**
    a. Safety is top priority
    b. Public should be directed to EA staff
    c. Badging in progress
    d. COA Work Order Closeout and Building Permit Inspection
    e. Others?

KAFB-106239 Conveyance Line

Pre-Construction Meeting Minutes

City of Albuquerque Project Number 586082

Date: November 22, 2017
Time: 900-0915 MDT
Attendees: List at end of minutes
Contract: W912DR-12-D-0006-DM01

Introductions - Introduction by all attendees and affiliation/roles were described. K. McKeage mentioned that Cascade Drilling and Rupert Plumbing were additional key contractors.

Site Activities and DFOWs – K. McKeage listed the site activities associated with the DFOW – Extraction Well Instrumentation. E. Butler listed the schedule for installing various components. Mobilization for the pump installation is to occur on 27NOV17 and installation will continue through 30NOV17. K. McKeage mentioned that coordination of pressure testing on the dual walled conveyance line will need to be performed to ensure that the pump is installed. T. Curley mentioned that this had already been worked out. Wellhead components are to be installed the week of 11DEC17, but may extend into the week of 18DEC17. E. Butler mentioned that all construction activities should be concluded by 22DEC17. T. Cleveland asked about install coordination with other site activities, such as the electrical DFOW, and if the pump would be tested via generator or permanent power. E. Butler responded that the intent was to

Submittals and Specifications

- T. Cleveland mentioned that he had just received the one remaining submittal for the VFD and would hopefully be able to review it by COB 22NOV17.
- K. McKeage confirmed that materials would be brought onsite for inspection and installation the day of their intended install.
- K. McKeage stated that EA's punch-out timeframe would likely extend to the week of 01JAN17, USACE punch-out would occur following EA's punch-out, and that the final walkthrough would be performed with USACE.

Preliminary Work and Permits and Testing

- K. McKeage confirmed that all preliminary work had been completed.

Testing

K. McKeage mentioned that testing would be performed within the specifications and that the majority of items would be tested during punch-out following programming updates. EA would

also provide I&C Solution's OATs sheets showing that required signals had been tested appropriately. A sample of work will not be required.

Health and Safety and Comments/Concerns

- K. McKeage stated that all key subcontractors had received an updated EA APP for review.
- K. McKeage reiterated that safety is the top priority, any member of the public should be directed toward EA staff.
- Techsas badge is in progress,
- K. McKeage and D. Jercinovic informed USACE that COA work order closeout could take additional time on top of completion of the punchlist items. C. Salazar indicated that USACE did not want to delay the installation or completion by contesting COA requests.

Action Items

1. USACE to complete VFD submittal review

PREPARATORY PHASE CHECKLIST

(CONTINUED ON SECOND PAGE)

SPEC SECTION	DATE
See Attached Table	Nov 22, 2017

CONTRACT NO	DEFINABLE FEATURE OF WORK	SCHEDULE ACT NO.	INDEX #
W912DR-12-D-0006, DM01	Pump Installation and Instrumentation	4	4

PERSONNEL PRESENT — GOVERNMENT REP NOTIFIED 20 HOURS IN ADVANCE: (•) YES ( ) NO — Add / Del

NAME	POSITION	COMPANY/GOVERNMENT
Todd Cleveland	COR Representative	USACE
Tyler Curley, P.E.	Construction Manager	EA
Kevin McKeage, E.I.	Field Construction Quality Manager	EA
Ed Butler	Construction Manager	Techsas

SUBMITTALS — REVIEW SUBMITTALS AND/OR SUBMITTAL REGISTER. HAVE ALL SUBMITTALS BEEN APPROVED? (IF YES, MAINTAIN IN PRESENT CONDITION AS LONG AS POSSIBLE AND DESCRIBE LOCATION OF SAMPLE) ( ) YES (•) NO — Add / Del

USACE is in progress of reviewing the final submittal (VFD).

ARE ALL MATERIALS ON HAND? IF NO, WHAT ITEMS ARE MISSING. (•) YES ( ) NO — Add / Del

Subcontractors will bring on-site as needed daily.

CHECK APPROVED SUBMITTALS AGAINST DELIVERED MATERIAL. (THIS SHOULD BE DONE AS MATERIAL ARRIVES.) COMMENTS: — Add / Del

Inspections will be performed as materials are delivered.

MATERIAL STORAGE — ARE MATERIALS STORED PROPERLY? IF NO, WHAT ACTION IS TAKEN? (•) YES ( ) NO — Add / Del

Materials will not be stored on-site prior to installation, they will be delivered as needed.

SPECIFICATIONS — REVIEW EACH PARAGRAPH OF SPECIFICATIONS. — Add / Del

Specifications for given materials were reviewed by all parties with the acceptance of submittals.

DISCUSS PROCEDURE FOR ACCOMPLISHING THE WORK. — Add / Del

Pump will be installed first by Cascade Drilling; wellhead components by Rupert Plumbing; and I&C Solutions will provide process integration once all items are installed.

CLARIFY ANY DIFFERENCES. — Add / Del

None

PRELIMINARY WORK & PERMITS — ENSURE PRELIMINARY WORK IS CORRECT AND PERMITS ARE ON FILE. IF NOT, WHAT ACTION IS TAKEN? — Add / Del

All preliminary work and permits have been completed.

TESTING — IDENTIFY TEST TO BE PERFORMED, FREQUENCY, AND BY WHOM. — Add / Del

Pump will be tested by Cascade Drilling, wellhead components by Rupert Plumbing, and Process Integration by I&C Solutions.

WHEN REQUIRED? — Add / Del

Following installation

WHERE REQUIRED? — Add / Del

At the wellhead and GWTS

REVIEW TESTING PLAN. — Add / Del

Plans for testing are included in specifications, and will be reviewed with subcontractors at time of testing.

HAS TEST FACILITIES BEEN APPROVED? — Add / Del

N/A

SAFETY — ACTIVITY HAZARD ANALYSIS APPROVED? REVIEW APPLICABLE PORTION OF EM 385-1-1. (•) YES ( ) NO — Add / Del

All subcontractors have a copy of EA's APP for review. EA's APP is compliant with EM385-1-1.

MEETING COMMENTS — NAVY/ROICC COMMENTS DURING MEETING. — Add / Del

Testing of the pump will occur with permanent power and not a generator.

OTHER ITEMS OR REMARKS — OTHER ITEMS OR REMARKS. — Add / Del

None

PREPARATORY PHASE CHECKLIST (CONTINUED ON SECOND PAGE)		SPEC SECTION	DATE
		See Attached Table	Nov 22, 2017
CONTRACT NO	DEFINABLE FEATURE OF WORK	SCHEDULE ACT NO.	INDEX #
W912DR-12-D-0006, DM01	Pump Installation and Instrumentation	4	4

QC MANAGER

Nov 22, 2017

DATE

KAFB-106239 Conveyance Line

Initial Phase Meeting Minutes

City of Albuquerque Project Number 586082

Date: September 22, 2017
Time: 1115-1130 MDT
Attendees: List at end of minutes
Contract: W912DR-12-D-0006-DM01

Introductions – Brief introduction between all attendees. K. McKeage began the meeting informing the attendees that the meeting structure would reflect the Initial Phase Checklist.

Procedure Compliance – P. Johnson listed the site activities and gave a timeline for their initiation as follows: Monday, Tuesday, Wednesday moving in heavy equipment and tools; Tuesday and Wednesday pipe delivery. The remainder of site mobilization activities to follow the schedule provided during the preconstruction meeting (installation of BMPs, Surveying, Utility Verification).

Preliminary Work – K. McKeage identified that all preliminary work except for receipt of the final signed copy of APP acknowledgement form had been completed.

Workmanship

- K. McKeage identified that material safety during delivery (e. g. dropping a pipe) as well as personnel safety with large equipment were the main workmanship concerns.
- K. McKeage stated that a sample panel or work sample is not required.

Resolution – No differences in status for any of the above items were acknowledged.

Check Safety

- K. McKeage reiterated that personnel safety was of top priority during site mobilization and preparation.
- A. Sanchez stated that in the event anyone were to enter the site that that they be directed to exit the work area and talk with EA staff.
- J. Patton mentioned that orange safety fences would be installed in addition to the Jersey barriers for site safety and security.

Other

- A. Sanchez requested that she be notified prior to initiation of the test welding (not part of this DFOW)
- A. Sanchez requested a copy of the specifications provided to RMCI.

Action Items

1. RMCI to provide EA with final signed copy of APP acknowledgement form.
2. EA to provide specifications to A. Sanchez with USACE.

LIST OF ATTENDEES

KAFB-106239 CONVEYANCE LINE INITIAL PHASE MEETING FOR MOBILITATION AND SITE PREPARATION

September 22, 2017

Participant	Invited	Attended	Phone Number	Email	Role
Amy Sanchez, PE – USACE	X	X	505-342-3234	Amy.E.Sanchez@usace.army.mil	COR
Phillip Johnson – RMCI	X	X	505-235-1850	pjohnson@rmciinc.com	Project Manager
Jerry Patton – RMCI	X	X	505-206-2312	jpatton@rmciinc.com	Site Foreman
Kevin McKeage, EI – EA	X	X	316-765-1486	kmckeage@eaest.com	Construction Quality Inspector

INITIAL PHASE CHECKLIST

SPEC SECTION	DATE
See Attached Table	Sep 19, 2017

CONTRACT NO	DEFINABLE FEATURE OF WORK	SCHEDULE ACT NO.	INDEX #
W912DR-12-D-0006, DM01	MOBILIZATION AND SITE PREPARATION	1	See Attached Table

PERSONNEL PRESENT — GOVERNMENT REP NOTIFIED 47 HOURS IN ADVANCE: (•) YES ( ) NO [Add] [Del]

NAME	POSITION	COMPANY/GOVERNMENT
Amy Sanchez, PE	COR	USACE
Kevin McKeage, EI	Construction Quality Inspector	EA
Phillip Johnson	Project Manager	RMCI
Jerry Patton	Site Foreman	RMCI

PROCEDURE COMPLIANCE — IDENTIFY FULL COMPLIANCE WITH PROCEDURES IDENTIFIED AT PREPARATORY, COORDINATE PLANS, SPECIFICATIONS AND SUBMITTALS [Add] [Del]

COMMENTS:

Compliance will be followed for site control and health and safety requirements per the preparatory meeting. No applicable plans, specifications or submittals.

PRELIMINARY WORK — ENSURE PRELIMINARY WORK IS COMPLETE AND CORRECT. IF NOT, WHAT ACTION IS TAKEN? [Add] [Del]

All preliminary work except for receipt of the final signed copy of APP acknowledgment form has been completed. RMCI will provide the final signed copy of APP acknowledgment form before proceeding with work.

WORKMANSHIP — ESTABLISH LEVEL OF WORKMANSHIP
WHERE IS WORK LOCATED? [Add] [Del]

Best practices for material and personnel safety were identified. Meeting held at future work site.

IS SAMPLE PANEL REQUIRED? ( ) YES (•) NO [Add] [Del]
WILL THE INITIAL WORK BE CONSIDERED A SAMPLE? ( ) YES (•) NO

(IF YES, MAINTAIN IN PRESENT CONDITION AS LONG AS POSSIBLE AND DESCRIBE LOCATION OF SAMPLE)

RESOLUTION — RESOLVE ANY DIFFERENCES. [Add] [Del]

COMMENTS:

No differences identified.

CHECK SAFETY — REVIEW JOB CONDITIONS USING EM 385-1-1 ACTIVITY HAZARD ANALYSIS AND MSDS [Add] [Del]

COMMENTS:

Health and safety identified as top priority for personnel conducting work. EA's Accident Prevention Plan, EM 385-1-1 compliant, will be followed. AHAs will be addressed during daily safety tailgate meetings before conducting work.

OTHER — OTHER ITEMS OR REMARKS [Add] [Del]

A. Sanchez requested that she be notified prior to initiation of the test welding (not part of this DFOW) and requested a copy of the specifications provided to RMCI. EA will provide the specifications to A. Sanchez following the meeting.

Sep 25, 2017

QC MANAGER DATE

KAFB-106239 Conveyance Line

Initial Phase Meeting Minutes

City of Albuquerque Project Number 586082

Date: October 03, 2017
Time: 0700-0720 MDT
Attendees: List at end of minutes
Contract: W912DR-12-D-0006-DM01

Introductions – Brief introduction between all attendees. K. McKeage began the meeting informing the attendees that the meeting structure would reflect the Initial Phase Checklist.

Procedure Compliance – K. McKeage reminded all present that both the DFOWs Pipeline and Vault Construction and Electrical and Communications will be completed in tandem in the same trench. K. McKeage mentioned that all materials delivered to the site were within specifications and accepted.

Preliminary Work – K. McKeage identified that all preliminary work except for receipt of the two outstanding submittals (seed certification for RMCI and transformer for Wilson Electric) and B. Crooks mentioned that the notification for acquisition of a temporary transformer from Base exterior electric was with USACE.

Workmanship

- K. McKeage identified that the successful test weld and bend tests met workmanship creteria. Additionally T. Curley, EA's site construction manager, would review each weld as it was made to ensure consistent workmanship.
- K. McKeage stated that a sample panel or work sample is not required.

Resolution – No differences in status for any of the above items were acknowledged.

Check Safety

- A. Sanchez inquired if the trenching activities were to exceed 5 feet in depth.
- J. Patton mentioned that the current plan was not to exceed 4 feet of trench depth and that horizontal drilling or additionally safety equipment (trench boxes) would be utilized if depths needed to exceed 5 feet.
- K. McKeage reiterated that personnel had acknowledged reading of EA's APP, EM385-1-1 compliant, and that safety certifications had been obtained from both RMCI and Wilson Electric.

Other

- B. Crooks and J Patton coordinated today's expected accivities including the preparation of conduit for horizontal drilling installation.

Action Items - None

INITIAL PHASE CHECKLIST

SPEC SECTION	DATE
See Attached Table	Oct 3, 2017

CONTRACT NO	DEFINABLE FEATURE OF WORK	SCHEDULE ACT NO.	INDEX #
W912DR-12-D-0006, DM01	Electrical and Communications	2	See Attached Table

PERSONNEL PRESENT — GOVERNMENT REP NOTIFIED 19 HOURS IN ADVANCE: (•) YES ( ) NO [Add] [Del]

NAME	POSITION	COMPANY/GOVERNMENT
Amy Sanchez, P.E.	COR	USACE
Jerry Patton	Site Foreman	RMCI
Britt Crooks	Onsite Supervisor	Wilson Electric
Kevin McKeage, EI	Construction Quality Inspector	EA
Tyler Curley, PE	Construction Manager	EA

PROCEDURE COMPLIANCE — IDENTIFY FULL COMPLIANCE WITH PROCEDURES IDENTIFIED AT PREPARATORY, COORDINATE PLANS, SPECIFICATIONS AND SUBMITTALS [Add] [Del]

COMMENTS:

Both RMCI and Wilson Electric understand and are willing to cooperate with each other working in a shared trench. All materials delivered to the the site thus far have been within specifications and accepted by the Construction Quality Inspector.

PRELIMINARY WORK — ENSURE PRELIMINARY WORK IS COMPLETE AND CORRECT. IF NOT, WHAT ACTION IS TAKEN? [Add] [Del]

Wilson Electric requires a transformer submittal. USACE will work with Base Exterior Electric to obtain a stand-in transformer, which Wilson electric and Exterior Electric have identified as an appropriate stand-in.

WORKMANSHIP — ESTABLISH LEVEL OF WORKMANSHIP WHERE IS WORK LOCATED? [Add] [Del]

Wilson Electric is aware of what the engineering drawings specify.

IS SAMPLE PANEL REQUIRED? ( ) YES (•) NO
WILL THE INITIAL WORK BE CONSIDERED A SAMPLE? ( ) YES (•) NO [Add] [Del]

(IF YES, MAINTAIN IN PRESENT CONDITION AS LONG AS POSSIBLE AND DESCRIBE LOCATION OF SAMPLE)

N/A

RESOLUTION — RESOLVE ANY DIFFERENCES. [Add] [Del]

COMMENTS:

None

CHECK SAFETY — REVIEW JOB CONDITIONS USING EM 385-1-1 ACTIVITY HAZARD ANALYSIS AND MSDS [Add] [Del]

COMMENTS:

Wilson Electric has submitted acknowledgment of review of EA's APP, an EM 385-1-1 compliant document.

OTHER — OTHER ITEMS OR REMARKS [Add] [Del]

None

QC MANAGER — DATE: Oct 3, 2017

INITIAL PHASE CHECKLIST

SPEC SECTION	DATE
See Attached Table	Oct 3, 2017

CONTRACT NO	DEFINABLE FEATURE OF WORK	SCHEDULE ACT NO.	INDEX #
W912DR-12-D-0006, DM01	PIPELINE AND VAULT CONSTRUCTION	2	See Attached Table

PERSONNEL PRESENT — GOVERNMENT REP NOTIFIED ____ HOURS IN ADVANCE: ( ) YES ( ) NO [Add] [Del]

NAME	POSITION	COMPANY/GOVERNMENT
Amy Sanchez, P.E.	COR	USACE
Jerry Patton	Site Foreman	RMCI
Britt Crooks	Onsite Supervisor	Wilson Electric
Kevin McKeage, EI	Construction Quality Inspector	EA
Tyler Curley, PE	Construction Manager	EA

PROCEDURE COMPLIANCE — IDENTIFY FULL COMPLIANCE WITH PROCEDURES IDENTIFIED AT PREPARATORY, COORDINATE PLANS, SPECIFICATIONS AND SUBMITTALS [Add] [Del]

COMMENTS:

Both RMCI and Wilson Electric understand and are willing to cooperate with each other working in a shared trench. All materials delivered to the the site thus far have been within specifications and accepted by the Construction Quality Inspector.

PRELIMINARY WORK — ENSURE PRELIMINARY WORK IS COMPLETE AND CORRECT. IF NOT, WHAT ACTION IS TAKEN? [Add] [Del]

RMCI needs to submit a seed certification submittal prior to site restoration

WORKMANSHIP — ESTABLISH LEVEL OF WORKMANSHIP
WHERE IS WORK LOCATED? [Add] [Del]

RMCI is aware of what the engineering drawings specify and the specifications identified in their contract.

IS SAMPLE PANEL REQUIRED? ( ) YES (•) NO [Add] [Del]
WILL THE INITIAL WORK BE CONSIDERED A SAMPLE? ( ) YES (•) NO

(IF YES, MAINTAIN IN PRESENT CONDITION AS LONG AS POSSIBLE AND DESCRIBE LOCATION OF SAMPLE)

N/A

RESOLUTION — RESOLVE ANY DIFFERENCES. [Add] [Del]

COMMENTS:

None

CHECK SAFETY — REVIEW JOB CONDITIONS USING EM 385-1-1 ACTIVITY HAZARD ANALYSIS AND MSDS [Add] [Del]

COMMENTS:

RMCI has submitted acknowledgment of review of EA's APP, an EM 385-1-1 compliant document.

OTHER — OTHER ITEMS OR REMARKS [Add] [Del]

None

Matt Burn

QC MANAGER — DATE: Oct 3, 2017

INITIAL PHASE CHECKLIST

SPEC SECTION	DATE
See Attached Table	Nov 22, 2017

CONTRACT NO	DEFINABLE FEATURE OF WORK	SCHEDULE ACT NO.	INDEX #
W912DR-12-D-0006, DM01	Pump Installation and Instrumentation	4	See Attached Table

PERSONNEL PRESENT — GOVERNMENT REP NOTIFIED 20 HOURS IN ADVANCE: (•) YES ( ) NO — Add / Del

NAME	POSITION	COMPANY/GOVERNMENT
Todd Cleveland	COR Representative	USACE
Tyler Curley, P.E.	Construction Manager	EA
Kevin McKeage, E.I.	Field Construction Quality Manager	EA
Ed Butler	Construction Manager	Techsas

PROCEDURE COMPLIANCE — IDENTIFY FULL COMPLIANCE WITH PROCEDURES IDENTIFIED AT PREPARATORY, COORDINATE PLANS, SPECIFICATIONS AND SUBMITTALS — Add / Del

COMMENTS:

Techsas will be coordinating with their subcontractors to ensure all procedures meet compliance.

PRELIMINARY WORK — ENSURE PRELIMINARY WORK IS COMPLETE AND CORRECT. IF NOT, WHAT ACTION IS TAKEN? — Add / Del

All preliminary work has been completed.

WORKMANSHIP — ESTABLISH LEVEL OF WORKMANSHIP
WHERE IS WORK LOCATED? — Add / Del

Level of workmanship should meet or exceed that already provided on other tasks performed by subcontractors. Work is located at the KAFB-106239 wellhead and GWTS.

IS SAMPLE PANEL REQUIRED? ( ) YES (•) NO
WILL THE INITIAL WORK BE CONSIDERED A SAMPLE? ( ) YES (•) NO
(IF YES, MAINTAIN IN PRESENT CONDITION AS LONG AS POSSIBLE AND DESCRIBE LOCATION OF SAMPLE) — Add / Del

N/A

RESOLUTION — RESOLVE ANY DIFFERENCES. — Add / Del

COMMENTS:

No differences.

CHECK SAFETY — REVIEW JOB CONDITIONS USING EM 385-1-1 ACTIVITY HAZARD ANALYSIS AND MSDS — Add / Del

COMMENTS:

All subcontractors have a copy of EA's APP for review. EA's APP is compliant with EM385-1-1. AHAs and MSDSs will be reviewed during daily safety briefings for which they are appropriate.

OTHER — OTHER ITEMS OR REMARKS — Add / Del

None

Nov 22, 2017

QC MANAGER — DATE

EA Engineering, Science, and Technology, Inc

Employee/Visitor Register and Safety Brief

Date: 07/21/17

Site Entry/Exit		Name (Printed)	Signature	Company
Time In	Time Out			
0945		Kevin McKenzie		EA
0945		Devon Jeschke		EA
9:45	1051	George Nemeth		Smith Engineering
9:50		Tyler Corley		EA
9:50		Phillip Johnson		RMCI
9151	1055	Scott Clark		USAF
10:00	1055	Amy Sanchez		USACE
1080	1040	ARLENE SANDOVAL	Arlene Sandoval (505 907-4575)	C.O.A asandoval@cabq.gov
10:02	10 40	Henry Blair		COA 203-7358 hblair@cabq.gov
10:10	1040	Muhammed Aleeb		COA madeeb@cabq.gov 505-250-2604

McKeage, Kevin

From: McKeage, Kevin
Sent: Tuesday, August 15, 2017 7:27 PM
To: 'Simpler, Trent SPA'; 'Dreeland, Linda SPA'; 'Sanchez, Amy E. SPA'; Salazar, Carlos F SPA; Phaneuf, Mark J SPA; CLARK, SCOTT C GS-12 USAF AFCEC/CZO; holly.ogrady@us.af.mil; 'LYNNES, KATHRYN D HQE USAF AFGSC 377 MSG/SAF/IEE'; brian.renaghan@us.af.mil
Cc: Jercinovic, Devon; Curley, Tyler
Subject: Kirtland BFF - 15AUG17 Daily Report - Ridgecrest Vegetation Removal

Issues Today:
EA remobilized to site following one-day suspension of work to allow additional time for AF outreach to community. However, resident (2811 Ridgecrest Drive SE) was very concerned about the tree clearing and entered part of work zone and had to be escorted outside of the area to answer her questions. Site supervisor provided her AF contact numbers to call.

Resolution of Issues:
AF personnel made calls to residents on Monday. On Tuesday, AF personnel made contact with the concerned resident and explained why the trees had to be removed. Work will continue, but further discussion with property owners was indicated.

Work performed today:
- Begin removing vegetation from east to west on the south side of Ridgecrest
- Began chipping small diameter vegetation
- Staged fire wood and unchipped vegetation next to the primitive road south of Ridgecrest

Percentage of vegetation removed along Ridgecrest to date: 20%

Work Planned for Wednesday 16AUG17:
- Continue removing and chipping vegetation, working from east to west toward well KAFB-106239

Regards,
Kevin McKeage
Engineer I

Cell: (316) 765-1486
Direct Dial: (505) 933-6417
Office: (505) 224-9013 Ext. 1517
Fax: (505) 224-9016
kmckeage@eaest.com

EA Engineering, Science, and Technology, Inc., PBC
320 Gold Ave, Suite. 1300
Albuquerque, NM 87102
www.eaest.com

Location: Ridgecrest Blvd SE
Description: Southeast End of Ridgecrest Prior to Clearing
Date: 15 August 2017 Direction: Southeast

Location: Ridgecrest Blvd SE
Description: Middle Section of Ridgecrest Prior to Clearing
Date: 15 August 2017 Direction: Southeast

Location: Ridgecrest Blvd SE
Description: Middle Section of Ridgecrest Following Clearing
Date: 15 August 2017 Direction: Southeast

Location: Ridgecrest Blvd SE
Description: Southeast End of Ridgecrest Following Clearing
Date: 15 August 2017 Direction: Northwest

McKeage, Kevin

From: McKeage, Kevin
Sent: Wednesday, August 16, 2017 8:36 PM
To: 'Simpler, Trent SPA'; 'Sanchez, Amy E. SPA'; 'Dreeland, Linda SPA'; Salazar, Carlos F SPA; Phaneuf, Mark J SPA; CLARK, SCOTT C GS-12 USAF AFCEC/CZO; holly.ogrady@us.af.mil; 'LYNNES, KATHRYN D HQE USAF AFGSC 377 MSG/SAF/IEE'; brian.renaghan@us.af.mil
Cc: Jercinovic, Devon; Curley, Tyler
Subject: Kirtland BFF - 16AUG17 Daily Report - Ridgecrest Vegetation Removal
Attachments: Photographic_log 08-16-17.pdf

Issues Today:
1.) Traffic sign was found to be misdirecting traffic at the corner of Louisiana Blvd and Ridgecrest Dr SE
2.) Chipper stopped working at the end of the day

Resolution of issues:
1.) Southwest Safety was notified and dispatched a crew to reorient the sign correctly
2.) Subcontractor will perform the required maintenance to repair the chipper before 09:00 hours on 17AUG17.

Work Performed Today:
- Cut and treat vegetation continuing from east to west along the southern edge of Ridgecrest Dr SE
- Continue chipping cut vegetation and staging fire wood

Percentage of vegetation removed to date: 40%

Work Planned for Thursday 17AUG17:
- Perform chipper maintenance and continue chipping cut vegetation
- Continue removing trees from east to west along the southern edge of Ridgecrest Dr SE

Regards,
Kevin McKeage
Engineer I

Cell: (316) 765-1486
Direct Dial: (505) 933-6417
Office: (505) 224-9013 Ext. 1517
Fax: (505) 224-9016
kmckeage@eaest.com

EA Engineering, Science, and Technology, Inc., PBC
320 Gold Ave, Suite. 1300
Albuquerque, NM 87102
www.eaest.com

Location: Ridgecrest Blvd SE
Description: Middle Section of Ridgecrest Prior to Clearing
Date: 16 August 2017 Direction: West

Location: Ridgecrest Blvd SE
Description: Middle Section of Ridgecrest Prior to Clearing
Date: 16 August 2017 Direction: South

Location: Ridgecrest Blvd SE
Description: Middle Section of Ridgecrest Following Clearing
Date: 16 August 2017 Direction: Southeast

Location: Ridgecrest Blvd SE
Description: Middle Section of Ridgecrest Following Clearing
Date: 16 August 2017 Direction: West

McKeage, Kevin

From: McKeage, Kevin
Sent: Thursday, August 17, 2017 7:14 PM
To: 'Simpler, Trent SPA'; 'Sanchez, Amy E. SPA'; Salazar, Carlos F SPA; Phaneuf, Mark J SPA; 'Dreeland, Linda SPA'; CLARK, SCOTT C GS-12 USAF AFCEC/CZO; holly.ogrady@us.af.mil; 'LYNNES, KATHRYN D HQE USAF AFGSC 377 MSG/SAF/IEE'; brian.renaghan@us.af.mil
Cc: Jercinovic, Devon; Curley, Tyler
Subject: Kirtland BFF - 17AUG17 Daily Report - Ridgecrest Vegetation Removal
Attachments: Photographic_log 08-17-17.pdf

Issues Today:
1.) A homeless man from the park north of Ridgecrest Dr SE made multiple attempts to enter the work zone and was escorted across the street each time to the park by field personnel. After the third attempt the man threatened bodily harm to field staff at approximately 10:20.
2.) Phyllis Galloway of 1424 Ridgecrest Place SE approached the work zone and spoke with field staff. She said that she was upset about the tree removal, but would be interested in obtaining a few pieces of wood from the field crew.

Resolution of Issues:
1.) Field staff made a 911 call (approximately 10:25) and stopped work. When additional staff arrived in the field the man remained in the park and appeared to be filming the work with a cell phone. As he was not trying to enter the work area, operations resumed and were shifted to maintain maximum distance between the park and field staff. Officers E. Padilla (badge #5731) and C. Duda (badge #5707) responded to the 911 call at approximately 11:49. When police arrived they conducted an interview with field staff and then went to speak with the homeless man. At approximately 12:05 the homeless man left the park and the officers returned to discuss their findings. The officers mentioned that they had encounter this individual in the past and requested that the man leave, and the man did not return during the remainder of the day. Since police did not perform an arrest of or issue a citation to the homeless man, no formal police report will be filed, but the call and followup notes will be recorded by the police department (CAD#172290520). Available caution tape was raised along the barricades to create a barrier and will continue to be used until the completion of field operations per the officers' suggestion.
2.) Ms. Galloway was provided with a construction notice flyer and encouraged her to call the contact numbers at the bottom of the flyer. Additional several pieces of wood were given to Ms. Galloway at the end of the day for her personal use.

Work Performed Today:
- Cut and treated vegetation along the south side of Ridgecrest Dr SE working from east to west
- Continued chipping cut vegetation and staging fire wood

Percentage of vegetation removed to date: 75%

Work Planned for Friday 18AUG17:
- Complete removing and chipping the remaining vegetation
- Remove vegetation inside lay down yard on the south side of Ridgecrest

Regards,
Kevin McKeage
Engineer I

Cell: (316) 765-1486

Direct Dial: (505) 933-6417
Office: (505) 224-9013 Ext. 1517
Fax: (505) 224-9016
kmckeage@eaest.com

EA Engineering, Science, and Technology, Inc., PBC
320 Gold Ave, Suite. 1300
Albuquerque, NM 87102
www.eaest.com

Location: Ridgecrest Blvd SE
Description: Middle Section of Ridgecrest Following Clearing
Date: 17 August 2017 Direction: Southeast

Location: Ridgecrest Blvd SE
Description: Middle Section of Ridgecrest Following Clearing
Date: 17 August 2017 Direction: West

McKeage, Kevin

From: McKeage, Kevin
Sent: Friday, August 18, 2017 9:22 PM
To: 'Simpler, Trent SPA'; 'Sanchez, Amy E. SPA'; Salazar, Carlos F SPA; Phaneuf, Mark J SPA; 'Dreeland, Linda SPA'; CLARK, SCOTT C GS-12 USAF AFCEC/CZO; holly.ogrady@us.af.mil; 'LYNNES, KATHRYN D HQE USAF AFGSC 377 MSG/SAF/IEE'; brian.renaghan@us.af.mil
Cc: Jercinovic, Devon; Curley, Tyler
Subject: Kirtland BFF - 18AUG17 Daily Report - Ridgecrest Vegetation Removal
Attachments: Photographic_log 08-18-17.pdf

Issues Today:
1) Troy Descheneau with Albuquerque Environmental Health Department arrived on site at 13:20 and left at approximately 13:40. He came by the site because his department had received a complaint from one of the residents (he did not have name or address) regarding dust from our activities and dust generated from sediments deposited near their home during run off events. He was perplexed walking the site with the EA supervisor as to how the complaint was tied specifically to the current on-site activities. He requested that we drive slowly in the work area to minimize dust and requested if we could implement our silt fence installation early in advance of pipeline construction. Mr. Descheneau indicated he would follow up the site inspection with an email to EA Project Manager named on permit. Anticipate Kirtland AFB will be copied on emails as the project owner.

2) At 16:40 Madina Holmes (not a resident of Siesta Hills) pulled over and asked field staff why they were clearing the vegetation. Ms. Holmes did not seem upset and was interested in obtaining more information on the project.

3) At 17:10 Caitlin Goodwyn, an employee of Newday, pulled over and asked field staff why they were clearing the vegetation. Ms. Goodwyn did not seem upset and was interested in obtaining more information on the project.

Resolution of Issues:
1) EA personnel will work with subcontractors to expedite construction of the silt fences along the construction corridor prior to construction activities the end of September to alleviate any additional sediment transfer during runoff events with the trees removed. EA will forward any emails received from Mr. Descheneau to the federal team.
2) Ms. Holmes was provided with a construction notice flyer and encouraged to call the contact numbers at the bottom of the flyer.
3) Ms. Goodwyn was provided with a construction notice flyer and encouraged to call the contact numbers at the bottom of the flyer.

Work Performed Today:
- Cut and treated vegetation along the south side of Ridgecrest Dr SE working from east to west and at the northeast corner of the work zone.
- Continued chipping cut vegetation and staging fire wood

Percentage of vegetation removed to date: 90%

Work Planned for Week of 21AUG17:
- Complete removing and chipping the remaining vegetation and debris and remove off-site
- Complete removal of vegetation inside lay down yard on the south side of Ridgecrest in preparation for delivery of conveyance line materials

Regards,

Kevin McKeage
Engineer I

Cell: (316) 765-1486
Direct Dial: (505) 933-6417
Office: (505) 224-9013 Ext. 1517
Fax: (505) 224-9016
kmckeage@eaest.com
:
EA Engineering, Science, and Technology, Inc., PBC
320 Gold Ave, Suite. 1300
Albuquerque, NM 87102
www.eaest.com

Location: Ridgecrest Blvd SE
Description: Northeast Section of Ridgecrest Prior to Clearing
Date: 18 August 2017 Direction: Southeast

Location: Ridgecrest Blvd SE
Description: Northeast Section of Ridgecrest Prior to Clearing
Date: 18 August 2017 Direction: Northwest

Location: Ridgecrest Blvd SE
Description: Northeast Section of Ridgecrest Following Clearing
Date: 18 August 2017 Direction: Northwest

Location: Ridgecrest Blvd SE
Description: South Side of Ridgecrest Following Clearing
Date: 18 August 2017 Direction: West

Location: Ridgecrest Blvd SE
Description: South Side of Ridgecrest Following Clearing
Date: 18 August 2017 Direction: South

McKeage, Kevin

From: McKeage, Kevin
Sent: Wednesday, August 23, 2017 8:03 PM
To: 'Simpler, Trent SPA'; 'Sanchez, Amy E. SPA'; 'Dreeland, Linda SPA'; Phaneuf, Mark J SPA; Salazar, Carlos F SPA; CLARK, SCOTT C GS-12 USAF AFCEC/CZO; holly.ogrady@us.af.mil; 'LYNNES, KATHRYN D HQE USAF AFGSC 377 MSG/SAF/IEE'; brian.renaghan@us.af.mil
Cc: Jercinovic, Devon; Curley, Tyler
Subject: Kirtland BFF - 23AUG17 Daily Report - Ridgecrest Vegetation Removal
Attachments: Photographic_log 08-23-17.pdf

Issues Today:
1.) Chainsaw stopped working shortly after beginning work

Resolution of issues:
1.) Subcontractor performed the required maintenance to repair the chainsaw and resumed work

Work Performed Today:
- Cut staged wood into firewood pieces
- Collected firewood pieces

Percentage of vegetation removed to date: 90%

Work Planned for Thursday 24AUG17:
- Continue cutting and collecting firewood from along the southern edge of Ridgecrest Dr SE
- Begin removing remaining small vegetation and applying herbicide

Regards,
Kevin McKeage
Engineer I

Cell: (316) 765-1486
Direct Dial: (505) 933-6417
Office: (505) 224-9013 Ext. 1517
Fax: (505) 224-9016
kmckeage@eaest.com

EA Engineering, Science, and Technology, Inc., PBC
320 Gold Ave, Suite. 1300
Albuquerque, NM 87102
www.eaest.com

Location: Ridgecrest Blvd SE
Description: Northwest Section of Ridgecrest Prior to Wood Being Cut
Date: 23 August 2017 Direction: Southeast

Location: Ridgecrest Blvd SE
Description: Northwest Section of Ridgecrest After Wood Being Cut and Collected
Date: 23 August 2017 Direction: Southeast

McKeage, Kevin

From: McKeage, Kevin
Sent: Thursday, August 24, 2017 7:26 PM
To: 'Simpler, Trent SPA'; 'Sanchez, Amy E. SPA'; Salazar, Carlos F SPA; Phaneuf, Mark J SPA; 'Dreeland, Linda SPA'; 'LYNNES, KATHRYN D HQE USAF AFGSC 377 MSG/SAF/IEE'; CLARK, SCOTT C GS-12 USAF AFCEC/CZO; holly.ogrady@us.af.mil; brian.renaghan@us.af.mil
Cc: Jercinovic, Devon; Curley, Tyler
Subject: Kirtland BFF - 24AUG17 Daily Report - Ridgecrest Vegetation Removal
Attachments: Photographic_log 08-24-17.pdf

Issues Today:
1.) At approximately 14:30 the crew witnessed lightning to their southeast.

Resolution of issues:
1.) Work was halted for thirty minutes and then resumed at 15:00 as no additional lightning was observed.

Work Performed Today:
- Cut staged wood into firewood pieces
- Collected firewood pieces

Percentage of vegetation removed to date: 90%

Work Planned for Friday 25AUG17:
- Continue cutting and collecting firewood from along the southern edge of Ridgecrest Dr SE
- Continue removing remaining small vegetation and applying herbicide

Regards,
Kevin McKeage
Engineer I

Cell: (316) 765-1486
Direct Dial: (505) 933-6417
Office: (505) 224-9013 Ext. 1517
Fax: (505) 224-9016
kmckeage@eaest.com

EA Engineering, Science, and Technology, Inc., PBC
320 Gold Ave, Suite. 1300
Albuquerque, NM 87102
www.eaest.com

Location: Ridgecrest Blvd SE
Description: Firewood piles south of Ridgecrest.
Date: 24 August 2017 Direction: West

Location: Ridgecrest Blvd SE
Description: Firewood piles south of Ridgecrest.
Date: 24 August 2017 Direction: West

McKeage, Kevin

From: McKeage, Kevin
Sent: Friday, August 25, 2017 7:12 PM
To: 'Simpler, Trent SPA'; 'Sanchez, Amy E. SPA'; 'Dreeland, Linda SPA'; Phaneuf, Mark J SPA; Salazar, Carlos F SPA; holly.ogrady@us.af.mil; CLARK, SCOTT C GS-12 USAF AFCEC/CZO; 'LYNNES, KATHRYN D HQE USAF AFGSC 377 MSG/SAF/IEE'
Cc: Jercinovic, Devon; Curley, Tyler
Subject: Kirtland BFF - 25AUG17 Daily Report - Ridgecrest Vegetation Removal
Attachments: Photographic_log 08-25-17.pdf

Issues Today:
None

Resolution of issues:
None

Work Performed Today:

- Completed cutting staged wood into firewood pieces
- Completed collection of firewood pieces

Percentage of vegetation removed to date: 90%

Work Planned for Monday 28AUG17:

- Continue removing remaining small vegetation and applying herbicide along Ridgecrest

Regards,
Kevin McKeage
Engineer I

Cell: (316) 765-1486
Direct Dial: (505) 933-6417
Office: (505) 224-9013 Ext. 1517
Fax: (505) 224-9016
kmckeage@eaest.com

EA Engineering, Science, and Technology, Inc., PBC
320 Gold Ave, Suite. 1300
Albuquerque, NM 87102
www.eaest.com

Location: Ridgecrest Blvd SE
Description: Firewood piles south of Ridgecrest.
Date: 25 August 2017 Direction: South

McKeage, Kevin

From: McKeage, Kevin
Sent: Monday, August 28, 2017 4:40 PM
To: 'Simpler, Trent SPA'; 'Sanchez, Amy E. SPA'; 'Dreeland, Linda SPA'; Phaneuf, Mark J SPA; Salazar, Carlos F SPA; holly.ogrady@us.af.mil; CLARK, SCOTT C GS-12 USAF AFCEC/CZO; 'Jessica Zencey'
Cc: Jercinovic, Devon; Curley, Tyler
Subject: Kirtland BFF - 28AUG17 Daily Report - Ridgecrest Vegetation Removal
Attachments: Photographic_Log 08-28-17.pdf

Issues Today:
None

Resolution of issues:
None

Work Performed Today:

- Removed remaining small vegetation and applying herbicide along Ridgecrest

Percentage of vegetation removed to date: 95%

Work Planned for Tuesday 29AUG17:

- Complete removing remaining small vegetation and applying herbicide along Ridgecrest

Regards,
Kevin McKeage, E.I.
Engineer

Cell: (316) 765-1486
Office: (505) 933-6417
kmckeage@eaest.com

EA Engineering, Science, and Technology, Inc., PBC
320 Gold Ave, Suite. 1300
Albuquerque, NM 87102
www.eaest.com

Location: Ridgecrest Blvd SE
Description: Southside of Ridgecrest Prior to Small Vegetation Clearing
Date: 28 August 2017 Direction: Southeast

Location: Ridgecrest Blvd SE
Description: Southside of Ridgecrest Prior to Small Vegetation Clearing
Date: 28 August 2017 Direction: Northwest

Location: Ridgecrest Blvd SE
Description: Southside of Ridgecrest Following to Small Vegetation Clearing
Date: 28 August 2017 Direction: Northwest

Location: Ridgecrest Blvd SE
Description: Southside of Ridgecrest Following to Small Vegetation Clearing
Date: 28 August 2017 Direction: Southeast

McKeage, Kevin

From: McKeage, Kevin
Sent: Tuesday, August 29, 2017 3:20 PM
To: 'Simpler, Trent SPA'; 'Sanchez, Amy E. SPA'; 'Dreeland, Linda SPA'; 'Phaneuf, Mark J SPA'; 'Salazar, Carlos F SPA'; 'holly.ogrady@us.af.mil'; 'CLARK, SCOTT C GS-12 USAF AFCEC/CZO'; 'Jessica Zencey'
Cc: Jercinovic, Devon; Curley, Tyler
Subject: Kirtland BFF - 29AUG17 Daily Report - Ridgecrest Vegetation Removal
Attachments: Photographic_Log 08-29-17.pdf

Issues Today:
None

Resolution of issues:
None

Work Performed Today:

- Removed remaining small vegetation and applying herbicide along Ridgecrest

Percentage of vegetation removed to date: 98%

Work Planned for Wednesday 30AUG17:

- Complete removing remaining small vegetation along Ridgecrest

Regards,
Kevin McKeage, E.I.
Engineer

Cell: (316) 765-1486
Office: (505) 933-6417
kmckeage@eaest.com

EA Engineering, Science, and Technology, Inc., PBC
320 Gold Ave, Suite. 1300
Albuquerque, NM 87102
www.eaest.com

Location: Ridgecrest Blvd SE
Description: Northside of Ridgecrest Prior to Small Vegetation Clearing
Date: 29 August 2017 Direction: South

Location: Ridgecrest Blvd SE
Description: Southside of Ridgecrest Prior to Small Vegetation Clearing
Date: 29 August 2017 Direction: Northwest

Location: Ridgecrest Blvd SE
Description: Northside of Ridgecrest Following to Small Vegetation Clearing
Date: 29 August 2017 Direction: Southeast

Location: Ridgecrest Blvd SE
Description: Southside of Ridgecrest Following to Small Vegetation Clearing
Date: 29 August 2017 Direction: Northwest

McKeage, Kevin

From: McKeage, Kevin
Sent: Wednesday, August 30, 2017 6:25 PM
To: 'Simpler, Trent SPA'; 'Sanchez, Amy E. SPA'; Salazar, Carlos F SPA; Phaneuf, Mark J SPA; 'Dreeland, Linda SPA'; holly.ogrady@us.af.mil; CLARK, SCOTT C GS-12 USAF AFCEC/CZO; 'ZENCEY, JESSICA A GS-07 USAF AFGSC 728 AMS/CCS'; brian.renaghan@us.af.mil
Cc: Jercinovic, Devon; Curley, Tyler
Subject: Kirtland BFF - 30AUG17 Daily Report - Ridgecrest Vegetation Removal
Attachments: Photographic_log 08-30-17.pdf

Issues Today:
Yesterday, after daily operations were conducted, a thunderstorm caused flooding at the site. Sediment and vegetation cuttings were transported by runoff generated from the VA yard running through to the COA Right of way and deposited in the right-of-way, including both sides of the street. Flooding and sediment disposition from non-project source areas was observed and photographed on San Pedro, Ridgecrest, and Louisiana.

Resolution of issues:
Sediment and small vegetation cuttings were removed from the roadway (so they could not be transported by surface flow) and 300 feet of 4-inch wattles were installed along Ridgecrest Drive perpendicular to the existing track out pad that leads from Ridgecrest to the VA property. A gully begins on VA property and runs east along the track out pad. The wattles were installed to reduce the VA runoff velocity prior to entering the street, but the wattles are a minimal solution and will not address large precipitation events during the remainder of the monsoon season. EA staff removed all sediment and debris from the street in the area immediately in front of the gully and track out pad (about 75 feet of linear roadway).

Work Performed Today:
- Removed remaining small vegetation and applying herbicide along Ridgecrest
- Removed remaining chip piles

Percentage of vegetation removed to date: 99%

Work Planned for Thursday 31AUG17:
- Complete removing remaining small vegetation along Ridgecrest

Regards,
Kevin McKeage, E.I.
Engineer
Cell: (316) 765-1486
Office: (505) 933-6417
kmckeage@eaest.com
EA Engineering, Science, and Technology, Inc., PBC
320 Gold Ave, Suite. 1300
Albuquerque, NM 87102
www.eaest.com

Kevin McKeage
Engineer I

Cell: (316) 765-1486
Direct Dial: (505) 933-6417
Office: (505) 224-9013 Ext. 1517
Fax: (505) 224-9016
kmckeage@eaest.com

EA Engineering, Science, and Technology, Inc., PBC
320 Gold Ave, Suite. 1300
Albuquerque, NM 87102
www.eaest.com

Location: Ridgecrest Blvd SE
Description: Chip piles south of Ridgecrest.
Date: 30 August 2017 Direction: South

Location: Ridgecrest Blvd SE
Description: Area where chip piles south of Ridgecrest were removed.
Date: 30 August 2017 Direction: South

Location: Ridgecrest Blvd SE
Description: Sediment along Ridgecrest prior to clean up.
Date: 30 August 2017 Direction: South

Location: Ridgecrest Blvd SE
Description: Sediment along Ridgecrest prior to clean up.
Date: 30 August 2017 Direction: West

Location: Ridgecrest Blvd SE
Description: Sediment cleared and wattles placed south of Ridgecrest.
Date: 30 August 2017 Direction: Southeast

Location: Ridgecrest Blvd SE
Description: Sediment cleared and wattles placed south of Ridgecrest.
Date: 30 August 2017 Direction: West

Location: Ridgecrest Blvd SE
Description: Remaining vegetation to be cleared south of Ridgecrest.
Date: 30 August 2017 Direction: Southeast

McKeage, Kevin

From: McKeage, Kevin
Sent: Thursday, August 31, 2017 4:18 PM
To: 'Simpler, Trent SPA'; 'Sanchez, Amy E. SPA'; Salazar, Carlos F SPA; Phaneuf, Mark J SPA; 'Dreeland, Linda SPA'; holly.ogrady@us.af.mil; CLARK, SCOTT C GS-12 USAF AFCEC/CZO; 'ZENCEY, JESSICA A GS-07 USAF AFGSC 728 AMS/CCS'
Cc: Jercinovic, Devon; Curley, Tyler
Subject: Kirtland BFF - 31AUG17 Daily Report - Ridgecrest Vegetation Removal
Attachments: Photographic_Log 08-31-17.pdf

Issues Today:
None

Resolution of issues:
None

Work Performed Today:

- Removed remaining small vegetation

Percentage of vegetation removed to date: 100%

Work Planned for Friday 01SEP17:

- Complete applying herbicide along Ridgecrest

Regards,
Kevin McKeage, E.I.
Engineer
Cell: (316) 765-1486
Office: (505) 933-6417
kmckeage@eaest.com
EA Engineering, Science, and Technology, Inc., PBC
320 Gold Ave, Suite. 1300
Albuquerque, NM 87102
www.eaest.com

Location: Ridgecrest Blvd SE
Description: Southside of Ridgecrest Following Small Vegetation Clearing
Date: 31 August 2017 Direction: Northwest

Location: Ridgecrest Blvd SE
Description: Southside of Ridgecrest Following Small Vegetation Clearing
Date: 31 August 2017 Direction: Southeast

McKeage, Kevin

From: McKeage, Kevin
Sent: Friday, September 01, 2017 2:18 PM
To: 'Simpler, Trent SPA'; 'Sanchez, Amy E. SPA'; 'Salazar, Carlos F SPA'; 'Phaneuf, Mark J SPA'; 'Dreeland, Linda SPA'; 'holly.ogrady@us.af.mil'; 'CLARK, SCOTT C GS-12 USAF AFCEC/CZO'; 'ZENCEY, JESSICA A GS-07 USAF AFGSC 728 AMS/CCS'
Cc: Jercinovic, Devon; Curley, Tyler
Subject: Kirtland BFF - 01SEP17 Daily Report - Ridgecrest Vegetation Removal
Attachments: Photographic_Log 09-01-17.pdf

Issues Today:
None

Resolution of issues:
None

Work Performed Today:

- Completed applying herbicide along Ridgecrest

Percentage of vegetation removed to date: 100%

Vegetation Removal and Herbicide Application have been completed.

Regards,
Kevin McKeage, E.I.
Engineer
Cell: (316) 765-1486
Office: (505) 933-6417
kmckeage@eaest.com
EA Engineering, Science, and Technology, Inc., PBC
320 Gold Ave, Suite. 1300
Albuquerque, NM 87102
www.eaest.com

Location: Ridgecrest Blvd SE
Description: Northside of Ridgecrest Following Herbicide Application
Date: 1 September 2017 Direction: Northwest

Location: Ridgecrest Blvd SE
Description: Southside of Ridgecrest Following Herbicide Application
Date: 1 September 2017 Direction: Northwest

Location: Ridgecrest Blvd SE
Description: Southside of Ridgecrest Following Herbicide Application
Date: 1 September 2017 Direction: Northwest

EA Engineering, Science, and Technology, Inc

Employee/Visitor Register and Safety Brief

Date: 09/13/17

Site Entry/Exit		Name (Printed)	Signature	Company
Time In	Time Out			
0845		T. Curley		EA
0845		Phillip Johnson		RMCI
0845		Kevin McKenzie		EA
0845		Devon Jercinovic		EA
09:00		Britt Crooks		Wilson
0900		Earl Morse		EA
0900		Matthew Walstrom		Wilson

From:	Curley, Tyler
To:	"Trent.Simpler@usace.army.mil"; "Amy.E.Sanchez@usace.army.mil"; "Mark.J.Phaneuf@usace.army.mil"; "Linda.Dreeland@usace.army.mil"; "Carlos.F.Salazar@usace.army.mil"
Cc:	Jercinovic, Devon; McKeage, Kevin
Subject:	Activity Report for KAFB Well 106239 Conveyance Line Installation 26n September 2017
Date:	Tuesday, September 26, 2017 7:52:01 PM
Attachments:	Photos 9-26-17.pdf 001 CQM Report 26SEP17.pdf Daily Field Activities Summary Report.pdf

---

Issues Today 26 Sept 2017:

- None

Resolution of Issues:

- NA

Work Performed Today:

- RMCI transported the following equipment onto the site:
  - Completed the transportation of the jersey barriers
  - Light plant
  - Conex storage container
  - HDPE fusion welders
  - Roller bucket for the excavator
  - Water truck
- The leak detection system was delivered to the site and was accepted by EA
- EA, USACE, & AFCEC met with the VA to discuss the installation of the electrical pad, the following are the salient points:
  - Installation of the pad and fencing should not require the remove of existing trees
  - The access gate to the pad will be moved to the southwest corner to avoid existing trees
  - Access during pad installation shall be obtained by removing a small length of chain link fencing along the eastern edge of the parking lot, all fencing shall be reinstalled at the end of each day

Installation Completion to Date: 0%

Work Planned for Wednesday 27 Sept 2017:

- RMCI will transport the following equipment onto the site:
  - Backhoe
- The conveyance line pipe is scheduled to be delivered to the laydown yard
- Begin stump removal
- Begin placing the jersey barriers and perform general set up

Please let me know if you need additional information.

Tyler Curley, P.E.
EA Engineering, Science, and Technology, Inc., PBC
320 Gold Avenue, SW Suite 1300
Albuquerque, NM 87120

(505) 715-4422 work
(719) 688-9558 cell
tcurley@eaest.com

DAILY FIELD ACTIVITIES SUMMARY REPORT			
PROJECT NAME: KAFB well 106239 Conveyance Line Install			
Date and Day: 9-25-17	Time Shift Beginning: 0700		Time Shift Ending:
Project Number: 62599 DM01			Contract/Task Order No.:
Client: USACE			Report By:: Tyler Curley
Contractor(s): RMCI, Wilson			Project Manager: Devon Jerchovic
Design Manager:			Oversight Manager: Tyler Curley
Design Engineer:			Site Engineer: Tyler Curley
Weather: Sunny, 70°F			Logbook Number:
Personnel Onsite	**Name**	**Affiliation**	**Reason for Being Onsite**
EA: Tyler Curley		EA	Oversight
Contractors: (Include type of equipment and number of personnel)	RMCI, Wilson		Conveyance line Install
Other/Visitors:			

Work Performed

Time and Location Health and Safety Toolbox Meeting Conducted:
Meeting Topics:
Activity Hazard Analyses Reviewed:

PLANNED ACTIVITIES:

Site mobilization + prep

COMPLETED ACTIVITIES:

Transported the following equipment

- Load
- Excavator
- Jersey Barriers
- Traffic plan
- Steel plate

MATERIAL DELIVERIES:

None

CONSTRUCTION QUALITY CONTROL ACTIVITIES OR SAMPLES COLLECTED:

None

OBSERVATIONS OR POSSIBLE VARIATIONS FROM SPECIFICATIONS:

None

VOLVO

KOMATSU

KOMATSU

EA Engineering, Science, and Technology, Inc

Employee/Visitor Register and Safety Brief

Date: 9-25-17

Site Entry/Exit		Name (Printed)	Signature	Company
Time In	Time Out			
06:50	1655	Tyler Curley		EA
07:40	1655	Jeremy Parton		RMCI
7:00	12:00	ED Hyde		RMCI
8:30	0930	Britt Crooks		Wilson Elec
8:33	10:40	Phillip Johnson		RMCI
8:35	1655	Robert BeBault		RMCI
9:25	1655	Felipe L.		RMCI
9:35	1655	Monte Leidig		RMCI
11:30	1730	Marcus Chastain		Southwest

EA ENGINEERING, SCIENCE AND TECHNOLOGY, INC.
SAFETY MEETING REPORT

Date: 9-25-17	**Time:** 0945	**Duration of meeting:** 15 min	**Project #** 68SCADMC1
Location: KAFB Well 166739		**Task:** Conveyance Line Install	

Type of meeting: X **Daily** ____ **Weekly** ____ **Monthly** ____ **Other:** _____

Items/Issues discussed:

1. Slips, trips, falls
2. Hospital route
3. tight working spaces
4. Exclusion zone + fencing
5. Proper PPE

Attach minutes of safety meeting if taken.

Safety questions/issues raised:	Actions/Follow-up needed:
1. Smoking areas	
2.	
3.	
4.	
5.	
6.	

Remarks: AMCI will provide break areas

Meeting conducted by:

Tyler Curley

EA Engineering, Science, and Technology, Inc.

DAILY SAFETY INSPECTION CHECKLIST
(TO BE COMPLETED EACH DAY OF CONSTRUCTION OR HTRW SITE ACTIVITIES)

Site: KAFB Well 106239
Location: Ridgecrest
Project No.: 62599 DM01
Client: USACE

Prepared by SSHO: Tyler Curley
Project Manager: Deven Jercinovic
Date : 9-25-17

Rating	Y	N	N/A	Comments/Immediate Corrective Action[1]
Accident Prevention Plan (APP) and Site Safety and Health Plan (SSHP) General Requirements				
Are there new onsite personnel? • Did they receive pre-entry briefing and are their names recorded in field logbook or daily log? • Was the USACE PM made aware of the new personnel. • Required training and medical surveillance documentation received (e.g., 40-hr, 8 hr, etc.)?	✓			
Did personnel sign in/out of site?	✓			
Daily tailgate safety meetings conducted and documented?	✓			
Were new activities performed today? Were hazards identified, discussed during the daily safety tailgate, and incorporated into revised APP/SSHP?	✓			
New materials brought on site? MSDSs available?	✓			
Exclusion (EZ), Contamination Reduction (CRZ), and Support Zones (SZ) delineated and enforced?	✓			
General housekeeping measures in place to prevent hazards?	✓			
Emergency Planning				
Were there any changes to emergency contact names, telephone numbers, or hospital? If so, were site personnel made aware and was information distributed/reposted.		✓		
Adequate safety equipment inventory available?	✓			
Fire extinguisher available (monthly inspection of extinguisher will suffice)	✓			
Eyewash station(s) functioning and in place (weekly inspection of eye wash station will suffice)?	✓			
First aid supplies available (weekly inspection of first aid kit will suffice)?	✓			
Communication equipment readily available for emergencies?	✓			
Any reported accidents/incidents at this site? If so, were accident reporting procedures followed?		✓		
Air Monitoring				
Monitoring equipment specified in SSHP available and in working order? Air monitoring instrumentation for this site includes – check each if required/on site, note deficiencies in comments: • Combustible gas meter • Organic vapor analyzer • Contaminant specific analyzer for benzene (if total organic vapor concentrations exceed 0.5 ppm)	✓			
Monitoring equipment calibrated and calibration records	✓			

Y = Satisfactory or Yes; N = Unsatisfactory or No, N/A = Not applicable

Rating	Y	N	N/A	Comments/Immediate Corrective Action[1]
available?				
Environmental and personnel monitoring performed as specified in SSHP?	✓			
PPE				
Proper dermal protection worn by EA and subcontracted employees when handling/ contacting hazardous chemicals or contaminated environmental media?	✓			
Required PPE (hard hats, safety boots / shoes, eye protection with side shields, hearing protection) being worn by EA and subcontracted employees?	✓			
PPE inspection completed by SSHO?	✓			
Drill Rig Operations				
Daily rig inspection completed? Any equipment problems?	✓			
Drill rigs/elevated equipment maintaining minimum 10-ft distance from energized (50 kV) overhead power lines?	✓			
Investigation-derived Waste (IDW)				
Wastes properly staged, secured, and labeled at end of day?			✓	

Additional Comments:

Site Safety and Health Officer's Signature

9-25-17

Date

[1]If a deficiency is noted that cannot be immediately corrected, the SSHO will monitor the progress in correcting the deficiency and will document following:

- Date the deficiency was identified
- Description of the deficiency
- Name of the person responsible for correcting the deficiency
- Projected date of correction
- Actual date of correction.

HEALTH AND SAFETY ACTIVITY REPORT

Site: KAFB Well 106239 Location: Ridgecrest Ave

Weather Cond.: Sunny, 70°F Onsite Hours: From 0700 To _____

Changes in PPE Levels[1]	Work Operations	Reasons for Change
None		

Site Safety and Health Plan Violations	Corrective Action Specified	Corrective Action Taken [2](yes/no)
None		

Observations and Comments:

Completed by: Tyler Curley Date: 9-25-17
Site Health and Safety Supervisor

[1]Only SSHO may change PPE levels, using only criteria specified in APP/SSHP.
[2]If a deficiency is noted that cannot be immediately corrected, the SSHO will monitor the progress in correcting the deficiency and will document following:

- Date the deficiency was identified
- Description of the deficiency
- Name of the person responsible for correcting the deficiency
- Projected date of correction
- Actual date of correction.

EA Engineering, Science, and Technology, Inc.

INITIAL SAFETY INSPECTION CHECKLIST
(TO BE COMPLETED FIRST DAY OF SITE ACTIVITIES)

Site: KAFB Well 106239
Location: Ridgecrest
Project No.: 62599DM01
Client: USACE

Prepared by SSHO: Tyler Curley
Project Manager: Devon Jercinovic
Date: 9-25-17

Rating	S	U	N/A	Comments/Immediate Corrective Action[1]
Accident Prevention Plan (APP) and Site Safety and Health Plan (SSHP) General Requirements				
Was a pre-entry safety briefing conducted? If so, did it include the following: • Site personnel and roles and authority to stop work? • Competent person(s) for identifying hazards? • Disclosure of potential hazards? • Emergency response procedures including rally point, contacts, location and directions of nearest medical support (hospital)? • Use of fire extinguishers • Vehicle rules/regulations? • Equipment to be used and those personnel qualified to use the equipment? • Methods of decontamination? • Storing/staging of wastes and materials? • Location/use of Material Safety Data Sheets (MSDS)? • Site control, including requirements for documenting entry into the site and procedures for entry and exit into work zones? • Task specific personal protective equipment (PPE) requirements? • Applicable standard operating procedures? • Environmental monitoring requirements and action levels? • Responsibilities for safety of personnel/property? • Safe work practices? • Procedures for maintaining personnel and site sanitation?	✓			
Approved APP/SSHP on site?	✓			
APP/SSHP compliance agreement form signed by onsite personnel, including subcontractors?	✓			
New activities or hazards identified and incorporated into revised APP/SSHP?		✓		
Names of onsite personnel recorded on site sign in sheet?	✓			
Applicable MSDSs on site or available?	✓			
Hazard labeling practices currently being used?	✓			
Records of daily inspections available for review?	✓			
Daily tailgate safety meetings conducted and documented?	✓			
Onsite personnel meet SSHP requirements for medical examinations, fit testing, and training (including subcontractors)?				
Documentation of training, medical examinations, and fit tests available from employer (as applicable)?	✓			
Compliance with specified safe work practices?	✓			
Exclusion (EZ), Contamination Reduction (CRZ), and Support	✓			

S = Satisfactory; U = Unsatisfactory, N/A = Not applicable

Rating	S	U	N/A	Comments/Immediate Corrective Action[1]
Zones (SZ) delineated and enforced?	✓			
Windsock, flag, or ribbons in place to indicate wind direction?		✓		
SZ located upwind from EZ and CRZ, as practicable?			✓	
Emergency Planning				
Emergency telephone numbers posted?	✓			
Emergency telephone numbers up to date?	✓			
Emergency route to hospital posted?	✓			
Local emergency providers notified of site activities?				
Fire extinguisher on site, of adequate size, and inspected within past month?	✓			
Review weather emergency procedures?	✓			
Adequate safety equipment inventory available?	✓			
First aid provider and first aid supplies available?	✓			
Eyewash station(s) functioning and in place?	✓			
Communication equipment readily available for emergencies?	✓			
Any reported accidents/incidents at this site? If so, are the accident/incident reports available for review?		✓		
Air Monitoring				
Monitoring equipment specified in SSHP available and in working order (See Instrumentation list below)?	✓			
Monitoring equipment calibrated and calibration records available?	✓			
Personnel know how to operate monitoring equipment and equipment manuals available on site?	✓			
Environmental and personnel monitoring performed as specified in SSHP?	✓			
Air monitoring instrumentation includes: • Combustible gas meter? • Organic vapor analyzer?				Dust meter
PPE (SSHO to enforce PPE requirements for EA and subcontractor employess)				
Proper dermal protection worn when handling/ contacting hazardous chemicals or contaminated environmental media?	✓			
Required PPE (hard hats, safety boots / shoes, eye protection with side shields) being worn?	✓			
PPE inspection completed by SSHO?	✓			
Hearing protection available? Worn when required?	✓			
Heavy Equipment Operations				
Equipment operators experienced/properly trained?	✓			
Dust control measures implemented in EZ, as necessary?	✓			
Equipment regularly inspected and maintained?	✓			
Utility lines located and marked prior to construction activities?	✓			
Clearance/digging permits kept onsite and available for review?	✓			
Drill rigs/elevated equipment maintaining minimum 10-ft distance from energized (50 kV) overhead power lines?	✓			
When backing a vehicle up is a spotter used?	✓			
Supplies				

Rating	S	U	N/A	Comments/Immediate Corrective Action[1]
Decontamination equipment and supplies on site?			✓	
Fire extinguishers (functioning, inspected, and in field vehicles)?	✓			
Spill cleanup supplies on site?	✓			
Investigation-derived Waste (IDW)				
Wastes properly disposed of?			✓	
Designated location for drummed IDW?			✓	
IDW containers properly labeled?			✓	

Additional Comments:

Site Safety and Health Officer's Signature

9-25-17

Date

[1]If a deficiency is noted that cannot be immediately corrected, the SSHO will monitor the progress in correcting the deficiency and will document following:

- Date the deficiency was identified
- Description of the deficiency
- Name of the person responsible for correcting the deficiency
- Projected date of correction
- Actual date of correction.

ENVIRONMENTAL MONITORING RECORD

SITE: KAFB-106239 Conveyance Line Installation

PROJECT NO.: 62599DM01

INSTRUMENT: Quest Noise Pro NXH 050017 / Thermo Dust Monitor #5564

Time	Monitoring Location	Reading (dB / mg/M³)	Corrective Action Taken[a]
1305	Sta 1+00	65.0 / 0.010	
1308	Sta 2+50	71.2 / 0.011	
1311	sta 5+00	65.0 / 0.009	
1314	Sta 7+50	65.0 / 0.008	
1317	Sta 10+00	66.1 / 0.009	
1320	Sta 12+50	65.9 / 0.012	
1449	Sta 15+00	67.5 / 0.015	
1447	Sta 17+50	65.2 / 0.013	
1445	Sta 20+00	70.0 / 0.011	
1443	Sta 22+50	66.4 / 0.016	
1440	Sta ~~25+00~~ 25+50	68.3 / 0.010	

Comments: N = North, E = East, S = South, W = West

All reading are from the North side of Ridgecrest Dr

(a) Corrective actions taken must be documented whenever readings at or above action levels are reached. Monitoring equipment and action levels are specified in Section 9.33 of the Accident Prevention Plan.

Recorded By: Tyler Curley
Site Health & Safety Officer

Date: 9-25-17

From:	Curley, Tyler
To:	"Trent.Simpler@usace.army.mil"; "Amy.E.Sanchez@usace.army.mil"; "Mark.J.Phaneuf@usace.army.mil"; "Linda.Dreeland@usace.army.mil"; "Carlos.F.Salazar@usace.army.mil"
Cc:	Jercinovic, Devon; McKeage, Kevin
Subject:	Activity Report for KAFB Well 106239 Conveyance Line Installation 26n September 2017
Date:	Tuesday, September 26, 2017 7:52:01 PM
Attachments:	Photos 9-26-17.pdf 001 CQM Report 26SEP17.pdf Daily Field Activities Summary Report.pdf

---

Issues Today 26 Sept 2017:

- None

Resolution of Issues:

- NA

Work Performed Today:

- RMCI transported the following equipment onto the site:
  - Completed the transportation of the jersey barriers
  - Light plant
  - Conex storage container
  - HDPE fusion welders
  - Roller bucket for the excavator
  - Water truck
- The leak detection system was delivered to the site and was accepted by EA
- EA, USACE, & AFCEC met with the VA to discuss the installation of the electrical pad, the following are the salient points:
  - Installation of the pad and fencing should not require the remove of existing trees
  - The access gate to the pad will be moved to the southwest corner to avoid existing trees
  - Access during pad installation shall be obtained by removing a small length of chain link fencing along the eastern edge of the parking lot, all fencing shall be reinstalled at the end of each day

Installation Completion to Date: 0%

Work Planned for Wednesday 27 Sept 2017:

- RMCI will transport the following equipment onto the site:
  - Backhoe
- The conveyance line pipe is scheduled to be delivered to the laydown yard
- Begin stump removal
- Begin placing the jersey barriers and perform general set up

Please let me know if you need additional information.

Tyler Curley, P.E.
EA Engineering, Science, and Technology, Inc., PBC
320 Gold Avenue, SW Suite 1300
Albuquerque, NM 87120

(505) 715-4422 work
(719) 688-9558 cell
tcurley@eaest.com

DAILY FIELD ACTIVITIES SUMMARY REPORT			
PROJECT NAME:			
Date and Day: 9-26-17	Time Shift Beginning:0700		Time Shift Ending: 1530
Project Number: 62599DM01			Contract/Task Order No.:
Client: USACE			Report By: Tyler Curley
Contractor(s): RMCI			Project Manager: Devon Jercinovic
Design Manager:			Oversight Manager: Tyler Curley
Design Engineer: George Nemeth			Site Engineer: Tyler Curley
Weather: Sunny 70° F			Logbook Number: NA
Personnel Onsite	**Name**	**Affiliation**	**Reason for Being Onsite**
EA:	Tyler Curley Earl Morse Kevin McKeage Pete Ferarri	EA	Construction/safety oversite Construction/safety oversite CQM Field support
USACE	Trent Simpler Amy Sanchez		Construction meeting
AFCEC	Holly O'Grady		Construction Meeting
VA	Brian Price Coy Webb		Construction Meeting
Contractors: (Include type of equipment and number of personnel)	Ed Hyde Jerry Patton Phillip Johnson Jesus Moya Robert DeBault Monte Leiding Felipe Hernandez Britt Crooks	RMCI RMCI RMCI RMCI RMCI RMCI RMCI Wilson Electric	General Contractor Electrical Contractor

Work Performed

PLANNED ACTIVITIES:

- RMCI will transport the following equipment onto the site:
  - Remaining jersey barriers
  - Storage container with construction equipment
  - Water truck
- The conveyance line pipe is scheduled to be delivered to the laydown yard
- The leak detection system is scheduled to be delivered to the laydown yard.
- Begin placing the jersey barriers and perform general set up.

COMPLETED ACTIVITIES:

- RMCI transported the following equipment onto the site:
  - Completed the transportation of the jersey barriers
  - Light plant
  - Conex storage container
  - HDPE fusion welders
  - Roller bucket for the excavator
  - Water truck
- The leak detection system was delivered to the site and was accepted by EA
- EA, USACE, & AFCEC met with the VA to discuss the installation of the electrical pad, the following are the salient points:
  - Installation of the pad and fencing should not require the remove of existing trees
  - The access gate to the pad will be moved to the southwest corner to avoid existing trees
  - Access during pad installation shall be obtained by removing a small length of chain link fencing along the eastern edge of the parking lot, all fencing shall be reinstalled at the end of each day

MATERIAL DELIVERIES:

The Leak detection system was delivered to the site and was accepted by EA

CONSTRUCTION QUALITY CONTROL ACTIVITIES OR SAMPLES COLLECTED:

Material inspections

OBSERVATIONS OR POSSIBLE VARIATIONS FROM SPECIFICATIONS:

None

Anticipated Activities for the Following Day

- RMCI will transport the following equipment onto the site:
  - Backhoe
- The conveyance line pipe is scheduled to be delivered to the laydown yard
- Begin stump removal
- Begin placing the jersey barriers and perform general set up

Contractor Reports, Manifests, Documents Reviewed and Logged:

COMMENTS OR VARIATIONS:

None

Report Prepared By (Name and Date)

Tyler Curley 9-26-17

RMCI
WAGNUM
WAGNUM
TRAILKING

NON POTABLE
WATER ONLY

mobile mini
RMCI
MINI

DAILY REPORT

(ATTACH ADDITIONAL SHEETS IF NECESSARY)

CONTRACT NAME:	Kirtland AFB Bulk Fuels Facility Expansion of Dissolved Plume GWTS Design	REPORT NO:	001
CONTRACT NUMBER:	W912DR-12-D-0006	REPORT DATE:	26 SEP 17
REVISION NUMBER:	-	REVISION DATE:	-
TASK ORDER NUMBER:	DM01	PROJECT NAME / LOCATION:	Kirtland BFF
PROJECT NUMBER:	62599DM01	PROJECT DESCRIPTION:	Installation of KAFB-106239 Conveyance Line
PROJECT MANAGER:	Devon Jercinovic	FIELD QUALITY MANAGER:	Kevin McKeage
CONSTRUCTION MANAGER:	Tyler Curley	SITE SAFETY MANAGER:	Tyler Curley

AM WEATHER:	Cool Partly Cloudy	PM WEATHER:	Cool Mostly Cloudy	MAX TEMP (F):	75		

SUMMARY OF WORK PERFORMED TODAY

CQM inspection of delivered Leak Detection System

HEALTH AND SAFETY REPORT

SAFETY ACTIONS TAKEN TODAY/SAFETY INSPECTIONS CONDUCTED (Include Observations, Safety Violations, Corrective Instructions Given, Corrective Actions Taken, and Results of Safety Inspections Conducted:

See Construction Managers Daily Report.

TAILGATE TOPICS:

"

SAFE BEHAVIOR OBSERVATIONS/SELF-ASSESSMENTS:

"

OPERATIONS/PRODUCTION REPORT

WORK FORCE – CONTRACTOR AND SUBCONTRACTOR

Company	Cumulative Total of Work Hours From Previous Report	Total Hours Today	Total Work Hours From Start of Injection Event
See CM Daily Report			

EQUIPMENT ON HAND

Description of Equipment	Make/Model/ Manufacturer	Equipment ID Number	Inspection Performed By
Water Truck	Colorado Kenworth	4610	Robert Schmidt
Loader	Volvo L-120	2310	Jesus Moya
Excavator	Komatsu PC-200	1107	Jesus Moya
HDPE Welder	McElroy Tracstar	8617	Not in use
HDPE Welder	McElroy Tracstar	8618	Not in use

COMMENTS (acceptance status, inspection findings, etc.):

OK

WORK AND/OR TESTS ACCOMPLISHED OR IN PROGRESS

Performed Work/Test for Today:

See Construction Managers Daily Report

Planned Work/Test for Tomorrow:

"

Planned Work/Test for Next Week:

"

CHANGED CONDITIONS/DELAY/CONFLICTS ENCOUNTERED (List any conflicts with the project [i.e., scope of work and/or drawings], delays to the project attributable to site and weather conditions, etc. None

VISITORS AND DISCUSSIONS: See CM Daily Report

QUALITY CONTROL REPORT

MATERIALS DELIVERED TO JOB SITE

Quantity/Volume/ Weight	Description of Materials Received	Make/Model/ Manufacturer	Material Lot Number	Inspection Performed By
200'	Leak Detection Jumper Cable	PermaAlert / JMP-U	—	KM
Various	Leak Detection Connectors + Fittings	PermaAlert / Various	—	KM
1	Leak Detection Monitoring Unit	PermaAlert / AT75C	—	KM
3300'	Leak Detection Cable	PermaAlert / AGW-GOLD	—	KM

COMMENTS (acceptance status, inspection findings, etc.): All items intact and acceptable

INSPECTIONS PERFORMED

Task/Activity Inspected	Inspection Performed	Findings
None		

TESTS PERFORMED

Task/Activity Tested	Test Performed	Test Results (Pass/Fail) - Criteria
None		

QUALITY ISSUES AND RESOLUTIONS: None

SUBMITTALS INSPECTION / REVIEW

Submittal No.	Submittal Description	Specification/Plan Reference	Submittal Approved?		Comment/Reason/Action
N-A	Daily Report	–	Yes ☐	No ☐	Pending
N-A	SBO	–	Yes ☐	No ☐	Pending
N-A	PTSP	–	Yes ☐	No ☐	Pending

REGULATORY COMPLIANCE REPORT							
PERMIT INSPECTIONS PERFORMED: None							
WASTE ACCUMULATION/STOCKPILE AREA INSPECTION							
Inspection Performed By:	N/A			Signature of Inspector:			
Accumulation / Stockpile Area Inspected:							
No of Bins:		No of Tankers		No of Roll-Off Boxes:		No. of Tanks	
Inspection Results: N/A							
GENERAL COMMENTS							
General Comments: (rework, directives, etc.): None							
ATTACHMENTS							
List of Attachments: (examples, as applicable: submittals, meeting minutes, safety meeting minutes, COCs, weight tickets, manifests, profiles, rework item list, RFIs, DCNs, photographs, etc.): Photo log							
NOTE: Write all entries legibly in ink. Line out all unused portions or designate as "not applicable". Preparer signs first and last name on each completed daily report. This form may be filled out electronically and signed electronically.				PREPARER'S SIGNATURE		09/26/17 DATE	

Location: Field Trailer
Description: 1265' of AGW-Gold Cable
Date: 26 September 2017 Direction: Down

Location: Field Trailer
Description: 1000' of AGW-Gold Cable
Date: 26 September 2017 Direction: Down

Location: Field Trailer
Description: 8 Jumper Cable Connectors
Date: 26 September 2017 Direction: Down

Location: Field Trailer
Description: 10 AGW-Gold Cable Connectors and 6 Punch-out Connectors
Date: 26 September 2017 Direction: Down

Location: Field Trailer
Description: 390' of AGW-Gold Cable and 200' of Jumper Cable
Date: 26 September 2017 Direction: Down

Location: Field Trailer
Description: AT75C Leak Detection Panel
Date: 26 September 2017 Direction: Down

EA Engineering, Science, and Technology, Inc

Employee/Visitor Register and Safety Brief

Date: 9-20-17

Site Entry/Exit		Name (Printed)	Signature	Company
Time In	Time Out			
0700	1530	Tyler Curley		EA
0700	1530	Robert BeBault	~~Robert BeBault~~	RMCI
0700	1530	Jesus Moya		RMCI
0700	1030	Monte Leiding	Monte Leiding	RMCI
0700	1530	Jerry Patton		RMCI
0700	1530	~~Ed Hyde~~		RMCI
0700	1530	Felipe Hernandez		RMCI
0705	0740	Marcus Chavez		South West
1056	1120	Britt Crooks		Wilson Ec
11:50	1300	Phillip Johnson		RMCI
12:05	1300	Kevin Mckeon		EA
1250	1400	Earl Morse		EA
1300	1345	T Simpler		USACE
1300	1336	Brian Price		VA Sagely
11	1336	Cey Webb		VA Eng
11	1336	Amy Sanchez		USACE
1300	1336	Holly O'Grady	Holly O'Grady	AFCEC
1401	1445	Pete Ferrara		EA

EA ENGINEERING, SCIENCE AND TECHNOLOGY, INC.
SAFETY MEETING REPORT

Date: 9-25-17	**Time:** 0700	**Duration of meeting:** 10	**Project #** 62599M01
Location: KAFB Well 106239		**Task:** Conveyance Line Install	

Type of meeting: X **Daily** ___ **Weekly** ___ **Monthly** ___ **Other:** _____

Items/Issues discussed:

1. Slips, trips, falls
2. Pinch Points
3. Overhead loads / crushing hazards
4. Traffic during on loading trucks
5.

Attach minutes of safety meeting if taken.

Safety questions/issues raised:	Actions/Follow-up needed:
1. None	
2.	
3.	
4.	
5.	
6.	

Remarks: None

Meeting conducted by:
Tyler Curley

EA Engineering, Science, and Technology, Inc.

DAILY SAFETY INSPECTION CHECKLIST
(TO BE COMPLETED EACH DAY OF CONSTRUCTION OR HTRW SITE ACTIVITIES)

Site: KAFB Well 106239
Location: Ridgecrest Dr
Project No.: 62599 DM01
Client: USACE

Prepared by SSHO: Tyler Curley
Project Manager: Devon Jercinovic
Date: 9-26-17

Rating	Y	N	N/A	Comments/Immediate Corrective Action[1]
Accident Prevention Plan (APP) and Site Safety and Health Plan (SSHP) General Requirements				
Are there new onsite personnel? • Did they receive pre-entry briefing and are their names recorded in field logbook or daily log? • Was the USACE PM made aware of the new personnel. • Required training and medical surveillance documentation received (e.g., 40-hr, 8 hr, etc.)?	✓			
Did personnel sign in/out of site?	✓			
Daily tailgate safety meetings conducted and documented?	✓			
Were new activities performed today? Were hazards identified, discussed during the daily safety tailgate, and incorporated into revised APP/SSHP?		✓		
New materials brought on site? MSDSs available?		✓		
Exclusion (EZ), Contamination Reduction (CRZ), and Support Zones (SZ) delineated and enforced?	✓			
General housekeeping measures in place to prevent hazards?	✓			
Emergency Planning				
Were there any changes to emergency contact names, telephone numbers, or hospital? If so, were site personnel made aware and was information distributed/reposted.		✓		
Adequate safety equipment inventory available?	✓			
Fire extinguisher available (monthly inspection of extinguisher will suffice)	✓			
Eyewash station(s) functioning and in place (weekly inspection of eye wash station will suffice)?	✓			
First aid supplies available (weekly inspection of first aid kit will suffice)?	✓			
Communication equipment readily available for emergencies?	✓			
Any reported accidents/incidents at this site? If so, were accident reporting procedures followed?		✓		
Air Monitoring				
Monitoring equipment specified in SSHP available and in working order? Air monitoring instrumentation for this site includes – check each if required/on site, note deficiencies in comments: • Combustible gas meter • Organic vapor analyzer • Contaminant specific analyzer for benzene (if total organic vapor concentrations exceed 0.5 ppm)	✓			
Monitoring equipment calibrated and calibration records	✓			

Y = Satisfactory or Yes; N = Unsatisfactory or No, N/A = Not applicable

Rating	Y	N	N/A	Comments/Immediate Corrective Action[1]
available?				
Environmental and personnel monitoring performed as specified in SSHP?	✓			
PPE				
Proper dermal protection worn by EA and subcontracted employees when handling/ contacting hazardous chemicals or contaminated environmental media?	✓			
Required PPE (hard hats, safety boots / shoes, eye protection with side shields, hearing protection) being worn by EA and subcontracted employees?	✓			
PPE inspection completed by SSHO?	✓			
Drill Rig Operations				
Daily rig inspection completed? Any equipment problems?	✓			
Drill rigs/elevated equipment maintaining minimum 10-ft distance from energized (50 kV) overhead power lines?	✓			
Investigation-derived Waste (IDW)				
Wastes properly staged, secured, and labeled at end of day?			✓	

Additional Comments:

Site Safety and Health Officer's Signature

9-26-17

Date

[1]If a deficiency is noted that cannot be immediately corrected, the SSHO will monitor the progress in correcting the deficiency and will document following:

- Date the deficiency was identified
- Description of the deficiency
- Name of the person responsible for correcting the deficiency
- Projected date of correction
- Actual date of correction.

HEALTH AND SAFETY ACTIVITY REPORT

Site: KAFB Well 100239 Location: Ridgecrest Dr

Weather Cond.: _____ Onsite Hours: From 0700 To _____

Changes in PPE Levels[1]	Work Operations	Reasons for Change
None		

Site Safety and Health Plan Violations	Corrective Action Specified	Corrective Action Taken [2](yes/no)
None		

Observations and Comments:
None

Completed by: Tyler Curley Date: 9-26-17
Site Health and Safety Supervisor

[1]Only SSHO may change PPE levels, using only criteria specified in APP/SSHP.
[2]If a deficiency is noted that cannot be immediately corrected, the SSHO will monitor the progress in correcting the deficiency and will document following:

- Date the deficiency was identified
- Description of the deficiency
- Name of the person responsible for correcting the deficiency
- Projected date of correction
- Actual date of correction.

ENVIRONMENTAL MONITORING RECORD

SITE: KAFB-106239 Conveyance Line Installation

PROJECT NO.: 62599DM01

INSTRUMENT: Quest Noise Dio 1/XH 050017 / Thermo Dust Monitor 5564

Time	Monitoring Location	Reading (dB / mg/m³)	Corrective Action Taken[a]
0910	Cal check	114.1 / N/A	
0914	Sta 5+00	65.2 / 0.017	
0915	sta 1+00	67.3 / 0.023	
1413	Sta 1+00	65.4 / 0.013	
1416	sta 5+00	65.0 / 0.016	

Comments: N = North, E = East, S = South, W = West

Readings were Collected on the N side of Ridgecrest Dr.

(a) Corrective actions taken must be documented whenever readings at or above action levels are reached. Monitoring equipment and action levels are specified in Section 9.33 of the Accident Prevention Plan.

Recorded By: Tyler Corley
Site Health & Safety Officer

Date: 9-26-17

From:	Curley, Tyler
To:	"Trent.Simpler@usace.army.mil"; "Amy.E.Sanchez@usace.army.mil"; "Linda.Dreeland@usace.army.mil"; "Mark.J.Phaneuf@usace.army.mil"; "Carlos.F.Salazar@usace.army.mil"
Cc:	Jercinovic, Devon; McKeage, Kevin; Morse, Earl; Rief, Lucas; Ferrari, Peter
Subject:	Activity Report for KAFB Well 106239 Conveyance Line Installation 27 September 2017
Date:	Wednesday, September 27, 2017 5:11:59 PM
Attachments:	Photos 9-27-17.pdf Daily Field Activities Summary Report.pdf

---

Issues Today 27 Sept 2017:

- None

Resolution of Issues:

- NA

Work Performed Today:

- RMCI transported the following equipment onto the site:
  - Dump truck
- Began stump removal

Installation Completion to Date: 0%

Work Planned for Thursday 28 Sept 2017:

- RMCI will transport the following equipment onto the site:
  - Backhoe
- The conveyance line pipe is scheduled to be delivered to the laydown yard
- Continue stump removal
- Begin placing the jersey barriers and perform general set up

Please let me know if you need additional information.

Tyler Curley, P.E.
EA Engineering, Science, and Technology, Inc., PBC
320 Gold Avenue, SW Suite 1300
Albuquerque, NM 87120
(505) 715-4422 work
(719) 688-9558 cell
tcurley@eaest.com

DAILY FIELD ACTIVITIES SUMMARY REPORT		
PROJECT NAME: KAFB Well 106239 Conveyance Line Installation		
Date: 09-27-17	Time Shift Beginning: 0700	Time Shift Ending:1530
Project Number: 62599DM01		Contract/Task Order No.:
Client: USACE		Report By: Tyler Curley
Contractor(s): RMCI		Project Manager: Devon Jercinovic
Design Manager:		Oversight Manager: Tyler Curley
Design Engineer: George Nemeth		Site Engineer: Tyler Curley
Weather: Overcast/Rainy 70° F		Logbook Number: NA
Personnel Onsite:	**Name:**	**Reason for Being Onsite:**
EA	Tyler Curley Pete Ferrari	Construction/safety oversight Field support
RMCI	Ed Hyde Jerry Patton Felipe Hernandez Robert BeBault Jesus Moya	General Contractor

Work Performed:

Planned Activities:

- Transport backhoe to the site
- Begin stump removal
- Begin placing jersey barriers

Completed Activities:

- Transported dump truck to the site
- Began stump removal
- Continued site set up

Material Deliveries:

- None

Construction Quality Control Activities or Samples Collected:

- None

Observations or Possible Variations from Specifications:

- None

Anticipated Activities for the Following Day:	
Planned Activities: • Continue stump removal • Transport backhoe to the site • Begin placing jersey barriers **Planned Material Deliveries:** • Conveyance line piping is scheduled for delivery	
Contractor Reports, Manifests, Documents Reviewed and Logged:	
None	
Report Completed By:	
Tyler Curley	Date: 27 September 2017

KOMATSU

EA Engineering, Science, and Technology, Inc

Employee/Visitor Register and Safety Brief

Date: 9-27-17

Site Entry/Exit		Name (Printed)	Signature	Company
Time In	Time Out			
0700	1530	Tyler Culley		EA
0700	1530	Jerry Patton		RMCI
0700	1530	Felipe Hernandez	Felipe Hernandez	RMCI
0700	1530	Jesus Moya		RMCI
7:00	1530	Robert BeBault		RMCI
7:00	1530	ED Hyde		RMCI
8:53	0925	Thomas Acosta		RMCI
1020	1050	Pete Ferrara		EA

EA ENGINEERING, SCIENCE AND TECHNOLOGY, INC.
SAFETY MEETING REPORT

Date: 9-27-13	**Time:** 0700	**Duration of meeting:** 10	**Project #** 6259DM01
Location: KAFB Well 106739		**Task:** Conveyance Line Install	

Type of meeting: X **Daily** ___ **Weekly** ___ **Monthly** ___ **Other:** _____

Items/Issues discussed:

1. Slips, trips, falls
2. slick surfaces after rain
3. Traffic
4. Proper PPE
5.

Attach minutes of safety meeting if taken.

Safety questions/issues raised:	Actions/Follow-up needed:
1. None	
2.	
3.	
4.	
5.	
6.	

Remarks:
None

Meeting conducted by:
Tyler Curley

EA Engineering, Science, and Technology, Inc.

DAILY SAFETY INSPECTION CHECKLIST (TO BE COMPLETED EACH DAY OF CONSTRUCTION OR HTRW SITE ACTIVITIES)

Site: KAFB Well 106239
Location: Ridgecrest Dr
Project No.: 62599DM01
Client: USACE

Prepared by SSHO: Tyler Cordey
Project Manager: Devon Jercinovic
Date: 9-27-17

Rating	Y	N	N/A	Comments/Immediate Corrective Action[1]
Accident Prevention Plan (APP) and Site Safety and Health Plan (SSHP) General Requirements				
Are there new onsite personnel? • Did they receive pre-entry briefing and are their names recorded in field logbook or daily log? • Was the USACE PM made aware of the new personnel. • Required training and medical surveillance documentation received (e.g., 40-hr, 8 hr, etc.)?	✓			
Did personnel sign in/out of site?	✓			
Daily tailgate safety meetings conducted and documented?	✓			
Were new activities performed today? Were hazards identified, discussed during the daily safety tailgate, and incorporated into revised APP/SSHP?		✓		
New materials brought on site? MSDSs available?		✓		
Exclusion (EZ), Contamination Reduction (CRZ), and Support Zones (SZ) delineated and enforced?	✓			
General housekeeping measures in place to prevent hazards?	✓			
Emergency Planning				
Were there any changes to emergency contact names, telephone numbers, or hospital? If so, were site personnel made aware and was information distributed/reposted.		✓		
Adequate safety equipment inventory available?	✓			
Fire extinguisher available (monthly inspection of extinguisher will suffice)	✓			
Eyewash station(s) functioning and in place (weekly inspection of eye wash station will suffice)?	✓			
First aid supplies available (weekly inspection of first aid kit will suffice)?	✓			
Communication equipment readily available for emergencies?	✓			
Any reported accidents/incidents at this site? If so, were accident reporting procedures followed?		✓		
Air Monitoring				
Monitoring equipment specified in SSHP available and in working order? Air monitoring instrumentation for this site includes – check each if required/on site, note deficiencies in comments: • Combustible gas meter • Organic vapor analyzer • Contaminant specific analyzer for benzene (if total organic vapor concentrations exceed 0.5 ppm)	✓			
Monitoring equipment calibrated and calibration records	✓			

Y = Satisfactory or Yes; N = Unsatisfactory or No, N/A = Not applicable

Rating	Y	N	N/A	Comments/Immediate Corrective Action[1]
available?				
Environmental and personnel monitoring performed as specified in SSHP?	✓			
PPE				
Proper dermal protection worn by EA and subcontracted employees when handling/ contacting hazardous chemicals or contaminated environmental media?	✓			
Required PPE (hard hats, safety boots / shoes, eye protection with side shields, hearing protection) being worn by EA and subcontracted employees?	✓			
PPE inspection completed by SSHO?	✓			
Drill Rig Operations				
Daily rig inspection completed? Any equipment problems?	✓			
Drill rigs/elevated equipment maintaining minimum 10-ft distance from energized (50 kV) overhead power lines?	✓			
Investigation-derived Waste (IDW)				
Wastes properly staged, secured, and labeled at end of day?			✓	

Additional Comments:

Site Safety and Health Officer's Signature

9-27-17
Date

[1]If a deficiency is noted that cannot be immediately corrected, the SSHO will monitor the progress in correcting the deficiency and will document following:

- Date the deficiency was identified
- Description of the deficiency
- Name of the person responsible for correcting the deficiency
- Projected date of correction
- Actual date of correction.

HEALTH AND SAFETY ACTIVITY REPORT

Site: KAFB Well 106239 Location: Ridgecrest Dr

Weather Cond.: _____ Onsite Hours: From 0700 To _____

Changes in PPE Levels[1]	Work Operations	Reasons for Change
None		

Site Safety and Health Plan Violations	Corrective Action Specified	Corrective Action Taken [2](yes/no)
None		

Observations and Comments:
None

Completed by: Tyler Curley Date: 9-27-17
Site Health and Safety Supervisor

[1]Only SSHO may change PPE levels, using only criteria specified in APP/SSHP.
[2]If a deficiency is noted that cannot be immediately corrected, the SSHO will monitor the progress in correcting the deficiency and will document following:

- Date the deficiency was identified
- Description of the deficiency
- Name of the person responsible for correcting the deficiency
- Projected date of correction
- Actual date of correction.

ENVIRONMENTAL MONITORING RECORD

SITE: KAFB-106239 Conveyance Line Installation

PROJECT NO.: 62599DM01

INSTRUMENT: Quest Noise Pro NXH 050017 / Thermo Dust Monitor 5564

Time	Monitoring Location	Reading (dB / mg/m³)	Corrective Action Taken[a]
1020	Col check	113.9 dB	
1025	Sta 1+00	67.9 / 0.013	
1029	Sta 5+00	65.0 / 0.012	
1405	Sta 5+00	65.2 / 0.004	
1409	Sta 1+000	66.0 / 0.005	

Comments: N = North, E = East, S = South, W = West

(a) Corrective actions taken must be documented whenever readings at or above action levels are reached. Monitoring equipment and action levels are specified in Section 9.33 of the Accident Prevention Plan.

Recorded By: Tyler Curley
Site Health & Safety Officer

Date: 9-27-17

From:	Curley, Tyler
To:	"Trent.Simpler@usace.army.mil"; "Amy.E.Sanchez@usace.army.mil"; "Mark.J.Phaneuf@usace.army.mil"; "Linda.Dreeland@usace.army.mil"; "Carlos.F.Salazar@usace.army.mil"
Cc:	Jercinovic, Devon; McKeage, Kevin; Morse, Earl; Rief, Lucas; Ferrari, Peter
Subject:	Activity Report for KAFB Well 106239 Conveyance Line Installation 28 September 2017
Date:	Thursday, September 28, 2017 7:24:59 PM
Attachments:	002 COM Report 28SEP17.pdf Daily Field Activities Summary Report.pdf Photos 9-28-17.pdf

---

Issues Today 28 Sept 2017:

- None

Resolution of Issues:

- NA

Work Performed Today:

- Transported dump truck off the site
- Continued stump removal
- Began placing jersey barriers
- Continued site set up
- The conveyance line piping (HDPE) was delivered to the site

Installation Completion to Date: 0%

Work Planned for Friday 29 Sept 2017:

- Continue stump removal
- Transport backhoe to the site
- Continue placing jersey barriers

Please let me know if you need additional information.

Tyler Curley, P.E.
EA Engineering, Science, and Technology, Inc., PBC
320 Gold Avenue, SW Suite 1300
Albuquerque, NM 87120
(505) 715-4422 work
(719) 688-9558 cell
tcurley@eaest.com

DAILY FIELD ACTIVITIES SUMMARY REPORT		
PROJECT NAME: KAFB Well 106239 Conveyance Line Installation		
Date: 09-28-17	Time Shift Beginning: 0700	Time Shift Ending:1530
Project Number: 62599DM01		Contract/Task Order No.:
Client: USACE		Report By: Tyler Curley
Contractor(s): RMCI		Project Manager: Devon Jercinovic
Design Manager:		Oversight Manager: Tyler Curley
Design Engineer: George Nemeth		Site Engineer: Tyler Curley
Weather: Overcast 70° F		Logbook Number: NA
Personnel Onsite:	**Name:**	**Reason for Being Onsite:**
EA	Tyler Curley Pete Ferrari Kevin McKeage	Construction/safety oversight Health and safety officer/ field support CQM
RMCI	Ed Hyde Jerry Patton Phillip Johnson Felipe Hernandez Robert BeBault Jesus Moya Marcos Torres Monte Leiding	General Contractor
Inspection Pluss	Jose Doleon Saul Rivera	Silt fence installation

Work Performed:

Planned Activities:

- Transport backhoe to the site
- Continue stump removal
- Begin placing jersey barriers
- Conveyance line piping is scheduled to be delivered to the site

Completed Activities:

- Transported dump truck off the site
- Continued stump removal
- Began placing jersey barriers
- Continued site set up
- The conveyance line piping (HDPE) was delivered to the site

Material Deliveries:

- Conveyance line piping (HDPE)

Construction Quality Control Activities or Samples Collected:

- Material inspections

Observations or Possible Variations from Specifications:

- None

Anticipated Activities for the Following Day:	
Planned Activities: • Continue stump removal • Transport backhoe to the site • Continue placing jersey barriers **Planned Material Deliveries:** • Conveyance line piping is scheduled for delivery	
Contractor Reports, Manifests, Documents Reviewed and Logged:	
None	
Report Completed By:	
Tyler Curley	Date: 28 September 2017

DAILY REPORT

(ATTACH ADDITIONAL SHEETS IF NECESSARY)

CONTRACT NAME:	Kirtland AFB Bulk Fuels Facility Expansion of Dissolved Plume GWTS Design	REPORT NO:	002
CONTRACT NUMBER:	W912DR-12-D-0006	REPORT DATE:	28 SEP 17
REVISION NUMBER:	-	REVISION DATE:	-
TASK ORDER NUMBER:	DM01	PROJECT NAME / LOCATION:	Kirtland BFF
PROJECT NUMBER:	62599DM01	PROJECT DESCRIPTION:	Installation of KAFB-106239 Conveyance Line
PROJECT MANAGER:	Devon Jercinovic	FIELD QUALITY MANAGER:	Kevin McKeone
CONSTRUCTION MANAGER:	Tylor Curley	SITE SAFETY MANAGER:	Tyler Curley

AM WEATHER:	Cool Mostly Cloudy	PM WEATHER:	Cool Mostly Cloudy	MAX TEMP (F):	69		

SUMMARY OF WORK PERFORMED TODAY

CQM Inspection of delivered Dual Walled Piping.

HEALTH AND SAFETY REPORT

SAFETY ACTIONS TAKEN TODAY/SAFETY INSPECTIONS CONDUCTED (Include Observations, Safety Violations, Corrective Instructions Given, Corrective Actions Taken, and Results of Safety Inspections Conducted:

See Construction Managers' Daily Report

TAILGATE TOPICS:

"

SAFE BEHAVIOR OBSERVATIONS/SELF-ASSESSMENTS:

"

OPERATIONS/PRODUCTION REPORT

WORK FORCE – CONTRACTOR AND SUBCONTRACTOR

Company	Cumulative Total of Work Hours From Previous Report	Total Hours Today	Total Work Hours From Start of Injection Event
See CM Daily Report			

EQUIPMENT ON HAND

Description of Equipment	Make/Model/ Manufacturer	Equipment ID Number	Inspection Performed By
Water Truck	Colorado Kenworth	4610	Robert Bebault
Loader	Volvo L-120	2310	Jesus Moya
Excavator	Komatsu PC-200	1107	Jesus Moya
HDPE Welder	McElroy Tracstar	8617	Not in Use
HDPE Welder	McElroy Tracstar	8618	Not in Use

COMMENTS (acceptance status, inspection findings, etc.):

OK

WORK AND/OR TESTS ACCOMPLISHED OR IN PROGRESS

Performed Work/Test for Today: See Construction Manager's Daily Report

Planned Work/Test for Tomorrow: "

Planned Work/Test for Next Week: "

CHANGED CONDITIONS/DELAY/CONFLICTS ENCOUNTERED (List any conflicts with the project [i.e., scope of work and/or drawings], delays to the project attributable to site and weather conditions, etc. None

VISITORS AND DISCUSSIONS: See CM's Daily Report.

QUALITY CONTROL REPORT

MATERIALS DELIVERED TO JOB SITE

Quantity/Volume/ Weight	Description of Materials Received	Make/Model/ Manufacturer	Material Lot Number	Inspection Performed By
66	40' Sections of Dual Wall	Asahi America	–	KM
Various	Fittings, bends, and centralizers	Asahi America	–	KM
9	Tees, 8 with caps	Asahi America	–	KM

COMMENTS (acceptance status, inspection findings, etc.): All items intact and meet submittal requirements 2 pieces of 40' with damage that will be cut to remove damage, if used.

INSPECTIONS PERFORMED

Task/Activity Inspected	Inspection Performed	Findings
None		

TESTS PERFORMED

Task/Activity Tested	Test Performed	Test Results (Pass/Fail) - Criteria
None		

QUALITY ISSUES AND RESOLUTIONS: None

SUBMITTALS INSPECTION / REVIEW

Submittal No.	Submittal Description	Specification/Plan Reference	Submittal Approved?		Comment/Reason/Action
NA	Daily Report	–	Yes ☐	No ☐	Pending
NA	SBO	–	Yes ☐	No ☐	Pending
NA	PTSP	–	Yes ☐	No ☐	Pending

REGULATORY COMPLIANCE REPORT							
PERMIT INSPECTIONS PERFORMED: None							
WASTE ACCUMULATION/STOCKPILE AREA INSPECTION							
Inspection Performed By:	N/A			Signature of Inspector:			
Accumulation / Stockpile Area Inspected:							
No of Bins:		No of Tankers		No of Roll-Off Boxes:		No. of Tanks	
Inspection Results: N/A							
GENERAL COMMENTS							
General Comments: (rework, directives, etc.): See attached photolog for materials photographs.							
ATTACHMENTS							
List of Attachments: (examples, as applicable: submittals, meeting minutes, safety meeting minutes, COCs, weight tickets, manifests, profiles, rework item list, RFIs, DCNs, photographs, etc.): Photo log + Packing Slip.							
NOTE: Write all entries legibly in ink. Line out all unused portions or designate as "not applicable". Preparer signs first and last name on each completed daily report. This form may be filled out electronically and signed electronically.				PREPARER'S SIGNATURE		DATE: 28 SEP 17	

Location: Field Trailer
Description: Offloading of dual-walled piping
Date: 28 September 2017 Direction: South

Location: Field Trailer
Description: Small scrape to piping that will be cut out if section is needed for the installation
Date: 28 September 2017 Direction: South

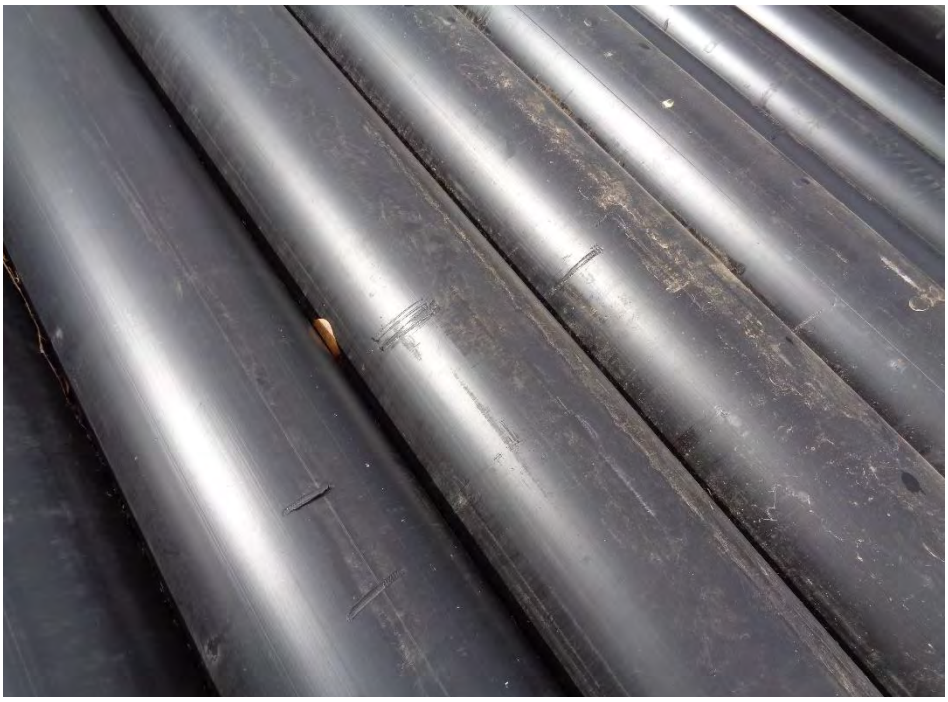

Location: Field Trailer
Description: Surficial scrapes on pipes that do not present a risk to line integrity
Date: 28 September 2017 Direction: Down

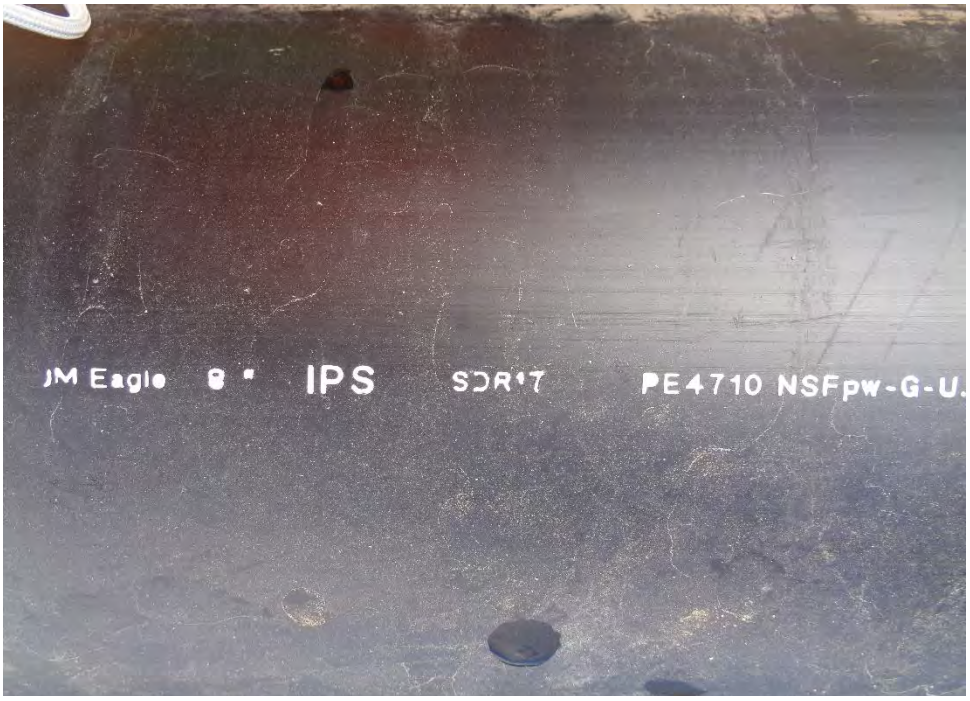

Location: Field Trailer
Description: Pipe specifications
Date: 28 September 2017 Direction: Down

Location: Field Trailer
Description: Internal pulling cable for pulling leak detection cable
Date: 28 September 2017 Direction: Down

Location: Field Trailer
Description: Small scrape to piping that will be cut out if section is needed for the installation (middle pipe)
Date: 28 September 2017 Direction: West

Location: Field Trailer
Description: Fittings, bends, centralizers, terminations, etc.
Date: 28 September 2017 Direction: Down

Location: Field Trailer
Description: Piping tees for installation of the leak detection cable connectors
Date: 28 September 2017 Direction: Down

Location: Field Trailer
Description: Tee specifications
Date: 28 September 2017 Direction: Down

Location: Field Trailer
Description: Pipe centralizers
Date: 28 September 2017 Direction: Down

PACKING SLIP

Date
8/10/2017

Name / Address	Ship To
ASAHI/AMERICA, INC P.O. BOX 1108 LAWRENCE, MA 01843	RMCI, INC. LAYDOWN YARD NEAR CORNER OF SAN PEDRO SE & RIDGECREST SE ALBUQUERQUE, NM 87108

P.O. No.	Terms	Ship Via	SERVICE	Ship Date
76276-004	Net 30	FLATBED		9/26/2017

Item	Description	Ordered	U/M	Shipped Today
NON INVENTO...	4" X 8" SDR 11 X SDR 17 150# FLANGED END TERMINATION WITH 3/4" ANNULAR TAP	1	EA	1
NON INVENTO...	4" SOLID HDPE BLIND FLANGE X 1" THICKNESS W/2" FNPT CENTER TAP	✓ 2	EA	2
4032583	4" SDR 11 X 8" SDR 17 HDPE D/C EQUAL TEE	✓ 1	EA	1
NON INVENTO...	8" SOLID HDPE BLIND FLANGE X 1" THICKNESS W/2" FNPT CENTER TAP	✓ 1	EA	1
4002583	4"X8" D/C HDPE SDR 11 X 17 PIPE X 40 FT. LENGTH - WITH PULL ROPE INSTALLED	✓ 14	LT	14
NON INVENTO...	4" X 8" SDR11 X SDR 17 HDPE END CENTRALIZER	✓ 6	EA	6
NON INVENTO...	4" X 8" SDR 11 X SDR 17 150# FLANGED END TERMINATION - NO TAP	✓ 3	EA	3
NON INVENTO...	4" X 8" SDR 11 X SDR 17 HDPE END CENTRALIZER	✓ 27	EA	27
4002583	4"X8" D/C HDPE SDR 11 X 17 PIPE X 40 FT. LENGTH - WITH PULL ROPE INSTALLED	✓ 52	LT	52
NON INVENTO...	4" X 8" SDR 11 X SDR 17 45 DEGREE ELBOW	✓ 6	EA	6
NON INVENTO...	4" X 8" SDR 11 X SDR 17 22 1/2 DEGREE ELBOW	✓ 1	EA	1
NON INVENTO...	4" X 8" SDR 11 X SDR 17 ACCESS TEE PER DRAWING	✓ 8	EA	8
SHIPPING/DELI...	OUTBOUND DEDICATED FLATBED TRUCKING TO SITE	✓ 1		

(13) FLAT BUNDLES X 40 FT.
(1) FITTING GAYLORD ON WOODEN SKID/PALLET

PLEASE CHECK & REVIEW ITEMS LISTED THANK YOU !

Signature _____

PACKING SLIP

Date	Invoice #
9/26/2017	2477

Bill To	Ship To
ASAHI/AMERICA, INC P.O. BOX 1108 LAWRENCE, MA 01843	RMCI, INC. C/O LAYDOWN YARD NEAR CORNER OF SAN PEDRO SE & RIDGECREST ALBUQUERQUE, NM 87108

P.O. No.	Service	S.O. No.
76410-000		2288

Terms	Ship Date	Ship Via
Net 30	9/26/2017	FLAT BED

Item	Description	Ordered	Backordered	Shipped	U/M
NON INVEN...	4" X 8" SDR 11 X SDR 17 FLUID LOCK HDPE PULLING HEAD SHIP ITEMS WITH PO 72676, PPI SO #2272	2	0	✓ 2	EA

PLEASE CHECK ALL ITEMS & QUANTITIES

NAME: _____

DATE: _____

EA Engineering, Science, and Technology, Inc

Employee/Visitor Register and Safety Brief				
Date: 9-28-17				
Site Entry/Exit		Name (Printed)	Signature	Company
Time In	Time Out			
0700	1545	Tyler Corley		EA
7:00	1545	Ed Hyde		RMCI
7:00	1545	Jerry Patton		RMCI
7:00	1530	Jesus Mayorga		RMCI
7:00	1530	Felipe Hernandez	Felipe Hernandez	RMCI
7:00	1530	MARCOS TOLEDO		RMCI
7:00	1530	Robert BeBault		RMCI
0700	0715	Monte Leidima	Monte Leidima	RMCI
0700	0701	[illegible]		RMCI
0914	1050	Phillip Johnson		RMCI
10:50	1200	Thomas Rhodes		Alt Materials
11:00	1220	Kevin McKenzie		EA
1300	1450	Pete Ferrara		EA
1320	1450	Josi DeLeon		Inspection Pluss
1320	1450	Saul Rivera	Saul Rivera	Inspection Plus

ENVIRONMENTAL MONITORING RECORD

SITE: KAFB-106239 Conveyance Line Installation

PROJECT NO.: 62599DM01

INSTRUMENT: Quest Noise Pro NXH 05007 / Thermo Dust Monitor

Time	Monitoring Location	Reading (dB / mg/m³)	Corrective Action Taken[a]
1230	Cal check	114.3 / NA	
1233	Sta 20+00	65.1 / 0.008	
1235	Sta 15+00	67.0 / 0.012	
1237	Sta 10+00	67.4 / 0.10	
1239	Sta 5+00	65.0 / 0.011	

Comments: N = North, E = East, S = South, W = West

(a) Corrective actions taken must be documented whenever readings at or above action levels are reached. Monitoring equipment and action levels are specified in Section 9.33 of the Accident Prevention Plan.

Recorded By: Tyler Curley
Site Health & Safety Officer

Date: 9-28-17

EA ENGINEERING, SCIENCE AND TECHNOLOGY, INC.
SAFETY MEETING REPORT

Date: 9-25-17	**Time:** 0700	**Duration of meeting:** 10	**Project #** 67549DM01
Location: KAFB Well 106239		**Task:** Conveyance Line Install	

Type of meeting: X **Daily** ____ **Weekly** ____ **Monthly** ____ **Other:**_____

Items/Issues discussed:

1. Wet / slick surfaces
2. Pinch / crush points
3. Traffic
4. Hospital Route
5.

Attach minutes of safety meeting if taken.

Safety questions/issues raised:	Actions/Follow-up needed:
1. None	
2.	
3.	
4.	
5.	
6.	

Remarks: None

Meeting conducted by:
Tyler Curley

EA Engineering, Science, and Technology, Inc.

DAILY SAFETY INSPECTION CHECKLIST (TO BE COMPLETED EACH DAY OF CONSTRUCTION OR HTRW SITE ACTIVITIES)

Site: KAFB Well 106239
Location: Ridgecrest DR
Project No.: 62599.0101
Client: USACE

Prepared by SSHO: Tyler Corley
Project Manager: Devon Jercinovic
Date: 9-28-17

Rating	Y	N	N/A	Comments/Immediate Corrective Action[1]
Accident Prevention Plan (APP) and Site Safety and Health Plan (SSHP) General Requirements				
Are there new onsite personnel? • Did they receive pre-entry briefing and are their names recorded in field logbook or daily log? • Was the USACE PM made aware of the new personnel. • Required training and medical surveillance documentation received (e.g., 40-hr, 8 hr, etc.)?	✓			
Did personnel sign in/out of site?	✓			
Daily tailgate safety meetings conducted and documented?	✓			
Were new activities performed today? Were hazards identified, discussed during the daily safety tailgate, and incorporated into revised APP/SSHP?		✓		
New materials brought on site? MSDSs available?	✓			
Exclusion (EZ), Contamination Reduction (CRZ), and Support Zones (SZ) delineated and enforced?	✓			
General housekeeping measures in place to prevent hazards?	✓			
Emergency Planning				
Were there any changes to emergency contact names, telephone numbers, or hospital? If so, were site personnel made aware and was information distributed/reposted.		✓		
Adequate safety equipment inventory available?	✓			
Fire extinguisher available (monthly inspection of extinguisher will suffice)	✓			
Eyewash station(s) functioning and in place (weekly inspection of eye wash station will suffice)?	✓			
First aid supplies available (weekly inspection of first aid kit will suffice)?	✓			
Communication equipment readily available for emergencies?	✓			
Any reported accidents/incidents at this site? If so, were accident reporting procedures followed?		✓		
Air Monitoring				
Monitoring equipment specified in SSHP available and in working order? Air monitoring instrumentation for this site includes – check each if required/on site, note deficiencies in comments: • Combustible gas meter • Organic vapor analyzer • Contaminant specific analyzer for benzene (if total organic vapor concentrations exceed 0.5 ppm)	✓			
Monitoring equipment calibrated and calibration records				

Y = Satisfactory or Yes; N = Unsatisfactory or No, N/A = Not applicable

Rating	Y	N	N/A	Comments/Immediate Corrective Action[1]
available?				
Environmental and personnel monitoring performed as specified in SSHP?	✓			
PPE				
Proper dermal protection worn by EA and subcontracted employees when handling/ contacting hazardous chemicals or contaminated environmental media?	✓			
Required PPE (hard hats, safety boots / shoes, eye protection with side shields, hearing protection) being worn by EA and subcontracted employees?	✓			
PPE inspection completed by SSHO?	✓			
Drill Rig Operations				
Daily rig inspection completed? Any equipment problems?	✓			
Drill rigs/elevated equipment maintaining minimum 10-ft distance from energized (50 kV) overhead power lines?	✓			
Investigation-derived Waste (IDW)				
Wastes properly staged, secured, and labeled at end of day?			✓	

Additional Comments:

Tyler Curley
Site Safety and Health Officer's Signature

9-28-17
Date

[1]If a deficiency is noted that cannot be immediately corrected, the SSHO will monitor the progress in correcting the deficiency and will document following:

- Date the deficiency was identified
- Description of the deficiency
- Name of the person responsible for correcting the deficiency
- Projected date of correction
- Actual date of correction.

HEALTH AND SAFETY ACTIVITY REPORT

Site: KAFB Well 106739 Location: Ridgecrest Dr

Weather Cond.: _____ Onsite Hours: From 0700 To _____

Changes in PPE Levels[1]	Work Operations	Reasons for Change
None		

Site Safety and Health Plan Violations	Corrective Action Specified	Corrective Action Taken [2](yes/no)
None		

Observations and Comments:
None

Completed by: Tyler Curley Date: 9-28-17
Site Health and Safety Supervisor

[1]Only SSHO may change PPE levels, using only criteria specified in APP/SSHP.
[2]If a deficiency is noted that cannot be immediately corrected, the SSHO will monitor the progress in correcting the deficiency and will document following:

- Date the deficiency was identified
- Description of the deficiency
- Name of the person responsible for correcting the deficiency
- Projected date of correction
- Actual date of correction.

From:	Curley, Tyler
To:	"Trent.Simpler@usace.army.mil"; "Amy.E.Sanchez@usace.army.mil"; "Carlos.F.Salazar@usace.army.mil"; "Linda.Dreeland@usace.army.mil"; "Mark.J.Phaneuf@usace.army.mil"
Cc:	Jercinovic, Devon; McKeage, Kevin; Rief, Lucas; Morse, Earl; Ferrari, Peter
Subject:	Activity Report for KAFB Well 106239 Conveyance Line Installation 29 September 2017
Date:	Friday, September 29, 2017 11:54:58 AM
Attachments:	Photos 9-29-17.pdf Daily Field Activities Summary Report.pdf

---

Issues Today 29 Sept 2017:

- None

Resolution of Issues:

- NA

Work Performed Today:

- Completed stump removal
- Set up jersey barriers
- Continued site set up

Installation Completion to Date: 0%

Work Planned for 2 Oct 2017:

- Survey the piping alignment
- Begin trenching
- Begin piping installation

Please let me know if you need additional information.

Tyler Curley, P.E.
EA Engineering, Science, and Technology, Inc., PBC
320 Gold Avenue, SW Suite 1300
Albuquerque, NM 87120
(505) 715-4422 work
(719) 688-9558 cell
tcurley@eaest.com

DAILY FIELD ACTIVITIES SUMMARY REPORT		
PROJECT NAME: KAFB Well 106239 Conveyance Line Installation		
Date: 09-29-17	Time Shift Beginning: 0700	Time Shift Ending:1530
Project Number: 62599DM01		Contract/Task Order No.:
Client: USACE		Report By: Tyler Curley
Contractor(s): RMCI		Project Manager: Devon Jercinovic
Design Manager:		Oversight Manager: Tyler Curley
Design Engineer: George Nemeth		Site Engineer: Tyler Curley
Weather: Overcast 70° F		Logbook Number: NA
Personnel Onsite:	**Name:**	**Reason for Being Onsite:**
EA	Tyler Curley Pete Ferrari	Construction/safety oversight Health and safety officer/ field support
RMCI	Ed Hyde Jerry Patton Felipe Hernandez Robert BeBault Jesus Moya Marcos Torres Monte Leiding	General Contractor
Wilson Electric	Britt Crooks	Electrical Contractor
High Mesa	Jared Bugg Leroy Moorhead	Potholing

Work Performed:

Planned Activities:

- Continue stump removal
- Begin placing jersey barriers
- Conveyance line piping is scheduled to be delivered to the site

Completed Activities:

- Completed stump removal
- Began placing jersey barriers
- Continued site set up

Material Deliveries:

- None

Construction Quality Control Activities or Samples Collected:

- None

Observations or Possible Variations from Specifications:

- None

Anticipated Activities for the Following Day:

Planned Activities:

- Survey the piping alignment

• Begin trenching • Begin pipe installation **Planned Material Deliveries:** • Electrical conduit is scheduled to be delivered to the site
Contractor Reports, Manifests, Documents Reviewed and Logged:
None
Report Completed By:

Tyler Curley	Date: 29 September 2017

KOMATSU

EA Engineering, Science, and Technology, Inc

Employee/Visitor Register and Safety Brief

Date: 9-29-31

Site Entry/Exit		Name (Printed)	Signature	Company
Time In	Time Out			
0700	1115	Tyler Curley		EA
0700	1100	Felipe Hernandez	Felipe Hernandez	RMCI
7:00	1100	Jesus Moya		RMCI
7:00	1115	Jerry Patton		RmcI
7:50	1100	Marcos Torres.		R.M. C.I.
7:00	1100	Robert BeBault		RmcI
0700	0830	Monte Leiding	Monte Leiding	RMCI
0700	1010	LEROY MOORHEAD		HMCG
0700	1010	Jared Bugg		HMCG
0735	1050	Pete Ferrari		EA
850	0940	Britt Crooks		Wilson
9:00	1115	ED Hyde		RMCI

EA Engineering, Science, and Technology, Inc.

DAILY SAFETY INSPECTION CHECKLIST (TO BE COMPLETED EACH DAY OF CONSTRUCTION OR HTRW SITE ACTIVITIES)

Site: KAFB Well 106239
Location: Didgeriest Dr
Project No.: 69549.0001
Client: USACE

Prepared by SSHO: Tyler Corley
Project Manager: Devon Tercinovic
Date: 9-29-17

Rating	Y	N	N/A	Comments/Immediate Corrective Action[1]
Accident Prevention Plan (APP) and Site Safety and Health Plan (SSHP) General Requirements				
Are there new onsite personnel? • Did they receive pre-entry briefing and are their names recorded in field logbook or daily log? • Was the USACE PM made aware of the new personnel. • Required training and medical surveillance documentation received (e.g., 40-hr, 8 hr, etc.)?		✓		
Did personnel sign in/out of site?	✓			
Daily tailgate safety meetings conducted and documented?	✓			
Were new activities performed today? Were hazards identified, discussed during the daily safety tailgate, and incorporated into revised APP/SSHP?		✓		
New materials brought on site? MSDSs available?		✓		
Exclusion (EZ), Contamination Reduction (CRZ), and Support Zones (SZ) delineated and enforced?	✓			
General housekeeping measures in place to prevent hazards?	✓			
Emergency Planning				
Were there any changes to emergency contact names, telephone numbers, or hospital? If so, were site personnel made aware and was information distributed/reposted.		✓		
Adequate safety equipment inventory available?	✓			
Fire extinguisher available (monthly inspection of extinguisher will suffice)	✓			
Eyewash station(s) functioning and in place (weekly inspection of eye wash station will suffice)?	✓			
First aid supplies available (weekly inspection of first aid kit will suffice)?	✓			
Communication equipment readily available for emergencies?	✓			
Any reported accidents/incidents at this site? If so, were accident reporting procedures followed?		✓		
Air Monitoring				
Monitoring equipment specified in SSHP available and in working order? Air monitoring instrumentation for this site includes – check each if required/on site, note deficiencies in comments: • Combustible gas meter • Organic vapor analyzer • Contaminant specific analyzer for benzene (if total organic vapor concentrations exceed 0.5 ppm)	✓			
Monitoring equipment calibrated and calibration records	✓			

Y = Satisfactory or Yes; N = Unsatisfactory or No, N/A = Not applicable

Rating	Y	N	N/A	Comments/Immediate Corrective Action[1]
available?				
Environmental and personnel monitoring performed as specified in SSHP?	✓			
PPE				
Proper dermal protection worn by EA and subcontracted employees when handling/ contacting hazardous chemicals or contaminated environmental media?	✓			
Required PPE (hard hats, safety boots / shoes, eye protection with side shields, hearing protection) being worn by EA and subcontracted employees?	✓			
PPE inspection completed by SSHO?	✓			
Drill Rig Operations				
Daily rig inspection completed? Any equipment problems?	✓			
Drill rigs/elevated equipment maintaining minimum 10-ft distance from energized (50 kV) overhead power lines?	✓			
Investigation-derived Waste (IDW)				
Wastes properly staged, secured, and labeled at end of day?			✓	

Additional Comments:

Site Safety and Health Officer's Signature

9-29-17

Date

[1]If a deficiency is noted that cannot be immediately corrected, the SSHO will monitor the progress in correcting the deficiency and will document following:

- Date the deficiency was identified
- Description of the deficiency
- Name of the person responsible for correcting the deficiency
- Projected date of correction
- Actual date of correction.

HEALTH AND SAFETY ACTIVITY REPORT

Site: KAFB Well 106239 Location: Ridgecrest Dr

Weather Cond.: Overcast Onsite Hours: From 0700 To _____

Changes in PPE Levels[1]	Work Operations	Reasons for Change
None		

Site Safety and Health Plan Violations	Corrective Action Specified	Corrective Action Taken [2](yes/no)
None		

Observations and Comments:

None

Completed by: Tyler Curley Date:
Site Health and Safety Supervisor

[1]Only SSHO may change PPE levels, using only criteria specified in APP/SSHP.
[2]If a deficiency is noted that cannot be immediately corrected, the SSHO will monitor the progress in correcting the deficiency and will document following:

- Date the deficiency was identified
- Description of the deficiency
- Name of the person responsible for correcting the deficiency
- Projected date of correction
- Actual date of correction.

EA ENGINEERING, SCIENCE AND TECHNOLOGY, INC.
SAFETY MEETING REPORT

Date: 9-29-17	**Time:** 0700	**Duration of meeting:** 10	**Project #** [illegible]
Location: KAFB well 106239		**Task:** Conveyance line Install	

Type of meeting: X Daily ___ Weekly ___ Monthly ___ Other: _____

Items/Issues discussed:

1. Slick surfaces
2. Over head power lines
3. Crush point
4. Traffic
5.

Attach minutes of safety meeting if taken.

Safety questions/issues raised:	Actions/Follow-up needed:
1. Pedestrians → Direct offsite + to EA	
2.	
3.	
4.	
5.	
6.	

Remarks:

None

Meeting conducted by:

Tyler Curley

ENVIRONMENTAL MONITORING RECORD

SITE: KAFB-106239 Conveyance Line Installation

PROJECT NO.: 62599DM01

INSTRUMENT: Quest Noise Pro / Thermo dust monitor

Time	Monitoring Location	Reading (dB / mg/m³)	Corrective Action Taken[a]
	Cal check	114.2 / 0.000	
	Sta 1+00	65.0 / 0.002	
	Sta 5+00	65.0 / 0.040	

Comments: N = North, E = East, S = South, W = West

(a) Corrective actions taken must be documented whenever readings at or above action levels are reached. Monitoring equipment and action levels are specified in Section 9.33 of the Accident Prevention Plan.

Recorded By: _____ Date: 9-7-17

Site Health & Safety Officer

From:	Curley, Tyler
To:	"Trent.Simpler@usace.army.mil"; "Amy.E.Sanchez@usace.army.mil"; "Mark.J.Phaneuf@usace.army.mil"; "Linda.Dreeland@usace.army.mil"; "Carlos.F.Salazar@usace.army.mil"
Cc:	McKeage, Kevin; Jercinovic, Devon; Ferrari, Peter; Rief, Lucas
Subject:	Activity Report for KAFB Well 106239 Conveyance Line Installation 2 October 2017
Date:	Monday, October 02, 2017 6:26:14 PM
Attachments:	003 COM Report 02OCT17.pdf Daily Field Activities Summary Report.pdf Photos 10-2-17.pdf

---

Issues Today Monday 2 October 2017:

- Detectable marking tape has not been delivered

Resolution of Issues:

- RMCI is checking on the location of the marking tape

Work Performed Today:

- Set up jersey barriers
- Continued site set up
- Surveyed in the conveyance alignment
- Potholed the SAS line near Sta 5+25

Installation Completion to Date: 0%

Work Planned for 3 Oct 2017:

- Prep for HDD
- Prep for trenching

Please let me know if you need additional information.

Tyler Curley, P.E.
EA Engineering, Science, and Technology, Inc., PBC
320 Gold Avenue, SW Suite 1300
Albuquerque, NM 87120
(505) 715-4422 work
(719) 688-9558 cell
tcurley@eaest.com

DAILY FIELD ACTIVITIES SUMMARY REPORT		
PROJECT NAME: KAFB Well 106239 Conveyance Line Installation		
Date: 10-02-17	Time Shift Beginning: 0700	Time Shift Ending:1530
Project Number: 62599DM01		Contract/Task Order No.:
Client: USACE		Report By: Tyler Curley
Contractor(s): RMCI		Project Manager: Devon Jercinovic
Design Manager:		Oversight Manager: Tyler Curley
Design Engineer: George Nemeth		Site Engineer: Tyler Curley
Weather: Sunny 80° F		Logbook Number: NA
Personnel Onsite:	**Name:**	**Reason for Being Onsite:**
EA	Tyler Curley Kevin McKeage Earl Morse	Construction/safety oversight CQM Pipe test weld
USACE	Amy Sanchez	Oversight/Pipe test weld
RMCI	Ed Hyde Jerry Patton Phillip Johnson Felipe Hernandez Robert BeBault Jesus Moya Marcos Torres Monte Leiding Thomas Ascote	General Contractor
Wilson Electric	Britt Crooks Jaime Perez	Electrical Contractor
TLS	Robert Romero Sal Lazcano	Conveyance alignment survey
Bixby Electric	Bob Norton Manuel DeLion John Rejde Jasper Apachito	HDD Contractor (RMCI Sub)

Work Performed:

Planned Activities:

- Survey the piping alignment
- Begin trenching
- Begin pipe installation

Completed Activities:

- Surveyed the piping alignment
- Placed jersey barriers
- Potholed the SAS piping near Sta +5+25

Material Deliveries:

- HDD conveyance conduit (electrical/FO line)

• PVC electrical conduit • Quazite pull boxes
Construction Quality Control Activities or Samples Collected: • Material inspections
Observations or Possible Variations from Specifications: • None

Anticipated Activities for the Following Day:	
• Prep for HDD • Prep for trenching **Planned Material Deliveries:** • None	
Contractor Reports, Manifests, Documents Reviewed and Logged:	
None	
Report Completed By:	
Tyler Curley	Date: 02 October 2017

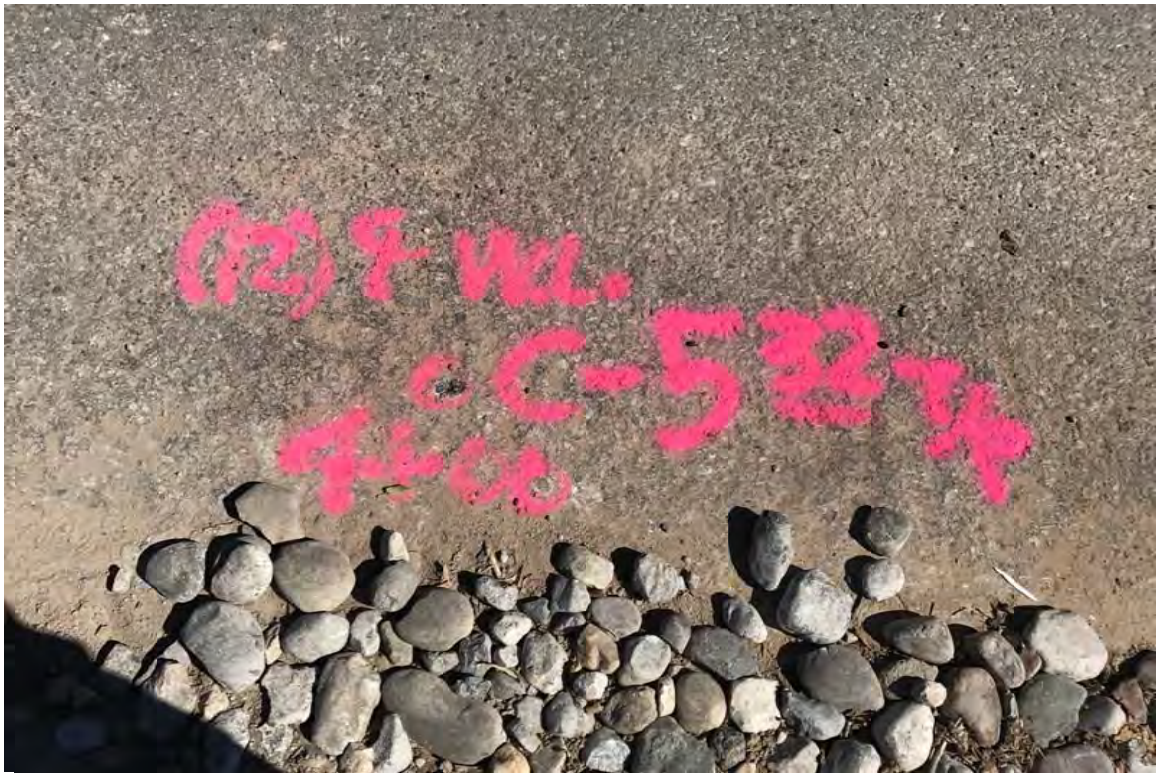
(12) 8" WL.
C-532
4+60

DAILY REPORT

(ATTACH ADDITIONAL SHEETS IF NECESSARY)

CONTRACT NAME:	Kirtland AFB Bulk Fuels Facility Expansion of Dissolved Plume GWTS Design	REPORT NO:	003
CONTRACT NUMBER:	W912DR-12-D-0006	REPORT DATE:	02 OCT 17
REVISION NUMBER:	-	REVISION DATE:	-
TASK ORDER NUMBER:	DM01	PROJECT NAME / LOCATION:	Kirtland BFF
PROJECT NUMBER:	62599DM01	PROJECT DESCRIPTION:	Installation of KAFB-106239 Conveyance Line
PROJECT MANAGER:	Devon Jercinovic	FIELD QUALITY MANAGER:	Kevin McKeever
CONSTRUCTION MANAGER:	Tyler Curley	SITE SAFETY MANAGER:	Tyler Curley

AM WEATHER:	Cool Clear	PM WEATHER:	Warm Clear	MAX TEMP (F):	80		

SUMMARY OF WORK PERFORMED TODAY

CQM Inspection of delivered conduit, piping, and test weld.

HEALTH AND SAFETY REPORT

SAFETY ACTIONS TAKEN TODAY/SAFETY INSPECTIONS CONDUCTED (Include Observations, Safety Violations, Corrective Instructions Given, Corrective Actions Taken, and Results of Safety Inspections Conducted:

See Construction Manager's Daily Report

TAILGATE TOPICS:

"

SAFE BEHAVIOR OBSERVATIONS/SELF-ASSESSMENTS:

"

OPERATIONS/PRODUCTION REPORT

WORK FORCE – CONTRACTOR AND SUBCONTRACTOR

Company	Cumulative Total of Work Hours From Previous Report	Total Hours Today	Total Work Hours From Start of Injection Event
See CM Daily Report			

EQUIPMENT ON HAND

Description of Equipment	Make/Model/ Manufacturer	Equipment ID Number	Inspection Performed By
Water Truck	Colorado Kenworth	4610	Robert Bebault
Loader	Volvo L-120	7310	Jesus Moya
Excavator	Komatsu PC-200	1107	Jesus Moya
HDPE Welder	McElroy Tracstar	8617	Jerry Patton
HDPE Welder	McElroy Tracstar	8618	Not in Use

COMMENTS (acceptance status, inspection findings, etc.):

OK

WORK AND/OR TESTS ACCOMPLISHED OR IN PROGRESS

Performed Work/Test for Today: See Construction Manager's Daily Report

Planned Work/Test for Tomorrow: "

Planned Work/Test for Next Week: "

CHANGED CONDITIONS/DELAY/CONFLICTS ENCOUNTERED (List any conflicts with the project [i.e., scope of work and/or drawings], delays to the project attributable to site and weather conditions, etc. ~~None~~ Amy Sanchez to witness test weld.

VISITORS AND DISCUSSIONS: See CM's Daily Report

QUALITY CONTROL REPORT

MATERIALS DELIVERED TO JOB SITE

Quantity/Volume/ Weight	Description of Materials Received	Make/Model/ Manufacturer	Material Lot Number	Inspection Performed By
5	Quazite boxes with Lids	—	—	KM
Various	HDPE 2" and 4" pipe	United Poly Systems	—	KM
Various	PVC 2" and 4" Conduit	Cantex	—	KM

COMMENTS (acceptance status, inspection findings, etc.):

INSPECTIONS PERFORMED

Task/Activity Inspected	Inspection Performed	Findings
Test Weld	Visual Inspection	OK.

TESTS PERFORMED

Task/Activity Tested	Test Performed	Test Results (Pass/Fail) - Criteria
Bend Test	90° Bend on 8 weld test strips	Pass (all 8)

QUALITY ISSUES AND RESOLUTIONS: None

SUBMITTALS INSPECTION / REVIEW

Submittal No.	Submittal Description	Specification/Plan Reference	Submittal Approved?		Comment/Reason/Action
NA	Daily Report	-	Yes ☐	No ☐	Pending
NA	SBO	-	Yes ☐	No ☐	Pending
NA	PTSP	-	Yes ☐	No ☐	Pending

REGULATORY COMPLIANCE REPORT

PERMIT INSPECTIONS PERFORMED: None

WASTE ACCUMULATION/STOCKPILE AREA INSPECTION

Inspection Performed By:	NA			Signature of Inspector:			
Accumulation / Stockpile Area Inspected:	NA						
No of Bins:		No of Tankers		No of Roll-Off Boxes:		No. of Tanks	

Inspection Results: NA

GENERAL COMMENTS

General Comments: (rework, directives, etc.): Test Well Accepted.

ATTACHMENTS

List of Attachments: (examples, as applicable: submittals, meeting minutes, safety meeting minutes, COCs, weight tickets, manifests, profiles, rework item list, RFIs, DCNs, photographs, etc.): Photo log.

NOTE: Write all entries legibly in ink. Line out all unused portions or designate as "not applicable". Preparer signs first and last name on each completed daily report. This form may be filled out electronically and signed electronically.

PREPARER'S SIGNATURE — DATE: 10/02/17

EA Engineering, Science, and Technology, Inc

Employee/Visitor Register and Safety Brief

Date: 10-2-17

Site Entry/Exit		Name (Printed)	Signature	Company
Time In	Time Out			
0700	1620	Tyler Curley		EA
0700	0835	Felipe Hernandez	Felipe Hernandez	RMCI
0700	1340	Robert BeBault	~~Rob~~ BeBault	RMCI
7:00	1340	Jesus Moya		RMCI
7:08	1340	Marcos Torres		RMCI
7:00	1600	Jerry Patton		RMCI
7:00	1600	~~Hyde~~ Hyde		RMCI
7:07	1100	Kevin McKaye		EA
7:13	0930	Thomas Acosta		RMCI
7:30	1445	Britt Crooks	BC	Wilson Elec
7:30	1445	Jaime Trevino Perez		Wilson Electric
0800	0900	Amy Sanchez	Amy Sanchez	USACE
0805	0910	Earl Moore		EA
8:45	1830	Robert Rangel		TLS
9:45	1830	Sal Lazcano		TLS
10:00	1030	Dexter Beaty		Core & Main
10:50	1140	Phillip Johnson		RMCI
10:50	1140	Bob Norton	Bob Norton	Bixby Electric

	on site	offsite
John Rojas	3:00 Bixby	1600
Jasper Apachito	3:00 Bixby	1600
Manuel Llerena	3:00 Bixby	1600

ENVIRONMENTAL MONITORING RECORD

SITE: KAFB-106239 Conveyance Line Installation

PROJECT NO.: 62599DM01

INSTRUMENT: Quest Noise Pro Thermo dust meter

Time	Monitoring Location	Reading (dB / mg/m³)	Corrective Action Taken[a]
1400	Cal check	114.4 / 0.000	
1413	Sta 1+00	65.6 / 0.009	
1416	Sta 5+00	71.3 / 0.006	

Comments: N = North, E = East, S = South, W = West

Reading were collected from the N side of Ridgecrest Dr

(a) Corrective actions taken must be documented whenever readings at or above action levels are reached. Monitoring equipment and action levels are specified in Section 9.33 of the Accident Prevention Plan.

Recorded By: Tyler Curley
Site Health & Safety Officer

Date: 10-02-17

EA ENGINEERING, SCIENCE AND TECHNOLOGY, INC.
SAFETY MEETING REPORT

Date: 10-3-17	**Time:** 0700	**Duration of meeting:** 10	**Project #** 605991M01
Location: KAFB Well 106239		**Task:** Conveyance Line Install	

Type of meeting: X **Daily** ____ **Weekly** ____ **Monthly** ____ **Other:**_____

Items/Issues discussed:

1. Slips / Trips / Falls
2. Crush hazards
3. Overhead Utilities
4. Proper PPE
5. Hospital Route

Attach minutes of safety meeting if taken.

Safety questions/issues raised:	Actions/Follow-up needed:
1. None	
2.	
3.	
4.	
5.	
6.	

Remarks:
None

Meeting conducted by:
Tyler Corley

EA Engineering, Science, and Technology, Inc.

DAILY SAFETY INSPECTION CHECKLIST
(TO BE COMPLETED EACH DAY OF CONSTRUCTION OR HTRW SITE ACTIVITIES)

Site: KAFB Well 106739
Location: Ridgecrest Dr.
Project No.: 62599 DM01
Client: USACE

Prepared by SSHO: Tyler Curley
Project Manager: Devon Jercinovic
Date : 10-2-17

Rating	Y	N	N/A	Comments/Immediate Corrective Action[1]
Accident Prevention Plan (APP) and Site Safety and Health Plan (SSHP) General Requirements				
Are there new onsite personnel? • Did they receive pre-entry briefing and are their names recorded in field logbook or daily log? • Was the USACE PM made aware of the new personnel. • Required training and medical surveillance documentation received (e.g., 40-hr, 8 hr, etc.)?	✓			
Did personnel sign in/out of site?	✓			
Daily tailgate safety meetings conducted and documented?	✓			
Were new activities performed today? Were hazards identified, discussed during the daily safety tailgate, and incorporated into revised APP/SSHP?		✓		
New materials brought on site? MSDSs available?	✓			
Exclusion (EZ), Contamination Reduction (CRZ), and Support Zones (SZ) delineated and enforced?	✓			
General housekeeping measures in place to prevent hazards?	✓			
Emergency Planning				
Were there any changes to emergency contact names, telephone numbers, or hospital? If so, were site personnel made aware and was information distributed/reposted.		✓		
Adequate safety equipment inventory available?	✓			
Fire extinguisher available (monthly inspection of extinguisher will suffice)	✓			
Eyewash station(s) functioning and in place (weekly inspection of eye wash station will suffice)?	✓			
First aid supplies available (weekly inspection of first aid kit will suffice)?	✓			
Communication equipment readily available for emergencies?	✓			
Any reported accidents/incidents at this site? If so, were accident reporting procedures followed?		✓		
Air Monitoring				
Monitoring equipment specified in SSHP available and in working order? Air monitoring instrumentation for this site includes – check each if required/on site, note deficiencies in comments: • Combustible gas meter • Organic vapor analyzer • Contaminant specific analyzer for benzene (if total organic vapor concentrations exceed 0.5 ppm)	✓			
Monitoring equipment calibrated and calibration records	✓			

Y = Satisfactory or Yes; N = Unsatisfactory or No, N/A = Not applicable

Rating	Y	N	N/A	Comments/Immediate Corrective Action[1]
available?				
Environmental and personnel monitoring performed as specified in SSHP?	✓			
PPE				
Proper dermal protection worn by EA and subcontracted employees when handling/ contacting hazardous chemicals or contaminated environmental media?	✓			
Required PPE (hard hats, safety boots / shoes, eye protection with side shields, hearing protection) being worn by EA and subcontracted employees?	✓			
PPE inspection completed by SSHO?	✓			
Drill Rig Operations				
Daily rig inspection completed? Any equipment problems?	✓			
Drill rigs/elevated equipment maintaining minimum 10-ft distance from energized (50 kV) overhead power lines?	✓			
Investigation-derived Waste (IDW)				
Wastes properly staged, secured, and labeled at end of day?			✓	

Additional Comments:

Site Safety and Health Officer's Signature

10-2-17

Date

[1]If a deficiency is noted that cannot be immediately corrected, the SSHO will monitor the progress in correcting the deficiency and will document following:

- Date the deficiency was identified
- Description of the deficiency
- Name of the person responsible for correcting the deficiency
- Projected date of correction
- Actual date of correction.

HEALTH AND SAFETY ACTIVITY REPORT

Site: KAFB well 106239 Location: Ridgecrest Dr

Weather Cond.: Sunny 80°F Onsite Hours: From 0700 To _____

Changes in PPE Levels[1]	Work Operations	Reasons for Change
None		

Site Safety and Health Plan Violations	Corrective Action Specified	Corrective Action Taken [2](yes/no)
None		

Observations and Comments:

None

Completed by: Tyler Curley Date: 10-2-17

Site Health and Safety Supervisor

[1]Only SSHO may change PPE levels, using only criteria specified in APP/SSHP.

[2]If a deficiency is noted that cannot be immediately corrected, the SSHO will monitor the progress in correcting the deficiency and will document following:

- Date the deficiency was identified
- Description of the deficiency
- Name of the person responsible for correcting the deficiency
- Projected date of correction
- Actual date of correction.

Fusion Weld Testing Form

Project: KAFB-106239 Conveyance Line
EA Project No: 62599DM01
Fusion Machine Model: McElroy TracStar
Length of Pipe Tested: Test Section

Date: 10/02/17
Operator: Jerry Patton

Inspection Results

Findings of visual inspection of weld bead: Bead is uniform and intact.

Findings of visual inspection of weld cross section: No indication of inclusions or vesicles.

Findings of visual inspection of test strips: Test strips do not show any issues with weld or weld bead.

Findings of bend test (4 attempts): Both 4" and 8" bend test succeeded with 4 out of 4 strips passing for each pipe diameter.

Is a new trial fusion required? No.

Signatures:

Accepted by Operator — Date: 10-2-17

Accepted by Construction Quality Inspector — Date: 10/02/17

Reviewed by Construction Quality Manager — Date: 10-04-17

From:	Curley, Tyler
To:	"Trent.Simpler@usace.army.mil"; "Amy.E.Sanchez@usace.army.mil"; "Carlos.F.Salazar@usace.army.mil"; "Linda.Dreeland@usace.army.mil"; "Mark.J.Phaneuf@usace.army.mil"
Cc:	Jercinovic, Devon; McKeage, Kevin; Ferrari, Peter; Rief, Lucas; Morse, Earl
Subject:	Activity Report for KAFB Well 106239 Conveyance Line Installation 3 October 2017
Date:	Tuesday, October 03, 2017 5:35:31 PM
Attachments:	Daily Field Activities Summary Report.pdf 004 CQM Report 03OCT17.pdf Photos 10-3-17.pdf

---

Issues Today Tuesday 3 October 2017:

- None

Resolution of Issues:

- None

Work Performed Today:

- Prep for HDD
- Bixby Electric potholed utilities near boring locations
- Welded 120 linear feet of HDPE for HDD under SAS line near Sta 5+25
- Prepped electrical conduit for HDD under SAS line near Sta 5+25

Installation Completion to Date: 1%

Work Planned for 4 Oct 2017:

- Prep for HDD
- Prep for trenching

Please let me know if you need additional information.

Tyler Curley, P.E.
EA Engineering, Science, and Technology, Inc., PBC
320 Gold Avenue, SW Suite 1300
Albuquerque, NM 87120
(505) 715-4422 work
(719) 688-9558 cell
tcurley@eaest.com

DAILY FIELD ACTIVITIES SUMMARY REPORT		
PROJECT NAME: KAFB Well 106239 Conveyance Line Installation		
Date: 10-03-17	Time Shift Beginning: 0700	Time Shift Ending:1530
Project Number: 62599DM01		Contract/Task Order No.:
Client: USACE		Report By: Tyler Curley
Contractor(s): RMCI		Project Manager: Devon Jercinovic
Design Manager:		Oversight Manager: Tyler Curley
Design Engineer: George Nemeth		Site Engineer: Tyler Curley
Weather: Sunny 80° F		Logbook Number: NA
Personnel Onsite:	**Name:**	**Reason for Being Onsite:**
EA	Tyler Curley Kevin McKeage Pete Ferrari	Construction/Safety Oversight Initial Phase Meeting Safety Oversight
USACE	Amy Sanchez	Initial Phase Meeting
RMCI	Ed Hyde Jerry Patton Phillip Johnson Felipe Hernandez Robert BeBault Jesus Moya Marcos Torres Thomas Ascote	General Contractor
Wilson Electric	Britt Crooks Jaime Perez	Electrical Contractor
Bixby Electric	Manuel DeLion John Rejde Jasper Apachito	HDD Contractor (RMCI Sub)

Work Performed:

Planned Activities:

- Prep for HDD
- Prep for trenching

Completed Activities:

- Prep for HDD
- Bixby Electric potholed utilities near boring locations
- Welded 120 linear feet of HDPE for HDD under SAS line near Sta 5+25
- Prepped electrical conduit for HDD under SAS line near Sta 5+25

Material Deliveries:

- None

Construction Quality Control Activities or Samples Collected:

- Initial Phase Meeting

Observations or Possible Variations from Specifications:

- None

Anticipated Activities for the Following Day:	
• Prep for HDD • Prep for trenching **Planned Material Deliveries:** • None	
Contractor Reports, Manifests, Documents Reviewed and Logged:	
None	
Report Completed By:	
Tyler Curley	Date: 03 October 2017

McELROY

DAILY REPORT

(ATTACH ADDITIONAL SHEETS IF NECESSARY)

CONTRACT NAME:	Kirtland AFB Bulk Fuels Facility Expansion of Dissolved Plume GWTS Design	REPORT NO:	004
CONTRACT NUMBER:	W912DR-12-D-0006	REPORT DATE:	03 OCT 17
REVISION NUMBER:	-	REVISION DATE:	-
TASK ORDER NUMBER:	DM01	PROJECT NAME / LOCATION:	Kirtland BFF
PROJECT NUMBER:	62599DM01	PROJECT DESCRIPTION:	Installation of KAFB-106239 Conveyance Line
PROJECT MANAGER:	Devon Jercinovic	FIELD QUALITY MANAGER:	Kevin McKenzie
CONSTRUCTION MANAGER:	Tyler Curley	SITE SAFETY MANAGER:	Tyler Curley

AM WEATHER:	Cool Clear	PM WEATHER:	Warm Clear	MAX TEMP (F):	81		

SUMMARY OF WORK PERFORMED TODAY

CQM Inspection of dual wall weld + Initial Phase Checklist meeting.

HEALTH AND SAFETY REPORT

SAFETY ACTIONS TAKEN TODAY/SAFETY INSPECTIONS CONDUCTED (Include Observations, Safety Violations, Corrective Instructions Given, Corrective Actions Taken, and Results of Safety Inspections Conducted:

See Construction Manager's Daily Report

TAILGATE TOPICS:

"

SAFE BEHAVIOR OBSERVATIONS/SELF-ASSESSMENTS:

"

OPERATIONS/PRODUCTION REPORT

WORK FORCE – CONTRACTOR AND SUBCONTRACTOR

Company	Cumulative Total of Work Hours From Previous Report	Total Hours Today	Total Work Hours From Start of Injection Event
See CM's Daily Report			

EQUIPMENT ON HAND

Description of Equipment	Make/Model/ Manufacturer	Equipment ID Number	Inspection Performed By
Water Truck	Colorado Kenworth	4610	Robert Bolduc
Loader	Volvo L-170	2310	Jesus Moya
Excavator	Komatsu PC-200	1107	Jesus Moya
HDPE Welder	McElroy Tracstar	8617	Jerry Potter
HDPE Welder	McElroy Tractor	8618	Not in use.

COMMENTS (acceptance status, inspection findings, etc.):

OK

WORK AND/OR TESTS ACCOMPLISHED OR IN PROGRESS

Performed Work/Test for Today: See Construction Manager's Daily Report

Planned Work/Test for Tomorrow: "

Planned Work/Test for Next Week: "

CHANGED CONDITIONS/DELAY/CONFLICTS ENCOUNTERED (List any conflicts with the project [i.e., scope of work and/or drawings], delays to the project attributable to site and weather conditions, etc. Any Sandez (USACE) for Initial Phase Meeting

VISITORS AND DISCUSSIONS: See CM's Daily Report

QUALITY CONTROL REPORT

MATERIALS DELIVERED TO JOB SITE

Quantity/Volume/ Weight	Description of Materials Received	Make/Model/ Manufacturer	Material Lot Number	Inspection Performed By
None				

COMMENTS (acceptance status, inspection findings, etc.):

INSPECTIONS PERFORMED

Task/Activity Inspected	Inspection Performed	Findings
Pipe Weld	Visual Inspection	Weld is consistent even with Wire pull through

TESTS PERFORMED

Task/Activity Tested	Test Performed	Test Results (Pass/Fail) - Criteria
None		

QUALITY ISSUES AND RESULTS: None, ~~test~~ Leak tape pull through wire does not effect the welding process

SUBMITTALS INSPECTION / REVIEW

Submittal No.	Submittal Description	Specification/Plan Reference	Submittal Approved?		Comment/Reason/Action
NA	Daily Report	-	Yes ☐	No ☐	Pending
NA	SBO	-	Yes ☐	No ☐	Pending
NA	PTSP	-	Yes ☐	No ☐	Pending

REGULATORY COMPLIANCE REPORT							
PERMIT INSPECTIONS PERFORMED: None							
WASTE ACCUMULATION/STOCKPILE AREA INSPECTION							
Inspection Performed By:	NA			Signature of Inspector:			
Accumulation / Stockpile Area Inspected:							
No of Bins:		No of Tankers		No of Roll-Off Boxes:		No. of Tanks	
Inspection Results: NA							
GENERAL COMMENTS							
General Comments: (rework, directives, etc.): Welds are not impacted by tracer wire pull through.							
ATTACHMENTS							
List of Attachments: (examples, as applicable: submittals, meeting minutes, safety meeting minutes, COCs, weight tickets, manifests, profiles, rework item list, RFIs, DCNs, photographs, etc.): Photo log							
NOTE: Write all entries legibly in ink. Line out all unused portions or designate as "not applicable". Preparer signs first and last name on each completed daily report. This form may be filled out electronically and signed electronically.				PREPARER'S SIGNATURE		DATE: 03OCT17	

EA Engineering, Science, and Technology, Inc

Employee/Visitor Register and Safety Brief

Date: 10-3-17

Site Entry/Exit		Name (Printed)	Signature	Company
Time In	Time Out			
0700	1536	Tyler Corley		EA
0700	1530	Felipe Hernandez	Felipe Hernandez	RMCI
700	1530	MARCOS TORRES		RMCI
0700	1530	Robert BeBault		RmcI
7:00	1530	Jesus Moya		RMCI
7:00	1530	Jerry Patton		RMCI
700	1530	Britt CROOKS		WILSON
700	0815	Amy Sanchez		USACE
700	1530	Jaime Trevizo Perez		Wilson Electric
705	0815	Kevin McKaye		EA
7:13	0750	Martin Barragan		Sequoia
7:30	1530	ED Wyse		RMCI
0720	1440	Pete Ferrari		EA
8:20	1440	John Rejde		Bixby
8:20	1440	Jasper Apachito		Bixby
10:47	1400	Thomas Acoste		RMCI
11:00	1440	Manuel DeLeon		Bixby
11:00	1105	Abe Sandoval		CAZ Testing

EA ENGINEERING, SCIENCE AND TECHNOLOGY, INC.
SAFETY MEETING REPORT

Date: 10-3-17	**Time:** 0700	**Duration of meeting:** 10	**Project #** 02599.M01
Location:		**Task:**	

Type of meeting: X **Daily** ____ **Weekly** ____ **Monthly** ____ **Other:**_____

Items/Issues discussed:

1. Traffic (motorized / foot)
2. Over head utilities
3. Pinch points
4. Proper PPE
5. Heat hazard (welder)

Attach minutes of safety meeting if taken.

Safety questions/issues raised:	**Actions/Follow-up needed:**
1. None	
2.	
3.	
4.	
5.	
6.	

Remarks: None

Meeting conducted by:
T. Curley

EA Engineering, Science, and Technology, Inc.

DAILY SAFETY INSPECTION CHECKLIST (TO BE COMPLETED EACH DAY OF CONSTRUCTION OR HTRW SITE ACTIVITIES)

Site: KAFB Well 106239
Location: ~~Work~~ Ridgecrest Dr
Project No.: 625998101
Client: USACE

Prepared by SSHO: Tyler Corley
Project Manager: Devon Jercinovic
Date: 10-3-17

Rating	Y	N	N/A	Comments/Immediate Corrective Action[1]
Accident Prevention Plan (APP) and Site Safety and Health Plan (SSHP) General Requirements				
Are there new onsite personnel? • Did they receive pre-entry briefing and are their names recorded in field logbook or daily log? • Was the USACE PM made aware of the new personnel. • Required training and medical surveillance documentation received (e.g., 40-hr, 8 hr, etc.)?		✓		
Did personnel sign in/out of site?	✓			
Daily tailgate safety meetings conducted and documented?	✓			
Were new activities performed today? Were hazards identified, discussed during the daily safety tailgate, and incorporated into revised APP/SSHP?		✓		
New materials brought on site? MSDSs available?		✓		
Exclusion (EZ), Contamination Reduction (CRZ), and Support Zones (SZ) delineated and enforced?	✓			
General housekeeping measures in place to prevent hazards?	✓			
Emergency Planning				
Were there any changes to emergency contact names, telephone numbers, or hospital? If so, were site personnel made aware and was information distributed/reposted.		✓		
Adequate safety equipment inventory available?	✓			
Fire extinguisher available (monthly inspection of extinguisher will suffice)	✓			
Eyewash station(s) functioning and in place (weekly inspection of eye wash station will suffice)?	✓			
First aid supplies available (weekly inspection of first aid kit will suffice)?	✓			
Communication equipment readily available for emergencies?	✓			
Any reported accidents/incidents at this site? If so, were accident reporting procedures followed?		✓		
Air Monitoring				
Monitoring equipment specified in SSHP available and in working order? Air monitoring instrumentation for this site includes – check each if required/on site, note deficiencies in comments: • Combustible gas meter • Organic vapor analyzer • Contaminant specific analyzer for benzene (if total organic vapor concentrations exceed 0.5 ppm)	✓			
Monitoring equipment calibrated and calibration records	✓			

Y = Satisfactory or Yes; N = Unsatisfactory or No, N/A = Not applicable

Rating	Y	N	N/A	Comments/Immediate Corrective Action[1]
available?				
Environmental and personnel monitoring performed as specified in SSHP?	✓			
PPE				
Proper dermal protection worn by EA and subcontracted employees when handling/ contacting hazardous chemicals or contaminated environmental media?	✓			
Required PPE (hard hats, safety boots / shoes, eye protection with side shields, hearing protection) being worn by EA and subcontracted employees?	✓			
PPE inspection completed by SSHO?	✓			
Drill Rig Operations				
Daily rig inspection completed? Any equipment problems?	✓			
Drill rigs/elevated equipment maintaining minimum 10-ft distance from energized (50 kV) overhead power lines?	✓			
Investigation-derived Waste (IDW)				
Wastes properly staged, secured, and labeled at end of day?			✓	

Additional Comments:

Site Safety and Health Officer's Signature

10-3-17

Date

[1]If a deficiency is noted that cannot be immediately corrected, the SSHO will monitor the progress in correcting the deficiency and will document following:

- Date the deficiency was identified
- Description of the deficiency
- Name of the person responsible for correcting the deficiency
- Projected date of correction
- Actual date of correction.

HEALTH AND SAFETY ACTIVITY REPORT

Site: KAFB Well 106739 Location: Ridgecrest

Weather Cond.: Sunny 80°F Onsite Hours: From 0700 To _____

Changes in PPE Levels[1]	Work Operations	Reasons for Change
None		

Site Safety and Health Plan Violations	Corrective Action Specified	Corrective Action Taken [2](yes/no)
None		

Observations and Comments:

None

Completed by: Tyler Curley Date: 10-3-17
Site Health and Safety Supervisor

[1]Only SSHO may change PPE levels, using only criteria specified in APP/SSHP.
[2]If a deficiency is noted that cannot be immediately corrected, the SSHO will monitor the progress in correcting the deficiency and will document following:

- Date the deficiency was identified
- Description of the deficiency
- Name of the person responsible for correcting the deficiency
- Projected date of correction
- Actual date of correction.

ENVIRONMENTAL MONITORING RECORD

SITE: KAFB-106239 Conveyance Line Installation

PROJECT NO.: 62599DM01

INSTRUMENT: Quest Noise Pro Thermo Dust Monitor

Time	Monitoring Location	Reading (dB / mg/m³)	Corrective Action Taken[a]
1340	Col Check	114.2 / 0.000	
1346 ~~1346~~	Sta 3+00	65.0 / 0.001	
1348	Sta 5+00	65.0 / 0.008	
1350	Sta 7+00	71.8 / 0.010	

Comments: N = North, E = East, S = South, W = West

(a) Corrective actions taken must be documented whenever readings at or above action levels are reached. Monitoring equipment and action levels are specified in Section 9.33 of the Accident Prevention Plan.

Recorded By: Tyler Curley
Site Health & Safety Officer

Date: 10-3-17

From:	Curley, Tyler
To:	"Trent.Simpler@usace.army.mil"; "Amy.E.Sanchez@usace.army.mil"; "Carlos.F.Salazar@usace.army.mil"; "Linda.Dreeland@usace.army.mil"; "Mark.J.Phaneuf@usace.army.mil"
Cc:	Jercinovic, Devon; McKeage, Kevin; Morse, Earl; Rief, Lucas
Subject:	Activity Report for KAFB Well 106239 Conveyance Line Installation 4 October 2017
Date:	Wednesday, October 04, 2017 6:18:53 PM
Attachments:	005 COM Daily Report 04OCT17.pdf Daily Field Activities Summary Report.pdf Photos 10-4-17.pdf

---

Issues Today Wednesday 4 October 2017:

- USACE expressed warranty concerns and weld integrity concerns regarding leak tightness associated with the placement of pull wire between the heating element and the conveyance piping during welding.
- Gasket material for flange faces is red rubber instead of PTFE

Resolution of Issues:

- Leak testing of the containment pipe utilizing the current welding method shall take place tomorrow 4 October 2017
- Material welding specifications are being obtained from the manufacturer
- RMCI has been notified that gasket material will need to be replaced with PTFE

Work Performed Today:

- Prep for HDD
- Bixby Electric potholed utilities near boring locations
- Welded 120 linear feet of HDPE for HDD under Ridgecrest Dr. near Sta 20+00
- Welded 100 linear feet of 2-inch and 4-inch HDPE conduit for HDD under Ridgecrest Dr. near Sta 20+00

Installation Completion to Date: 1%

Work Planned for 5 Oct 2017:

- Pressure testing of test weld
- Prep for trenching

Please let me know if you need additional information.

Tyler Curley, P.E.
EA Engineering, Science, and Technology, Inc., PBC
320 Gold Avenue, SW Suite 1300
Albuquerque, NM 87120
(505) 715-4422 work
(719) 688-9558 cell
tcurley@eaest.com

DAILY FIELD ACTIVITIES SUMMARY REPORT		
PROJECT NAME: KAFB Well 106239 Conveyance Line Installation		
Date: 10-04-17	Time Shift Beginning: 0700	Time Shift Ending:1530
Project Number: 62599DM01		Contract/Task Order No.:
Client: USACE		Report By: Tyler Curley
Contractor(s): RMCI		Project Manager: Devon Jercinovic
Design Manager:		Oversight Manager: Tyler Curley
Design Engineer: George Nemeth		Site Engineer: Tyler Curley
Weather: Sunny 80° F		Logbook Number: NA
Personnel Onsite:	**Name:**	**Reason for Being Onsite:**
EA	Tyler Curley Kevin McKeage Pete Ferrari Earl Morse	Construction/Safety Oversight Initial Phase Meeting Safety Oversight Oversight
USACE	Amy Sanchez Mark Phaeuf	Weld inspection
Wilson Electric	Britt Crooks Jaime Perez	Electrical Contractor
Bixby Electric	Manuel DeLion John Rejde Jasper Apachito	HDD Contractor (RMCI Sub)

Work Performed:

Planned Activities:

- Prep for HDD
- Prep for trenching

Completed Activities:

- Prep for HDD
- Bixby Electric potholed utilities near boring locations
- Welded 120 linear feet of HDPE for HDD under Ridgecrest Dr. near Sta 20+00
- Welded 100 linear feet of 2-inch and 4-inch HDPE conduit for HDD under Ridgecrest Dr. near Sta 20+00

Material Deliveries:

- None

Construction Quality Control Activities or Samples Collected:

- Material inspections

Observations or Possible Variations from Specifications:

- USACE expressed concerns regarding the pull wire being between the pipe and the heating plate during welding. It was recommended that a pressure test be performed to ensure weld integrity
- USACE expressed concerns that the current welding method may void the warranty of the conveyance line piping
- Gasket material for flange faces is red rubber instead of PTFE, proper gasket material is being obtained

Anticipated Activities for the Following Day:	
• Prep for HDD • Prep for trenching **Planned Material Deliveries:** • None	
Contractor Reports, Manifests, Documents Reviewed and Logged:	
None	
Report Completed By:	
Tyler Curley	Date: 04 October 2017

McELROY

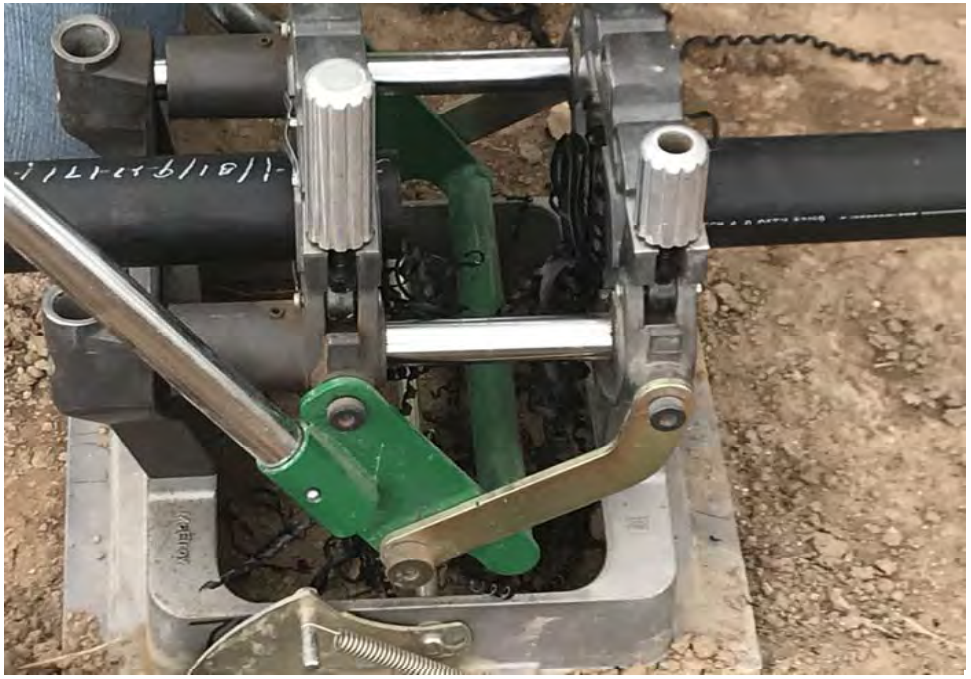

DAILY REPORT

(ATTACH ADDITIONAL SHEETS IF NECESSARY)

CONTRACT NAME:	Kirtland AFB Bulk Fuels Facility Expansion of Dissolved Plume GWTS Design	REPORT NO:	005
CONTRACT NUMBER:	W912DR-12-D-0006	REPORT DATE:	04 OCT 17
REVISION NUMBER:	-	REVISION DATE:	-
TASK ORDER NUMBER:	DM01	PROJECT NAME / LOCATION:	Kirtland BFF
PROJECT NUMBER:	62599DM01	PROJECT DESCRIPTION:	Installation of KAFB-106239 Conveyance Line
PROJECT MANAGER:	Devon Jercinovic	FIELD QUALITY MANAGER:	Kevin McKeage
CONSTRUCTION MANAGER:	Tyler Curley	SITE SAFETY MANAGER:	Tyler Curley

AM WEATHER:	Cool Mostly Cloudy	PM WEATHER:	Warm Cloudy	MAX TEMP (F):	78		

SUMMARY OF WORK PERFORMED TODAY

CQM Inspection of Delivered Materials (tracer wire, bolts, etc.)

HEALTH AND SAFETY REPORT

SAFETY ACTIONS TAKEN TODAY/SAFETY INSPECTIONS CONDUCTED (Include Observations, Safety Violations, Corrective Instructions Given, Corrective Actions Taken, and Results of Safety Inspections Conducted:

See Construction Manager's Daily Report

TAILGATE TOPICS:

"

SAFE BEHAVIOR OBSERVATIONS/SELF-ASSESSMENTS:

"

OPERATIONS/PRODUCTION REPORT

WORK FORCE – CONTRACTOR AND SUBCONTRACTOR

Company	Cumulative Total of Work Hours From Previous Report	Total Hours Today	Total Work Hours From Start of Injection Event
See CM's Daily Report			

EQUIPMENT ON HAND

Description of Equipment	Make/Model/ Manufacturer	Equipment ID Number	Inspection Performed By
Water Truck	Colorado Kenworth	4610	Robert Belault
Loader	Volvo L-120	2310	Jesus Moya
Excavator	Komatsu PC-200	1107	Jesus Moya
HDPE Welder	McElroy Tracstar	8617	Jerry Patton
HDPE Welder	McElroy Tracstar	8618	Not in Use

COMMENTS (acceptance status, inspection findings, etc.):

OK

WORK AND/OR TESTS ACCOMPLISHED OR IN PROGRESS

Performed Work/Test for Today: See Construction Manager's Daily Report

Planned Work/Test for Tomorrow: "

Planned Work/Test for Next Week: "

CHANGED CONDITIONS/DELAY/CONFLICTS ENCOUNTERED (List any conflicts with the project [i.e., scope of work and/or drawings], delays to the project attributable to site and weather conditions, etc. None

VISITORS AND DISCUSSIONS: Amy Sanchez and Mark Phoneut (USACE) to inspect Welding Process USACE requested a Pneumatic test of the outer pipe to ensure the pull wire is not affecting the weld.

QUALITY CONTROL REPORT

MATERIALS DELIVERED TO JOB SITE

Quantity/Volume/ Weight	Description of Materials Received	Make/Model/ Manufacturer	Material Lot Number	Inspection Performed By
2	Pipe Standoffs Saddle Support	Standoff/S92	–	KM
3500 feet	Tracer wire	Copperhead/AWG 10	–	KM
Various	Stainless steel bolts, nuts, and tracerwire connectors	Various	–	KM
1	Check valve	Mueller/8001	SCA10-07852	KM

COMMENTS (acceptance status, inspection findings, etc.): All items meet submittal requirements.

INSPECTIONS PERFORMED

Task/Activity Inspected	Inspection Performed	Findings
None		

TESTS PERFORMED

Task/Activity Tested	Test Performed	Test Results (Pass/Fail) - Criteria
None		

QUALITY ISSUES AND RESOLUTIONS: None

SUBMITTALS INSPECTION / REVIEW

Submittal No.	Submittal Description	Specification/Plan Reference	Submittal Approved?		Comment/Reason/Action
NA	Daily Report	–	Yes ☐	No ☐	Pending
NA	SBO	–	Yes ☐	No ☐	Pending
NA	PTSP	–	Yes ☐	No ☐	Pending

REGULATORY COMPLIANCE REPORT							
PERMIT INSPECTIONS PERFORMED: None							
WASTE ACCUMULATION/STOCKPILE AREA INSPECTION							
Inspection Performed By:	NA			Signature of Inspector:			
Accumulation / Stockpile Area Inspected:							
No of Bins:		No of Tankers		No of Roll-Off Boxes:		No. of Tanks	
Inspection Results: NA							
GENERAL COMMENTS							
General Comments: (rework, directives, etc.): EA is reviewing means of performing pneumatic test of the outter weld. Pneumatic testing will occur on 05OCT17							
ATTACHMENTS							
List of Attachments: (examples, as applicable: submittals, meeting minutes, safety meeting minutes, COCs, weight tickets, manifests, profiles, rework item list, RFIs, DCNs, photographs, etc.): Photo log + Weld Testing Form							
NOTE: Write all entries legibly in ink. Line out all unused portions or designate as "not applicable". Preparer signs first and last name on each completed daily report. This form may be filled out electronically and signed electronically.				PREPARER'S SIGNATURE		DATE: 04 OCT 17	

Location: Field Trailer
Description: Tracer Wire
Date: 04 October 2017 Direction: Down

Location: Field Trailer
Description: Tracer Wire Connectors
Date: 04 October 2017 Direction: Down

Location: Field Trailer
Description: Pipe Saddle Supports
Date: 04 October 2017 Direction: Down

Location: Field Trailer
Description: Stainless Steel Nuts and Bolts
Date: 04 October 2017 Direction: Down

Location: Field Trailer
Description: Junction Vault Check Valve
Date: 04 October 2017 Direction: South

Location: Field Trailer
Description: Tracer Wire Specifications
Date: 04 October 2017 Direction: Down

Fusion Weld Testing Form

Project: KAFB-106239 Conveyance Line
EA Project No: 62599DM01
Fusion Machine Model: McElroy TracStar
Length of Pipe Tested: Test Section

Date: 10/02/17
Operator: Jerry Patton

Inspection Results

Findings of visual inspection of weld bead: Bead is uniform and intact.

Findings of visual inspection of weld cross section: No indication of inclusions or vesicles.

Findings of visual inspection of test strips: Test strips do not show any issues with weld or weld bend.

Findings of bend test (4 attempts): Both 4" and 8" bend test succeeded with 4 out of 4 strips passing for each pipe diameter.

Is a new trial fusion required? No.

Signatures:

Accepted by Operator — Date: 10-2-17

Accepted by Construction Quality Inspector — Date: 10/02/17

Reviewed by Construction Quality Manager — Date: 10-04-17

EA Engineering, Science, and Technology, Inc

Employee/Visitor Register and Safety Brief

Date: 10-11-17

Site Entry/Exit		Name (Printed)	Signature	Company
Time In	Time Out			
7:00	1530	Jesus Moya		RMCI
7:00	1530	MARCOS TORRES		RM. CI
7:00	1530	Robert BeBault		RmcI
0700	1600	Tyler Curley		EA
0700	0730	Earl Morse		EA
7:00	1600	ED Hyde		RMCI
7:00	1600	Jerry Patton		RmcI
7:00	0745	Martin Barragan		Sequoia
8:00	1045	Manuel DeLeon		Bixby
8:00	1045	Jasper Apachito		Bixby
8:00	1045	John Reide		Bixby
0805	0940	Pete Ferraro		EA
0940	0925	Phillip Johnson		EMCI
0850	0925	Kevin McKeage		EA
10:20	1530	Felipe H		RMCI
11:08	1135	Amy Sanchez		USACE
11 08	1135	Mark Phaneuf		USACE

EA ENGINEERING, SCIENCE AND TECHNOLOGY, INC.
SAFETY MEETING REPORT

Date: 10-4-17	**Time:** 0700	**Duration of meeting:** 10	**Project #** 62599.0101
Location: KAFB Well 106239		**Task:** Conveyance Line Install	

Type of meeting: _X_ Daily ____Weekly ____ Monthly ____ Other:_____

Items/Issues discussed:

1. Traffic (motorized/foot), Proper flagging
2. Pinch points
3. Heat points on welder
4. Heavy machinery
5.

Attach minutes of safety meeting if taken.

Safety questions/issues raised:	Actions/Follow-up needed:
1. None	
2.	
3.	
4.	
5.	
6.	

Remarks: None

Meeting conducted by:
Tyler Curley

EA Engineering, Science, and Technology, Inc.

DAILY SAFETY INSPECTION CHECKLIST
(TO BE COMPLETED EACH DAY OF CONSTRUCTION OR HTRW SITE ACTIVITIES)

Site: KAFB Well 106039
Location: Ridgecrest Dr
Project No.: G03990M01
Client: USACE

Prepared by SSHO: Tyler Curley
Project Manager: Devon Jercinovic
Date: 10-4-17

Rating	Y	N	N/A	Comments/Immediate Corrective Action[1]
Accident Prevention Plan (APP) and Site Safety and Health Plan (SSHP) General Requirements				
Are there new onsite personnel? • Did they receive pre-entry briefing and are their names recorded in field logbook or daily log? • Was the USACE PM made aware of the new personnel. • Required training and medical surveillance documentation received (e.g., 40-hr, 8 hr, etc.)?		✓		
Did personnel sign in/out of site?	✓			
Daily tailgate safety meetings conducted and documented?	✓			
Were new activities performed today? Were hazards identified, discussed during the daily safety tailgate, and incorporated into revised APP/SSHP?		✓		
New materials brought on site? MSDSs available?		✓		
Exclusion (EZ), Contamination Reduction (CRZ), and Support Zones (SZ) delineated and enforced?	✓			
General housekeeping measures in place to prevent hazards?	✓			
Emergency Planning				
Were there any changes to emergency contact names, telephone numbers, or hospital? If so, were site personnel made aware and was information distributed/reposted.		✓		
Adequate safety equipment inventory available?	✓			
Fire extinguisher available (monthly inspection of extinguisher will suffice)	✓			
Eyewash station(s) functioning and in place (weekly inspection of eye wash station will suffice)?	✓			
First aid supplies available (weekly inspection of first aid kit will suffice)?	✓			
Communication equipment readily available for emergencies?	✓			
Any reported accidents/incidents at this site? If so, were accident reporting procedures followed?				
Air Monitoring				
Monitoring equipment specified in SSHP available and in working order? Air monitoring instrumentation for this site includes – check each if required/on site, note deficiencies in comments: • Combustible gas meter • Organic vapor analyzer • Contaminant specific analyzer for benzene (if total organic vapor concentrations exceed 0.5 ppm)	✓			No noise monitoring, meter malfunction
Monitoring equipment calibrated and calibration records	✓			

Y = Satisfactory or Yes; N = Unsatisfactory or No, N/A = Not applicable

Rating	Y	N	N/A	Comments/Immediate Corrective Action[1]
available?				
Environmental and personnel monitoring performed as specified in SSHP?	✓			
PPE				
Proper dermal protection worn by EA and subcontracted employees when handling/ contacting hazardous chemicals or contaminated environmental media?	✓			
Required PPE (hard hats, safety boots / shoes, eye protection with side shields, hearing protection) being worn by EA and subcontracted employees?	✓			
PPE inspection completed by SSHO?	✓			
Drill Rig Operations				
Daily rig inspection completed? Any equipment problems?	✓			
Drill rigs/elevated equipment maintaining minimum 10-ft distance from energized (50 kV) overhead power lines?	✓			
Investigation-derived Waste (IDW)				
Wastes properly staged, secured, and labeled at end of day?			✓	

Additional Comments:

Site Safety and Health Officer's Signature

10-4-17

Date

[1]If a deficiency is noted that cannot be immediately corrected, the SSHO will monitor the progress in correcting the deficiency and will document following:

- Date the deficiency was identified
- Description of the deficiency
- Name of the person responsible for correcting the deficiency
- Projected date of correction
- Actual date of correction.

HEALTH AND SAFETY ACTIVITY REPORT

Site: KAFB Well 106739 Location: Ridgecrest Dr

Weather Cond.: Sunny 80°F Onsite Hours: From 0700 To 1545

Changes in PPE Levels[1]	Work Operations	Reasons for Change
None		

Site Safety and Health Plan Violations	Corrective Action Specified	Corrective Action Taken [2](yes/no)
None		

Observations and Comments:

None

Completed by: Tyler Curley Date: 10-21-17

Site Health and Safety Supervisor

[1]Only SSHO may change PPE levels, using only criteria specified in APP/SSHP.

[2]If a deficiency is noted that cannot be immediately corrected, the SSHO will monitor the progress in correcting the deficiency and will document following:

- Date the deficiency was identified
- Description of the deficiency
- Name of the person responsible for correcting the deficiency
- Projected date of correction
- Actual date of correction.

ENVIRONMENTAL MONITORING RECORD

SITE: KAFB-106239 Conveyance Line Installation

PROJECT NO.: 62599DM01

INSTRUMENT: Thermo Dust Monitor

Time	Monitoring Location	Reading (mg/m^3)	Corrective Action Taken[(a)]
1030	Cal check	0000	
1045	Sta 19+00	0.013	
1046	Sta 20+00	0.015	
1047	Sta 21+00	0.012	
1047	Sta 22+00	0.013	

Comments: N = North, E = East, S = South, W = West

Noise meter malfunctioned

(a) Corrective actions taken must be documented whenever readings at or above action levels are reached. Monitoring equipment and action levels are specified in Section 9.33 of the Accident Prevention Plan.

Recorded By: Tyler Curley Date: 10-4-17

Site Health & Safety Officer

From:	Morse, Earl
To:	Simpler, Trent SPA; Amy Sanchez; Carlos Salazar; Linda Dreeland; Phaneuf, Mark J SPA (Mark.J.Phaneuf@usace.army.mil)
Cc:	Jercinovic, Devon; McKeage, Kevin; Ferrari, Peter; Curley, Tyler; Rief, Lucas
Subject:	Activity Report for KAFB Well 106239 Conveyance Line Installation 5 October 2017
Date:	Thursday, October 05, 2017 4:53:19 PM
Attachments:	Daily Field Activities Summary Report 10-5-17.pdf 006 CQM Daily Report 05OCT17.pdf Photo_log006.pdf

---

Issues Today Thursday 5 October 2017:

- None

Resolution of Issues:

- None

Work Performed Today:

- Successful weld and air pressure test of 8" HDPE pipe
- Staged HDPE pipe at the east end of Ridgecrest Drive
- Staged HDPE pipe on-base east of Louisiana Blvd
- Continued removal of tree stumps
- Delivery of a backhoe

Installation Completion to Date: 1%

Work Planned for 6 Oct 2017:

- Continued tree stump removal
- Prep for trenching

Earl L. Morse, MS, PG
EA Engineering, Science, and Technology, Inc., PBC
Project Manager/Senior Geologist
320 Gold Ave. SW, Suite 1300
Albuquerque, NM 87102
Cell: 505.238-4410
Office: 505.715.4275
Email: emorse@eaest.com
www.eaest.com

DAILY FIELD ACTIVITIES SUMMARY REPORT		
PROJECT NAME: KAFB Well 106239 Conveyance Line Installation		
Date: 10-05-17	Time Shift Beginning: 0700	Time Shift Ending:1530
Project Number: 62599DM01		Contract/Task Order No.:
Client: USACE		Report By: Earl Morse
Contractor(s): RMCI		Project Manager: Devon Jercinovic
Design Manager:		Oversight Manager: Earl Morse
Design Engineer: George Nemeth		Site Engineer: Kevin McKeage
Weather: Cloudy, humid 71° F		Logbook Number: NA
Personnel Onsite:	**Name:**	**Reason for Being Onsite:**
EA	Earl Morse Kevin McKeage	Construction/Safety Oversight Construction/Testing Engineer
USACE	Amy Sanchez	Weld/Pressure Test inspection
Sequoia	Martin Barrager	Tree stump disposal

Work Performed:

Planned Activities:

- Weld and air pressure test of dual-wall HPDE
- Prep for HDD
- Prep for trenching

Completed Activities:

- Successfully completed field weld and air pressure test
- Prep for HDD
- Transported 8”, 4” and 2”-diameter HDPE pipe to east end of Ridgecrest Road
- Transported 8”, 4” and 2”-diameter HDPE pipe on base.
- Delivery of backhoe (Deere 310)
- Sequoia hauled four loads of tree stumps for disposal

Material Deliveries:

- None

Construction Quality Control Activities or Samples Collected:

- Oversight of weld and air pressure test

Observations or Possible Variations from Specifications:

- None

Anticipated Activities for the Following Day:

- Prep for HDD
- Prep for trenching

Planned Material Deliveries:

- None

Contractor Reports, Manifests, Documents Reviewed and Logged:	
None	
Report Completed By:	
Earl Morse	Date: 05 October 2017

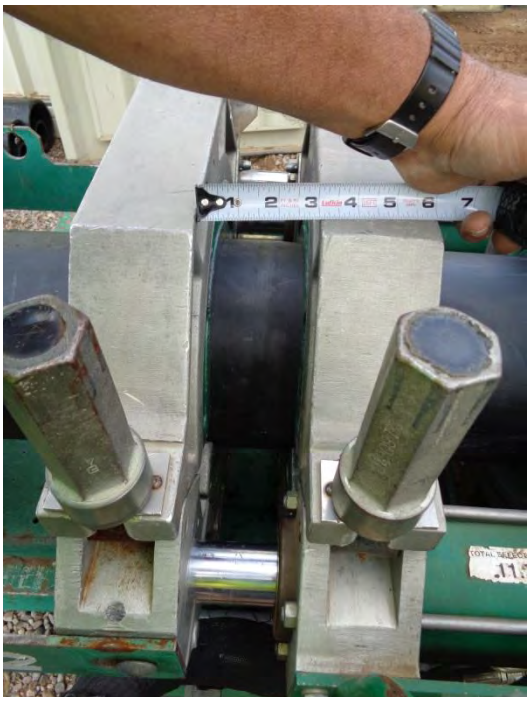

Location: Field Trailer
Description: Spacing of Pipe Prior to Welding
Date: 05 October 2017 Direction: West

Location: Field Trailer
Description: Spacing of Following Welding
Date: 05 October 2017 Direction: West

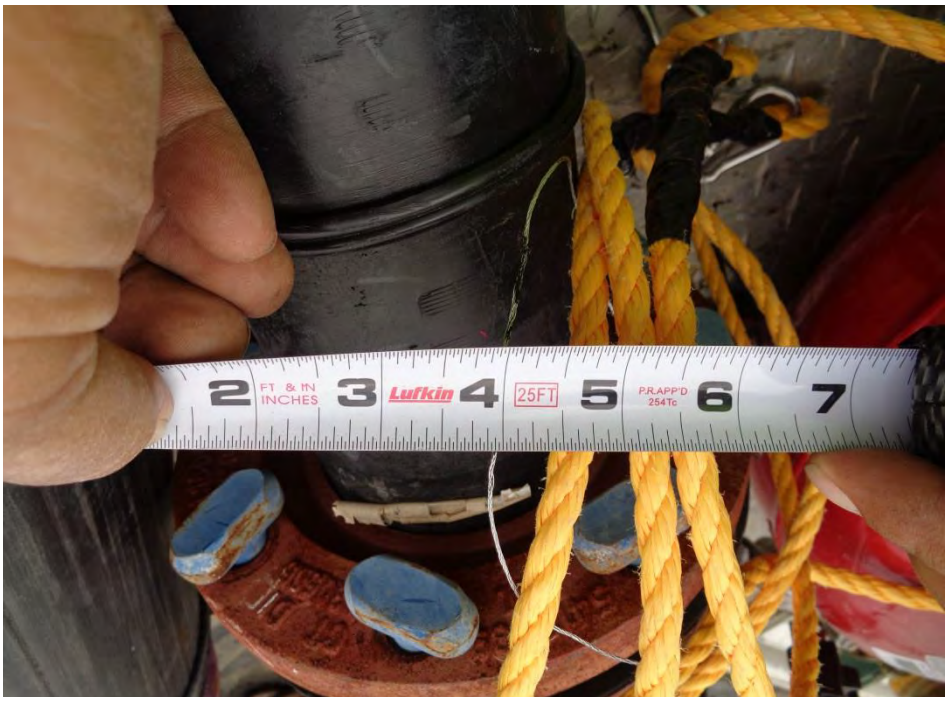

Location: Field Trailer
Description: Thickness of Pull Wire
Date: 05 October 2017 Direction: Down

Location: Field Trailer
Description: Pressure Test Setup
Date: 05 October 2017 Direction: Northwest

Location: Field Trailer
Description: Initial Pressure Gauge Reading
Date: 05 October 2017 Direction: Down

Location: Field Trailer
Description: Pressure Gauge Reading Ten Minutes After Initial Reading
Date: 05 October 2017 Direction: Down

Location: Field Trailer
Description: Interior Weld Marks From Pull Wire
Date: 05 October 2017 Direction: Down

Location: Field Trailer
Description: Bend Test Performed on Weld with Pull Wire Marks
Date: 05 October 2017 Direction: Down

DAILY REPORT

(ATTACH ADDITIONAL SHEETS IF NECESSARY)

CONTRACT NAME:	Kirtland AFB Bulk Fuels Facility Expansion of Dissolved Plume GWTS Design	REPORT NO:	006
CONTRACT NUMBER:	W912DR-12-D-0006	REPORT DATE:	05 OCT 17
REVISION NUMBER:	-	REVISION DATE:	-
TASK ORDER NUMBER:	DM01	PROJECT NAME / LOCATION:	Kirtland BFF
PROJECT NUMBER:	62599DM01	PROJECT DESCRIPTION:	Installation of KAFB-106239 Conveyance Line
PROJECT MANAGER:	Devon Jercinovic	FIELD QUALITY MANAGER:	Kevin McKeage
CONSTRUCTION MANAGER:	Tyler Curley	SITE SAFETY MANAGER:	Tyler Curley

AM WEATHER:	Cool Cloudy	PM WEATHER:	Warm Cloudy	MAX TEMP (F):	76		

SUMMARY OF WORK PERFORMED TODAY

Dual-Walled Conveyance Line Leak Detection Test Weld and Pneumatic Pressure Test.

HEALTH AND SAFETY REPORT

SAFETY ACTIONS TAKEN TODAY/SAFETY INSPECTIONS CONDUCTED (Include Observations, Safety Violations, Corrective Instructions Given, Corrective Actions Taken, and Results of Safety Inspections Conducted:

See Construction Manager's Daily Report

TAILGATE TOPICS:

"

SAFE BEHAVIOR OBSERVATIONS/SELF-ASSESSMENTS:

"

OPERATIONS/PRODUCTION REPORT

WORK FORCE – CONTRACTOR AND SUBCONTRACTOR

Company	Cumulative Total of Work Hours From Previous Report	Total Hours Today	Total Work Hours From Start of Injection Event
See CM's Daily Report			

EQUIPMENT ON HAND

Description of Equipment	Make/Model/ Manufacturer	Equipment ID Number	Inspection Performed By
Water Truck	Colorado Kenworth	4610	Robert Bernault
Loader	Volvo L-120	7310	Jesus Moya
Excavator	Komatsu PC-200	1107	Jesus Moya
HDPE Welder	McElroy Tracstar	8617	Jerry Patton
HDPE Welder	McElroy Tracstar	8618	Not in Use

COMMENTS (acceptance status, inspection findings, etc.):

OK

WORK AND/OR TESTS ACCOMPLISHED OR IN PROGRESS

Performed Work/Test for Today: See Construction Manager's Daily Report

Planned Work/Test for Tomorrow: "

Planned Work/Test for Next Week: "

CHANGED CONDITIONS/DELAY/CONFLICTS ENCOUNTERED (List any conflicts with the project [i.e., scope of work and/or drawings], delays to the project attributable to site and weather conditions, etc. None

VISITORS AND DISCUSSIONS: Any Sanchez to witness test weld and Pressure test.

QUALITY CONTROL REPORT

MATERIALS DELIVERED TO JOB SITE

Quantity/Volume/ Weight	Description of Materials Received	Make/Model/ Manufacturer	Material Lot Number	Inspection Performed By
None				

COMMENTS (acceptance status, inspection findings, etc.): NA

INSPECTIONS PERFORMED

Task/Activity Inspected	Inspection Performed	Findings
Test Weld		

TESTS PERFORMED

Task/Activity Tested	Test Performed	Test Results (Pass/Fail) - Criteria
Pneumatic Pressure	8" line hold 6psi for 10minutes	Pass
Bend	Weld with metal wire	Pass

QUALITY ISSUES AND RESOLUTIONS:

SUBMITTALS INSPECTION / REVIEW

Submittal No.	Submittal Description	Specification/Plan Reference	Submittal Approved?		Comment/Reason/Action
NA	Daily Report	-	Yes ☐	No ☐	Pending
NA	SBO	-	Yes ☐	No ☐	Pending
NA	PTSP	-	Yes ☐	No ☐	Pending

REGULATORY COMPLIANCE REPORT							
PERMIT INSPECTIONS PERFORMED: None							
WASTE ACCUMULATION/STOCKPILE AREA INSPECTION							
Inspection Performed By:	NA			Signature of Inspector:			
Accumulation / Stockpile Area Inspected:							
No of Bins:		No of Tankers		No of Roll-Off Boxes:		No. of Tanks	
Inspection Results: NA							
GENERAL COMMENTS							
General Comments: (rework, directives, etc.): The leak detection was pull + Solid Plate weld passed inspection and both tests.							
ATTACHMENTS							
List of Attachments: (examples, as applicable: submittals, meeting minutes, safety meeting minutes, COCs, weight tickets, manifests, profiles, rework item list, RFIs, DCNs, photographs, etc.): Photo log							
NOTE: Write all entries legibly in ink. Line out all unused portions or designate as "not applicable". Preparer signs first and last name on each completed daily report. This form may be filled out electronically and signed electronically.				PREPARER'S SIGNATURE		DATE: 05 OCT 17	

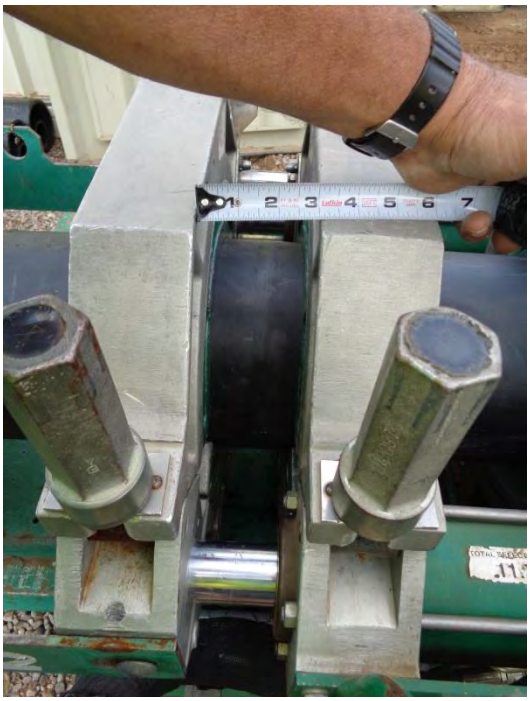

Location: Field Trailer
Description: Spacing of Pipe Prior to Welding
Date: 05 October 2017 Direction: West

Location: Field Trailer
Description: Spacing of Following Welding
Date: 05 October 2017 Direction: West

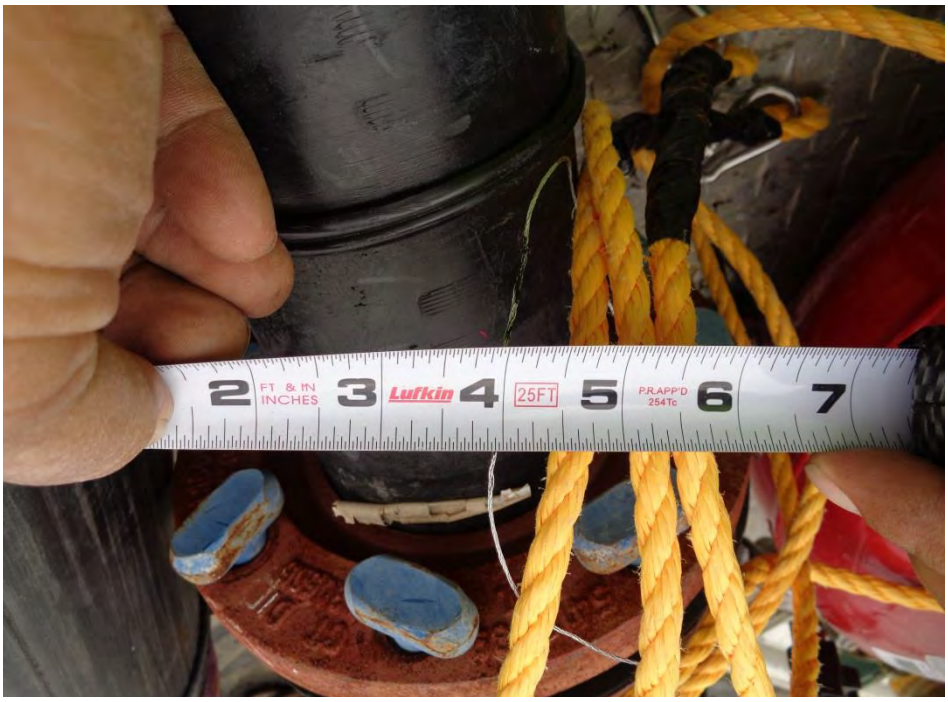

Location: Field Trailer
Description: Thickness of Pull Wire
Date: 05 October 2017 Direction: Down

Location: Field Trailer
Description: Pressure Test Setup
Date: 05 October 2017 Direction: Northwest

Location: Field Trailer
Description: Initial Pressure Gauge Reading
Date: 05 October 2017 Direction: Down

Location: Field Trailer
Description: Pressure Gauge Reading Ten Minutes After Initial Reading
Date: 05 October 2017 Direction: Down

Location: Field Trailer
Description: Interior Weld Marks From Pull Wire
Date: 05 October 2017 Direction: Down

Location: Field Trailer
Description: Bend Test Performed on Weld with Pull Wire Marks
Date: 05 October 2017 Direction: Down

EA Engineering, Science, and Technology, Inc

Employee/Visitor Register and Safety Brief				
Date: 10-5-2017				
Site Entry/Exit		Name (Printed)	Signature	Company
Time In	Time Out			
0745	1530	Earl Morse		EA
0700	1570	Robert BeBault		RMCI
7:00	1570	MARCOS TORRES		RMCI
7:00	1530	Jesus Moyer		RMCI
7:00	1530	Felipe Hernandez	Felipe Hernandez	RMCI
8:05	11:00	Kevin McKenzie		EA
8:05	10:40	Amy Sanchez		USACE

EA ENGINEERING, SCIENCE AND TECHNOLOGY, INC.
SAFETY MEETING REPORT

Date: 10-5-2017	**Time:** 0745	**Duration of meeting:** 10	**Project #** 62599.0001.1009
Location: 106239 Conveyance Line		**Task:** Proof of Process Test	

Type of meeting: X **Daily** ___ **Weekly** ___ **Monthly** ___ **Other:** _____

Items/Issues discussed:

1. Weather - rain
2. Slip, trip, fall
3. Working around welding equipment
4. Heavy Equipment ops
5.

Attach minutes of safety meeting if taken.

Safety questions/issues raised:	Actions/Follow-up needed:
1. RMCI has 10 mile lightning radius	—
2. For stop work	
3.	
4.	
5.	
6.	

Remarks: None

Meeting conducted by: Earl Morse

EA Engineering, Science, and Technology, Inc.

DAILY SAFETY INSPECTION CHECKLIST (TO BE COMPLETED EACH DAY OF CONSTRUCTION OR HTRW SITE ACTIVITIES)

Site: 106239 Conveyance Line
Location: VA Contractor Yard
Project No.: 62599DM01.1009
Client: USACE

Prepared by SSHO: Earl Morse
Project Manager: Devon Jancinovic
Date: 10-5-2017

Rating	Y	N	N/A	Comments/Immediate Corrective Action[1]
Accident Prevention Plan (APP) and Site Safety and Health Plan (SSHP) General Requirements				
Are there new onsite personnel? • Did they receive pre-entry briefing and are their names recorded in field logbook or daily log? • Was the USACE PM made aware of the new personnel. • Required training and medical surveillance documentation received (e.g., 40-hr, 8 hr, etc.)?		✓		
Did personnel sign in/out of site?	✓			
Daily tailgate safety meetings conducted and documented?	✓			
Were new activities performed today? Were hazards identified, discussed during the daily safety tailgate, and incorporated into revised APP/SSHP?	✓			Pressure test
New materials brought on site? MSDSs available?		✓		
Exclusion (EZ), Contamination Reduction (CRZ), and Support Zones (SZ) delineated and enforced?			✓	
General housekeeping measures in place to prevent hazards?	✓			
Emergency Planning				
Were there any changes to emergency contact names, telephone numbers, or hospital? If so, were site personnel made aware and was information distributed/reposted.		✓		
Adequate safety equipment inventory available?	✓			
Fire extinguisher available (monthly inspection of extinguisher will suffice)	✓			
Eyewash station(s) functioning and in place (weekly inspection of eye wash station will suffice)?	✓			
First aid supplies available (weekly inspection of first aid kit will suffice)?	✓			
Communication equipment readily available for emergencies?	✓			
Any reported accidents/incidents at this site? If so, were accident reporting procedures followed?		✓		
Air Monitoring				
Monitoring equipment specified in SSHP available and in working order? Air monitoring instrumentation for this site includes – check each if required/on site, note deficiencies in comments: • Combustible gas meter • Organic vapor analyzer • Contaminant specific analyzer for benzene (if total organic vapor concentrations exceed 0.5 ppm)			✓	
Monitoring equipment calibrated and calibration records				

Y = Satisfactory or Yes; N = Unsatisfactory or No, N/A = Not applicable

Rating	Y	N	N/A	Comments/Immediate Corrective Action[1]
available?			✓	
Environmental and personnel monitoring performed as specified in SSHP?	✓			
PPE				
Proper dermal protection worn by EA and subcontracted employees when handling/ contacting hazardous chemicals or contaminated environmental media?	✓			
Required PPE (hard hats, safety boots / shoes, eye protection with side shields, hearing protection) being worn by EA and subcontracted employees?	✓			
PPE inspection completed by SSHO?	✓			
Drill Rig Operations				
Daily rig inspection completed? Any equipment problems?			✓	
Drill rigs/elevated equipment maintaining minimum 10-ft distance from energized (50 kV) overhead power lines?			✓	
Investigation-derived Waste (IDW)				
Wastes properly staged, secured, and labeled at end of day?	✓			

Additional Comments:

Site Safety and Health Officer's Signature

10-5-2017

Date

[1]If a deficiency is noted that cannot be immediately corrected, the SSHO will monitor the progress in correcting the deficiency and will document following:

- Date the deficiency was identified
- Description of the deficiency
- Name of the person responsible for correcting the deficiency
- Projected date of correction
- Actual date of correction.

HEALTH AND SAFETY ACTIVITY REPORT

Site: 106239 Conveyance Line Location: VA yard

Weather Cond.: Cloudy/Warm Onsite Hours: From 0645 To 1530

Changes in PPE Levels[1]	Work Operations	Reasons for Change
None	Weld test/pressure test	N/A

Site Safety and Health Plan Violations	Corrective Action Specified	Corrective Action Taken [2](yes/no)
None		

Observations and Comments:

None

Completed by: Earl Morse Date: 10/5/17

Site Health and Safety Supervisor

[1]Only SSHO may change PPE levels, using only criteria specified in APP/SSHP.

[2]If a deficiency is noted that cannot be immediately corrected, the SSHO will monitor the progress in correcting the deficiency and will document following:

- Date the deficiency was identified
- Description of the deficiency
- Name of the person responsible for correcting the deficiency
- Projected date of correction
- Actual date of correction.

DAILY FIELD ACTIVITIES SUMMARY REPORT		
PROJECT NAME: KAFB Well 106239 Conveyance Line Installation		
Date: 10-05-17	Time Shift Beginning: 0700	Time Shift Ending: 1530
Project Number: 62599DM01		Contract/Task Order No.:
Client: USACE		Report By: Earl Morse
Contractor(s): RMCI		Project Manager: Devon Jercinovic
Design Manager:		Oversight Manager: Earl Morse
Design Engineer: George Nemeth		Site Engineer: Kevin McKeage
Weather: Cloudy, humid 71° F		Logbook Number: NA
Personnel Onsite:	**Name:**	**Reason for Being Onsite:**
EA	Earl Morse Kevin McKeage	Construction/Safety Oversight Construction/Testing Engineer
USACE	Amy Sanchez	Weld/Pressure Test inspection
Sequoia	Martin Barrager	Tree stump disposal

Work Performed:

Planned Activities:

- Weld and air pressure test of dual-wall HPDE
- Prep for HDD
- Prep for trenching

Completed Activities:

- Successfully completed field weld and air pressure test
- Prep for HDD
- Transported 8", 4" and 2"-diameter HDPE pipe to east end of Ridgecrest Road
- Transported 8", 4" and 2"-diameter HDPE pipe on base.
- Delivery of backhoe (Deere 310)
- Sequoia hauled four loads of tree stumps for disposal

Material Deliveries:

- None

Construction Quality Control Activities or Samples Collected:

- Oversight of weld and air pressure test

Observations or Possible Variations from Specifications:

- None

Anticipated Activities for the Following Day:

- Prep for HDD
- Prep for trenching

Planned Material Deliveries: • None
Contractor Reports, Manifests, Documents Reviewed and Logged:
None
Report Completed By:
Earl Morse — Date: 05 October 2017

ENVIRONMENTAL MONITORING RECORD

SITE: KAFB-106239 Conveyance Line Installation

PROJECT NO.: 62599DM01

INSTRUMENT: _____

Time	Monitoring Location	Reading	Corrective Action Taken[a]
	None - too moist for dust monitoring		

Comments: N = North, E = East, S = South, W = West

(a) Corrective actions taken must be documented whenever readings at or above action levels are reached. Monitoring equipment and action levels are specified in Section 9.33 of the Accident Prevention Plan.

Recorded By: Gail Morse
Site Health & Safety Officer

Date: 10-5-2017

From:	Curley, Tyler
To:	"Trent.Simpler@usace.army.mil"; "Amy.E.Sanchez@usace.army.mil"; "Carlos.F.Salazar@usace.army.mil"; "Linda.Dreeland@usace.army.mil"; "Mark.J.Phaneuf@usace.army.mil"
Cc:	Jercinovic, Devon; McKeage, Kevin; Morse, Earl; Ferrari, Peter; Rief, Lucas
Subject:	Activity Report for KAFB Well 106239 Conveyance Line Installation 6 October 2017
Date:	Friday, October 06, 2017 4:15:40 PM
Attachments:	Daily Field Activities Summary Report.pdf Photos 10-6-17.pdf

---

Issues Today Friday 6 October 2017:

- In the area of the junction vault, the electrical conduit for well 228 is buried approximately 1-foot above the existing conveyance line. As a result, the HDPE welder will not have enough clearance to weld the flange faces onto the existing conveyance line.

Resolution of Issues:

- EA is looking into rerouting the electrical line for 228 around the junction vault. The plan for rerouting the electrical line will be send to USACE for approval prior to initiation

Work Performed Today:

- Prep for HDD
- Welded 2-inch and 4-inch HDPE conduit for HDD under Louisiana Blvd between Sta 21+00 and 26+25

Installation Completion to Date: 2%

Work Planned for 10 Oct 2017:

- Begin HDD
- Begin electrical pad construction

Please let me know if you need additional information.

Tyler Curley, P.E.
EA Engineering, Science, and Technology, Inc., PBC
320 Gold Avenue, SW Suite 1300
Albuquerque, NM 87120
(505) 715-4422 work
(719) 688-9558 cell
tcurley@eaest.com

DAILY FIELD ACTIVITIES SUMMARY REPORT		
PROJECT NAME: KAFB Well 106239 Conveyance Line Installation		
Date: 10-06-17	Time Shift Beginning: 0700	Time Shift Ending:1530
Project Number: 62599DM01		Contract/Task Order No.:
Client: USACE		Report By: Tyler Curley
Contractor(s): RMCI		Project Manager: Devon Jercinovic
Design Manager:		Oversight Manager: Tyler Curley
Design Engineer: George Nemeth		Site Engineer: Tyler Curley
Weather: Sunny 80° F		Logbook Number: NA
Personnel Onsite:	**Name:**	**Reason for Being Onsite:**
EA	Tyler Curley Earl Morse	Construction/Safety Oversight Construction/Safety Oversight
USACE	Mark Phaeuf	Site visit
RMCI	Ed Hyde Jerry Patton Phillip Johnson Felipe Hernandez Robert BeBault Jesus Moya Marcos Torres	General Contractor

Work Performed:

Planned Activities:

- Prep for HDD
- Prep for trenching

Completed Activities:

- Prep for HDD
- Welded 2-inch and 4-inch HDPE conduit for HDD under Louisiana Blvd between Sta 21+00 and 26+25

Material Deliveries:

- None

Construction Quality Control Activities or Samples Collected:

- None

Observations or Possible Variations from Specifications:

- None

Anticipated Activities for the Following Day:

- Begin HDD
- Begin electrical pad construction

Planned Material Deliveries:

- None

Contractor Reports, Manifests, Documents Reviewed and Logged:	
None	
Report Completed By:	
Tyler Curley	Date: 06 October 2017

EA Engineering, Science, and Technology, Inc

Employee/Visitor Register and Safety Brief

Date: 10-6-2017

Site Entry/Exit		Name (Printed)	Signature	Company
Time In	Time Out			
7:00	1440	ED Hyde		RMCI
7:00	1440	Jerry Patton		RMCI
7:00	1440	Jesus Moya		RMCI
7:00	1440	MARCOS TORRES		RMCI
7:00	1440	Robert BeBault		RMCI
7:00	1440	Felipe Hernandez	Felipe Hernandez	RMCI
0700	1030	Earl Morse		EA
0900	1050	Monte Leiding	Monte Leiding	RMCI
1010	1440	Tyler Curley		EA
1100	1230	Phillip Johnson		RMCI
1330	1340	Mark Phaneuf		USACE

EA ENGINEERING, SCIENCE AND TECHNOLOGY, INC.
SAFETY MEETING REPORT

Date: 10-6-2017	**Time:** 0645	**Duration of meeting:** 15	**Project #** 12599DM01
Location: VA Contractor yard		**Task:** Conveyance line construction	

Type of meeting: X **Daily** ___ **Weekly** ___ **Monthly** ___ **Other:** _____

Items/Issues discussed:

1. Traffic safety, Friday driving by public
2. Material Handeling
3. Weather
4. Slip/trip/fall
5. Uneven surfaces

Attach minutes of safety meeting if taken.

Safety questions/issues raised:	Actions/Follow-up needed:
1. None	
2.	
3.	
4.	
5.	
6.	

Remarks: None

Meeting conducted by: EA-L Morse

EA Engineering, Science, and Technology, Inc.

DAILY SAFETY INSPECTION CHECKLIST
(TO BE COMPLETED EACH DAY OF CONSTRUCTION OR HTRW SITE ACTIVITIES)

Site: 106239 Conveyance yd
Location: VA Yard - ALBUQUERQUE
Project No.: 625990M01.1009
Client: USACE

Prepared by SSHO: Earl Morse
Project Manager: Devon Jercinovic
Date: 10-6-2017

Rating	Y	N	N/A	Comments/Immediate Corrective Action[1]
Accident Prevention Plan (APP) and Site Safety and Health Plan (SSHP) General Requirements				
Are there new onsite personnel? • Did they receive pre-entry briefing and are their names recorded in field logbook or daily log? • Was the USACE PM made aware of the new personnel. • Required training and medical surveillance documentation received (e.g., 40-hr, 8 hr, etc.)?		✓		
Did personnel sign in/out of site?	✓			
Daily tailgate safety meetings conducted and documented?	✓			
Were new activities performed today? Were hazards identified, discussed during the daily safety tailgate, and incorporated into revised APP/SSHP?		✓		
New materials brought on site? MSDSs available?		✓		
Exclusion (EZ), Contamination Reduction (CRZ), and Support Zones (SZ) delineated and enforced?			✓	
General housekeeping measures in place to prevent hazards?	✓			
Emergency Planning				
Were there any changes to emergency contact names, telephone numbers, or hospital? If so, were site personnel made aware and was information distributed/reposted.		✓		
Adequate safety equipment inventory available?	✓			
Fire extinguisher available (monthly inspection of extinguisher will suffice)	✓			
Eyewash station(s) functioning and in place (weekly inspection of eye wash station will suffice)?	✓			
First aid supplies available (weekly inspection of first aid kit will suffice)?	✓			
Communication equipment readily available for emergencies?	✓			
Any reported accidents/incidents at this site? If so, were accident reporting procedures followed?		✓		
Air Monitoring				
Monitoring equipment specified in SSHP available and in working order? Air monitoring instrumentation for this site includes – check each if required/on site, note deficiencies in comments: • Combustible gas meter • Organic vapor analyzer • Contaminant specific analyzer for benzene (if total organic vapor concentrations exceed 0.5 ppm)			✓	
Monitoring equipment calibrated and calibration records				

Y = Satisfactory or Yes; N = Unsatisfactory or No, N/A = Not applicable

Rating	Y	N	N/A	Comments/Immediate Corrective Action[1]
available?				
Environmental and personnel monitoring performed as specified in SSHP?			✓	
PPE				
Proper dermal protection worn by EA and subcontracted employees when handling/ contacting hazardous chemicals or contaminated environmental media?			✓	
Required PPE (hard hats, safety boots / shoes, eye protection with side shields, hearing protection) being worn by EA and subcontracted employees?	✓			
PPE inspection completed by SSHO?	✓			
Drill Rig Operations				
Daily rig inspection completed? Any equipment problems?			✓	
Drill rigs/elevated equipment maintaining minimum 10-ft distance from energized (50 kV) overhead power lines?			✓	
Investigation-derived Waste (IDW)				
Wastes properly staged, secured, and labeled at end of day?	✓			

Additional Comments:

Site Safety and Health Officer's Signature

10-6-2017

Date

[1]If a deficiency is noted that cannot be immediately corrected, the SSHO will monitor the progress in correcting the deficiency and will document following:

- Date the deficiency was identified
- Description of the deficiency
- Name of the person responsible for correcting the deficiency
- Projected date of correction
- Actual date of correction.

HEALTH AND SAFETY ACTIVITY REPORT

Site: 106239 Conveyance Line Location: Albuquerque, NM

Weather Cond.: Partly Cloudy, 70° Onsite Hours: From 0645 To 1530

Changes in PPE Levels[1]	Work Operations	Reasons for Change
None		

Site Safety and Health Plan Violations	Corrective Action Specified	Corrective Action Taken [2](yes/no)
None		

Observations and Comments:

None

Completed by: [signature] Date: 10-6-2017

Site Health and Safety Supervisor

[1]Only SSHO may change PPE levels, using only criteria specified in APP/SSHP.

[2]If a deficiency is noted that cannot be immediately corrected, the SSHO will monitor the progress in correcting the deficiency and will document following:

- Date the deficiency was identified
- Description of the deficiency
- Name of the person responsible for correcting the deficiency
- Projected date of correction
- Actual date of correction.

DAILY FIELD ACTIVITIES SUMMARY REPORT			
PROJECT NAME:			
Date and Day:	Time Shift Beginning:		Time Shift Ending:
Project Number:			Contract/Task Order No.:
Client:			Report By::
Contractor(s):			Project Manager:
Design Manager:			Oversight Manager:
Design Engineer:			Site Engineer:
Weather:			Logbook Number:
Personnel Onsite	**Name**	**Affiliation**	**Reason for Being Onsite**
EA:			
Contractors: (Include type of equipment and number of personnel)			
Other/Visitors:			

Work Performed

Time and Location Health and Safety Toolbox Meeting Conducted:
Meeting Topics:
Activity Hazard Analyses Reviewed:

PLANNED ACTIVITIES:

COMPLETED ACTIVITIES:

MATERIAL DELIVERIES:

CONSTRUCTION QUALITY CONTROL ACTIVITIES OR SAMPLES COLLECTED:

OBSERVATIONS OR POSSIBLE VARIATIONS FROM SPECIFICATIONS:

From:	Curley, Tyler
To:	"Amy.E.Sanchez@usace.army.mil"; "Trent.Simpler@usace.army.mil"; "Carlos.F.Salazar@usace.army.mil"; "Linda.Dreeland@usace.army.mil"; "Mark.J.Phaneuf@usace.army.mil"
Cc:	Jercinovic, Devon; McKeage, Kevin; Morse, Earl; Rief, Lucas; Graves, Dustin
Subject:	Activity Report for KAFB Well 106239 Conveyance Line Installation 10 October 2017
Date:	Tuesday, October 10, 2017 7:36:08 PM
Attachments:	Photos 10-10-17.pdf Daily Field Activities Summary Report.pdf 007 CQM Daily Report 10OCT17.pdf

---

Issues Today Friday 10 October 2017:

- RMCI is planning on using native fill as bedding material for the conveyance line
- During pipe welding the pull wire broke while being pulled through the containment pipe (pull wire did not break in the area of the weld but approximately 5-6' after being pulled through the weld area thus the weld was not compromised)

Resolution of Issues:

- RMCI provided a sieve analysis of the native material for approval as bedding material
- The pipe was cut approximately 2' away from the initial weld to allow for retrieval of the pull wire. The pipe had centralizers installed on each end and was welded at the location of the cut

Work Performed Today:

- Prep for HDD
- Welded 200-feet of conveyance piping for HDD under Louisiana Blvd between Sta 21+00 and 26+25
- Start construction on the electrical pad
    - Started trenching for conduit

Installation Completion to Date: 3%

Work Planned for 11 Oct 2017:

- Continue electrical pad construction
    - Install conduit
    - Backfill and compact trench
    - Prep rebar pad
- Continue welding conveyance pipe for HDD

Please let me know if you need additional information.

Tyler Curley, P.E.
EA Engineering, Science, and Technology, Inc., PBC
320 Gold Avenue, SW Suite 1300
Albuquerque, NM 87120
(505) 715-4422 work
(719) 688-9558 cell
tcurley@eaest.com

DAILY FIELD ACTIVITIES SUMMARY REPORT		
PROJECT NAME: KAFB Well 106239 Conveyance Line Installation		
Date: 10-010-17	Time Shift Beginning: 0700	Time Shift Ending:1620
Project Number: 62599DM01		Contract/Task Order No.:
Client: USACE		Report By: Tyler Curley
Contractor(s): RMCI		Project Manager: Devon Jercinovic
Design Manager:		Oversight Manager: Tyler Curley
Design Engineer: George Nemeth		Site Engineer: Tyler Curley
Weather: Sunny 65° F		Logbook Number: NA
Personnel Onsite:	**Name:**	**Reason for Being Onsite:**
EA	Tyler Curley Earl Morse Kevin McKeage	Construction/Safety Oversight Construction/Safety Oversight
USACE	Mark Phaeuf Amy Sanchez	Site visit/Oversight
RMCI	Ed Hyde Jerry Patton Phillip Johnson Felipe Hernandez Robert BeBault Jesus Moya Marcos Torres George Ingram	General Contractor

Work Performed:

Planned Activities:

- Begin HDD
- Begin electrical pad construction

Completed Activities:

- Prep for HDD
- Welded 200-feet of conveyance piping for HDD under Louisiana Blvd between Sta 21+00 and 26+25
- Started construction on the electrical pad
    - Trenching for conduit

Material Deliveries:

- None

Construction Quality Control Activities or Samples Collected:

- None

Observations or Possible Variations from Specifications:

- RMCI will use native material for bedding sand. EA will compare testing results against specifications and plans.

Anticipated Activities for the Following Day:	

• Continue electrical pad construction
  o Install conduit
  o Backfill and compact trench
  o Prep rebar pad
• Continue welding conveyance pipe for HDD
Planned Material Deliveries:
• None	

Contractor Reports, Manifests, Documents Reviewed and Logged:	
None	
Report Completed By:	
Tyler Curley	Date: 10 October 2017

DAILY REPORT

(ATTACH ADDITIONAL SHEETS IF NECESSARY)

CONTRACT NAME:	Kirtland AFB Bulk Fuels Facility Expansion of Dissolved Plume GWTS Design	REPORT NO:	007
CONTRACT NUMBER:	W912DR-12-D-0006	REPORT DATE:	10OCT17
REVISION NUMBER:	-	REVISION DATE:	-
TASK ORDER NUMBER:	DM01	PROJECT NAME / LOCATION:	Kirtland BFF
PROJECT NUMBER:	62599DM01	PROJECT DESCRIPTION:	Installation of KAFB-106239 Conveyance Line
PROJECT MANAGER:	Devon Jercinovic	FIELD QUALITY MANAGER:	Kevin McKenzie
CONSTRUCTION MANAGER:	Tyler Curley	SITE SAFETY MANAGER:	Earl Morse

AM WEATHER:	Clear Cold	PM WEATHER:	Clear Cool	MAX TEMP (F):	64		

SUMMARY OF WORK PERFORMED TODAY

CQM Review of Soils Test Report

HEALTH AND SAFETY REPORT

SAFETY ACTIONS TAKEN TODAY/SAFETY INSPECTIONS CONDUCTED (Include Observations, Safety Violations, Corrective Instructions Given, Corrective Actions Taken, and Results of Safety Inspections Conducted:

See Construction Manager's Daily Report

TAILGATE TOPICS:

"

SAFE BEHAVIOR OBSERVATIONS/SELF-ASSESSMENTS:

"

OPERATIONS/PRODUCTION REPORT

WORK FORCE – CONTRACTOR AND SUBCONTRACTOR

Company	Cumulative Total of Work Hours From Previous Report	Total Hours Today	Total Work Hours From Start of Injection Event
See CM's Daily Report			

EQUIPMENT ON HAND

Description of Equipment	Make/Model/ Manufacturer	Equipment ID Number	Inspection Performed By
Water Truck	Colorado Kenworth	4610	Robert Rebault
Loader	Volvo L-120	2310	Jesus Moya
Excavator	Komatsu PC-200	107	Jesus Moya
HDPE Welder	McElroy Tracstar	8617	Jerry Patton
HDPE Welder	McElroy Tracstar	8618	Not in use
Track hoe	John Deere 60G	-	Jesus Moya

COMMENTS (acceptance status, inspection findings, etc.):

OK

WORK AND/OR TESTS ACCOMPLISHED OR IN PROGRESS

Performed Work/Test for Today: See Construction Manager's Daily Report

Planned Work/Test for Tomorrow: "

Planned Work/Test for Next Week: "

CHANGED CONDITIONS/DELAY/CONFLICTS ENCOUNTERED (List any conflicts with the project [i.e., scope of work and/or drawings], delays to the project attributable to site and weather conditions, etc. "

VISITORS AND DISCUSSIONS: "

QUALITY CONTROL REPORT

MATERIALS DELIVERED TO JOB SITE

Quantity/Volume/ Weight	Description of Materials Received	Make/Model/ Manufacturer	Material Lot Number	Inspection Performed By
None				

COMMENTS (acceptance status, inspection findings, etc.):

INSPECTIONS PERFORMED

Task/Activity Inspected	Inspection Performed	Findings
None		

TESTS PERFORMED

Task/Activity Tested	Test Performed	Test Results (Pass/Fail) - Criteria
Soils Test Report	Review	Pass - SM is Class 3 COA soil per COA Spec. 501

QUALITY ISSUES AND RESOLUTIONS: None

SUBMITTALS INSPECTION / REVIEW

Submittal No.	Submittal Description	Specification/Plan Reference	Submittal Approved?		Comment/Reason/Action
NA	Daily Report	_	Yes ☐	No ☐	Pending
NA	SBO	_	Yes ☐	No ☐	Pending
NA	PTSP	_	Yes ☐	No ☐	Pending

REGULATORY COMPLIANCE REPORT							
PERMIT INSPECTIONS PERFORMED: None							
WASTE ACCUMULATION/STOCKPILE AREA INSPECTION							
Inspection Performed By:	NA			Signature of Inspector:			
Accumulation / Stockpile Area Inspected:							
No of Bins:		No of Tankers		No of Roll-Off Boxes:		No. of Tanks	
Inspection Results: NA							
GENERAL COMMENTS							
General Comments: (rework, directives, etc.): OK, Native soil can be used for bedding + back fill.							
ATTACHMENTS							
List of Attachments: (examples, as applicable: submittals, meeting minutes, safety meeting minutes, COCs, weight tickets, manifests, profiles, rework item list, RFIs, DCNs, photographs, etc.): ~~None~~ Soil Test Results.							
NOTE: Write all entries legibly in ink. Line out all unused portions or designate as "not applicable". Preparer signs first and last name on each completed daily report. This form may be filled out electronically and signed electronically.				PREPARER'S SIGNATURE		DATE: 10 OCT 17	

Soils Test Report

Project:	KAFB Groundwater Conveyance Line	Report Date:	10/10/17
Client:	**RMCI, Inc.**	Sample Date:	10/4/17
Address:	**PO Box 91447**	Sampled By:	Abe Sandoval
	Albuquerque, NM 87119	Material Tested:	Native Subgrade
	3+00 KM	Date Tested:	10/5/2017
		Tested By:	Annikah
Sample Location:	Ridgecrest Dr. @ Sta. ~~17+65~~; -0.5' Depth		
Sample received:	10/3/2017	Visual Description:	Lt Brown Silty Sand
Laboratory #:	ABQ LL245-17 **P1**	Sample Source:	On-site Material

Sieve Analysis

C-117 & C136/T-11 & T-27

Sieve Size	% Passing	Specs
6" (150mm)		
3" (75mm)		
2" (50mm)		
1.5" (37.5mm)		
1" (25mm)		
3/4" (19mm)		
1/2" (12.5mm)	100	
3/8" (9mm)	99	
#4 (4.75mm)	99	
#8 (2.36mm)	97	
#10 (2mm)	96	
#16 (1.18mm)		
#30 (0.6mm)		
#40 (0.425mm)	80	
#50 (0.3mm)		
#80 (0.18mm)	62	
#100 (0.15mm)		
#200 (0.75mm)	20.0	
As Received Water Content:		

Type Rammer: Mechanical
Rammer ID #: CA2-3011-B
Calibration Date: 5/21/2016
Next Calibration Due: 6/21/2017

Test Results

Standard	Physical Properties		Results	Specs
T-180	Proctor	Max Density, (lbs/ft^3)	100.1	
D-1557	(Modified)	Optimum Moisture, %	14.2	
		Method	B	
D-4318	Atterburg	Liquid Limit	NV	
	Limits	Plastic Limit	NV	
T-89/90		Plasticity Index	NP	
		Dry or Wet Prep	Wet	
Soil Classification	Soil Class		SM	
ASTM D2487	Soil Type		Silty Sand	

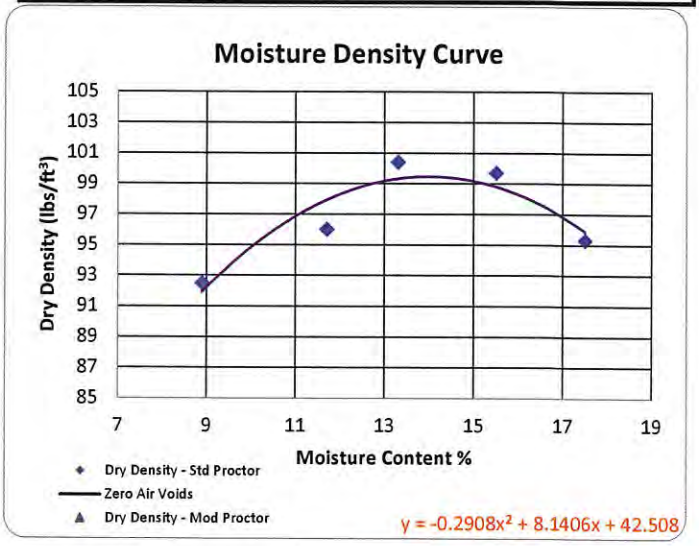

Reports to: fax/email

Phillip Johnson pjohnson@rmciinc.com

Respectfully Submitted,

Abe Sandoval

Abe Sandoval, Manager of Technical Services

414 Bibb Industrial Dr.
P.O.Box 1228
Las Vegas, NM 87701
505-718-3030

Concrete, Aggregate and Asphalt Testing, LLC

9430 San Mateo Blvd NE.
Unit H
Albuquerque, NM 87113
505-503-6670

EA Engineering, Science, and Technology, Inc

Employee/Visitor Register and Safety Brief

Date: 10-10-2017

Site Entry/Exit		Name (Printed)	Signature	Company
Time In	Time Out			
7:00	1620	Robert BeBault	Robert BeBault	RMCI
7:00	1620	Jerry Patton	Jerry Patton	RMCI
7:00	1620	George Ingram		RMCI
7:00	1620	MARCOS TORRES		RMCI
7:00	1620	ED HYDE		RMCI
7:00	1620	JESUS MOYA		RMCI
7:00	1620	Felipe Hernandez	Felipe Hernandez	RMCI
7:00	1430	EARL MORSE		EA
7:00	1620	Tyler Cosley		EA
8:00	8:11	Kevin McKenzie		EA
11:15	11:36	Amy Sanchez	Amy Sanchez	USACE
11:15	11:36	Mark Phaneuf		USACE

EA ENGINEERING, SCIENCE AND TECHNOLOGY, INC.
SAFETY MEETING REPORT

Date: 10-10-17	**Time:** 0700	**Duration of meeting:** 10	**Project #** 62990.0101
Location: KAFB Well 106239		**Task:** Conveyance Line Install	

Type of meeting: X **Daily** ___ **Weekly** ___ **Monthly** ___ **Other:** _____

Items/Issues discussed:

1. Overhead hazards
2. Pinch points
3. Heat points on welder
4. Traffic
5.

Attach minutes of safety meeting if taken.

Safety questions/issues raised:	**Actions/Follow-up needed:**
1. None	
2.	
3.	
4.	
5.	
6.	

Remarks: None

Meeting conducted by:
Tyler Curley

EA Engineering, Science, and Technology, Inc.

DAILY SAFETY INSPECTION CHECKLIST
(TO BE COMPLETED EACH DAY OF CONSTRUCTION OR HTRW SITE ACTIVITIES)

Site: KAFB Well 106239
Location: Ridgecrest Dr.
Project No.: 62599.MOI
Client: USACE

Prepared by SSHO: Tyler Curley
Project Manager: Devon Jereinovic
Date: 10-11-17

Rating	Y	N	N/A	Comments/Immediate Corrective Action[1]
Accident Prevention Plan (APP) and Site Safety and Health Plan (SSHP) General Requirements				
Are there new onsite personnel? • Did they receive pre-entry briefing and are their names recorded in field logbook or daily log? • Was the USACE PM made aware of the new personnel. • Required training and medical surveillance documentation received (e.g., 40-hr, 8 hr, etc.)?	✓	TC ✓		
Did personnel sign in/out of site?	✓			
Daily tailgate safety meetings conducted and documented?	✓			
Were new activities performed today? Were hazards identified, discussed during the daily safety tailgate, and incorporated into revised APP/SSHP?		✓		
New materials brought on site? MSDSs available?		✓		
Exclusion (EZ), Contamination Reduction (CRZ), and Support Zones (SZ) delineated and enforced?	✓			
General housekeeping measures in place to prevent hazards?	✓			
Emergency Planning				
Were there any changes to emergency contact names, telephone numbers, or hospital? If so, were site personnel made aware and was information distributed/reposted.		✓		
Adequate safety equipment inventory available?	✓			
Fire extinguisher available (monthly inspection of extinguisher will suffice)	✓			
Eyewash station(s) functioning and in place (weekly inspection of eye wash station will suffice)?	✓			
First aid supplies available (weekly inspection of first aid kit will suffice)?				
Communication equipment readily available for emergencies?	✓			
Any reported accidents/incidents at this site? If so, were accident reporting procedures followed?		✓		
Air Monitoring				
Monitoring equipment specified in SSHP available and in working order? Air monitoring instrumentation for this site includes – check each if required/on site, note deficiencies in comments: • Combustible gas meter • Organic vapor analyzer • Contaminant specific analyzer for benzene (if total organic vapor concentrations exceed 0.5 ppm)	✓			
Monitoring equipment calibrated and calibration records	✓			

Y = Satisfactory or Yes; N = Unsatisfactory or No, N/A = Not applicable

Rating	Y	N	N/A	Comments/Immediate Corrective Action[1]
available?				
Environmental and personnel monitoring performed as specified in SSHP?	✓			
PPE				
Proper dermal protection worn by EA and subcontracted employees when handling/ contacting hazardous chemicals or contaminated environmental media?	✓			
Required PPE (hard hats, safety boots / shoes, eye protection with side shields, hearing protection) being worn by EA and subcontracted employees?	✓			
PPE inspection completed by SSHO?	✓			
Drill Rig Operations				
Daily rig inspection completed? Any equipment problems?	✓			
Drill rigs/elevated equipment maintaining minimum 10-ft distance from energized (50 kV) overhead power lines?	✓			
Investigation-derived Waste (IDW)				
Wastes properly staged, secured, and labeled at end of day?			✓	

Additional Comments:

Site Safety and Health Officer's Signature

10-11-17

Date

[1]If a deficiency is noted that cannot be immediately corrected, the SSHO will monitor the progress in correcting the deficiency and will document following:

- Date the deficiency was identified
- Description of the deficiency
- Name of the person responsible for correcting the deficiency
- Projected date of correction
- Actual date of correction.

HEALTH AND SAFETY ACTIVITY REPORT

Site: KAFB well 100239 Location: Ridgecrest Dr

Weather Cond.: Sunny 65°F Onsite Hours: From 0700 To 1620

Changes in PPE Levels[1]	Work Operations	Reasons for Change
None		

Site Safety and Health Plan Violations	Corrective Action Specified	Corrective Action Taken [2](yes/no)
None		

Observations and Comments:

None

Completed by: Tyler Curley Date: 10-10-17

Site Health and Safety Supervisor

[1]Only SSHO may change PPE levels, using only criteria specified in APP/SSHP.

[2]If a deficiency is noted that cannot be immediately corrected, the SSHO will monitor the progress in correcting the deficiency and will document following:

- Date the deficiency was identified
- Description of the deficiency
- Name of the person responsible for correcting the deficiency
- Projected date of correction
- Actual date of correction.

ENVIRONMENTAL MONITORING RECORD

SITE: KAFB-106239 Conveyance Line Installation

PROJECT NO.: 62599DM01

INSTRUMENT: Thermo Dust Monitor

Time	Monitoring Location	Reading (mg/m^3)	Corrective Action Taken[(a)]
1155	Cal Check	0.000	
1200	Sta 1+00	0.009	
1201	Sta 3+00	0.005	
1202	Sta 5+00	0.001	
1203	Sta 7+00	0.006	

Comments: N = North, E = East, S = South, W = West

Did not collect noise readings

Readings collected from N side of Ridgecrest Dr.

(a) Corrective actions taken must be documented whenever readings at or above action levels are reached. Monitoring equipment and action levels are specified in Section 9.33 of the Accident Prevention Plan.

Recorded By: Tyler Corley
Site Health & Safety Officer

Date: 10-10-07

From:	Curley, Tyler
To:	"Amy.E.Sanchez@usace.army.mil"; "Trent.Simpler@usace.army.mil"; "Carlos.F.Salazar@usace.army.mil"; "Linda.Dreeland@usace.army.mil"; "Mark.J.Phaneuf@usace.army.mil"
Cc:	Jercinovic, Devon; McKeage, Kevin; Morse, Earl; Graves, Dustin; Rief, Lucas
Subject:	Activity Report for KAFB Well 106239 Conveyance Line Installation 11 October 2017
Date:	Wednesday, October 11, 2017 6:08:23 PM
Attachments:	Daily Field Activities Summary Report.pdf 008 CQM Daily Report 11OCT17.pdf Photos 10-11-17.pdf

---

Issues Today Friday 11 October 2017:

- A small piece of electrical warning tape (~6" long) was discovered while trenching near the electrical pad

Resolution of Issues:

- Trenching with the excavator was stopped and the trench was hand dug to locate the electrical line. Approximately 2' of trench was hand dug and the electrical line was not located. No other pieces of electrical warning tape were discovered, trenching resumed without any issues

Work Performed Today:

- Continue electrical pad construction
    - Install conduit
    - Trench to wellhead location
- Welded 200-feet of conveyance piping for HDD under Louisiana Blvd between Sta 21+00 and 26+25

Installation Completion to Date: 4%

Work Planned for 12 Oct 2017:

- Continue electrical pad construction
    - Install conduit
    - Backfill and compact trench
    - Prep rebar pad and set forms

Please let me know if you need additional information.

Tyler Curley, P.E.
EA Engineering, Science, and Technology, Inc., PBC
320 Gold Avenue, SW Suite 1300
Albuquerque, NM 87120
(505) 715-4422 work
(719) 688-9558 cell
tcurley@eaest.com

DAILY FIELD ACTIVITIES SUMMARY REPORT		
PROJECT NAME: KAFB Well 106239 Conveyance Line Installation		
Date: 10-11-17	Time Shift Beginning: 0700	Time Shift Ending:1530
Project Number: 62599DM01		Contract/Task Order No.:
Client: USACE		Report By: Tyler Curley
Contractor(s): RMCI		Project Manager: Devon Jercinovic
Design Manager:		Oversight Manager: Tyler Curley
Design Engineer: George Nemeth		Site Engineer: Tyler Curley
Weather: Sunny 70° F		Logbook Number: NA
Personnel Onsite:	**Name:**	**Reason for Being Onsite:**
EA	Tyler Curley Earl Morse Dustin Graves Kevin McKeage	Construction/Safety Oversight Construction/Safety Oversight Construction/Safety Oversight CQM
Wilson Electric	Britt Crooks Jaime Perez Francisco Gonzalez	Site visit/Oversight
RMCI	Ed Hyde Jerry Patton Phillip Johnson Felipe Hernandez Robert BeBault Jesus Moya Marcos Torres George Ingram	General Contractor

Work Performed:

Planned Activities:

- Continue electrical pad construction
  - Install conduit
  - Backfill and compact trench
  - Prep rebar pad
- Continue welding conveyance pipe for HDD

Completed Activities:

- Continue electrical pad construction
  - Install conduit
  - Trench to wellhead location
- Welded 200-feet of conveyance piping for HDD under Louisiana Blvd between Sta 21+00 and 26+25

Material Deliveries:

- PVC electrical conduit

Construction Quality Control Activities or Samples Collected:

- Material inspections

Observations or Possible Variations from Specifications: • None

Anticipated Activities for the Following Day:

• Continue electrical pad construction
  o Install conduit
  o Backfill and compact trench
  o Prep rebar pad and set forms
• Begin HDD
Planned Material Deliveries:
• PVC electrical conduit

Contractor Reports, Manifests, Documents Reviewed and Logged:
None
Report Completed By:

Tyler Curley	Date: 11 October 2017

DAILY REPORT

(ATTACH ADDITIONAL SHEETS IF NECESSARY)

CONTRACT NAME:	Kirtland AFB Bulk Fuels Facility Expansion of Dissolved Plume GWTS Design	REPORT NO:	008
CONTRACT NUMBER:	W912DR-12-D-0006	REPORT DATE:	11 OCT 17
REVISION NUMBER:	-	REVISION DATE:	-
TASK ORDER NUMBER:	DM01	PROJECT NAME / LOCATION:	Kirtland BFF
PROJECT NUMBER:	62599DM01	PROJECT DESCRIPTION:	Installation of KAFB-106239 Conveyance Line
PROJECT MANAGER:	Devon Jercinovic	FIELD QUALITY MANAGER:	Kevin McKeage
CONSTRUCTION MANAGER:	Tyler Curley	SITE SAFETY MANAGER:	Earl Morse

AM WEATHER:	Clear Cold	PM WEATHER:	Clear Cool	MAX TEMP (F):		

SUMMARY OF WORK PERFORMED TODAY

Reviewed Soil Test Data and inspected delivered materials.

HEALTH AND SAFETY REPORT

SAFETY ACTIONS TAKEN TODAY/SAFETY INSPECTIONS CONDUCTED (Include Observations, Safety Violations, Corrective Instructions Given, Corrective Actions Taken, and Results of Safety Inspections Conducted:

See Construction Manager's Daily Report

TAILGATE TOPICS:

1/

SAFE BEHAVIOR OBSERVATIONS/SELF-ASSESSMENTS:

1/

OPERATIONS/PRODUCTION REPORT

WORK FORCE – CONTRACTOR AND SUBCONTRACTOR

Company	Cumulative Total of Work Hours From Previous Report	Total Hours Today	Total Work Hours From Start of Injection Event
See CM's Daily Report			

EQUIPMENT ON HAND

Description of Equipment	Make/Model/ Manufacturer	Equipment ID Number	Inspection Performed By
Water Truck	Colorado Kenworth	4610	Robert Bobbitt
Loader	Volvo L-120	2310	Jesus Moya
Excavator	Komatsu PC-200	107	Jesus Moya
HDPE Welder	McElroy Tracstar	8617	Jerry Patton
HDPE Welder	McElroy Tracstar	8618	Not in use

COMMENTS (acceptance status, inspection findings, etc.):

OK

WORK AND/OR TESTS ACCOMPLISHED OR IN PROGRESS

Performed Work/Test for Today: See Construction Manager's Daily Report

Planned Work/Test for Tomorrow: //

Planned Work/Test for Next Week: //

CHANGED CONDITIONS/DELAY/CONFLICTS ENCOUNTERED (List any conflicts with the project [i.e., scope of work and/or drawings], delays to the project attributable to site and weather conditions, etc. //

VISITORS AND DISCUSSIONS: //

QUALITY CONTROL REPORT

MATERIALS DELIVERED TO JOB SITE

Quantity/Volume/ Weight	Description of Materials Received	Make/Model/ Manufacturer	Material Lot Number	Inspection Performed By
Various	Detectable Warning Tape 3" and 6"	—	—	KM
Various	Rigid Steel to PVC Conduit Elbows	—	—	KM
25 ft	Grounding wire (#6)	—	—	KM
Various	1 1/4" PVC Conduit and PVC Solvent	—	—	KM

COMMENTS (acceptance status, inspection findings, etc.):

INSPECTIONS PERFORMED

Task/Activity Inspected	Inspection Performed	Findings
None		

TESTS PERFORMED

Task/Activity Tested	Test Performed	Test Results (Pass/Fail) - Criteria
Soils Test Reports	Review	Pass – Both SM as Class 3 CDA soil per CDA Spec. 501

QUALITY ISSUES AND RESOLUTIONS: None

SUBMITTALS INSPECTION / REVIEW

Submittal No.	Submittal Description	Specification/Plan Reference	Submittal Approved?		Comment/Reason/Action
NA	Daily Report	–	Yes ☐	No ☐	Pending
NA	SBO	–	Yes ☐	No ☐	Pending
NA	PTSP	–	Yes ☐	No ☐	Pending

REGULATORY COMPLIANCE REPORT							
PERMIT INSPECTIONS PERFORMED: None							
WASTE ACCUMULATION/STOCKPILE AREA INSPECTION							
Inspection Performed By:	NA			Signature of Inspector:			
Accumulation / Stockpile Area Inspected:	NA						
No of Bins:		No of Tankers		No of Roll-Off Boxes:		No. of Tanks	
Inspection Results: NA							
GENERAL COMMENTS							
General Comments: (rework, directives, etc.): OK							
ATTACHMENTS							
List of Attachments: (examples, as applicable: submittals, meeting minutes, safety meeting minutes, COCs, weight tickets, manifests, profiles, rework item list, RFIs, DCNs, photographs, etc.): Photolog and test reports							
NOTE: Write all entries legibly in ink. Line out all unused portions or designate as "not applicable". Preparer signs first and last name on each completed daily report. This form may be filled out electronically and signed electronically.				PREPARER'S SIGNATURE		11 OCT 17 DATE	

Location: Field Trailer
Description: Detectable Warning Tape
Date: 11 October 2017 Direction: East

Location: VA Lot
Description: Rigid Steel to PVC Conduit Elbows
Date: 11 October 2017 Direction: Down

Location: VA Lot
Description: Detectable Warning Tape
Date: 11 October 2017 Direction: Down

Location: VA Lot
Description: Grounding Wire
Date: 11 October 2017 Direction: Down

Location: VA Lot
Description: PVC Solvent
Date: 11 October 2017 Direction: Down

Location: Field Trailer
Description: 1.25” Conduit
Date: 11 October 2017 Direction: Down

Soils Test Report

Project:	KAFB Groundwater Conveyance Line	Report Date:	10/10/17
Client:	**RMCI, Inc.**	Sample Date:	10/4/17
Address:	**PO Box 91447**	Sampled By:	Abe Sandoval
	Albuquerque, NM 87119	Material Tested:	Native Subgrade
		Date Tested:	10/5/2017
		Tested By:	Annikah
Sample Location:	Ridgecrest Dr. @ Sta. 17+65; -0.5' Depth		
Sample received:	10/3/2017	Visual Description:	Lt Brown Silty Sand
Laboratory #:	ABQ LL245-17 **P1**	Sample Source:	On-site Material

Sieve Analysis

C-117 & C136/T-11 & T-27

Sieve Size	% Passing	Specs
6" (150mm)		
3" (75mm)		
2" (50mm)		
1.5" (37.5mm)		
1" (25mm)		
3/4" (19mm)		
1/2" (12.5mm)	100	
3/8" (9mm)	99	
#4 (4.75mm)	99	
#8 (2.36mm)	97	
#10 (2mm)	96	
#16 (1.18mm)		
#30 (0.6mm)		
#40 (0.425mm)	80	
#50 (0.3mm)		
#80 (0.18mm)	62	
#100 (0.15mm)		
#200 (0.75mm)	20.0	

As Received Water Content:

Type Rammer: Mechanical
Rammer ID #: CA2-3011-B
Calibration Date: 5/21/2016
Next Calibration Due: 6/21/2017

Test Results

Standard	Physical Properties		Results	Specs
T-180	Proctor	Max Density, (lbs/ft^3)	100.1	
D-1557	(Modified)	Optimum Moisture, %	14.2	
		Method	B	
D-4318	Atterburg	Liquid Limit	NV	
	Limits	Plastic Limit	NV	
T-89/90		Plasticity Index	NP	
		Dry or Wet Prep	Wet	
Soil Classification		Soil Class	SM	
ASTM D2487		Soil Type	Silty Sand	

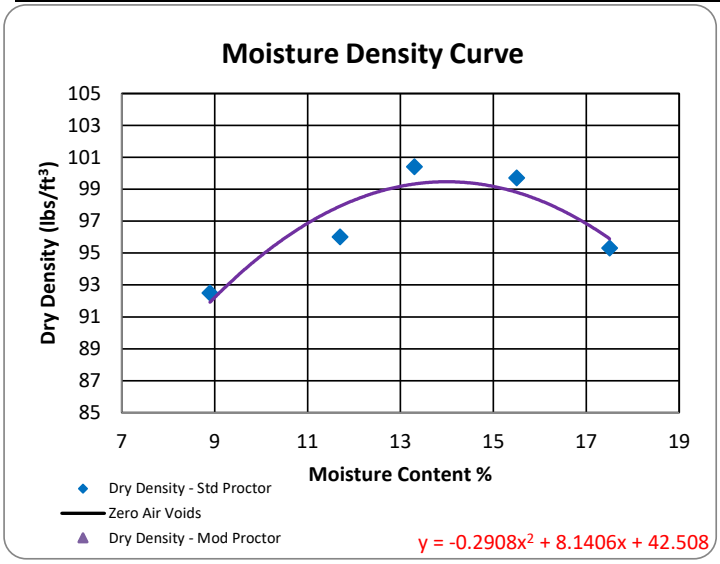

Reports to: fax/email

Phillip Johnson pjohnson@rmciinc.com

Respectfully Submitted,

Abe Sandoval

Abe Sandoval, Manager of Technical Services

Soils Test Report

Project:	KAFB Groundwater Conveyance Line	Report Date:	10/10/17
Client:	**RMCI, Inc.**	Sample Date:	10/4/17
Address:	**PO Box 91447**	Sampled By:	Abe Sandoval
	Albuquerque, NM 87119	Material Tested:	Native Subgrade
		Date Tested:	10/5/2017
		Tested By:	Annikah/Mary
Sample Location:	Ridgecrest Dr. @ Sta. 3+00; -3.0' Depth		
Sample received:	10/3/2017	Visual Description:	Lt Brown Sand
Laboratory #:	ABQ LL246-17 **P2**	Sample Source:	On-site Material

Sieve Analysis

C-117 & C136/T-11 & T-27

Sieve Size	% Passing	Specs
6" (150mm)		
3" (75mm)		
2" (50mm)		
1.5" (37.5mm)		
1" (25mm)		
3/4" (19mm)		
1/2" (12.5mm)		
3/8" (9mm)	100	
#4 (4.75mm)	99	
#8 (2.36mm)	99	
#10 (2mm)	98	
#16 (1.18mm)		
#30 (0.6mm)		
#40 (0.425mm)	92	
#50 (0.3mm)		
#80 (0.18mm)	85	
#100 (0.15mm)		
#200 (0.75mm)	42.6	

As Received Water Content:

Type Rammer: Mechanical
Rammer ID #: CA2-3011-B
Calibration Date: 5/21/2016
Next Calibration Due: 6/21/2017

Test Results

Standard	Physical Properties		Results	Specs
T-180	Proctor	Max Density, (lbs/ft^3)	114.5	
D-1557	(Modified)	Optimum Moisture, %	12.3	
		Method	A	
D-4318	Atterburg	Liquid Limit	25	
	Limits	Plastic Limit	22	
T-89/90		Plasticity Index	3	
		Dry or Wet Prep	Wet	
Soil Classification		Soil Class	SM	
ASTM D2487		Soil Type	Silty Sand	

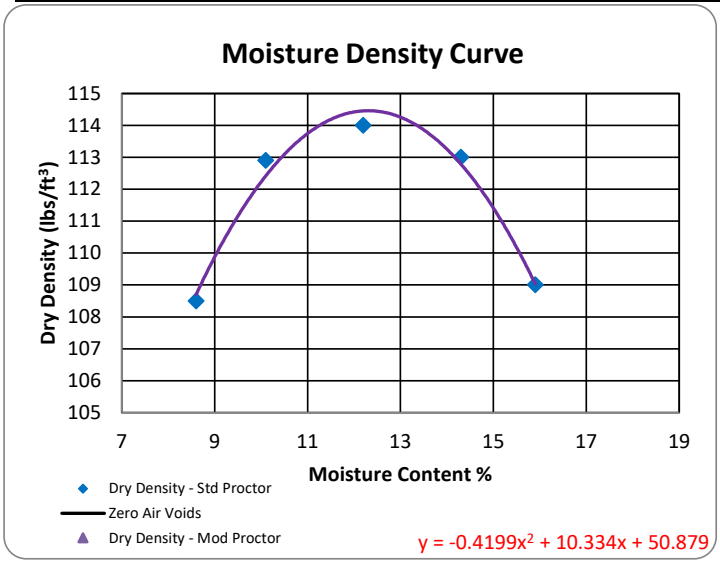

Reports to: fax/email

Phillip Johnson pjohnson@rmciinc.com

Respectfully Submitted,

Abe Sandoval

Abe Sandoval, Manager of Technical Services

EA Engineering, Science, and Technology, Inc

Employee/Visitor Register and Safety Brief

Date: 10-11-17

Site Entry/Exit		Name (Printed)	Signature	Company
Time In	Time Out			
0700		Tyler Curley		EA
7:00		Felipe Hernandez	Felipe Hernandez	RMCI
7:00		George Ingram		RMCI
7:00		Marcos Tovar		RMCI
7:00		Robert BeBault		RMCI
7:00		Jesus Moya		RMCI
7:00		ED Hyde		RMCI
7:00		Jerry Patton		RMCI
7:00	1015	Dustin Graves		EA
740		ROBERT ARRELL		RMCI
740	0830	Britt CROOKS		WILSON
740		FRANCISCO GONZALEZ		WILSON
740		Jaime Javier Perez		wilson Electric
815	0900	Kevin McKenzie		EA
1000	1500	Earl Morse		EA

EA ENGINEERING, SCIENCE AND TECHNOLOGY, INC.
SAFETY MEETING REPORT

Date: 10-11-17	**Time:** 0700	**Duration of meeting:** 10	**Project #** 62549DM01
Location: KAFB Well 106239		**Task:** Conveyance Line Install	

Type of meeting: _X_ **Daily** ___ **Weekly** ___ **Monthly** ___ **Other:**_____

Items/Issues discussed:

1. Slips trip fall
2. Pinch points
3. trench depths
4. Hot points
5. Moving Equipment

Attach minutes of safety meeting if taken.

Safety questions/issues raised:	Actions/Follow-up needed:
1. None	
2.	
3.	
4.	
5.	
6.	

Remarks:

None

Meeting conducted by:

Tyler Corley

EA Engineering, Science, and Technology, Inc.

DAILY SAFETY INSPECTION CHECKLIST (TO BE COMPLETED EACH DAY OF CONSTRUCTION OR HTRW SITE ACTIVITIES)

Site: KAFB Well 100039
Location: Richecrest Dr.
Project No.: G05900101
Client: USACE

Prepared by SSHO: Tyler Curley
Project Manager: Dawn Jercinovic
Date: 10-11-17

Rating	Y	N	N/A	Comments/Immediate Corrective Action[1]
Accident Prevention Plan (APP) and Site Safety and Health Plan (SSHP) General Requirements				
Are there new onsite personnel? • Did they receive pre-entry briefing and are their names recorded in field logbook or daily log? • Was the USACE PM made aware of the new personnel. • Required training and medical surveillance documentation received (e.g., 40-hr, 8 hr, etc.)?	✓			
Did personnel sign in/out of site?	✓			
Daily tailgate safety meetings conducted and documented?	✓			
Were new activities performed today? Were hazards identified, discussed during the daily safety tailgate, and incorporated into revised APP/SSHP?		✓		
New materials brought on site? MSDSs available?		✓		
Exclusion (EZ), Contamination Reduction (CRZ), and Support Zones (SZ) delineated and enforced?	✓			
General housekeeping measures in place to prevent hazards?	✓			
Emergency Planning				
Were there any changes to emergency contact names, telephone numbers, or hospital? If so, were site personnel made aware and was information distributed/reposted.		✓		
Adequate safety equipment inventory available?	✓			
Fire extinguisher available (monthly inspection of extinguisher will suffice)	✓			
Eyewash station(s) functioning and in place (weekly inspection of eye wash station will suffice)?	✓			
First aid supplies available (weekly inspection of first aid kit will suffice)?	✓			
Communication equipment readily available for emergencies?	✓			
Any reported accidents/incidents at this site? If so, were accident reporting procedures followed?		✓		
Air Monitoring				
Monitoring equipment specified in SSHP available and in working order? Air monitoring instrumentation for this site includes – check each if required/on site, note deficiencies in comments: • Combustible gas meter • Organic vapor analyzer • Contaminant specific analyzer for benzene (if total organic vapor concentrations exceed 0.5 ppm)	✓			
Monitoring equipment calibrated and calibration records	✓			

Y = Satisfactory or Yes; N = Unsatisfactory or No, N/A = Not applicable

Rating	Y	N	N/A	Comments/Immediate Corrective Action[1]
available?	✓			
Environmental and personnel monitoring performed as specified in SSHP?	✓			
PPE				
Proper dermal protection worn by EA and subcontracted employees when handling/ contacting hazardous chemicals or contaminated environmental media?	✓			
Required PPE (hard hats, safety boots / shoes, eye protection with side shields, hearing protection) being worn by EA and subcontracted employees?	✓			
PPE inspection completed by SSHO?	✓			
Drill Rig Operations				
Daily rig inspection completed? Any equipment problems?	✓			
Drill rigs/elevated equipment maintaining minimum 10-ft distance from energized (50 kV) overhead power lines?	✓			
Investigation-derived Waste (IDW)				
Wastes properly staged, secured, and labeled at end of day?			✓	

Additional Comments:

Site Safety and Health Officer's Signature

10-1-17

Date

[1]If a deficiency is noted that cannot be immediately corrected, the SSHO will monitor the progress in correcting the deficiency and will document following:

- Date the deficiency was identified
- Description of the deficiency
- Name of the person responsible for correcting the deficiency
- Projected date of correction
- Actual date of correction.

HEALTH AND SAFETY ACTIVITY REPORT

Site: KAFB Well 106239 Location: Ridgecrest Dr

Weather Cond.: Sunny 70°F Onsite Hours: From 0700 To _____

Changes in PPE Levels[1]	Work Operations	Reasons for Change
None		

Site Safety and Health Plan Violations	Corrective Action Specified	Corrective Action Taken [2](yes/no)
None		

Observations and Comments:

None

Completed by: Tyler Curley Date: 10-11-17
Site Health and Safety Supervisor

[1]Only SSHO may change PPE levels, using only criteria specified in APP/SSHP.
[2]If a deficiency is noted that cannot be immediately corrected, the SSHO will monitor the progress in correcting the deficiency and will document following:

- Date the deficiency was identified
- Description of the deficiency
- Name of the person responsible for correcting the deficiency
- Projected date of correction
- Actual date of correction.

ENVIRONMENTAL MONITORING RECORD

SITE: KAFB-106239 Conveyance Line Installation

PROJECT NO.: 62599DM01

INSTRUMENT: Quest Noise Pro Thermo Dust Monitor

Time	Monitoring Location	dB/mg/m³ Reading	Corrective Action Taken[a]
1210	Cal check	114.3/0.000	
	Sta 1+00	78.1/0.009	
	Sta 3+00	74.0/0.004	
	Sta 5+00	65.1/0.010	

Comments: N = North, E = East, S = South, W = West

Collected readings on the N side of Ridgecrest Dr

(a) Corrective actions taken must be documented whenever readings at or above action levels are reached. Monitoring equipment and action levels are specified in Section 9.33 of the Accident Prevention Plan.

Recorded By: Tyler Curley
Site Health & Safety Officer

Date: 10-11-17

From:	Morse, Earl
To:	Simpler, Trent SPA; Amy Sanchez; Carlos Salazar; Phaneuf, Mark J SPA (Mark.J.Phaneuf@usace.army.mil); Linda Dreeland
Cc:	Jercinovic, Devon; Curley, Tyler; McKeage, Kevin; Graves, Dustin; Rief, Lucas
Subject:	Activity Report for KAFB Well 106239 Conveyance Line Installation 12 October 2017
Date:	Thursday, October 12, 2017 5:19:09 PM
Attachments:	Daily Field Activities Summary Report 10-12-17.pdf 009 CQM Daily Report 12OCT17.pdf Photo Log 10-12-17.pdf

---

Issues Today Thursday 12 October 2017:

- Bixby had to cancel HDD boring today due to their operator having a medical issue. It does not appear Bixby will be able to bore this week.

Resolution of Issues:

- Bixby will need to provide another operator.

Work Performed Today:

- Continue electrical pad construction
  - Backfilled and compacted pad area
  - Constructed forms for concrete pad
- Electrical Trench
  - Wilson completed electrical conduit installation
  - Backfilled with three soil lifts to 3', 2' and 1' below grade. Conducted density test at each level
  - Backfilled to grade, compacted and smoothed

Installation Completion to Date: 5%

Work Planned for 13 Oct 2017:

- Continue electrical pad construction
  - Prep rebar and finalize for concrete
  - Pour electrical pad
- Continue with HDD welding

Please let me know if you need additional information.

Earl L. Morse, MS, PG
EA Engineering, Science, and Technology, Inc., PBC
Project Manager/Senior Geologist
320 Gold Ave. SW, Suite 1300
Albuquerque, NM 87102
Cell: 505.238-4410
Office: 505.715.4275
Email: emorse@eaest.com
www.eaest.com

DAILY FIELD ACTIVITIES SUMMARY REPORT		
PROJECT NAME: KAFB Well 106239 Conveyance Line Installation		
Date: 10-12-17	Time Shift Beginning: 0700	Time Shift Ending:1530
Project Number: 62599DM01		Contract/Task Order No.:
Client: USACE		Report By: Earl Morse
Contractor(s): RMCI		Project Manager: Devon Jercinovic
Design Manager:		Oversight Manager: Earl Morse
Design Engineer: George Nemeth		Site Engineer: Kevin McKeage
Weather: Clear/warm 80° F		Logbook Number: NA
Personnel Onsite:	**Name:**	**Reason for Being Onsite:**
EA	Earl Morse Kevin McKeage Dustin Graves	Construction/Safety Oversight Construction/Testing Engineer Project Support/Oversight
Wilson Electric	Jamie Perez Francisco Gonzalez	Electrical Conduit Install
CAZ Testing	Abe Sandoval	Density Testing
RMCI	Ed Hyde Robert BeBault George Ingram Felipe Hernandez Marcos Torres Jesus Perez	General Contractor

Work Performed:

Planned Activities:

- Backfill and compact electrical trench
- Frame out for electrical pad
- Complete install of electrical conduit
- Complete three lifts on main electrical trench and density tests
- HDD bore of sanitary sewer
- Prep for trenching

Completed Activities:

- Completed electrical pad backfill and compaction
- Completed framing for electrical pad pour
- Finished electrical conduit install and completed three soil lifts in main electrical trench
- Performed density test at station 1+60 on lifts at 3', 2' and 1' below grade. All passed density and moisture requirements as follows:
  - 3': Density 90.2, Moisture 13.5%
  - 2': Density 92.0, Moisture 13.6%
  - 1': Density 93.6, Moisture 14.0%
- Backfilled electrical trench to grade, compacted and smoothed to grade (@65' of trench)

Material Deliveries: • 2” electrical conduit • Rebar
Construction Quality Control Activities or Samples Collected: • Oversight of density test
Observations or Possible Variations from Specifications: • None

Anticipated Activities for the Following Day:	
• Finish prep for pouring concrete pad • Pour concrete pad • Continue HDD prep **Planned Material Deliveries:** • None	
Contractor Reports, Manifests, Documents Reviewed and Logged:	
None	
Report Completed By:	
Earl Morse	Date: 12 October 2017

DAILY REPORT

(ATTACH ADDITIONAL SHEETS IF NECESSARY)

CONTRACT NAME:	Kirtland AFB Bulk Fuels Facility Expansion of Dissolved Plume GWTS Design	REPORT NO:	209
CONTRACT NUMBER:	W912DR-12-D-0006	REPORT DATE:	12 OCT 17
REVISION NUMBER:	-	REVISION DATE:	-
TASK ORDER NUMBER:	DM01	PROJECT NAME / LOCATION:	Kirtland BFF
PROJECT NUMBER:	62599DM01	PROJECT DESCRIPTION:	Installation of KAFB-106239 Conveyance Line
PROJECT MANAGER:	Devon Jercinovic	FIELD QUALITY MANAGER:	Kevin McKeage
CONSTRUCTION MANAGER:	Earl Morse	SITE SAFETY MANAGER:	Earl Rose

AM WEATHER:	Cool Clear	PM WEATHER:	Warm Clear	MAX TEMP (F):	79		

SUMMARY OF WORK PERFORMED TODAY

Inspection of Delivered Materials and Compaction Testing

HEALTH AND SAFETY REPORT

SAFETY ACTIONS TAKEN TODAY/SAFETY INSPECTIONS CONDUCTED (Include Observations, Safety Violations, Corrective Instructions Given, Corrective Actions Taken, and Results of Safety Inspections Conducted:

See Construction Manager's Daily Report

TAILGATE TOPICS:

"

SAFE BEHAVIOR OBSERVATIONS/SELF-ASSESSMENTS:

"

OPERATIONS/PRODUCTION REPORT

WORK FORCE – CONTRACTOR AND SUBCONTRACTOR

Company	Cumulative Total of Work Hours From Previous Report	Total Hours Today	Total Work Hours From Start of Injection Event
See Con Manager's Report.			

EQUIPMENT ON HAND

Description of Equipment	Make/Model/ Manufacturer	Equipment ID Number	Inspection Performed By
Water Truck	Colorado Kenworth	4610	Robert Beckwith
Loader	Volvo L-120	2310	Jesus Moya
Excavator	Komatsu PC-200	1107	Jesus Moya
HDPE Welder	McElroy Tracstar	8617	Not in Use
HDPE Welder	McElroy Tracstar	8618	Not in Use
Backhoe	John Deere 310SJ	1415	Jesus Moya

COMMENTS (acceptance status, inspection findings, etc.):

OK.

WORK AND/OR TESTS ACCOMPLISHED OR IN PROGRESS

Performed Work/Test for Today: See Construction Manager's Daily Report

Planned Work/Test for Tomorrow: "

Planned Work/Test for Next Week: "

CHANGED CONDITIONS/DELAY/CONFLICTS ENCOUNTERED (List any conflicts with the project [i.e., scope of work and/or drawings], delays to the project attributable to site and weather conditions, etc. "

VISITORS AND DISCUSSIONS: "

QUALITY CONTROL REPORT

MATERIALS DELIVERED TO JOB SITE

Quantity/Volume/ Weight	Description of Materials Received	Make/Model/ Manufacturer	Material Lot Number	Inspection Performed By
Various	#4 Rebar	—	—	KM
150 ft	1.25" PVC Conduit	Cantex	—	KM

COMMENTS (acceptance status, inspection findings, etc.): All materials in specifications.

INSPECTIONS PERFORMED

Task/Activity Inspected	Inspection Performed	Findings
Compaction	Visual Inspection	OK

TESTS PERFORMED

Task/Activity Tested	Test Performed	Test Results (Pass/Fail) - Criteria
Compaction	Density + Moisture	All 3 lifts Passed

QUALITY ISSUES AND RESOLUTIONS: None

SUBMITTALS INSPECTION / REVIEW

Submittal No.	Submittal Description	Specification/Plan Reference	Submittal Approved?		Comment/Reason/Action
NA	Daily Report	-	Yes ☐	No ☐	Pending
NA	SBO	-	Yes ☐	No ☐	Pending
NA	PTSP	-	Yes ☐	No ☐	Pending

REGULATORY COMPLIANCE REPORT							
PERMIT INSPECTIONS PERFORMED: None							
WASTE ACCUMULATION/STOCKPILE AREA INSPECTION							
Inspection Performed By:	NA			Signature of Inspector:			
Accumulation / Stockpile Area Inspected:							
No of Bins:		No of Tankers		No of Roll-Off Boxes:		No. of Tanks	
Inspection Results: NA							
GENERAL COMMENTS							
General Comments: (rework, directives, etc.): OK							
ATTACHMENTS							
List of Attachments: (examples, as applicable: submittals, meeting minutes, safety meeting minutes, COCs, weight tickets, manifests, profiles, rework item list, RFIs, DCNs, photographs, etc.): Photo log							
NOTE: Write all entries legibly in ink. Line out all unused portions or designate as "not applicable". Preparer signs first and last name on each completed daily report. This form may be filled out electronically and signed electronically.				PREPARER'S SIGNATURE		DATE: 12 OCT 17	

Location: Station 1+50
Description: 1.25” PVC Conduit
Date: 12 October 2017 Direction: Down

Location: VA Lot
Description: Compaction around laid conduit
Date: 12 October 2017 Direction: Northwest

Location: VA Lot
Description: #4 Rebar for Concrete Pad
Date: 12 October 2017 Direction: Down

Location: Field Trailer
Description: #4 Rebar for Concrete Pad
Date: 12 October 2017 Direction: Down

EA Engineering, Science, and Technology, Inc

Employee/Visitor Register and Safety Brief

Date: 10-12-2017

Site Entry/Exit		Name (Printed)	Signature	Company
Time In	Time Out			
7:00	1525	ED Hyde		RMCI
7:00	↓	Robert BeBault		RMCI
7:00	↓	George Ingram		RMCI
7:00	↓	Felipe Hernandez	Felipe Hernandez	RMCI
0700	0845	Dustin Graves,		EA
7:00	1525	MARCOS TORRES.		RMCI
7:00	↓	Jesus Moya		RMCI
7:40	↓	Earl Morse		EA
7:00	↓	Jaime Frausto Perez		Wilson Electric
7:00	↓	FRANCISCO GONZALEZ		WILSON
8:00	0845	Kevin McKenzie		EA
2:05	1415	Abe Sandoval		CAZ Testing

EA ENGINEERING, SCIENCE AND TECHNOLOGY, INC.
SAFETY MEETING REPORT

Date: 10-12-2017	**Time:** 0650	**Duration of meeting:** 10	**Project #** 62599DM01
Location: 106239 Conveyance Line		**Task:** Excavation / boring	

Type of meeting: X **Daily** ___ **Weekly** ___ **Monthly** ___ **Other:** _____

Items/Issues discussed:

1. trenching
2. communications
3. Working with jumping jacks
4. Hydration
5. Watching out for visitors

Attach minutes of safety meeting if taken.

Safety questions/issues raised:	**Actions/Follow-up needed:**
1. Visitors coming into swing radius of excavator	SSHO to better monitor
2.	
3.	
4.	
5.	
6.	

Remarks: None

Meeting conducted by:

Frank Morse

EA Engineering, Science, and Technology, Inc.

DAILY SAFETY INSPECTION CHECKLIST
(TO BE COMPLETED EACH DAY OF CONSTRUCTION OR HTRW SITE ACTIVITIES)

Site: 10f239 Conveyance Line
Location: Ridgecrest Ave ABQ, NM
Project No.: 62599 DMO1.1009
Client: USACE

Prepared by SSHO: Earl Morse
Project Manager: Devon Sercinovic
Date: 10-12-2017

Rating	Y	N	N/A	Comments/Immediate Corrective Action[1]
Accident Prevention Plan (APP) and Site Safety and Health Plan (SSHP) General Requirements				
Are there new onsite personnel? • Did they receive pre-entry briefing and are their names recorded in field logbook or daily log? • Was the USACE PM made aware of the new personnel. • Required training and medical surveillance documentation received (e.g., 40-hr, 8 hr, etc.)?		✓		
Did personnel sign in/out of site?	✓			
Daily tailgate safety meetings conducted and documented?	✓			
Were new activities performed today? Were hazards identified, discussed during the daily safety tailgate, and incorporated into revised APP/SSHP?		✓		
New materials brought on site? MSDSs available?		✓		
Exclusion (EZ), Contamination Reduction (CRZ), and Support Zones (SZ) delineated and enforced?			✓	
General housekeeping measures in place to prevent hazards?	✓			
Emergency Planning				
Were there any changes to emergency contact names, telephone numbers, or hospital? If so, were site personnel made aware and was information distributed/reposted.		✓		
Adequate safety equipment inventory available?	✓			
Fire extinguisher available (monthly inspection of extinguisher will suffice)	✓			
Eyewash station(s) functioning and in place (weekly inspection of eye wash station will suffice)?	✓			
First aid supplies available (weekly inspection of first aid kit will suffice)?	✓			
Communication equipment readily available for emergencies?	✓			
Any reported accidents/incidents at this site? If so, were accident reporting procedures followed?		✓		
Air Monitoring				
Monitoring equipment specified in SSHP available and in working order? Air monitoring instrumentation for this site includes – check each if required/on site, note deficiencies in comments: • Combustible gas meter • Organic vapor analyzer • Contaminant specific analyzer for benzene (if total organic vapor concentrations exceed 0.5 ppm)			✓	
Monitoring equipment calibrated and calibration records			✓	

Y = Satisfactory or Yes; N = Unsatisfactory or No, N/A = Not applicable

Rating	Y	N	N/A	Comments/Immediate Corrective Action[1]
available?				
Environmental and personnel monitoring performed as specified in SSHP?	✓			
PPE				
Proper dermal protection worn by EA and subcontracted employees when handling/ contacting hazardous chemicals or contaminated environmental media?	✓			
Required PPE (hard hats, safety boots / shoes, eye protection with side shields, hearing protection) being worn by EA and subcontracted employees?	✓			
PPE inspection completed by SSHO?	✓			
Drill Rig Operations				
Daily rig inspection completed? Any equipment problems?			✓	
Drill rigs/elevated equipment maintaining minimum 10-ft distance from energized (50 kV) overhead power lines?			✓	
Investigation-derived Waste (IDW)				
Wastes properly staged, secured, and labeled at end of day?			✓	

Additional Comments:

Site Safety and Health Officer's Signature

10-12-17

Date

[1]If a deficiency is noted that cannot be immediately corrected, the SSHO will monitor the progress in correcting the deficiency and will document following:

- Date the deficiency was identified
- Description of the deficiency
- Name of the person responsible for correcting the deficiency
- Projected date of correction
- Actual date of correction.

HEALTH AND SAFETY ACTIVITY REPORT

Site: 106239 Conveyance Line Location: ABQ, NM

Weather Cond.: Clear Onsite Hours: From 0645 To 1530

Changes in PPE Levels[1]	Work Operations	Reasons for Change
None		

Site Safety and Health Plan Violations	Corrective Action Specified	Corrective Action Taken [2](yes/no)
None		

Observations and Comments:

None

Completed by: Earl Mann Date: 10-12-17

Site Health and Safety Supervisor

[1]Only SSHO may change PPE levels, using only criteria specified in APP/SSHP.

[2]If a deficiency is noted that cannot be immediately corrected, the SSHO will monitor the progress in correcting the deficiency and will document following:

- Date the deficiency was identified
- Description of the deficiency
- Name of the person responsible for correcting the deficiency
- Projected date of correction
- Actual date of correction.

ENVIRONMENTAL MONITORING RECORD

SITE: KAFB-106239 Conveyance Line Installation

PROJECT NO.: 62599DM01

INSTRUMENT: Noise Pro DLX #2804

Time	Monitoring Location	Reading	Corrective Action Taken[a]
	~~None~~		
1230	Calibration to 114.0	114.2 db	—
1235	Next to Excavator @ 15'	77.4 db	—
1255	Jumping Jack @ 6'	82.4 db	—
1330	During Excavation 10' from Excavator	76.0 db	—

Comments: N = North, E = East, S = South, W = West

(a) Corrective actions taken must be documented whenever readings at or above action levels are reached. Monitoring equipment and action levels are specified in Section 9.33 of the Accident Prevention Plan.

Recorded By: _____ Date: 10-12-17

Site Health & Safety Officer

From:	Morse, Earl
To:	Simpler, Trent SPA; Amy Sanchez; Carlos Salazar; Linda Dreeland; Phaneuf, Mark J SPA (Mark.J.Phaneuf@usace.army.mil)
Cc:	Jercinovic, Devon; McKeage, Kevin; Curley, Tyler; Graves, Dustin; Rief, Lucas
Subject:	Daily Report for KAFB Well 106239 Conveyance Line Installation 13 October 2017
Date:	Friday, October 13, 2017 1:32:18 PM
Attachments:	Daily Field Activities Summary Report 10-13-17.pdf 010 CQM Daily Report 13OCT17.pdf Photo Log 10-13-17.pdf

---

Issues Today Thursday 13 October 2017:

- None

Resolution of Issues:

- None

Work Performed Today:

- Completed rebar installation in the electrical pad form
- Poured 2.5 yards of 4000 psi concrete
- Leveled and smoothed concrete to form, completed with brushed texture

Installation Completion to Date: 5%

Work Planned for 16 Oct 2017:

- Start HDD borings
- Continue with HDD prep

Please let me know if you need additional information.

Earl L. Morse, MS, PG
EA Engineering, Science, and Technology, Inc., PBC
Project Manager/Senior Geologist
320 Gold Ave. SW, Suite 1300
Albuquerque, NM 87102
Cell: 505.238-4410
Office: 505.715.4275
Email: emorse@eaest.com
www.eaest.com

DAILY FIELD ACTIVITIES SUMMARY REPORT		
PROJECT NAME: KAFB Well 106239 Conveyance Line Installation		
Date: 10-13-17	Time Shift Beginning: 0645	Time Shift Ending:1205
Project Number: 62599DM01		Contract/Task Order No.:
Client: USACE		Report By: Earl Morse
Contractor(s): RMCI		Project Manager: Devon Jercinovic
Design Manager:		Oversight Manager: Earl Morse
Design Engineer: George Nemeth		Site Engineer: Kevin McKeage
Weather: Clear/warm 80° F		Logbook Number: NA
Personnel Onsite:	**Name:**	**Reason for Being Onsite:**
EA	Earl Morse Kevin McKeage	Construction/Safety Oversight Construction Engineer
Wilson Electric	Jamie Perez Francisco Gonzalez	Witness pad pour
RMCI	Jerry Patton Robert BeBault Felipe Hernandez Marcos Torres Jesus Perez	General Contractor

Work Performed:

Planned Activities:

- Complete rebar install for pad
- Pour concrete for electrical pad

Completed Activities:

- Completed rebar installation and pouring of concrete for electrical

Material Deliveries:

- None

Construction Quality Control Activities or Samples Collected:

- Obtained concrete mix documentation, Oversight of concrete pour

Observations or Possible Variations from Specifications:

- None

Anticipated Activities for the Following Day:

- HDD boring
- Continue HDD prep

Planned Material Deliveries:

- None

Contractor Reports, Manifests, Documents Reviewed and Logged:	
None	
Report Completed By:	
Earl Morse	Date: 13 October 2017

DAILY REPORT

(ATTACH ADDITIONAL SHEETS IF NECESSARY)

CONTRACT NAME:	Kirtland AFB Bulk Fuels Facility Expansion of Dissolved Plume GWTS Design	REPORT NO:	010
CONTRACT NUMBER:	W912DR-12-D-0006	REPORT DATE:	13 OCT 17
REVISION NUMBER:	-	REVISION DATE:	-
TASK ORDER NUMBER:	DM01	PROJECT NAME / LOCATION:	Kirtland BFF
PROJECT NUMBER:	62599DM01	PROJECT DESCRIPTION:	Installation of KAFB-106239 Conveyance Line
PROJECT MANAGER:	Devon Jercinovic	FIELD QUALITY MANAGER:	Kevin McKenna
CONSTRUCTION MANAGER:	Earl Morse	SITE SAFETY MANAGER:	Earl Morse

AM WEATHER:	Clear Cool	PM WEATHER:	Clear Warm	MAX TEMP (F):		

SUMMARY OF WORK PERFORMED TODAY

CQM Inspection of Concrete form and delivery.

HEALTH AND SAFETY REPORT

SAFETY ACTIONS TAKEN TODAY/SAFETY INSPECTIONS CONDUCTED (Include Observations, Safety Violations, Corrective Instructions Given, Corrective Actions Taken, and Results of Safety Inspections Conducted:

See Construction Manager's Daily Report

TAILGATE TOPICS:

"

SAFE BEHAVIOR OBSERVATIONS/SELF-ASSESSMENTS:

"

OPERATIONS/PRODUCTION REPORT

WORK FORCE – CONTRACTOR AND SUBCONTRACTOR

Company	Cumulative Total of Work Hours From Previous Report	Total Hours Today	Total Work Hours From Start of Injection Event
See CM's Daily Report			

EQUIPMENT ON HAND

Description of Equipment	Make/Model/ Manufacturer	Equipment ID Number	Inspection Performed By
Water Truck	Colorado Kenworth	4610	Robert Belmont
Loader	Volvo L-120	2310	Jesus Moya
Excavator	Komatsu PC-200	1607	Jesus Moya
HDPE Welder	McElroy Tracstar	8617	Not in Use
HDPE Welder	McElroy Tracstar	8618	Not in Use
Backhoe	John Deere 310SJ	1415	Not in Use

COMMENTS (acceptance status, inspection findings, etc.):

OK

WORK AND/OR TESTS ACCOMPLISHED OR IN PROGRESS

Performed Work/Test for Today: See Construction Manager's Daily Report

Planned Work/Test for Tomorrow: "

Planned Work/Test for Next Week: "

CHANGED CONDITIONS/DELAY/CONFLICTS ENCOUNTERED (List any conflicts with the project [i.e., scope of work and/or drawings], delays to the project attributable to site and weather conditions, etc. "

VISITORS AND DISCUSSIONS: "

QUALITY CONTROL REPORT

MATERIALS DELIVERED TO JOB SITE

Quantity/Volume/ Weight	Description of Materials Received	Make/Model/ Manufacturer	Material Lot Number	Inspection Performed By
2.5 cu yards	52.17 COA 4000psi Concrete	Duke City Redimix	52067	KM

COMMENTS (acceptance status, inspection findings, etc.): Meets Mix Design

INSPECTIONS PERFORMED

Task/Activity Inspected	Inspection Performed	Findings
Concrete Form	Visual Inspection	OK
Concrete Mix	Compared to Submittal	Pass - OK

TESTS PERFORMED

Task/Activity Tested	Test Performed	Test Results (Pass/Fail) - Criteria
None		

QUALITY ISSUES AND RESOLUTIONS: None

SUBMITTALS INSPECTION / REVIEW

Submittal No.	Submittal Description	Specification/Plan Reference	Submittal Approved?		Comment/Reason/Action
NA	Daily Report	–	Yes ☐	No ☐	Pending
NA	SBO	–	Yes ☐	No ☐	Pending
NA	PTSP	–	Yes ☐	No ☐	Pending

REGULATORY COMPLIANCE REPORT							
PERMIT INSPECTIONS PERFORMED: None							
WASTE ACCUMULATION/STOCKPILE AREA INSPECTION							
Inspection Performed By:	NA			Signature of Inspector:			
Accumulation / Stockpile Area Inspected:							
No of Bins:		No of Tankers		No of Roll-Off Boxes:		No. of Tanks	
Inspection Results NA							
GENERAL COMMENTS							
General Comments: (rework, directives, etc.): OK							
ATTACHMENTS							
List of Attachments: (examples, as applicable: submittals, meeting minutes, safety meeting minutes, COCs, weight tickets, manifests, profiles, rework item list, RFIs, DCNs, photographs, etc.): Photo log + Concrete Receipt.							
NOTE: Write all entries legibly in ink. Line out all unused portions or designate as "not applicable". Preparer signs first and last name on each completed daily report. This form may be filled out electronically and signed electronically.				PREPARER'S SIGNATURE		13 OCT 17 DATE	

Location: VA Lot
Description: Pad Southeast Corner Depth
Date: 13 October 2017 Direction: North

Location: VA Lot
Description: Rebar Spacing
Date: 13 October 2017 Direction: Down

Location: VA Lot
Description: Pad Northwest Corner Depth
Date: 13 October 2017 Direction: East

Location: Field Trailer
Description: Concrete Form Prior to Pour
Date: 13 October 2017 Direction: Northwest

Location: VA Lot
Description: Pad Following Pour (Prior to Finishing)
Date: 13 October 2017 Direction: North

DUKE CITY REDI-MIX, LLC

P.O. Box 250 • Moriarty, NM 87035
(505) 877-5777
7705 Broadway SE • Albuquerque, NM 87105

DUE TIME	DATE	TICKET NUMBER	PLANT
ASAP	07/13/2017	304792	Duke City
ORDER #	LOAD SIZE	QUANTITY DELIVERED	QUANTITY ORDERED
32	2.50	2.50	2.50
SOLD TO: RMCI	P.O. #	TRUCK/DRIVER	LEAVE PLANT
		117 JIMMY	10:10
DELIVERY ADDRESS: Ridgecrest Loop and Ridge		SLUMP: 4	FINISH POUR
			ARRIVE JOB
			LEAVE JOB
			BEGIN POUR
			ARRIVE PLANT

INSTRUCTIONS: ADDED: 87 GAL

WATER ADDED AT CUSTOMER'S REQUEST

FULL LOAD	3/4 LOAD	1/2 LOAD	1/4 LOAD
GALS	GALS	GALS	GALS
CYLINDER TAKEN? ❑ YES ❑ NO	% AEA	SLUMP	TEMP

PRODUCT CODE	PRODUCT DESCRIPTION	QUANTITY	UNIT OF MEASURE	UNIT PRICE	AMOUNT
52.17 SL.	4000 CDA 7/8" AEA Short Load Fee	2.50 1.0	CU Y Each		
	SHORT LOAD				
	Checkout our web site at www.dukecityredimix.com				

CAUTION: Freshly mixed cement, mortar, or grout may cause skin injury. Avoid contact with skin whenever possible and wash exposed skin areas promptly with water. If cement or cement mixture gets into the eyes wash immediately with water and get prompt medical attention.

Release of Liability: It is the best judgement of our driver that damage to this property or surrounding area may result upon entering. You hereby authorize him to enter and accept full responsibility for said damage.

Additional Terms: You agree to pay Duke City Redi-Mix, LLC reasonable attorney's fees and costs related to any collection efforts.

TERMS: C.O.D. NET 10 DAYS AFTER STATEMENT WITH APPROVED CREDIT. TERMS AND CONDITIONS ON BACK OF THIS FORM ARE AGREED TO IN FULL. ALL ACCOUNTS NOT PAID IN ACCORDANCE WITH THE TERMS AND CONDITIONS HEREIN WILL BE CHARGED INTEREST AT A RATE OF 1-1/2% OF THE UNPAID BALANCE PER MONTH (18% PER ANNUM).

When you provide a check as payment, you authorize us to use information from your check to make a one-time electronic fund transfer from your account or to process the payment as a check transaction. When we use information from your check to make an electronic fund tranfer, funds may be withdrawn from your account as soon as the same day you make your payment, and you will not receive your check back from your financial institution. For inquiries, please call Duke City Redi-Mix Business Office 505-832-6800.

SUBTOTAL	
TAX	
TOTAL	
PREVIOUS BALANCE	
GRAND TOTAL	

X _____
CUSTOMER'S SIGNATURE

❑ CASH ❑ CHECK
❑ CREDIT CARD

CONTROL NUMBER
D 275817

Any addition of an unauthorized product to this load of concrete voids any warranty written or implied.

BATCH ID 52067

CUSTOMER

Plant	: Duke City				
Start Time	: 10/13/17 09:53:03	|	End Time	:	10/13/17 09:54:21
Product Code	: 52.17	|	Destination	:	Loadout
Load Size	: 2.50	|	Ticket	:	204792
Truck No.	: 117	|	Load Id	:	52067
Job	: 32	|	Customer	:	RMCI
Water Trim	: -7.5 gal	|	Allowable Water	:	19.05
Ideal W/C	: 0.3736	|	Acutal W/C	:	0.2791

MATERIAL	DESIGN	TARGET		ACTUAL		MST	ABS
7/8	1235.00	3133.81	lb	3120.00	lb	1.50%	0.00%
3/8 cr	546.00	1389.57	lb	1440.00	lb	1.80%	0.00%
SAND	1091.00	2782.05	lb	2820.00	lb	2.00%	0.00%
CEMENT	566.00	1415.00	lb	1415.00	lb		
FLYASH	160.00	400.00	lb	445.00	lb		
WATER	32.50	47.47	gal	47.00	gal		
AEA	8.50	21.25	floz	22.00	floz		
WR Typ A	36.30	90.75	floz	92.00	floz		

EA Engineering, Science, and Technology, Inc

Employee/Visitor Register and Safety Brief				
Date: 10-13-2017				
Site Entry/Exit		Name (Printed)	Signature	Company
Time In	Time Out			
7:00	1205	Jerry Patton	Jerry Patton	RMCI
7:00		Robert Bebault	Robert Bebault	RMCI
7:00		Jesus Moya	Jesus Moya	RMCI
7:00		Felipe Hernandez	Felipe Hernandez	RMCI
7:00	↓	Marcos Torres	Marcos Torres	RMCI
7:00	1100	Francisco Gonzalez	Francisco Gonzalez	Wilson
7:00	1100	Jaime Trevino Perez	Jaime Trevino Perez	Wilson Electric
0700	1230	Earl Morse	Earl Morse	EA
730	0830	Robert Arrell	Robert Arrell	RMCI
0815	1115	Kevin McKeage	Kevin McKeage	EA

EA ENGINEERING, SCIENCE AND TECHNOLOGY, INC.
SAFETY MEETING REPORT

Date: 10-13-2017	**Time:** 0700	**Duration of meeting:** 10	**Project #** 62599DM01
Location: 106239 Conveyance Line		**Task:** Concrete pad / Pipe welding (HDPE)	

Type of meeting: X **Daily** ___ **Weekly** ___ **Monthly** ___ **Other:** _____

Items/Issues discussed:

1. Basic PPE
2. Eye Protection
3. Hearing Protection
4.
5.

Attach minutes of safety meeting if taken.

Safety questions/issues raised:	Actions/Follow-up needed:
1. None	
2.	
3.	
4.	
5.	
6.	

Remarks: None

Meeting conducted by: Earl Morse

EA Engineering, Science, and Technology, Inc.

DAILY SAFETY INSPECTION CHECKLIST
(TO BE COMPLETED EACH DAY OF CONSTRUCTION OR HTRW SITE ACTIVITIES)

Site: 106239 Conveyance Line
Location: Albuquerque, NM
Project No.: 62599DM01.1009
Client: USACE

Prepared by SSHO: Frank Morse
Project Manager: Devon Sencindiver
Date: 10-13-17

Rating	Y	N	N/A	Comments/Immediate Corrective Action[1]
Accident Prevention Plan (APP) and Site Safety and Health Plan (SSHP) General Requirements				
Are there new onsite personnel? • Did they receive pre-entry briefing and are their names recorded in field logbook or daily log? • Was the USACE PM made aware of the new personnel. • Required training and medical surveillance documentation received (e.g., 40-hr, 8 hr, etc.)?		✓		
Did personnel sign in/out of site?	✓			
Daily tailgate safety meetings conducted and documented?	✓			
Were new activities performed today? Were hazards identified, discussed during the daily safety tailgate, and incorporated into revised APP/SSHP?		✓		
New materials brought on site? MSDSs available?		✓		
Exclusion (EZ), Contamination Reduction (CRZ), and Support Zones (SZ) delineated and enforced?			✓	
General housekeeping measures in place to prevent hazards?	✓			
Emergency Planning				
Were there any changes to emergency contact names, telephone numbers, or hospital? If so, were site personnel made aware and was information distributed/reposted.		✓		
Adequate safety equipment inventory available?	✓			
Fire extinguisher available (monthly inspection of extinguisher will suffice)	✓			
Eyewash station(s) functioning and in place (weekly inspection of eye wash station will suffice)?	✓			
First aid supplies available (weekly inspection of first aid kit will suffice)?	✓			
Communication equipment readily available for emergencies?	✓			
Any reported accidents/incidents at this site? If so, were accident reporting procedures followed?		✓		
Air Monitoring				
Monitoring equipment specified in SSHP available and in working order? Air monitoring instrumentation for this site includes – check each if required/on site, note deficiencies in comments: • Combustible gas meter • Organic vapor analyzer • Contaminant specific analyzer for benzene (if total organic vapor concentrations exceed 0.5 ppm)			✓	
Monitoring equipment calibrated and calibration records			✓	

Y = Satisfactory or Yes; N = Unsatisfactory or No, N/A = Not applicable

Rating	Y	N	N/A	Comments/Immediate Corrective Action[1]
available?				
Environmental and personnel monitoring performed as specified in SSHP?	✓			Noise
PPE				
Proper dermal protection worn by EA and subcontracted employees when handling/ contacting hazardous chemicals or contaminated environmental media?	✓			
Required PPE (hard hats, safety boots / shoes, eye protection with side shields, hearing protection) being worn by EA and subcontracted employees?	✓			
PPE inspection completed by SSHO?	✓			
Drill Rig Operations				
Daily rig inspection completed? Any equipment problems?			✓	
Drill rigs/elevated equipment maintaining minimum 10-ft distance from energized (50 kV) overhead power lines?			✓	
Investigation-derived Waste (IDW)				
Wastes properly staged, secured, and labeled at end of day?	✓			

Additional Comments:

Site Safety and Health Officer's Signature

10-13-2017
Date

[1]If a deficiency is noted that cannot be immediately corrected, the SSHO will monitor the progress in correcting the deficiency and will document following:

- Date the deficiency was identified
- Description of the deficiency
- Name of the person responsible for correcting the deficiency
- Projected date of correction
- Actual date of correction.

HEALTH AND SAFETY ACTIVITY REPORT

Site: 106239 Conveyance Line Location: ABQ, NM

Weather Cond.: Partly Cloudy, Warm 72° Onsite Hours: From 0645 To 1205

Changes in PPE Levels[1]	Work Operations	Reasons for Change
None		

Site Safety and Health Plan Violations	Corrective Action Specified	Corrective Action Taken [2](yes/no)
None		

Observations and Comments:

None

Completed by: _____ Date: 10-13-2017

Site Health and Safety Supervisor

[1]Only SSHO may change PPE levels, using only criteria specified in APP/SSHP.

[2]If a deficiency is noted that cannot be immediately corrected, the SSHO will monitor the progress in correcting the deficiency and will document following:

- Date the deficiency was identified
- Description of the deficiency
- Name of the person responsible for correcting the deficiency
- Projected date of correction
- Actual date of correction.

ENVIRONMENTAL MONITORING RECORD

SITE: KAFB-106239 Conveyance Line Installation

PROJECT NO.: 62599DM01

INSTRUMENT: Noisepro DCX #2804

Time	Monitoring Location	Reading	Corrective Action Taken[a]
0730	Calibration 114.0db	114.0db	
0735	Site background	65.0db	
0750	Concrete saw @ 5'	93.0db	
0750 - 0800	Traffic by site	72db - 84db	
1034	Concrete pour @ truck	82db max	

Comments: N = North, E = East, S = South, W = West

(a) Corrective actions taken must be documented whenever readings at or above action levels are reached. Monitoring equipment and action levels are specified in Section 9.33 of the Accident Prevention Plan.

Recorded By: Ed Mann
Site Health & Safety Officer

Date: 10-13-17

From:	Curley, Tyler
To:	"Amy.E.Sanchez@usace.army.mil"; "Trent.Simpler@usace.army.mil"; "Carlos.F.Salazar@usace.army.mil"; "Mark.J.Phaneuf@usace.army.mil"; "Linda.Dreeland@usace.army.mil"
Cc:	Jercinovic, Devon; McKeage, Kevin
Subject:	Daily Report for KAFB Well 106239 Conveyance Line Installation 16 October 2017
Date:	Monday, October 16, 2017 6:40:52 PM
Attachments:	Daily Field Activities Summary Report.pdf Photos 10-16-17.pdf

---

Issues Today Monday 16 October 2017:

- Work was halted for approximately 1 hour by the Albuquerque Police Department (APD) due to a suspicious object near a residence that had to be inspected by the bomb squad
- While pulling the conveyance line casing through the boring, the pipe rotated so the leak detection is rotated approximately 90 degree clockwise from the bottom of the pipe

Resolution of Issues:

- Work resumed after APD issued the ALL CLEAR
- RMCI is working on a method to turn the pipe so the leak detection is located on the bottom

Work Performed Today:

- Removed formwork from the electrical pad
- Completed HDD under the SAS line
- Pulled conveyance line and conduits through the HDD boring from Sta 4+65 through 5+85

Installation Completion to Date: 7%

Work Planned for 17 Oct 2017:

- Continue HDD
- Prep for trenching
- Weld pipe on base for HDD under Louisiana

Please let me know if you need additional information.

Tyler Curley, P.E.
EA Engineering, Science, and Technology, Inc., PBC
320 Gold Avenue, SW Suite 1300
Albuquerque, NM 87120
(505) 715-4422 work
(719) 688-9558 cell
tcurley@eaest.com

DAILY FIELD ACTIVITIES SUMMARY REPORT		
PROJECT NAME: KAFB Well 106239 Conveyance Line Installation		
Date: 10-16-17	Time Shift Beginning: 0700	Time Shift Ending:1620
Project Number: 62599DM01		Contract/Task Order No.:
Client: USACE		Report By: Tyler Curley
Contractor(s): RMCI		Project Manager: Devon Jercinovic
Design Manager:		Oversight Manager: Tyler Curley
Design Engineer: George Nemeth		Site Engineer: Tyler Curley
Weather: Sunny 70° F		Logbook Number: NA
Personnel Onsite:	**Name:**	**Reason for Being Onsite:**
EA	Tyler Curley Earl Morse Dustin Graves Kevin McKeage Pete Ferrari	Construction/Safety Oversight Construction/Safety Oversight Site Visit Equipment Inspection Field Assistance
USACE	Amy Sanchez	Site Inspection/Oversight
RMCI	Ed Hyde Jerry Patton Phillip Johnson Felipe Hernandez Robert BeBault Jesus Moya Marcos Torres	General Contractor
Bixby Electric	Manuel DeLeon Jasper Apachito Chris McMilin	HDD (RMCI Sub)

Work Performed:

Planned Activities:

- Start HDD
- Continue HDD prep

Completed Activities:

- Removed formwork from the electrical pad
- Completed HDD under the SAS line
- Pulled conveyance line and conduits through the HDD boring

Material Deliveries:

- PVC electrical conduit

Construction Quality Control Activities or Samples Collected:

- None

Observations or Possible Variations from Specifications:

- None

Anticipated Activities for the Following Day:	
• Continue HDD • Prep for trenching • Weld pipe on base for HDD under Louisiana **Planned Material Deliveries:** • PVC electrical conduit	
Contractor Reports, Manifests, Documents Reviewed and Logged:	
None	
Report Completed By:	
Tyler Curley	Date: 16 October 2017

EA Engineering, Science, and Technology, Inc

Employee/Visitor Register and Safety Brief				
Date: 10-16-2017				
Site Entry/Exit		Name (Printed)	Signature	Company
Time In	Time Out			
7:00	1610	Robert BeBault		RMCI
7:0	1610	Marcos Torres		RMCI
7:00	1615	Jerry Patton		RMCI
7:00	1610	Felipe Hernandez		RMCI
7:00	1610	Jesus Moya		RMCI
7:00	1620	Manuel DeLeon		Bixby
7:00	1000	Earl Morse		EA
7:00	1620	Tyler Corley		
7:12	1600	Jasper Apachito		Bixby
8:05	0930	Kevin McKye		EA
8:10	1700	Dale Reames		Ditch Witch
10:17	10:20	Tom Wapelhorst		Wilson Elec
1030	1040	Robert Harris		RMCI
300	15:07	Amy Sanchez		USACE
0450	1500	Dustin Brown		EA
1440	1500	Pete Ferrand		EA
1510	1600	Chris McMillin		Bixby

EA ENGINEERING, SCIENCE AND TECHNOLOGY, INC.
SAFETY MEETING REPORT

Date: 10-16-17	**Time:** 0700	**Duration of meeting:** 10 min	**Project #** 605901.001
Location: KAFB Well 106239		**Task:** Conveyance Line Install	

Type of meeting: X **Daily** ___ **Weekly** ___ **Monthly** ___ **Other:**_____

Items/Issues discussed:

1. Slips, trips, falls
2. pinch point
3. Moving equipment
4. traffic
5. snakes, insects, stray dogs

Attach minutes of safety meeting if taken.

Safety questions/issues raised:	**Actions/Follow-up needed:**
1. None	
2.	
3.	
4.	
5.	
6.	

Remarks: None

Meeting conducted by:

Tyler Curley

EA Engineering, Science, and Technology, Inc.

DAILY SAFETY INSPECTION CHECKLIST (TO BE COMPLETED EACH DAY OF CONSTRUCTION OR HTRW SITE ACTIVITIES)

Site: KAFB Well 106239
Location: Ridgecrest Area Dr
Project No.: G3599DM01
Client: USACE

Prepared by SSHO: Tyler Curley
Project Manager: Devon Jerčinović
Date: 10-16-17

Rating	Y	N	N/A	Comments/Immediate Corrective Action[1]
Accident Prevention Plan (APP) and Site Safety and Health Plan (SSHP) General Requirements				
Are there new onsite personnel? • Did they receive pre-entry briefing and are their names recorded in field logbook or daily log? • Was the USACE PM made aware of the new personnel. • Required training and medical surveillance documentation received (e.g., 40-hr, 8 hr, etc.)?		✓		
Did personnel sign in/out of site?	✓			
Daily tailgate safety meetings conducted and documented?	✓			
Were new activities performed today? Were hazards identified, discussed during the daily safety tailgate, and incorporated into revised APP/SSHP?	✓			HDD
New materials brought on site? MSDSs available?		✓		
Exclusion (EZ), Contamination Reduction (CRZ), and Support Zones (SZ) delineated and enforced?	✓			
General housekeeping measures in place to prevent hazards?	✓			
Emergency Planning				
Were there any changes to emergency contact names, telephone numbers, or hospital? If so, were site personnel made aware and was information distributed/reposted.		✓		
Adequate safety equipment inventory available?	✓			
Fire extinguisher available (monthly inspection of extinguisher will suffice)	✓			
Eyewash station(s) functioning and in place (weekly inspection of eye wash station will suffice)?	✓			
First aid supplies available (weekly inspection of first aid kit will suffice)?	✓			
Communication equipment readily available for emergencies?	✓			
Any reported accidents/incidents at this site? If so, were accident reporting procedures followed?		✓		
Air Monitoring				
Monitoring equipment specified in SSHP available and in working order? Air monitoring instrumentation for this site includes – check each if required/on site, note deficiencies in comments: • Combustible gas meter • Organic vapor analyzer • Contaminant specific analyzer for benzene (if total organic vapor concentrations exceed 0.5 ppm)	✓			
Monitoring equipment calibrated and calibration records	✓			

Y = Satisfactory or Yes; N = Unsatisfactory or No, N/A = Not applicable

Rating	Y	N	N/A	Comments/Immediate Corrective Action[1]
available?	✓			
Environmental and personnel monitoring performed as specified in SSHP?	✓			
PPE				
Proper dermal protection worn by EA and subcontracted employees when handling/ contacting hazardous chemicals or contaminated environmental media?	✓			
Required PPE (hard hats, safety boots / shoes, eye protection with side shields, hearing protection) being worn by EA and subcontracted employees?	✓			
PPE inspection completed by SSHO?	✓			
Drill Rig Operations				
Daily rig inspection completed? Any equipment problems?	✓			
Drill rigs/elevated equipment maintaining minimum 10-ft distance from energized (50 kV) overhead power lines?	✓			
Investigation-derived Waste (IDW)				
Wastes properly staged, secured, and labeled at end of day?			✓	

Additional Comments:

Site Safety and Health Officer's Signature

10-10-17
Date

[1]If a deficiency is noted that cannot be immediately corrected, the SSHO will monitor the progress in correcting the deficiency and will document following:

- Date the deficiency was identified
- Description of the deficiency
- Name of the person responsible for correcting the deficiency
- Projected date of correction
- Actual date of correction.

HEALTH AND SAFETY ACTIVITY REPORT

Site: KAFB Well 106739 Location: Ridgecrest Dr.

Weather Cond.: Sunny 70°F Onsite Hours: From 0700 To _____

Changes in PPE Levels[1]	Work Operations	Reasons for Change
None		

Site Safety and Health Plan Violations	Corrective Action Specified	Corrective Action Taken [2](yes/no)
None		

Observations and Comments:

None

Completed by: Tyler Curley Date: 10-16-17
Site Health and Safety Supervisor

[1]Only SSHO may change PPE levels, using only criteria specified in APP/SSHP.
[2]If a deficiency is noted that cannot be immediately corrected, the SSHO will monitor the progress in correcting the deficiency and will document following:

- Date the deficiency was identified
- Description of the deficiency
- Name of the person responsible for correcting the deficiency
- Projected date of correction
- Actual date of correction.

ENVIRONMENTAL MONITORING RECORD

SITE: KAFB-106239 Conveyance Line Installation

PROJECT NO.: 62599DM01

INSTRUMENT: Noise Pro Series / Thermo Electron Corp

Time	Monitoring Location	Reading	Corrective Action Taken[a]
1440	Noise Pro Series	114.0	
1440	Particulate Mete	0.0	
14.55	5 + 00	69.1 / 0.007 mg/m³	
1458	7 + 00	71.3 dBa / 0.015 mg/m³	

Comments: N = North, E = East, S = South, W = West

(a) Corrective actions taken must be documented whenever readings at or above action levels are reached. Monitoring equipment and action levels are specified in Section 9.33 of the Accident Prevention Plan.

Recorded By: Pete Ferrari
Site Health & Safety Officer

Date: 10-16-17

From:	Curley, Tyler
To:	"Amy.E.Sanchez@usace.army.mil"; "Trent.Simpler@usace.army.mil"; "Carlos.F.Salazar@usace.army.mil"; "Linda.Dreeland@usace.army.mil"; "Mark.J.Phaneuf@usace.army.mil"
Cc:	Jercinovic, Devon; McKeage, Kevin; Morse, Earl; Bowman, Matthew
Subject:	Activity Report for KAFB Well 106239 Conveyance Line Installation 17 October 2017
Date:	Tuesday, October 17, 2017 7:22:28 PM
Attachments:	Daily Field Activities Summary Report.pdf Photos 10-17-17.pdf

---

Issues Today Tuesday 17 October 2017:

- While pulling the conveyance line casing through the boring (10-16-17), the pipe rotated so the leak detection is rotated approximately 90 degree clockwise from the bottom of the pipe. RMCI was not able to rotate the pipe to get the leak detection wire on the bottom
- The pull wire used to connect the pull rope broke during retrieval

Resolution of Issues:

- RMCI rotated each addition joint (2 pipe joints) 1/8 turn until the leak detection was located on the bottom of the pipe
- The pipe was cut, pull rope was retrieved, and the pipe was rewelded

Work Performed Today:

- Started trenching from Sta 4+65 back to the well head
- Welded 120 linear feet of HDPE conveyance line
- Created new entry into the contractor yard while track out pad is being excavated
- Removed remaining drilling mud from bore pits

Installation Completion to Date: 8%

Work Planned for 18 Oct 2017:

- Continue HDD
- Continue trenching
- Install conveyance piping and electrical conduits
- Cap electrical conduits with concrete
- Weld Conveyance pipe

Please let me know if you need additional information.

Tyler Curley, P.E.
EA Engineering, Science, and Technology, Inc., PBC
320 Gold Avenue, SW Suite 1300
Albuquerque, NM 87120
(505) 715-4422 work
(719) 688-9558 cell
tcurley@eaest.com

DAILY FIELD ACTIVITIES SUMMARY REPORT		
PROJECT NAME: KAFB Well 106239 Conveyance Line Installation		
Date: 10-17-17	Time Shift Beginning: 0700	Time Shift Ending:1530
Project Number: 62599DM01		Contract/Task Order No.:
Client: USACE		Report By: Tyler Curley
Contractor(s): RMCI		Project Manager: Devon Jercinovic
Design Manager:		Oversight Manager: Tyler Curley
Design Engineer: George Nemeth		Site Engineer: Tyler Curley
Weather: Sunny 75° F		Logbook Number: NA
Personnel Onsite:	**Name:**	**Reason for Being Onsite:**
EA	Tyler Curley Pete Ferrari	Construction/Safety Oversight Field Assistance
USACE	Trent Simpler	Site Inspection/Oversight
RMCI	Ed Hyde Jerry Patton Phillip Johnson Felipe Hernandez Robert BeBault Jesus Moya Marcos Torres	General Contractor
Bixby Electric	Cameron Gutierrez Jasper Apachito	HDD (RMCI Sub)
Harrington	Koichi Harata	Site Visit with RMCI
Asahi America	Robert Cosgrove Chris Acosta	Site Visit with RMCI

Work Performed:

Planned Activities:

- Continue HDD
- Prep for trenching
- Weld pipe on base for HDD under Louisiana

Completed Activities:

- Started trenching from Sta 4+65 back to the well head (completed approximately 10-feet)
- Welded 120 linear feet of HDPE conveyance line (Sta 3+45 – 4+65
- Created new entry into the contractor yard while track out pad is being excavated
- Removed remaining drilling mud from bore pits

Material Deliveries:

- None

Construction Quality Control Activities or Samples Collected:

- None

Observations or Possible Variations from Specifications:

- None

Anticipated Activities for the Following Day:	
• Continue HDD • Continue trenching • Install conveyance piping and electrical conduits • Cap electrical conduits with concrete • Weld Conveyance pipe **Planned Material Deliveries:** • None	
Contractor Reports, Manifests, Documents Reviewed and Logged:	
None	
Report Completed By:	
Tyler Curley	Date: 17 October 2017

TRACSTAR
McELROY

KOMATSU

EA Engineering, Science, and Technology, Inc

Employee/Visitor Register and Safety Brief				
Date: 10-17-17				
Site Entry/Exit		Name (Printed)	Signature	Company
Time In	Time Out			
0700	1530	Tyler Curley		EA
7:00	1530	Robert BeBarlt		RMCI
7:00	1530	MARCOS TORRES		RMCI
7:00	1530	Felipe Hernandez		RMCI
7:00	1530	Jesus Moya		RMCI
7:00	1530	Jerry Patton		RMCI
7:00	1530	[illegible]		RMCI
7:44	0939	Jasper Apachito		Bixby
7:45	0939	Cameron Gutierrez		Bixby
8:20	1030	Phillip Johnson		RMCI
8:54	1000	Robert Cosgrove		Asahi/Kasuga
8:58	1000	Koichi Harada		HARRINGTON
859	1000	CHRIS ACOSTA		IA
1004	1120	Pete Ferrari		USACE
1145	1217	T Simpler		

EA ENGINEERING, SCIENCE AND TECHNOLOGY, INC.
SAFETY MEETING REPORT

Date: 10-17-17	**Time:** 0700	**Duration of meeting:** 10 min	**Project #** 605qaDM01
Location: KAFB Well 106239		**Task:** Conveyance Line Install	

Type of meeting: _X_ **Daily** ____ **Weekly** ____ **Monthly** ____ **Other:**_____

Items/Issues discussed:

1. Slips trips falls
2. Hospital route
3. Moving equipments
4. Pinch points / hot points
5.

Attach minutes of safety meeting if taken.

Safety questions/issues raised:	**Actions/Follow-up needed:**
1. None	
2.	
3.	
4.	
5.	
6.	

Remarks: None

Meeting conducted by:
Tyler Curley

EA Engineering, Science, and Technology, Inc.

DAILY SAFETY INSPECTION CHECKLIST (TO BE COMPLETED EACH DAY OF CONSTRUCTION OR HTRW SITE ACTIVITIES)

Site: KAFB Well 106239
Location: Ridgecrest Dr
Project No.: G2599DM01
Client: USACE

Prepared by SSHO: Tyler Curley
Project Manager: Devon Jercinovic
Date: 10-17-17

Rating	Y	N	N/A	Comments/Immediate Corrective Action[1]
Accident Prevention Plan (APP) and Site Safety and Health Plan (SSHP) General Requirements				
Are there new onsite personnel? • Did they receive pre-entry briefing and are their names recorded in field logbook or daily log? • Was the USACE PM made aware of the new personnel. • Required training and medical surveillance documentation received (e.g., 40-hr, 8 hr, etc.)?		✓		
Did personnel sign in/out of site?	✓			
Daily tailgate safety meetings conducted and documented?	✓			
Were new activities performed today? Were hazards identified, discussed during the daily safety tailgate, and incorporated into revised APP/SSHP?		✓		
New materials brought on site? MSDSs available?		✓		
Exclusion (EZ), Contamination Reduction (CRZ), and Support Zones (SZ) delineated and enforced?	✓			
General housekeeping measures in place to prevent hazards?	✓			
Emergency Planning				
Were there any changes to emergency contact names, telephone numbers, or hospital? If so, were site personnel made aware and was information distributed/reposted.		✓		
Adequate safety equipment inventory available?	✓			
Fire extinguisher available (monthly inspection of extinguisher will suffice)	✓			
Eyewash station(s) functioning and in place (weekly inspection of eye wash station will suffice)?	✓			
First aid supplies available (weekly inspection of first aid kit will suffice)?	✓			
Communication equipment readily available for emergencies?	✓			
Any reported accidents/incidents at this site? If so, were accident reporting procedures followed?		✓		
Air Monitoring				
Monitoring equipment specified in SSHP available and in working order? Air monitoring instrumentation for this site includes – check each if required/on site, note deficiencies in comments: • Combustible gas meter • Organic vapor analyzer • Contaminant specific analyzer for benzene (if total organic vapor concentrations exceed 0.5 ppm)	✓			
Monitoring equipment calibrated and calibration records	✓			

Y = Satisfactory or Yes; N = Unsatisfactory or No, N/A = Not applicable

Rating	Y	N	N/A	Comments/Immediate Corrective Action[1]
available?				
Environmental and personnel monitoring performed as specified in SSHP?	✓			
PPE				
Proper dermal protection worn by EA and subcontracted employees when handling/ contacting hazardous chemicals or contaminated environmental media?	✓			
Required PPE (hard hats, safety boots / shoes, eye protection with side shields, hearing protection) being worn by EA and subcontracted employees?	✓			
PPE inspection completed by SSHO?	✓			
Drill Rig Operations				
Daily rig inspection completed? Any equipment problems?	✓			
Drill rigs/elevated equipment maintaining minimum 10-ft distance from energized (50 kV) overhead power lines?	✓			
Investigation-derived Waste (IDW)				
Wastes properly staged, secured, and labeled at end of day?			✓	

Additional Comments:

Site Safety and Health Officer's Signature

10-17-17
Date

[1]If a deficiency is noted that cannot be immediately corrected, the SSHO will monitor the progress in correcting the deficiency and will document following:

- Date the deficiency was identified
- Description of the deficiency
- Name of the person responsible for correcting the deficiency
- Projected date of correction
- Actual date of correction.

HEALTH AND SAFETY ACTIVITY REPORT

Site: KAFB Well 106239 Location: Ridgecrest Dr

Weather Cond.: Sunny 75°F Onsite Hours: From 0700 To _____

Changes in PPE Levels[1]	Work Operations	Reasons for Change
None		

Site Safety and Health Plan Violations	Corrective Action Specified	Corrective Action Taken [2](yes/no)
None		

Observations and Comments:
None

Completed by: Tyler Curley Date: 10-17-17
Site Health and Safety Supervisor

[1]Only SSHO may change PPE levels, using only criteria specified in APP/SSHP.
[2]If a deficiency is noted that cannot be immediately corrected, the SSHO will monitor the progress in correcting the deficiency and will document following:

- Date the deficiency was identified
- Description of the deficiency
- Name of the person responsible for correcting the deficiency
- Projected date of correction
- Actual date of correction.

ENVIRONMENTAL MONITORING RECORD

SITE: KAFB-106239 Conveyance Line Installation

PROJECT NO.: 62599DM01

INSTRUMENT: Thermo Dust meter/Noise Pro Series

Time	Monitoring Location	Reading	Corrective Action Taken[a]
1008	Calibration Readings	113.8 dBa/0.003 mg/m³	
1012	sta 5+00	65.5 dBa/0.006 mg/m³	
1016	sta 6+00	70.3 dBa/0.013 mg/m³	
1430	sta 5+00	65.1 dBa/0.004 mg/m³	
1434	sta 4+00	71.0/0.001 mg/m³	

Comments: N = North, E = East, S = South, W = West

(a) Corrective actions taken must be documented whenever readings at or above action levels are reached. Monitoring equipment and action levels are specified in Section 9.33 of the Accident Prevention Plan.

Recorded By: Pete Ferrari
Site Health & Safety Officer

Date: 10-17-17

From:	Curley, Tyler
To:	"Amy.E.Sanchez@usace.army.mil"; "Trent.Simpler@usace.army.mil"; "Carlos.F.Salazar@usace.army.mil"; "Linda.Dreeland@usace.army.mil"; "Mark.J.Phaneuf@usace.army.mil"
Cc:	Jercinovic, Devon; McKeage, Kevin; Morse, Earl; Bowman, Matthew; Rief, Lucas
Subject:	Activity Report for KAFB Well 106239 Conveyance Line Installation 18 October 2017
Date:	Wednesday, October 18, 2017 6:03:40 PM
Attachments:	Photos 10-18-17.pdf Daily Field Activities Summary Report.pdf

---

Issues Today Wednesday 18 October 2017:

- None

Resolution of Issues:

- None

Work Performed Today:

- Completed HDD and conveyance line install under Ridgecrest Dr
- Started HDD (pilot hole) under Kentucky St
- Trenched and installed conveyance line and conduit from Sta 3+00 through Sta 4+65
- Concrete encased electrical conduits from Sta 3+50 through Sta 4+65

Installation Completion to Date: 10%

Work Planned for 19 Oct 2017:

- Continue HDD
- Continue trenching
- Install conveyance piping and electrical conduits
- Cap electrical conduits with concrete
- Weld Conveyance pipe
- Begin backfilling and compaction

Please let me know if you need additional information.

Tyler Curley, P.E.
EA Engineering, Science, and Technology, Inc., PBC
320 Gold Avenue, SW Suite 1300
Albuquerque, NM 87120
(505) 715-4422 work
(719) 688-9558 cell
tcurley@eaest.com

DAILY FIELD ACTIVITIES SUMMARY REPORT		
PROJECT NAME: KAFB Well 106239 Conveyance Line Installation		
Date: 10-18-17	Time Shift Beginning: 0700	Time Shift Ending:1550
Project Number: 62599DM01		Contract/Task Order No.:
Client: USACE		Report By: Tyler Curley
Contractor(s): RMCI		Project Manager: Devon Jercinovic
Design Manager:		Oversight Manager: Tyler Curley
Design Engineer: George Nemeth		Site Engineer: Tyler Curley
Weather: Sunny 75° F		Logbook Number: NA
Personnel Onsite:	**Name:**	**Reason for Being Onsite:**
EA	Tyler Curley Earl Morse Pete Ferrari	Construction/Safety Oversight Construction/Safety Oversight Field Assistance
USACE	Amy Sanchez	Site Inspection/Oversight
RMCI	Ed Hyde Jerry Patton Phillip Johnson Felipe Hernandez Robert BeBault Jesus Moya Marcos Torres	General Contractor
Wilson Electric	Britt Crooks Jaime Perez	Electrical Contractor
Bixby Electric	Cameron Gutierrez Jasper Apachito	HDD (RMCI Sub)

Work Performed:

Planned Activities:

- Continue HDD
- Continue trenching
- Install conveyance piping and electrical conduits
- Cap electrical conduits with concrete
- Weld Conveyance pipe

Completed Activities:

- Completed HDD and conveyance line install under Ridgecrest Dr
- Started HDD (pilot hole) under Kentucky St
- Trenched and installed conveyance line and conduit from Sta 3+00 through Sta 4+65
- Concrete encased electrical conduits from Sta 3+50 through Sta 4+65

Material Deliveries:

- None

Construction Quality Control Activities or Samples Collected:

- None

Observations or Possible Variations from Specifications:

- The conveyance line and electrical conduits were installed in a single boring instead of separate borings

Anticipated Activities for the Following Day:	
• Continue HDD • Continue trenching • Install conveyance piping and electrical conduits • Cap electrical conduits with concrete • Weld Conveyance pipe • Begin backfilling and compaction **Planned Material Deliveries:** • None	
Contractor Reports, Manifests, Documents Reviewed and Logged:	
None	
Report Completed By:	
Tyler Curley	Date: 18 October 2017

RMCI INC
GENERAL CONTRACTOR

EA Engineering, Science, and Technology, Inc

Employee/Visitor Register and Safety Brief				
Date: 10-18-2017				
Site Entry/Exit		Name (Printed)	Signature	Company
Time In	Time Out			
0700	1600	EARL Morse	Earl Morse	EA
7:00	1550	Jesus Moya	Jmoya	RMCI
7:00	1550	Robert BeBout	Robert BeBout	RmcI
7:00	1550	Marcos Torres		RMCI
7:00	1600	Manuel DeLeon	Manuel De Leon	Bixby
7:00	1550	Felipe	Felipe	RMCI
7:00	1600	Jasper Apachito	Jasper Apachito	Bixby
700	1500	Jaime Trevino Perez		adsonelectric
706	1500	Britt CROOKS	BC	WILSON
7:00	1600	Jerry Patton	Jerry Pat	RmcI
7:00	1600	Tyler Curley		EA
7:10	750	ROBERT ARRELL		RMCT
9:20	1030	Phillip Johnson		RMCT
1036	1100	Pete Ferrand	Pete Ferrand	EA
2:00	1445	Amy Sanchez	Amy Sanchez	USACE

EA ENGINEERING, SCIENCE AND TECHNOLOGY, INC.
SAFETY MEETING REPORT

Date: 10-18-17	**Time:** 700	**Duration of meeting:** 10 min	**Project #** 62599.0101
Location: KAFB Well 106239		**Task:** Conveyance Line Install	

Type of meeting: _X_ **Daily** ____**Weekly** ____ **Monthly** ____ **Other:**_____

Items/Issues discussed:

1. Pinch Points
2. loose clothing near moving equipment
3. trench safety
4.
5.

Attach minutes of safety meeting if taken.

Safety questions/issues raised:	**Actions/Follow-up needed:**
1. None	
2.	
3.	
4.	
5.	
6.	

Remarks: None

Meeting conducted by:
Tyler Curley

EA Engineering, Science, and Technology, Inc.

DAILY SAFETY INSPECTION CHECKLIST (TO BE COMPLETED EACH DAY OF CONSTRUCTION OR HTRW SITE ACTIVITIES)

Site: KAFB Well 106239
Location: Ridgecrest Dr
Project No.: G2599D/M01
Client: USACE

Prepared by SSHO: Tyler Corley
Project Manager: Devon Jercinovic
Date: 10-18-17

Rating	Y	N	N/A	Comments/Immediate Corrective Action[1]
Accident Prevention Plan (APP) and Site Safety and Health Plan (SSHP) General Requirements				
Are there new onsite personnel? • Did they receive pre-entry briefing and are their names recorded in field logbook or daily log? • Was the USACE PM made aware of the new personnel. • Required training and medical surveillance documentation received (e.g., 40-hr, 8 hr, etc.)?		✓		
Did personnel sign in/out of site?	✓			
Daily tailgate safety meetings conducted and documented?	✓			
Were new activities performed today? Were hazards identified, discussed during the daily safety tailgate, and incorporated into revised APP/SSHP?		✓		
New materials brought on site? MSDSs available?	~~✓~~	✓		
Exclusion (EZ), Contamination Reduction (CRZ), and Support Zones (SZ) delineated and enforced?	✓			
General housekeeping measures in place to prevent hazards?	✓			
Emergency Planning				
Were there any changes to emergency contact names, telephone numbers, or hospital? If so, were site personnel made aware and was information distributed/reposted.		✓		
Adequate safety equipment inventory available?	✓			
Fire extinguisher available (monthly inspection of extinguisher will suffice)	✓			
Eyewash station(s) functioning and in place (weekly inspection of eye wash station will suffice)?	✓			
First aid supplies available (weekly inspection of first aid kit will suffice)?	✓			
Communication equipment readily available for emergencies?	✓			
Any reported accidents/incidents at this site? If so, were accident reporting procedures followed?				
Air Monitoring				
Monitoring equipment specified in SSHP available and in working order? Air monitoring instrumentation for this site includes – check each if required/on site, note deficiencies in comments: • Combustible gas meter • Organic vapor analyzer • Contaminant specific analyzer for benzene (if total organic vapor concentrations exceed 0.5 ppm)	✓			
Monitoring equipment calibrated and calibration records	✓			

Y = Satisfactory or Yes; N = Unsatisfactory or No, N/A = Not applicable

Rating	Y	N	N/A	Comments/Immediate Corrective Action[1]
available?				
Environmental and personnel monitoring performed as specified in SSHP?	✓			
PPE				
Proper dermal protection worn by EA and subcontracted employees when handling/ contacting hazardous chemicals or contaminated environmental media?	✓			
Required PPE (hard hats, safety boots / shoes, eye protection with side shields, hearing protection) being worn by EA and subcontracted employees?	✓			
PPE inspection completed by SSHO?	✓			
Drill Rig Operations				
Daily rig inspection completed? Any equipment problems?	✓			
Drill rigs/elevated equipment maintaining minimum 10-ft distance from energized (50 kV) overhead power lines?	✓			
Investigation-derived Waste (IDW)				
Wastes properly staged, secured, and labeled at end of day?			✓	

Additional Comments:

Site Safety and Health Officer's Signature

10-15-17
Date

[1]If a deficiency is noted that cannot be immediately corrected, the SSHO will monitor the progress in correcting the deficiency and will document following:

- Date the deficiency was identified
- Description of the deficiency
- Name of the person responsible for correcting the deficiency
- Projected date of correction
- Actual date of correction.

HEALTH AND SAFETY ACTIVITY REPORT

Site: KAFB Well 106239 Location: Ridgecrest Dr

Weather Cond.: _____ Onsite Hours: From 0700 To _____

Changes in PPE Levels[1]	Work Operations	Reasons for Change

Site Safety and Health Plan Violations	Corrective Action Specified	Corrective Action Taken [2](yes/no)

Observations and Comments:

Completed by: _____ Date:
Site Health and Safety Supervisor

[1]Only SSHO may change PPE levels, using only criteria specified in APP/SSHP.
[2]If a deficiency is noted that cannot be immediately corrected, the SSHO will monitor the progress in correcting the deficiency and will document following:

- Date the deficiency was identified
- Description of the deficiency
- Name of the person responsible for correcting the deficiency
- Projected date of correction
- Actual date of correction.

ENVIRONMENTAL MONITORING RECORD

SITE: KAFB-106239 Conveyance Line Installation

PROJECT NO.: 62599DM01

INSTRUMENT: Thermo Elec. Copp. dust monitor / Noise Pro Series noise monito

Time	Monitoring Location	Reading	Corrective Action Taken[a]
1040	calibrate Noise / Dust	114.0 dBa / 0.000 mg/m³	
1049	sta 6 +00	~~77.2~~ / 0.031	
1053	sta 5 +00	66.4 / 0.023	
1330	sta 2 +100	71.9 / 0.018	
1333	sta 3 + 100	73.2 / 0.031	

Comments: N = North, E = East, S = South, W = West

(a) Corrective actions taken must be documented whenever readings at or above action levels are reached. Monitoring equipment and action levels are specified in Section 9.33 of the Accident Prevention Plan.

Recorded By: _____ Date: _____

Site Health & Safety Officer

From:	Curley, Tyler
To:	"Trent.Simpler@usace.army.mil"; "Amy.E.Sanchez@usace.army.mil"; "Carlos.F.Salazar@usace.army.mil"; "Mark.J.Phaneuf@usace.army.mil"; "Linda.Dreeland@usace.army.mil"
Cc:	Jercinovic, Devon; McKeage, Kevin; Morse, Earl; Ferrari, Peter; Bowman, Matthew; Rief, Lucas
Subject:	Activity Report for KAFB Well 106239 Conveyance Line Installation 19 October 2017
Date:	Thursday, October 19, 2017 7:56:47 PM
Attachments:	Daily Field Activities Summary Report.pdf Photos 10-19-17.pdf 011 CQM Daily Report 19OCT17.pdf

---

Issues Today Thursday 19 October 2017:

- None

Resolution of Issues:

- None

Work Performed Today:

- Completed HDD and conveyance line install under Kentucky St
- Trenched and installed conduit from Sta 3+00 to the electrical pad
- Concrete encased electrical conduits from the electrical pad to Sta 3+50
- Installed electrical pull box at Sta 3+00
- Backfilled and compacted from Sta 4+00 to Sta 4+65

Installation Completion to Date: 10%

Work Planned for 19 Oct 2017:

- Bacfilling and compaction

Please let me know if you need additional information.

Tyler Curley, P.E.
EA Engineering, Science, and Technology, Inc., PBC
320 Gold Avenue, SW Suite 1300
Albuquerque, NM 87120
(505) 715-4422 work
(719) 688-9558 cell
tcurley@eaest.com

DAILY FIELD ACTIVITIES SUMMARY REPORT		
PROJECT NAME: KAFB Well 106239 Conveyance Line Installation		
Date: 10-19-17	Time Shift Beginning: 0700	Time Shift Ending:1620
Project Number: 62599DM01		Contract/Task Order No.:
Client: USACE		Report By: Tyler Curley
Contractor(s): RMCI		Project Manager: Devon Jercinovic
Design Manager:		Oversight Manager: Tyler Curley
Design Engineer: George Nemeth		Site Engineer: Tyler Curley
Weather: Sunny 75° F		Logbook Number: NA
Personnel Onsite:	**Name:**	**Reason for Being Onsite:**
EA	Tyler Curley Earl Morse Pete Ferrari Kevin Mckeage	Construction/Safety Oversight Construction/Safety Oversight Field Assistance CQM
USACE	Amy Sanchez	Site Inspection/Oversight
RMCI	Ed Hyde Jerry Patton Phillip Johnson Felipe Hernandez Robert BeBault Jesus Moya Marcos Torres	General Contractor
Wilson Electric	Britt Crooks Jaime Perez	Electrical Contractor
Bixby Electric	Cameron Gutierrez Jasper Apachito	HDD (RMCI Sub)

Work Performed:

Planned Activities:

- Continue HDD
- Continue trenching
- Install conveyance piping and electrical conduits
- Cap electrical conduits with concrete
- Weld Conveyance pipe
- Begin backfilling and compaction

Completed Activities:

- Completed HDD and conveyance line install under Kentucky St
- Trenched and installed conduit from Sta 3+00 to the electrical pad
- Concrete encased electrical conduits from the electrical pad to Sta 3+50
- Installed electrical pull box at Sta 3+00
- Backfilled and compacted from Sta 4+00 to Sta 4+65

Material Deliveries:

- PVC electrical conduit

Construction Quality Control Activities or Samples Collected:

- None

Observations or Possible Variations from Specifications: • The conveyance line and electrical conduits were installed in a single boring instead of separate borings

Anticipated Activities for the Following Day:	
• Backfilling and compaction **Planned Material Deliveries:** • None	
Contractor Reports, Manifests, Documents Reviewed and Logged:	
None	
Report Completed By:	
Tyler Curley	Date: 19 October 2017

KOMATSU
RMCI
PC200LC

DAILY REPORT

(ATTACH ADDITIONAL SHEETS IF NECESSARY)

CONTRACT NAME:	Kirtland AFB Bulk Fuels Facility Expansion of Dissolved Plume GWTS Design	REPORT NO:	011
CONTRACT NUMBER:	W912DR-12-D-0006	REPORT DATE:	19 OCT 17
REVISION NUMBER:	-	REVISION DATE:	-
TASK ORDER NUMBER:	DM01	PROJECT NAME / LOCATION:	Kirtland BFF
PROJECT NUMBER:	62599DM01	PROJECT DESCRIPTION:	Installation of KAFB-106239 Conveyance Line
PROJECT MANAGER:	Devon Jercinovic	FIELD QUALITY MANAGER:	Kevin McKeage
CONSTRUCTION MANAGER:	Tyler Curley	SITE SAFETY MANAGER:	Earl Morse

AM WEATHER:	Partly Cloudy Cool	PM WEATHER:	Partly Cloudy Warm	MAX TEMP (F):	73		

SUMMARY OF WORK PERFORMED TODAY

CQM Inspection of Teflon Gaskets and Stainless Steel Bolts

HEALTH AND SAFETY REPORT

SAFETY ACTIONS TAKEN TODAY/SAFETY INSPECTIONS CONDUCTED (Include Observations, Safety Violations, Corrective Instructions Given, Corrective Actions Taken, and Results of Safety Inspections Conducted:

See Construction Manager's Daily Report

TAILGATE TOPICS:

"

SAFE BEHAVIOR OBSERVATIONS/SELF-ASSESSMENTS:

"

OPERATIONS/PRODUCTION REPORT

WORK FORCE – CONTRACTOR AND SUBCONTRACTOR

Company	Cumulative Total of Work Hours From Previous Report	Total Hours Today	Total Work Hours From Start of Injection Event
See CM's Daily Report			

EQUIPMENT ON HAND

Description of Equipment	Make/Model/ Manufacturer	Equipment ID Number	Inspection Performed By
Water Truck	Colorado Kenworth	4610	Robert Bebault
Loader	Volvo L-120	2310	Jesus Moya
Excavator	Komatsu PC-200	1107	Jesus Moya
HDPE Welder	McElroy Tracstar	8617	Jerry Patton
HDPE Welder	McElroy Tracstar	8618	Not in Use
Backhoe	John Deere 310SJ	1415	Jesus Moya

COMMENTS (acceptance status, inspection findings, etc.):

OK

WORK AND/OR TESTS ACCOMPLISHED OR IN PROGRESS

Performed Work/Test for Today: See Construction Manager's Daily Report.

Planned Work/Test for Tomorrow: "

Planned Work/Test for Next Week: "

CHANGED CONDITIONS/DELAY/CONFLICTS ENCOUNTERED (List any conflicts with the project [i.e., scope of work and/or drawings], delays to the project attributable to site and weather conditions, etc. "

VISITORS AND DISCUSSIONS: "

QUALITY CONTROL REPORT

MATERIALS DELIVERED TO JOB SITE

Quantity/Volume/ Weight	Description of Materials Received	Make/Model/ Manufacturer	Material Lot Number	Inspection Performed By
~~5~~ KM 5	Teflon Gaskets (4")	–	–	KM
5	Stainless Steel Bolt sets (4")	304 SS	–	KM

COMMENTS (acceptance status, inspection findings, etc.): Materials Accepted

INSPECTIONS PERFORMED

Task/Activity Inspected	Inspection Performed	Findings
None		

TESTS PERFORMED

Task/Activity Tested	Test Performed	Test Results (Pass/Fail) - Criteria
None		

QUALITY ISSUES AND RESOLUTIONS: None

SUBMITTALS INSPECTION / REVIEW

Submittal No.	Submittal Description	Specification/Plan Reference	Submittal Approved?		Comment/Reason/Action
NA	Daily Report	–	Yes ☐	No ☐	Pending
NA	SBO	–	Yes ☐	No ☐	Pending
NA	PTSP	–	Yes ☐	No ☐	Pending

REGULATORY COMPLIANCE REPORT							
PERMIT INSPECTIONS PERFORMED: None							
WASTE ACCUMULATION/STOCKPILE AREA INSPECTION							
Inspection Performed By:	NA			Signature of Inspector:			
Accumulation / Stockpile Area Inspected:							
No of Bins:		No of Tankers		No of Roll-Off Boxes:		No. of Tanks	
Inspection Results: NA							
GENERAL COMMENTS							
General Comments: (rework, directives, etc.): Materials accepted.							
ATTACHMENTS							
List of Attachments: (examples, as applicable: submittals, meeting minutes, safety meeting minutes, COCs, weight tickets, manifests, profiles, rework item list, RFIs, DCNs, photographs, etc.): Photo log and Material ticket.							
NOTE: Write all entries legibly in ink. Line out all unused portions or designate as "not applicable". Preparer signs first and last name on each completed daily report. This form may be filled out electronically and signed electronically.				PREPARER'S SIGNATURE		19 OCT 17 DATE	

Location: Field Trailer
Description: Teflon Gaskets
Date: 19 October 2017 Direction: Down

Location: Field Trailer
Description: Stainless Steel Bolts
Date: 19 October 2017 Direction: Down

SOLD BY
ALBUQUERQUE-E NM
Branch - 117
8135 Second Street NW
Albuquerque NM 87107 0000

PHONE # 505 344 0223

CORE & MAIN
Local Knowledge
Local Experience
Local Service, Nationwide®

FILLED BY: AB
CHECKED BY:
REVIEWED BY: CM 10/13/17
ENTERED BY: STEPHANIE ARANDA - 117

REPRINT 10/13/2017 11:41 AM PAGE 1
108481

PICK TICKET H918032

SOLD TO
RMCI, INC.
STOCK-ALBUQUERQUE
ACCOUNTS PAYABLE
PO BOX 91447
ALBUQUERQUE NM 87199-1447
Cus Ph# 505 345 0008

SHIP TO
RMCI, INC.
KIRTLAND AFB
ALBUQUERQUE NM
87106

SPECIAL INSTRUCTIONS/COMMENTS:
BID # 380502 C/O # H742882
BID NM: KAFB GROUNDWATER
C/O # H742882

BRANCH NO.	DATE ORDERED	DATE SHIPPED	PURCHASE ORDER NO.	JOB NAME	JOB NUMBER	DELIVERY METHOD: OUR TRUCK	CUSTOMER PICK UP	DIRECT	SHIPPED	BILL OF LADING NO.	SHIPPED VIA	SALESMAN
117	10/05/17	10/13/17	SEE BELOW	KAFB GROUNDWATR	18011	X					CORE & MAIN LP	003

BIN LOCATION	PRODUCT CODE	DESCRIPTION	QTY ORDERED	QTY SHIPPED	BACK ORDERED	UNIT PRICE	PER	AMOUNT
	CUSTOMER PO# -	KAFB GROUNDWATER						
	/21015088252	4" 150# BOLT SET GR. B-8 304SS	5	5			EA	
	/21015088253	4" FF TEFLON 1/8"	5	5			EA	
		TOTAL WEIGHT: .00						

END OF ORDER

MERCHANDISE SUBTOTAL	TAX	TAX AMOUNT	FREIGHT	DELIVERY	HANDLING	RESTOCKING	MISCELLANEOUS	TOTAL SALE
			7.05					

This transaction is governed by and subject to Core & Main's standard terms and conditions, which are incorporated by reference and accepted. To review these terms and conditions, please visit: www.waterworks.hdsupply.com/TandC.

RECEIVED BY SIGNATURE:
PRINT NAME HERE: Trista Murray

EA Engineering, Science, and Technology, Inc

Employee/Visitor Register and Safety Brief				
Date:				
Site Entry/Exit		Name (Printed)	Signature	Company
Time In	Time Out			
6:55	1530	Jasper Apachito	Jasper Apachito	Bixby
700	1670	Tyler Cirley		EA
0700	1630	Earl Morse		EA
7:00	1530	Manuel Deleon	Manuel Deleon	Bixby
7:00	1620	Jesus Moya	Jesus Moya	RMCI
7:00	1620	Jerry Patton	Jerry Patton	RMCI
7:	1620	Marcos Torres		RMCI
7:00	1620	Felipe Hernandez	Felipe Hernandez	RMCI
7:00	1620	Robert BeBault	Robert BeBault	RMCI
7:00	1545	Jaime Ivan Price		Wilson Electric
700	1545	Britt Crooks	BC	Wilson
7:00	1600	[illegible]		RMCI
8:40	0900	Kevin McKuze		EA
11:15	1145	Pete Ferrari	Pete Ferrari	EA
1:20	1450	Phillip Johnson		RMCI
1:45	1515	Amy Sanchez	Amy Sanchez	USACE

ENVIRONMENTAL MONITORING RECORD

SITE: KAFB-106239 Conveyance Line Installation

PROJECT NO.: 62599DM01

INSTRUMENT: Noise Pro Series / Therm Electron Corp.

Time	Monitoring Location	Reading	Corrective Action Taken[a]
1110	Calibration Noise monitor dBA/Dust Monitor	113.9 dBA/0.000 mg/m³	
1115	sta 5 + 00	65.0 / 0.017	
1118	sta 6 + 00	65.4 / 0.027	

Comments: N = North, E = East, S = South, W = West

(a) Corrective actions taken must be documented whenever readings at or above action levels are reached. Monitoring equipment and action levels are specified in Section 9.33 of the Accident Prevention Plan.

Recorded By: _____ Date: _____

Site Health & Safety Officer

EA ENGINEERING, SCIENCE AND TECHNOLOGY, INC.
SAFETY MEETING REPORT

Date: 10-19-17	**Time:** 0700	**Duration of meeting:** 10 min	**Project #** G3599 DM01
Location: ~~Ridgecrest~~ KAFB Well 100839		**Task:** Conveyance Line Install	

Type of meeting: ____ Daily ____ Weekly ____ Monthly ____ Other:_____

Items/Issues discussed:

1. Maintain focus
2. Moving equipment
3. Pinch points
4. No jumping the ditch
5.

Attach minutes of safety meeting if taken.

Safety questions/issues raised:	Actions/Follow-up needed:
1. None	
2.	
3.	
4.	
5.	
6.	

Remarks:

None

Meeting conducted by:

Tyler Curley

EA Engineering, Science, and Technology, Inc.

DAILY SAFETY INSPECTION CHECKLIST
(TO BE COMPLETED EACH DAY OF CONSTRUCTION OR HTRW SITE ACTIVITIES)

Site: KAFB well 106939
Location: Ridgecrest Dr
Project No.: 62599DM01
Client: USACE

Prepared by SSHO: Tyler Curley
Project Manager: Devon Jercinovic
Date : 10-19-17

Rating	Y	N	N/A	Comments/Immediate Corrective Action[1]
Accident Prevention Plan (APP) and Site Safety and Health Plan (SSHP) General Requirements				
Are there new onsite personnel? • Did they receive pre-entry briefing and are their names recorded in field logbook or daily log? • Was the USACE PM made aware of the new personnel. • Required training and medical surveillance documentation received (e.g., 40-hr, 8 hr, etc.)?		✓		
Did personnel sign in/out of site?	✓			
Daily tailgate safety meetings conducted and documented?	✓			
Were new activities performed today? Were hazards identified, discussed during the daily safety tailgate, and incorporated into revised APP/SSHP?		✓		
New materials brought on site? MSDSs available?		✓		
Exclusion (EZ), Contamination Reduction (CRZ), and Support Zones (SZ) delineated and enforced?	✓			
General housekeeping measures in place to prevent hazards?	✓			
Emergency Planning				
Were there any changes to emergency contact names, telephone numbers, or hospital? If so, were site personnel made aware and was information distributed/reposted.	✓			
Adequate safety equipment inventory available?	✓			
Fire extinguisher available (monthly inspection of extinguisher will suffice)	✓			
Eyewash station(s) functioning and in place (weekly inspection of eye wash station will suffice)?	✓			
First aid supplies available (weekly inspection of first aid kit will suffice)?	✓			
Communication equipment readily available for emergencies?	✓			
Any reported accidents/incidents at this site? If so, were accident reporting procedures followed?		✓		
Air Monitoring				
Monitoring equipment specified in SSHP available and in working order? Air monitoring instrumentation for this site includes – check each if required/on site, note deficiencies in comments: • Combustible gas meter • Organic vapor analyzer • Contaminant specific analyzer for benzene (if total organic vapor concentrations exceed 0.5 ppm)	✓			
Monitoring equipment calibrated and calibration records	✓			

Y = Satisfactory or Yes; N = Unsatisfactory or No, N/A = Not applicable

Rating	Y	N	N/A	Comments/Immediate Corrective Action[1]
available?				
Environmental and personnel monitoring performed as specified in SSHP?	✓			
PPE				
Proper dermal protection worn by EA and subcontracted employees when handling/ contacting hazardous chemicals or contaminated environmental media?	✓			
Required PPE (hard hats, safety boots / shoes, eye protection with side shields, hearing protection) being worn by EA and subcontracted employees?	✓			
PPE inspection completed by SSHO?	✓			
Drill Rig Operations				
Daily rig inspection completed? Any equipment problems?	✓			
Drill rigs/elevated equipment maintaining minimum 10-ft distance from energized (50 kV) overhead power lines?	✓			
Investigation-derived Waste (IDW)				
Wastes properly staged, secured, and labeled at end of day?			✓	

Additional Comments:

Site Safety and Health Officer's Signature

10-19-17

Date

[1]If a deficiency is noted that cannot be immediately corrected, the SSHO will monitor the progress in correcting the deficiency and will document following:

- Date the deficiency was identified
- Description of the deficiency
- Name of the person responsible for correcting the deficiency
- Projected date of correction
- Actual date of correction.

HEALTH AND SAFETY ACTIVITY REPORT

Site: KAFB Well 106239 Location: Ridgecrest Dr

Weather Cond.: _____ Onsite Hours: From 0700 To 1600

Changes in PPE Levels[1]	Work Operations	Reasons for Change
None		

Site Safety and Health Plan Violations	Corrective Action Specified	Corrective Action Taken [2](yes/no)
None		

Observations and Comments:

None

Completed by: Tyler Curley Date: 10-19-17
Site Health and Safety Supervisor

[1]Only SSHO may change PPE levels, using only criteria specified in APP/SSHP.
[2]If a deficiency is noted that cannot be immediately corrected, the SSHO will monitor the progress in correcting the deficiency and will document following:

- Date the deficiency was identified
- Description of the deficiency
- Name of the person responsible for correcting the deficiency
- Projected date of correction
- Actual date of correction.

From:	Curley, Tyler
To:	"Trent.Simpler@usace.army.mil"; "Amy.E.Sanchez@usace.army.mil"; "Carlos.F.Salazar@usace.army.mil"; "Mark.J.Phaneuf@usace.army.mil"; "Linda.Dreeland@usace.army.mil"
Cc:	Jercinovic, Devon; McKeage, Kevin; Morse, Earl; Bowman, Matthew; Rief, Lucas; Ferrari, Peter
Subject:	Activity Report for KAFB Well 106239 Conveyance Line Installation 20 October 2017
Date:	Friday, October 20, 2017 2:12:30 PM
Attachments:	Daily Field Activities Summary Report.pdf Photos 10-20-17.pdf

---

Issues Today Friday 20 October 2017:

- None

Resolution of Issues:

- None

Work Performed Today:

- Backfilled and compacted from Sta 3+50 to Sta 4+00
- Secured site for the weekend

Installation Completion to Date: 10%

Work Planned for 23 Oct 2017:

- Continue HDD
- Weld HDPE conveyance pipe and conduits for HDD under Louisiana
- Backfill and compaction of electrical trench

Please let me know if you need additional information.

Tyler Curley, P.E.
EA Engineering, Science, and Technology, Inc., PBC
320 Gold Avenue, SW Suite 1300
Albuquerque, NM 87120
(505) 715-4422 work
(719) 688-9558 cell
tcurley@eaest.com

DAILY FIELD ACTIVITIES SUMMARY REPORT		
PROJECT NAME: KAFB Well 106239 Conveyance Line Installation		
Date: 10-20-17	Time Shift Beginning: 0700	Time Shift Ending:1200
Project Number: 62599DM01		Contract/Task Order No.:
Client: USACE		Report By: Tyler Curley
Contractor(s): RMCI		Project Manager: Devon Jercinovic
Design Manager:		Oversight Manager: Tyler Curley
Design Engineer: George Nemeth		Site Engineer: Tyler Curley
Weather: Sunny 75° F		Logbook Number: NA
Personnel Onsite:	**Name:**	**Reason for Being Onsite:**
EA	Tyler Curley Earl Morse Pete Ferrari Kevin Mckeage	Construction/Safety Oversight Construction/Safety Oversight Field Assistance CQM
RMCI	Jerry Patton Felipe Hernandez Robert BeBault Jesus Moya Marcos Torres	General Contractor
Wilson Electric	Britt Crooks Jaime Perez	Electrical Contractor

Work Performed:

Planned Activities:

- Begin backfilling and compaction

Completed Activities:

- Backfilled and compacted from Sta 3+50 to Sta 4+00
- Secured site for the weekend

Material Deliveries:

- None

Construction Quality Control Activities or Samples Collected:

- None

Observations or Possible Variations from Specifications:

- None

Anticipated Activities for the Following Day:

- Continue HDD
- Weld HDPE pipe for conveyance line and conduits
- Continue backfilling and compaction

Planned Material Deliveries:

- None

Contractor Reports, Manifests, Documents Reviewed and Logged:	
None	
Report Completed By:	
Tyler Curley	Date: 20 October 2017

CAUTION ELECTRIC LINE BELOW
WATER SUPPLY PIPE LINE

KOMATSU

EA Engineering, Science, and Technology, Inc

Employee/Visitor Register and Safety Brief

Date: 10-20-17

Site Entry/Exit		Name (Printed)	Signature	Company
Time In	Time Out			
0700	1700	Tyler Curley		EA
700	1200	Britt Crooks		Wilson
7:00	1200	Felipe Hernandez	Felipe Hernandez	RMCI
7:00	1200	Jesus Moya		RMCI
700	1200	Jaime Figueroa Ruiz		Wilson
7:00	1200	Marcos Torres		RMCI
7:00	1200	Robert Bebault		RMCI
7:00	1200	Jerry Patton		RmcI
8:15	0845	Kent McKenzie		EA
0940	1030	Robert Hargis		RMCI
1010	1100	Earl Morse		EA
10 10	1100	Pete Ferrari		EA

EA ENGINEERING, SCIENCE AND TECHNOLOGY, INC.
SAFETY MEETING REPORT

Date: 10-30-17	**Time:** 0700	**Duration of meeting:** 10 min	**Project #** 69AM01
Location: KAFB Well 106239		**Task:** Conveyance Line Install	

Type of meeting: _X_ Daily ____Weekly ____ Monthly ____ Other:_____

Items/Issues discussed:

1. Crush points
2. traffic
3. Working in the trench
4.
5.

Attach minutes of safety meeting if taken.

Safety questions/issues raised:	Actions/Follow-up needed:
1. None	
2.	
3.	
4.	
5.	
6.	

Remarks: None

Meeting conducted by:
Tyler Curley

EA Engineering, Science, and Technology, Inc.

DAILY SAFETY INSPECTION CHECKLIST (TO BE COMPLETED EACH DAY OF CONSTRUCTION OR HTRW SITE ACTIVITIES)

Site: KAFB Well 106239
Location: Ridge crest Dr
Project No.: G3599 0101
Client: USACE

Prepared by SSHO: Tyler Curley
Project Manager: Devon Jerominovic
Date: 10-20-17

Rating	Y	N	N/A	Comments/Immediate Corrective Action[1]
Accident Prevention Plan (APP) and Site Safety and Health Plan (SSHP) General Requirements				
Are there new onsite personnel? • Did they receive pre-entry briefing and are their names recorded in field logbook or daily log? • Was the USACE PM made aware of the new personnel. • Required training and medical surveillance documentation received (e.g., 40-hr, 8 hr, etc.)?		✓		
Did personnel sign in/out of site?	✓			
Daily tailgate safety meetings conducted and documented?	✓			
Were new activities performed today? Were hazards identified, discussed during the daily safety tailgate, and incorporated into revised APP/SSHP?		✓		
New materials brought on site? MSDSs available?		✓		
Exclusion (EZ), Contamination Reduction (CRZ), and Support Zones (SZ) delineated and enforced?	✓			
General housekeeping measures in place to prevent hazards?	✓			
Emergency Planning				
Were there any changes to emergency contact names, telephone numbers, or hospital? If so, were site personnel made aware and was information distributed/reposted.		✓		
Adequate safety equipment inventory available?	✓			
Fire extinguisher available (monthly inspection of extinguisher will suffice)	✓			
Eyewash station(s) functioning and in place (weekly inspection of eye wash station will suffice)?	✓			
First aid supplies available (weekly inspection of first aid kit will suffice)?	✓			
Communication equipment readily available for emergencies?	✓			
Any reported accidents/incidents at this site? If so, were accident reporting procedures followed?				
Air Monitoring				
Monitoring equipment specified in SSHP available and in working order? Air monitoring instrumentation for this site includes – check each if required/on site, note deficiencies in comments: • Combustible gas meter • Organic vapor analyzer • Contaminant specific analyzer for benzene (if total organic vapor concentrations exceed 0.5 ppm)	✓			
Monitoring equipment calibrated and calibration records				

Y = Satisfactory or Yes; N = Unsatisfactory or No, N/A = Not applicable

Rating	Y	N	N/A	Comments/Immediate Corrective Action[1]
available?	✓			
Environmental and personnel monitoring performed as specified in SSHP?	✓			
PPE				
Proper dermal protection worn by EA and subcontracted employees when handling/ contacting hazardous chemicals or contaminated environmental media?	✓			
Required PPE (hard hats, safety boots / shoes, eye protection with side shields, hearing protection) being worn by EA and subcontracted employees?	✓			
PPE inspection completed by SSHO?	✓			
Drill Rig Operations				
Daily rig inspection completed? Any equipment problems?	✓			
Drill rigs/elevated equipment maintaining minimum 10-ft distance from energized (50 kV) overhead power lines?	✓			
Investigation-derived Waste (IDW)				
Wastes properly staged, secured, and labeled at end of day?			✓	

Additional Comments:

Site Safety and Health Officer's Signature

10-20-17

Date

[1]If a deficiency is noted that cannot be immediately corrected, the SSHO will monitor the progress in correcting the deficiency and will document following:

- Date the deficiency was identified
- Description of the deficiency
- Name of the person responsible for correcting the deficiency
- Projected date of correction
- Actual date of correction.

HEALTH AND SAFETY ACTIVITY REPORT

Site: KAFB Well 100239 Location: Ridgecrest Dr

Weather Cond.: Sunny 70° Onsite Hours: From 0700 To _____

Changes in PPE Levels[1]	Work Operations	Reasons for Change

Site Safety and Health Plan Violations	Corrective Action Specified	Corrective Action Taken [2](yes/no)

Observations and Comments:

Completed by: _____ Date:
Site Health and Safety Supervisor

[1]Only SSHO may change PPE levels, using only criteria specified in APP/SSHP.
[2]If a deficiency is noted that cannot be immediately corrected, the SSHO will monitor the progress in correcting the deficiency and will document following:

- Date the deficiency was identified
- Description of the deficiency
- Name of the person responsible for correcting the deficiency
- Projected date of correction
- Actual date of correction.

From:	Morse, Earl
To:	Simpler, Trent SPA; Amy Sanchez; Phaneuf, Mark J SPA (Mark.J.Phaneuf@usace.army.mil); Carlos Salazar; Linda Dreeland
Cc:	Jercinovic, Devon; Curley, Tyler; McKeage, Kevin; Ferrari, Peter; Bowman, Matthew; Rief, Lucas
Subject:	Activity Report for KAFB Well 106239 Conveyance Line Installation 23 October 2017
Date:	Monday, October 23, 2017 6:40:26 PM
Attachments:	Daily Field Activities Summary Report 10-23-17.pdf 012 CQM Daily Report 23OCT17.pdf Pictures 10-23-17.pdf

---

Issues Today Monday 23 October 2017:

- An unmarked, abandoned 1" PVC pipe was cut at a depth of @1' below grade near Sta 2+00 during trenching for the HDPE pipe. Pipe was running in N-S direction and empty. RMCI and USACE thought it may be an abandoned irrigation line.
- The Bixby boring rig broke a hydraulic line during boring activity in the COA ROW just west of Louisiana Blvd. Approximately 1 gallon of hydraulic fluid was released to soil and into the mud pit.

Resolution of Issues:

- 1" Abandoned Line: Work was allowed to continue.
- Hydraulic Spill: Bixby repaired the leak and cleaned up and removed all impacted soil and mud (@1/8 yd). EA notified USACE and USACE notified Kirtland AFB. EA will collect confirmation samples for laboratory analysis upon receipt of bottles from the laboratory. KAFB has requested a corrective action report to be completed upon receipt of laboratory analyses.

Work Performed Today:

- Backfilled and compacted electrical trench between first electrical box and concrete pad
- Welded 200' of 8" HDPE pipe
- Excavated 4' deep trench for HDPE and laid 8" HDPE pipe from approximately Sta 1+20 to Sta 3+20
- Backfilled and compact first lift above 8" HDPE pipe, laid out warning tape
- Build and laid out 4" and 2" electrical conduit from Sta 6+00 to Sta 10+80
- Bored and pulled 8", 4" and 2" pipe between Kentucky St. and Louisiana Blvd

Installation Completion to Date: 11%

Work Planned for 24 Oct 2017:

- HDD boring under Louisiana Blvd into Kirtland AFB
- Continue HDD prep
- Finish backfill and compaction of HDPE trench

Please let me know if you need additional information.

Earl L. Morse, MS, PG
EA Engineering, Science, and Technology, Inc., PBC
Project Manager/Senior Geologist
320 Gold Ave. SW, Suite 1300
Albuquerque, NM 87102

Cell: 505.238-4410
Office: 505.715.4275
Email: emorse@eaest.com
www.eaest.com

DAILY FIELD ACTIVITIES SUMMARY REPORT		
PROJECT NAME: KAFB Well 106239 Conveyance Line Installation		
Date: 10-23-17	Time Shift Beginning: 0645	Time Shift Ending:1700
Project Number: 62599DM01		Contract/Task Order No.:
Client: USACE		Report By: Earl Morse
Contractor(s): RMCI		Project Manager: Devon Jercinovic
Design Manager:		Oversight Manager: Earl Morse
Design Engineer: George Nemeth		Site Engineer: Kevin McKeage
Weather: Clear/warm 75° F		Logbook Number: NA
Personnel Onsite:	**Name:**	**Reason for Being Onsite:**
EA	Earl Morse Pete Ferrari	Construction and Safety Oversight SSHO-Borings
Wilson Electric	Jamie Perez Britt Crooks	Electrical conduit install
RMCI	Jerry Patton Robert BeBault Felipe Hernandez Marcos Torres Jesus Moya George Ingram	General Contractor
Bixby Electric	Manuel De Leon Jasper Apachito	Boring Contractor

Work Performed:

Planned Activities:

- Backfill and compact electrical trench
- Excavate 4’ deep trench for HDPE and lay pipe from Sta 1+20 to Sta 3+20
- Weld HDPE
- Build and layout 4” and 2” electrical conduit east of VA entrance
- Bore and pull pipe between Kentucky St. and Louisiana Blvd.

Completed Activities:

- Backfilled and compacted electrical trench between first electrical box and concrete pad
- Welded 200’ of 8” HDPE pipe
- Excavated 4’ deep trench for HDPE and laid 8” HDPE pipe from approximately Sta 1+20 to Sta 3+20
- Backfilled and compact first lift above 8” HDPE pipe, laid out warning tape
- Build and laid out 4” and 2” electrical conduit from Sta 6+00 to Sta 10+80
- Bored and pulled 8”, 4” and 2” pipe between Kentucky St. and Louisiana Blvd.

Material Deliveries:

- Electrical Components from Wilson Electric

Construction Quality Control Activities or Samples Collected:

- Inspection of all newly received electrical components. See CQM report.

Observations or Possible Variations from Specifications:
• None

Anticipated Activities for the Following Day:	
• HDD boring under Louisiana Blvd • Continue HDD prep • Finish backfill and compaction of HDPE trench **Planned Material Deliveries:** • None	
Contractor Reports, Manifests, Documents Reviewed and Logged:	
None	
Report Completed By:	
Earl Morse	Date: 23 October 2017

DAILY REPORT

(ATTACH ADDITIONAL SHEETS IF NECESSARY)

CONTRACT NAME:	Kirtland AFB Bulk Fuels Facility Expansion of Dissolved Plume GWTS Design	REPORT NO:	012
CONTRACT NUMBER:	W912DR-12-D-0006	REPORT DATE:	23OCT17
REVISION NUMBER:	-	REVISION DATE:	-
TASK ORDER NUMBER:	DM01	PROJECT NAME / LOCATION:	Kirtland BFF
PROJECT NUMBER:	62599DM01	PROJECT DESCRIPTION:	Installation of KAFB-106239 Conveyance Line
PROJECT MANAGER:	Devon Jercinovic	FIELD QUALITY MANAGER:	Kevin McKeage
CONSTRUCTION MANAGER:	Earl Morse	SITE SAFETY MANAGER:	Peter Ferrari

AM WEATHER:	clear Cool	PM WEATHER:	Clear Warm	MAX TEMP (F):	78		

SUMMARY OF WORK PERFORMED TODAY

CQM Inspection of electrical components.

HEALTH AND SAFETY REPORT

SAFETY ACTIONS TAKEN TODAY/SAFETY INSPECTIONS CONDUCTED (Include Observations, Safety Violations, Corrective Instructions Given, Corrective Actions Taken, and Results of Safety Inspections Conducted:

See Construction Manager's Daily Report

TAILGATE TOPICS:

"

SAFE BEHAVIOR OBSERVATIONS/SELF-ASSESSMENTS:

"

OPERATIONS/PRODUCTION REPORT

WORK FORCE – CONTRACTOR AND SUBCONTRACTOR

Company	Cumulative Total of Work Hours From Previous Report	Total Hours Today	Total Work Hours From Start of Injection Event
See CM's Daily Report			

EQUIPMENT ON HAND

Description of Equipment	Make/Model/ Manufacturer	Equipment ID Number	Inspection Performed By
Water truck	Colorado Kenworth	4610	Robert Beckwith
Loader	Volvo L-120	2310	Jesus Moya
Excavator	Komatsu PC-200	1107	Jesus Moya
HDPE Welder	McElroy Tracstar	8617	Jerry Patton
HDPE Welder	McElroy Tracstar	8618	Not in use
Backhoe	John Deere 310 SJ	1415	Jesus Moya

COMMENTS (acceptance status, inspection findings, etc.):

OK

WORK AND/OR TESTS ACCOMPLISHED OR IN PROGRESS

Performed Work/Test for Today: See CM's Daily Report

Planned Work/Test for Tomorrow: "

Planned Work/Test for Next Week: "

CHANGED CONDITIONS/DELAY/CONFLICTS ENCOUNTERED (List any conflicts with the project [i.e., scope of work and/or drawings], delays to the project attributable to site and weather conditions, etc. "

VISITORS AND DISCUSSIONS: "

QUALITY CONTROL REPORT

MATERIALS DELIVERED TO JOB SITE

Quantity/Volume/ Weight	Description of Materials Received	Make/Model/ Manufacturer	Material Lot Number	Inspection Performed By
1	Safety Switch	Siemens	–	KM
1	Mini Load Center	Siemens	–	KM
1	Surge Protector	Siemens	–	KM
1	Junction Box	Eaton	–	KM

COMMENTS (acceptance status, inspection findings, etc.): All materials accepted and meet submittals

INSPECTIONS PERFORMED

Task/Activity Inspected	Inspection Performed	Findings
None		

TESTS PERFORMED

Task/Activity Tested	Test Performed	Test Results (Pass/Fail) - Criteria
None		

QUALITY ISSUES AND RESOLUTIONS: None

SUBMITTALS INSPECTION / REVIEW

Submittal No.	Submittal Description	Specification/Plan Reference	Submittal Approved?		Comment/Reason/Action
NA	Daily Report	–	Yes ☐	No ☐	Pending
NA	SBO	–	Yes ☐	No ☐	Pending
NA	PTSP	–	Yes ☐	No ☐	Pending

REGULATORY COMPLIANCE REPORT							
PERMIT INSPECTIONS PERFORMED: None							
WASTE ACCUMULATION/STOCKPILE AREA INSPECTION							
Inspection Performed By:	NA			Signature of Inspector:			
Accumulation / Stockpile Area Inspected:							
No of Bins:		No of Tankers		No of Roll-Off Boxes:		No. of Tanks	
Inspection Results: NA							
GENERAL COMMENTS							
General Comments: (rework, directives, etc.): Materials Accepted							
ATTACHMENTS							
List of Attachments: (examples, as applicable: submittals, meeting minutes, safety meeting minutes, COCs, weight tickets, manifests, profiles, rework item list, RFIs, DCNs, photographs, etc.): Photo log							
NOTE: Write all entries legibly in ink. Line out all unused portions or designate as "not applicable". Preparer signs first and last name on each completed daily report. This form may be filled out electronically and signed electronically.				PREPARER'S SIGNATURE		23 OCT 17 DATE	

Location: Wilson Electric Laydown Yard
Description: Safety Switch
Date: 23 October 2017 Direction: Down

Location: Wilson Electric Laydown Yard
Description: Surge Protector
Date: 23 October 2017 Direction: Down

Location: Wilson Electric Laydown Yard
Description: Mini Load Center
Date: 23 October 2017 Direction: Down

Location: Wilson Electric Laydown Yard
Description: Junction Box
Date: 23 October 2017 Direction: Down

EA Engineering, Science, and Technology, Inc

106239 Conveyance Line

Employee/Visitor Register and Safety Brief

Date: 10/23/2017

Site Entry/Exit		Name (Printed)	Signature	Company
Time In	Time Out			
7:00	1700	Marcos Torres		RMCI
7:00	1700	Jerry Patton	Jerry Patton	RMCI
7:00	1700	Jesus Moya	Jesus Moya	RMCI
7:00	1700	Felipe Hernandez	Felipe H	RMCI
7:00	1700	Robert BeBault	Robert BeBault	RMCI
7:00	1700	George Ingram		RMCI
7:00	1730	Pete Ferraro	Pete Ferraro	EA
0700	1700	Earl Morse	Earl Morse	EA
7:00	1500	Jaime Francisco Perez		Wilson Electric
7:00	~~1730~~	Manuel De Leon	Manuel De Leon	Bixby
7:00	~~1730~~	Jasper Apachito	Jasper Apachito	Bixby
7:00	1500	Britt Crooks	BC	Wilson
7:00	1420	Ed Hyde		RMCI
	1330	T Simpler		USACE
	1410	A Sanchez	Amy Sanchez	USACE

EA ENGINEERING, SCIENCE AND TECHNOLOGY, INC.
SAFETY MEETING REPORT

Date: 10-23-2017	**Time:** 0700	**Duration of meeting:** 10	**Project #** 62599.01.01
Location: 106239 Conveyance Line		**Task:** Boring, backfilling	

Type of meeting: [X] **Daily** [ ] **Weekly** [ ] **Monthly** [ ] **Other:** _____

Items/Issues discussed:

1. Excavation Safety / Trenching
2. Overhead Power
3. Slips, trips and falls
4.
5.

Attach minutes of safety meeting if taken.

Safety questions/issues raised:	Actions/Follow-up needed:
1. None	
2.	
3.	
4.	
5.	
6.	

Remarks: None

Meeting conducted by:
Earl Morse

EA Engineering, Science, and Technology, Inc.

DAILY SAFETY INSPECTION CHECKLIST (TO BE COMPLETED EACH DAY OF CONSTRUCTION OR HTRW SITE ACTIVITIES)

Site: 106239 Conveyance Line
Location: ABQ, NM
Project No.: 62599 DM01.1009
Client: USACE

Prepared by SSHO: Earl Morse
Project Manager: Devon Jerkovic
Date: 10-23-17

Rating	Y	N	N/A	Comments/Immediate Corrective Action[1]
Accident Prevention Plan (APP) and Site Safety and Health Plan (SSHP) General Requirements				
Are there new onsite personnel? • Did they receive pre-entry briefing and are their names recorded in field logbook or daily log? • Was the USACE PM made aware of the new personnel. • Required training and medical surveillance documentation received (e.g., 40-hr, 8 hr, etc.)?		✓		
Did personnel sign in/out of site?	✓			
Daily tailgate safety meetings conducted and documented?	✓			
Were new activities performed today? Were hazards identified, discussed during the daily safety tailgate, and incorporated into revised APP/SSHP?		✓		
New materials brought on site? MSDSs available?		✓		
Exclusion (EZ), Contamination Reduction (CRZ), and Support Zones (SZ) delineated and enforced?			✓	
General housekeeping measures in place to prevent hazards?	✓			
Emergency Planning				
Were there any changes to emergency contact names, telephone numbers, or hospital? If so, were site personnel made aware and was information distributed/reposted.		✓		
Adequate safety equipment inventory available?	✓			
Fire extinguisher available (monthly inspection of extinguisher will suffice)	✓			
Eyewash station(s) functioning and in place (weekly inspection of eye wash station will suffice)?	✓			
First aid supplies available (weekly inspection of first aid kit will suffice)?	✓			
Communication equipment readily available for emergencies?	✓			
Any reported accidents/incidents at this site? If so, were accident reporting procedures followed?		✓		
Air Monitoring				
Monitoring equipment specified in SSHP available and in working order? Air monitoring instrumentation for this site includes – check each if required/on site, note deficiencies in comments: • Combustible gas meter • Organic vapor analyzer • Contaminant specific analyzer for benzene (if total organic vapor concentrations exceed 0.5 ppm)			✓	
Monitoring equipment calibrated and calibration records			✓	

Y = Satisfactory or Yes; N = Unsatisfactory or No, N/A = Not applicable

Rating	Y	N	N/A	Comments/Immediate Corrective Action[1]
available?				
Environmental and personnel monitoring performed as specified in SSHP?			✓	
PPE				
Proper dermal protection worn by EA and subcontracted employees when handling/ contacting hazardous chemicals or contaminated environmental media?	✓			
Required PPE (hard hats, safety boots / shoes, eye protection with side shields, hearing protection) being worn by EA and subcontracted employees?	✓			
PPE inspection completed by SSHO?	✓			
Drill Rig Operations				
Daily rig inspection completed? Any equipment problems?			✓	
Drill rigs/elevated equipment maintaining minimum 10-ft distance from energized (50 kV) overhead power lines?			✓	
Investigation-derived Waste (IDW)				
Wastes properly staged, secured, and labeled at end of day?	✓			

Additional Comments:

Site Safety and Health Officer's Signature

10-23-17
Date

[1]If a deficiency is noted that cannot be immediately corrected, the SSHO will monitor the progress in correcting the deficiency and will document following:

- Date the deficiency was identified
- Description of the deficiency
- Name of the person responsible for correcting the deficiency
- Projected date of correction
- Actual date of correction.

HEALTH AND SAFETY ACTIVITY REPORT

Site: 106239 Conveyance Line Location: ABQ, NM

Weather Cond.: Clear, cool Onsite Hours: From 0700 To 1530

Changes in PPE Levels[1]	Work Operations	Reasons for Change
None		

Site Safety and Health Plan Violations	Corrective Action Specified	Corrective Action Taken [2](yes/no)
None		

Observations and Comments:

None

Completed by: _____ Date: 10/23/17

Site Health and Safety Supervisor

[1]Only SSHO may change PPE levels, using only criteria specified in APP/SSHP.

[2]If a deficiency is noted that cannot be immediately corrected, the SSHO will monitor the progress in correcting the deficiency and will document following:

- Date the deficiency was identified
- Description of the deficiency
- Name of the person responsible for correcting the deficiency
- Projected date of correction
- Actual date of correction.

ENVIRONMENTAL MONITORING RECORD

SITE: KAFB-106239 Conveyance Line Installation

PROJECT NO.: 62599DM01

INSTRUMENT: Noise Pro Series/Thermo dust monitor

Time	Monitoring Location	Reading	Corrective Action Taken[a]
0831	Calibration Noise Pro / Therm dust mon.	113.8dBA/0.080 mg/m³	
0839	sta 24 +00	70.4/0.050	
0842	sta 25 +00	78.3/0.006	

Comments: N = North, E = East, S = South, W = West

(a) Corrective actions taken must be documented whenever readings at or above action levels are reached. Monitoring equipment and action levels are specified in Section 9.33 of the Accident Prevention Plan.

Recorded By: Pete Ferrari
Site Health & Safety Officer

Date: 10-23-17

From:	Morse, Earl
To:	Simpler, Trent SPA; Amy Sanchez; Carlos Salazar; Phaneuf, Mark J SPA (Mark.J.Phaneuf@usace.army.mil); Linda Dreeland
Cc:	Jercinovic, Devon; Curley, Tyler; McKeage, Kevin; Ferrari, Peter; Bowman, Matthew; Rief, Lucas
Subject:	Activity Report for KAFB Well 106239 Conveyance Line Installation 24 October 2017
Date:	Tuesday, October 24, 2017 4:46:54 PM
Attachments:	Daily Field Activities Summary Report 10-24-17.pdf 013 CQM Daily Report 24OCT17.pdf Pictures 10-24-17.pdf

---

Issues Today Tuesday 24 October 2017:

- None

Resolution of Issues:

- None

Work Performed Today:

- Finished backfill and compaction of 8" HDPE trench from Sta 1+70 to Sta 3+20
- Welded HDPE for Louisiana bore; 120' of 8", 150' of 4", 150' of 2"
- Built and laid out on surface 500' of 4" and 2" electrical conduit east of VA entrance
- Bored pilot bore under Louisiana Blvd to Kirtland AFB fence.
- Moved Jersey barriers to protect from Sta 6+00 to Sta 9+80

Installation Completion to Date: 11%

Work Planned for 25 Oct 2017:

- Finish HDD boring and pull pipe under Louisiana Blvd
- Continue HDD prep
- Start excavation/tie-in of HDPE pipe east of VA yard entrance

Additional Information for 24 Oct 2017:

- Bixby Electric hired Advanced Environmental Solutions (AEC) to perform additional corrective actions at the Bixby hydraulic line release
  - AEC removed an additional volume (@1/2 drum) of soil from the spill area and mud pit
  - AEC collected two confirmation soil samples (one from the floor of mud pit and one from the impacted area adjacent to the pit). A profile sample was also collected. Samples to be delivered to Hall Environmental for GRO, DRO analyses
  - AEC will perform soil/waste disposal services for Bixby
- EA will take confirmation soil samples on 10/25/17 for analyses of TPH, VOC's and SVOC's at Eurofins Laboratory.
- Bixby performed an inspection of the boring rig at their facility this morning and cleared it for use prior to delivery to the site.
- Bixby will provide an SDS for the hydraulic oil used in the boring rig.
- PNM and MHC (Communication subcontractor?) stopped by to inspect the PVC pipe hit by RMCI while excavating on 10/23/17. Neither indicated the pipe belonged to them. No other utility companies came out to inspect the severed pipe today.
- RMCI indicated they will repair the damaged PVC pipe just to be safe.

Please let me know if you need additional information.

Earl L. Morse, MS, PG
EA Engineering, Science, and Technology, Inc., PBC
Project Manager/Senior Geologist
320 Gold Ave. SW, Suite 1300
Albuquerque, NM 87102
Cell: 505.238-4410
Office: 505.715.4275
Email: emorse@eaest.com
www.eaest.com

DAILY FIELD ACTIVITIES SUMMARY REPORT		
PROJECT NAME: KAFB Well 106239 Conveyance Line Installation		
Date: 10-24-17	Time Shift Beginning: 0645	Time Shift Ending:1350
Project Number: 62599DM01		Contract/Task Order No.:
Client: USACE		Report By: Earl Morse
Contractor(s): RMCI		Project Manager: Devon Jercinovic
Design Manager:		Oversight Manager: Earl Morse
Design Engineer: George Nemeth		Site Engineer: Kevin McKeage
Weather: Clear/warm 72° F		Logbook Number: NA
Personnel Onsite:	**Name:**	**Reason for Being Onsite:**
EA	Earl Morse Pete Ferrari Kevin McKeage	Construction and Safety Oversight SSHO-Borings CQM
Wilson Electric	Jamie Perez Britt Crooks	Electrical conduit install
RMCI	Jerry Patton Robert BeBault Felipe Hernandez Marcos Torres Jesus Moya George Ingram	General Contractor
Bixby Electric	Manuel De Leon Jasper Apachito	Boring Contractor
Advanced Environmental Services	Andy Saiz Harry Hegasey Epmar Chavez	Environmental contractor for Bixby Electric. Soil removal, sampling

Work Performed:

Planned Activities:

- Finish backfill and compaction of 8" HDPE trench from Sta 1+70 to Sta 3+00
- Weld HDPE for Louisiana bore
- Build and layout 4" and 2" electrical conduit east of VA entrance
- Bore and pull pipe under Louisiana Blvd into Kirtland AFB.
- Move Jersey barriers

Completed Activities:

- Finished backfill and compaction of 8" HDPE trench from Sta 1+70 to Sta 3+20
- Welded HDPE for Louisiana bore; 120' of 8", 150' of 4", 150' of 2"
- Built and laid out on surface 500' of 4" and 2" electrical conduit east of VA entrance
- Bored pilot bore under Louisiana Blvd to Kirtland AFB fence.
- Moved Jersey barriers to protect from Sta 6+00 to Sta 9+80

Material Deliveries:

- 500' of SCH 40 PVC electrical pipe and small junction box from Wilson Electric

Construction Quality Control Activities or Samples Collected:

- Inspection of all newly received materials. See CQM report.

Observations or Possible Variations from Specifications: • None

Anticipated Activities for the Following Day:	
• Finish HDD boring and pull pipe under Louisiana Blvd • Continue HDD prep • Start excavation/tie-in of HDPE pipe east of VA yard entrance **Planned Material Deliveries:** • Electrical piping	
Contractor Reports, Manifests, Documents Reviewed and Logged:	
None	
Report Completed By:	
Earl Morse	Date: 24 October 2017

KOMATSU

JT2020
MACH 1
8213
Ditch Witch

DAILY REPORT

(ATTACH ADDITIONAL SHEETS IF NECESSARY)

CONTRACT NAME:	Kirtland AFB Bulk Fuels Facility Expansion of Dissolved Plume GWTS Design	REPORT NO:	013
CONTRACT NUMBER:	W912DR-12-D-0006	REPORT DATE:	24 OCT 17
REVISION NUMBER:	-	REVISION DATE:	-
TASK ORDER NUMBER:	DM01	PROJECT NAME / LOCATION:	Kirtland BFF
PROJECT NUMBER:	62599DM01	PROJECT DESCRIPTION:	Installation of KAFB-106239 Conveyance Line
PROJECT MANAGER:	Devon Jercinovic	FIELD QUALITY MANAGER:	Kevin McKeage
CONSTRUCTION MANAGER:	Earl Morse	SITE SAFETY MANAGER:	Pete Ferrari

AM WEATHER:	Clear Cold	PM WEATHER:	Clear Cool	MAX TEMP (F):	66		

SUMMARY OF WORK PERFORMED TODAY

CQM Inspections of PVC Pipe and Electrical Pullbox.

HEALTH AND SAFETY REPORT

SAFETY ACTIONS TAKEN TODAY/SAFETY INSPECTIONS CONDUCTED (Include Observations, Safety Violations, Corrective Instructions Given, Corrective Actions Taken, and Results of Safety Inspections Conducted:

See Construction Manager's Daily Report

TAILGATE TOPICS:

"

SAFE BEHAVIOR OBSERVATIONS/SELF-ASSESSMENTS:

"

OPERATIONS/PRODUCTION REPORT

WORK FORCE – CONTRACTOR AND SUBCONTRACTOR

Company	Cumulative Total of Work Hours From Previous Report	Total Hours Today	Total Work Hours From Start of Injection Event
See CM's Daily Report			

EQUIPMENT ON HAND

Description of Equipment	Make/Model/ Manufacturer	Equipment ID Number	Inspection Performed By
Water Truck	Kobrade Kenworth	4610	Robert Behnke
Excavator	Volvo L-120	2310	Jesus Moyon
Loader	Komatsu PC-200	1107	Jesus Moyon
HDPE Welder	McElroy Tracstar	8617	Jerry Patton
HDPE Welder	McElroy Tracstar	8618	Not in use
Backhoe	John Deere 310SJ	1419	Jesus Moyon.

COMMENTS (acceptance status, inspection findings, etc.):

OK

WORK AND/OR TESTS ACCOMPLISHED OR IN PROGRESS

Performed Work/Test for Today: See CM's Daily Report

Planned Work/Test for Tomorrow: "

Planned Work/Test for Next Week: "

CHANGED CONDITIONS/DELAY/CONFLICTS ENCOUNTERED (List any conflicts with the project [i.e., scope of work and/or drawings], delays to the project attributable to site and weather conditions, etc. "

VISITORS AND DISCUSSIONS: "

QUALITY CONTROL REPORT

MATERIALS DELIVERED TO JOB SITE

Quantity/Volume/ Weight	Description of Materials Received	Make/Model/ Manufacturer	Material Lot Number	Inspection Performed By
500 ft	PVC Conduit 2" + 4"	Cantex, Schedule 40	–	KM
1	Pull box Tier 22	PG3G3GBA36	–	KM

COMMENTS (acceptance status, inspection findings, etc.): Materials Accepted

INSPECTIONS PERFORMED

Task/Activity Inspected	Inspection Performed	Findings
Horizontal Drilling	Visual Inspection	OK
Spoil Sampling	Visual Inspection	OK

TESTS PERFORMED

Task/Activity Tested	Test Performed	Test Results (Pass/Fail) - Criteria
None		

QUALITY ISSUES AND RESOLUTIONS: None

SUBMITTALS INSPECTION / REVIEW

Submittal No.	Submittal Description	Specification/Plan Reference	Submittal Approved?		Comment/Reason/Action
NA	Daily Report	–	Yes ☐	No ☐	Pending
NA	SBO	–	Yes ☐	No ☐	Pending
NA	PTSP	–	Yes ☐	No ☐	Pending

REGULATORY COMPLIANCE REPORT							
PERMIT INSPECTIONS PERFORMED: None							
WASTE ACCUMULATION/STOCKPILE AREA INSPECTION							
Inspection Performed By:	NA			Signature of Inspector:			
Accumulation / Stockpile Area Inspected:							
No of Bins:		No of Tankers		No of Roll-Off Boxes:		No. of Tanks	
Inspection Results: NA							
GENERAL COMMENTS							
General Comments: (rework, directives, etc.): Materials inspected and inspections OK.							
ATTACHMENTS							
List of Attachments: (examples, as applicable: submittals, meeting minutes, safety meeting minutes, COCs, weight tickets, manifests, profiles, rework item list, RFIs, DCNs, photographs, etc.): Photo log							
NOTE: Write all entries legibly in ink. Line out all unused portions or designate as "not applicable". Preparer signs first and last name on each completed daily report. This form may be filled out electronically and signed electronically.				PREPARER'S SIGNATURE		24 OCT 17 DATE	

Location: Station 25+00
Description: Advanced Environmental Solutions Confirmation Samples
Date: 24 October 2017 Direction: North

Location: Station 25+00
Description: Horizontal Drilling Rig on Plastic Sheeting
Date: 24 October 2017 Direction: North

Location: Laydown Yard
Description: 2" and 4" PVC Conduit
Date: 24 October 2017 Direction: West

Location: North of EA Laydown Yard
Description: Pull Box
Date: 24 October 2017 Direction: Down

EA Engineering, Science, and Technology, Inc

106239 Conveyance Line

Employee/Visitor Register and Safety Brief

Date: 10-24-2017

Site Entry/Exit		Name (Printed)	Signature	Company
Time In	Time Out			
7:00	1530	Jerry Patton	Jerry Patton	RMCI
7:00		Robert BeBault	Robert BeBault	RMCI
7:00		Marcos Torres	Marcos Torres	RMCI
7:00		Felipe Hernandez	Felipe Hernandez	RMCI
7:00		George Ingram	George Ingram	RMCI
7:00		Jesus Moyer	Jesus Moyer	RMCI
0700		Earl Morse	Earl Morse	EA
0700		Pete Ferrer	Pete Ferrer	EA
7:00	1400	Manuel Deleon	Manuel Deleon	Bixby
7:00	1400	Jasper Apachito	Jasper Apachito	Bixby
10:20	1325	Kevin McKeever	Kevin McKeever	EA
1000	1100	Andy Saiz		AES
1070	1100	Harry Hegasey		AES
1030	1100	Edmar Chavez		AES
1130	1445	Brian Crooks	BC	Wilson
1150	1445	Jaime Trevino Perez		Wilson

EA ENGINEERING, SCIENCE AND TECHNOLOGY, INC.
SAFETY MEETING REPORT

Date: 10-24-17	**Time:** 0700	**Duration of meeting:** 10 min	**Project #** 62599.0101
Location: 106239 Conveyance Line		**Task:** Excavation / construction	

Type of meeting: X **Daily** ___ **Weekly** ___ **Monthly** ___ **Other:** _____

Items/Issues discussed:

1. Entering / Exiting vehicles
2. Backing
3. Awareness of workers around you
4.
5.

Attach minutes of safety meeting if taken.

Safety questions/issues raised:	**Actions/Follow-up needed:**
1. None	
2.	
3.	
4.	
5.	
6.	

Remarks: None

Meeting conducted by: Eric Morse

EA Engineering, Science, and Technology, Inc.

DAILY SAFETY INSPECTION CHECKLIST
(TO BE COMPLETED EACH DAY OF CONSTRUCTION OR HTRW SITE ACTIVITIES)

Site: 106239 Conveyance Line
Location: ABQ, NM
Project No.: 62599DM01.1009
Client: USACE

Prepared by SSHO: Earl Mase
Project Manager: Devon Jerabek
Date: 10-24-2017

Rating	Y	N	N/A	Comments/Immediate Corrective Action[1]
Accident Prevention Plan (APP) and Site Safety and Health Plan (SSHP) General Requirements				
Are there new onsite personnel? • Did they receive pre-entry briefing and are their names recorded in field logbook or daily log? • Was the USACE PM made aware of the new personnel. • Required training and medical surveillance documentation received (e.g., 40-hr, 8 hr, etc.)?		✓		
Did personnel sign in/out of site?	✓			
Daily tailgate safety meetings conducted and documented?	✓			
Were new activities performed today? Were hazards identified, discussed during the daily safety tailgate, and incorporated into revised APP/SSHP?		✓		
New materials brought on site? MSDSs available?		✓		
Exclusion (EZ), Contamination Reduction (CRZ), and Support Zones (SZ) delineated and enforced?			✓	
General housekeeping measures in place to prevent hazards?	✓			
Emergency Planning				
Were there any changes to emergency contact names, telephone numbers, or hospital? If so, were site personnel made aware and was information distributed/reposted.		✓		
Adequate safety equipment inventory available?	✓			
Fire extinguisher available (monthly inspection of extinguisher will suffice)	✓			
Eyewash station(s) functioning and in place (weekly inspection of eye wash station will suffice)?	✓			
First aid supplies available (weekly inspection of first aid kit will suffice)?	✓			
Communication equipment readily available for emergencies?	✓			
Any reported accidents/incidents at this site? If so, were accident reporting procedures followed?		✓		
Air Monitoring				
Monitoring equipment specified in SSHP available and in working order? Air monitoring instrumentation for this site includes – check each if required/on site, note deficiencies in comments: • Combustible gas meter • Organic vapor analyzer • Contaminant specific analyzer for benzene (if total organic vapor concentrations exceed 0.5 ppm)			✓	
Monitoring equipment calibrated and calibration records			✓	

Y = Satisfactory or Yes; N = Unsatisfactory or No, N/A = Not applicable

Rating	Y	N	N/A	Comments/Immediate Corrective Action[1]
available?				
Environmental and personnel monitoring performed as specified in SSHP?	✓			Dust / Noise
PPE				
Proper dermal protection worn by EA and subcontracted employees when handling/ contacting hazardous chemicals or contaminated environmental media?	✓			
Required PPE (hard hats, safety boots / shoes, eye protection with side shields, hearing protection) being worn by EA and subcontracted employees?	✓			
PPE inspection completed by SSHO?	.	✓		
Drill Rig Operations				
Daily rig inspection completed? Any equipment problems?			✓	
Drill rigs/elevated equipment maintaining minimum 10-ft distance from energized (50 kV) overhead power lines?			✓	
Investigation-derived Waste (IDW)				
Wastes properly staged, secured, and labeled at end of day?	✓			

Additional Comments:

Ed Mann
Site Safety and Health Officer's Signature

10-24-17
Date

[1]If a deficiency is noted that cannot be immediately corrected, the SSHO will monitor the progress in correcting the deficiency and will document following:

- Date the deficiency was identified
- Description of the deficiency
- Name of the person responsible for correcting the deficiency
- Projected date of correction
- Actual date of correction.

HEALTH AND SAFETY ACTIVITY REPORT

Site: 106239 Conveyance Line Location: ABQ, NM

Weather Cond.: Breezy, Cool Onsite Hours: From 0700 To 1600

Changes in PPE Levels[1]	Work Operations	Reasons for Change
None		

Site Safety and Health Plan Violations	Corrective Action Specified	Corrective Action Taken [2](yes/no)
None		

Observations and Comments:

None

Completed by: Ed Mann Date: 10-24-17

Site Health and Safety Supervisor

[1]Only SSHO may change PPE levels, using only criteria specified in APP/SSHP.

[2]If a deficiency is noted that cannot be immediately corrected, the SSHO will monitor the progress in correcting the deficiency and will document following:

- Date the deficiency was identified
- Description of the deficiency
- Name of the person responsible for correcting the deficiency
- Projected date of correction
- Actual date of correction.

From:	Bowman, Matthew
To:	Morse, Earl; Simpler, Trent SPA; Amy Sanchez; Carlos Salazar; Phaneuf, Mark J SPA (Mark.J.Phaneuf@usace.army.mil); Linda Dreeland
Cc:	Jercinovic, Devon; Curley, Tyler; McKeage, Kevin; Ferrari, Peter; Rief, Lucas
Subject:	Activity Report for KAFB Well 106239 Conveyance Line Installation 25 October 2017
Date:	Wednesday, October 25, 2017 10:10:51 PM
Attachments:	Daily Field Activities Summary Report 10-25-17.pdf 014 CQM Daily Report 25OCT17.pdf Pictures 10-25-17.pdf

---

Issues Today Tuesday 25 October 2017:

- None

Resolution of Issues:

- None

Work Performed Today:

- Completed welding of approximately 400 linear feet of HDPE piping for Sta 5+90 to Sta 9+90
- Completed welding of flanged HDPE Tee for access to the leak detection system
- Completed Boring and pulled pipe under Louisiana Blvd into Kirtland AFB.
- Completed the assembly and layout of 480 linear feet of 4-inch and 2-inch electrical conduit east of VA entrance

Installation Completion to Date: 14%

Work Planned for 25 Oct 2017:

- Begin HDD boring for underground electric and fiber optic on Kirtland AFB
- Perform HDPE piping welding in preparation for trenching on Kirtland AFB
- Resume excavation and continue installation of HDPE pipe and electrical conduit assembled along Ridgecrest Drive

Please let me know if you need additional information.

Matthew Bowman
Matthew Bowman, PE, CCM
Lead Construction Quality Engineer
EA Engineering, Science, and Technology, Inc., PBC
307 W Pearl St.
North Salem, Indiana 46165
p: (989) 277-4852
mbowman@eaest.com
http://www.eaest.com

DAILY FIELD ACTIVITIES SUMMARY REPORT		
PROJECT NAME: KAFB Well 106239 Conveyance Line Installation		
Date: 10-25-17	Time Shift Beginning: 0700	Time Shift Ending:1545
Project Number: 62599DM01		Contract/Task Order No.:
Client: USACE		Report By: Matthew Bowman
Contractor(s): RMCI		Project Manager: Devon Jercinovic
Design Manager:		Oversight Manager: Matthew Bowman
Design Engineer: George Nemeth		Site Engineer: Kevin McKeage
Weather: Clear/warm 75° F		Logbook Number: NA
Personnel Onsite:	**Name:**	**Reason for Being Onsite:**
EA	Earl Morse Matthew Bowman Pete Ferrari Kevin McKeage	Construction and Safety Oversight Construction and Safety Oversight SSHO-Borings CQM
Wilson Electric	Jamie Perez Britt Crooks	Electrical conduit install
RMCI	Jerry Patton Robert BeBault Felipe Hernandez Marcos Torres Jesus Moya George Ingram Ed Hase	General Contractor
Bixby Electric	Manuel De Leon Jasper Apachito	Boring Contractor

Work Performed:

Planned Activities:

- Complete welding of HDPE piping for Sta 5+90 to Sta 9+90
- Bore and pull pipe under Louisiana Blvd into Kirtland AFB.
- Continue to build and layout 4-inch and 2-inch electrical conduit east of VA entrance

Completed Activities:

- Completed welding of approximately 400 linear feet of HDPE piping for Sta 5+90 to Sta 9+90
- Completed welding of flanged HDPE Tee for access to the leak detection system
- Completed Boring and pulled pipe under Louisiana Blvd into Kirtland AFB.
- Completed the assembly and layout of 480 linear feet of 4-inch and 2-inch electrical conduit east of VA entrance

Material Deliveries:

- 540 feet of 2-inch SCH 40 PVC electrical conduit and 540 feet of 4-inch SCH 40 PVC electrical conduit from Wilson Electric

Construction Quality Control Activities or Samples Collected:

- Inspection of all newly received materials. See CQM report.

• Soil samples collected for analysis of TPH, GRO, DRO, etc. for follow-up to hydraulic leak. • Dust monitoring and dosimeter readings collected by the SSHO.
Observations or Possible Variations from Specifications: • None

Anticipated Activities for the Following Day:	
• Begin HDD boring for underground electric and fiber optic on Kirtland AFB • Perform HDPE piping welding in preparation for trenching on Kirtland AFB • Resume excavation and continue installation of HDPE pipe and electrical conduit assembled along Ridgecrest Drive **Planned Material Deliveries:** • None	
Contractor Reports, Manifests, Documents Reviewed and Logged:	
None	
Report Completed By:	
Matthew Bowman	Date: 25 October 2017

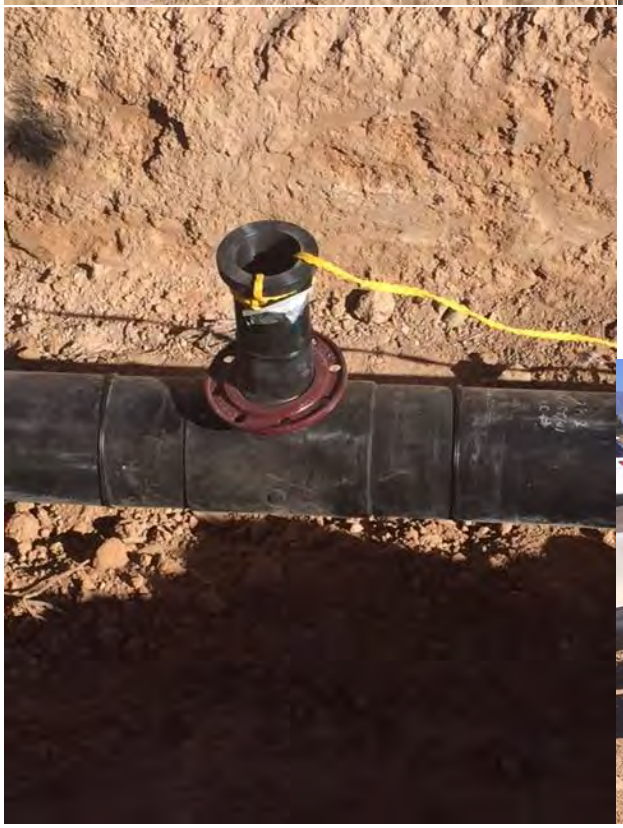

DAILY REPORT

(ATTACH ADDITIONAL SHEETS IF NECESSARY)

CONTRACT NAME:	Kirtland AFB Bulk Fuels Facility Expansion of Dissolved Plume GWTS Design	REPORT NO:	014
CONTRACT NUMBER:	W912DR-12-D-0006	REPORT DATE:	25 OCT 17
REVISION NUMBER:	-	REVISION DATE:	-
TASK ORDER NUMBER:	DM01	PROJECT NAME / LOCATION:	Kirtland BFF
PROJECT NUMBER:	62599DM01	PROJECT DESCRIPTION:	Installation of KAFB-106239 Conveyance Line
PROJECT MANAGER:	Devon Jercinovic	FIELD QUALITY MANAGER:	Kevin McKeage
CONSTRUCTION MANAGER:	Matt Bowman	SITE SAFETY MANAGER:	Earl Nase

AM WEATHER:	Clear Cold	PM WEATHER:	Clear Warm	MAX TEMP (F):	70		

SUMMARY OF WORK PERFORMED TODAY

CQM Inspection of PVC Conduit

HEALTH AND SAFETY REPORT

SAFETY ACTIONS TAKEN TODAY/SAFETY INSPECTIONS CONDUCTED (Include Observations, Safety Violations, Corrective Instructions Given, Corrective Actions Taken, and Results of Safety Inspections Conducted:

See Construction Manager's Daily Report

TAILGATE TOPICS:

"

SAFE BEHAVIOR OBSERVATIONS/SELF-ASSESSMENTS:

"

OPERATIONS/PRODUCTION REPORT

WORK FORCE – CONTRACTOR AND SUBCONTRACTOR

Company	Cumulative Total of Work Hours From Previous Report	Total Hours Today	Total Work Hours From Start of Injection Event
See CM's Daily Report			

EQUIPMENT ON HAND

Description of Equipment	Make/Model/ Manufacturer	Equipment ID Number	Inspection Performed By
Water truck	Colorado Kenworth	4610	Robert Beckwith
Excavator	Volvo L-120	2310	Jesus Moya
Loader	Komatsu PC-200	1107	Jesus Moya
HDPE Welder	McElroy Tracstar	8617	Jerry Patton
HDPE Welder	McElroy Tracstar	8618	Not in Use
Backhoe	John Deere 310SJ	1415	Jesus Moya

COMMENTS (acceptance status, inspection findings, etc.):

OK

WORK AND/OR TESTS ACCOMPLISHED OR IN PROGRESS

Performed Work/Test for Today: See CM's Daily Report

Planned Work/Test for Tomorrow: "

Planned Work/Test for Next Week: "

CHANGED CONDITIONS/DELAY/CONFLICTS ENCOUNTERED (List any conflicts with the project [i.e., scope of work and/or drawings], delays to the project attributable to site and weather conditions, etc. "

VISITORS AND DISCUSSIONS: "

QUALITY CONTROL REPORT

MATERIALS DELIVERED TO JOB SITE

Quantity/Volume/ Weight	Description of Materials Received	Make/Model/ Manufacturer	Material Lot Number	Inspection Performed By
540'	4" and 2" Conduit	Cantex, Sch. 40	—	ISM

COMMENTS (acceptance status, inspection findings, etc.): Materials Accepted.

INSPECTIONS PERFORMED

Task/Activity Inspected	Inspection Performed	Findings
None		

TESTS PERFORMED

Task/Activity Tested	Test Performed	Test Results (Pass/Fail) - Criteria
Hand Ex. for Soil Sampling	Sampled for TPH, DRO, GRO, Etc.	Pending Analysis

QUALITY ISSUES AND RESOLUTIONS: None

SUBMITTALS INSPECTION / REVIEW

Submittal No.	Submittal Description	Specification/Plan Reference	Submittal Approved?		Comment/Reason/Action
NA	Daily Report	–	Yes ☐	No ☐	Pending
NA	SBO	–	Yes ☐	No ☐	Pending
NA	PTSP	–	Yes ☐	No ☐	Pending

REGULATORY COMPLIANCE REPORT							
PERMIT INSPECTIONS PERFORMED: None							
WASTE ACCUMULATION/STOCKPILE AREA INSPECTION							
Inspection Performed By:	NA			Signature of Inspector:			
Accumulation / Stockpile Area Inspected:							
No of Bins:		No of Tankers		No of Roll-Off Boxes:		No. of Tanks	
Inspection Results: NA							
GENERAL COMMENTS							
General Comments: (rework, directives, etc.): Samples collected from hydraulic oil leak							
ATTACHMENTS							
List of Attachments: (examples, as applicable: submittals, meeting minutes, safety meeting minutes, COCs, weight tickets, manifests, profiles, rework item list, RFIs, DCNs, photographs, etc.): Photo log							
NOTE: Write all entries legibly in ink. Line out all unused portions or designate as "not applicable". Preparer signs first and last name on each completed daily report. This form may be filled out electronically and signed electronically.				PREPARER'S SIGNATURE		25 OCT 17 DATE	

Location: Laydown Yard
Description: 4" PVC Conduit
Date: 25 October 2017 Direction: Down

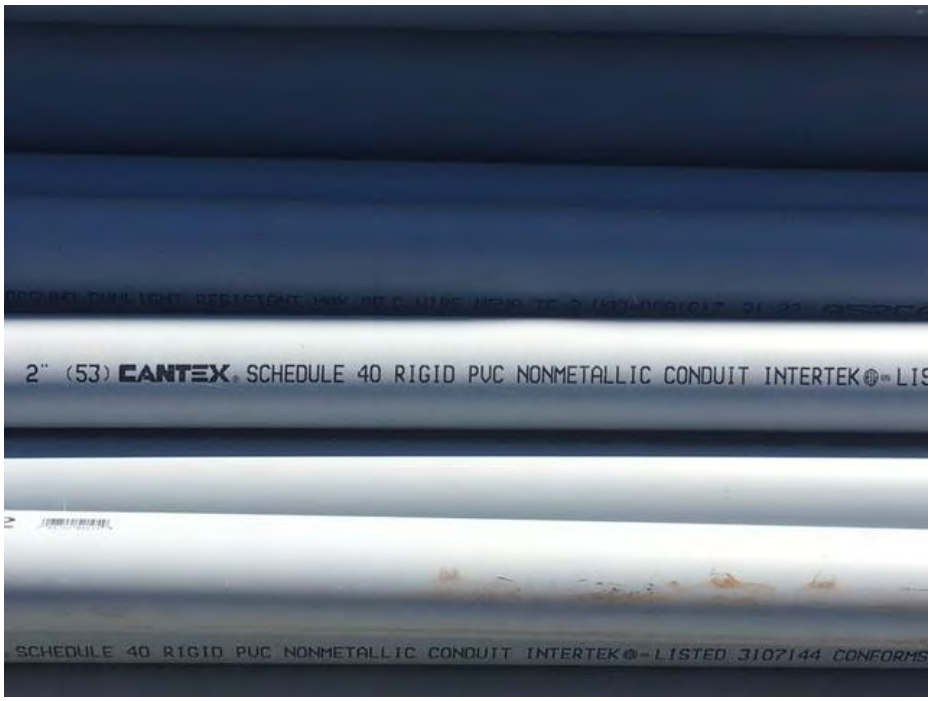

Location: Laydown Yard
Description: 2" PVC Conduit
Date: 25 October 2017 Direction: Down

EA Engineering, Science, and Technology, Inc

853-9111 KAFB Emergency 106239 Conveyance Line

Employee/Visitor Register and Safety Brief

Date: 10-25-2017

Site Entry/Exit		Name (Printed)	Signature	Company
Time In	Time Out			
0652	1430	Jasper Apachito	Jasper Apachito	Bixby
7:00	1430	Manuel DeLeon	Manuel DeLeon	Bixby
7:00	1545	MARCOS TORRES		RMCI
700	1545	Robert Barrett	Robert Barrett	RMCI
7:00	1545	George Ingram		RMCI
7,00	1545	Jesus Moyer		RMCI
7100	1545	Felipe Hernandez	Felipe Hernandez	RMCI
0700	1430	Pete Ferrand	Pete Ferrand	EA
700	1545	Jerry Patton		RMCI
700	1545	[illegible]		RMCI
700	1545	Jaime Jessica Perez		Wilson Electric
900	1545	MATTHEW BOARMAN		EA
1100	1145	Amy Sanchez	Amy Sanchez	USACE
1000	1545	Britt CROOKS		WILSON
0645	1410	Earl Moore	Earl Moore	EA

EA ENGINEERING, SCIENCE AND TECHNOLOGY, INC.
SAFETY MEETING REPORT

Date: 10-25-2017	**Time:** 0700	**Duration of meeting:** 10	**Project #** 62899001
Location: 106239 Conveyance Line		**Task:** Excavation / boring	

Type of meeting: X **Daily** ___ **Weekly** ___ **Monthly** ___ **Other:** _____

Items/Issues discussed:

1. On-base safety
2. KAFB Emergency 853-9111
3. Traffic and speed limits
4.
5.

Attach minutes of safety meeting if taken.

Safety questions/issues raised:	Actions/Follow-up needed:
1. None	
2.	
3.	
4.	
5.	
6.	

Remarks: None

Meeting conducted by:
Frank Mouse

EA Engineering, Science, and Technology, Inc.

DAILY SAFETY INSPECTION CHECKLIST
(TO BE COMPLETED EACH DAY OF CONSTRUCTION OR HTRW SITE ACTIVITIES)

Site: 106239 Conveyance Line
Location: ABQ, NM
Project No.: 62599DM01.1009.02
Client: USACE

Prepared by SSHO: Earl Morse
Project Manager: Devon Jerauld
Date: 10-25-17

Rating	Y	N	N/A	Comments/Immediate Corrective Action[1]
Accident Prevention Plan (APP) and Site Safety and Health Plan (SSHP) General Requirements				
Are there new onsite personnel? • Did they receive pre-entry briefing and are their names recorded in field logbook or daily log? • Was the USACE PM made aware of the new personnel. • Required training and medical surveillance documentation received (e.g., 40-hr, 8 hr, etc.)?	✓			Matt Bowman
Did personnel sign in/out of site?	✓			
Daily tailgate safety meetings conducted and documented?	✓			
Were new activities performed today? Were hazards identified, discussed during the daily safety tailgate, and incorporated into revised APP/SSHP?		✓		
New materials brought on site? MSDSs available?		✓		
Exclusion (EZ), Contamination Reduction (CRZ), and Support Zones (SZ) delineated and enforced?			✓	
General housekeeping measures in place to prevent hazards?	✓			
Emergency Planning				
Were there any changes to emergency contact names, telephone numbers, or hospital? If so, were site personnel made aware and was information distributed/reposted.		✓		
Adequate safety equipment inventory available?	✓			
Fire extinguisher available (monthly inspection of extinguisher will suffice)	✓			
Eyewash station(s) functioning and in place (weekly inspection of eye wash station will suffice)?	✓			
First aid supplies available (weekly inspection of first aid kit will suffice)?	✓			
Communication equipment readily available for emergencies?	✓			
Any reported accidents/incidents at this site? If so, were accident reporting procedures followed?		✓		
Air Monitoring				
Monitoring equipment specified in SSHP available and in working order? Air monitoring instrumentation for this site includes – check each if required/on site, note deficiencies in comments: • Combustible gas meter • Organic vapor analyzer • Contaminant specific analyzer for benzene (if total organic vapor concentrations exceed 0.5 ppm)			✓	
Monitoring equipment calibrated and calibration records			✓	

Y = Satisfactory or Yes; N = Unsatisfactory or No, N/A = Not applicable

Rating	Y	N	N/A	Comments/Immediate Corrective Action[1]
available?			✓	
Environmental and personnel monitoring performed as specified in SSHP?			✓	
PPE				
Proper dermal protection worn by EA and subcontracted employees when handling/ contacting hazardous chemicals or contaminated environmental media?	✓			
Required PPE (hard hats, safety boots / shoes, eye protection with side shields, hearing protection) being worn by EA and subcontracted employees?	✓			
PPE inspection completed by SSHO?			✓	
Drill Rig Operations				
Daily rig inspection completed? Any equipment problems?			✓	
Drill rigs/elevated equipment maintaining minimum 10-ft distance from energized (50 kV) overhead power lines?			✓	
Investigation-derived Waste (IDW)				
Wastes properly staged, secured, and labeled at end of day?	✓			

Additional Comments:

Site Safety and Health Officer's Signature

10-25-2017
Date

[1]If a deficiency is noted that cannot be immediately corrected, the SSHO will monitor the progress in correcting the deficiency and will document following:

- Date the deficiency was identified
- Description of the deficiency
- Name of the person responsible for correcting the deficiency
- Projected date of correction
- Actual date of correction.

HEALTH AND SAFETY ACTIVITY REPORT

Site: 106239 Conveyance Line Location: ABQ, NM

Weather Cond.: Clear 72° Onsite Hours: From 0700 To 1530

Changes in PPE Levels[1]	Work Operations	Reasons for Change
None		

Site Safety and Health Plan Violations	Corrective Action Specified	Corrective Action Taken [2](yes/no)
None		

Observations and Comments:
Boring pull trench was not compliant with OSHA requirements on initial cut. EA had RMCI pull back the excavation on the east and ~~west~~ southside to improve safety.

Completed by: [signature] Date: 10/25/17
Site Health and Safety Supervisor

[1]Only SSHO may change PPE levels, using only criteria specified in APP/SSHP.
[2]If a deficiency is noted that cannot be immediately corrected, the SSHO will monitor the progress in correcting the deficiency and will document following:

- Date the deficiency was identified
- Description of the deficiency
- Name of the person responsible for correcting the deficiency
- Projected date of correction
- Actual date of correction.

ENVIRONMENTAL MONITORING RECORD

SITE: KAFB-106239 Conveyance Line Installation

PROJECT NO.: 62599DM01

INSTRUMENT: Noise Pro Series/thermo dust monitor

Time	Monitoring Location	Reading	Corrective Action Taken[(a)]
1416	Calibrate	113.8 dBg / 0.000 mg/m³	
1419	sta 9+00	71.3 / 0.012	
1422	sta 8+00	PT ~~78~~ 66.0 / 0.016	

Comments: N = North, E = East, S = South, W = West

(a) Corrective actions taken must be documented whenever readings at or above action levels are reached. Monitoring equipment and action levels are specified in Section 9.33 of the Accident Prevention Plan.

Recorded By: Pete Ferrari
Site Health & Safety Officer

Date: 10/25/17

Rush TAT 5 day Turn around

225 Schilling Circle Suite
400 Hunt Valley MD
Tel No: (410) 584-7000
Fax No. (410) 771-1625

CHAIN-OF-CUSTODY RECORD

COC NUMBER: COC-SP-01-102517

YEAR: 2017

QUARTER: Q4

PROJECT NAME: Kirtland AFB Bulk Fuels Facility	PROJECT NUMBER: 62599DM01.1009.02	LABORATORY NAME AND CONTACT: Eurofins Lancaster Laboratories 2425 New Holland Pike Lancaster PA 17601	FAX AND MAIL REPORTS/EDD TO: Tara Lamond: tlamond@eaest.com EA; Amanda Smith: asmith@eaest.com EA
			FAX AND MAIL REPORTS/EDD TO: Pam Moss: pmoss@eaest.com EA
PROJECT SITE AND PHASE: ST106/SS111		LAB PO NUMBER: 14800	LAB CONTACT: Kay Hower KayHower@eurofinsUS.com Eurofins 1 (717) 556-7258

ITEM	SAMPLE IDENTIFIER	DATE COLLECTED	TIME COLLECTED	Total Number of Bottles	(8260C) VOCs	(8260C) BTEX	(8260C) BTEXN	(8011) EDB	(6020A/6010C) Total As,Pb,Ca,K,Na,Mg	(6010C) Dissolved Fe, Mn	(300.0) Chloride, bromide, sulfate	(353.2) Nitrate-Nitrite	(SM4500NH3) Ammonia	(SM4500S2CF) Sulfide	(SM2320B) Alkalinity	COMMENTS
				ANALYSIS REQUIRED (Specify number of bottles)												
1	SP239-01-102517	10/25/17	0825	3												East bench of bore pit
2	SP239-02-102517	10/25/17	0835	3												Bottom of bore pit
3																
4																
5																
6																

COMMENTS: *Dissolved Fe, Mn aliquot was field filtered.

Each sample has 3 x 4 oz. jars for TPH, GRO, DRO, ORO, Moisture, VOCs, and SVOCs.

SAMPLER(S): Peter Ferrari

COURIER AND SHIPPING NUMBER: Fedex: 8111 5533 9051

RELINQUISHED BY: Printed Name and Signature:	DATE	TIME	RECEIVED BY: Printed Name and Signature:	DATE	TIME
Peter Ferrari Peter Ferrari	10/25/17	1200			
Printed Name and Signature:			Printed Name and Signature:		
Printed Name and Signature:			Printed Name and Signature:		
Printed Name and Signature:			Printed Name and Signature:		

FedEx
TRK# 0667 8111 5533 9051

THU - 26 OCT 10:30A
PRIORITY OVERNIGHT

XH LNSA

17601
PA-US
MDT

FedEx Express **Expanded Billable Stamp**

Use only for shipments within the U.S.
Saturday delivery available.

1 From

ORDER: 00833453

_____

_____

(___) ___-_____

Package Weight

NONREDEEMABLE
If you require a different amount of declared value, please use a FedEx US Airbill.

DECLARED VALUE $100

Do not put this receipt on your package.

2 To *Shipment will not be accepted if address below is altered.*

SAMPLE RECEIVING
LANCASTER LABORATORIES
2425 NEW HOLLAND PIKE
LANCASTER, PA 17601
(717) 656-2300

FedEx Priority Overnight

Next business morning by 10:30 a.m. Not available to all locations. Please consult the current FedEx Service Guide for specific commitments. Please see the back of this receipt for important terms and conditions.

8111553390 51

fedex.com 1.800.GoFedEx 1.800.463.3339

From:	Bowman, Matthew
To:	Morse, Earl; Simpler, Trent SPA; Amy Sanchez; Carlos Salazar; Phaneuf, Mark J SPA (Mark.J.Phaneuf@usace.army.mil); Linda Dreeland
Cc:	Jercinovic, Devon; Curley, Tyler; McKeage, Kevin; Ferrari, Peter; Rief, Lucas
Subject:	Activity Report for KAFB Well 106239 Conveyance Line Installation 26 October 2017
Date:	Thursday, October 26, 2017 9:09:51 PM
Attachments:	Daily Field Activities Summary Report 10-26-17.pdf 015 CQM Report 26OCT17.pdf Pictures 10-26-17.pdf

---

Issues Today Tuesday 26 October 2017:

- None

Resolution of Issues:

- None

Work Performed Today:

- Completed trench excavation and pipe/conduit placement for approximately 310 linear feet of HDPE piping along Ridgecrest Drive from Sta 5+90 to Sta 9+00. Completed concrete placement for electrical conduits (two cement truck loads).
- Completed HDD one boring for underground electric and fiber optic on Kirtland AFB and pulled piping for 230 linear feet.
- Completed HDPE piping welding in preparation for trenching on Kirtland AFB.
- Began installation of chain link fencing and gate (set posts) around the electrical pad adjacent to the VA Parking Area.
- Began unistrut assembly and installation for panels on the electrical pad.

Installation Completion to Date: 16%

Work Planned for 27 Oct 2017:

- Continue backfill and compaction of open trench along Ridgecrest Drive
- Complete installation of chain link fencing and gate (install gate and pull fabric) around the electrical pad adjacent to the VA Parking Area
- Continue unistrut assembly and installation for panels on the electrical pad

Please let me know if you need additional information.

Matthew Bowman
Matthew Bowman, PE, CCM
Lead Construction Quality Engineer
EA Engineering, Science, and Technology, Inc., PBC
307 W Pearl St.
North Salem, Indiana 46165
p: (989) 277-4852
mbowman@eaest.com
http://www.eaest.com

DAILY FIELD ACTIVITIES SUMMARY REPORT		
PROJECT NAME: KAFB Well 106239 Conveyance Line Installation		
Date: 10-26-17	Time Shift Beginning: 0700	Time Shift Ending:1600
Project Number: 62599DM01		Contract/Task Order No.:
Client: USACE		Report By: Matthew Bowman
Contractor(s): RMCI		Project Manager: Devon Jercinovic
Design Manager:		Oversight Manager: Matthew Bowman
Design Engineer: George Nemeth		Site Engineer: Kevin McKeage
Weather: Clear/warm 75° F		Logbook Number: NA
Personnel Onsite:	**Name:**	**Reason for Being Onsite:**
EA	Earl Morse Matthew Bowman Pete Ferrari Kevin McKeage	Construction and Safety Oversight Construction and Safety Oversight SSHO-Borings CQM
Wilson Electric	Jamie Perez Britt Crooks	Electrical conduit install
RMCI	Jerry Patton Robert BeBault Felipe Hernandez Marcos Torres Jesus Moya George Ingram Ed Hyde	General Contractor
Bixby Electric	Manuel De Leon Jasper Apachito	Boring Contractor
Ramcor Tri-West	Luis Ruiz Carlos Montez	Fence Installation

Work Performed:

Planned Activities:

- Begin HDD boring for underground electric and fiber optic on Kirtland AFB
- Perform HDPE piping welding for trenching on Kirtland AFB
- Resume excavation and continue installation of HDPE pipe and electrical conduit assembled along Ridgecrest Drive

Completed Activities:

- Completed trench excavation and pipe/conduit placement for approximately 310 linear feet of HDPE piping along Ridgecrest Drive from Sta 5+90 to Sta 9+00. Completed concrete placement for electrical conduits (two cement truck loads). (Wilson Electrical and RMCI)
- Completed HDD one boring for underground electric and fiber optic on Kirtland AFB and pulled piping for 230 linear feet (Bixby Electrical)
- Completed HDPE piping welding in preparation for trenching on Kirtland AFB (RMCI)
- Began installation of chain link fencing and gate (set posts) around the electrical pad adjacent to the VA Parking Area (Ramcor Tri-West)
- Began unistrut assembly and installation for panels on the electrical pad (Wilson Electrical)

Material Deliveries:

- Fencing materials for the electrical pad.

Construction Quality Control Activities or Samples Collected:

- Inspection of all newly received materials. See CQM report.
- Excavation depth checks to ensure pipe installation depth was per Contract Drawings.
- Dust monitoring and dosimeter readings collected by the SSHO.

Observations or Possible Variations from Specifications:

- Based on discussions with CQM and RMCI, the original fencing alignment shown in the Contract Drawings were not changed (despite the modest electrical pad alignment adjustment previous approved and installed) to avoid any further conflict with existing landscaping. The gate opening was adjusted approximately one foot along its planned alignment to match the current planned location of the transformer.
- Confirm the approval of the deviation from the Contract Drawings that the two-inch and four-inch conduits are to be placed adjacent to each other and covered with concrete.

Anticipated Activities for the Following Day:

- Continue backfill and compaction of open trench along Ridgecrest Drive (RMCI)
- Complete installation of chain link fencing and gate (install gate and pull fabric) around the electrical pad adjacent to the VA Parking Area (Ramcor Tri-West)
- Continue unistrut assembly and installation for panels on the electrical pad (Wilson Electric)

Planned Material Deliveries:

- None

Contractor Reports, Manifests, Documents Reviewed and Logged:

None

Report Completed By:

Matthew Bowman	Date: 26 October 2017

KOMATSU
RMCI
KOMA

DAILY REPORT

(ATTACH ADDITIONAL SHEETS IF NECESSARY)

CONTRACT NAME:	Kirtland AFB Bulk Fuels Facility Expansion of Dissolved Plume GWTS Design	REPORT NO:	015
CONTRACT NUMBER:	W912DR-12-D-0006	REPORT DATE:	26OCT17
REVISION NUMBER:	-	REVISION DATE:	-
TASK ORDER NUMBER:	DM01	PROJECT NAME / LOCATION:	Kirtland BFF
PROJECT NUMBER:	62599DM01	PROJECT DESCRIPTION:	Installation of KAFB-106239 Conveyance Line
PROJECT MANAGER:	Devon Jercinovic	FIELD QUALITY MANAGER:	Kevin McKenzie
CONSTRUCTION MANAGER:	Matt Bowman	SITE SAFETY MANAGER:	Earl Morse

AM WEATHER:	Clear Cold	PM WEATHER:	Clear Warm	MAX TEMP (F):	76		

SUMMARY OF WORK PERFORMED TODAY

CQM Inspection of fence materials and Unistrut.

HEALTH AND SAFETY REPORT

SAFETY ACTIONS TAKEN TODAY/SAFETY INSPECTIONS CONDUCTED (Include Observations, Safety Violations, Corrective Instructions Given, Corrective Actions Taken, and Results of Safety Inspections Conducted:

See Construction Manager's Daily Report

TAILGATE TOPICS:

"

SAFE BEHAVIOR OBSERVATIONS/SELF-ASSESSMENTS:

"

OPERATIONS/PRODUCTION REPORT

WORK FORCE – CONTRACTOR AND SUBCONTRACTOR

Company	Cumulative Total of Work Hours From Previous Report	Total Hours Today	Total Work Hours From Start of Injection Event
See CM's Daily Report			

EQUIPMENT ON HAND

Description of Equipment	Make/Model/ Manufacturer	Equipment ID Number	Inspection Performed By
Water Truck	Colorado Kenworth	4610	Robert Bekenalt
Excavator	Volvo L-120	2310	Jesus Moya
Loader	Komatsu PC-200	1107	Jesus Moya
HDPE Welder	McElroy Tracstar	8617	Jerry Patton
HDPE Welder	McElroy Tracstar	8618	Nathin Ise
Backhoe	John Deere 310SJ	1415	Jesus Moya

COMMENTS (acceptance status, inspection findings, etc.):

OK

WORK AND/OR TESTS ACCOMPLISHED OR IN PROGRESS

Performed Work/Test for Today: See CM's Daily Report

Planned Work/Test for Tomorrow: "

Planned Work/Test for Next Week: "

CHANGED CONDITIONS/DELAY/CONFLICTS ENCOUNTERED (List any conflicts with the project [i.e., scope of work and/or drawings], delays to the project attributable to site and weather conditions, etc. "

VISITORS AND DISCUSSIONS: "

QUALITY CONTROL REPORT

MATERIALS DELIVERED TO JOB SITE

Quantity/Volume/ Weight	Description of Materials Received	Make/Model/ Manufacturer	Material Lot Number	Inspection Performed By
50'	P1000 Unistrut	—	—	KM
Various	Fence Components	—	—	KM

COMMENTS (acceptance status, inspection findings, etc.): Materials accepted.

INSPECTIONS PERFORMED

Task/Activity Inspected	Inspection Performed	Findings
None		

TESTS PERFORMED

Task/Activity Tested	Test Performed	Test Results (Pass/Fail) - Criteria
None		

QUALITY ISSUES AND RESOLUTIONS: None

SUBMITTALS INSPECTION / REVIEW

Submittal No.	Submittal Description	Specification/Plan Reference	Submittal Approved?		Comment/Reason/Action
NA	Daily Report	_	Yes ☐	No ☐	Pending
NA	SBO	_	Yes ☐	No ☐	Pending
NA	PTSP	_	Yes ☐	No ☐	Pending

REGULATORY COMPLIANCE REPORT							
PERMIT INSPECTIONS PERFORMED: None							
WASTE ACCUMULATION/STOCKPILE AREA INSPECTION							
Inspection Performed By:	NA			Signature of Inspector:			
Accumulation / Stockpile Area Inspected:							
No of Bins:		No of Tankers		No of Roll-Off Boxes:		No. of Tanks	
Inspection Results: NA							
GENERAL COMMENTS							
General Comments: (rework, directives, etc.): Materials Accepted.							
ATTACHMENTS							
List of Attachments: (examples, as applicable: submittals, meeting minutes, safety meeting minutes, COCs, weight tickets, manifests, profiles, rework item list, RFIs, DCNs, photographs, etc.):							
NOTE: Write all entries legibly in ink. Line out all unused portions or designate as "not applicable". Preparer signs first and last name on each completed daily report. This form may be filled out electronically and signed electronically.				PREPARER'S SIGNATURE		26 OCT 17 DATE	

Location: VA Lot
Description: Fence Materials
Date: 26 October 2017 Direction: Down

Location: VA Lot
Description: Fence Materials
Date: 26 October 2017 Direction: Down

Location: VA Lot
Description: P1000 Unistrut
Date: 26 October 2017 Direction: Down

EA Engineering, Science, and Technology, Inc

853-9111 KAFB EMERGENCY 106239 CONVEYANCE LINE

Employee/Visitor Register and Safety Brief

Date: 10-26-2017

Site Entry/Exit		Name (Printed)	Signature	Company
Time In	Time Out			
6:45	16:00	MATTHEW BOWMAN		EA
7:15	15:30	Marcos Torres		RMCI
7:00	15:30	Robert BeBault		RMCI
7:00	15:30	George Ingram		RMCI
7:00	15:30	Jasper Apachito		Bixby
7:00	15:30	Manuel Delcon		Bixby
7:00	15:30	Jesus Moya		RMCI
7:00	15:30	Felipe Hernandez		RMCI
7:00	15:00	Earl Morse		EA
7:00	15:30	Pete Ferrara		EA
7:00	15:30	Sergy Patton		RMCI
7:00	16:00	ED HYDE		RMCI
0830	14:30	Britt Crooks		WILSON
830	14:30	Jaime Trujillo Ruiz		wilson electric
845	16:00	Luis Ruiz		Ramcor TriWest
845	16:00	Carlos Montes		Ranco Triwest
0830	1005	Kevin McKaye		EA

EA ENGINEERING, SCIENCE AND TECHNOLOGY, INC.
SAFETY MEETING REPORT

Date: 10/26/17	**Time:** 0700	**Duration of meeting:** 10	**Project #** 62549 DM01
Location: 106239 CONVEYANCE LINE		**Task:** BOMING, PIPE FUSING, TRENCHING	

Type of meeting: X **Daily** ___ **Weekly** ___ **Monthly** ___ **Other:** _____

Items/Issues discussed:

1. SLIPS, TRIPS, FALLS ASSOCIATED WITH DEBRIS
2. OVERHEAD ELECTRICAL LINES SAFE DISTANCES
3. PPE USAGE (GLOVES, HARD HAT, HEARING PROTECTION, ETC)
4. WATCH PEDESTRIANS AND PUBLIC
5.

Attach minutes of safety meeting if taken.

Safety questions/issues raised:	Actions/Follow-up needed:
1. NONE	
2.	
3.	
4.	
5.	
6.	

Remarks: NONE

Meeting conducted by:
MATT BOWMAN

EA Engineering, Science, and Technology, Inc.

DAILY SAFETY INSPECTION CHECKLIST (TO BE COMPLETED EACH DAY OF CONSTRUCTION OR HTRW SITE ACTIVITIES)

Site: 106239 CONVENIANCE LINE
Location: ABQ NM
Project No.: 62595.DM01.1009.02
Client: USACE

Prepared by SSHO: MATT BOWMAN
Project Manager: DEVON JERCINOVIC
Date: 10-26-17

Rating	Y	N	N/A	Comments/Immediate Corrective Action[1]
Accident Prevention Plan (APP) and Site Safety and Health Plan (SSHP) General Requirements				
Are there new onsite personnel? • Did they receive pre-entry briefing and are their names recorded in field logbook or daily log? • Was the USACE PM made aware of the new personnel. • Required training and medical surveillance documentation received (e.g., 40-hr, 8 hr, etc.)?		✓		
Did personnel sign in/out of site?	✓			
Daily tailgate safety meetings conducted and documented?	✓			
Were new activities performed today? Were hazards identified, discussed during the daily safety tailgate, and incorporated into revised APP/SSHP?		✓		
New materials brought on site? MSDSs available?		✓		
Exclusion (EZ), Contamination Reduction (CRZ), and Support Zones (SZ) delineated and enforced?			✓	
General housekeeping measures in place to prevent hazards?	✓			DISCUSSED IN TAILGATE
Emergency Planning				
Were there any changes to emergency contact names, telephone numbers, or hospital? If so, were site personnel made aware and was information distributed/reposted.		✓		
Adequate safety equipment inventory available?	✓			
Fire extinguisher available (monthly inspection of extinguisher will suffice)	✓			
Eyewash station(s) functioning and in place (weekly inspection of eye wash station will suffice)?	✓			
First aid supplies available (weekly inspection of first aid kit will suffice)?	✓			
Communication equipment readily available for emergencies?	✓			
Any reported accidents/incidents at this site? If so, were accident reporting procedures followed?		✓		
Air Monitoring				
Monitoring equipment specified in SSHP available and in working order? Air monitoring instrumentation for this site includes – check each if required/on site, note deficiencies in comments: • Combustible gas meter • Organic vapor analyzer • Contaminant specific analyzer for benzene (if total organic vapor concentrations exceed 0.5 ppm)			✓	
Monitoring equipment calibrated and calibration records			✓	

Y = Satisfactory or Yes; N = Unsatisfactory or No, N/A = Not applicable

Rating	Y	N	N/A	Comments/Immediate Corrective Action[1]
available?				
Environmental and personnel monitoring performed as specified in SSHP?			✓	
PPE				
Proper dermal protection worn by EA and subcontracted employees when handling/ contacting hazardous chemicals or contaminated environmental media?	✓			
Required PPE (hard hats, safety boots / shoes, eye protection with side shields, hearing protection) being worn by EA and subcontracted employees?	✓			
PPE inspection completed by SSHO?			✓	
Drill Rig Operations				
Daily rig inspection completed? Any equipment problems?			✓	
Drill rigs/elevated equipment maintaining minimum 10-ft distance from energized (50 kV) overhead power lines?			✓	
Investigation-derived Waste (IDW)				
Wastes properly staged, secured, and labeled at end of day?	✓			

Additional Comments:

Site Safety and Health Officer's Signature

10-26-17

Date

[1]If a deficiency is noted that cannot be immediately corrected, the SSHO will monitor the progress in correcting the deficiency and will document following:

- Date the deficiency was identified
- Description of the deficiency
- Name of the person responsible for correcting the deficiency
- Projected date of correction
- Actual date of correction.

HEALTH AND SAFETY ACTIVITY REPORT

Site: 106239 CONVEYANCE LINE Location: ABQ. NM

Weather Cond.: WARM CLEAR 75 Onsite Hours: From 0700 To 1600

Changes in PPE Levels[1]	Work Operations	Reasons for Change
NONE		

Site Safety and Health Plan Violations	Corrective Action Specified	Corrective Action Taken [2](yes/no)
NONE		

Observations and Comments:
GOOD PPE USAGE

Completed by: _____ Date: 10-26-17
Site Health and Safety Supervisor

[1]Only SSHO may change PPE levels, using only criteria specified in APP/SSHP.
[2]If a deficiency is noted that cannot be immediately corrected, the SSHO will monitor the progress in correcting the deficiency and will document following:

- Date the deficiency was identified
- Description of the deficiency
- Name of the person responsible for correcting the deficiency
- Projected date of correction
- Actual date of correction.

ENVIRONMENTAL MONITORING RECORD

SITE: KAFB-106239 Conveyance Line Installation

PROJECT NO.: 62599DM01

INSTRUMENT: Noise Pro Series / Thermo dust monito-

Time	Monitoring Location	Reading	Corrective Action Taken[a]
0942	Calibration	113.8dBA/0.000 mg/m³	
0949	sta 9 + 00	68.0/0.003	
0950	sta 8 + 00	65.4/0.007	
1445	sta 6 + 00	65.0/0.003	
1448	sta 5 + 00	65.1/0.002	

Comments: N = North, E = East, S = South, W = West

(a) Corrective actions taken must be documented whenever readings at or above action levels are reached. Monitoring equipment and action levels are specified in Section 9.33 of the Accident Prevention Plan.

Recorded By: _____ Date: 10-26-17

Site Health & Safety Officer

From:	Bowman, Matthew
To:	Morse, Earl; Simpler, Trent SPA; Amy Sanchez; Carlos Salazar; Phaneuf, Mark J SPA (Mark.J.Phaneuf@usace.army.mil); Linda Dreeland
Cc:	Jercinovic, Devon; Curley, Tyler; McKeage, Kevin; Ferrari, Peter; Rief, Lucas
Subject:	Activity Report for KAFB Well 106239 Conveyance Line Installation 27 October 2017
Date:	Friday, October 27, 2017 3:02:44 PM
Attachments:	Daily Field Activities Summary Report 10-27-17.pdf Pictures 10-27-17.pdf

---

Issues Today Friday 27 October 2017:

- None

Resolution of Issues:

- None

Work Performed Today:

- Completed backfill placement and compaction for approximately 270 linear feet of trenching along Ridgecrest Drive from Sta 5+90 to Sta 8+60. Tracer wire and warning tapes (three total) installed the length of this section.
- Completed HDPE piping welding in preparation for trenching along Ridgecrest Drive for 200 linear feet from Sta 9+90 to 11+90. Included installation of tee section for access to the leak detection system.
- Completed installation of chain link fencing and gate around the electrical pad adjacent to the VA Parking Area
- Continued unistrut assembly and installation for panels on the electrical pad

Installation Completion to Date: 18%

Work Planned for 30 Oct 2017:

- Continue excavation and pipe/conduit placement along Ridgecrest Drive
- Continue HDPE pipe welding in preparation for trenching along Ridgecrest Drive
- Continue unistrut assembly and installation for panels on the electrical pad

Please let me know if you need additional information.

Matthew Bowman
Matthew Bowman, PE, CCM
Lead Construction Quality Engineer
EA Engineering, Science, and Technology, Inc., PBC
307 W Pearl St.
North Salem, Indiana 46165
p: (989) 277-4852
mbowman@eaest.com
http://www.eaest.com

DAILY FIELD ACTIVITIES SUMMARY REPORT		
PROJECT NAME: KAFB Well 106239 Conveyance Line Installation		
Date: 10-27-17	Time Shift Beginning: 0700	Time Shift Ending:1400
Project Number: 62599DM01		Contract/Task Order No.:
Client: USACE		Report By: Matthew Bowman
Contractor(s): RMCI		Project Manager: Devon Jercinovic
Design Manager:		Oversight Manager: Matthew Bowman
Design Engineer: George Nemeth		Site Engineer: Kevin McKeage
Weather: Clear/cooler 55° F		Logbook Number: NA
Personnel Onsite:	**Name:**	**Reason for Being Onsite:**
EA	Matthew Bowman Pete Ferrari	Construction and Safety Oversight SSHO Support
Wilson Electric	Jamie Perez Britt Crooks	Electrical rack install
RMCI	Jerry Patton Robert BeBault Felipe Hernandez Marcos Torres Jesus Moya George Ingram Ed Hyde	General Contractor
Ramcor Tri-West	Luis Ruiz Carlos Montez	Fence Installation

Work Performed:

Planned Activities:

- Continue backfill and compaction of open trench along Ridgecrest Drive (RMCI)
- Complete installation of chain link fencing and gate (install gate and pull fabric) around the electrical pad adjacent to the VA Parking Area (Ramcor Tri-West)
- Continue unistrut assembly and installation for panels on the electrical pad (Wilson Electric)

Completed Activities:

- Completed backfill placement and compaction for approximately 270 linear feet of trenching along Ridgecrest Drive from Sta 5+90 to Sta 8+60. Tracer wire and warning tapes (three total) installed the length of this section.
- Completed HDPE piping welding in preparation for trenching along Ridgecrest Drive for 200 linear feet from Sta 9+90 to 11+90 (RMCI). Included installation of tee section for access to the leak detection system.
- Completed installation of chain link fencing and gate around the electrical pad adjacent to the VA Parking Area (Ramcor Tri-West)
- Continued unistrut assembly and installation for panels on the electrical pad (Wilson Electrical)

Material Deliveries:

- None

Construction Quality Control Activities or Samples Collected: • Backfill lift thicknesses and compactive effort observed to ensure consistency with the Technical Specifications. No compaction testing performed during this backfill event. • Warning tape and tracer wire observed properly placed prior and during backfill • Dust monitoring and dosimeter readings collected by the SSHO.
Observations or Possible Variations from Specifications: • None

Anticipated Activities for the Following Day:	
• Continue excavation and pipe/conduit placement along Ridgecrest Drive (RMCI) • Continue HDPE pipe welding in preparation for trenching along Ridgecrest Drive (RMCI) • Continue unistrut assembly and installation for panels on the electrical pad (Wilson Electric) **Planned Material Deliveries:** • None	
Contractor Reports, Manifests, Documents Reviewed and Logged:	
None	
Report Completed By:	
Matthew Bowman	Date: 27 October 2017

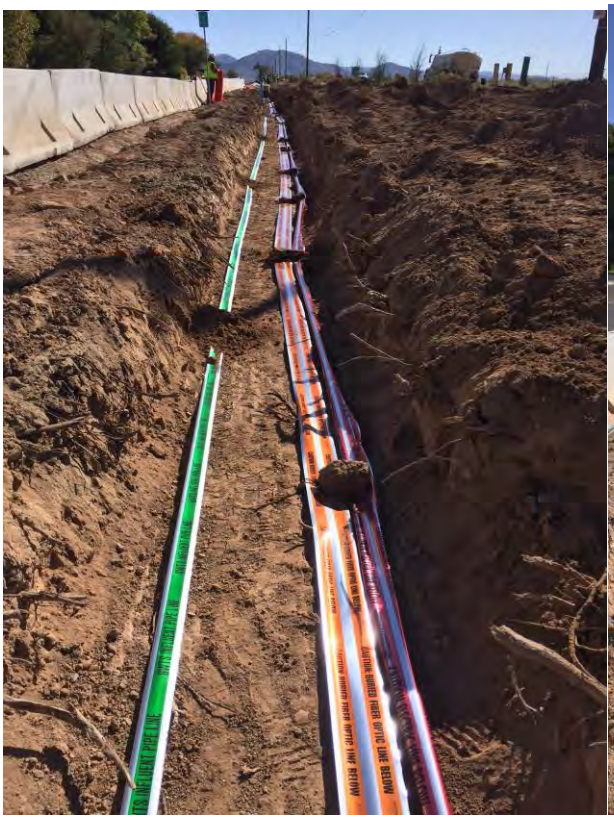
CAUTION BURIED FIBER OPTIC LINE BELOW

EA Engineering, Science, and Technology, Inc

853 - 9111 KAFB EMERGENCY 106239 CONVEYANCE LINE

Employee/Visitor Register and Safety Brief

Date: 10-27-2017

Site Entry/Exit		Name (Printed)	Signature	Company
Time In	Time Out			
6:45	2:30	MATTHEW BOWMAN		EA
7:00	1230	MARCOS TORRES		R.M.C.I
7:00	1230	Jerry Patton		RMCI
7:00	1230	Felipe Hernandez		RMCI
7:00	1230	Robert BeBault		RMCI
7:00	1230	JESUS Moya		RMCI
7:00	1300	ED Hyde		RMCI
7:40	2:30	Juan Flavio Perez		Wilson Electric
8:00	2:30	Luis Ruiz		Ramcor Triwest
8:00	2:30	Carlos montes		Ramcor Triwest
7:40	2:30	Britt Crooks		Wilson
10:15	10:40	Pete Ferrari		EA

EA ENGINEERING, SCIENCE AND TECHNOLOGY, INC.
SAFETY MEETING REPORT

Date: 10/27/17	**Time:** 0700	**Duration of meeting:** 10	**Project #** 62569.0101
Location: 106239 CONVEYANCE LINE		**Task:** TRENCH BACKFILL, FENCE CONSTRUCTION	

Type of meeting: X **Daily** ___ **Weekly** ___ **Monthly** ___ **Other:** _____

Items/Issues discussed:

1. WORKER SAFETY AROUND HEAVY EQUIPMENT
2. CHANGE IN WEATHER - WINDY, COOLER TEMPERATURES
3. TRAFFIC SAFETY ON RIDGECREST
4.
5.

Attach minutes of safety meeting if taken.

Safety questions/issues raised:	Actions/Follow-up needed:
1. NONE	
2.	
3.	
4.	
5.	
6.	

Remarks: NONE

Meeting conducted by:

MATT BOWMAN

EA Engineering, Science, and Technology, Inc.

DAILY SAFETY INSPECTION CHECKLIST (TO BE COMPLETED EACH DAY OF CONSTRUCTION OR HTRW SITE ACTIVITIES)

Site: 106239 CONVEYANCE LINE
Location: ABP NM
Project No.: 62569.DM01.1009.02
Client: USACE

Prepared by SSHO: MATT BOWMAN
Project Manager: DEVON JERKOVIC
Date: 10-27-17

Rating	Y	N	N/A	Comments/Immediate Corrective Action[1]
Accident Prevention Plan (APP) and Site Safety and Health Plan (SSHP) General Requirements				
Are there new onsite personnel? • Did they receive pre-entry briefing and are their names recorded in field logbook or daily log? • Was the USACE PM made aware of the new personnel. • Required training and medical surveillance documentation received (e.g., 40-hr, 8 hr, etc.)?		✓		
Did personnel sign in/out of site?	✓			
Daily tailgate safety meetings conducted and documented?	✓			
Were new activities performed today? Were hazards identified, discussed during the daily safety tailgate, and incorporated into revised APP/SSHP?		✓		
New materials brought on site? MSDSs available?		✓		
Exclusion (EZ), Contamination Reduction (CRZ), and Support Zones (SZ) delineated and enforced?			✓	
General housekeeping measures in place to prevent hazards?	✓			
Emergency Planning				
Were there any changes to emergency contact names, telephone numbers, or hospital? If so, were site personnel made aware and was information distributed/reposted.		✓		
Adequate safety equipment inventory available?	✓			
Fire extinguisher available (monthly inspection of extinguisher will suffice)	✓			
Eyewash station(s) functioning and in place (weekly inspection of eye wash station will suffice)?	✓			
First aid supplies available (weekly inspection of first aid kit will suffice)?	✓			
Communication equipment readily available for emergencies?	✓			
Any reported accidents/incidents at this site? If so, were accident reporting procedures followed?		✓		
Air Monitoring				
Monitoring equipment specified in SSHP available and in working order? Air monitoring instrumentation for this site includes – check each if required/on site, note deficiencies in comments: • Combustible gas meter • Organic vapor analyzer • Contaminant specific analyzer for benzene (if total organic vapor concentrations exceed 0.5 ppm)			✓	
Monitoring equipment calibrated and calibration records			✓	

Y = Satisfactory or Yes; N = Unsatisfactory or No, N/A = Not applicable

Rating	Y	N	N/A	Comments/Immediate Corrective Action[1]
available?				
Environmental and personnel monitoring performed as specified in SSHP?			✓	
PPE				
Proper dermal protection worn by EA and subcontracted employees when handling/ contacting hazardous chemicals or contaminated environmental media?	✓			
Required PPE (hard hats, safety boots / shoes, eye protection with side shields, hearing protection) being worn by EA and subcontracted employees?	✓			
PPE inspection completed by SSHO?			✓	
Drill Rig Operations				
Daily rig inspection completed? Any equipment problems?			✓	
Drill rigs/elevated equipment maintaining minimum 10-ft distance from energized (50 kV) overhead power lines?			✓	
Investigation-derived Waste (IDW)				
Wastes properly staged, secured, and labeled at end of day?	✓			
Additional Comments:				

Site Safety and Health Officer's Signature

10-27-17

Date

[1]If a deficiency is noted that cannot be immediately corrected, the SSHO will monitor the progress in correcting the deficiency and will document following:

- Date the deficiency was identified
- Description of the deficiency
- Name of the person responsible for correcting the deficiency
- Projected date of correction
- Actual date of correction.

HEALTH AND SAFETY ACTIVITY REPORT

Site: 106239 CONVENANCE LINE Location: ABQ. NM

Weather Cond.: MOSTLY CLEAR 50 Onsite Hours: From 0700 To _____

Changes in PPE Levels[1]	Work Operations	Reasons for Change
NONE		

Site Safety and Health Plan Violations	Corrective Action Specified	Corrective Action Taken [2](yes/no)
NONE		

Observations and Comments:
NOTED THAT ONE WORKER NEEDED TO PUT ON HARD HAT. EMPLOYEE IMMEDIATELY MADE CORRECTION.

Completed by: MATT BOWMAN Date: 10-27-17
Site Health and Safety Supervisor

[1]Only SSHO may change PPE levels, using only criteria specified in APP/SSHP.
[2]If a deficiency is noted that cannot be immediately corrected, the SSHO will monitor the progress in correcting the deficiency and will document following:

- Date the deficiency was identified
- Description of the deficiency
- Name of the person responsible for correcting the deficiency
- Projected date of correction
- Actual date of correction.

ENVIRONMENTAL MONITORING RECORD

SITE: KAFB-106239 Conveyance Line Installation

PROJECT NO.: 62599DM01

INSTRUMENT: Noise Pro Series / Thermo Dust Monitor

Time	Monitoring Location	Reading	Corrective Action Taken[a]
10:22	Calibrate	114.0 dBa/0.000 mg/m³	
10:25	sta 6 +00	69.1/0.002	
10:28	sta 5 +33	65.1/0.002	

Comments: N = North, E = East, S = South, W = West

(a) Corrective actions taken must be documented whenever readings at or above action levels are reached. Monitoring equipment and action levels are specified in Section 9.33 of the Accident Prevention Plan.

Recorded By: Pete Ferrari
Site Health & Safety Officer

Date: 10-27-17

From:	Curley, Tyler
To:	"Trent.Simpler@usace.army.mil"; "Amy.E.Sanchez@usace.army.mil"; "Carlos.F.Salazar@usace.army.mil"; "Linda.Dreeland@usace.army.mil"; "Mark.J.Phaneuf@usace.army.mil"
Cc:	Jercinovic, Devon; McKeage, Kevin; Morse, Earl; Rief, Lucas
Subject:	Activity Report for KAFB Well 106239 Conveyance Line Installation 30 October 2017
Date:	Monday, October 30, 2017 10:29:44 PM
Attachments:	Daily Field Activities Summary Report.pdf Photos 10-30-17.pdf 016 CQM Daily Report 30OCT17.pdf

---

Issues Today Friday 30 October 2017:

- None

Resolution of Issues:

- None

Work Performed Today:

- Welded 380 linear feet of pipe from Sta 11+90 to Sta 15+70
- Trenched and installed conveyance piping and electrical conduits from Sta9 9+90 to Sta 11+90
- Capped electrical conduits with concrete from Sta 9+90 to Sta 11+90
- Continued installation of the electrical rack
- Performed density testing at Sta 4+40 and Sta 8+40

Installation Completion to Date: 20%

Work Planned for 31 Oct 2017:

- Backfill and compaction
- Continue welding HDPE pipe for conveyance line
- Move jersey barriers

Please let me know if you need additional information.

Tyler Curley, P.E.
EA Engineering, Science, and Technology, Inc., PBC
320 Gold Avenue, SW Suite 1300
Albuquerque, NM 87120
(505) 715-4422 work
(719) 688-9558 cell
tcurley@eaest.com

DAILY FIELD ACTIVITIES SUMMARY REPORT		
PROJECT NAME: KAFB Well 106239 Conveyance Line Installation		
Date: 10-30-17	Time Shift Beginning: 0700	Time Shift Ending:1630
Project Number: 62599DM01		Contract/Task Order No.:
Client: USACE		Report By: Tyler Curley
Contractor(s): RMCI		Project Manager: Devon Jercinovic
Design Manager:		Oversight Manager: Tyler Curley
Design Engineer: George Nemeth		Site Engineer: Tyler Curley
Weather: Sunny 70° F/Windy		Logbook Number: NA
Personnel Onsite:	**Name:**	**Reason for Being Onsite:**
EA	Tyler Curley Pete Ferrari	Construction/Safety Oversight Field Assistance
USACE	Todd Cleveland Trent Simpler	Site Visit/Oversight Site Visit/Oversight
RMCI	Jerry Patton Ed Hyde Phillip Johnson Felipe Hernandez Robert BeBault Jesus Moya Marcos Torres Angel Castaneda George Ingram Lorenzo Tena	General Contractor
Wilson Electric	Britt Crooks Jaime Perez	Electrical Contractor
All American Precast	Colin Howard	Site Visit (RMCI Sub)
CA 2 Testing	Daniel Marquez	Density Testing (RMCI Sub)

Work Performed:

Planned Activities:

- Continue excavation and pipe/conduit placement along Ridgecrest Drive
- Continue welding HDPE pipe in preparation for trenching along Ridgecrest Drive
- Continue unistrut assembly and installation for panels on the electrical pad

Completed Activities:

- Welded 380 linear feet of pipe from Sta 11+90 to Sta 15+70
- Trenched and installed conveyance piping and electrical conduits from Sta9 9+90 to Sta 11+90
- Capped electrical conduits with concrete from Sta 9+90 to Sta 11+90
- Continued installation of the electrical rack
- Performed density testing at Sta 4+40 and Sta 8+40

Material Deliveries:

- None

Construction Quality Control Activities or Samples Collected:

- Density testing

Observations or Possible Variations from Specifications: • None

Anticipated Activities for the Following Day:	
• Backfill and compaction • Continue welding HDPE pipe for conveyance line • Move jersey barriers **Planned Material Deliveries:** • None	
Contractor Reports, Manifests, Documents Reviewed and Logged:	
None	
Report Completed By:	
Tyler Curley	Date: 30 October 2017

TRACTTAIR
McELROY

RMCI

DAILY REPORT

(ATTACH ADDITIONAL SHEETS IF NECESSARY)

CONTRACT NAME:	Kirtland AFB Bulk Fuels Facility Expansion of Dissolved Plume GWTS Design	REPORT NO:	016
CONTRACT NUMBER:	W912DR-12-D-0006	REPORT DATE:	30 OCT 17
REVISION NUMBER:	-	REVISION DATE:	-
TASK ORDER NUMBER:	DM01	PROJECT NAME / LOCATION:	Kirtland BFF
PROJECT NUMBER:	62599DM01	PROJECT DESCRIPTION:	Installation of KAFB-106239 Conveyance Line
PROJECT MANAGER:	Devon Jercinovic	FIELD QUALITY MANAGER:	Kevin McKeage
CONSTRUCTION MANAGER:	Tyler Curley	SITE SAFETY MANAGER:	Tyler Curley

AM WEATHER:	Clear Cool	PM WEATHER:	Windy Partly Cloudy, Cool	MAX TEMP (F):	64		

SUMMARY OF WORK PERFORMED TODAY

CQM Review of Density Test Results.

HEALTH AND SAFETY REPORT

SAFETY ACTIONS TAKEN TODAY/SAFETY INSPECTIONS CONDUCTED (Include Observations, Safety Violations, Corrective Instructions Given, Corrective Actions Taken, and Results of Safety Inspections Conducted:

See Construction Manager's Daily Report

TAILGATE TOPICS:

"

SAFE BEHAVIOR OBSERVATIONS/SELF-ASSESSMENTS:

"

OPERATIONS/PRODUCTION REPORT

WORK FORCE – CONTRACTOR AND SUBCONTRACTOR

Company	Cumulative Total of Work Hours From Previous Report	Total Hours Today	Total Work Hours From Start of Injection Event
See CM's Daily Report.			

EQUIPMENT ON HAND

Description of Equipment	Make/Model/ Manufacturer	Equipment ID Number	Inspection Performed By
Water truck	Colorado Kenworth	4610	Robert Rebant
Excavator	Volvo L-120	2310	Jesus Moya
Loader	Komatsu PC-200	1107	Jesus Moya
HDPE Welder	McElroy Tracster	8617	Joey Patton
HDPE Welder	McElroy Tracster	8618	Not in Use
Backhoe	John Deere 310SJ	1415	Jesus Moya

COMMENTS (acceptance status, inspection findings, etc.):

OK

WORK AND/OR TESTS ACCOMPLISHED OR IN PROGRESS

Performed Work/Test for Today: Desity Testing

Planned Work/Test for Tomorrow: See CMS Daily Report

Planned Work/Test for Next Week: "

CHANGED CONDITIONS/DELAY/CONFLICTS ENCOUNTERED (List any conflicts with the project [i.e., scope of work and/or drawings], delays to the project attributable to site and weather conditions, etc. "

VISITORS AND DISCUSSIONS: "

QUALITY CONTROL REPORT

MATERIALS DELIVERED TO JOB SITE

Quantity/Volume/ Weight	Description of Materials Received	Make/Model/ Manufacturer	Material Lot Number	Inspection Performed By
None				

COMMENTS (acceptance status, inspection findings, etc.): NA

INSPECTIONS PERFORMED

Task/Activity Inspected	Inspection Performed	Findings
None		

TESTS PERFORMED

Task/Activity Tested	Test Performed	Test Results (Pass/Fail) - Criteria
Density Testing	Compaction: Desity + Moisture	All Lifts Pass.

QUALITY ISSUES AND RESOLUTIONS: None

SUBMITTALS INSPECTION / REVIEW

Submittal No.	Submittal Description	Specification/Plan Reference	Submittal Approved?		Comment/Reason/Action
NA	Daily Report	_	Yes ☐	No ☐	Pending
NA	SBO	_	Yes ☐	No ☐	Pending
NA	PTSP	_	Yes ☐	No ☐	Pending

REGULATORY COMPLIANCE REPORT							
PERMIT INSPECTIONS PERFORMED: None							
WASTE ACCUMULATION/STOCKPILE AREA INSPECTION							
Inspection Performed By:	NA			Signature of Inspector:			
Accumulation / Stockpile Area Inspected:							
No of Bins:		No of Tankers		No of Roll-Off Boxes:		No. of Tanks	
Inspection Results: NA							
GENERAL COMMENTS							
General Comments: (rework, directives, etc.): OK, Desity and Moisture from Stations 4+40 and 8+40							
ATTACHMENTS							
List of Attachments: (examples, as applicable: submittals, meeting minutes, safety meeting minutes, COCs, weight tickets, manifests, profiles, rework item list, RFIs, DCNs, photographs, etc.): Photo log							
NOTE: Write all entries legibly in ink. Line out all unused portions or designate as "not applicable". Preparer signs first and last name on each completed daily report. This form may be filled out electronically and signed electronically.				PREPARER'S SIGNATURE		DATE: 30OCT17	

Location: Station 4+40
Description: Compaction Testing
Date: 30 October 2017 Direction: Down

Location: Station 8+40
Description: Compaction Test Results (Formal copy to be submitted at a later date)
Date: 30 October 2017 Direction: Down

EA Engineering, Science, and Technology, Inc

Employee/Visitor Register and Safety Brief

Date: 10-30-17

Site Entry/Exit		Name (Printed)	Signature	Company
Time In	Time Out			
7:00	1630	Robert BeBault	Robert BeBault	RMCI
7:00		George Ingram		RMCI
7	-	Marcos Tores		RMCI
7:00		Lorenzo Tena	Lorenzo Tena	RMCI
7:00		Angel Castaneda	Angel Castaneda	RMCI
7:00		Felipe Hernandez	Felipe Hernandez	RMCI
7:00		Jesus Moya		RMCI
7:00		Ed Hyde		RMCI
7:00		Jerry Patton	Jerry Patton	RMCI
8:10	8:50	Todd Cleveland		USACE
9:30	11:35	Phillip Johnson		RMCI
10:10	11:15	Daniel Marquez		CA2 Testing
10:30	11:26	Colin Howard		All American Precast Inc
10:35	1445	Jaime Trevino Perez		Wilson Electric
1035	1445	Britt Crooks		WILSON
1037	1107	Pete Ferrara		EA
1330	1340	T Simpler		USACE
0700	1630	Tyler Carter		EA

EA Engineering, Science, and Technology, Inc.

DAILY SAFETY INSPECTION CHECKLIST (TO BE COMPLETED EACH DAY OF CONSTRUCTION OR HTRW SITE ACTIVITIES)

Site: KAFB well 106239
Location: Ridgecrest Dr
Project No.: 6259901
Client: USACE

Prepared by SSHO: Tyler Curley
Project Manager: Devon Jerkinovic
Date: ~~10-29-17~~ 10-30-17

Rating	Y	N	N/A	Comments/Immediate Corrective Action[1]
Accident Prevention Plan (APP) and Site Safety and Health Plan (SSHP) General Requirements				
Are there new onsite personnel? • Did they receive pre-entry briefing and are their names recorded in field logbook or daily log? • Was the USACE PM made aware of the new personnel. • Required training and medical surveillance documentation received (e.g., 40-hr, 8 hr, etc.)?	✓			
Did personnel sign in/out of site?	✓			
Daily tailgate safety meetings conducted and documented?	✓			
Were new activities performed today? Were hazards identified, discussed during the daily safety tailgate, and incorporated into revised APP/SSHP?		✓		
New materials brought on site? MSDSs available?		✓		
Exclusion (EZ), Contamination Reduction (CRZ), and Support Zones (SZ) delineated and enforced?	✓			
General housekeeping measures in place to prevent hazards?	✓			
Emergency Planning				
Were there any changes to emergency contact names, telephone numbers, or hospital? If so, were site personnel made aware and was information distributed/reposted.		✓		
Adequate safety equipment inventory available?	✓			
Fire extinguisher available (monthly inspection of extinguisher will suffice)	✓			
Eyewash station(s) functioning and in place (weekly inspection of eye wash station will suffice)?	✓			
First aid supplies available (weekly inspection of first aid kit will suffice)?	✓			
Communication equipment readily available for emergencies?	✓			
Any reported accidents/incidents at this site? If so, were accident reporting procedures followed?				
Air Monitoring				
Monitoring equipment specified in SSHP available and in working order? Air monitoring instrumentation for this site includes – check each if required/on site, note deficiencies in comments: • Combustible gas meter • Organic vapor analyzer • Contaminant specific analyzer for benzene (if total organic vapor concentrations exceed 0.5 ppm)	✓			
Monitoring equipment calibrated and calibration records	✓			

Y = Satisfactory or Yes; N = Unsatisfactory or No, N/A = Not applicable

Rating	Y	N	N/A	Comments/Immediate Corrective Action[1]
available?				
Environmental and personnel monitoring performed as specified in SSHP?	✓			
PPE				
Proper dermal protection worn by EA and subcontracted employees when handling/ contacting hazardous chemicals or contaminated environmental media?	✓			
Required PPE (hard hats, safety boots / shoes, eye protection with side shields, hearing protection) being worn by EA and subcontracted employees?	✓			
PPE inspection completed by SSHO?	✓			
Drill Rig Operations				
Daily rig inspection completed? Any equipment problems?	✓			
Drill rigs/elevated equipment maintaining minimum 10-ft distance from energized (50 kV) overhead power lines?	✓			
Investigation-derived Waste (IDW)				
Wastes properly staged, secured, and labeled at end of day?			✓	

Additional Comments:

Site Safety and Health Officer's Signature

10-30-17
Date

[1]If a deficiency is noted that cannot be immediately corrected, the SSHO will monitor the progress in correcting the deficiency and will document following:

- Date the deficiency was identified
- Description of the deficiency
- Name of the person responsible for correcting the deficiency
- Projected date of correction
- Actual date of correction.

HEALTH AND SAFETY ACTIVITY REPORT

Site: KAFB Well 106239 Location: Ridgecrest Dr

Weather Cond.: Sunny 70F/ windy Onsite Hours: From 0700 To 1630

Changes in PPE Levels[1]	Work Operations	Reasons for Change
None		

Site Safety and Health Plan Violations	Corrective Action Specified	Corrective Action Taken [2](yes/no)
None		

Observations and Comments:
None

Completed by: Tyler Curley Date: 10-30-17
Site Health and Safety Supervisor

[1]Only SSHO may change PPE levels, using only criteria specified in APP/SSHP.
[2]If a deficiency is noted that cannot be immediately corrected, the SSHO will monitor the progress in correcting the deficiency and will document following:

- Date the deficiency was identified
- Description of the deficiency
- Name of the person responsible for correcting the deficiency
- Projected date of correction
- Actual date of correction.

EA ENGINEERING, SCIENCE AND TECHNOLOGY, INC.
SAFETY MEETING REPORT

Date: 10-30-17	**Time:** 0700	**Duration of meeting:** 10 min	**Project #** 62549.0101
Location: KAFB Well 106239		**Task:** Conveyance Line Install	

Type of meeting: X **Daily** ___ **Weekly** ___ **Monthly** ___ **Other:** _____

Items/Issues discussed:

1. Slips, trips, falls
2. Crushing hazards
3. Overhead loads
4. Traffic, foot + vehicle
5. Hospital route

Attach minutes of safety meeting if taken.

Safety questions/issues raised:	Actions/Follow-up needed:
1. None	
2.	
3.	
4.	
5.	
6.	

Remarks: None

Meeting conducted by:
Tyler Curley

ENVIRONMENTAL MONITORING RECORD

SITE: KAFB-106239 Conveyance Line Installation

PROJECT NO.: 62599DM01

INSTRUMENT: Noise Pro Series / Thermo dust monitor

Time	Monitoring Location	Reading	Corrective Action Taken[a]
1043	calibrate	113.8 dBA/0.000 mg/m³	
1052	sta ~~1400~~ 14 + 00	69.7 / 0.017	
10:57	sta 13 + 00	70.8 / 0.040	

Comments: N = North, E = East, S = South, W = West

(a) Corrective actions taken must be documented whenever readings at or above action levels are reached. Monitoring equipment and action levels are specified in Section 9.33 of the Accident Prevention Plan.

Recorded By: _____ Date: _____

Site Health & Safety Officer

From:	Curley, Tyler
To:	"Trent.Simpler@usace.army.mil"; "Amy.E.Sanchez@usace.army.mil"; "Carlos.F.Salazar@usace.army.mil"; "Linda.Dreeland@usace.army.mil"; "Mark.J.Phaneuf@usace.army.mil"
Cc:	Jercinovic, Devon; McKeage, Kevin; Morse, Earl; Rief, Lucas
Subject:	Activity Report for KAFB Well 106239 Conveyance Line Installation 31 October 2017
Date:	Tuesday, October 31, 2017 5:31:45 PM
Attachments:	Photos 10-31-17.pdf Daily Field Activities Summary Report.pdf

---

Issues Today Tuesday 31 October 2017:

- None

Resolution of Issues:

- None

Work Performed Today:

- Welded 320 linear feet of pipe from Sta 15+70 to Sta 18+90
- Backfilled and compacted trench from Sta9 9+90 to Sta 11+90
- Delivered the top portion (lid and hatches) of the well head vault
- Continued installation of the electrical rack

Installation Completion to Date: 24%

Work Planned for 31 Oct 2017:

- Trenching and installation of the conveyance line and electrical conduits
- Continue welding HDPE pipe for conveyance line
- Move jersey barriers

Please let me know if you need additional information.

Tyler Curley, P.E.
EA Engineering, Science, and Technology, Inc., PBC
320 Gold Avenue, SW Suite 1300
Albuquerque, NM 87120
(505) 715-4422 work
(719) 688-9558 cell
tcurley@eaest.com

DAILY FIELD ACTIVITIES SUMMARY REPORT		
PROJECT NAME: KAFB Well 106239 Conveyance Line Installation		
Date: 10-31-17	Time Shift Beginning: 0700	Time Shift Ending:1530
Project Number: 62599DM01		Contract/Task Order No.:
Client: USACE		Report By: Tyler Curley
Contractor(s): RMCI		Project Manager: Devon Jercinovic
Design Manager:		Oversight Manager: Tyler Curley
Design Engineer: George Nemeth		Site Engineer: Tyler Curley
Weather: Sunny 70° F		Logbook Number: NA
Personnel Onsite:	**Name:**	**Reason for Being Onsite:**
EA	Earl Morse Tyler Curley Pete Ferrari	Construction/Safety Oversight Construction/Safety Oversight Field Assistance
RMCI	Jerry Patton Ed Hyde Felipe Hernandez Robert BeBault Jesus Moya Marcos Torres Angel Castaneda George Ingram Lorenzo Tena	General Contractor
Wilson Electric	Britt Crooks Jaime Perez	Electrical Contractor
All American Precast	Colin Howard	Site Visit (RMCI Sub)

Work Performed:

Planned Activities:

- Backfill and compaction
- Continue welding HDPE pipe for conveyance line
- Move jersey barriers

Completed Activities:

- Welded 320 linear feet of pipe from Sta 15+70 to Sta 18+90
- Backfilled and compacted trench from Sta9 9+90 to Sta 11+90
- Delivered the top portion (lid and hatches) of the well head vault
- Continued installation of the electrical rack

Material Deliveries:

- Top portion (lid and hatches) of the wellhead vault

Construction Quality Control Activities or Samples Collected:

- None

Observations or Possible Variations from Specifications:

- None

Anticipated Activities for the Following Day:	
• Trenching and installation of the conveyance line and electrical conduits • Continue welding HDPE pipe for conveyance line • Move jersey barriers **Planned Material Deliveries:** • Wellhead vault deliveries	
Contractor Reports, Manifests, Documents Reviewed and Logged:	
None	
Report Completed By:	
Tyler Curley	Date: 31 October 2017

EA Engineering, Science, and Technology, Inc

106239 Conveyance Line

Employee/Visitor Register and Safety Brief

Date: 10/31/2017

Site Entry/Exit		Name (Printed)	Signature	Company
Time In	Time Out			
7:00	1530	Angel Castaneda	Angel Castaneda	RMCI
7:00		Felipe Hernandez	Felipe Hernandez	RMCI
7:00		George Ingram		RMCI
7:00		Marcos Torres		RMCI
7:00		Lorenzo Tena	Lorenzo Tena	RMCI
7:00		Robert Bobbitt		RMCI
7:00		Jesus Moya		RMCI
7:00		Ed Hyde		RMCI
7:00	↓	Jerry Patton		RMCI
7:00	1500	Earl Morse		EA
8:00	12:15	Britt Crooks	BC	Wilson
8:00	12:15	Jamie Perez	JP	Wilson
0924	1015	Pete Ferrari	Pete Ferrari	EA
11:30	Noon	Colin Howard		All American Precast Inc
1430	1530	Tyler Corley		EA

ENVIRONMENTAL MONITORING RECORD

SITE: KAFB-106239 Conveyance Line Installation

PROJECT NO.: 62599DM01

INSTRUMENT: Noise Pro Series / Thermo dust control Monitor

Time	Monitoring Location	Reading	Corrective Action Taken[a]
0927	Calibrate	113.7dBA/0.000 mg/m³	
0934	sta 16+00	72.2 / 0.009	
0937	sta 15+00	68.0 / 0.010	
1430	sta 18+00	67.3 / 0.014	
1433	sta 19+00	73.0 / 0.014	

Comments: N = North, E = East, S = South, W = West

(a) Corrective actions taken must be documented whenever readings at or above action levels are reached. Monitoring equipment and action levels are specified in Section 9.33 of the Accident Prevention Plan.

Recorded By: Pete Favreau
Site Health & Safety Officer

Date: 10/31/17

EA ENGINEERING, SCIENCE AND TECHNOLOGY, INC.
SAFETY MEETING REPORT

Date: 10/31/17	**Time:** 0700	**Duration of meeting:** 10 min	**Project #** 62599DM01
Location: 106239 Conveyance Line		**Task:** Excavation/construction	

Type of meeting: X **Daily** ___ **Weekly** ___ **Monthly** ___ **Other:** _____

Items/Issues discussed:

1. Defensive Driving
2. Equipment Operation
3. Watch for birds tonight
4.
5.

Attach minutes of safety meeting if taken.

Safety questions/issues raised:	**Actions/Follow-up needed:**
1. None	
2.	
3.	
4.	
5.	
6.	

Remarks: None

Meeting conducted by:
Earl Moran

EA Engineering, Science, and Technology, Inc.

DAILY SAFETY INSPECTION CHECKLIST (TO BE COMPLETED EACH DAY OF CONSTRUCTION OR HTRW SITE ACTIVITIES)

Site: 106239 Conveyance Line
Location: AL3, NW
Project No.: 62519DMOL1009
Client: USACE

Prepared by SSHO: Email Morse
Project Manager: Devon Jovanovic
Date: 10/31/17

Rating	Y	N	N/A	Comments/Immediate Corrective Action[1]
Accident Prevention Plan (APP) and Site Safety and Health Plan (SSHP) General Requirements				
Are there new onsite personnel? • Did they receive pre-entry briefing and are their names recorded in field logbook or daily log? • Was the USACE PM made aware of the new personnel. • Required training and medical surveillance documentation received (e.g., 40-hr, 8 hr, etc.)?		✓		
Did personnel sign in/out of site?	✓			
Daily tailgate safety meetings conducted and documented?	✓			
Were new activities performed today? Were hazards identified, discussed during the daily safety tailgate, and incorporated into revised APP/SSHP?		✓		
New materials brought on site? MSDSs available?		✓		
Exclusion (EZ), Contamination Reduction (CRZ), and Support Zones (SZ) delineated and enforced?			✓	
General housekeeping measures in place to prevent hazards?	✓			
Emergency Planning				
Were there any changes to emergency contact names, telephone numbers, or hospital? If so, were site personnel made aware and was information distributed/reposted.		✓		
Adequate safety equipment inventory available?	✓			
Fire extinguisher available (monthly inspection of extinguisher will suffice)	✓			
Eyewash station(s) functioning and in place (weekly inspection of eye wash station will suffice)?	✓			
First aid supplies available (weekly inspection of first aid kit will suffice)?	✓			
Communication equipment readily available for emergencies?	✓			
Any reported accidents/incidents at this site? If so, were accident reporting procedures followed?		✓		
Air Monitoring				
Monitoring equipment specified in SSHP available and in working order? Air monitoring instrumentation for this site includes – check each if required/on site, note deficiencies in comments: • Combustible gas meter • Organic vapor analyzer • Contaminant specific analyzer for benzene (if total organic vapor concentrations exceed 0.5 ppm)	✓			Noise and Dust Available
Monitoring equipment calibrated and calibration records	✓			

Y = Satisfactory or Yes; N = Unsatisfactory or No, N/A = Not applicable

Rating	Y	N	N/A	Comments/Immediate Corrective Action[1]
available?				
Environmental and personnel monitoring performed as specified in SSHP?	✓		(✓)	
PPE				
Proper dermal protection worn by EA and subcontracted employees when handling/ contacting hazardous chemicals or contaminated environmental media?	✓			
Required PPE (hard hats, safety boots / shoes, eye protection with side shields, hearing protection) being worn by EA and subcontracted employees?	✓			
PPE inspection completed by SSHO?	✓			
Drill Rig Operations				
Daily rig inspection completed? Any equipment problems?			✓	
Drill rigs/elevated equipment maintaining minimum 10-ft distance from energized (50 kV) overhead power lines?			✓	
Investigation-derived Waste (IDW)				
Wastes properly staged, secured, and labeled at end of day?	✓			

Additional Comments:

Site Safety and Health Officer's Signature

10/31/17

Date

[1]If a deficiency is noted that cannot be immediately corrected, the SSHO will monitor the progress in correcting the deficiency and will document following:

- Date the deficiency was identified
- Description of the deficiency
- Name of the person responsible for correcting the deficiency
- Projected date of correction
- Actual date of correction.

HEALTH AND SAFETY ACTIVITY REPORT

Site: 106239 Conveyance Line Location: ABQ, NM

Weather Cond.: Partly Cloudy 60° Onsite Hours: From 0700 To 1530

Changes in PPE Levels[1]	Work Operations	Reasons for Change
None		

Site Safety and Health Plan Violations	Corrective Action Specified	Corrective Action Taken [2](yes/no)

Observations and Comments:

Completed by: _____ Date: 10/31/17
Site Health and Safety Supervisor

[1]Only SSHO may change PPE levels, using only criteria specified in APP/SSHP.
[2]If a deficiency is noted that cannot be immediately corrected, the SSHO will monitor the progress in correcting the deficiency and will document following:

- Date the deficiency was identified
- Description of the deficiency
- Name of the person responsible for correcting the deficiency
- Projected date of correction
- Actual date of correction.

From:	Curley, Tyler
To:	"Trent.Simpler@usace.army.mil"; "Amy.E.Sanchez@usace.army.mil"; "Carlos.F.Salazar@usace.army.mil"; "Linda.Dreeland@usace.army.mil"; "Mark.J.Phaneuf@usace.army.mil"
Cc:	Jercinovic, Devon; McKeage, Kevin; Morse, Earl; Bowman, Matthew
Subject:	Activity Report for KAFBk Well 106239 Conveyance Line Installation 1 November 2017
Date:	Wednesday, November 01, 2017 4:48:21 PM
Attachments:	Daily Field Activities Summary Report.pdf Photos 11-1-17.pdf

---

Issues Today Wednesday 1 November 2017:

- None

Resolution of Issues:

- None

Work Performed Today:

- Welded 160 linear feet of pipe from Sta 18+90 to Sta 20+50
- Trenched and installed the conveyance line and electrical conduits from Sta 11+90 to Sta-15+00
- Encased electrical conduits in concrete from Sta 11+90 to Sta 15+00
- Delivered the side walls of the wellhead vault
- Continued installation of the electrical rack

Installation Completion to Date: 26%

Work Planned for 2 Nov 2017:

- Welded 160 linear feet of pipe from Sta 18+90 to Sta 20+50
- Trenched and installed the conveyance line and electrical conduits from Sta 11+90 to Sta-15+00
- Encased electrical conduits in concrete from Sta 11+90 to Sta 15+00
- Delivered the side walls of the wellhead vault
- Continued installation of the electrical rack

Please let me know if you need additional information.

Tyler Curley, P.E.
EA Engineering, Science, and Technology, Inc., PBC
320 Gold Avenue, SW Suite 1300
Albuquerque, NM 87120
(505) 715-4422 work
(719) 688-9558 cell
tcurley@eaest.com

DAILY FIELD ACTIVITIES SUMMARY REPORT		
PROJECT NAME: KAFB Well 106239 Conveyance Line Installation		
Date: 11-1-17	Time Shift Beginning: 0700	Time Shift Ending:1510
Project Number: 62599DM01		Contract/Task Order No.:
Client: USACE		Report By: Tyler Curley
Contractor(s): RMCI		Project Manager: Devon Jercinovic
Design Manager:		Oversight Manager: Tyler Curley
Design Engineer: George Nemeth		Site Engineer: Tyler Curley
Weather: Sunny 70° F		Logbook Number: NA
Personnel Onsite:	**Name:**	**Reason for Being Onsite:**
EA	Tyler Curley Pete Ferrari	Construction/Safety Oversight Field Assistance
RMCI	Jerry Patton Ed Hyde Felipe Hernandez Robert BeBault Jesus Moya Marcos Torres Angel Castaneda George Ingram Lorenzo Tena	General Contractor
Wilson Electric	Britt Crooks Jaime Perez	Electrical Contractor
All American Precast	Colin Howard Joes Garcia	Vault Delivery (RMCI Sub)

Work Performed:

Planned Activities:

- Trenching and installation of the conveyance line and electrical conduits
- Continue welding HDPE pipe for conveyance line
- Continued installation of the electrical rack
- Move jersey barriers

Completed Activities:

- Welded 160 linear feet of pipe from Sta 18+90 to Sta 20+50
- Trenched and installed the conveyance line and electrical conduits from Sta 11+90 to Sta-15+00
- Encased electrical conduits in concrete from Sta 11+90 to Sta 15+00
- Delivered the side walls of the wellhead vault
- Continued installation of the electrical rack

Material Deliveries:

- Side walls of the wellhead vault

Construction Quality Control Activities or Samples Collected:

- None

Observations or Possible Variations from Specifications:

- None

Anticipated Activities for the Following Day:	
• Backfill and compaction • Continue welding HDPE pipe for conveyance line • Move jersey barriers • Continued installation of the electrical rack **Planned Material Deliveries:** • Wellhead vault deliveries	
Contractor Reports, Manifests, Documents Reviewed and Logged:	
None	
Report Completed By:	
Tyler Curley	Date: 1 November 2017

EA Engineering, Science, and Technology, Inc

Employee/Visitor Register and Safety Brief				
Date: 11-1-17				
Site Entry/Exit		Name (Printed)	Signature	Company
Time In	Time Out			
0700	1510	Tyler Curley		EA
7:00		George INgram		RMCI
7:00		Robert DeBault	~~Robert DeBault~~	RMCI
7:00		Felipe Hernandez		RMCI
7:00		Angel Castaneda	Angel Castaneda	RMCI
7:00		Jesus Moya		RMCI
7:00		Jerry Patton		RMCI
7:00		Lorenzo Tena	Lorenzo Tena	RMCI
7:00		Marcos Torres		RMCI
7:00	↓	~~ED Hyde~~		RMCI
0912	1000	Pete Ferraro		EA
7:00	1500	Jaime Trevino Perez		Wilson Electric
11:00	11:15	Joel Garcia		AHPI
11:00	11:15	Colin Howard	CCIA	All American precast (APPT)
7:00	1500	Britt Crooks		WILSON

ENVIRONMENTAL MONITORING RECORD

SITE: KAFB-106239 Conveyance Line Installation

PROJECT NO.: 62599DM01

INSTRUMENT: Noise Pro Series / Thermo Dust Monitor

Time	Monitoring Location	Reading	Corrective Action Taken[a]
0915	Calibration	113.8dBA / 0.000 mg/m³	
0925	sta 19 + 00	76.1 / 0.006	
0928	sta 20 + 00	73.4 / 0.013	
1411	sta 12 + 00	70.4 / 0.031	
1414	sta 12 + 76	68.5 / 0.014	

Comments: N = North, E = East, S = South, W = West

(a) Corrective actions taken must be documented whenever readings at or above action levels are reached. Monitoring equipment and action levels are specified in Section 9.33 of the Accident Prevention Plan.

Recorded By: _____ Date: 11/1/17

Site Health & Safety Officer

HEALTH AND SAFETY ACTIVITY REPORT

Site: KAFB Well 106239 Location: Ridgecrest Dr

Weather Cond.: _____ Onsite Hours: From 0700 To 1510

Changes in PPE Levels[1]	Work Operations	Reasons for Change
None		

Site Safety and Health Plan Violations	Corrective Action Specified	Corrective Action Taken [2](yes/no)
None		

Observations and Comments:
None

Completed by: Tyler Curley Date: 11-1-17
Site Health and Safety Supervisor

[1]Only SSHO may change PPE levels, using only criteria specified in APP/SSHP.
[2]If a deficiency is noted that cannot be immediately corrected, the SSHO will monitor the progress in correcting the deficiency and will document following:

- Date the deficiency was identified
- Description of the deficiency
- Name of the person responsible for correcting the deficiency
- Projected date of correction
- Actual date of correction.

EA ENGINEERING, SCIENCE AND TECHNOLOGY, INC.
SAFETY MEETING REPORT

Date: 11-1-17	**Time:** 0700	**Duration of meeting:** 10min	**Project #** 65599.0101
Location: KAFB Well 106239		**Task:** Conveyance Line Install	

Type of meeting: X **Daily** ____ **Weekly** ____ **Monthly** ____ **Other:**_____

Items/Issues discussed:

1. Crushing hazards
2. Traffic
3. Pedestrians onsite
4. Hot / Pinch points
5.

Attach minutes of safety meeting if taken.

Safety questions/issues raised:	Actions/Follow-up needed:
1. None	
2.	
3.	
4.	
5.	
6.	

Remarks: None

Meeting conducted by:
Tyler Curley

EA Engineering, Science, and Technology, Inc.

DAILY SAFETY INSPECTION CHECKLIST
(TO BE COMPLETED EACH DAY OF CONSTRUCTION OR HTRW SITE ACTIVITIES)

Site: KAFB Well 100239
Location: Ridgecrest Dr
Project No.: 00599 DM01
Client: USACE

Prepared by SSHO: Tyler Curley
Project Manager: Devon Jercinovic
Date: 11-1-17

Rating	Y	N	N/A	Comments/Immediate Corrective Action[1]
Accident Prevention Plan (APP) and Site Safety and Health Plan (SSHP) General Requirements				
Are there new onsite personnel? • Did they receive pre-entry briefing and are their names recorded in field logbook or daily log? • Was the USACE PM made aware of the new personnel. • Required training and medical surveillance documentation received (e.g., 40-hr, 8 hr, etc.)?		✓		
Did personnel sign in/out of site?	✓			
Daily tailgate safety meetings conducted and documented?	✓			
Were new activities performed today? Were hazards identified, discussed during the daily safety tailgate, and incorporated into revised APP/SSHP?		✓		
New materials brought on site? MSDSs available?		✓		
Exclusion (EZ), Contamination Reduction (CRZ), and Support Zones (SZ) delineated and enforced?	✓			
General housekeeping measures in place to prevent hazards?	✓			
Emergency Planning				
Were there any changes to emergency contact names, telephone numbers, or hospital? If so, were site personnel made aware and was information distributed/reposted.		✓		
Adequate safety equipment inventory available?	✓			
Fire extinguisher available (monthly inspection of extinguisher will suffice)	✓			
Eyewash station(s) functioning and in place (weekly inspection of eye wash station will suffice)?	✓			
First aid supplies available (weekly inspection of first aid kit will suffice)?	✓			
Communication equipment readily available for emergencies?	✓			
Any reported accidents/incidents at this site? If so, were accident reporting procedures followed?				
Air Monitoring				
Monitoring equipment specified in SSHP available and in working order? Air monitoring instrumentation for this site includes – check each if required/on site, note deficiencies in comments: • Combustible gas meter • Organic vapor analyzer • Contaminant specific analyzer for benzene (if total organic vapor concentrations exceed 0.5 ppm)	✓			
Monitoring equipment calibrated and calibration records	✓			

Y = Satisfactory or Yes; N = Unsatisfactory or No, N/A = Not applicable

Rating	Y	N	N/A	Comments/Immediate Corrective Action[1]
available?				
Environmental and personnel monitoring performed as specified in SSHP?	✓			
PPE				
Proper dermal protection worn by EA and subcontracted employees when handling/ contacting hazardous chemicals or contaminated environmental media?	✓			
Required PPE (hard hats, safety boots / shoes, eye protection with side shields, hearing protection) being worn by EA and subcontracted employees?	✓			
PPE inspection completed by SSHO?	✓			
Drill Rig Operations				
Daily rig inspection completed? Any equipment problems?	✓			
Drill rigs/elevated equipment maintaining minimum 10-ft distance from energized (50 kV) overhead power lines?	✓			
Investigation-derived Waste (IDW)				
Wastes properly staged, secured, and labeled at end of day?			✓	

Additional Comments:

Site Safety and Health Officer's Signature

11-1-17

Date

[1]If a deficiency is noted that cannot be immediately corrected, the SSHO will monitor the progress in correcting the deficiency and will document following:

- Date the deficiency was identified
- Description of the deficiency
- Name of the person responsible for correcting the deficiency
- Projected date of correction
- Actual date of correction.

From:	Curley, Tyler
To:	"Trent.Simpler@usace.army.mil"; "Amy.E.Sanchez@usace.army.mil"; "Carlos.F.Salazar@usace.army.mil"; "Linda.Dreeland@usace.army.mil"; "Mark.J.Phaneuf@usace.army.mil"
Cc:	Jercinovic, Devon; McKeage, Kevin; Morse, Earl; Bowman, Matthew
Subject:	Activity Report for KAFBk Well 106239 Conveyance Line Installation 2 November 2017
Date:	Thursday, November 02, 2017 5:14:04 PM
Attachments:	Photos 11-2-17.pdf Daily Field Activities Summary Report.pdf

---

Issues Today Thursday 2 November 2017:

- None

Resolution of Issues:

- None

Work Performed Today:

- Backfilled and compacted trenching from Sta 11+90 to Sta 14+50
- Welded 45° elbows for connection to the HDD bore under Ridgecrest Dr.
- Continued installation of the electrical rack
- Moved jersey barrier

Installation Completion to Date: 28%

Work Planned for 3 Nov 2017:

- Move jersey barriers
- Continue installation of the electrical rack

Please let me know if you need additional information.

Tyler Curley, P.E.
EA Engineering, Science, and Technology, Inc., PBC
320 Gold Avenue, SW Suite 1300
Albuquerque, NM 87120
(505) 715-4422 work
(719) 688-9558 cell
tcurley@eaest.com

DAILY FIELD ACTIVITIES SUMMARY REPORT		
PROJECT NAME: KAFB Well 106239 Conveyance Line Installation		
Date: 11-2-17	Time Shift Beginning: 0700	Time Shift Ending:1530
Project Number: 62599DM01		Contract/Task Order No.:
Client: USACE		Report By: Tyler Curley
Contractor(s): RMCI		Project Manager: Devon Jercinovic
Design Manager:		Oversight Manager: Tyler Curley
Design Engineer: George Nemeth		Site Engineer: Tyler Curley
Weather: Sunny 70° F		Logbook Number: NA
Personnel Onsite:	**Name:**	**Reason for Being Onsite:**
EA	Tyler Curley Pete Ferrari	Construction/Safety Oversight Field Assistance
RMCI	Jerry Patton Ed Hyde Felipe Hernandez Robert BeBault Jesus Moya Marcos Torres Angel Castaneda George Ingram Lorenzo Tena	General Contractor
Wilson Electric	Britt Crooks Jaime Perez	Electrical Contractor

Work Performed:

Planned Activities:

- Backfill and compaction
- Continue welding HDPE pipe for conveyance line
- Move jersey barriers
- Continued installation of the electrical rack

Completed Activities:

- Backfilled and compacted trenching from Sta 11+90 to Sta 14+50
- Welded 45° elbows for connection to the HDD bore under Ridgecrest Dr.
- Continued installation of the electrical rack
- Moved jersey barriers

Material Deliveries:

- None

Construction Quality Control Activities or Samples Collected:

- None

Observations or Possible Variations from Specifications:

- None

Anticipated Activities for the Following Day:	
• Move jersey barriers • Continue installation of the electrical rack **Planned Material Deliveries:** • None	
Contractor Reports, Manifests, Documents Reviewed and Logged:	
None	
Report Completed By:	
Tyler Curley	Date: 2 November 2017

WACK

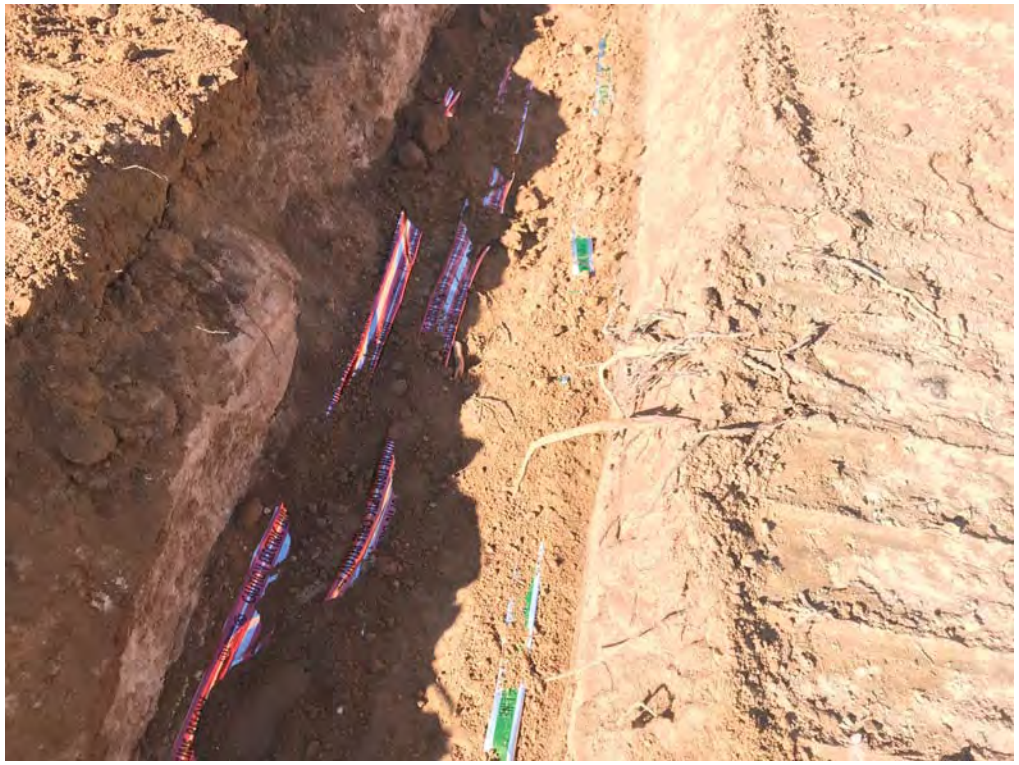

TOP
SIDE

EA Engineering, Science, and Technology, Inc

Employee/Visitor Register and Safety Brief

Date: 11-2-17

Site Entry/Exit		Name (Printed)	Signature	Company
Time In	Time Out			
0700	1400	Tyler Corbey		EA
0709	1530	Jesus Moya		RMCI
07:00		Felipe Hernandez		RMCI
7:00		George INGram		RMCI
700		Sarry Patton	Jay Pat	RMCI
7:00		Angel Castaneda	Angel Castaneda	RMCI
7:05		MARCOS TORRES		RMCI
7:06		Lorenzo Tena	Lorenzo Tena	RMCI
7:00		Robert BeBault	Robert BeBault	RMCI
700	↓	ED Hyde		RMCI
800	1500	Britt CROOKS	BC	WILSON
800	1500	Jaime Trevino Perez		wilson electric
1037	1400	Pete Ferrari	Pete Ferrari	EA
1400	1530	Peter Ferrari		

EA ENGINEERING, SCIENCE AND TECHNOLOGY, INC.
SAFETY MEETING REPORT

Date: 11-2-17	**Time:** 0700	**Duration of meeting:** 10	**Project #** 62599.01.M01
Location:		**Task:**	

Type of meeting: ____ Daily ____Weekly ____ Monthly ____ Other:_____

Items/Issues discussed:

1. Slips, trips, falls
2. Overhead utilities
3. Proper PPE
4. Traffic issues
5. Crush points near heavy equipment

Attach minutes of safety meeting if taken.

Safety questions/issues raised:	Actions/Follow-up needed:
1. None	
2.	
3.	
4.	
5.	
6.	

Remarks: None

Meeting conducted by:

Tyler Curley

EA Engineering, Science, and Technology, Inc.

DAILY SAFETY INSPECTION CHECKLIST
(TO BE COMPLETED EACH DAY OF CONSTRUCTION OR HTRW SITE ACTIVITIES)

Site: KAFB Well 106239
Location: Ridgecrest Dr.
Project No.: G025991.M01
Client: USACE

Prepared by SSHO: Tyler Curley
Project Manager: Devon Jercinovic
Date: 11-2-17

Rating	Y	N	N/A	Comments/Immediate Corrective Action[1]
Accident Prevention Plan (APP) and Site Safety and Health Plan (SSHP) General Requirements				
Are there new onsite personnel? • Did they receive pre-entry briefing and are their names recorded in field logbook or daily log? • Was the USACE PM made aware of the new personnel. • Required training and medical surveillance documentation received (e.g., 40-hr, 8 hr, etc.)?		✓		
Did personnel sign in/out of site?	✓			
Daily tailgate safety meetings conducted and documented?	✓			
Were new activities performed today? Were hazards identified, discussed during the daily safety tailgate, and incorporated into revised APP/SSHP?		✓		
New materials brought on site? MSDSs available?		✓		
Exclusion (EZ), Contamination Reduction (CRZ), and Support Zones (SZ) delineated and enforced?	✓			
General housekeeping measures in place to prevent hazards?	✓			
Emergency Planning				
Were there any changes to emergency contact names, telephone numbers, or hospital? If so, were site personnel made aware and was information distributed/reposted.		✓		
Adequate safety equipment inventory available?	✓			
Fire extinguisher available (monthly inspection of extinguisher will suffice)	✓			
Eyewash station(s) functioning and in place (weekly inspection of eye wash station will suffice)?	✓			
First aid supplies available (weekly inspection of first aid kit will suffice)?	✓			
Communication equipment readily available for emergencies?	✓			
Any reported accidents/incidents at this site? If so, were accident reporting procedures followed?	✓			
Air Monitoring				
Monitoring equipment specified in SSHP available and in working order? Air monitoring instrumentation for this site includes – check each if required/on site, note deficiencies in comments: • Combustible gas meter • Organic vapor analyzer • Contaminant specific analyzer for benzene (if total organic vapor concentrations exceed 0.5 ppm)	✓			
Monitoring equipment calibrated and calibration records	✓			

Y = Satisfactory or Yes; N = Unsatisfactory or No, N/A = Not applicable

Rating	Y	N	N/A	Comments/Immediate Corrective Action[1]
available?				
Environmental and personnel monitoring performed as specified in SSHP?	✓			
PPE				
Proper dermal protection worn by EA and subcontracted employees when handling/ contacting hazardous chemicals or contaminated environmental media?	✓			
Required PPE (hard hats, safety boots / shoes, eye protection with side shields, hearing protection) being worn by EA and subcontracted employees?	✓			
PPE inspection completed by SSHO?	✓			
Drill Rig Operations				
Daily rig inspection completed? Any equipment problems?	✓			
Drill rigs/elevated equipment maintaining minimum 10-ft distance from energized (50 kV) overhead power lines?	✓			
Investigation-derived Waste (IDW)				
Wastes properly staged, secured, and labeled at end of day?			✓	

Additional Comments:

Site Safety and Health Officer's Signature

11-2-17

Date

[1]If a deficiency is noted that cannot be immediately corrected, the SSHO will monitor the progress in correcting the deficiency and will document following:

- Date the deficiency was identified
- Description of the deficiency
- Name of the person responsible for correcting the deficiency
- Projected date of correction
- Actual date of correction.

HEALTH AND SAFETY ACTIVITY REPORT

Site: KAFB Well 106739 Location: Ridgecrest Dr

Weather Cond.: Sunny 70°F Onsite Hours: From 0700 To 1530

Changes in PPE Levels[1]	Work Operations	Reasons for Change

Site Safety and Health Plan Violations	Corrective Action Specified	Corrective Action Taken [2](yes/no)

Observations and Comments:

Completed by: _____ Date:
Site Health and Safety Supervisor

[1]Only SSHO may change PPE levels, using only criteria specified in APP/SSHP.
[2]If a deficiency is noted that cannot be immediately corrected, the SSHO will monitor the progress in correcting the deficiency and will document following:

- Date the deficiency was identified
- Description of the deficiency
- Name of the person responsible for correcting the deficiency
- Projected date of correction
- Actual date of correction.

ENVIRONMENTAL MONITORING RECORD

SITE: KAFB-106239 Conveyance Line Installation

PROJECT NO.: 62599DM01

INSTRUMENT: Noise Pro Series/Thermo dust monitor

Time	Monitoring Location	Reading	Corrective Action Taken[a]
1043	Calibration	113.9 DBA / 0.000 mg/m³	
10:45	~~Sta~~ 13 + 00	74.4 / 0.023	
10:50	sta 12 + 00	71.0 / 0.011	

Comments: N = North, E = East, S = South, W = West

(a) Corrective actions taken must be documented whenever readings at or above action levels are reached. Monitoring equipment and action levels are specified in Section 9.33 of the Accident Prevention Plan.

Recorded By: _____ Date: _____

Site Health & Safety Officer

From:	Curley, Tyler
To:	"Trent.Simpler@usace.army.mil"; "Amy.E.Sanchez@usace.army.mil"; "Carlos.F.Salazar@usace.army.mil"; "Linda.Dreeland@usace.army.mil"; "Mark.J.Phaneuf@usace.army.mil"
Cc:	Jercinovic, Devon; McKeage, Kevin; Morse, Earl; Bowman, Matthew
Subject:	Activity Report for KAFB Well 106239 Conveyance Line Installation 3 November 2017
Date:	Friday, November 03, 2017 7:01:03 PM
Attachments:	Daily Field Activities Summary Report.pdf Photos 11-3-17.pdf

---

Issues Today Friday 3 November 2017:

- RMCI hit a power pole with the front end loader while moving the jersey barriers. The damage to the power pole appeared to occur only to outer shell of weather material.

Resolution of Issues:

- PNM was contacted and a service inspection was performed. The PNM technician, Manual Chavez, inspected the power pole for structural integrity and determined that the damage was only cosmetic and the structural integrity of the power pole was not compromised.

Work Performed Today:

- Move jersey barriers
- Continued installation of the electrical rack

Installation Completion to Date: 30%

Work Planned for 6 Nov 2017:

- Continue trenching and conveyance line installation
- Continue installation of the electrical rack

Please let me know if you need additional information.

Tyler Curley, P.E.
EA Engineering, Science, and Technology, Inc., PBC
320 Gold Avenue, SW Suite 1300
Albuquerque, NM 87120
(505) 715-4422 work
(719) 688-9558 cell
tcurley@eaest.com

DAILY FIELD ACTIVITIES SUMMARY REPORT		
PROJECT NAME: KAFB Well 106239 Conveyance Line Installation		
Date: 11-3-17	Time Shift Beginning: 0700	Time Shift Ending:1420
Project Number: 62599DM01		Contract/Task Order No.:
Client: USACE		Report By: Tyler Curley
Contractor(s): RMCI		Project Manager: Devon Jercinovic
Design Manager:		Oversight Manager: Tyler Curley
Design Engineer: George Nemeth		Site Engineer: Tyler Curley
Weather: Sunny 70° F		Logbook Number: NA
Personnel Onsite:	**Name:**	**Reason for Being Onsite:**
EA	Tyler Curley	Construction/Safety Oversight
RMCI	Jerry Patton Ed Hyde Phillip Johnson Felipe Hernandez Robert BeBault Jesus Moya Angel Castaneda Lorenzo Tena	General Contractor
Wilson Electric	Britt Crooks Jaime Perez	Electrical Contractor

Work Performed:

Planned Activities:

- Move jersey barriers
- Continued installation of the electrical rack

Completed Activities:

- Move jersey barriers
- Continued installation of the electrical rack

Material Deliveries:

- None

Construction Quality Control Activities or Samples Collected:

- None

Observations or Possible Variations from Specifications:

- None

Anticipated Activities for the Following Day:

- Continue trenching and conveyance line installation
- Continue installation of the electrical rack

Planned Material Deliveries:

- None

Contractor Reports, Manifests, Documents Reviewed and Logged:	
None	
Report Completed By:	
Tyler Curley	Date: 3 November 2017

EA Engineering, Science, and Technology, Inc

Employee/Visitor Register and Safety Brief

Date: 1-3-17

Site Entry/Exit		Name (Printed)	Signature	Company
Time In	Time Out			
0700	1420	Tyler Curley		EA
7:00	1220	Lorenzo Tena	Lorenzo Tena	
7:00		Felipe Hernandez	Felipe Hernandez	RMCI
7:00		Robert BeBault	Robert BeBault	RMCI
7:00		Angel Castaneda	Angel Castaneda	RMCI
7:00	↓	Jesus Moya		RMCI
7:00	1330	⇔		RMCI
7.00	1400	Jerry Patton		RMCI
8:00	1420	Britt Crooks		Wilson
8:00	1420	Jaime Trevino Perez		wilson electric
12:40	1400	Phillip Johnson		RMCI, Inc.

EA ENGINEERING, SCIENCE AND TECHNOLOGY, INC.
SAFETY MEETING REPORT

Date: 11-3-17	**Time:** 0700	**Duration of meeting:** 10 min	**Project #** 62599DM01
Location: KAFB Well 106239		**Task:** Conveyance Line Install	

Type of meeting: X **Daily** ___ **Weekly** ___ **Monthly** ___ **Other:** _____

Items/Issues discussed:

1. Moving Equipment
2. ~~Pinch~~ Pinch points
3. crush points
4. Be attentative, think about work and not the weekend.
5.

Attach minutes of safety meeting if taken.

Safety questions/issues raised:	Actions/Follow-up needed:
1. None	
2.	
3.	
4.	
5.	
6.	

Remarks: None

Meeting conducted by:
Tyler Curley

EA Engineering, Science, and Technology, Inc.

DAILY SAFETY INSPECTION CHECKLIST
(TO BE COMPLETED EACH DAY OF CONSTRUCTION OR HTRW SITE ACTIVITIES)

Site: KAFB Well 106239
Location: Ridgecrest Dr.
Project No.: 62599 DM01
Client: USACE

Prepared by SSHO: Tyler Curley
Project Manager: Devon Jercinovic
Date: 11-3-17

Rating	Y	N	N/A	Comments/Immediate Corrective Action[1]
Accident Prevention Plan (APP) and Site Safety and Health Plan (SSHP) General Requirements				
Are there new onsite personnel? • Did they receive pre-entry briefing and are their names recorded in field logbook or daily log? • Was the USACE PM made aware of the new personnel. • Required training and medical surveillance documentation received (e.g., 40-hr, 8 hr, etc.)?		✓		
Did personnel sign in/out of site?	✓			
Daily tailgate safety meetings conducted and documented?	✓			
Were new activities performed today? Were hazards identified, discussed during the daily safety tailgate, and incorporated into revised APP/SSHP?		✓		
New materials brought on site? MSDSs available?		✓		
Exclusion (EZ), Contamination Reduction (CRZ), and Support Zones (SZ) delineated and enforced?	✓			
General housekeeping measures in place to prevent hazards?	✓			
Emergency Planning				
Were there any changes to emergency contact names, telephone numbers, or hospital? If so, were site personnel made aware and was information distributed/reposted.		✓		
Adequate safety equipment inventory available?	✓			
Fire extinguisher available (monthly inspection of extinguisher will suffice)	✓			
Eyewash station(s) functioning and in place (weekly inspection of eye wash station will suffice)?	✓			
First aid supplies available (weekly inspection of first aid kit will suffice)?	✓			
Communication equipment readily available for emergencies?	✓			
Any reported accidents/incidents at this site? If so, were accident reporting procedures followed?	✓			Hit power pole w/ Loader
Air Monitoring				
Monitoring equipment specified in SSHP available and in working order? Air monitoring instrumentation for this site includes – check each if required/on site, note deficiencies in comments: • Combustible gas meter • Organic vapor analyzer • Contaminant specific analyzer for benzene (if total organic vapor concentrations exceed 0.5 ppm)	✓			
Monitoring equipment calibrated and calibration records	✓			

Y = Satisfactory or Yes; N = Unsatisfactory or No, N/A = Not applicable

Rating	Y	N	N/A	Comments/Immediate Corrective Action[1]
available?				
Environmental and personnel monitoring performed as specified in SSHP?	✓			
PPE				
Proper dermal protection worn by EA and subcontracted employees when handling/ contacting hazardous chemicals or contaminated environmental media?	✓			
Required PPE (hard hats, safety boots / shoes, eye protection with side shields, hearing protection) being worn by EA and subcontracted employees?	✓			
PPE inspection completed by SSHO?	✓			
Drill Rig Operations				
Daily rig inspection completed? Any equipment problems?	✓			
Drill rigs/elevated equipment maintaining minimum 10-ft distance from energized (50 kV) overhead power lines?	✓			
Investigation-derived Waste (IDW)				
Wastes properly staged, secured, and labeled at end of day?			✓	

Additional Comments:

See accident report regarding the power pole.

Site Safety and Health Officer's Signature

11-3-17

Date

[1]If a deficiency is noted that cannot be immediately corrected, the SSHO will monitor the progress in correcting the deficiency and will document following:

- Date the deficiency was identified
- Description of the deficiency
- Name of the person responsible for correcting the deficiency
- Projected date of correction
- Actual date of correction.

HEALTH AND SAFETY ACTIVITY REPORT

Site: KAFB Well 106239 Location: Ridgecrest

Weather Cond.: Sunny 70°F Onsite Hours: From 0700 To _____

Changes in PPE Levels[1]	Work Operations	Reasons for Change
None		

Site Safety and Health Plan Violations	Corrective Action Specified	Corrective Action Taken [2](yes/no)
None		

Observations and Comments:

None

Completed by: Tyler Curley Date: 1/3-17

Site Health and Safety Supervisor

[1]Only SSHO may change PPE levels, using only criteria specified in APP/SSHP.

[2]If a deficiency is noted that cannot be immediately corrected, the SSHO will monitor the progress in correcting the deficiency and will document following:

- Date the deficiency was identified
- Description of the deficiency
- Name of the person responsible for correcting the deficiency
- Projected date of correction
- Actual date of correction.

From:	Curley, Tyler
To:	"Trent.Simpler@usace.army.mil"; "Amy.E.Sanchez@usace.army.mil"; "Carlos.F.Salazar@usace.army.mil"; "Linda.Dreeland@usace.army.mil"; "Mark.J.Phaneuf@usace.army.mil"
Cc:	Jercinovic, Devon; McKeage, Kevin; Morse, Earl; Bowman, Matthew
Subject:	Activity Report for KAFB Well 106239 Conveyance Line Installation 6 November 2017
Date:	Monday, November 06, 2017 8:15:57 PM
Attachments:	Daily Field Activities Summary Report.pdf Photos 11-6-17.pdf

---

Issues Today Monday 6 November 2017:

- None

Resolution of Issues:m

- None

Work Performed Today:

- Trenched and installed conveyance line and electrical conduits from Sta 15+00 to Sta 18+00
- Capped electrical conduits with concrete from Sta 15+00 to Sta 18+00
- Prepped soil for backfill and compaction
- Removed temporary well vault
- Removed 16" surface casing from the well to allow for the vault floor to be installed over the well
- Continued installation of the electrical rack

Installation Completion to Date: 33%

Work Planned for 7 Nov 2017:

- Backfill and compaction
- Move jersey barriers
- Begin excavation around well head for vault installation

Please let me know if you need additional information.

Tyler Curley, P.E.
EA Engineering, Science, and Technology, Inc., PBC
320 Gold Avenue, SW Suite 1300
Albuquerque, NM 87120
(505) 715-4422 work
(719) 688-9558 cell
tcurley@eaest.com

DAILY FIELD ACTIVITIES SUMMARY REPORT		
PROJECT NAME: KAFB Well 106239 Conveyance Line Installation		
Date: 11-6-17	Time Shift Beginning: 0700	Time Shift Ending:1600
Project Number: 62599DM01		Contract/Task Order No.:
Client: USACE		Report By: Tyler Curley
Contractor(s): RMCI		Project Manager: Devon Jercinovic
Design Manager:		Oversight Manager: Tyler Curley
Design Engineer: George Nemeth		Site Engineer: Tyler Curley
Weather: Sunny 70° F		Logbook Number: NA
Personnel Onsite:	**Name:**	**Reason for Being Onsite:**
EA	Tyler Curley	Construction/Safety Oversight
USACE	Trent Simpler	Site Visit/Oversight
RMCI	Jerry Patton Ed Hyde Felipe Hernandez Robert BeBault Jesus Moya Angel Castaneda Lorenzo Tena George Ingram	General Contractor
Wilson Electric	Britt Crooks Jaime Perez	Electrical Contractor

Work Performed:

Planned Activities:

- Continue trenching and conveyance line installation
- Continue installation of the electrical rack

Completed Activities:

- Trenched and installed conveyance line and electrical conduits from Sta 15+00 to Sta 18+00
- Capped electrical conduits with concrete from Sta 15+00 to Sta 18+00
- Prepped soil for backfill and compaction
- Removed temporary well vault
- Removed 16” surface casing from the well to allow for the vault floor to be installed over the well
- Continued installation of the electrical rack

Material Deliveries:

- 3/8” crushed gravel for the well vault bedding

Construction Quality Control Activities or Samples Collected:

- None

Observations or Possible Variations from Specifications:

- None

Anticipated Activities for the Following Day:	
• Backfill and compaction • Move jersey barriers • Begin excavation around well head for vault installation **Planned Material Deliveries:** • None	
Contractor Reports, Manifests, Documents Reviewed and Logged:	
None	
Report Completed By:	
Tyler Curley	Date: 6 November 2017

EA Engineering, Science, and Technology, Inc

Employee/Visitor Register and Safety Brief

Date: 11-6-17

Site Entry/Exit		Name (Printed)	Signature	Company
Time In	Time Out			
0700	1600	Tyler Cuiley		EA
0700		Felipe Hernandez	Felipe Hernandez	RMCI
7:00		George INgram		RMCI
7:00		Jerry Patton		RMCI
700		[illegible] Hyde		RMCI
7:00		Lorenzo Tena	Lorenzo Tena	RMCI
7:00		Angel Castaneda	Angel Castaneda	RMCI
7:00		Robert BeBault		RMCI
7:00		Jesus Moya		RMCI
715		Britt Crooks		Wilson
7:00	↓	Adrian Gutierrez		Wilson
7:20	10:00	Charles Johnson		YJD
7:30	10:00	Earl Morse		EA
0920	09:40	Pete Ferrari		EA
1200	1205	T Simpkins		USACE

HEALTH AND SAFETY ACTIVITY REPORT

Site: KAFB Well 106239 Location: Ridgecrest Dr.

Weather Cond.: Sunny 70°F Onsite Hours: From 0700 To _____

Changes in PPE Levels[1]	Work Operations	Reasons for Change
None		

Site Safety and Health Plan Violations	Corrective Action Specified	Corrective Action Taken [2](yes/no)
None		

Observations and Comments:

None

Completed by: Tyler Curley Date: 11-6-17

Site Health and Safety Supervisor

[1]Only SSHO may change PPE levels, using only criteria specified in APP/SSHP.

[2]If a deficiency is noted that cannot be immediately corrected, the SSHO will monitor the progress in correcting the deficiency and will document following:

- Date the deficiency was identified
- Description of the deficiency
- Name of the person responsible for correcting the deficiency
- Projected date of correction
- Actual date of correction.

EA ENGINEERING, SCIENCE AND TECHNOLOGY, INC.
SAFETY MEETING REPORT

Date: 11-6-17	**Time:** 0700	**Duration of meeting:** 10 min	**Project #** 605991001
Location: ~~Ridgecrest Dr~~ 12 KAFB well IX-239		**Task:** Conveyance Line Install	

Type of meeting: X **Daily** ___ **Weekly** ___ **Monthly** ___ **Other:** _____

Items/Issues discussed:

1. Tight quarters + moving equipment.
2. Crushing hazards
3. Hot points w/ welders/torches
4. Traffic
5.

Attach minutes of safety meeting if taken.

Safety questions/issues raised:	Actions/Follow-up needed:
1. None	
2.	
3.	
4.	
5.	
6.	

Remarks: None

Meeting conducted by:
Tyler Curley

EA Engineering, Science, and Technology, Inc.

DAILY SAFETY INSPECTION CHECKLIST (TO BE COMPLETED EACH DAY OF CONSTRUCTION OR HTRW SITE ACTIVITIES)

Site: MAF3 Well 106739
Location: Ridgecrest Dr.
Project No.: 62599 D M01
Client: USACE

Prepared by SSHO: Tyler Corley
Project Manager: Devon Jercinovic
Date: 11-6-17

Rating	Y	N	N/A	Comments/Immediate Corrective Action[1]
Accident Prevention Plan (APP) and Site Safety and Health Plan (SSHP) General Requirements				
Are there new onsite personnel? • Did they receive pre-entry briefing and are their names recorded in field logbook or daily log? • Was the USACE PM made aware of the new personnel. • Required training and medical surveillance documentation received (e.g., 40-hr, 8 hr, etc.)?	✓			
Did personnel sign in/out of site?	✓			
Daily tailgate safety meetings conducted and documented?	✓			
Were new activities performed today? Were hazards identified, discussed during the daily safety tailgate, and incorporated into revised APP/SSHP?		✓		
New materials brought on site? MSDSs available?		✓		
Exclusion (EZ), Contamination Reduction (CRZ), and Support Zones (SZ) delineated and enforced?	✓			
General housekeeping measures in place to prevent hazards?	✓			
Emergency Planning				
Were there any changes to emergency contact names, telephone numbers, or hospital? If so, were site personnel made aware and was information distributed/reposted.		✓		
Adequate safety equipment inventory available?	✓			
Fire extinguisher available (monthly inspection of extinguisher will suffice)	✓			
Eyewash station(s) functioning and in place (weekly inspection of eye wash station will suffice)?	✓			
First aid supplies available (weekly inspection of first aid kit will suffice)?	✓			
Communication equipment readily available for emergencies?	✓			
Any reported accidents/incidents at this site? If so, were accident reporting procedures followed?				
Air Monitoring				
Monitoring equipment specified in SSHP available and in working order? Air monitoring instrumentation for this site includes – check each if required/on site, note deficiencies in comments: • Combustible gas meter • Organic vapor analyzer • Contaminant specific analyzer for benzene (if total organic vapor concentrations exceed 0.5 ppm)	✓			
Monitoring equipment calibrated and calibration records	✓			

Y = Satisfactory or Yes; N = Unsatisfactory or No, N/A = Not applicable

Rating	Y	N	N/A	Comments/Immediate Corrective Action[1]
available?	✓			
Environmental and personnel monitoring performed as specified in SSHP?	✓			
PPE				
Proper dermal protection worn by EA and subcontracted employees when handling/ contacting hazardous chemicals or contaminated environmental media?	✓			
Required PPE (hard hats, safety boots / shoes, eye protection with side shields, hearing protection) being worn by EA and subcontracted employees?	✓			
PPE inspection completed by SSHO?	✓			
Drill Rig Operations				
Daily rig inspection completed? Any equipment problems?	✓			
Drill rigs/elevated equipment maintaining minimum 10-ft distance from energized (50 kV) overhead power lines?	✓			
Investigation-derived Waste (IDW)				
Wastes properly staged, secured, and labeled at end of day?			✓	

Additional Comments:

Site Safety and Health Officer's Signature

11-Oct-17

Date

[1]If a deficiency is noted that cannot be immediately corrected, the SSHO will monitor the progress in correcting the deficiency and will document following:

- Date the deficiency was identified
- Description of the deficiency
- Name of the person responsible for correcting the deficiency
- Projected date of correction
- Actual date of correction.

ENVIRONMENTAL MONITORING RECORD

SITE: KAFB-106239 Conveyance Line Installation

PROJECT NO.: 62599DM01

INSTRUMENT: Noise Pro Series / Thermo Dust monitor

Time	Monitoring Location	Reading	Corrective Action Taken[a]
0925	Calibrate	114.0 dBA / 0.000 mg/m³	
0927	sta 15+00	65.3 / 0.006	
0929	sta 16+00	72.4 / 0.007	

Comments: N = North, E = East, S = South, W = West

(a) Corrective actions taken must be documented whenever readings at or above action levels are reached. Monitoring equipment and action levels are specified in Section 9.33 of the Accident Prevention Plan.

Recorded By: _____ Date: _____

Site Health & Safety Officer

From:	Curley, Tyler
To:	"Trent.Simpler@usace.army.mil"; "Amy.E.Sanchez@usace.army.mil"; "Carlos.F.Salazar@usace.army.mil"; "Linda.Dreeland@usace.army.mil"; "Mark.J.Phaneuf@usace.army.mil"
Cc:	Jercinovic, Devon; McKeage, Kevin; Morse, Earl; Bowman, Matthew
Subject:	Activity Report for KAFB Well 106239 Conveyance Line Installation 7 November 2017
Date:	Tuesday, November 07, 2017 7:20:03 PM
Attachments:	017 COM Daily Report 07NOV17.pdf Daily Field Activities Summary Report.pdf Photos 11-7-17.pdf

---

Issues Today Tuesday 7 November 2017:

- The bituminous coating cannot be safely applied to under side of the vault floor as personnel would have to be staged under a suspended load

Resolution of Issues:

- The bituminous coating will be applied to all surface exterior wall with the exception of the bottom side of the vault floor.

Work Performed Today:

- Backfilled and compacted trench from Sta 15+00 to Sta 18+00
- Moved jersey barriers
- Excavated soil and compacted subgrade for the well head vault
- Applied bituminous coating to the well vault side walls
- Continued installation of the electrical rack

Installation Completion to Date: 36%

Work Planned for 8 Nov 2017:

- Trench and install conveyance line and electrical conduits
- Move jersey barriers
- Perform density testing
- Prep for well vault installation

Please let me know if you need additional information.

Tyler Curley, P.E.
EA Engineering, Science, and Technology, Inc., PBC
320 Gold Avenue, SW Suite 1300
Albuquerque, NM 87120
(505) 715-4422 work
(719) 688-9558 cell
tcurley@eaest.com

DAILY FIELD ACTIVITIES SUMMARY REPORT		
PROJECT NAME: KAFB Well 106239 Conveyance Line Installation		
Date: 11-7-17	Time Shift Beginning: 0630	Time Shift Ending:1500
Project Number: 62599DM01		Contract/Task Order No.:
Client: USACE		Report By: Tyler Curley
Contractor(s): RMCI		Project Manager: Devon Jercinovic
Design Manager:		Oversight Manager: Tyler Curley
Design Engineer: George Nemeth		Site Engineer: Tyler Curley
Weather: Sunny 65° F		Logbook Number: NA
Personnel Onsite:	**Name:**	**Reason for Being Onsite:**
EA	Tyler Curley Earl Morse Pete Ferrari	Construction/Safety Oversight Construction/Safety Oversight Field assistance
RMCI	Jerry Patton Ed Hyde Felipe Hernandez Robert BeBault Jesus Moya Angel Castaneda Lorenzo Tena George Ingram	General Contractor
Wilson Electric	Britt Crooks Adrian Gutierrez	Electrical Contractor

Work Performed:

Planned Activities:

- Backfill and compaction
- Move jersey barriers
- Begin excavation around well head for vault installation

Completed Activities:

- Backfilled and compacted trench from Sta 15+00 to Sta 18+00
- Moved jersey barriers
- Excavated soil and compacted subgrade for the well head vault
- Applied bituminous coating to the exterior of the vault side walls
- Continued installation of the electrical rack

Material Deliveries:

- None

Construction Quality Control Activities or Samples Collected:

- None

Observations or Possible Variations from Specifications:

- None

Anticipated Activities for the Following Day:	
• Trench and install conveyance line and electrical conduits • Move jersey barriers • Perform density testing • Prep for well vault installation **Planned Material Deliveries:** • None	
Contractor Reports, Manifests, Documents Reviewed and Logged:	
None	
Report Completed By:	
Tyler Curley	Date: 7 November 2017

CAUTION FIBER OPTIC CABLE BELOW

DAILY REPORT

(ATTACH ADDITIONAL SHEETS IF NECESSARY)

CONTRACT NAME:	Kirtland AFB Bulk Fuels Facility Expansion of Dissolved Plume GWTS Design	REPORT NO:	017
CONTRACT NUMBER:	W912DR-12-D-0006	REPORT DATE:	07NOV17
REVISION NUMBER:	-	REVISION DATE:	-
TASK ORDER NUMBER:	DM01	PROJECT NAME / LOCATION:	Kirtland BFF
PROJECT NUMBER:	62599DM01	PROJECT DESCRIPTION:	Installation of KAFB-106239 Conveyance Line
PROJECT MANAGER:	Devon Jercinovic	FIELD QUALITY MANAGER:	Kevin McKenzie
CONSTRUCTION MANAGER:	Tyler Curley	SITE SAFETY MANAGER:	Earl Morse

AM WEATHER:	Cloudy Cool	PM WEATHER:	Cloudy Cool	MAX TEMP (F):	68		

SUMMARY OF WORK PERFORMED TODAY

CQM Inspection of Bedding Gravel for KAFB-106233 Vault

HEALTH AND SAFETY REPORT

SAFETY ACTIONS TAKEN TODAY/SAFETY INSPECTIONS CONDUCTED (Include Observations, Safety Violations, Corrective Instructions Given, Corrective Actions Taken, and Results of Safety Inspections Conducted:

See Construction Manager's Daily Report

TAILGATE TOPICS:

"

SAFE BEHAVIOR OBSERVATIONS/SELF-ASSESSMENTS:

"

OPERATIONS/PRODUCTION REPORT

WORK FORCE – CONTRACTOR AND SUBCONTRACTOR

Company	Cumulative Total of Work Hours From Previous Report	Total Hours Today	Total Work Hours From Start of Injection Event
See CM's Daily Report			

EQUIPMENT ON HAND

Description of Equipment	Make/Model/ Manufacturer	Equipment ID Number	Inspection Performed By
Water Truck	Colorado Kenworth	4610	Robert Bobanit
Excavator	Volvo L-120	2310	Jesus Moya
Loader	Komatsu PC200	1107	Jesus Moya
HDPE Welder	McElroy Tracster	8617	Jerry Patton
HDPE Welder	McElroy Tracster	8618	Not in use
Backhoe	John Deere 310SJ	1415	Jesus Moya

COMMENTS (acceptance status, inspection findings, etc.):

OK

WORK AND/OR TESTS ACCOMPLISHED OR IN PROGRESS

Performed Work/Test for Today: See CM's Daily Report

Planned Work/Test for Tomorrow: "

Planned Work/Test for Next Week: "

CHANGED CONDITIONS/DELAY/CONFLICTS ENCOUNTERED (List any conflicts with the project [i.e., scope of work and/or drawings], delays to the project attributable to site and weather conditions, etc. "

VISITORS AND DISCUSSIONS: "

QUALITY CONTROL REPORT

MATERIALS DELIVERED TO JOB SITE

Quantity/Volume/ Weight	Description of Materials Received	Make/Model/ Manufacturer	Material Lot Number	Inspection Performed By
14 tons	3/8" Crushed Gravel.	Duke city Redimix	36098	TC

COMMENTS (acceptance status, inspection findings, etc.): Meets specifications

INSPECTIONS PERFORMED

Task/Activity Inspected	Inspection Performed	Findings
None		

TESTS PERFORMED

Task/Activity Tested	Test Performed	Test Results (Pass/Fail) - Criteria
None		

QUALITY ISSUES AND RESOLUTIONS: None

SUBMITTALS INSPECTION / REVIEW

Submittal No.	Submittal Description	Specification/Plan Reference	Submittal Approved?		Comment/Reason/Action
NA	Daily Report	_	Yes ☐	No ☐	Pending
NA	SBO	_	Yes ☐	No ☐	Pending
NA	PTSP	_	Yes ☐	No ☐	Pending

REGULATORY COMPLIANCE REPORT							
PERMIT INSPECTIONS PERFORMED: None							
WASTE ACCUMULATION/STOCKPILE AREA INSPECTION							
Inspection Performed By:	NA			Signature of Inspector:			
Accumulation / Stockpile Area Inspected:							
No of Bins:		No of Tankers		No of Roll-Off Boxes:		No. of Tanks	
Inspection Results: NA							
GENERAL COMMENTS							
General Comments: (rework, directives, etc.): Gravel meets specs.							
ATTACHMENTS							
List of Attachments: (examples, as applicable: submittals, meeting minutes, safety meeting minutes, COCs, weight tickets, manifests, profiles, rework item list, RFIs, DCNs, photographs, etc.): Photo log							
NOTE: Write all entries legibly in ink. Line out all unused portions or designate as "not applicable". Preparer signs first and last name on each completed daily report. This form may be filled out electronically and signed electronically.				PREPARER'S SIGNATURE		DATE 07Nov17	

Location: Station 2+00
Description: Crushed Gravel Stockpile
Date: 07 November 2017 Direction: West

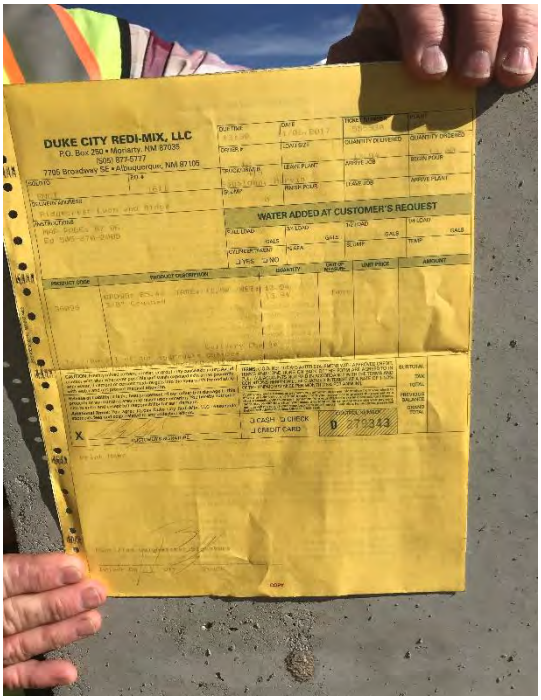

Location: Station 0+80
Description: Crushed Gravel Delivery Form (Formal copy to be submitted at a later date)
Date: 07 November 2017 Direction: East

EA Engineering, Science, and Technology, Inc

Employee/Visitor Register and Safety Brief

Date: 11-7-17

Site Entry/Exit		Name (Printed)	Signature	Company
Time In	Time Out			
0630		Tyler Curley		EA
630		George Ingram		RMCI
6:30		Lorenzo Tena	Lorenzo Tena	RMCI
6:30		Jesus Moya	Moya	RMCI
6:30		Robert Bebault	Bebault	RMCI
6:30		Angel Castaneda	Angel Castaneda	RMCI
6:30		Jerry Patton		RMCI
6:30		Felipe Hernandez	Felipe Hernandez	RMCI
6:30		ED Hyde		RMCI
7:30		Adrian Gutierrez		Wilson
730		Britt Crooks		Wilson
0830		Earl Morse		EA
1002		Pete Ferranti	Pete Ferranti	EA

EA ENGINEERING, SCIENCE AND TECHNOLOGY, INC.
SAFETY MEETING REPORT

Date: 11-7-17	**Time:** 0630	**Duration of meeting:** 10 min	**Project #** 65991.M01
Location: KAFB Well 106239		**Task:** Conveyance Line Install	

Type of meeting: _X_ Daily ___ Weekly ___ Monthly ___ Other:_____

Items/Issues discussed:

1. Slips/trips/falls
2. Proper PPE
3. Traffic (foot + vehicle)
4. Crossing utilities
5.

Attach minutes of safety meeting if taken.

Safety questions/issues raised:	Actions/Follow-up needed:
1. None	
2.	
3.	
4.	
5.	
6.	

Remarks: None

Meeting conducted by:
Tyler Curley

EA Engineering, Science, and Technology, Inc.

DAILY SAFETY INSPECTION CHECKLIST
(TO BE COMPLETED EACH DAY OF CONSTRUCTION OR HTRW SITE ACTIVITIES)

Site: KAFB Well 100239
Location: Ridgecrest Dr.
Project No.: 68699DM01
Client: USACE

Prepared by SSHO: Tyler Curley
Project Manager: Devon Jercinovic
Date: 11-7-17

Rating	Y	N	N/A	Comments/Immediate Corrective Action[1]
Accident Prevention Plan (APP) and Site Safety and Health Plan (SSHP) General Requirements				
Are there new onsite personnel? • Did they receive pre-entry briefing and are their names recorded in field logbook or daily log? • Was the USACE PM made aware of the new personnel. • Required training and medical surveillance documentation received (e.g., 40-hr, 8 hr, etc.)?		✓		
Did personnel sign in/out of site?	✓			
Daily tailgate safety meetings conducted and documented?	✓			
Were new activities performed today? Were hazards identified, discussed during the daily safety tailgate, and incorporated into revised APP/SSHP?		✓		
New materials brought on site? MSDSs available?		✓		
Exclusion (EZ), Contamination Reduction (CRZ), and Support Zones (SZ) delineated and enforced?	✓			
General housekeeping measures in place to prevent hazards?	✓			
Emergency Planning				
Were there any changes to emergency contact names, telephone numbers, or hospital? If so, were site personnel made aware and was information distributed/reposted.		✓		
Adequate safety equipment inventory available?	✓			
Fire extinguisher available (monthly inspection of extinguisher will suffice)	✓			
Eyewash station(s) functioning and in place (weekly inspection of eye wash station will suffice)?	✓			
First aid supplies available (weekly inspection of first aid kit will suffice)?	✓			
Communication equipment readily available for emergencies?	✓			
Any reported accidents/incidents at this site? If so, were accident reporting procedures followed?		✓		
Air Monitoring				
Monitoring equipment specified in SSHP available and in working order? Air monitoring instrumentation for this site includes – check each if required/on site, note deficiencies in comments: • Combustible gas meter • Organic vapor analyzer • Contaminant specific analyzer for benzene (if total organic vapor concentrations exceed 0.5 ppm)	✓			
Monitoring equipment calibrated and calibration records	✓			

Y = Satisfactory or Yes; N = Unsatisfactory or No, N/A = Not applicable

Rating	Y	N	N/A	Comments/Immediate Corrective Action[1]
available?				
Environmental and personnel monitoring performed as specified in SSHP?	✓			
PPE				
Proper dermal protection worn by EA and subcontracted employees when handling/ contacting hazardous chemicals or contaminated environmental media?	✓			
Required PPE (hard hats, safety boots / shoes, eye protection with side shields, hearing protection) being worn by EA and subcontracted employees?	✓			
PPE inspection completed by SSHO?	✓			
Drill Rig Operations				
Daily rig inspection completed? Any equipment problems?	✓			
Drill rigs/elevated equipment maintaining minimum 10-ft distance from energized (50 kV) overhead power lines?	✓			
Investigation-derived Waste (IDW)				
Wastes properly staged, secured, and labeled at end of day?			✓	

Additional Comments:

None

Site Safety and Health Officer's Signature

11-7-17

Date

[1]If a deficiency is noted that cannot be immediately corrected, the SSHO will monitor the progress in correcting the deficiency and will document following:

- Date the deficiency was identified
- Description of the deficiency
- Name of the person responsible for correcting the deficiency
- Projected date of correction
- Actual date of correction.

HEALTH AND SAFETY ACTIVITY REPORT

Site: KAFB Well 10G739 Location: Ridgecrest

Weather Cond.: Sunny 65° Onsite Hours: From 0630 To 1500

Changes in PPE Levels[1]	Work Operations	Reasons for Change
None		

Site Safety and Health Plan Violations	Corrective Action Specified	Corrective Action Taken [2](yes/no)
None		

Observations and Comments:
None

Completed by: Tyler Curley Date: 11-7-17
Site Health and Safety Supervisor

[1]Only SSHO may change PPE levels, using only criteria specified in APP/SSHP.
[2]If a deficiency is noted that cannot be immediately corrected, the SSHO will monitor the progress in correcting the deficiency and will document following:

- Date the deficiency was identified
- Description of the deficiency
- Name of the person responsible for correcting the deficiency
- Projected date of correction
- Actual date of correction.

ENVIRONMENTAL MONITORING RECORD

SITE: KAFB-106239 Conveyance Line Installation

PROJECT NO.: 62599DM01

INSTRUMENT: Noise Pro series / Thermo dust monitor

Time	Monitoring Location	Reading	Corrective Action Taken[a]
1005	calibrate	113.9 dBA / 0.000 mg/m³	
10:12	sta 15 + 00	75.8 / 0.002	
10:18	sta 16 + 00	75.6 / 0.017	

Comments: N = North, E = East, S = South, W = West

(a) Corrective actions taken must be documented whenever readings at or above action levels are reached. Monitoring equipment and action levels are specified in Section 9.33 of the Accident Prevention Plan.

Recorded By: Pete Ferrari
Site Health & Safety Officer

Date: 11-7-17

From:	Curley, Tyler
To:	"Trent.Simpler@usace.army.mil"; "Amy.E.Sanchez@usace.army.mil"; "Carlos.F.Salazar@usace.army.mil"; "Linda.Dreeland@usace.army.mil"; "Mark.J.Phaneuf@usace.army.mil"
Cc:	Jercinovic, Devon; McKeage, Kevin; Morse, Earl; Bowman, Matthew
Subject:	Activity Report for KAFB Well 106239 Conveyance Line Installation 8 November 2017
Date:	Wednesday, November 08, 2017 5:34:07 PM
Attachments:	Daily Field Activities Summary Report.pdf Photos 11-8-17.pdf 018 CQM Daily Report 08NOV17.pdf

---

Issues Today Wednesday November 2017:

- None

Resolution of Issues:

- None

Work Performed Today:

- Trenched and installed conveyance line and electrical conduits from Sta 18+00 to Sta 20+50
- Capped electrical conduits with concrete from Sta 18+00 to Sta 18+20
- Moved jersey barrier
- Performed density testing for the vault subgrade (see CQM report)
- Applied bituminous coating to the exterior of the vault side walls
- Prepped excavation for vault placement
- Continued installation of the electrical rack

Installation Completion to Date: 38%

Work Planned for 9 Nov 2017:

- Backfill and compaction
- Wellhead vault installation
- Density testing

Please let me know if you need additional information.

Tyler Curley, P.E.
EA Engineering, Science, and Technology, Inc., PBC
320 Gold Avenue, SW Suite 1300
Albuquerque, NM 87120
(505) 715-4422 work
(719) 688-9558 cell
tcurley@eaest.com

DAILY FIELD ACTIVITIES SUMMARY REPORT		
PROJECT NAME: KAFB Well 106239 Conveyance Line Installation		
Date: 11-8-17	Time Shift Beginning: 0630	Time Shift Ending:1500
Project Number: 62599DM01		Contract/Task Order No.:
Client: USACE		Report By: Tyler Curley
Contractor(s): RMCI		Project Manager: Devon Jercinovic
Design Manager:		Oversight Manager: Tyler Curley
Design Engineer: George Nemeth		Site Engineer: Tyler Curley
Weather: Sunny 65° F		Logbook Number: NA
Personnel Onsite:	**Name:**	**Reason for Being Onsite:**
EA	Tyler Curley Earl Morse Kevin McKeage	Construction/Safety Oversight Construction/Safety Oversight CQM
RMCI	Jerry Patton Ed Hyde Felipe Hernandez Robert BeBault Jesus Moya Angel Castaneda Lorenzo Tena George Ingram	General Contractor
Wilson Electric	Britt Crooks Adrian Gutierrez	Electrical Contractor
All American Precast	Colin Howard Jesus Chinchillas	Vault delivery

Work Performed:

Planned Activities:

- Trench and install conveyance line and electrical conduits
- Move jersey barriers
- Perform density testing
- Prep for well vault installation

Completed Activities:

- Trenched and installed conveyance line and electrical conduits from Sta 18+00 to Sta 20+50
- Capped electrical conduits with concrete from Sta 18+00 to Sta 18+20
- Moved jersey barrier
- Performed density testing for the vault subgrade (see CQM report)
- Applied bituminous coating to the exterior of the vault side walls
- Prepped excavation for vault placement
- Continued installation of the electrical rack

Material Deliveries:

- Well head vault floor piece

Construction Quality Control Activities or Samples Collected:

• Material inspection and density testing
Observations or Possible Variations from Specifications: • None

Anticipated Activities for the Following Day:	
• Backfill and compaction • Wellhead vault installation • Density testing **Planned Material Deliveries:** • None	
Contractor Reports, Manifests, Documents Reviewed and Logged:	
None	
Report Completed By:	
Tyler Curley	Date: 8 November 2017

DAILY REPORT

(ATTACH ADDITIONAL SHEETS IF NECESSARY)

CONTRACT NAME:	Kirtland AFB Bulk Fuels Facility Expansion of Dissolved Plume GWTS Design	REPORT NO:	018
CONTRACT NUMBER:	W912DR-12-D-0006	REPORT DATE:	08NOV17
REVISION NUMBER:	-	REVISION DATE:	-
TASK ORDER NUMBER:	DM01	PROJECT NAME / LOCATION:	Kirtland BFF
PROJECT NUMBER:	62599DM01	PROJECT DESCRIPTION:	Installation of KAFB-106239 Conveyance Line
PROJECT MANAGER:	Devon Jercinovic	FIELD QUALITY MANAGER:	Kevin McGeorge
CONSTRUCTION MANAGER:	Tyler Curley	SITE SAFETY MANAGER:	Tyler Curley

AM WEATHER:	Clear Cool	PM WEATHER:	Clear Cool	MAX TEMP (F):	61		

SUMMARY OF WORK PERFORMED TODAY

CQM Inspection of Delivered Vault Components.

HEALTH AND SAFETY REPORT

SAFETY ACTIONS TAKEN TODAY/SAFETY INSPECTIONS CONDUCTED (Include Observations, Safety Violations, Corrective Instructions Given, Corrective Actions Taken, and Results of Safety Inspections Conducted:

See Construction Manager's Daily Report.

TAILGATE TOPICS:

"

SAFE BEHAVIOR OBSERVATIONS/SELF-ASSESSMENTS:

"

OPERATIONS/PRODUCTION REPORT

WORK FORCE – CONTRACTOR AND SUBCONTRACTOR

Company	Cumulative Total of Work Hours From Previous Report	Total Hours Today	Total Work Hours From Start of Injection Event
See CM Daily Report			

EQUIPMENT ON HAND

Description of Equipment	Make/Model/ Manufacturer	Equipment ID Number	Inspection Performed By
Water Truck	Colorado Kenworth	4610	Robert Beckwith
Excavator	Volvo L-120	2310	Jesus Moya
Loader	Komatsu PC-200	1107	Jesus Moya
HDPE Welder	McElroy Tracstar	8617	Jerry Patton
HDPE Welder	McElroy Tracstar	8618	Not in Use
Backhoe	John Deere 310SJ	1415	Jesus Moya

COMMENTS (acceptance status, inspection findings, etc.):

OK

WORK AND/OR TESTS ACCOMPLISHED OR IN PROGRESS

Performed Work/Test for Today: See CM's Daily Report

Planned Work/Test for Tomorrow: "

Planned Work/Test for Next Week: "

CHANGED CONDITIONS/DELAY/CONFLICTS ENCOUNTERED (List any conflicts with the project [i.e., scope of work and/or drawings], delays to the project attributable to site and weather conditions, etc. "

VISITORS AND DISCUSSIONS: "

QUALITY CONTROL REPORT

MATERIALS DELIVERED TO JOB SITE

Quantity/Volume/ Weight	Description of Materials Received	Make/Model/ Manufacturer	Material Lot Number	Inspection Performed By
3 pieces	Well Vault (Precast)	—	—	KM
2x5 gal	HLM 5000 Master Seal	BASF	—	KM

COMMENTS (acceptance status, inspection findings, etc.): OK

INSPECTIONS PERFORMED

Task/Activity Inspected	Inspection Performed	Findings
Vault Coating	Visual Inspection	OK

TESTS PERFORMED

Task/Activity Tested	Test Performed	Test Results (Pass/Fail) - Criteria
~~New~~ Subgrade Vault	Compaction / Moisture	Pass - 4' East of Vault 97.8% 13.3%
"	"	Pass - 10 East of Vault 96.7% 11.2%

QUALITY ISSUES AND RESOLUTIONS: None

SUBMITTALS INSPECTION / REVIEW

Submittal No.	Submittal Description	Specification/Plan Reference	Submittal Approved?		Comment/Reason/Action
NA	Daily Report	_	Yes ☐	No ☐	Pending
NA	SBO	_	Yes ☐	No ☐	Pending
NA	PTSP	_	Yes ☐	No ☐	Pending

REGULATORY COMPLIANCE REPORT							
PERMIT INSPECTIONS PERFORMED: None							
WASTE ACCUMULATION/STOCKPILE AREA INSPECTION							
Inspection Performed By:	NA			Signature of Inspector:			
Accumulation / Stockpile Area Inspected:							
No of Bins:		No of Tankers		No of Roll-Off Boxes:		No. of Tanks	
Inspection Results: NA							
GENERAL COMMENTS							
General Comments: (rework, directives, etc.): OK							
ATTACHMENTS							
List of Attachments: (examples, as applicable: submittals, meeting minutes, safety meeting minutes, COCs, weight tickets, manifests, profiles, rework item list, RFIs, DCNs, photographs, etc.): Photo log.							
NOTE: Write all entries legibly in ink. Line out all unused portions or designate as "not applicable". Preparer signs first and last name on each completed daily report. This form may be filled out electronically and signed electronically.				PREPARER'S SIGNATURE		DATE: 08 NOV 17	

Location: Station 0+80
Description: Top and Middle of Precast Vault
Date: 08 November 2017 Direction: East

Location: Station 0+80
Description: Top and Middle of Precast Vault
Date: 08 November 2017 Direction: East

Location: Station 0+80
Description: Bottom of Precast Vault
Date: 08 November 2017 Direction: North

Location: Field Trailer
Description: Hydrophobic Membrane Paint
Date: 08 November 2017 Direction: West

EA Engineering, Science, and Technology, Inc

Employee/Visitor Register and Safety Brief

Date: 11-8-17

Site Entry/Exit		Name (Printed)	Signature	Company
Time In	Time Out			
06:30	1500	Tyler Curley		EA
6:30		George Ingram		RMCI
6'30		Jesus Moya		RMCI
6:30		Robert Rebbett		RMCI
6:30		Lorenzo Tena		RMCI
6:30		Angel Castaneda		RMCI
6130		Felipe Hernandez		RMCI
6:30		ED Hyde		RMCI
6:30	↓	Jerry Patton		RMCI
0730	14:30	Evan Mann		EA
730	14:00	Britt Crooks		Wilson
7:00	14:00	Adrian Gutierrez		Wilson
12:30	17:45	Colin Howard		AAPC
12:30	17:45	Jesus Chinchillas		AAPC
1445	1500	Kevin McKeage		EA

EA ENGINEERING, SCIENCE AND TECHNOLOGY, INC.
SAFETY MEETING REPORT

Date: 11-8-17	**Time:** 0630	**Duration of meeting:** 10 min	**Project #** 605990M01
Location: ~~AFE~~ KAFB Well 106739		**Task:** Conveyance Line Install	

Type of meeting: X **Daily** ___ **Weekly** ___ **Monthly** ___ **Other:** _____

Items/Issues discussed:

1. Proper PPE
2. Crushing hazards
3. Hand digging to find utilities
4. Hospital routes
5.

Attach minutes of safety meeting if taken.

Safety questions/issues raised:	Actions/Follow-up needed:
1. None	
2.	
3.	
4.	
5.	
6.	

Remarks: None

Meeting conducted by:
Tyler Curley

EA Engineering, Science, and Technology, Inc.

DAILY SAFETY INSPECTION CHECKLIST (TO BE COMPLETED EACH DAY OF CONSTRUCTION OR HTRW SITE ACTIVITIES)

Site: KAFB Well 106239
Location: Ridgecrest Dr
Project No.: [illegible]
Client: USACE

Prepared by SSHO: Tyler Curley
Project Manager: Devon Jerdnovic
Date: 11-8-17

Rating	Y	N	N/A	Comments/Immediate Corrective Action[1]
Accident Prevention Plan (APP) and Site Safety and Health Plan (SSHP) General Requirements				
Are there new onsite personnel? • Did they receive pre-entry briefing and are their names recorded in field logbook or daily log? • Was the USACE PM made aware of the new personnel. • Required training and medical surveillance documentation received (e.g., 40-hr, 8 hr, etc.)?		✓		
Did personnel sign in/out of site?	✓			
Daily tailgate safety meetings conducted and documented?	✓			
Were new activities performed today? Were hazards identified, discussed during the daily safety tailgate, and incorporated into revised APP/SSHP?		✓		
New materials brought on site? MSDSs available?		✓		
Exclusion (EZ), Contamination Reduction (CRZ), and Support Zones (SZ) delineated and enforced?	✓			
General housekeeping measures in place to prevent hazards?	✓			
Emergency Planning				
Were there any changes to emergency contact names, telephone numbers, or hospital? If so, were site personnel made aware and was information distributed/reposted.		✓		
Adequate safety equipment inventory available?	✓			
Fire extinguisher available (monthly inspection of extinguisher will suffice)	✓			
Eyewash station(s) functioning and in place (weekly inspection of eye wash station will suffice)?	✓			
First aid supplies available (weekly inspection of first aid kit will suffice)?	✓			
Communication equipment readily available for emergencies?	✓			
Any reported accidents/incidents at this site? If so, were accident reporting procedures followed?		✓		
Air Monitoring				
Monitoring equipment specified in SSHP available and in working order? Air monitoring instrumentation for this site includes – check each if required/on site, note deficiencies in comments: • Combustible gas meter • Organic vapor analyzer • Contaminant specific analyzer for benzene (if total organic vapor concentrations exceed 0.5 ppm)	✓			
Monitoring equipment calibrated and calibration records	✓			

Y = Satisfactory or Yes; N = Unsatisfactory or No, N/A = Not applicable

Rating	Y	N	N/A	Comments/Immediate Corrective Action[1]
available?				
Environmental and personnel monitoring performed as specified in SSHP?	✓			
PPE				
Proper dermal protection worn by EA and subcontracted employees when handling/ contacting hazardous chemicals or contaminated environmental media?	✓			
Required PPE (hard hats, safety boots / shoes, eye protection with side shields, hearing protection) being worn by EA and subcontracted employees?	✓			
PPE inspection completed by SSHO?	✓			
Drill Rig Operations				
Daily rig inspection completed? Any equipment problems?	✓			
Drill rigs/elevated equipment maintaining minimum 10-ft distance from energized (50 kV) overhead power lines?	✓			
Investigation-derived Waste (IDW)				
Wastes properly staged, secured, and labeled at end of day?			✓	

Additional Comments:

None

Site Safety and Health Officer's Signature

11-8-17
Date

[1]If a deficiency is noted that cannot be immediately corrected, the SSHO will monitor the progress in correcting the deficiency and will document following:

- Date the deficiency was identified
- Description of the deficiency
- Name of the person responsible for correcting the deficiency
- Projected date of correction
- Actual date of correction.

HEALTH AND SAFETY ACTIVITY REPORT

Site: KAFB Well 106239 Location: Ridgecrest

Weather Cond.: Sunny 65°F Onsite Hours: From 0630 To 1500

Changes in PPE Levels[1]	Work Operations	Reasons for Change
None		

Site Safety and Health Plan Violations	Corrective Action Specified	Corrective Action Taken [2](yes/no)
None		

Observations and Comments:
None

Completed by: Tyler Curley Date: 11-8-17
Site Health and Safety Supervisor

[1]Only SSHO may change PPE levels, using only criteria specified in APP/SSHP.
[2]If a deficiency is noted that cannot be immediately corrected, the SSHO will monitor the progress in correcting the deficiency and will document following:

- Date the deficiency was identified
- Description of the deficiency
- Name of the person responsible for correcting the deficiency
- Projected date of correction
- Actual date of correction.

From:	Curley, Tyler
To:	"Trent.Simpler@usace.army.mil"; "Amy.E.Sanchez@usace.army.mil"; "Carlos.F.Salazar@usace.army.mil"; "Linda.Dreeland@usace.army.mil"; "Mark.J.Phaneuf@usace.army.mil"
Cc:	Jercinovic, Devon; McKeage, Kevin; Morse, Earl; Bowman, Matthew
Subject:	Activity Report for KAFB Well 106239 Conveyance Line Installation 9 November 2017
Date:	Thursday, November 09, 2017 6:49:05 PM
Attachments:	Daily Field Activities Summary Report.pdf Photos 11-9-17.pdf 019 CQM Daily Report 09NOV17.pdf Final Pre-Lift Plan 106239 Well Vault Install.pdf

---

Issues Today 9 Thursday November 2017:

- None

Resolution of Issues:

- None

Work Performed Today:

- Backfilled and compacted from Sta 18+00 to Sta 20+20
- Performed density testing at Sta 13+40 (see CQM report)
- Installed the well head vault
- Continued installation of the electrical rack
- Site clean up

Installation Completion to Date: 40%

Work Planned for 13 Nov 2017:

- Backfill and compaction of the well vault
- Weld conveyance line piping into the vault
- Connect piping to the HDD bore under Ridgecrest Dr.
- Density testing

Construction activities will not occur on 10 November 2017 due the observance of Veterans day. Please let me know if you need additional information.

Tyler Curley, P.E.
EA Engineering, Science, and Technology, Inc., PBC
320 Gold Avenue, SW Suite 1300
Albuquerque, NM 87120
(505) 715-4422 work
(719) 688-9558 cell
tcurley@eaest.com

DAILY FIELD ACTIVITIES SUMMARY REPORT		
PROJECT NAME: KAFB Well 106239 Conveyance Line Installation		
Date: 11-9-17	Time Shift Beginning: 0630	Time Shift Ending:1415
Project Number: 62599DM01		Contract/Task Order No.:
Client: USACE		Report By: Tyler Curley
Contractor(s): RMCI		Project Manager: Devon Jercinovic
Design Manager:		Oversight Manager: Tyler Curley
Design Engineer: George Nemeth		Site Engineer: Tyler Curley
Weather: Sunny 65° F		Logbook Number: NA
Personnel Onsite:	**Name:**	**Reason for Being Onsite:**
EA	Tyler Curley Earl Morse Kevin McKeage Pete Ferrari Ian MacFarlane	Construction/Safety Oversight Construction/Safety Oversight CQM Safety Oversight Site Visit
RMCI	Jerry Patton Ed Hyde Phillip Johnson Felipe Hernandez Robert BeBault Jesus Moya Angel Castaneda Lorenzo Tena George Ingram	General Contractor
Wilson Electric	Britt Crooks Adrian Gutierrez	Electrical Contractor
Crane Services	Howard Johnston Rob Pallium	Vault Installation

Work Performed:

Planned Activities:

- Backfill and compaction
- Wellhead vault installation
- Density testing

Completed Activities:

- Backfilled and compacted from Sta 18+00 to Sta 20+20
- Performed density testing at Sta 13+40 (see CQM report)
- Installed the well head vault
- Continued installation of the electrical rack
- Site clean up

Material Deliveries:

- None

Construction Quality Control Activities or Samples Collected:

- Density testing

Observations or Possible Variations from Specifications: • None

Anticipated Activities for the Following Day:	
• Backfill and compaction of the well vault • Weld conveyance line piping into the vault • Connect piping to the HDD bore under ridgecrest • Density testing **Planned Material Deliveries:** • None	
Contractor Reports, Manifests, Documents Reviewed and Logged:	
None	
Report Completed By:	
Tyler Curley	Date: 9 November 2017

OVERSIZE

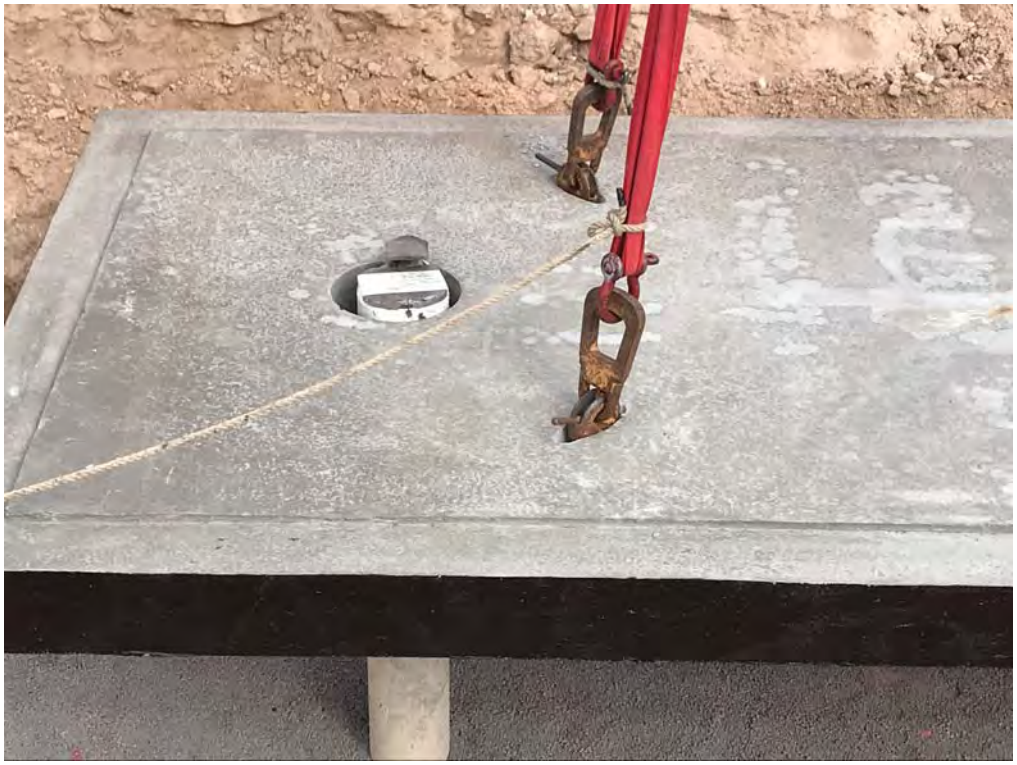

FORM 16-2

Standard Pre-Lift Plan (LHE)/Checklist

Date: 11-9-2017 Job #: AC-157662 Location: RIDGECREST EAST OF SAN PEDRO

Time: 10:00 AM Completed By (Competent Person): HOWARD FONTUS Z

Note: Applies to Cranes, Derricks, Hoists and Power-Operated equipment that can be used to hoist, lower and/or horizontally move a suspended load (includes excavators, forklifts, Rough Terrain equipment, etc., when used with rigging).

Crane Considerations		Yes	No
1	Are the lifts within the crane's rated capacities? (based on boom height, radius)	✓	
2	Boom deflections considered?	✓	
3	Have all potential crane boom obstructions been identified?	✓	
4	Have environmental considerations been addressed? (wind, weather, lightning)	✓	
5	Have electrical hazards been addressed (overhead /underground) - Clearance distances established? - Is a spotter required? - Public Utility contact required?	✓ ✓ ✓	 ✗ ✓
6	Crane swing radius properly barricaded and personnel advised of hazards?	✓	
	Comments:		

Crane Considerations		Yes	No
1	Weights and Centers of Gravity (COG) have been determined?	✓	
2	Anything inside/outside the loads that could shift during the lift?		✓
3	Does rigging need protection from the loads?		✓
4	All anchor bolts, hold-downs, or fasteners have been removed?	✓	
5	Potential for binding: are load cells required to verify the loads are free?		✓
6	Attachment points rated to take load weight?	✓	
7	Are the loads structurally capable of being lifted? (bending/twisting issues)	✓	
8	Is a Critical Lift Plan required per EM 385-1-1, Section 16.H?		✓
	Comments:		

Rigging		Yes	No
1	All rigging has been inspected by a Qualified Rigger?	✓	
2	Have sling angles been calculated?	✓	
3	Are shackles correctly sized for the sling eyes?	✓	
4	Are softeners needed?		✓
	Comments:		

Personnel		Yes	No
1	The roles, responsibilities and qualifications for personnel have been defined? (Operator, Lift Supervisor, Rigger, Signal Person)	✓	
2	A Pre-Lift meeting has been conducted?	✓	
3	Personnel trained per the EM?	✓	
	Comments:		

Area Preparation		Yes	No
1	The locations for the load landings has been selected and prepared?	✓	
2	Blocking and/or cribbing available to set the loads on?	N/A	
3	Travel paths have been determined and cordoned off?	✓	
4	Other personnel in the area have been notified of the lifts?	✓	
5	Have ground bearing support questions been addressed?	✓	
	Comments:		

Crane Operator: _____ Date: 11/9/17

Rigger(s): _____ Date: 11/9/17

Signal Person: _____ Date: 11/9/17

Other: _____ Date: 11-9-17

DAILY REPORT

(ATTACH ADDITIONAL SHEETS IF NECESSARY)

CONTRACT NAME:	Kirtland AFB Bulk Fuels Facility Expansion of Dissolved Plume GWTS Design	REPORT NO:	019
CONTRACT NUMBER:	W912DR-12-D-0006	REPORT DATE:	09NOV17
REVISION NUMBER:	-	REVISION DATE:	-
TASK ORDER NUMBER:	DM01	PROJECT NAME / LOCATION:	Kirtland BFF
PROJECT NUMBER:	62599DM01	PROJECT DESCRIPTION:	Installation of KAFB-106239 Conveyance Line
PROJECT MANAGER:	Devon Jercinovic	FIELD QUALITY MANAGER:	Kevin McKeage
CONSTRUCTION MANAGER:	Tyler Curley	SITE SAFETY MANAGER:	Earl Morse

AM WEATHER:	Clear Cold	PM WEATHER:	Clear Cool	MAX TEMP (F):	64		

SUMMARY OF WORK PERFORMED TODAY

CQM Inspection of Vault Install, Butyl Mastic Sealant, and Compaction Testing

HEALTH AND SAFETY REPORT

SAFETY ACTIONS TAKEN TODAY/SAFETY INSPECTIONS CONDUCTED (Include Observations, Safety Violations, Corrective Instructions Given, Corrective Actions Taken, and Results of Safety Inspections Conducted:

See Construction Manager's Daily Report.

TAILGATE TOPICS:

11

SAFE BEHAVIOR OBSERVATIONS/SELF-ASSESSMENTS:

11

OPERATIONS/PRODUCTION REPORT

WORK FORCE – CONTRACTOR AND SUBCONTRACTOR

Company	Cumulative Total of Work Hours From Previous Report	Total Hours Today	Total Work Hours From Start of Injection Event
See CM's Daily Report			

EQUIPMENT ON HAND

Description of Equipment	Make/Model/ Manufacturer	Equipment ID Number	Inspection Performed By
Water Truck	Colorado Kenworth	4610	Robert Beckwith
Excavator	Volvo L-120	2310	Jesus Moya
Loader	Komatsu PC 200	1107	Jesus Moya
HDPE Welder x2	McElroy Tracstar	8617, 8617	Jerry Patton
Backhoe	John Deere 310SJ	~~867~~ KA 1415	Jesus Moya
Crane	Terex 120 Ton.	5331	Howard Johnston

COMMENTS (acceptance status, inspection findings, etc.):

OK

WORK AND/OR TESTS ACCOMPLISHED OR IN PROGRESS

Performed Work/Test for Today: See Construction Managers Daily Report

Planned Work/Test for Tomorrow: "

Planned Work/Test for Next Week: "

CHANGED CONDITIONS/DELAY/CONFLICTS ENCOUNTERED (List any conflicts with the project [i.e., scope of work and/or drawings], delays to the project attributable to site and weather conditions, etc. "

VISITORS AND DISCUSSIONS: "

QUALITY CONTROL REPORT

MATERIALS DELIVERED TO JOB SITE

Quantity/Volume/ Weight	Description of Materials Received	Make/Model/ Manufacturer	Material Lot Number	Inspection Performed By
8 rolls	Butyl Mastic Sealant	Bido C-56	299166	KM

COMMENTS (acceptance status, inspection findings, etc.): Accepted.

INSPECTIONS PERFORMED

Task/Activity Inspected	Inspection Performed	Findings
Vault Installation	Visual Inspection	OK

TESTS PERFORMED

Task/Activity Tested	Test Performed	Test Results (Pass/Fail) - Criteria
Back fill	Compaction at 1320	Pass, 100%/13.2%, 100%/11.1%
"	"	100%/13.4%

QUALITY ISSUES AND RESOLUTIONS: None

SUBMITTALS INSPECTION / REVIEW

Submittal No.	Submittal Description	Specification/Plan Reference	Submittal Approved?		Comment/Reason/Action
NA	Daily Report	_	Yes ☐	No ☐	Pending
NA	SBO	_	Yes ☐	No ☐	Pending
NA	PTSP	_	Yes ☐	No ☐	Pending

REGULATORY COMPLIANCE REPORT							
PERMIT INSPECTIONS PERFORMED: None							
WASTE ACCUMULATION/STOCKPILE AREA INSPECTION							
Inspection Performed By:	NA			Signature of Inspector:			
Accumulation / Stockpile Area Inspected:							
No of Bins:		No of Tankers		No of Roll-Off Boxes:		No. of Tanks	
Inspection Results: NA							
GENERAL COMMENTS							
General Comments: (rework, directives, etc.): Materials Accepted, Install Accepted, Testing Passed.							
ATTACHMENTS							
List of Attachments: (examples, as applicable: submittals, meeting minutes, safety meeting minutes, COCs, weight tickets, manifests, profiles, rework item list, RFIs, DCNs, photographs, etc.): Photo log							
NOTE: Write all entries legibly in ink. Line out all unused portions or designate as "not applicable". Preparer signs first and last name on each completed daily report. This form may be filled out electronically and signed electronically.				PREPARER'S SIGNATURE		09NOV17 DATE	

Location: Station 13+20
Description: Compaction Testing
Date: 09 November 2017 Direction: Down

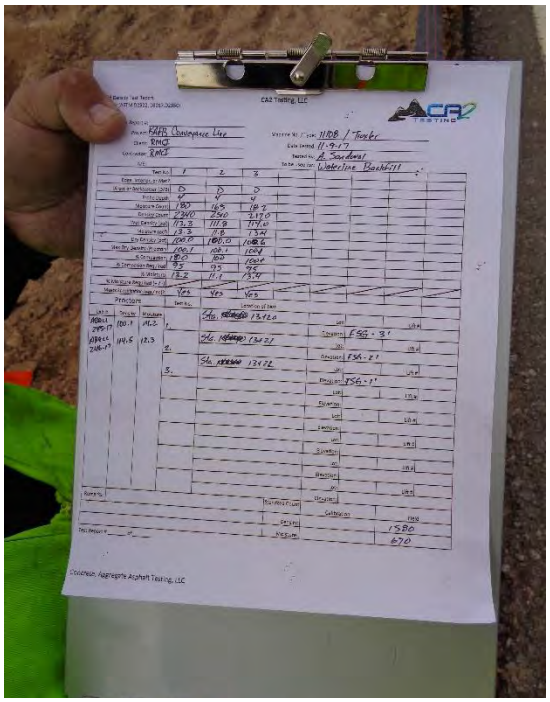

Location: Station 13+20
Description: Compaction Test Results (Formal copy to be submitted at a later date)
Date: 09 November 2017 Direction: Down

Location: Station 1+00
Description: Butyl Mastic Sealant
Date: 09 November 2017 Direction: Down

Location: Station 1+00
Description: Alignment of Vault during Installation.
Date: 09 November 2017 Direction: Down

EA Engineering, Science, and Technology, Inc

Employee/Visitor Register and Safety Brief				
Date: 11-9-17				
Site Entry/Exit		Name (Printed)	Signature	Company
Time In	Time Out			
0630	1419	Tyler Curley		EA
6:30		Jerry Patton		RMCI
6:30		Robert BeBault		RMCI
6:30		JESUS Moya		RMCI
6:30		Felipe Hernandez		RMCI
6:30		Angel Castaneda		RMCI
6:30		George INGRAM		RMCI
6:30		Lorenzo Tena		RMCI
630	↓	ED Hyde		RMCI
0945	1300	EAN Morse		EA
730	1415	Britt Crooks		Wilson
7:30	1415	Adrian Gutierrez		Wilson
9:35	1210	Kevin McKeage		EA
9:35	1130	IAN MACFARLANE		EA
9:50	1250	HOWARD JOHNSTON		CRANE SERVICE
9:50	1250	Rob Fullum		Crane Service
10:03	1210	Pete Ferrari		EA

EA Engineering, Science, and Technology, Inc

Employee/Visitor Register and Safety Brief				
Date:				
Site Entry/Exit		Name (Printed)	Signature	Company
Time In	Time Out			
17:45	1750	Phillip Johnson		RMCI

EA ENGINEERING, SCIENCE AND TECHNOLOGY, INC.
SAFETY MEETING REPORT

Date: 11-9-17	**Time:** 0630	**Duration of meeting:** 10 min	**Project #** 62599.04.01
Location: KAFB Well 106239		**Task:** Conveyance Line Install	

Type of meeting: _X_ **Daily** ___ **Weekly** ___ **Monthly** ___ **Other:**_____

Items/Issues discussed:

1. Crushing hazards
2. Traffic hazards
3. Pinch points
4. Crane safety
5.

Attach minutes of safety meeting if taken.

Safety questions/issues raised:	**Actions/Follow-up needed:**
1. None	
2.	
3.	
4.	
5.	
6.	

Remarks: None

Meeting conducted by:

Tyler Curley

EA Engineering, Science, and Technology, Inc.

DAILY SAFETY INSPECTION CHECKLIST (TO BE COMPLETED EACH DAY OF CONSTRUCTION OR HTRW SITE ACTIVITIES)

Site: KAFB Well 106239
Location: Ridgecrest DF
Project No.: 62599.DM01
Client: USACE

Prepared by SSHO: Tyler Curley
Project Manager: Devon Jercinovic
Date: 11-9-17

Rating	Y	N	N/A	Comments/Immediate Corrective Action[1]
Accident Prevention Plan (APP) and Site Safety and Health Plan (SSHP) General Requirements				
Are there new onsite personnel? • Did they receive pre-entry briefing and are their names recorded in field logbook or daily log? • Was the USACE PM made aware of the new personnel. • Required training and medical surveillance documentation received (e.g., 40-hr, 8 hr, etc.)?	✓			
Did personnel sign in/out of site?	✓			
Daily tailgate safety meetings conducted and documented?	✓			
Were new activities performed today? Were hazards identified, discussed during the daily safety tailgate, and incorporated into revised APP/SSHP?	✓			
New materials brought on site? MSDSs available?		✓		
Exclusion (EZ), Contamination Reduction (CRZ), and Support Zones (SZ) delineated and enforced?	✓			
General housekeeping measures in place to prevent hazards?	✓			
Emergency Planning				
Were there any changes to emergency contact names, telephone numbers, or hospital? If so, were site personnel made aware and was information distributed/reposted.		✓		
Adequate safety equipment inventory available?	✓			
Fire extinguisher available (monthly inspection of extinguisher will suffice)	✓			
Eyewash station(s) functioning and in place (weekly inspection of eye wash station will suffice)?	✓			
First aid supplies available (weekly inspection of first aid kit will suffice)?	✓			
Communication equipment readily available for emergencies?	✓			
Any reported accidents/incidents at this site? If so, were accident reporting procedures followed?		✓		
Air Monitoring				
Monitoring equipment specified in SSHP available and in working order? Air monitoring instrumentation for this site includes – check each if required/on site, note deficiencies in comments: • Combustible gas meter • Organic vapor analyzer • Contaminant specific analyzer for benzene (if total organic vapor concentrations exceed 0.5 ppm)	✓			
Monitoring equipment calibrated and calibration records	✓			

Y = Satisfactory or Yes; N = Unsatisfactory or No, N/A = Not applicable

Rating	Y	N	N/A	Comments/Immediate Corrective Action[1]
available?	✓			
Environmental and personnel monitoring performed as specified in SSHP?	✓			
PPE				
Proper dermal protection worn by EA and subcontracted employees when handling/ contacting hazardous chemicals or contaminated environmental media?	✓			
Required PPE (hard hats, safety boots / shoes, eye protection with side shields, hearing protection) being worn by EA and subcontracted employees?	✓			
PPE inspection completed by SSHO?	✓			
Drill Rig Operations				
Daily rig inspection completed? Any equipment problems?	✓			
Drill rigs/elevated equipment maintaining minimum 10-ft distance from energized (50 kV) overhead power lines?	✓			
Investigation-derived Waste (IDW)				
Wastes properly staged, secured, and labeled at end of day?			✓	

Additional Comments:

Site Safety and Health Officer's Signature

11-9-17

Date

[1]If a deficiency is noted that cannot be immediately corrected, the SSHO will monitor the progress in correcting the deficiency and will document following:

- Date the deficiency was identified
- Description of the deficiency
- Name of the person responsible for correcting the deficiency
- Projected date of correction
- Actual date of correction.

HEALTH AND SAFETY ACTIVITY REPORT

Site: KAFB Well 106739 Location: Ridgecrest Dr

Weather Cond.: Sunny 70°F Onsite Hours: From 0830 To 1415

Changes in PPE Levels[1]	Work Operations	Reasons for Change
None		

Site Safety and Health Plan Violations	Corrective Action Specified	Corrective Action Taken [2](yes/no)
None		

Observations and Comments:
None

Completed by: Tyler Curley Date: 11-9-17
Site Health and Safety Supervisor

[1]Only SSHO may change PPE levels, using only criteria specified in APP/SSHP.
[2]If a deficiency is noted that cannot be immediately corrected, the SSHO will monitor the progress in correcting the deficiency and will document following:

- Date the deficiency was identified
- Description of the deficiency
- Name of the person responsible for correcting the deficiency
- Projected date of correction
- Actual date of correction.

ENVIRONMENTAL MONITORING RECORD

SITE: KAFB-106239 Conveyance line install

PROJECT NO.: _____

INSTRUMENT: Noise Pro Series/Thermo dust monitor

Time	Monitoring Location	Reading	Corrective Action Taken[a]
1015	Calibrate	113.8dBA/0.000mg/m³	
1019	sta 19+00	73.8/0.004	
1022	sta 18+00	67.8/0.094	

Comments: _____

(a) Corrective actions taken must be documented whenever readings at or above action levels are reached. Monitoring equipment and action levels are specified in Section 9.33 of the Accident Prevention Plan.

Recorded By: _____ Date: _____

Site Health & Safety Officer

From:	Curley, Tyler
To:	"Trent.Simpler@usace.army.mil"; "Amy.E.Sanchez@usace.army.mil"; "Carlos.F.Salazar@usace.army.mil"; "Linda.Dreeland@usace.army.mil"; "Mark.J.Phaneuf@usace.army.mil"
Cc:	Jercinovic, Devon; McKeage, Kevin; Morse, Earl; Bowman, Matthew
Subject:	Activity Report for KAFB Well 106239 Conveyance Line Installation 13 November 2017
Date:	Monday, November 13, 2017 5:16:14 PM
Attachments:	Daily Field Activities Summary Report.pdf Photos 11-13-17.pdf 020 CQM Daily Report 13NOV17.pdf

---

Issues Today 13 Monday November 2017:

- Due to the 3-inch gravel feed tube located immediately next to the well, the link seal could not be installed between the well and the vault base

Resolution of Issues:

- The annular space between the well and the vault will be filled with a high strength , non-shrink grout

Work Performed Today:

- Welded conveyance piping into the well vault
- Surveyed the as-built conveyance line along the south side of Ridgecrest Dr.
- Delivered a grader to the site for surface grading
- Transported the excavator offsite
- Began backfilling the trench leading to the well vault
- Installed the Link Seal between the conveyance piping and the well vault
- Grouted the gap between the vault walls and the vault base

Installation Completion to Date: 41%

Work Planned for 14 Nov 2017:

- Drill vault penetrations and install the electrical conduits in the well vault
- Backfill and compaction of the well vault
- Connect piping to the HDD bore under Ridgecrest Dr

Please let me know if you need additional information.

Tyler Curley, P.E.
EA Engineering, Science, and Technology, Inc., PBC
320 Gold Avenue, SW Suite 1300
Albuquerque, NM 87120
(505) 715-4422 work
(719) 688-9558 cell
tcurley@eaest.com

DAILY FIELD ACTIVITIES SUMMARY REPORT		
PROJECT NAME: KAFB Well 106239 Conveyance Line Installation		
Date: 11-13-17	Time Shift Beginning: 0630	Time Shift Ending:1515
Project Number: 62599DM01		Contract/Task Order No.:
Client: USACE		Report By: Tyler Curley
Contractor(s): RMCI		Project Manager: Devon Jercinovic
Design Manager:		Oversight Manager: Tyler Curley
Design Engineer: George Nemeth		Site Engineer: Tyler Curley
Weather: Sunny 70° F		Logbook Number: NA
Personnel Onsite:	**Name:**	**Reason for Being Onsite:**
EA	Tyler Curley	Construction/Safety Oversight
RMCI	Jerry Patton Ed Hyde Phillip Johnson Felipe Hernandez Robert BeBault Jesus Moya Angel Castaneda Lorenzo Tena George Ingram	General Contractor
Wilson Electric	Britt Crooks Jaime Perex	Electrical Contractor
Terra Land Surveys	Carlos Medina Salvador Lazcano	Conveyance Line Survey

Work Performed:

Planned Activities:

- Backfill and compaction of the well vault
- Weld conveyance line piping into the vault
- Connect piping to the HDD bore under ridgecrest
- Density testing

Completed Activities:

- Welded conveyance piping into the well vault
- Surveyed the as-built conveyance line along the south side of Ridgecrest Dr.
- Delivered a grader to the site for surface grading
- Transported the excavator offsite
- Began backfilling the trench leading to the well vault
- Installed the Link Seal between the conveyance piping and the well vault
- Grouted the gap between the vault walls and the vault base

Material Deliveries:

- None

Construction Quality Control Activities or Samples Collected:

- Equipment inspection

Observations or Possible Variations from Specifications: • None

Anticipated Activities for the Following Day:	
• Drill vault penetrations and install the electrical conduits in the well vault • Backfill and compaction of the well vault • Connect piping to the HDD bore under Ridgecrest Dr **Planned Material Deliveries:** • None	
Contractor Reports, Manifests, Documents Reviewed and Logged:	
None	
Report Completed By:	
Tyler Curley	Date: 13 November 2017

PMCI
INC

DAILY REPORT

(ATTACH ADDITIONAL SHEETS IF NECESSARY)

CONTRACT NAME:	Kirtland AFB Bulk Fuels Facility Expansion of Dissolved Plume GWTS Design	REPORT NO:	020
CONTRACT NUMBER:	W912DR-12-D-0006	REPORT DATE:	13 NOV 17
REVISION NUMBER:	-	REVISION DATE:	-
TASK ORDER NUMBER:	DM01	PROJECT NAME / LOCATION:	Kirtland BFF
PROJECT NUMBER:	62599DM01	PROJECT DESCRIPTION:	Installation of KAFB-106239 Conveyance Line
PROJECT MANAGER:	Devon Jercinovic	FIELD QUALITY MANAGER:	Kevin McKeage
CONSTRUCTION MANAGER:	Tyler Curley	SITE SAFETY MANAGER:	Tyler Curley

AM WEATHER:	Cool Clear	PM WEATHER:	Warm Clear	MAX TEMP (F):	69		

SUMMARY OF WORK PERFORMED TODAY

CQM Inspection of Link Seal.

HEALTH AND SAFETY REPORT

SAFETY ACTIONS TAKEN TODAY/SAFETY INSPECTIONS CONDUCTED (Include Observations, Safety Violations, Corrective Instructions Given, Corrective Actions Taken, and Results of Safety Inspections Conducted:

See Construction Manager's Daily Report

TAILGATE TOPICS:

"

SAFE BEHAVIOR OBSERVATIONS/SELF-ASSESSMENTS:

"

OPERATIONS/PRODUCTION REPORT

WORK FORCE – CONTRACTOR AND SUBCONTRACTOR

Company	Cumulative Total of Work Hours From Previous Report	Total Hours Today	Total Work Hours From Start of Injection Event
See CM's Daily Report			

EQUIPMENT ON HAND

Description of Equipment	Make/Model/ Manufacturer	Equipment ID Number	Inspection Performed By
Water Truck	Colorado Kenworth	4610	Robert Robertson
Grader	John Deere 672G	5204	Jesus Moya
Loader	Komatsu PC200	1107	Jesus Moya
HDPE Welder x2	McElroy Tracstar	8617, 8618	Jerry Patton
Backhoe	John Deere 210SJ	1415	Jesus Moya

COMMENTS (acceptance status, inspection findings, etc.):

OK

WORK AND/OR TESTS ACCOMPLISHED OR IN PROGRESS

Performed Work/Test for Today: See CM's Daily Report

Planned Work/Test for Tomorrow: "

Planned Work/Test for Next Week: "

CHANGED CONDITIONS/DELAY/CONFLICTS ENCOUNTERED (List any conflicts with the project [i.e., scope of work and/or drawings], delays to the project attributable to site and weather conditions, etc. "

VISITORS AND DISCUSSIONS: "

QUALITY CONTROL REPORT

MATERIALS DELIVERED TO JOB SITE

Quantity/Volume/ Weight	Description of Materials Received	Make/Model/ Manufacturer	Material Lot Number	Inspection Performed By
1	Link Seal	L6-475	—	TC

COMMENTS (acceptance status, inspection findings, etc.): Meets Specifications

INSPECTIONS PERFORMED

Task/Activity Inspected	Inspection Performed	Findings
None		

TESTS PERFORMED

Task/Activity Tested	Test Performed	Test Results (Pass/Fail) - Criteria
None		

QUALITY ISSUES AND RESOLUTIONS: None

SUBMITTALS INSPECTION / REVIEW

Submittal No.	Submittal Description	Specification/Plan Reference	Submittal Approved?		Comment/Reason/Action
NA	Daily Report	–	Yes ☐	No ☐	Pending
NA	SBO	–	Yes ☐	No ☐	Pending
NA	PTSP	–	Yes ☐	No ☐	Pending

REGULATORY COMPLIANCE REPORT							
PERMIT INSPECTIONS PERFORMED: None							
WASTE ACCUMULATION/STOCKPILE AREA INSPECTION							
Inspection Performed By:	NA			Signature of Inspector:			
Accumulation / Stockpile Area Inspected:							
No of Bins:		No of Tankers		No of Roll-Off Boxes:		No. of Tanks	
Inspection Results: NA							
GENERAL COMMENTS							
General Comments: (rework, directives, etc.): OK							
ATTACHMENTS							
List of Attachments: (examples, as applicable: submittals, meeting minutes, safety meeting minutes, COCs, weight tickets, manifests, profiles, rework item list, RFIs, DCNs, photographs, etc.): Photo log							
NOTE: Write all entries legibly in ink. Line out all unused portions or designate as "not applicable". Preparer signs first and last name on each completed daily report. This form may be filled out electronically and signed electronically.				PREPARER'S SIGNATURE		DATE: 13NOV17	

Location: Station 1+00
Description: Link Seal
Date: 13 November 2017 Direction: Down

Location: Station 1+00
Description: Link Seal (During Installation)
Date: 13 November 2017 Direction: East

EA Engineering, Science, and Technology, Inc

Employee/Visitor Register and Safety Brief				
Date: 11 13-17				
Site Entry/Exit		Name (Printed)	Signature	Company
Time In	Time Out			
0630	1515	Tyler Curley		EA
0630	|	Felipe Hernandez	Felipe	RMCI
06:30	|	Jesus Moya	Moya	RMCI
06:30	|	Lorenzo Tena	Lorenzo Tena	RMCI
6:30	|	Angel Castaneda	Angel Castaneda	RMCI
6:30	|	Robert BeBout	Robert BeBout	RMCI
6:30	|	George INGRAM		RMCI
6:30	↓	ED HUDE		RMCI
7:00	1500	Jaime Tavira Perez		Wilson Electric
700	1500	Britt CROOKS		WILSON
8:30	1515	Jerry Patton	Jerry Patton	RMCI
8:30	1100	Carlos Medina		Terra land Surveys
8:30	1100	Salvador Lazcano		Terra land Surveys
8:30				
1100	1730	Monte Leiding	Monte Leiding	RMCI

EA ENGINEERING, SCIENCE AND TECHNOLOGY, INC.
SAFETY MEETING REPORT

Date: 11-13-17	**Time:** 0630	**Duration of meeting:** 10	**Project #** 62599.DM01
Location: KAFB Well 106239		**Task:** Conveyance Line Install	

Type of meeting: X **Daily** ___ **Weekly** ___ **Monthly** ___ **Other:** _____

Items/Issues discussed:

1. Slips / trips / falls
2. Crushing hazards
3. Hot points
4. Trenching safety
5.

Attach minutes of safety meeting if taken.

Safety questions/issues raised:	Actions/Follow-up needed:
1. None	
2.	
3.	
4.	
5.	
6.	

Remarks: None

Meeting conducted by:
Tyler Cutley

EA Engineering, Science, and Technology, Inc.

DAILY SAFETY INSPECTION CHECKLIST
(TO BE COMPLETED EACH DAY OF CONSTRUCTION OR HTRW SITE ACTIVITIES)

Site: KAFB Well 106239
Location: Ridge Crest Dr
Project No.: G0S99UM01
Client: USACE

Prepared by SSHO: Tyler Curley
Project Manager: Devon Jercinovic
Date: 11-13-17

Rating	Y	N	N/A	Comments/Immediate Corrective Action[1]
Accident Prevention Plan (APP) and Site Safety and Health Plan (SSHP) General Requirements				
Are there new onsite personnel? • Did they receive pre-entry briefing and are their names recorded in field logbook or daily log? • Was the USACE PM made aware of the new personnel. • Required training and medical surveillance documentation received (e.g., 40-hr, 8 hr, etc.)?		✓		
Did personnel sign in/out of site?	✓			
Daily tailgate safety meetings conducted and documented?	✓			
Were new activities performed today? Were hazards identified, discussed during the daily safety tailgate, and incorporated into revised APP/SSHP?		✓		
New materials brought on site? MSDSs available?		✓		
Exclusion (EZ), Contamination Reduction (CRZ), and Support Zones (SZ) delineated and enforced?	✓			
General housekeeping measures in place to prevent hazards?	✓			
Emergency Planning				
Were there any changes to emergency contact names, telephone numbers, or hospital? If so, were site personnel made aware and was information distributed/reposted.		✓		
Adequate safety equipment inventory available?	✓			
Fire extinguisher available (monthly inspection of extinguisher will suffice)				
Eyewash station(s) functioning and in place (weekly inspection of eye wash station will suffice)?	✓			
First aid supplies available (weekly inspection of first aid kit will suffice)?	✓			
Communication equipment readily available for emergencies?	✓			
Any reported accidents/incidents at this site? If so, were accident reporting procedures followed?		✓		
Air Monitoring				
Monitoring equipment specified in SSHP available and in working order? Air monitoring instrumentation for this site includes – check each if required/on site, note deficiencies in comments: • Combustible gas meter • Organic vapor analyzer • Contaminant specific analyzer for benzene (if total organic vapor concentrations exceed 0.5 ppm)	✓			
Monitoring equipment calibrated and calibration records				

Y = Satisfactory or Yes; N = Unsatisfactory or No, N/A = Not applicable

Rating	Y	N	N/A	Comments/Immediate Corrective Action[1]
available?	✓			
Environmental and personnel monitoring performed as specified in SSHP?	✓			
PPE				
Proper dermal protection worn by EA and subcontracted employees when handling/ contacting hazardous chemicals or contaminated environmental media?	✓			
Required PPE (hard hats, safety boots / shoes, eye protection with side shields, hearing protection) being worn by EA and subcontracted employees?	✓			
PPE inspection completed by SSHO?	✓			
Drill Rig Operations				
Daily rig inspection completed? Any equipment problems?	✓			
Drill rigs/elevated equipment maintaining minimum 10-ft distance from energized (50 kV) overhead power lines?	✓			
Investigation-derived Waste (IDW)				
Wastes properly staged, secured, and labeled at end of day?			✓	

Additional Comments:

Site Safety and Health Officer's Signature

11-13-17
Date

[1]If a deficiency is noted that cannot be immediately corrected, the SSHO will monitor the progress in correcting the deficiency and will document following:

- Date the deficiency was identified
- Description of the deficiency
- Name of the person responsible for correcting the deficiency
- Projected date of correction
- Actual date of correction.

HEALTH AND SAFETY ACTIVITY REPORT

Site: KAFB Well 106239 Location: Ridgecrest

Weather Cond.: _____ Onsite Hours: From 0630 To 1515

Changes in PPE Levels[1]	Work Operations	Reasons for Change
None		

Site Safety and Health Plan Violations	Corrective Action Specified	Corrective Action Taken [2](yes/no)
None		

Observations and Comments:

None

Completed by: Tyler Curley Date: 11-13-17

Site Health and Safety Supervisor

[1]Only SSHO may change PPE levels, using only criteria specified in APP/SSHP.

[2]If a deficiency is noted that cannot be immediately corrected, the SSHO will monitor the progress in correcting the deficiency and will document following:

- Date the deficiency was identified
- Description of the deficiency
- Name of the person responsible for correcting the deficiency
- Projected date of correction
- Actual date of correction.

From:	Curley, Tyler
To:	"Trent.Simpler@usace.army.mil"; "Amy.E.Sanchez@usace.army.mil"; "Carlos.F.Salazar@usace.army.mil"; "Linda.Dreeland@usace.army.mil"; "Mark.J.Phaneuf@usace.army.mil"
Cc:	Jercinovic, Devon; McKeage, Kevin; Morse, Earl; Bowman, Matthew
Subject:	Activity Report for KAFB Well 106239 Conveyance Line Installation 14 November 2017
Date:	Tuesday, November 14, 2017 6:06:51 PM
Attachments:	Daily Field Activities Summary Report.pdf Photos 11-14-17.pdf

---

Issues Today 14 Tuesday November 2017:

- None

Resolution of Issues:

- None

Work Performed Today:

- Drilled vault penetrations and installed the electrical conduits in the well vault
- Began backfill and compaction of the well vault
- Connected piping to the HDD bore under Ridgecrest
- Began surface grading on the south side of Ridgecrest

Installation Completion to Date: 42%

Work Planned for 15 Nov 2017:

- Complete backfill and compaction of the well vault
- Continue welding HDPE in the areas of the HDD borings on the North side of Ridgecrest

Please let me know if you need additional information.

Tyler Curley, P.E.
EA Engineering, Science, and Technology, Inc., PBC
320 Gold Avenue, SW Suite 1300
Albuquerque, NM 87120
(505) 715-4422 work
(719) 688-9558 cell
tcurley@eaest.com

DAILY FIELD ACTIVITIES SUMMARY REPORT		
PROJECT NAME: KAFB Well 106239 Conveyance Line Installation		
Date: 11-14-17	Time Shift Beginning: 0630	Time Shift Ending:1515
Project Number: 62599DM01		Contract/Task Order No.:
Client: USACE		Report By: Tyler Curley
Contractor(s): RMCI		Project Manager: Devon Jercinovic
Design Manager:		Oversight Manager: Tyler Curley
Design Engineer: George Nemeth		Site Engineer: Tyler Curley
Weather: Sunny 70° F		Logbook Number: NA
Personnel Onsite:	**Name:**	**Reason for Being Onsite:**
EA	Tyler Curley Pete Ferrari	Construction/Safety Oversight Safety Oversight
RMCI	Jerry Patton Ed Hyde Phillip Johnson Felipe Hernandez Robert BeBault Jesus Moya Angel Castaneda Lorenzo Tena George Ingram	General Contractor
Wilson Electric	Britt Crooks Jaime Perez	Electrical Contractor

Work Performed:

Planned Activities:

- Drill vault penetrations and install the electrical conduits in the well vault
- Backfill and compaction of the well vault
- Connect piping to the HDD bore under Ridgecrest

Completed Activities:

- Drilled vault penetrations and installed the electrical conduits in the well vault
- Began backfill and compaction of the well vault
- Connect piping to the HDD bore under Ridgecrest
- Began surface grading on the south side of Ridgecrest

Material Deliveries:

- None

Construction Quality Control Activities or Samples Collected:

- None

Observations or Possible Variations from Specifications:

- None

Anticipated Activities for the Following Day:	
• Complete backfill and compaction of the well vault • Continue welding HDPE in the areas of the HDD borings on the North side of Ridgecrest **Planned Material Deliveries:** • Junction vault	
Contractor Reports, Manifests, Documents Reviewed and Logged:	
None	
Report Completed By:	
Tyler Curley	Date: 14 November 2017

Wilson Electric

RMC

EA Engineering, Science, and Technology, Inc

Employee/Visitor Register and Safety Brief

Date: 11-14-17

Site Entry/Exit		Name (Printed)	Signature	Company
Time In	Time Out			
0630	1515	Tyler Curley		EA
6 30		ED Hyde		RMCI
6:30		George Ingram		RMCI
6:30		Angel Castaneda	Angel Castaneda	RMCJ
6:30		Lorenzo Tena	Lorenzo Tena	
6:30		Felipe Hernandez	Felipe Hernandez	RMCI
6:30		Robert BeBault	Bob BeBault	RMCI
6:30		Jesus Moya		RMCI
9:00	↓	Jerry Patton	Jerry Patton	RMCI
8:42	1200	Pete Ferrari	Pete Ferrari	EA
9:00	1145	Jaime Aguilar Perez		wilson electric
900	1145	Britt CROOKS		WILSON Electric
11:00	1200	Phillip Johnson		RMCI

EA ENGINEERING, SCIENCE AND TECHNOLOGY, INC.
SAFETY MEETING REPORT

Date: 11-14-17	**Time:** 0630	**Duration of meeting:** 60 min	**Project #** 62599.DM01
Location: KAFB Well 106739		**Task:** Conveyance Line Install	

Type of meeting: _X_ Daily ____Weekly ____ Monthly ____ Other:_____

Items/Issues discussed:

1. Crushing hazards
2. Trench safety
3. Traffic issues
4. Proper PPE
5.

Attach minutes of safety meeting if taken.

Safety questions/issues raised:	Actions/Follow-up needed:
1. None	
2.	
3.	
4.	
5.	
6.	

Remarks: None

Meeting conducted by:

Tyler Curley

EA Engineering, Science, and Technology, Inc.

DAILY SAFETY INSPECTION CHECKLIST
(TO BE COMPLETED EACH DAY OF CONSTRUCTION OR HTRW SITE ACTIVITIES)

Site: KAFB Well 100739
Location: Ridgecrest Dr
Project No.: 62599 DM01
Client: USACE

Prepared by SSHO: Tyler Curley
Project Manager: Devon Jerconovic
Date: 11-14-17

Rating	Y	N	N/A	Comments/Immediate Corrective Action[1]
Accident Prevention Plan (APP) and Site Safety and Health Plan (SSHP) General Requirements				
Are there new onsite personnel? • Did they receive pre-entry briefing and are their names recorded in field logbook or daily log? • Was the USACE PM made aware of the new personnel. • Required training and medical surveillance documentation received (e.g., 40-hr, 8 hr, etc.)?		X		
Did personnel sign in/out of site?	✓			
Daily tailgate safety meetings conducted and documented?	✓			
Were new activities performed today? Were hazards identified, discussed during the daily safety tailgate, and incorporated into revised APP/SSHP?		✓		
New materials brought on site? MSDSs available?		✓		
Exclusion (EZ), Contamination Reduction (CRZ), and Support Zones (SZ) delineated and enforced?	✓			
General housekeeping measures in place to prevent hazards?	✓			
Emergency Planning				
Were there any changes to emergency contact names, telephone numbers, or hospital? If so, were site personnel made aware and was information distributed/reposted.		✓		
Adequate safety equipment inventory available?	✓			
Fire extinguisher available (monthly inspection of extinguisher will suffice)	✓			
Eyewash station(s) functioning and in place (weekly inspection of eye wash station will suffice)?	✓			
First aid supplies available (weekly inspection of first aid kit will suffice)?	✓			
Communication equipment readily available for emergencies?	✓			
Any reported accidents/incidents at this site? If so, were accident reporting procedures followed?		✓		
Air Monitoring				
Monitoring equipment specified in SSHP available and in working order? Air monitoring instrumentation for this site includes – check each if required/on site, note deficiencies in comments: • Combustible gas meter • Organic vapor analyzer • Contaminant specific analyzer for benzene (if total organic vapor concentrations exceed 0.5 ppm)	✓			
Monitoring equipment calibrated and calibration records	✓			

Y = Satisfactory or Yes; N = Unsatisfactory or No, N/A = Not applicable

Rating	Y	N	N/A	Comments/Immediate Corrective Action[1]
available?				
Environmental and personnel monitoring performed as specified in SSHP?	✓			
PPE				
Proper dermal protection worn by EA and subcontracted employees when handling/ contacting hazardous chemicals or contaminated environmental media?	✓			
Required PPE (hard hats, safety boots / shoes, eye protection with side shields, hearing protection) being worn by EA and subcontracted employees?	✓			
PPE inspection completed by SSHO?	✓			
Drill Rig Operations				
Daily rig inspection completed? Any equipment problems?	✓			
Drill rigs/elevated equipment maintaining minimum 10-ft distance from energized (50 kV) overhead power lines?	✓			
Investigation-derived Waste (IDW)				
Wastes properly staged, secured, and labeled at end of day?			✓	

Additional Comments:

Site Safety and Health Officer's Signature

11-14-17

Date

[1]If a deficiency is noted that cannot be immediately corrected, the SSHO will monitor the progress in correcting the deficiency and will document following:

- Date the deficiency was identified
- Description of the deficiency
- Name of the person responsible for correcting the deficiency
- Projected date of correction
- Actual date of correction.

HEALTH AND SAFETY ACTIVITY REPORT

KAFB

Site: Well 106739 Location: Ridgecrest Dr

Weather Cond.: Sunny 72°F Onsite Hours: From 0630 To _____

Changes in PPE Levels[1]	Work Operations	Reasons for Change
None		

Site Safety and Health Plan Violations	Corrective Action Specified	Corrective Action Taken [2](yes/no)
None		

Observations and Comments:

None

Completed by: Tyler Curley Date: 11-14-17

Site Health and Safety Supervisor

[1]Only SSHO may change PPE levels, using only criteria specified in APP/SSHP.

[2]If a deficiency is noted that cannot be immediately corrected, the SSHO will monitor the progress in correcting the deficiency and will document following:

- Date the deficiency was identified
- Description of the deficiency
- Name of the person responsible for correcting the deficiency
- Projected date of correction
- Actual date of correction.

ENVIRONMENTAL MONITORING RECORD

SITE: KAFB-106239 Conveyance Line Install

PROJECT NO.: _____

INSTRUMENT: Noise Pro Series / Thermo dust monitor

Time	Monitoring Location	Reading	Corrective Action Taken[a]
0847	Calibrate	113.8 dBA / 0.000 mg/m³	
0850	sta 21 + 00	73.3 / 0.017	
0852	sta 22 + 00	65.8 / 0.018	

Comments: _____

(a) Corrective actions taken must be documented whenever readings at or above action levels are reached. Monitoring equipment and action levels are specified in Section 9.33 of the Accident Prevention Plan.

Recorded By: _____ Date: _____

Site Health & Safety Officer

From:	Curley, Tyler
To:	"Trent.Simpler@usace.army.mil"; "Amy.E.Sanchez@usace.army.mil"; "Carlos.F.Salazar@usace.army.mil"; "Linda.Dreeland@usace.army.mil"; "Mark.J.Phaneuf@usace.army.mil"
Cc:	Jercinovic, Devon; McKeage, Kevin; Morse, Earl; Bowman, Matthew
Subject:	Activity Report for KAFB Well 106239 Conveyance Line Installation 15 November 2017
Date:	Wednesday, November 15, 2017 9:32:47 PM
Attachments:	Daily Field Activities Summary Report.pdf Photos 11-15-17.pdf 021 CQM Daily Report 15NOV17.pdf

---

Issues Today 15 Wednesday November 2017:

- HDD under the gas line located at Sta 22+00 could not be performed due to clearance issues. As a result this portion of the conveyance line was installed by trenching (approximately 40 feet). The conveyance line and electrical conduits were installed within the same bore hole during HDD and thus could not be separated in the short trenching run between bore pits. Due to the close proximity of the conveyance line the concrete cap that was to be installed over the electrical conduits would encroach onto/over the conveyance line.

Resolution of Issues:

- The electrical conduits in this section of trench were not encased in concrete.

Work Performed Today:

- Completed backfill and compaction of the well vault
- Trenched under the gas line at Sta 22+00
- Welded conveyance piping between HDD bore location on the north side of Ridgecrest Dr.
- Began moving the electrical line for well 106228
- Moved wall barriers to the north side of Ridgecrest Dr.

Installation Completion to Date: 45%

Work Planned for 16 Nov 2017:

- Continue welding HDPE in the areas of the HDD borings on the North side of Ridgecrest

Please let me know if you need additional information.

Tyler Curley, P.E.
EA Engineering, Science, and Technology, Inc., PBC
320 Gold Avenue, SW Suite 1300
Albuquerque, NM 87120
(505) 715-4422 work
(719) 688-9558 cell
tcurley@eaest.com

DAILY FIELD ACTIVITIES SUMMARY REPORT		
PROJECT NAME: KAFB Well 106239 Conveyance Line Installation		
Date: 11-15-17	Time Shift Beginning: 0630	Time Shift Ending:1730
Project Number: 62599DM01		Contract/Task Order No.:
Client: USACE		Report By: Tyler Curley
Contractor(s): RMCI		Project Manager: Devon Jercinovic
Design Manager:		Oversight Manager: Tyler Curley
Design Engineer: George Nemeth		Site Engineer: Tyler Curley
Weather: Sunny 65° F		Logbook Number: NA
Personnel Onsite:	**Name:**	**Reason for Being Onsite:**
EA	Tyler Curley Pete Ferrari Earl Morse Kevin McKeage	Construction/Safety Oversight Safety Oversight Safety Oversight CQM
RMCI	Jerry Patton Ed Hyde Felipe Hernandez Robert BeBault Jesus Moya Angel Castaneda Lorenzo Tena George Ingram	General Contractor
Wilson Electric	Britt Crooks Jaime Perez	Electrical Contractor

Work Performed:

Planned Activities:

- Complete backfill and compaction of the well vault
- Continue welding HDPE in the areas of the HDD borings on the North side of Ridgecrest

Completed Activities:

- Completed backfill and compaction of the well vault
- Trenched under the gas line at Sta 22+00
- Welded conveyance piping between HDD bore location on the north side of Ridgecrest Dr.
- Began moving the electrical line for well 106228
- Moved wall barriers to the north side of Ridgecrest Dr.

Material Deliveries:

- Junction vault

Construction Quality Control Activities or Samples Collected:

- Material inspection

Observations or Possible Variations from Specifications:

- The conveyance line and electrical conduits were installed within the same bore hole during HDD and thus could not be separated in the short trenching run between bore pits. Due to the close proximity of the conveyance line, the electrical conduits were not capped with concrete to prevent encroachment of the concrete onto and over the conveyance line.

Anticipated Activities for the Following Day:	
• Continue welding HDPE in the areas of the HDD borings on the North side of Ridgecrest **Planned Material Deliveries:** • None	
Contractor Reports, Manifests, Documents Reviewed and Logged:	
• None	
Report Completed By:	
Tyler Curley	Date: 15 November 2017

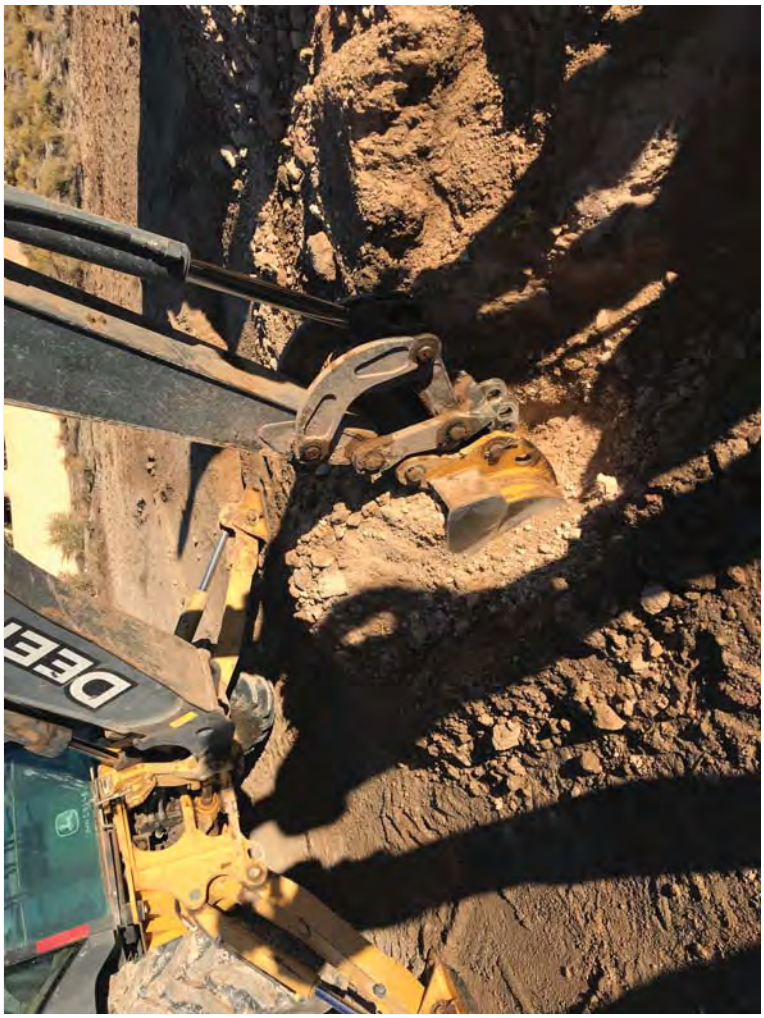

DAILY REPORT

(ATTACH ADDITIONAL SHEETS IF NECESSARY)

CONTRACT NAME:	Kirtland AFB Bulk Fuels Facility Expansion of Dissolved Plume GWTS Design	REPORT NO:	021
CONTRACT NUMBER:	W912DR-12-D-0006	REPORT DATE:	15 NOV 17
REVISION NUMBER:	-	REVISION DATE:	-
TASK ORDER NUMBER:	DM01	PROJECT NAME / LOCATION:	Kirtland BFF
PROJECT NUMBER:	62599DM01	PROJECT DESCRIPTION:	Installation of KAFB-106239 Conveyance Line
PROJECT MANAGER:	Devon Jercinovic	FIELD QUALITY MANAGER:	Kevin McKenzie
CONSTRUCTION MANAGER:	Tyler Curley	SITE SAFETY MANAGER:	Tyler Curley / Pete Ferrari

AM WEATHER:	Cool Clear	PM WEATHER:	Warm Clear	MAX TEMP (F):	66		

SUMMARY OF WORK PERFORMED TODAY

CQM Inspections of Reroute boxes and Junction Vault.

HEALTH AND SAFETY REPORT

SAFETY ACTIONS TAKEN TODAY/SAFETY INSPECTIONS CONDUCTED (Include Observations, Safety Violations, Corrective Instructions Given, Corrective Actions Taken, and Results of Safety Inspections Conducted:

See CM's Daily Report

TAILGATE TOPICS:

"

SAFE BEHAVIOR OBSERVATIONS/SELF-ASSESSMENTS:

"

OPERATIONS/PRODUCTION REPORT

WORK FORCE – CONTRACTOR AND SUBCONTRACTOR

Company	Cumulative Total of Work Hours From Previous Report	Total Hours Today	Total Work Hours From Start of Injection Event
See CM's Daily Report			

EQUIPMENT ON HAND

Description of Equipment	Make/Model/ Manufacturer	Equipment ID Number	Inspection Performed By
Water Truck	Colorado Kenworth	4610	Robert Belanger
Grader	John Deere 672G	5204	Jesus Moya
Loader	Komatsu PC200	1107	Jesus Moya
HDPE Welder x2	McElroy Tracstar	8617, 8618	Jerry Patton
Back hoe	John Deere 310SJ	1415	Jesus Moya

COMMENTS (acceptance status, inspection findings, etc.):

OK

WORK AND/OR TESTS ACCOMPLISHED OR IN PROGRESS

Performed Work/Test for Today: See CM's Daily Report

Planned Work/Test for Tomorrow: "

Planned Work/Test for Next Week: "

CHANGED CONDITIONS/DELAY/CONFLICTS ENCOUNTERED (List any conflicts with the project [i.e., scope of work and/or drawings], delays to the project attributable to site and weather conditions, etc. "

VISITORS AND DISCUSSIONS: "

QUALITY CONTROL REPORT

MATERIALS DELIVERED TO JOB SITE

Quantity/Volume/ Weight	Description of Materials Received	Make/Model/ Manufacturer	Material Lot Number	Inspection Performed By
1	Junction Vault	All American Precast	—	KM
2	Reroute pull boxes (Tier 22)	Old Castle PC2436-24	—	KM
8	Rolls of Butyl Mastic Sealant	Bidco C-56	—	KM

COMMENTS (acceptance status, inspection findings, etc.): OK - All items Accepted

INSPECTIONS PERFORMED

Task/Activity Inspected	Inspection Performed	Findings
KAFB-106228 Reroute	Visual Inspection	OK

TESTS PERFORMED

Task/Activity Tested	Test Performed	Test Results (Pass/Fail) - Criteria
None		

QUALITY ISSUES AND RESOLUTIONS: None

SUBMITTALS INSPECTION / REVIEW

Submittal No.	Submittal Description	Specification/Plan Reference	Submittal Approved?		Comment/Reason/Action
NA	Daily Report	–	Yes ☐	No ☐	Pending
NA	SBO	–	Yes ☐	No ☐	Pending
NA	PTSP	–	Yes ☐	No ☐	Pending

REGULATORY COMPLIANCE REPORT							
PERMIT INSPECTIONS PERFORMED: None							
WASTE ACCUMULATION/STOCKPILE AREA INSPECTION							
Inspection Performed By:	NA			Signature of Inspector:			
Accumulation / Stockpile Area Inspected:							
No of Bins:		No of Tankers		No of Roll-Off Boxes:		No. of Tanks	
Inspection Results: NA							
GENERAL COMMENTS							
General Comments: (rework, directives, etc.): All items Accepted							
ATTACHMENTS							
List of Attachments: (examples, as applicable: submittals, meeting minutes, safety meeting minutes, COCs, weight tickets, manifests, profiles, rework item list, RFIs, DCNs, photographs, etc.): Photo log							
NOTE: Write all entries legibly in ink. Line out all unused portions or designate as "not applicable". Preparer signs first and last name on each completed daily report. This form may be filled out electronically and signed electronically.				PREPARER'S SIGNATURE		15 NOV 17 DATE	

Location: Station 26+35
Description: KAFB-106228 Pull Box
Date: 15 November 2017 Direction: Down

Location: Station 26+35
Description: KAFB-106228 Pull Box
Date: 15 November 2017 Direction: West

Location: Station 26+35
Description: Butyl Mastic Sealant
Date: 15 November 2017 Direction: Down

Location: Station 26+35
Description: Junction Vault Bottom and Lid
Date: 15 November 2017 Direction: North

Location: Station 26+35
Description: Junction Vault Side Walls
Date: 15 November 2017 Direction: East

EA Engineering, Science, and Technology, Inc

Employee/Visitor Register and Safety Brief

Date: 11-15-17

Site Entry/Exit		Name (Printed)	Signature	Company
Time In	Time Out			
0630	1730	Tyler Corley		EA
6:30		George INgram		RMCI
6:30		Jerry Patton		RMCI
6:30		Jesus Maya		RMCI
6:30		Angel Castaneda	Angel Castaneda	RMCI
630		~~ES~~ Hyde		RMCI
6:30		Felipe Hernandez	Felipe Hernandez	RMCI
6:30		Lorenzo Tena	Lorenzo Tena	
6:30	↓	Robert BeBault		RMCI

EA ENGINEERING, SCIENCE AND TECHNOLOGY, INC.
SAFETY MEETING REPORT

Date: 11-15-17	**Time:** 0630	**Duration of meeting:** 10	**Project #** 62501.MO1
Location: KAFB Well 106739		**Task:** Conveyance Line Install	

Type of meeting: X **Daily** ___ **Weekly** ___ **Monthly** ___ **Other:** _____

Items/Issues discussed:

1. Crush points
2. pinch points
3. trench safety
4. proper PPE
5.

Attach minutes of safety meeting if taken.

Safety questions/issues raised:	**Actions/Follow-up needed:**
1. None	
2.	
3.	
4.	
5.	
6.	

Remarks: None

Meeting conducted by:
Tyler Curley

EA Engineering, Science, and Technology, Inc.

DAILY SAFETY INSPECTION CHECKLIST
(TO BE COMPLETED EACH DAY OF CONSTRUCTION OR HTRW SITE ACTIVITIES)

Site: KAFB Well 106239
Location: Ridgecrest Dr.
Project No.: 60599 D M01
Client: USACE

Prepared by SSHO: Tyler Curley
Project Manager: Devon Jercinovic
Date: 11-15-17

Rating	Y	N	N/A	Comments/Immediate Corrective Action[1]
Accident Prevention Plan (APP) and Site Safety and Health Plan (SSHP) General Requirements				
Are there new onsite personnel? • Did they receive pre-entry briefing and are their names recorded in field logbook or daily log? • Was the USACE PM made aware of the new personnel. • Required training and medical surveillance documentation received (e.g., 40-hr, 8 hr, etc.)?		✓		
Did personnel sign in/out of site?	✓			
Daily tailgate safety meetings conducted and documented?	✓			
Were new activities performed today? Were hazards identified, discussed during the daily safety tailgate, and incorporated into revised APP/SSHP?		✓		
New materials brought on site? MSDSs available?		✓		
Exclusion (EZ), Contamination Reduction (CRZ), and Support Zones (SZ) delineated and enforced?	✓			
General housekeeping measures in place to prevent hazards?	✓			
Emergency Planning				
Were there any changes to emergency contact names, telephone numbers, or hospital? If so, were site personnel made aware and was information distributed/reposted.		✓		
Adequate safety equipment inventory available?	✓			
Fire extinguisher available (monthly inspection of extinguisher will suffice)	✓			
Eyewash station(s) functioning and in place (weekly inspection of eye wash station will suffice)?	✓			
First aid supplies available (weekly inspection of first aid kit will suffice)?	✓			
Communication equipment readily available for emergencies?	✓			
Any reported accidents/incidents at this site? If so, were accident reporting procedures followed?		✓		
Air Monitoring				
Monitoring equipment specified in SSHP available and in working order? Air monitoring instrumentation for this site includes – check each if required/on site, note deficiencies in comments: • Combustible gas meter • Organic vapor analyzer • Contaminant specific analyzer for benzene (if total organic vapor concentrations exceed 0.5 ppm)	✓			
Monitoring equipment calibrated and calibration records	✓			

Y = Satisfactory or Yes; N = Unsatisfactory or No, N/A = Not applicable

Rating	Y	N	N/A	Comments/Immediate Corrective Action[1]
available?	✓			
Environmental and personnel monitoring performed as specified in SSHP?	✓			
PPE				
Proper dermal protection worn by EA and subcontracted employees when handling/ contacting hazardous chemicals or contaminated environmental media?	✓			
Required PPE (hard hats, safety boots / shoes, eye protection with side shields, hearing protection) being worn by EA and subcontracted employees?	✓			
PPE inspection completed by SSHO?	✓			
Drill Rig Operations				
Daily rig inspection completed? Any equipment problems?	✓			
Drill rigs/elevated equipment maintaining minimum 10-ft distance from energized (50 kV) overhead power lines?	✓			
Investigation-derived Waste (IDW)				
Wastes properly staged, secured, and labeled at end of day?			✓	

Additional Comments:

Site Safety and Health Officer's Signature

11-15-07

Date

[1]If a deficiency is noted that cannot be immediately corrected, the SSHO will monitor the progress in correcting the deficiency and will document following:

- Date the deficiency was identified
- Description of the deficiency
- Name of the person responsible for correcting the deficiency
- Projected date of correction
- Actual date of correction.

HEALTH AND SAFETY ACTIVITY REPORT

Site: KAFB Well 106739 Location: Ridgecrest Dr

Weather Cond.: 65°F Onsite Hours: From 0630 To 1730

Changes in PPE Levels[1]	Work Operations	Reasons for Change
None		

Site Safety and Health Plan Violations	Corrective Action Specified	Corrective Action Taken [2](yes/no)
None		

Observations and Comments:
None

Completed by: Tyler Corley Date: 11-15-17
Site Health and Safety Supervisor

[1]Only SSHO may change PPE levels, using only criteria specified in APP/SSHP.
[2]If a deficiency is noted that cannot be immediately corrected, the SSHO will monitor the progress in correcting the deficiency and will document following:

- Date the deficiency was identified
- Description of the deficiency
- Name of the person responsible for correcting the deficiency
- Projected date of correction
- Actual date of correction.

From:	Curley, Tyler
To:	"Trent.Simpler@usace.army.mil"; "Amy.E.Sanchez@usace.army.mil"; "Carlos.F.Salazar@usace.army.mil"; "Linda.Dreeland@usace.army.mil"; "Mark.J.Phaneuf@usace.army.mil"
Cc:	Jercinovic, Devon; McKeage, Kevin; Morse, Earl; Bowman, Matthew
Subject:	Activity Report for KAFB Well 106239 Conveyance Line Installation 16 November 2017
Date:	Thursday, November 16, 2017 7:40:39 PM
Attachments:	Daily Field Activities Summary Report.pdf Photos 11-16-17.pdf

---

Issues Today 16 Thursday November 2017:

- RMCI was having issues keeping the carrier and containment pipe aligned properly while lifting the line during welding operations between the HDD bore pits. As the line was lifted (to provide the appropriate slack needed for welding) the 8" containment pipe would stretch while the 4" carrier pipe would remain stationary. As a result, no welds were completed.

Resolution of Issues:

- RMCI will weld a factory end piece (centralizer is factory welded to both the containment and carrier pipes) onto the pipe without lifting to secure the containment and carrier pipes.

Work Performed Today:

- Started backfilling and compaction of HDD bore pit on the south side of Ridgecrest Dr.
- Prepped for welding of conveyance piping between HDD bore location on the north side of Ridgecrest Dr.
- Set electrical pull boxes on each side of the Ridgecrest HDD boring

Installation Completion to Date: 46%

Work Planned for 17 Nov 2017:

- Continue welding HDPE in the areas of the HDD borings on the North side of Ridgecrest

Please let me know if you need additional information.

Tyler Curley, P.E.
EA Engineering, Science, and Technology, Inc., PBC
320 Gold Avenue, SW Suite 1300
Albuquerque, NM 87120
(505) 715-4422 work
(719) 688-9558 cell
tcurley@eaest.com

DAILY FIELD ACTIVITIES SUMMARY REPORT		
PROJECT NAME: KAFB Well 106239 Conveyance Line Installation		
Date: 11-15-17	Time Shift Beginning: 0630	Time Shift Ending:1550
Project Number: 62599DM01		Contract/Task Order No.:
Client: USACE		Report By: Tyler Curley
Contractor(s): RMCI		Project Manager: Devon Jercinovic
Design Manager:		Oversight Manager: Tyler Curley
Design Engineer: George Nemeth		Site Engineer: Tyler Curley
Weather: Sunny 70° F		Logbook Number: NA
Personnel Onsite:	**Name:**	**Reason for Being Onsite:**
EA	Tyler Curley Pete Ferrari Earl Morse	Construction/Safety Oversight Environmental Monitoring Safety Oversight
RMCI	Jerry Patton Ed Hyde Felipe Hernandez Robert BeBault Jesus Moya Angel Castaneda Lorenzo Tena George Ingram	General Contractor
Wilson Electric	Britt Crooks Jaime Perez	Electrical Contractor

Work Performed:

Planned Activities:

- Continue welding HDPE in the areas of the HDD borings on the North side of Ridgecrest

Completed Activities:

- Started backfilling and compaction of HDD bore pit on the south side of Ridgecrest Dr.
- Prepped for welding of conveyance piping between HDD bore location on the north side of Ridgecrest Dr.
- Set electrical pull boxes on each side of the Ridgecrest HDD boring

Material Deliveries:

- None

Construction Quality Control Activities or Samples Collected:

- None

Observations or Possible Variations from Specifications:

- RMCI was having issues keeping the carrier and containment pipe aligned properly while lifting the line during welding operations between the HDD bore pits. As the line was lifted (to provide the appropriate slack needed for welding) the 8" containment pipe would stretch while the 4" carrier pipe would remain stationary. As a result, no welds were completed. RMCI will weld a factory end piece (centralizer is factory welded to both the containment and carrier pipes) onto the pipe without lifting to secure the containment and carrier pipes.

Anticipated Activities for the Following Day:	
• Continue welding HDPE in the areas of the HDD borings on the North side of Ridgecrest **Planned Material Deliveries:** • None	
Contractor Reports, Manifests, Documents Reviewed and Logged:	
• None	
Report Completed By:	
Tyler Curley	Date: 16 November 2017

RMCI

RMCI

RMCI

EA Engineering, Science, and Technology, Inc

Employee/Visitor Register and Safety Brief

Date: 11-16-17

Site Entry/Exit		Name (Printed)	Signature	Company
Time In	Time Out			
0630	1550	Tyler Corley		EA
6:30		Jesus Moya		RMCT
6:30		Angel Castaneda	Angel Castaneda	RMCI
6:30		Lorenzo Tena	Lorenzo Tena	RMCI
6:30		George Ingram		RMCI
6:30		Robert BeBault		RMCI
6:30		Jerry Patton		RMCI
6:30	↓	Felipe [illegible]		RMCT
6145	8:15	Earl Morse		EA
700	1400	Jaime Trujillo		Wilson Electric
700	1400	Britt Rooks		Wilson Electric
1206	1730	Pete Firrone		EA

EA ENGINEERING, SCIENCE AND TECHNOLOGY, INC.
SAFETY MEETING REPORT

Date: 11-16-17	**Time:** 0630	**Duration of meeting:** 10 min	**Project #** 62599MG1
Location: KAFB Well 106239		**Task:** Conveyance Line Install	

Type of meeting: _X_ Daily ____Weekly ____ Monthly ____ Other:_____

Items/Issues discussed:

1. Trench safety
2. hot points
3. crushing hazards
4. hospital route
5.

Attach minutes of safety meeting if taken.

Safety questions/issues raised:	Actions/Follow-up needed:
1. None	
2.	
3.	
4.	
5.	
6.	

Remarks: None

Meeting conducted by:
Tyler Curley

EA Engineering, Science, and Technology, Inc.

DAILY SAFETY INSPECTION CHECKLIST (TO BE COMPLETED EACH DAY OF CONSTRUCTION OR HTRW SITE ACTIVITIES)

Site: KAFB Well 100739
Location: Ridgecrest Dr
Project No.: 67599 DA01
Client: USACE

Prepared by SSHO: Tyler Corley
Project Manager: Devon Jercinovic
Date: 11-16-17

Rating	Y	N	N/A	Comments/Immediate Corrective Action[1]
Accident Prevention Plan (APP) and Site Safety and Health Plan (SSHP) General Requirements				
Are there new onsite personnel? • Did they receive pre-entry briefing and are their names recorded in field logbook or daily log? • Was the USACE PM made aware of the new personnel. • Required training and medical surveillance documentation received (e.g., 40-hr, 8 hr, etc.)?		✓		
Did personnel sign in/out of site?	✓			
Daily tailgate safety meetings conducted and documented?	✓			
Were new activities performed today? Were hazards identified, discussed during the daily safety tailgate, and incorporated into revised APP/SSHP?		✓		
New materials brought on site? MSDSs available?		✓		
Exclusion (EZ), Contamination Reduction (CRZ), and Support Zones (SZ) delineated and enforced?	✓			
General housekeeping measures in place to prevent hazards?	✓			
Emergency Planning				
Were there any changes to emergency contact names, telephone numbers, or hospital? If so, were site personnel made aware and was information distributed/reposted.		✓		
Adequate safety equipment inventory available?	✓			
Fire extinguisher available (monthly inspection of extinguisher will suffice)	✓			
Eyewash station(s) functioning and in place (weekly inspection of eye wash station will suffice)?	✓			
First aid supplies available (weekly inspection of first aid kit will suffice)?	✓			
Communication equipment readily available for emergencies?	✓			
Any reported accidents/incidents at this site? If so, were accident reporting procedures followed?		✓		
Air Monitoring				
Monitoring equipment specified in SSHP available and in working order? Air monitoring instrumentation for this site includes – check each if required/on site, note deficiencies in comments: • Combustible gas meter • Organic vapor analyzer • Contaminant specific analyzer for benzene (if total organic vapor concentrations exceed 0.5 ppm)	✓			
Monitoring equipment calibrated and calibration records	✓			

Y = Satisfactory or Yes; N = Unsatisfactory or No, N/A = Not applicable

Rating	Y	N	N/A	Comments/Immediate Corrective Action[1]
available?				
Environmental and personnel monitoring performed as specified in SSHP?	✓			
PPE				
Proper dermal protection worn by EA and subcontracted employees when handling/ contacting hazardous chemicals or contaminated environmental media?	✓			
Required PPE (hard hats, safety boots / shoes, eye protection with side shields, hearing protection) being worn by EA and subcontracted employees?	✓			
PPE inspection completed by SSHO?	✓			
Drill Rig Operations				
Daily rig inspection completed? Any equipment problems?	✓			
Drill rigs/elevated equipment maintaining minimum 10-ft distance from energized (50 kV) overhead power lines?	✓			
Investigation-derived Waste (IDW)				
Wastes properly staged, secured, and labeled at end of day?			✓	

Additional Comments:

Site Safety and Health Officer's Signature

11-16-17

Date

[1]If a deficiency is noted that cannot be immediately corrected, the SSHO will monitor the progress in correcting the deficiency and will document following:

- Date the deficiency was identified
- Description of the deficiency
- Name of the person responsible for correcting the deficiency
- Projected date of correction
- Actual date of correction.

HEALTH AND SAFETY ACTIVITY REPORT

Site: KAFB well 106239 Location: Ridgecrest Dr

Weather Cond.: Sunny 70°F Onsite Hours: From 0830 To 1550

Changes in PPE Levels[1]	Work Operations	Reasons for Change
None		

Site Safety and Health Plan Violations	Corrective Action Specified	Corrective Action Taken [2](yes/no)
None		

Observations and Comments:

None

Completed by: Tyler Curley Date: 11-17-17

Site Health and Safety Supervisor

[1]Only SSHO may change PPE levels, using only criteria specified in APP/SSHP.

[2]If a deficiency is noted that cannot be immediately corrected, the SSHO will monitor the progress in correcting the deficiency and will document following:

- Date the deficiency was identified
- Description of the deficiency
- Name of the person responsible for correcting the deficiency
- Projected date of correction
- Actual date of correction.

ENVIRONMENTAL MONITORING RECORD

SITE: KAFB - 106 239 Conveyance Line Install

PROJECT NO.: _____

INSTRUMENT: Noise Pro / Thermo dust monitor

Time	Monitoring Location	Reading	Corrective Action Taken[a]
1208	Calibrate	114.0 DBA / 0.000 mg/m3	
1212	sta 24 +00	65.6 / 0.009	
1214	sta 23 + 00	69.5 / 0.015	

Comments: _____

(a) Corrective actions taken must be documented whenever readings at or above action levels are reached. Monitoring equipment and action levels are specified in Section 9.33 of the Accident Prevention Plan.

Recorded By: _____ Date: _____

Site Health & Safety Officer

From:	Curley, Tyler
To:	"Trent.Simpler@usace.army.mil"; "Amy.E.Sanchez@usace.army.mil"; "Carlos.F.Salazar@usace.army.mil"; "Linda.Dreeland@usace.army.mil"; "Mark.J.Phaneuf@usace.army.mil"
Cc:	Jercinovic, Devon; McKeage, Kevin; Morse, Earl; Bowman, Matthew
Subject:	Activity Report for KAFB Well 106239 Conveyance Line Installation 17 November 2017
Date:	Friday, November 17, 2017 2:07:05 PM
Attachments:	Daily Field Activities Summary Report.pdf Photos 11-17-17.pdf

---

Issues Today 17 Friday November 2017:

- None

Resolution of Issues:

- None

Work Performed Today:

- Completed backfilling and compaction of HDD bore pit on the south side of Ridgecrest Dr.
- Welded conveyance piping between HDD bore location on the north side of Ridgecrest Dr.
- Continued rerouting 106228 communication line
- Moved jersey barrier around all open trenching on site
- Secured site for the weekend

Installation Completion to Date: 48%

Work Planned for 20 Nov 2017:

- Continue welding HDPE in the areas of the HDD borings on the North side of Ridgecrest

Please let me know if you need additional information.

Tyler Curley, P.E.
EA Engineering, Science, and Technology, Inc., PBC
320 Gold Avenue, SW Suite 1300
Albuquerque, NM 87120
(505) 715-4422 work
(719) 688-9558 cell
tcurley@eaest.com

DAILY FIELD ACTIVITIES SUMMARY REPORT		
PROJECT NAME: KAFB Well 106239 Conveyance Line Installation		
Date: 11-17-17	Time Shift Beginning: 0630	Time Shift Ending:1215
Project Number: 62599DM01		Contract/Task Order No.:
Client: USACE		Report By: Tyler Curley
Contractor(s): RMCI		Project Manager: Devon Jercinovic
Design Manager:		Oversight Manager: Tyler Curley
Design Engineer: George Nemeth		Site Engineer: Tyler Curley
Weather: Sunny 65° F		Logbook Number: NA
Personnel Onsite:	**Name:**	**Reason for Being Onsite:**
EA	Tyler Curley Pete Ferrari	Construction/Safety Oversight Safety Oversight
RMCI	Jerry Patton Ed Hyde Felipe Hernandez Robert BeBault Jesus Moya Angel Castaneda Lorenzo Tena George Ingram	General Contractor
Wilson Electric	Britt Crooks Jaime Perez	Electrical Contractor

Work Performed:

Planned Activities:

- Continue welding HDPE in the areas of the HDD borings on the North side of Ridgecrest
- Continue rerouting the 106228 communication line

Completed Activities:

- Completed backfilling and compaction of HDD bore pit on the south side of Ridgecrest Dr.
- Welded conveyance piping between HDD bore location on the north side of Ridgecrest Dr.
- Continued rerouting 106228 communication line
- Moved jersey barrier around all open trenching on site
- Secured site for the weekend

Material Deliveries:

- None

Construction Quality Control Activities or Samples Collected:

- None

Observations or Possible Variations from Specifications:

- None

Anticipated Activities for the Following Day:

- Continue welding HDPE in the areas of the HDD borings on the North side of Ridgecrest

Planned Material Deliveries:

• None
Contractor Reports, Manifests, Documents Reviewed and Logged:
• None
Report Completed By:
Tyler Curley — Date: 17 November 2017

MAT
Was

EA Engineering, Science, and Technology, Inc

Employee/Visitor Register and Safety Brief				
Date: 11-17-17				
Site Entry/Exit		Name (Printed)	Signature	Company
Time In	Time Out			
0630		Tyler Curley		EA
6:30		Felipe ~~Ll~~	Felipe ~~Ll~~	RMCI
6:30		Jesus Mayo	Jmayo	RMCI
6:30		George INgram		RMCI
6:30		Robert BeBault	~~Robert BeBault~~	RMCI
6:30		Angel Castaneda	Angel Castaneda	RMCI
6:30		Lorenzo Tena	Lorenzo Tena	RMCI
6:30		Jerry Patton	Jerry Patton	RMCI

EA ENGINEERING, SCIENCE AND TECHNOLOGY, INC.
SAFETY MEETING REPORT

Date: 11-17-17	**Time:** 0630	**Duration of meeting:** 10min	**Project #** G25491M01
Location: KAFB Well 106239		**Task:** Conveyance Line Install	

Type of meeting: _X_ Daily ____Weekly ____ Monthly ____ Other:_____

Items/Issues discussed:

1. Trench safety
2. Barricading open pits over the weekend
3. Slips, trips, falls
4.
5.

Attach minutes of safety meeting if taken.

Safety questions/issues raised:	Actions/Follow-up needed:
1. None	
2.	
3.	
4.	
5.	
6.	

Remarks:
None

Meeting conducted by:
Tyler Curley

EA Engineering, Science, and Technology, Inc.

DAILY SAFETY INSPECTION CHECKLIST
(TO BE COMPLETED EACH DAY OF CONSTRUCTION OR HTRW SITE ACTIVITIES)

Site: KAFB Well IC6739
Location: Ridgecrest Dr
Project No.: 62599 DM01
Client: USACE

Prepared by SSHO: Tyler Curley
Project Manager: Devon Jercinovic
Date : 11-17-17

Rating	Y	N	N/A	Comments/Immediate Corrective Action[1]
Accident Prevention Plan (APP) and Site Safety and Health Plan (SSHP) General Requirements				
Are there new onsite personnel? • Did they receive pre-entry briefing and are their names recorded in field logbook or daily log? • Was the USACE PM made aware of the new personnel. • Required training and medical surveillance documentation received (e.g., 40-hr, 8 hr, etc.)?		✓		
Did personnel sign in/out of site?	✓			
Daily tailgate safety meetings conducted and documented?	✓			
Were new activities performed today? Were hazards identified, discussed during the daily safety tailgate, and incorporated into revised APP/SSHP?		✓		
New materials brought on site? MSDSs available?		✓		
Exclusion (EZ), Contamination Reduction (CRZ), and Support Zones (SZ) delineated and enforced?	✓			
General housekeeping measures in place to prevent hazards?	✓			
Emergency Planning				
Were there any changes to emergency contact names, telephone numbers, or hospital? If so, were site personnel made aware and was information distributed/reposted.		✓		
Adequate safety equipment inventory available?	✓			
Fire extinguisher available (monthly inspection of extinguisher will suffice)	✓			
Eyewash station(s) functioning and in place (weekly inspection of eye wash station will suffice)?	✓			
First aid supplies available (weekly inspection of first aid kit will suffice)?	✓			
Communication equipment readily available for emergencies?	✓			
Any reported accidents/incidents at this site? If so, were accident reporting procedures followed?				
Air Monitoring				
Monitoring equipment specified in SSHP available and in working order? Air monitoring instrumentation for this site includes – check each if required/on site, note deficiencies in comments: • Combustible gas meter • Organic vapor analyzer • Contaminant specific analyzer for benzene (if total organic vapor concentrations exceed 0.5 ppm)	✓			
Monitoring equipment calibrated and calibration records	✓			

Y = Satisfactory or Yes; N = Unsatisfactory or No, N/A = Not applicable

Rating	Y	N	N/A	Comments/Immediate Corrective Action[1]
available?				
Environmental and personnel monitoring performed as specified in SSHP?	✓			
PPE				
Proper dermal protection worn by EA and subcontracted employees when handling/ contacting hazardous chemicals or contaminated environmental media?	✓			
Required PPE (hard hats, safety boots / shoes, eye protection with side shields, hearing protection) being worn by EA and subcontracted employees?	✓			
PPE inspection completed by SSHO?	✓			
Drill Rig Operations				
Daily rig inspection completed? Any equipment problems?	✓			
Drill rigs/elevated equipment maintaining minimum 10-ft distance from energized (50 kV) overhead power lines?	✓			
Investigation-derived Waste (IDW)				
Wastes properly staged, secured, and labeled at end of day?			✓	

Additional Comments:

None

Site Safety and Health Officer's Signature

11-17-17

Date

[1]If a deficiency is noted that cannot be immediately corrected, the SSHO will monitor the progress in correcting the deficiency and will document following:

- Date the deficiency was identified
- Description of the deficiency
- Name of the person responsible for correcting the deficiency
- Projected date of correction
- Actual date of correction.

HEALTH AND SAFETY ACTIVITY REPORT

Site: KAFB Well 106239 Location: Ridgecrest Dr

Weather Cond.: Sunny Onsite Hours: From 0630 To 1215

Changes in PPE Levels[1]	Work Operations	Reasons for Change
None		

Site Safety and Health Plan Violations	Corrective Action Specified	Corrective Action Taken [2](yes/no)
None		

Observations and Comments:
None

Completed by: _____ Date:
Site Health and Safety Supervisor

[1]Only SSHO may change PPE levels, using only criteria specified in APP/SSHP.
[2]If a deficiency is noted that cannot be immediately corrected, the SSHO will monitor the progress in correcting the deficiency and will document following:

- Date the deficiency was identified
- Description of the deficiency
- Name of the person responsible for correcting the deficiency
- Projected date of correction
- Actual date of correction.

From:	Curley, Tyler
To:	"Trent.Simpler@usace.army.mil"; "Amy.E.Sanchez@usace.army.mil"; "Carlos.F.Salazar@usace.army.mil"; "Linda.Dreeland@usace.army.mil"; "Mark.J.Phaneuf@usace.army.mil"
Cc:	Jercinovic, Devon; McKeage, Kevin; Morse, Earl; Bowman, Matthew
Subject:	Activity Report for KAFB Well 106239 Conveyance Line Installation 20 November 2017
Date:	Monday, November 20, 2017 5:01:03 PM
Attachments:	Daily Field Activities Summary Report.pdf Photos 11-20-17.pdf

---

Issues Today 20 Monday November 2017:

- None

Resolution of Issues:

- None

Work Performed Today:

- Completed backfilling and compaction of HDD bore pit on the north side of Ridgecrest Dr.
- Welded conveyance piping between HDD bore location near Louisiana Blvd.
- Continued rerouting 106228 communication line
- Moved jersey barrier around all open trenching on site

Installation Completion to Date: 50%

Work Planned for 21 Nov 2017:

- Backfill and compaction of open HDD bore pits

Please let me know if you need additional information.

Tyler Curley, P.E.
EA Engineering, Science, and Technology, Inc., PBC
320 Gold Avenue, SW Suite 1300
Albuquerque, NM 87120
(505) 715-4422 work
(719) 688-9558 cell
tcurley@eaest.com

DAILY FIELD ACTIVITIES SUMMARY REPORT		
PROJECT NAME: KAFB Well 106239 Conveyance Line Installation		
Date: 11-20-17	Time Shift Beginning: 0630	Time Shift Ending:1520
Project Number: 62599DM01		Contract/Task Order No.:
Client: USACE		Report By: Tyler Curley
Contractor(s): RMCI		Project Manager: Devon Jercinovic
Design Manager:		Oversight Manager: Tyler Curley
Design Engineer: George Nemeth		Site Engineer: Tyler Curley
Weather: Sunny 60° F		Logbook Number: NA
Personnel Onsite:	**Name:**	**Reason for Being Onsite:**
EA	Tyler Curley Earl Morse	Construction/Safety Oversight Safety Oversight
RMCI	Jerry Patton Ed Hyde Felipe Hernandez Robert BeBault Jesus Moya Angel Castaneda Lorenzo Tena George Ingram	General Contractor
Wilson Electric	Britt Crooks Jaime Perez	Electrical Contractor

Work Performed:

Planned Activities:

- Continue welding HDPE in the areas of the HDD borings on the North side of Ridgecrest
- Continue rerouting the 106228 communication line

Completed Activities:

- Completed backfilling and compaction of HDD bore pit on the north side of Ridgecrest Dr.
- Welded conveyance piping between HDD bore location near Louisiana Blvd.
- Continued rerouting 106228 communication line
- Moved jersey barrier around all open trenching on site

Material Deliveries:

- None

Construction Quality Control Activities or Samples Collected:

- None

Observations or Possible Variations from Specifications:

- None

Anticipated Activities for the Following Day:

- Backfill and compaction of open HDD bore pits

Planned Material Deliveries:

- None

Contractor Reports, Manifests, Documents Reviewed and Logged:	
• None	
Report Completed By:	
Tyler Curley	Date: 18 November 2017

DEERE
RMCT

DEERE

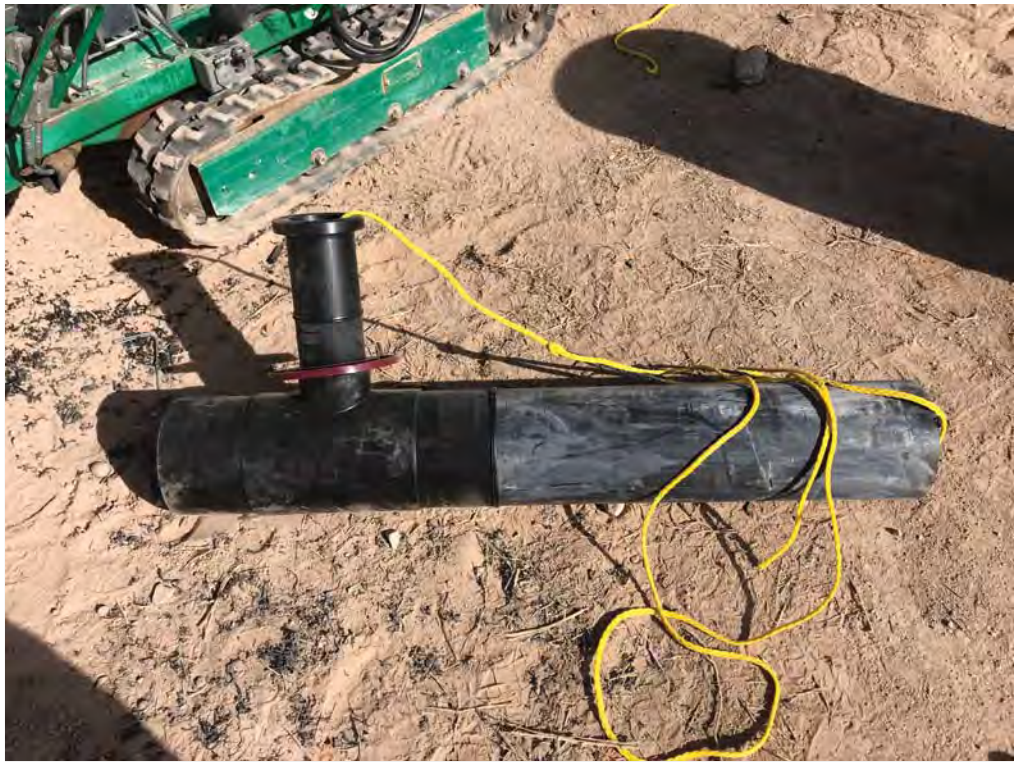

RMCT INC

EA Engineering, Science, and Technology, Inc

Employee/Visitor Register and Safety Brief

Date: 11-20-17

Site Entry/Exit		Name (Printed)	Signature	Company
Time In	Time Out			
0630	1500	Tyler Curley		EA
6:30	↓	Felipe Ku	Felipe Ku	RMCI
6:30		Robert Bebout	Bebout	RMCI
6:30		George Ingram		RMCI
6:30		Angel Castaneda	Angel Castaneda	RMCI
6:30		Lorenzo Tena	Lorenzo Tena	RMCI
6:30		Jesus Mayo		RMCI
[illegible]		[illegible]		RMCI
630	↓	Ed Hyde		RMCI
930	1400	Earl Morse		EA
930	↓	Britt Crooks	BC	Wilson
930	↓	Jaime Tenorio Perez		wilsonelectric

EA ENGINEERING, SCIENCE AND TECHNOLOGY, INC.
SAFETY MEETING REPORT

Date: 11-20-17	**Time:** 0630	**Duration of meeting:** 10 min	**Project #** 25919.0401
Location: KAFB Well IC6239		**Task:** Conveyance Line Install	

Type of meeting: X **Daily** ____ **Weekly** ____ **Monthly** ____ **Other:** _____

Items/Issues discussed:

1. Slip/trips/falls
2. Moving equipment
3. trench safety
4. hot points
5. PPE

Attach minutes of safety meeting if taken.

Safety questions/issues raised:	Actions/Follow-up needed:
1. None	
2.	
3.	
4.	
5.	
6.	

Remarks: None

Meeting conducted by:

Tyler Curley

EA Engineering, Science, and Technology, Inc.

DAILY SAFETY INSPECTION CHECKLIST (TO BE COMPLETED EACH DAY OF CONSTRUCTION OR HTRW SITE ACTIVITIES)

Site: KAFB Well 106239
Location: Ridgecrest Dr
Project No.: G2599 DM01
Client: USACE

Prepared by SSHO: Tyler Corley
Project Manager: Deven Jercinovic
Date: 11-20-17

Rating	Y	N	N/A	Comments/Immediate Corrective Action[1]
Accident Prevention Plan (APP) and Site Safety and Health Plan (SSHP) General Requirements				
Are there new onsite personnel? • Did they receive pre-entry briefing and are their names recorded in field logbook or daily log? • Was the USACE PM made aware of the new personnel. • Required training and medical surveillance documentation received (e.g., 40-hr, 8 hr, etc.)?		✓		
Did personnel sign in/out of site?	✓			
Daily tailgate safety meetings conducted and documented?	✓			
Were new activities performed today? Were hazards identified, discussed during the daily safety tailgate, and incorporated into revised APP/SSHP?		✓		
New materials brought on site? MSDSs available?		✓		
Exclusion (EZ), Contamination Reduction (CRZ), and Support Zones (SZ) delineated and enforced?	✓			
General housekeeping measures in place to prevent hazards?	✓			
Emergency Planning				
Were there any changes to emergency contact names, telephone numbers, or hospital? If so, were site personnel made aware and was information distributed/reposted.		✓		
Adequate safety equipment inventory available?	✓			
Fire extinguisher available (monthly inspection of extinguisher will suffice)	✓			
Eyewash station(s) functioning and in place (weekly inspection of eye wash station will suffice)?	✓			
First aid supplies available (weekly inspection of first aid kit will suffice)?	✓			
Communication equipment readily available for emergencies?	✓			
Any reported accidents/incidents at this site? If so, were accident reporting procedures followed?		✓		
Air Monitoring				
Monitoring equipment specified in SSHP available and in working order? Air monitoring instrumentation for this site includes – check each if required/on site, note deficiencies in comments: • Combustible gas meter • Organic vapor analyzer • Contaminant specific analyzer for benzene (if total organic vapor concentrations exceed 0.5 ppm)	✓			
Monitoring equipment calibrated and calibration records	✓			

Y = Satisfactory or Yes; N = Unsatisfactory or No, N/A = Not applicable

Rating	Y	N	N/A	Comments/Immediate Corrective Action[1]
available?				
Environmental and personnel monitoring performed as specified in SSHP?	✓			
PPE				
Proper dermal protection worn by EA and subcontracted employees when handling/ contacting hazardous chemicals or contaminated environmental media?	✓			
Required PPE (hard hats, safety boots / shoes, eye protection with side shields, hearing protection) being worn by EA and subcontracted employees?	✓			
PPE inspection completed by SSHO?	✓			
Drill Rig Operations				
Daily rig inspection completed? Any equipment problems?	✓			
Drill rigs/elevated equipment maintaining minimum 10-ft distance from energized (50 kV) overhead power lines?	✓			
Investigation-derived Waste (IDW)				
Wastes properly staged, secured, and labeled at end of day?			✓	

Additional Comments:

Site Safety and Health Officer's Signature

11-20-17

Date

[1]If a deficiency is noted that cannot be immediately corrected, the SSHO will monitor the progress in correcting the deficiency and will document following:

- Date the deficiency was identified
- Description of the deficiency
- Name of the person responsible for correcting the deficiency
- Projected date of correction
- Actual date of correction.

HEALTH AND SAFETY ACTIVITY REPORT

Site: KAFB Well 106739 Location: Ridgecrest Dr

Weather Cond.: Sunny 60F Onsite Hours: From 0630 To 1530

Changes in PPE Levels[1]	Work Operations	Reasons for Change
None		

Site Safety and Health Plan Violations	Corrective Action Specified	Corrective Action Taken [2](yes/no)
None		

Observations and Comments:

None

Completed by: Tyler Curley Date: 11-20-17

Site Health and Safety Supervisor

[1]Only SSHO may change PPE levels, using only criteria specified in APP/SSHP.

[2]If a deficiency is noted that cannot be immediately corrected, the SSHO will monitor the progress in correcting the deficiency and will document following:

- Date the deficiency was identified
- Description of the deficiency
- Name of the person responsible for correcting the deficiency
- Projected date of correction
- Actual date of correction.

From:	Curley, Tyler
To:	"Trent.Simpler@usace.army.mil"; "Amy.E.Sanchez@usace.army.mil"; "Carlos.F.Salazar@usace.army.mil"; "Linda.Dreeland@usace.army.mil"; "Mark.J.Phaneuf@usace.army.mil"
Cc:	Jercinovic, Devon; McKeage, Kevin; Morse, Earl; Bowman, Matthew
Subject:	Activity Report for KAFB Well 106239 Conveyance Line Installation 21 November 2017
Date:	Tuesday, November 21, 2017 4:55:35 PM
Attachments:	Daily Field Activities Summary Report.pdf Photos 11-21-17.pdf

---

Issues Today 21 Tuesday November 2017:

- None

Resolution of Issues:

- None

Work Performed Today:

- Backfilled and compacted HDD pits on the North side of Ridgecrest Dr. (all excavation off base has been completed and backfilled)
- Began site clean up

Installation Completion to Date: 52%

Work Planned for 22 Nov 2017:

- Site clean up
- Prep for on-base excavation

Please let me know if you need additional information.

Tyler Curley, P.E.
EA Engineering, Science, and Technology, Inc., PBC
320 Gold Avenue, SW Suite 1300
Albuquerque, NM 87120
(505) 715-4422 work
(719) 688-9558 cell
tcurley@eaest.com

DAILY FIELD ACTIVITIES SUMMARY REPORT		
PROJECT NAME: KAFB Well 106239 Conveyance Line Installation		
Date: 11-21-17	Time Shift Beginning: 0630	Time Shift Ending:1450
Project Number: 62599DM01		Contract/Task Order No.:
Client: USACE		Report By: Tyler Curley
Contractor(s): RMCI		Project Manager: Devon Jercinovic
Design Manager:		Oversight Manager: Tyler Curley
Design Engineer: George Nemeth		Site Engineer: Tyler Curley
Weather: Sunny 65° F		Logbook Number: NA
Personnel Onsite:	**Name:**	**Reason for Being Onsite:**
EA	Tyler Curley Earl Morse Kevin McKeage	Construction/Safety Oversight Safety Oversight Site Visit
RMCI	Jerry Patton Ed Hyde Phillip Johnson Felipe Hernandez Robert BeBault Jesus Moya Angel Castaneda Lorenzo Tena George Ingram	General Contractor
Wilson Electric	Britt Crooks Jaime Perez	Electrical Contractor

Work Performed:

Planned Activities:

- Backfill and compaction of open HDD bore pits

Completed Activities:

- Backfilled and compacted HDD pits on the North side of Ridgecrest Dr. (all excavation off base has been completed and backfilled)
- Began site clean up

Material Deliveries:

- None

Construction Quality Control Activities or Samples Collected:

- None

Observations or Possible Variations from Specifications:

- None

Anticipated Activities for the Following Day:

- Site clean up
- Prep for on-base excavation

Planned Material Deliveries:

- None

Contractor Reports, Manifests, Documents Reviewed and Logged:	
• None	
Report Completed By:	
Tyler Curley	Date: 21 November 2017

RMCI INC
GENERAL CONTRACTOR

WACKER
RT
RMCI

EA Engineering, Science, and Technology, Inc

Employee/Visitor Register and Safety Brief

Date: 11-21-17

Site Entry/Exit		Name (Printed)	Signature	Company
Time In	Time Out			
0630	1450	Tyler Curley		EA
6:30		Angel Castaneda	Angel Castaneda	RMCI
6:30		Jesus Moya		RMCI
6:30		Felipe Lo	Felipe H	RMCI
6:30		George Ingram		RMCI
6:30		Jerry Patton		RmcI
6:30		Lorenzo Tena		RMCI
6:30		Robert Burkett		RMCI
6:30	↓	[illegible]		RmcI
8:00	1130	Earl Morse		EA
7:30	06:00	Kim McKenzie		EA
8:30	9:30	Phillip Johnson		RMCI

EA ENGINEERING, SCIENCE AND TECHNOLOGY, INC.
SAFETY MEETING REPORT

Date: 11-21-17	**Time:** 0630	**Duration of meeting:** 10min	**Project #** 083900M01
Location: KAFB Well 106239		**Task:** Conveyance Line Install	

Type of meeting: _X_ **Daily** ____ **Weekly** ____ **Monthly** ____ **Other:**_____

Items/Issues discussed:

1. Trench safety
2. Pinch points
3. Moving equipment
4. Crushing hazards
5.

Attach minutes of safety meeting if taken.

Safety questions/issues raised:	**Actions/Follow-up needed:**
1. None	
2.	
3.	
4.	
5.	
6.	

Remarks: None

Meeting conducted by:

Tyler Curley

EA Engineering, Science, and Technology, Inc.

DAILY SAFETY INSPECTION CHECKLIST
(TO BE COMPLETED EACH DAY OF CONSTRUCTION OR HTRW SITE ACTIVITIES)

Site: KAFB Well 106239
Location: Ridgecrest Dr
Project No.: 62569 DM01
Client: USACE

Prepared by SSHO: Tyler Curley
Project Manager: Devon Jercinovic
Date: 11-21-17

Rating	Y	N	N/A	Comments/Immediate Corrective Action[1]
Accident Prevention Plan (APP) and Site Safety and Health Plan (SSHP) General Requirements				
Are there new onsite personnel? • Did they receive pre-entry briefing and are their names recorded in field logbook or daily log? • Was the USACE PM made aware of the new personnel. • Required training and medical surveillance documentation received (e.g., 40-hr, 8 hr, etc.)?		✓		
Did personnel sign in/out of site?	✓			
Daily tailgate safety meetings conducted and documented?	✓			
Were new activities performed today? Were hazards identified, discussed during the daily safety tailgate, and incorporated into revised APP/SSHP?		✓		
New materials brought on site? MSDSs available?		✓		
Exclusion (EZ), Contamination Reduction (CRZ), and Support Zones (SZ) delineated and enforced?	✓			
General housekeeping measures in place to prevent hazards?	✓			
Emergency Planning				
Were there any changes to emergency contact names, telephone numbers, or hospital? If so, were site personnel made aware and was information distributed/reposted.		✓		
Adequate safety equipment inventory available?	✓			
Fire extinguisher available (monthly inspection of extinguisher will suffice)	✓			
Eyewash station(s) functioning and in place (weekly inspection of eye wash station will suffice)?	✓			
First aid supplies available (weekly inspection of first aid kit will suffice)?	✓			
Communication equipment readily available for emergencies?	✓			
Any reported accidents/incidents at this site? If so, were accident reporting procedures followed?				
Air Monitoring				
Monitoring equipment specified in SSHP available and in working order? Air monitoring instrumentation for this site includes – check each if required/on site, note deficiencies in comments: • Combustible gas meter • Organic vapor analyzer • Contaminant specific analyzer for benzene (if total organic vapor concentrations exceed 0.5 ppm)	✓			
Monitoring equipment calibrated and calibration records	✓			

Y = Satisfactory or Yes; N = Unsatisfactory or No, N/A = Not applicable

Rating	Y	N	N/A	Comments/Immediate Corrective Action[1]
available?				
Environmental and personnel monitoring performed as specified in SSHP?	✓			
PPE				
Proper dermal protection worn by EA and subcontracted employees when handling/ contacting hazardous chemicals or contaminated environmental media?	✓			
Required PPE (hard hats, safety boots / shoes, eye protection with side shields, hearing protection) being worn by EA and subcontracted employees?	✓			
PPE inspection completed by SSHO?	✓			
Drill Rig Operations				
Daily rig inspection completed? Any equipment problems?	✓			
Drill rigs/elevated equipment maintaining minimum 10-ft distance from energized (50 kV) overhead power lines?	✓			
Investigation-derived Waste (IDW)				
Wastes properly staged, secured, and labeled at end of day?			✓	

Additional Comments:

Site Safety and Health Officer's Signature

11-21-17
Date

[1]If a deficiency is noted that cannot be immediately corrected, the SSHO will monitor the progress in correcting the deficiency and will document following:

- Date the deficiency was identified
- Description of the deficiency
- Name of the person responsible for correcting the deficiency
- Projected date of correction
- Actual date of correction.

HEALTH AND SAFETY ACTIVITY REPORT

Site: KAFB Well 106239 Location: Ridgecrest Dr.

Weather Cond.: Sunny 65°F Onsite Hours: From 0630 To _____

Changes in PPE Levels[1]	Work Operations	Reasons for Change
None		

Site Safety and Health Plan Violations	Corrective Action Specified	Corrective Action Taken [2](yes/no)
None		

Observations and Comments:

None

Completed by: Tyler Corley Date: 11-21-17

Site Health and Safety Supervisor

[1]Only SSHO may change PPE levels, using only criteria specified in APP/SSHP.

[2]If a deficiency is noted that cannot be immediately corrected, the SSHO will monitor the progress in correcting the deficiency and will document following:

- Date the deficiency was identified
- Description of the deficiency
- Name of the person responsible for correcting the deficiency
- Projected date of correction
- Actual date of correction.

From:	Curley, Tyler
To:	"Trent.Simpler@usace.army.mil"; "Amy.E.Sanchez@usace.army.mil"; "Carlos.F.Salazar@usace.army.mil"; "Linda.Dreeland@usace.army.mil"; "Mark.J.Phaneuf@usace.army.mil"
Cc:	Jercinovic, Devon; McKeage, Kevin; Morse, Earl; Bowman, Matthew
Subject:	Activity Report for KAFB Well 106239 Conveyance Line Installation 22 November 2017
Date:	Wednesday, November 22, 2017 1:13:04 PM
Attachments:	Daily Field Activities Summary Report.pdf Photos 11-22-17.pdf 022 CQM Daily Report 22NOV17.pdf

---

Issues Today 22 Wednesday November 2017:

- None

Resolution of Issues:

- None

Work Performed Today:

- Site clean up
- Prep for on-base excavation
- Performed density testing at Sta 18+50, Sta 20+75, and Sta 23+50

Installation Completion to Date: 52%

Work Planned for 27 Nov 2017:

- Begin excavation around 228 conveyance line
- Begin installation of junction vault
- Continue the reroute of the 228 communication line

Please let me know if you need additional information.

Happy Thanksgiving everyone,

Tyler Curley, P.E.
EA Engineering, Science, and Technology, Inc., PBC
320 Gold Avenue, SW Suite 1300
Albuquerque, NM 87120
(505) 715-4422 work
(719) 688-9558 cell
tcurley@eaest.com

DAILY FIELD ACTIVITIES SUMMARY REPORT		
PROJECT NAME: KAFB Well 106239 Conveyance Line Installation		
Date: 11-22-17	Time Shift Beginning: 0630	Time Shift Ending:1150
Project Number: 62599DM01		Contract/Task Order No.:
Client: USACE		Report By: Tyler Curley
Contractor(s): RMCI		Project Manager: Devon Jercinovic
Design Manager:		Oversight Manager: Tyler Curley
Design Engineer: George Nemeth		Site Engineer: Tyler Curley
Weather: Sunny 65° F		Logbook Number: NA
Personnel Onsite:	**Name:**	**Reason for Being Onsite:**
EA	Tyler Curley Kevin McKeage	Construction/Safety Oversight Site Visit
RMCI	Jerry Patton Ed Hyde Felipe Hernandez Robert BeBault Jesus Moya Angel Castaneda Lorenzo Tena George Ingram	General Contractor

Work Performed:

Planned Activities:

- Site clean up
- Prep for on-base excavation

Completed Activities:

- Site clean up
- Prep for on-base excavation
- Performed density testing at Sta 18+50, Sta 20+75, and Sta 23+50

Material Deliveries:

- None

Construction Quality Control Activities or Samples Collected:

- Density testing

Observations or Possible Variations from Specifications:

- None

Anticipated Activities for the Following Day:

- Begin excavation around 228 conveyance line
- Begin installation of junction vault
- Continue the reroute of the 228 communication line

Planned Material Deliveries:

- None

Contractor Reports, Manifests, Documents Reviewed and Logged:	
• None	
Report Completed By:	
Tyler Curley	Date: 22 November 2017

DAILY REPORT

(ATTACH ADDITIONAL SHEETS IF NECESSARY)

CONTRACT NAME:	Kirtland AFB Bulk Fuels Facility Expansion of Dissolved Plume GWTS Design	REPORT NO:	022
CONTRACT NUMBER:	W912DR-12-D-0006	REPORT DATE:	22NOV17
REVISION NUMBER:	-	REVISION DATE:	-
TASK ORDER NUMBER:	DM01	PROJECT NAME / LOCATION:	Kirtland BFF
PROJECT NUMBER:	62599DM01	PROJECT DESCRIPTION:	Installation of KAFB-106239 Conveyance Line
PROJECT MANAGER:	Devon Jercinovic	FIELD QUALITY MANAGER:	Kevin McKeage
CONSTRUCTION MANAGER:	Tyler Curley	SITE SAFETY MANAGER:	Tyler Curley

AM WEATHER:	Cool Clear	PM WEATHER:	Warm Clear	MAX TEMP (F):	62		

SUMMARY OF WORK PERFORMED TODAY

CQM Inspection of Compaction Testing and Results

HEALTH AND SAFETY REPORT

SAFETY ACTIONS TAKEN TODAY/SAFETY INSPECTIONS CONDUCTED (Include Observations, Safety Violations, Corrective Instructions Given, Corrective Actions Taken, and Results of Safety Inspections Conducted:

See Construction Manager's Daily Report

TAILGATE TOPICS:

11

SAFE BEHAVIOR OBSERVATIONS/SELF-ASSESSMENTS:

11

OPERATIONS/PRODUCTION REPORT

WORK FORCE – CONTRACTOR AND SUBCONTRACTOR

Company	Cumulative Total of Work Hours From Previous Report	Total Hours Today	Total Work Hours From Start of Injection Event
See CM's Daily Report.			

EQUIPMENT ON HAND

Description of Equipment	Make/Model/ Manufacturer	Equipment ID Number	Inspection Performed By
Water Truck	Colorado Kenworth	4610	Robert Rebault
Loader	Komatsu PC 200	1107	Jesus Moya
HDPE Welder (x2)	McElroy Tracstar	8617, 8618	Jerry Patton
Back hoe	John Deere 310SJ	1415	Jesus Moya

COMMENTS (acceptance status, inspection findings, etc.):

OK

WORK AND/OR TESTS ACCOMPLISHED OR IN PROGRESS

Performed Work/Test for Today: See CM's Daily Report

Planned Work/Test for Tomorrow: "

Planned Work/Test for Next Week: "

CHANGED CONDITIONS/DELAY/CONFLICTS ENCOUNTERED (List any conflicts with the project [i.e., scope of work and/or drawings], delays to the project attributable to site and weather conditions, etc. "

VISITORS AND DISCUSSIONS: "

QUALITY CONTROL REPORT

MATERIALS DELIVERED TO JOB SITE

Quantity/Volume/ Weight	Description of Materials Received	Make/Model/ Manufacturer	Material Lot Number	Inspection Performed By
None				

COMMENTS (acceptance status, inspection findings, etc.): None

INSPECTIONS PERFORMED

Task/Activity Inspected	Inspection Performed	Findings
Compaction Testing	Visual Inspection	OK

TESTS PERFORMED

Task/Activity Tested	Test Performed	Test Results (Pass/Fail) - Criteria
Compaction	Compaction 18+50	Pass, 85% +, +/- 5%
Backfilling	Compaction 20+75, 23+50	Pass, 85% +, +/- 5%

QUALITY ISSUES AND RESOLUTIONS: None

SUBMITTALS INSPECTION / REVIEW

Submittal No.	Submittal Description	Specification/Plan Reference	Submittal Approved?		Comment/Reason/Action
N/A	Daily Report	-	Yes ☐	No ☐	Pending
N/A	SBO	-	Yes ☐	No ☐	Pending
N/A	PTSP	-	Yes ☐	No ☐	Pending

REGULATORY COMPLIANCE REPORT							
PERMIT INSPECTIONS PERFORMED: None							
WASTE ACCUMULATION/STOCKPILE AREA INSPECTION							
Inspection Performed By:	NA			Signature of Inspector:			
Accumulation / Stockpile Area Inspected:							
No of Bins:		No of Tankers		No of Roll-Off Boxes:		No. of Tanks	
Inspection Results: NA							
GENERAL COMMENTS							
General Comments: (rework, directives, etc.): Compaction Testing all Passed							
ATTACHMENTS							
List of Attachments: (examples, as applicable: submittals, meeting minutes, safety meeting minutes, COCs, weight tickets, manifests, profiles, rework item list, RFIs, DCNs, photographs, etc.): Photo log							
NOTE: Write all entries legibly in ink. Line out all unused portions or designate as "not applicable". Preparer signs first and last name on each completed daily report. This form may be filled out electronically and signed electronically.				PREPARER'S SIGNATURE		22NOV17 DATE	

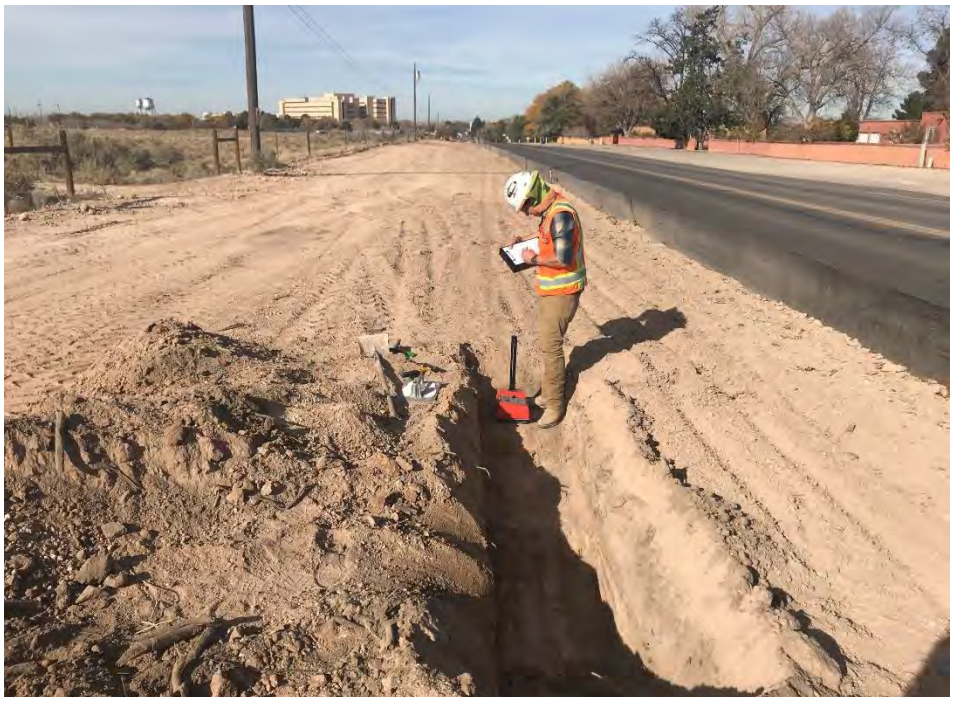

Location: Station 18+50
Description: Compaction Testing
Date: 22 November 2017 Direction: Down

Location: Station 18+50
Description: Compaction Test Results (Formal copy to be submitted at a later date)
Date: 22 November 2017 Direction: Down

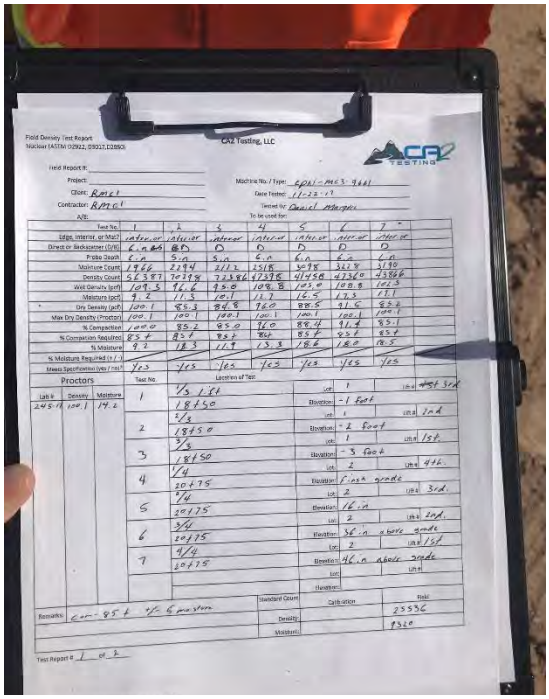

Location: Station 23+50
Description: Compaction Test Results (Formal copy to be submitted at a later date)
Date: 22 November 2017 Direction: Down

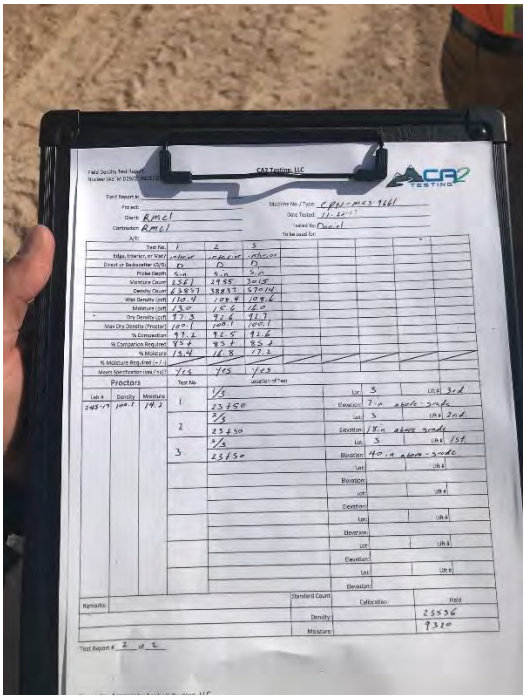

Location: Station 23+50
Description: Compaction Test Results (Formal copy to be submitted at a later date)
Date: 22 November 2017 Direction: Down

EA Engineering, Science, and Technology, Inc

Employee/Visitor Register and Safety Brief

Date: 11-22-17

Site Entry/Exit		Name (Printed)	Signature	Company
Time In	Time Out			
0630	1150	Tyler Curley		EA
06:30		Felipe Hernandez	Felipe Hernandez	RMCI
6.30		Robert BeBout	BeBout	RMCI
6:30		Angel Castaneda	Angel Castaneda	RMCI
6:30		Jesus Moyo	Jmoyo	RMCI
6:30		Lorenzo Tena	Lorenzo Tena	RMCI
6:30		George Ingram		RMCI
6:30		Jerry Patton		RmcI
630	↓	ED Hyde		RMCI
7:30	10:00	Monte Leiding	Monte Leiding	RMCI
9:30	11:30	Daniel Margrave		CA2 Testing
11:00	11:30	Kevin McKaye		EA

EA ENGINEERING, SCIENCE AND TECHNOLOGY, INC.
SAFETY MEETING REPORT

Date: 11-22-17	**Time:** 0630	**Duration of meeting:** 10min	**Project #** 085991.M01
Location: KAFB Well 106239		**Task:** Conveyance Line Install	

Type of meeting: _X_ **Daily** ____ **Weekly** ____ **Monthly** ____ **Other:**_____

Items/Issues discussed:

1. Traffic
2. Pinch points
3. Crushing hazards
4. Moving equipment
5.

Attach minutes of safety meeting if taken.

Safety questions/issues raised:	Actions/Follow-up needed:
1. None	
2.	
3.	
4.	
5.	
6.	

Remarks: None

Meeting conducted by:
Tyler Curley

EA Engineering, Science, and Technology, Inc.

DAILY SAFETY INSPECTION CHECKLIST (TO BE COMPLETED EACH DAY OF CONSTRUCTION OR HTRW SITE ACTIVITIES)

Site: KAFB Well 100239
Location: Ridgecrest Dr.
Project No.: 62599 DM01
Client: USACE

Prepared by SSHO: Tyler Curley
Project Manager: Devon Jercinovic
Date: 11-22-17

Rating	Y	N	N/A	Comments/Immediate Corrective Action[1]
Accident Prevention Plan (APP) and Site Safety and Health Plan (SSHP) General Requirements				
Are there new onsite personnel? • Did they receive pre-entry briefing and are their names recorded in field logbook or daily log? • Was the USACE PM made aware of the new personnel. • Required training and medical surveillance documentation received (e.g., 40-hr, 8 hr, etc.)?		✓		
Did personnel sign in/out of site?	✓			
Daily tailgate safety meetings conducted and documented?	✓			
Were new activities performed today? Were hazards identified, discussed during the daily safety tailgate, and incorporated into revised APP/SSHP?		✓		
New materials brought on site? MSDSs available?		✓		
Exclusion (EZ), Contamination Reduction (CRZ), and Support Zones (SZ) delineated and enforced?	✓			
General housekeeping measures in place to prevent hazards?	✓			
Emergency Planning				
Were there any changes to emergency contact names, telephone numbers, or hospital? If so, were site personnel made aware and was information distributed/reposted.		✓		
Adequate safety equipment inventory available?	✓			
Fire extinguisher available (monthly inspection of extinguisher will suffice)	✓			
Eyewash station(s) functioning and in place (weekly inspection of eye wash station will suffice)?	✓			
First aid supplies available (weekly inspection of first aid kit will suffice)?	✓			
Communication equipment readily available for emergencies?	✓			
Any reported accidents/incidents at this site? If so, were accident reporting procedures followed?		✓		
Air Monitoring				
Monitoring equipment specified in SSHP available and in working order? Air monitoring instrumentation for this site includes – check each if required/on site, note deficiencies in comments: • Combustible gas meter • Organic vapor analyzer • Contaminant specific analyzer for benzene (if total organic vapor concentrations exceed 0.5 ppm)	✓			
Monitoring equipment calibrated and calibration records	✓			

Y = Satisfactory or Yes; N = Unsatisfactory or No, N/A = Not applicable

Rating	Y	N	N/A	Comments/Immediate Corrective Action[1]
available?				
Environmental and personnel monitoring performed as specified in SSHP?	✓			
PPE				
Proper dermal protection worn by EA and subcontracted employees when handling/ contacting hazardous chemicals or contaminated environmental media?	✓			
Required PPE (hard hats, safety boots / shoes, eye protection with side shields, hearing protection) being worn by EA and subcontracted employees?	✓			
PPE inspection completed by SSHO?	✓			
Drill Rig Operations				
Daily rig inspection completed? Any equipment problems?	✓			
Drill rigs/elevated equipment maintaining minimum 10-ft distance from energized (50 kV) overhead power lines?	✓			
Investigation-derived Waste (IDW)				
Wastes properly staged, secured, and labeled at end of day?			✓	

Additional Comments:

Site Safety and Health Officer's Signature

11-22-17

Date

[1]If a deficiency is noted that cannot be immediately corrected, the SSHO will monitor the progress in correcting the deficiency and will document following:

- Date the deficiency was identified
- Description of the deficiency
- Name of the person responsible for correcting the deficiency
- Projected date of correction
- Actual date of correction.

HEALTH AND SAFETY ACTIVITY REPORT

Site: KAFB Well 106239 Location: Ridgecrest Dr

Weather Cond.: Sunny 70°F Onsite Hours: From 0630 To 1150

Changes in PPE Levels[1]	Work Operations	Reasons for Change
None		

Site Safety and Health Plan Violations	Corrective Action Specified	Corrective Action Taken [2](yes/no)
None		

Observations and Comments:
None

Completed by: Tyler Curley Date: 11-22-17
Site Health and Safety Supervisor

[1]Only SSHO may change PPE levels, using only criteria specified in APP/SSHP.
[2]If a deficiency is noted that cannot be immediately corrected, the SSHO will monitor the progress in correcting the deficiency and will document following:

- Date the deficiency was identified
- Description of the deficiency
- Name of the person responsible for correcting the deficiency
- Projected date of correction
- Actual date of correction.

From:	Curley, Tyler
To:	"Trent.Simpler@usace.army.mil"; "Amy.E.Sanchez@usace.army.mil"; "Carlos.F.Salazar@usace.army.mil"; "Linda.Dreeland@usace.army.mil"; "Mark.J.Phaneuf@usace.army.mil"
Cc:	Jercinovic, Devon; McKeage, Kevin; Morse, Earl; Bowman, Matthew
Subject:	Activity Report for KAFB Well 106239 Conveyance Line Installation 27 November 2017
Date:	Monday, November 27, 2017 7:15:24 PM
Attachments:	Daily Field Activities Summary Report.pdf Photos 11-27-17.pdf

---

Issues Today 27 Monday November 2017:

- It was discovered that the side penetrations built into the junction vault did not extend as high into the vault walls as planned. As a result, the vault will extend approximately 14-inches above grade instead of the proposed 6-inches.

Resolution of Issues:

- Soil shall be built up around the well vault until approximately 6-inches of concrete extends above the soil

Work Performed Today:

- Began excavation around 228 conveyance line
- Continued the reroute of the 228 communication line

Installation Completion to Date: 53%

Work Planned for 28 Nov 2017:

- Measure and weld flange end onto the conveyance line.
- Begin installation of junction vault
- Continue the reroute of the 228 communication line
- Begin installation of the pitless adapter and pump

Please let me know if you need additional information.

Tyler Curley, P.E.
EA Engineering, Science, and Technology, Inc., PBC
320 Gold Avenue, SW Suite 1300
Albuquerque, NM 87120
(505) 715-4422 work
(719) 688-9558 cell
tcurley@eaest.com

DAILY FIELD ACTIVITIES SUMMARY REPORT		
PROJECT NAME: KAFB Well 106239 Conveyance Line Installation		
Date: 11-27-17	Time Shift Beginning: 0630	Time Shift Ending:1500
Project Number: 62599DM01		Contract/Task Order No.:
Client: USACE		Report By: Tyler Curley
Contractor(s): RMCI		Project Manager: Devon Jercinovic
Design Manager:		Oversight Manager: Tyler Curley
Design Engineer: George Nemeth		Site Engineer: Tyler Curley
Weather: Sunny 70° F		Logbook Number: NA
Personnel Onsite:	**Name:**	**Reason for Being Onsite:**
EA	Tyler Curley Earl Morse	Construction/Safety Oversight Construction/Safety Oversight
RMCI	Jerry Patton Ed Hyde Felipe Hernandez Robert BeBault Jesus Moya Angel Castaneda Lorenzo Tena George Ingram	General Contractor
Wilson	Britt Crooks Jaime Perez	Electrical Contractor

Work Performed:

Planned Activities:

- Begin excavation around 228 conveyance line
- Begin installation of junction vault
- Continue the reroute of the 228 communication line

Completed Activities:

- Began excavation around 228 conveyance line
- Continued the reroute of the 228 communication line

Material Deliveries:

- None

Construction Quality Control Activities or Samples Collected:

- None

Observations or Possible Variations from Specifications:

- None

Anticipated Activities for the Following Day:

- Measure and weld flange end onto the conveyance line.
- Begin installation of junction vault
- Continue the reroute of the 228 communication line
- Begin installation of the pitless adapter and pump

Planned Material Deliveries: • None	
Contractor Reports, Manifests, Documents Reviewed and Logged:	
• None	
Report Completed By:	
Tyler Curley	Date: 27 November 2017

CAUTION
Open
Excavation
Beyond Fence

EA Engineering, Science, and Technology, Inc

Employee/Visitor Register and Safety Brief				
Date: 11-27-17				
Site Entry/Exit		Name (Printed)	Signature	Company
Time In	Time Out			
0630	1500	Tyler Curley		EA
0630		Lorenzo Tena	Lorenzo Tena	RMCI
6:30		Felipe Hernandez	Felipe Hernandez	RMCI
6:30		George Ingram		RMCI
6:30		Jerry Patton	Jerry Patton	RMCI
6:30		Angel Castaneda	Angel Castaneda	RMCI
6:30		Robert BeBault	Robert BeBault	RMCI
6:30	↓	Jesus Moya	Jesus Moya	RMCI
7:45	10:45	Earl Morse	Earl Morse	EA
615	925	Robert Arelle		RMCI
800	1500	Britt Crooks		Wilson
8:00	1500	Jaime Trevino Perez		wilson

EA ENGINEERING, SCIENCE AND TECHNOLOGY, INC.
SAFETY MEETING REPORT

Date: 11-27-17	**Time:** 0630	**Duration of meeting:** 10 min	**Project #** 62549.01
Location: ~~KAFB~~ KAFB Well 106239		**Task:** Conveyance Line Install	

Type of meeting: X Daily ___ Weekly ___ Monthly ___ Other:_____

Items/Issues discussed:

1. Trench safety
2. Moving heavy equipment
3. Pinch points
4. On base emergency #
5.

Attach minutes of safety meeting if taken.

Safety questions/issues raised:	Actions/Follow-up needed:
1. None	
2.	
3.	
4.	
5.	
6.	

Remarks:
None

Meeting conducted by:
Tyler Curley

EA Engineering, Science, and Technology, Inc.

DAILY SAFETY INSPECTION CHECKLIST
(TO BE COMPLETED EACH DAY OF CONSTRUCTION OR HTRW SITE ACTIVITIES)

Site: KAFB Well 106239
Location: Ridgecrest Dr
Project No.: 62599 DM01
Client: USACE

Prepared by SSHO: Tyler Curley
Project Manager: Devon Jercinovic
Date: 11-27-17

Rating	Y	N	N/A	Comments/Immediate Corrective Action[1]
Accident Prevention Plan (APP) and Site Safety and Health Plan (SSHP) General Requirements				
Are there new onsite personnel? • Did they receive pre-entry briefing and are their names recorded in field logbook or daily log? • Was the USACE PM made aware of the new personnel. • Required training and medical surveillance documentation received (e.g., 40-hr, 8 hr, etc.)?	✓	TO ✓		
Did personnel sign in/out of site?	✓			
Daily tailgate safety meetings conducted and documented?	✓			
Were new activities performed today? Were hazards identified, discussed during the daily safety tailgate, and incorporated into revised APP/SSHP?		✓		
New materials brought on site? MSDSs available?		✓		
Exclusion (EZ), Contamination Reduction (CRZ), and Support Zones (SZ) delineated and enforced?	✓			
General housekeeping measures in place to prevent hazards?	✓			
Emergency Planning				
Were there any changes to emergency contact names, telephone numbers, or hospital? If so, were site personnel made aware and was information distributed/reposted.		✓		
Adequate safety equipment inventory available?	✓			
Fire extinguisher available (monthly inspection of extinguisher will suffice)	✓			
Eyewash station(s) functioning and in place (weekly inspection of eye wash station will suffice)?	✓			
First aid supplies available (weekly inspection of first aid kit will suffice)?	✓			
Communication equipment readily available for emergencies?	✓			
Any reported accidents/incidents at this site? If so, were accident reporting procedures followed?		✓		
Air Monitoring				
Monitoring equipment specified in SSHP available and in working order? Air monitoring instrumentation for this site includes – check each if required/on site, note deficiencies in comments: • Combustible gas meter • Organic vapor analyzer • Contaminant specific analyzer for benzene (if total organic vapor concentrations exceed 0.5 ppm)	✓			
Monitoring equipment calibrated and calibration records	✓			

Y = Satisfactory or Yes; N = Unsatisfactory or No, N/A = Not applicable

Rating	Y	N	N/A	Comments/Immediate Corrective Action[1]
available?	✓			
Environmental and personnel monitoring performed as specified in SSHP?	✓			
PPE				
Proper dermal protection worn by EA and subcontracted employees when handling/ contacting hazardous chemicals or contaminated environmental media?	✓			
Required PPE (hard hats, safety boots / shoes, eye protection with side shields, hearing protection) being worn by EA and subcontracted employees?	✓			
PPE inspection completed by SSHO?	✓			
Drill Rig Operations				
Daily rig inspection completed? Any equipment problems?	✓			
Drill rigs/elevated equipment maintaining minimum 10-ft distance from energized (50 kV) overhead power lines?	✓			
Investigation-derived Waste (IDW)				
Wastes properly staged, secured, and labeled at end of day?			✓	

Additional Comments:

Site Safety and Health Officer's Signature

11-27-17

Date

[1]If a deficiency is noted that cannot be immediately corrected, the SSHO will monitor the progress in correcting the deficiency and will document following:

- Date the deficiency was identified
- Description of the deficiency
- Name of the person responsible for correcting the deficiency
- Projected date of correction
- Actual date of correction.

HEALTH AND SAFETY ACTIVITY REPORT

Site: KAFB Well 10c0239 Location: N/E Ridgecrest Dr

Weather Cond.: Sunny 70° Onsite Hours: From 0630 To 1500

Changes in PPE Levels[1]	Work Operations	Reasons for Change
None		

Site Safety and Health Plan Violations	Corrective Action Specified	Corrective Action Taken [2](yes/no)
None		

Observations and Comments:

None

Completed by: Tyler Curley Date: 1/27-17

Site Health and Safety Supervisor

[1]Only SSHO may change PPE levels, using only criteria specified in APP/SSHP.

[2]If a deficiency is noted that cannot be immediately corrected, the SSHO will monitor the progress in correcting the deficiency and will document following:

- Date the deficiency was identified
- Description of the deficiency
- Name of the person responsible for correcting the deficiency
- Projected date of correction
- Actual date of correction.

ENVIRONMENTAL MONITORING RECORD

SITE: KAFB Well 100239

PROJECT NO.: G03990M01

INSTRUMENT: Quest Noise Pro / Thermo dust meter

Time	Monitoring Location	Reading (dB / mg/m³)	Corrective Action Taken[a]
1000	Cal check	114.1 / 0.000	
TC ~~Site 1027~~	Site 26+35	70.6 / 0.021	

Comments:

(a) Corrective actions taken must be documented whenever readings at or above action levels are reached. Monitoring equipment and action levels are specified in Section 9.33 of the Accident Prevention Plan.

Recorded By: Tyler Curley
Site Health & Safety Officer

Date: 11-27-17

From:	Curley, Tyler
To:	"Amy.E.Sanchez@usace.army.mil"; "Trent.Simpler@usace.army.mil"; "Carlos.F.Salazar@usace.army.mil"; "Linda.Dreeland@usace.army.mil"; "Mark.J.Phaneuf@usace.army.mil"
Cc:	Jercinovic, Devon; McKeage, Kevin; Morse, Earl; Bowman, Matthew
Subject:	Activity Report for KAFB Well 106239 Conveyance Line Installation 28 November 2017
Date:	Tuesday, November 28, 2017 8:10:01 PM
Attachments:	Daily Field Activities Summary Report.pdf 023 CQM Daily Report 28NOV17.pdf Photos 11-28-17.pdf

---

Issues Today 28 Tuesday November 2017:

- The welder would not guarantee the weld on the pitless adapter because of the galvanized steel casing
- The pump was sized incorrectly and was rejected by EA.

Resolution of Issues:

- A 4-foot section of the galvanized steel well casing was cut and replaced with carbon steel. The pitless adapter was installed on the carbon steel
- Due to time constraints on the delivery of the correct pump, USACE was contacted to discuss pump installation. Per discussion with USACE, a suitable replacement pump was selected and was ordered for next day delivery

Work Performed Today:

- Measured and welded the flange end onto the conveyance line
- Continue the reroute of the 228 communication line
- Performed density testing on the junction vault subgrade
- Installed the pitless adapter

Installation Completion to Date: 54%

Work Planned for the Rest of the Week:

- Begin pump installation
- Prep for pressure testing
- Continue the reroute of the 228 communication line
- Pneumatically test containment line (Wednesday/Thursday)
- Hydrostatically test the carrier line (Wednesday/Thursday)
- Drain the 228 conveyance line (Thursday)
- Cut and splice into the 228 conveyance line (Thursday/Friday)
- Junction vault installation (Friday)

Please let me know if you need additional information.

Tyler Curley, P.E.
EA Engineering, Science, and Technology, Inc., PBC
320 Gold Avenue, SW Suite 1300
Albuquerque, NM 87120
(505) 715-4422 work
(719) 688-9558 cell
tcurley@eaest.com

DAILY FIELD ACTIVITIES SUMMARY REPORT		
PROJECT NAME: KAFB Well 106239 Conveyance Line Installation		
Date: 11-28-17	Time Shift Beginning: 0630	Time Shift Ending:1630
Project Number: 62599DM01		Contract/Task Order No.:
Client: USACE		Report By: Tyler Curley
Contractor(s): RMCI		Project Manager: Devon Jercinovic
Design Manager:		Oversight Manager: Tyler Curley
Design Engineer: George Nemeth		Site Engineer: Tyler Curley
Weather: Sunny 70° F		Logbook Number: NA
Personnel Onsite:	**Name:**	**Reason for Being Onsite:**
EA	Tyler Curley Earl Morse Kevin McKeage	Construction/Safety Oversight Construction/Safety Oversight CQM
RMCI	Jerry Patton Ed Hyde Felipe Hernandez Robert BeBault Jesus Moya Angel Castaneda Lorenzo Tena George Ingram	General Contractor
CA 2 Testing	Daniel Marquez	Density Testing
Wilson	Britt Crooks Jaime Perez	Electrical Contractor
Techsas	Ed Butler	Instrumentation Contractor
Cascade	Guy Hanninen Traves McClanahan	Pump Installation

Work Performed:

Planned Activities:

- Measure and weld flange end onto the conveyance line
- Begin installation of junction vault
- Continue the reroute of the 228 communication line
- Begin installation of the pitless adapter and pump

Completed Activities:

- Measured and welded the flange end onto the conveyance line
- Continue the reroute of the 228 communication line
- Performed density testing on the junction vault subgrade
- Installed the pitless adapter

Material Deliveries:

- Well components

Construction Quality Control Activities or Samples Collected:

- Material inspection, density testing

Observations or Possible Variations from Specifications:

- The welder would not guarantee the weld on the pitless adapter because of the galvanized steel casing, as a result a 4-foot section of the galvanized steel well casing was cut and replaced with carbon steel.
- The pump was sized incorrectly and was rejected by EA. Due to time constraints on the delivery of the correct pump, USACE was contacted to discuss pump installation. Per discussion with USACE, a suitable replacement pump was selected and was ordered for next day delivery.

Anticipated Activities for the Following Day:

- Begin pump installation
- Prep for pressure testing
- Continue the reroute of the 228 communication line
- Pneumatically test containment line (Wednesday/Thursday)
- Hydrostatically test the carrier line (Wednesday/Thursday)
- Drain the 228 conveyance line (Thursday)
- Cut and splice into the 228 conveyance line (Thursday/Friday)
- Junction vault installation (Friday)

Planned Material Deliveries:

- None

Contractor Reports, Manifests, Documents Reviewed and Logged:

- None

Report Completed By:

Tyler Curley	Date: 28 November 2017

DAILY REPORT

(ATTACH ADDITIONAL SHEETS IF NECESSARY)

CONTRACT NAME:	Kirtland AFB Bulk Fuels Facility Expansion of Dissolved Plume GWTS Design	REPORT NO:	023
CONTRACT NUMBER:	W912DR-12-D-0006	REPORT DATE:	28 NOV 17
REVISION NUMBER:	-	REVISION DATE:	-
TASK ORDER NUMBER:	DM01	PROJECT NAME / LOCATION:	Kirtland BFF
PROJECT NUMBER:	62599DM01	PROJECT DESCRIPTION:	Installation of KAFB-106239 Conveyance Line
PROJECT MANAGER:	Devon Jercinovic	FIELD QUALITY MANAGER:	Kevin McKeage
CONSTRUCTION MANAGER:	Tyler Curley	SITE SAFETY MANAGER:	Earl Morse

AM WEATHER:	Partly Cloudy Cool	PM WEATHER:	Clear Warm	MAX TEMP (F):	62		

SUMMARY OF WORK PERFORMED TODAY

CQM Inspection of Compaction and Well components.

HEALTH AND SAFETY REPORT

SAFETY ACTIONS TAKEN TODAY/SAFETY INSPECTIONS CONDUCTED (Include Observations, Safety Violations, Corrective Instructions Given, Corrective Actions Taken, and Results of Safety Inspections Conducted:

See Construction Manager's Daily Report

TAILGATE TOPICS:

"

SAFE BEHAVIOR OBSERVATIONS/SELF-ASSESSMENTS:

"

OPERATIONS/PRODUCTION REPORT

WORK FORCE – CONTRACTOR AND SUBCONTRACTOR

Company	Cumulative Total of Work Hours From Previous Report	Total Hours Today	Total Work Hours From Start of Injection Event
See CMS Daily Report			

EQUIPMENT ON HAND

Description of Equipment	Make/Model/ Manufacturer	Equipment ID Number	Inspection Performed By
Water Truck	Colorado Kenworth	4610	Robert Peterson II
Loader	Komatsu PC200	1107	Jesus Moya
~~Excavator~~			
HDPE Welder x2	McElroy Tracstar	8617, 8618	Jerry Porter
Backhoe	John Deere 310SJ	1415	Jesus Moya

COMMENTS (acceptance status, inspection findings, etc.):

OK

WORK AND/OR TESTS ACCOMPLISHED OR IN PROGRESS

Performed Work/Test for Today: See CM's Daily Report

Planned Work/Test for Tomorrow: "

Planned Work/Test for Next Week: "

CHANGED CONDITIONS/DELAY/CONFLICTS ENCOUNTERED (List any conflicts with the project [i.e., scope of work and/or drawings], delays to the project attributable to site and weather conditions, etc. "

VISITORS AND DISCUSSIONS: "

QUALITY CONTROL REPORT

MATERIALS DELIVERED TO JOB SITE

Quantity/Volume/ Weight	Description of Materials Received	Make/Model/ Manufacturer	Material Lot Number	Inspection Performed By
1, 2, 1	Well Seal, Check Valves, Pitless Adapter	Pacific Hydro, Flomatic, Baker		TC
500 ft	Submersible Pump Cable	Service Wire Co.	—	TC
60 ft	304 Stainless Steel Drop Pipe 5"	—	—	KM
440 ft, 720 ft	3" Galvanized Drop pipe, 1 1/4" Drop pipe	—	—	KM

COMMENTS (acceptance status, inspection findings, etc.): Pump end and motor were not accepted.

INSPECTIONS PERFORMED

Task/Activity Inspected	Inspection Performed	Findings
None		

TESTS PERFORMED

Task/Activity Tested	Test Performed	Test Results (Pass/Fail) - Criteria
Compaction	Compaction 26+35	Pass for 96.2%, req 95.5%

QUALITY ISSUES AND RESOLUTIONS: The pump and pump motor was not accepted.

SUBMITTALS INSPECTION / REVIEW

Submittal No.	Submittal Description	Specification/Plan Reference	Submittal Approved?		Comment/Reason/Action
NA	Daily Report	_	Yes ☐	No ☐	Pending
NA	SBO	_	Yes ☐	No ☐	Pending
NA	PTSP	_	Yes ☐	No ☐	Pending

REGULATORY COMPLIANCE REPORT							
PERMIT INSPECTIONS PERFORMED: None							
WASTE ACCUMULATION/STOCKPILE AREA INSPECTION							
Inspection Performed By:	None			Signature of Inspector:			
Accumulation / Stockpile Area Inspected:							
No of Bins:		No of Tankers		No of Roll-Off Boxes:		No. of Tanks	
Inspection Results: NA							
GENERAL COMMENTS							
General Comments: (rework, directives, etc.): All items except for Pump and Pump motor accepted. Revised submittal will be provided tomorrow for Pump + motor.							
ATTACHMENTS							
List of Attachments: (examples, as applicable: submittals, meeting minutes, safety meeting minutes, COCs, weight tickets, manifests, profiles, rework item list, RFIs, DCNs, photographs, etc.): Photo log							
NOTE: Write all entries legibly in ink. Line out all unused portions or designate as "not applicable". Preparer signs first and last name on each completed daily report. This form may be filled out electronically and signed electronically.				PREPARER'S SIGNATURE		DATE: 28NOV17	

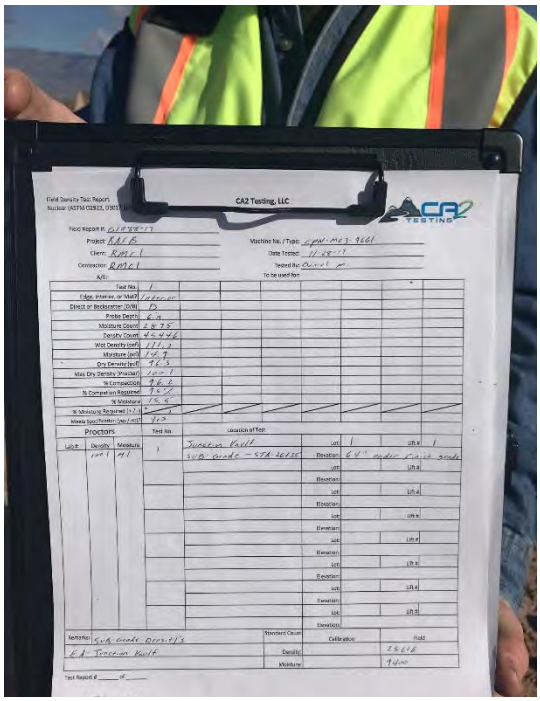

Location: Station 26+35
Description: Compaction Test Results (Formal copy to be submitted at a later date)
Date: 28 November 2017 Direction: East

Location: Station 1+00
Description: Well Seal
Date: 28 November 2017 Direction: Down

Location: Station 1+00
Description: Submersible Pump Cable
Date: 28 November 2017 Direction: Down

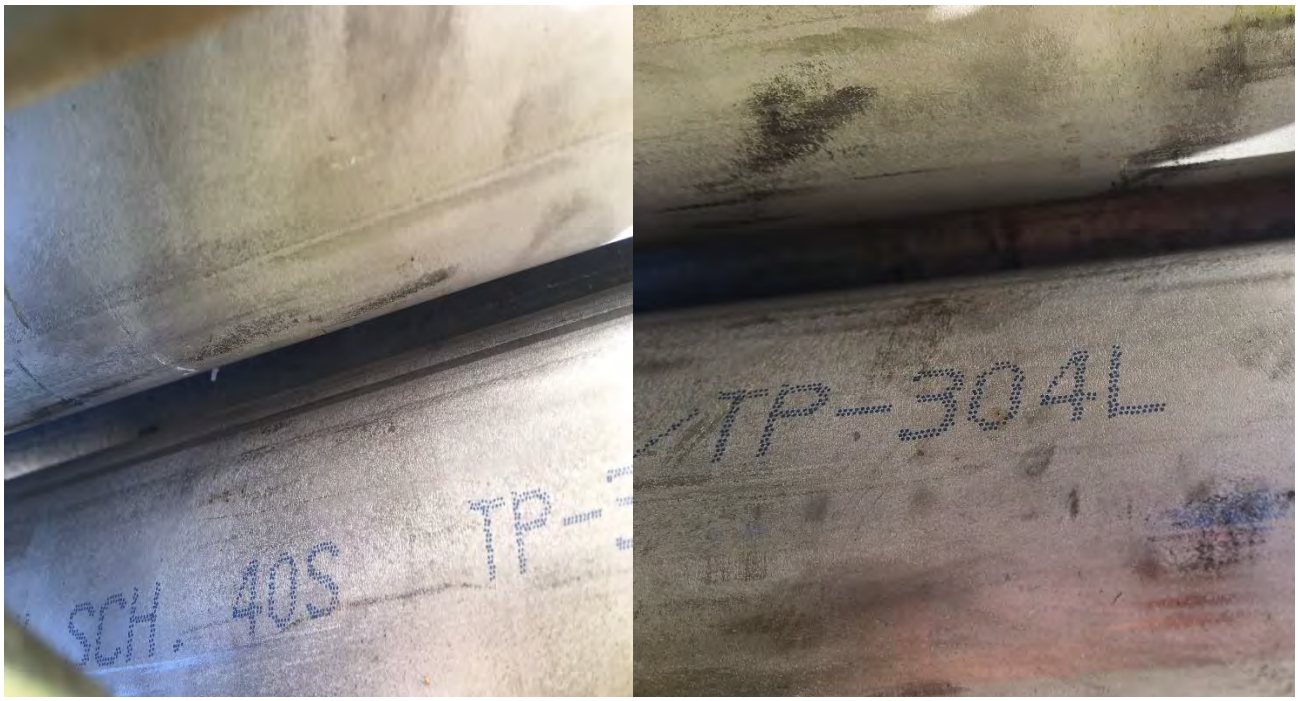

Location: Station 1+00
Description: 304 Stainless Steel Drop Pipe
Date: 28 November 2017 Direction: Down

Location: Station 1+00
Description: Galvanized Drop Pipe
Date: 28 November 2017 Direction: Down

Location: Station 1+00
Description: Pump End (75 GPM, 23 Stage, 25 HP)
Date: 28 November 2017 Direction: East

Location: Station 1+00
Description: Pump Motor (25 HP, 18.5 KW, 460V)
Date: 28 November 2017 Direction: East

Location: Station 1+00
Description: 1 ¼ inch Drop Pipe
Date: 28 November 2017 Direction: East

Location: Station 1+00
Description: 3 inch 80DI-VFD Check Valves
Date: 28 November 2017 Direction: Down

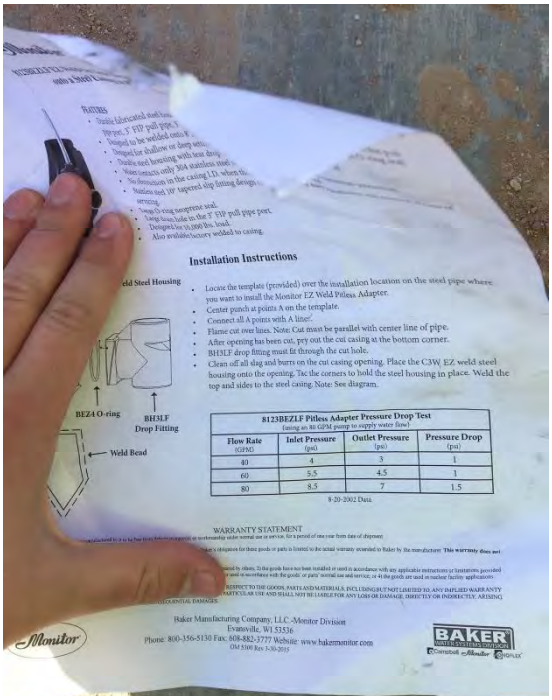

Location: Station 1+00
Description: Pitless Adapter Specification Sheet
Date: 28 November 2017 Direction: Down

EA Engineering, Science, and Technology, Inc

Employee/Visitor Register and Safety Brief				
Date: 11-28-17				
Site Entry/Exit		Name (Printed)	Signature	Company
Time In	Time Out			
0630	1645	Tyler Curley		EA
6:30	1500	George INGRAM		RMCI
6:30	↓	Jesus Moya		RMCI
6:30		Felipe Ortiz		RMCI
6:30		Angel Castaneda	Angel Castaneda	RMCI
6:30		Jerry Patton		RMCI
6:30		Robert BeBault		RMCI
6:30		Lorenzo Tena		RMCI
6:30	↓	ED HYDE		RMCI
7:00	1645	TRAVIS McClanahan		CASCADE
7:00	↓	ED BUTLER		TECHSAS
7:00	↓	Guy Hannigan		Cascade
7:00	1530	Frank Morse		EA
7:00	1500	Britt Crooks		Wilson
7:00	↓	Jaime Javier Ruiz		wilson electric
0630	0945	William Brand		377 SFG/LGT

EA ENGINEERING, SCIENCE AND TECHNOLOGY, INC.
SAFETY MEETING REPORT

Date: 11-28-17	**Time:** 0630	**Duration of meeting:** 10 min	**Project #** 069201401
Location: KAFB Well 106739		**Task:** Conveyance Line Install	

Type of meeting: X Daily ___ Weekly ___ Monthly ___ Other: _____

Items/Issues discussed:

1. Pinch points
2. Hot points
3. Crush hazards
4. Trench safety
5.

Attach minutes of safety meeting if taken.

Safety questions/issues raised:	Actions/Follow-up needed:
1. None	
2.	
3.	
4.	
5.	
6.	

Remarks: None

Meeting conducted by:
Tyler Curley

EA Engineering, Science, and Technology, Inc.

DAILY SAFETY INSPECTION CHECKLIST (TO BE COMPLETED EACH DAY OF CONSTRUCTION OR HTRW SITE ACTIVITIES)

Site: KAFB Well 106239
Location: Ridgecrest Dr.
Project No.: 62599 DM01
Client: USACE

Prepared by SSHO: Tyler Curley
Project Manager: Devon Jercinovic
Date: 11-28-17

Rating	Y	N	N/A	Comments/Immediate Corrective Action[1]
Accident Prevention Plan (APP) and Site Safety and Health Plan (SSHP) General Requirements				
Are there new onsite personnel? • Did they receive pre-entry briefing and are their names recorded in field logbook or daily log? • Was the USACE PM made aware of the new personnel. • Required training and medical surveillance documentation received (e.g., 40-hr, 8 hr, etc.)?	✓			
Did personnel sign in/out of site?	✓			
Daily tailgate safety meetings conducted and documented?	✓			
Were new activities performed today? Were hazards identified, discussed during the daily safety tailgate, and incorporated into revised APP/SSHP?	✓			
New materials brought on site? MSDSs available?		✓		
Exclusion (EZ), Contamination Reduction (CRZ), and Support Zones (SZ) delineated and enforced?	✓			
General housekeeping measures in place to prevent hazards?	✓			
Emergency Planning				
Were there any changes to emergency contact names, telephone numbers, or hospital? If so, were site personnel made aware and was information distributed/reposted.	~~✓~~	✓		
Adequate safety equipment inventory available?	✓			
Fire extinguisher available (monthly inspection of extinguisher will suffice)	✓			
Eyewash station(s) functioning and in place (weekly inspection of eye wash station will suffice)?	✓			
First aid supplies available (weekly inspection of first aid kit will suffice)?	✓			
Communication equipment readily available for emergencies?	✓			
Any reported accidents/incidents at this site? If so, were accident reporting procedures followed?		✓		
Air Monitoring				
Monitoring equipment specified in SSHP available and in working order? Air monitoring instrumentation for this site includes – check each if required/on site, note deficiencies in comments: • Combustible gas meter • Organic vapor analyzer • Contaminant specific analyzer for benzene (if total organic vapor concentrations exceed 0.5 ppm)	✓			
Monitoring equipment calibrated and calibration records	✓			

Y = Satisfactory or Yes; N = Unsatisfactory or No, N/A = Not applicable

Rating	Y	N	N/A	Comments/Immediate Corrective Action[1]
available?				
Environmental and personnel monitoring performed as specified in SSHP?	✓			
PPE				
Proper dermal protection worn by EA and subcontracted employees when handling/ contacting hazardous chemicals or contaminated environmental media?	✓			
Required PPE (hard hats, safety boots / shoes, eye protection with side shields, hearing protection) being worn by EA and subcontracted employees?	✓			
PPE inspection completed by SSHO?	✓			
Drill Rig Operations				
Daily rig inspection completed? Any equipment problems?	✓			
Drill rigs/elevated equipment maintaining minimum 10-ft distance from energized (50 kV) overhead power lines?	✓			
Investigation-derived Waste (IDW)				
Wastes properly staged, secured, and labeled at end of day?			✓	

Additional Comments:

Site Safety and Health Officer's Signature

11-28-17

Date

[1]If a deficiency is noted that cannot be immediately corrected, the SSHO will monitor the progress in correcting the deficiency and will document following:

- Date the deficiency was identified
- Description of the deficiency
- Name of the person responsible for correcting the deficiency
- Projected date of correction
- Actual date of correction.

HEALTH AND SAFETY ACTIVITY REPORT

Site: KAFB Well 106739 Location: Ridgecrest Dr

Weather Cond.: Sunny 60°F Onsite Hours: From 0630 To 1645

Changes in PPE Levels[1]	Work Operations	Reasons for Change
None		

Site Safety and Health Plan Violations	Corrective Action Specified	Corrective Action Taken [2](yes/no)
None		

Observations and Comments:

None

Completed by: Tyler Cutler Date: 11-28-17

Site Health and Safety Supervisor

[1]Only SSHO may change PPE levels, using only criteria specified in APP/SSHP.

[2]If a deficiency is noted that cannot be immediately corrected, the SSHO will monitor the progress in correcting the deficiency and will document following:

- Date the deficiency was identified
- Description of the deficiency
- Name of the person responsible for correcting the deficiency
- Projected date of correction
- Actual date of correction.

From:	Curley, Tyler
To:	"Trent.Simpler@usace.army.mil"; "Amy.E.Sanchez@usace.army.mil"; "Carlos.F.Salazar@usace.army.mil"; "Linda.Dreeland@usace.army.mil"; "Mark.J.Phaneuf@usace.army.mil"
Cc:	Jercinovic, Devon; McKeage, Kevin; Morse, Earl; Bowman, Matthew; Ferrari, Peter
Subject:	Activity Report for KAFB Well 106239 Conveyance Line Installation 29 November 2017
Date:	Wednesday, November 29, 2017 7:31:26 PM
Attachments:	Daily Field Activities Summary Report.pdf Photos 11-29-17.pdf 024 CQM Daily Report 29NOV17.pdf

---

Issues Today 29 Tuesday November 2017:

- None

Resolution of Issues:

- None

Work Performed Today:

- Conducted hydrostatic pressure testing on the carrier line
- Continued the reroute of the 228 communication line
- Installed sacrificial zinc anode on the stainless steel drop pipe
- Prepped for the pneumatic pressure test

Installation Completion to Date: 57%

Work Planned for the Rest of the Week:

- Continue pump installation
- Continue the reroute of the 228 communication line
- Pneumatically test containment line (Thursday)
- Drain the 228 conveyance line (Thursday)
- Cut and splice into the 228 conveyance line (Thursday/Friday)
- Junction vault installation (Friday)

Please let me know if you need additional information.

Tyler Curley, P.E.
EA Engineering, Science, and Technology, Inc., PBC
320 Gold Avenue, SW Suite 1300
Albuquerque, NM 87120
(505) 715-4422 work
(719) 688-9558 cell
tcurley@eaest.com

DAILY FIELD ACTIVITIES SUMMARY REPORT		
PROJECT NAME: KAFB Well 106239 Conveyance Line Installation		
Date: 11-29-17	Time Shift Beginning: 0630	Time Shift Ending:1750
Project Number: 62599DM01		Contract/Task Order No.:
Client: USACE		Report By: Tyler Curley
Contractor(s): RMCI		Project Manager: Devon Jercinovic
Design Manager:		Oversight Manager: Tyler Curley
Design Engineer: George Nemeth		Site Engineer: Tyler Curley
Weather: Sunny 65° F		Logbook Number: NA
Personnel Onsite:	**Name:**	**Reason for Being Onsite:**
EA	Tyler Curley Earl Morse Pete Ferrari Kevin McKeage	Construction/Safety Oversight Construction/Safety Oversight Construction/Safety Oversight CQM
RMCI	Jerry Patton Ed Hyde Phillip Johnson Felipe Hernandez Robert BeBault Jesus Moya Angel Castaneda Lorenzo Tena George Ingram	General Contractor
Wilson	Britt Crooks Jaime Perez	Electrical Contractor
Techsas	Ed Butler	Instrumentation Contractor
Cascade	Guy Hanninen Traves McClanahan	Pump Installation

Work Performed:

Planned Activities:

- Begin pump installation
- Prep for pressure testing
- Continue the reroute of the 228 communication line
- Pneumatically test containment line (Wednesday/Thursday)
- Hydrostatically test the carrier line (Wednesday/Thursday)

Completed Activities:

- Conducted hydrostatic pressure testing on the carrier line
- Continued the reroute of the 228 communication line
- Installed sacrificial zinc anode on the stainless steel drop pipe
- Prepped for the pneumatic pressure test

Material Deliveries:

- Replacement pump and motor

Construction Quality Control Activities or Samples Collected:

- Material inspection

Observations or Possible Variations from Specifications:
• None

Anticipated Activities for the Following Day:	
• Continue pump installation • Continue the reroute of the 228 communication line • Pneumatically test containment line (Thursday) • Drain the 228 conveyance line (Thursday) • Cut and splice into the 228 conveyance line (Thursday/Friday) • Junction vault installation (Friday) **Planned Material Deliveries:** • None	
Contractor Reports, Manifests, Documents Reviewed and Logged:	
• None	
Report Completed By:	
Tyler Curley	Date: 29 November 2017

DEWALT

DEWALT

PROTECTIVE NETTING

DAILY REPORT

(ATTACH ADDITIONAL SHEETS IF NECESSARY)

CONTRACT NAME:	Kirtland AFB Bulk Fuels Facility Expansion of Dissolved Plume GWTS Design	REPORT NO:	024
CONTRACT NUMBER:	W912DR-12-D-0006	REPORT DATE:	29 NOV 17
REVISION NUMBER:	-	REVISION DATE:	-
TASK ORDER NUMBER:	DM01	PROJECT NAME / LOCATION:	Kirtland BFF
PROJECT NUMBER:	62599DM01	PROJECT DESCRIPTION:	Installation of KAFB-106239 Conveyance Line
PROJECT MANAGER:	Devon Jercinovic	FIELD QUALITY MANAGER:	Kevin McKenzie
CONSTRUCTION MANAGER:	Tyler Curley	SITE SAFETY MANAGER:	Earl Morse

AM WEATHER:	Clear Cold	PM WEATHER:	Partly Cloudy Cool	MAX TEMP (F):	58		

SUMMARY OF WORK PERFORMED TODAY

CQM Inspection of pump end and motor, hydrostatic pressure testing

HEALTH AND SAFETY REPORT

SAFETY ACTIONS TAKEN TODAY/SAFETY INSPECTIONS CONDUCTED (Include Observations, Safety Violations, Corrective Instructions Given, Corrective Actions Taken, and Results of Safety Inspections Conducted:

See Construction Manager's Daily Report

TAILGATE TOPICS:

"

SAFE BEHAVIOR OBSERVATIONS/SELF-ASSESSMENTS: "

OPERATIONS/PRODUCTION REPORT

WORK FORCE – CONTRACTOR AND SUBCONTRACTOR

Company	Cumulative Total of Work Hours From Previous Report	Total Hours Today	Total Work Hours From Start of Injection Event
See CM's Daily Report			

EQUIPMENT ON HAND

Description of Equipment	Make/Model/ Manufacturer	Equipment ID Number	Inspection Performed By
Water truck	Colorado Kenworth	4610	Robert Schmidt
Loader	Komatsu PC200	1107	Jesus Moya
HDPE Welder (2x)	McElroy Trasfer	8617, 8618	Jerry Patton
Backhoe	John Deere 310J	1415	Jesus Moya
Hydrostatic pressure pump	Honda 160	8397	Jerry Patton
Pulling Rig	Cascade Truckmount	-	Guy Hannivan

COMMENTS (acceptance status, inspection findings, etc.):

OK

WORK AND/OR TESTS ACCOMPLISHED OR IN PROGRESS

Performed Work/Test for Today: See CM's Daily Report

Planned Work/Test for Tomorrow: "

Planned Work/Test for Next Week: "

CHANGED CONDITIONS/DELAY/CONFLICTS ENCOUNTERED (List any conflicts with the project [i.e., scope of work and/or drawings], delays to the project attributable to site and weather conditions, etc. "

VISITORS AND DISCUSSIONS: "

QUALITY CONTROL REPORT

MATERIALS DELIVERED TO JOB SITE

Quantity/Volume/ Weight	Description of Materials Received	Make/Model/ Manufacturer	Material Lot Number	Inspection Performed By
1	Pump end 100SR25F66-186?	Franklin Electric	17699-05-26638	KM
1	Pump motor MS6000QFT40	Grundfos	78357217	KM

COMMENTS (acceptance status, inspection findings, etc.): OK, meets accepted submittal

INSPECTIONS PERFORMED

Task/Activity Inspected	Inspection Performed	Findings
Hydrostatic Testing	Visual	OK
Anode Installation	Visual	OK

TESTS PERFORMED

Task/Activity Tested	Test Performed	Test Results (Pass/Fail) - Criteria Forms
Hydrostatic Pressure	Hydrostatic Pressure on 4" HDPE Line	Pass (Formal Test ~~Results~~ to be provided tomorrow)

QUALITY ISSUES AND RESOLUTIONS: None

SUBMITTALS INSPECTION / REVIEW

Submittal No.	Submittal Description	Specification/Plan Reference	Submittal Approved?		Comment/Reason/Action
NA	Daily Report	-	Yes ☐	No ☐	Pending
NA	SBO	-	Yes ☐	No ☐	Pending
NA	PTSP	-	Yes ☐	No ☐	Pending

REGULATORY COMPLIANCE REPORT							
PERMIT INSPECTIONS PERFORMED: None							
WASTE ACCUMULATION/STOCKPILE AREA INSPECTION							
Inspection Performed By:	NA			Signature of Inspector:			
Accumulation / Stockpile Area Inspected:							
No of Bins:		No of Tankers		No of Roll-Off Boxes:		No. of Tanks	
Inspection Results: NA							
GENERAL COMMENTS							
General Comments: (rework, directives, etc.): Test Passed, Materials Accepted							
ATTACHMENTS							
List of Attachments: (examples, as applicable: submittals, meeting minutes, safety meeting minutes, COCs, weight tickets, manifests, profiles, rework item list, RFIs, DCNs, photographs, etc.): Photo log							
NOTE: Write all entries legibly in ink. Line out all unused portions or designate as "not applicable". Preparer signs first and last name on each completed daily report. This form may be filled out electronically and signed electronically.				PREPARER'S SIGNATURE		DATE: 29NOV17	

Location: Station 1+00
Description: Pump Motor
Date: 29 November 2017 Direction: East

Location: Station 1+00
Description: Pump End
Date: 29 November 2017 Direction: East

Location: Station 1+00
Description: Hydrostatic Pressure Testing Setup
Date: 29 November 2017 Direction: Southwest

Location: Station 1+00
Description: Hydrostatic Pressure Testing Setup (Note small leak at female thread on flange)
Date: 29 November 2017 Direction: Down

Location: Station 1+00
Description: Pressure Reading at 1629
Date: 29 November 2017 Direction: Down

Location: Station 1+00
Description: Pressure Reading at 1729
Date: 29 November 2017 Direction: Down

EA Engineering, Science, and Technology, Inc

Employee/Visitor Register and Safety Brief

Date: 11-29-17

Site Entry/Exit		Name (Printed)	Signature	Company
Time In	Time Out			
0630	17:50	Tyler Corley		EA
6:30	↓	George INgram		RMC I
6:30		Robert BoBault		RMCI
6:30		Felipe H		RMCI
6:30	↓	Jesus Moya		RMCI
6:30	15:30	Angel Castaneda	Angel Castaneda	RMCI
6:30	15:30	Lorenzo Tena		RMCI
6 30	15:00	ED Agee		RMCI
6:30	17:50	↓ Jay Patton		RMCI
8:15	14:30	Jaime Tavio Perez		wilson
8:15	14:30	Britt Crooks		W. LSON
10:30	11:30	Phillip Johnson		RMCI
1130	11:40	Amy S		USACE
1130	↓	Todd C.		USACE
1130	↓	Gene J.		USACE
12:15	17:30	Earl Marie		EA
1315	17:50	Kevin McKaye		EA
1330	17:30	ED Burka		TRATSAS
1330	↓	Guy Hannigan	Guy Hannigan	Cascade
1330	↓	TRAVES McClanahan		CASCADE

EA ENGINEERING, SCIENCE AND TECHNOLOGY, INC.
SAFETY MEETING REPORT

Date: 11-29-17	**Time:** 0630	**Duration of meeting:** 10 min	**Project #** 65599.01.401
Location: KAFB well 106239		**Task:** Conveyance Line Install	

Type of meeting: X **Daily** ____ **Weekly** ____ **Monthly** ____ **Other:**_____

Items/Issues discussed:

1. Traffic
2. Slip trips, falls
3. Pressurized pipe
4.
5.

Attach minutes of safety meeting if taken.

Safety questions/issues raised:	**Actions/Follow-up needed:**
1. None	
2.	
3.	
4.	
5.	
6.	

Remarks: None

Meeting conducted by:

Tyler Curley

EA Engineering, Science, and Technology, Inc.

DAILY SAFETY INSPECTION CHECKLIST (TO BE COMPLETED EACH DAY OF CONSTRUCTION OR HTRW SITE ACTIVITIES)

Site: KAFB Well 100239
Location: Ridgecrest Dr.
Project No.: G3599DM01
Client: USACE

Prepared by SSHO: Tyler Curley
Project Manager: Devon Jerkovic
Date: 11-29-17

Rating	Y	N	N/A	Comments/Immediate Corrective Action[1]
Accident Prevention Plan (APP) and Site Safety and Health Plan (SSHP) General Requirements				
Are there new onsite personnel? • Did they receive pre-entry briefing and are their names recorded in field logbook or daily log? • Was the USACE PM made aware of the new personnel. • Required training and medical surveillance documentation received (e.g., 40-hr, 8 hr, etc.)?		✓		
Did personnel sign in/out of site?	✓			
Daily tailgate safety meetings conducted and documented?	✓			
Were new activities performed today? Were hazards identified, discussed during the daily safety tailgate, and incorporated into revised APP/SSHP?	✓			
New materials brought on site? MSDSs available?		✓		
Exclusion (EZ), Contamination Reduction (CRZ), and Support Zones (SZ) delineated and enforced?	✓			
General housekeeping measures in place to prevent hazards?	✓			
Emergency Planning				
Were there any changes to emergency contact names, telephone numbers, or hospital? If so, were site personnel made aware and was information distributed/reposted.		✓		
Adequate safety equipment inventory available?	✓			
Fire extinguisher available (monthly inspection of extinguisher will suffice)	✓			
Eyewash station(s) functioning and in place (weekly inspection of eye wash station will suffice)?	✓			
First aid supplies available (weekly inspection of first aid kit will suffice)?	✓			
Communication equipment readily available for emergencies?	✓			
Any reported accidents/incidents at this site? If so, were accident reporting procedures followed?		✓		
Air Monitoring				
Monitoring equipment specified in SSHP available and in working order? Air monitoring instrumentation for this site includes – check each if required/on site, note deficiencies in comments: • Combustible gas meter • Organic vapor analyzer • Contaminant specific analyzer for benzene (if total organic vapor concentrations exceed 0.5 ppm)	✓			
Monitoring equipment calibrated and calibration records				

Y = Satisfactory or Yes; N = Unsatisfactory or No, N/A = Not applicable

Rating	Y	N	N/A	Comments/Immediate Corrective Action[1]
available?				
Environmental and personnel monitoring performed as specified in SSHP?	✓			
PPE				
Proper dermal protection worn by EA and subcontracted employees when handling/ contacting hazardous chemicals or contaminated environmental media?	✓			
Required PPE (hard hats, safety boots / shoes, eye protection with side shields, hearing protection) being worn by EA and subcontracted employees?	✓			
PPE inspection completed by SSHO?	✓			
Drill Rig Operations				
Daily rig inspection completed? Any equipment problems?	✓			
Drill rigs/elevated equipment maintaining minimum 10-ft distance from energized (50 kV) overhead power lines?	✓			
Investigation-derived Waste (IDW)				
Wastes properly staged, secured, and labeled at end of day?			✓	

Additional Comments:

Site Safety and Health Officer's Signature

11-29-17

Date

[1]If a deficiency is noted that cannot be immediately corrected, the SSHO will monitor the progress in correcting the deficiency and will document following:

- Date the deficiency was identified
- Description of the deficiency
- Name of the person responsible for correcting the deficiency
- Projected date of correction
- Actual date of correction.

HEALTH AND SAFETY ACTIVITY REPORT

Site: KAFB Well 100239 Location: Ridgecrest Dr

Weather Cond.: Sunny 65° Onsite Hours: From 0630 To 1750

Changes in PPE Levels[1]	Work Operations	Reasons for Change
None		

Site Safety and Health Plan Violations	Corrective Action Specified	Corrective Action Taken [2](yes/no)
None		

Observations and Comments:

None

Completed by: _____ Date:

Site Health and Safety Supervisor

[1]Only SSHO may change PPE levels, using only criteria specified in APP/SSHP.

[2]If a deficiency is noted that cannot be immediately corrected, the SSHO will monitor the progress in correcting the deficiency and will document following:

- Date the deficiency was identified
- Description of the deficiency
- Name of the person responsible for correcting the deficiency
- Projected date of correction
- Actual date of correction.

From:	Curley, Tyler
To:	"Trent.Simpler@usace.army.mil"; "Amy.E.Sanchez@usace.army.mil"; "Carlos.F.Salazar@usace.army.mil"; "Linda.Dreeland@usace.army.mil"; "Mark.J.Phaneuf@usace.army.mil"
Cc:	Jercinovic, Devon; McKeage, Kevin; Morse, Earl; Bowman, Matthew; Ferrari, Peter
Subject:	Activity Report for KAFB Well 106239 Conveyance Line Installation 30 November 2017
Date:	Thursday, November 30, 2017 8:26:21 PM
Attachments:	Daily Field Activities Summary Report.pdf Photos 11-30-17.pdf 025 CQM Daily Report 30NOV17.pdf

---

Issues Today 30 Thursday November 2017:

- Hydrostatic pressure testing of the carrier line was rejected due to a leak along a flange end cap

Resolution of Issues:

- The carrier line shall be retested

Work Performed Today:

- Conducted pneumatic pressure testing on the containment line
- Completed the reroute of the 228 communication line
- Completed pump installation
- Drained conveyance line for well 228
- Began the tie in on the 228 conveyance

Installation Completion to Date: 60%

Work Planned for Tomorrow 30 November 2017:

- Hydrostatically pressure test the carrier line
- Cut and splice into the 228 conveyance line
- Junction vault installation

Please let me know if you need additional information.

Tyler Curley, P.E.
EA Engineering, Science, and Technology, Inc., PBC
320 Gold Avenue, SW Suite 1300
Albuquerque, NM 87120
(505) 715-4422 work
(719) 688-9558 cell
tcurley@eaest.com

DAILY FIELD ACTIVITIES SUMMARY REPORT		
PROJECT NAME: KAFB Well 106239 Conveyance Line Installation		
Date: 11-30-17	Time Shift Beginning: 0630	Time Shift Ending:1750
Project Number: 62599DM01		Contract/Task Order No.:
Client: USACE		Report By: Tyler Curley
Contractor(s): RMCI		Project Manager: Devon Jercinovic
Design Manager:		Oversight Manager: Tyler Curley
Design Engineer: George Nemeth		Site Engineer: Tyler Curley
Weather: Sunny 60° F		Logbook Number: NA
Personnel Onsite:	**Name:**	**Reason for Being Onsite:**
EA	Tyler Curley Earl Morse Pete Ferrari Kevin McKeage Bob Marley	Construction/Safety Oversight Construction/Safety Oversight Construction/Safety Oversight CQM Oversight
RMCI	Jerry Patton Ed Hyde Phillip Johnson Felipe Hernandez Robert BeBault Jesus Moya Angel Castaneda Lorenzo Tena George Ingram	General Contractor
Bogan Painting	Marco Lopez Ismaiel Palacias	Painting
Wilson	Britt Crooks Jaime Perez	Electrical Contractor
Techsas	Ed Butler	Instrumentation Contractor
Cascade	Guy Hanninen Traves McClanahan	Pump Installation

Work Performed:

Planned Activities:

- Begin pump installation
- Prep for pressure testing
- Continue the reroute of the 228 communication line
- Pneumatically test containment line

Completed Activities:

- Conducted pneumatic pressure testing on the containment line
- Completed the reroute of the 228 communication line
- Completed pump installation
- Drained conveyance line for well 228
- Began the tie in on the 228 conveyance

Material Deliveries:

• None
Construction Quality Control Activities or Samples Collected: • Material inspection, Pressure testing
Observations or Possible Variations from Specifications: • None

Anticipated Activities for the Following Day:	
• Hydrostatically pressure test the carrier line • Cut and splice into the 228 conveyance line • Junction vault installation **Planned Material Deliveries:** • None	
Contractor Reports, Manifests, Documents Reviewed and Logged:	
• None	
Report Completed By:	
Tyler Curley	Date: 30 November 2017

CASCADE

RMCI
GENERAL CONTRACTOR
INC

McELROY

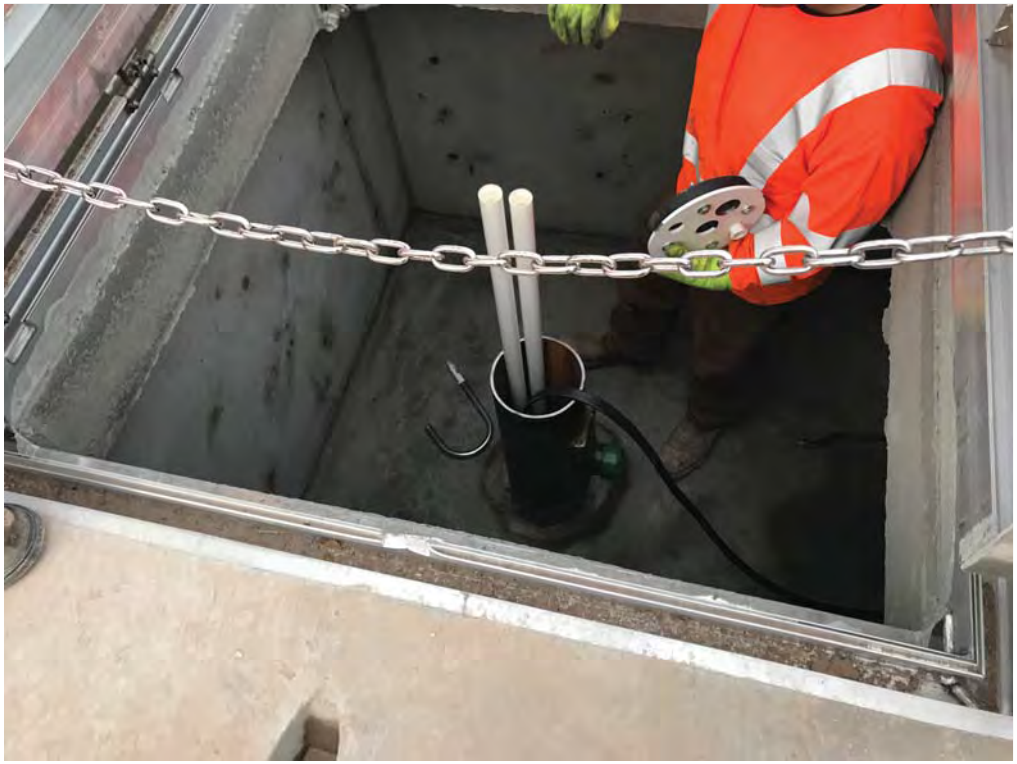

DAILY REPORT

(ATTACH ADDITIONAL SHEETS IF NECESSARY)

CONTRACT NAME:	Kirtland AFB Bulk Fuels Facility Expansion of Dissolved Plume GWTS Design	REPORT NO:	025
CONTRACT NUMBER:	W912DR-12-D-0006	REPORT DATE:	30NOV17
REVISION NUMBER:	-	REVISION DATE:	-
TASK ORDER NUMBER:	DM01	PROJECT NAME / LOCATION:	Kirtland BFF
PROJECT NUMBER:	62599DM01	PROJECT DESCRIPTION:	Installation of KAFB-106239 Conveyance Line
PROJECT MANAGER:	Devon Jercinovic	FIELD QUALITY MANAGER:	Kevin McKenzie
CONSTRUCTION MANAGER:	Tyler Curley	SITE SAFETY MANAGER:	Earl Morse / Pete Ferrari

AM WEATHER:	Cloudy Cold	PM WEATHER:	Cloudy Cool	MAX TEMP (F):	58		

SUMMARY OF WORK PERFORMED TODAY

CQM Inspection of KAFB-106228 Line Drainage and Pneumatic Testing

HEALTH AND SAFETY REPORT

SAFETY ACTIONS TAKEN TODAY/SAFETY INSPECTIONS CONDUCTED (Include Observations, Safety Violations, Corrective Instructions Given, Corrective Actions Taken, and Results of Safety Inspections Conducted:

See Construction Managers Daily Report

TAILGATE TOPICS:

"

SAFE BEHAVIOR OBSERVATIONS/SELF-ASSESSMENTS:

"

OPERATIONS/PRODUCTION REPORT

WORK FORCE – CONTRACTOR AND SUBCONTRACTOR

Company	Cumulative Total of Work Hours From Previous Report	Total Hours Today	Total Work Hours From Start of Injection Event
See CM's Daily Report.			

EQUIPMENT ON HAND

Description of Equipment	Make/Model/ Manufacturer	Equipment ID Number	Inspection Performed By
Water truck, Hydrostatic Pump	Colorado Kenworth, Honda 160	4610, 8397	Robert Gebault, Jerry Patton
Loader	Komatsu PC200	1107	Jesus Moya
HDPE Welder (x2)	McElroy Tractor	8617, 8618	Jerry Patton
Backhoe	John Deere 310SJ	1415	Jesus Moya
Pulling Rig	Cascade Truck Mount	-	Gary Hanninen
Vac Truck	2500 gal, ACT	-	Jared Kinsey

COMMENTS (acceptance status, inspection findings, etc.):

OK

WORK AND/OR TESTS ACCOMPLISHED OR IN PROGRESS

Performed Work/Test for Today: See CM's Daily Report

Planned Work/Test for Tomorrow: "

Planned Work/Test for Next Week: "

CHANGED CONDITIONS/DELAY/CONFLICTS ENCOUNTERED (List any conflicts with the project [i.e., scope of work and/or drawings], delays to the project attributable to site and weather conditions, etc. "

VISITORS AND DISCUSSIONS: "

QUALITY CONTROL REPORT

MATERIALS DELIVERED TO JOB SITE

Quantity/Volume/ Weight	Description of Materials Received	Make/Model/ Manufacturer	Material Lot Number	Inspection Performed By
None				

COMMENTS (acceptance status, inspection findings, etc.): NA

INSPECTIONS PERFORMED

Task/Activity Inspected	Inspection Performed	Findings
KAFB-106228 Phase	Visual	OK
Pneumatic Testing	Visual	OK

TESTS PERFORMED

Task/Activity Tested	Test Performed	Test Results (Pass/Fail) - Criteria
Dual Walled Conveyance	Pneumatic Pressure (exterior line)	Pass, Maintained 5 psi

QUALITY ISSUES AND RESOLUTIONS: Hydrostatic Testing on 29NOV17 was rejected. Water was evacuated from the line and fittings were replaced. Retesting will be performed 01DEC17.

SUBMITTALS INSPECTION / REVIEW

Submittal No.	Submittal Description	Specification/Plan Reference	Submittal Approved?		Comment/Reason/Action
NA	Daily Report	_	Yes ☐	No ☐	Pending
NA	SBO	_	Yes ☐	No ☐	Pending
NA	PTSP	_	Yes ☐	No ☐	Pending

REGULATORY COMPLIANCE REPORT							
PERMIT INSPECTIONS PERFORMED: None							
WASTE ACCUMULATION/STOCKPILE AREA INSPECTION							
Inspection Performed By:	NA			Signature of Inspector:			
Accumulation / Stockpile Area Inspected:							
No of Bins:		No of Tankers		No of Roll-Off Boxes:		No. of Tanks	
Inspection Results: NA							
GENERAL COMMENTS							
General Comments: (rework, directives, etc.): Pneumatic Testing Passed, Hydrostatic will be retested 01DEC17							
ATTACHMENTS							
List of Attachments: (examples, as applicable: submittals, meeting minutes, safety meeting minutes, COCs, weight tickets, manifests, profiles, rework item list, RFIs, DCNs, photographs, etc.): Photo log (Formal Pneumatic Testing Form to be submitted 01DEC17)							
NOTE: Write all entries legibly in ink. Line out all unused portions or designate as "not applicable". Preparer signs first and last name on each completed daily report. This form may be filled out electronically and signed electronically.				PREPARER'S SIGNATURE		DATE: 30NOV17	

Location: Station 1+00
Description: Pneumatic Testing Setup
Date: 30 November 2017 Direction: Down

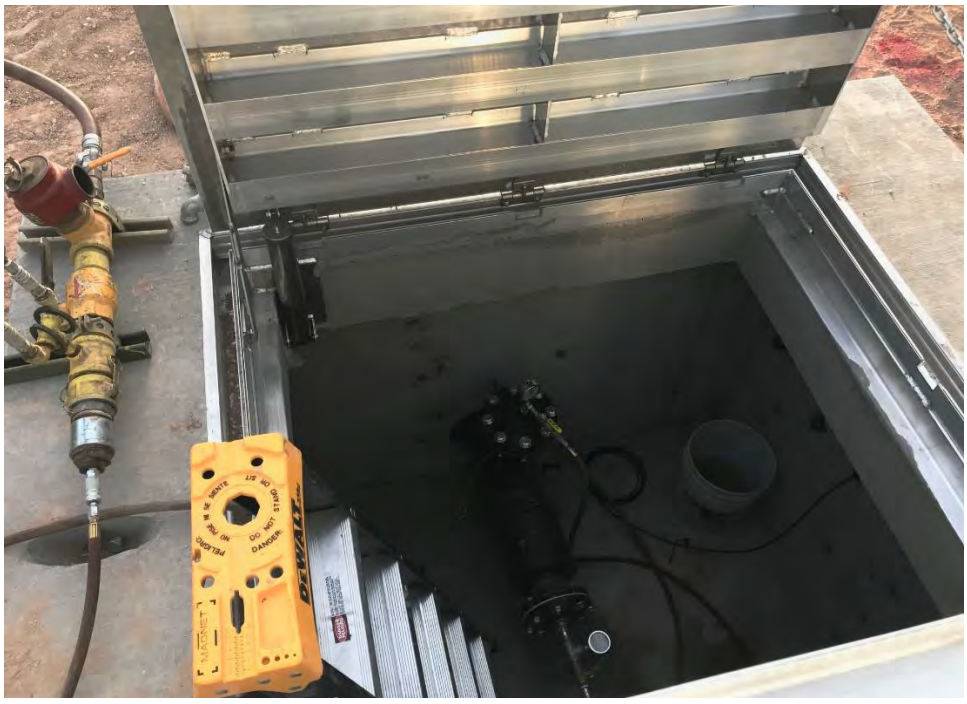

Location: Station 1+00
Description: Pneumatic Testing Setup
Date: 30 November 2017 Direction: Down

Location: Station 1+00
Description: Initial Pneumatic Pressure Test Reading (5 psi)
Date: 30 November 2017 Direction: East

Location: Station 1+00
Description: Final Pneumatic Pressure Test Reading (5 psi)
Date: 30 November 2017 Direction: East

Location: KAFB-106228 On-Base Vault
Description: Draining of KAFB-106228 Conveyance Line
Date: 30 November 2017 Direction: Down

EA Engineering, Science, and Technology, Inc

Employee/Visitor Register and Safety Brief				
Date: 11-30-17				
Site Entry/Exit		Name (Printed)	Signature	Company
Time In	Time Out			
0630	1730	Tyler Curley		EA
6:30	15:30	George Ingram		RMCI
6:30		Robert BeBault	~~Robert BeBault~~	RMCI
6:30		Angel Castaneda	Angel Castaneda	RMCI
6:30		Felipe H	Felipe H	RMCI
6:30		Jesus Moya	Jmoya	RMCI
6:30		Lorenzo Tena	Lorenzo Tena	RMCI
6:30	↓	Jerry Patton	Jerry Patton	RMCI
10:20	17:00	Phillip Johnson		RMCI
9:00AM	17:00	Marco Lopez		Bogan RMCI
9:00	↓	Ismael Bautista	Ismael Bautista	Bogan

EA Engineering, Science, and Technology, Inc

Employee/Visitor Register and Safety Brief

106239 Pump Installation

Date: 11-30-2017

Site Entry/Exit		Name (Printed)	Signature	Company
Time In	Time Out			
0700	1800	Ed Bunker	Ed Bunker	TREASOS
0700	1800	TRAVES McClanahan		CASCADE
0700	1230	Earl Morse	Earl Morse	EA
0700	1800	Guy Hannivan	Guy Hannivan	cascade
1200	1800	Bob Marley	Bob Marley	EA

EA ENGINEERING, SCIENCE AND TECHNOLOGY, INC.
SAFETY MEETING REPORT

Date: 11-30-17	**Time:** 0630	**Duration of meeting:** 10 min	**Project #** 605990101
Location: Ridgecrest		**Task:** Conveyance Line Install	

Type of meeting: _X_ Daily ____Weekly ____ Monthly ____ Other:_____

Items/Issues discussed:

1. Pressure testing safety
2. Over-head crushing hazards
3. Traffic
4. Pinch points
5.

Attach minutes of safety meeting if taken.

Safety questions/issues raised:	Actions/Follow-up needed:
1. None	
2.	
3.	
4.	
5.	
6.	

Remarks: None

Meeting conducted by:
Tyler Curley

EA Engineering, Science, and Technology, Inc.

DAILY SAFETY INSPECTION CHECKLIST (TO BE COMPLETED EACH DAY OF CONSTRUCTION OR HTRW SITE ACTIVITIES)

Site: KAFB Well 10G239
Location: Ridgecrest
Project No.: G2399 DM01
Client: USACE

Prepared by SSHO: Tyler Curley
Project Manager: Deven Jercinovic
Date: 11-30-17

Rating	Y	N	N/A	Comments/Immediate Corrective Action[1]
Accident Prevention Plan (APP) and Site Safety and Health Plan (SSHP) General Requirements				
Are there new onsite personnel? • Did they receive pre-entry briefing and are their names recorded in field logbook or daily log? • Was the USACE PM made aware of the new personnel. • Required training and medical surveillance documentation received (e.g., 40-hr, 8 hr, etc.)?		✓		
Did personnel sign in/out of site?	✓			
Daily tailgate safety meetings conducted and documented?	✓			
Were new activities performed today? Were hazards identified, discussed during the daily safety tailgate, and incorporated into revised APP/SSHP?	✓			
New materials brought on site? MSDSs available?		✓		
Exclusion (EZ), Contamination Reduction (CRZ), and Support Zones (SZ) delineated and enforced?	✓			
General housekeeping measures in place to prevent hazards?	✓			
Emergency Planning				
Were there any changes to emergency contact names, telephone numbers, or hospital? If so, were site personnel made aware and was information distributed/reposted.		✓		
Adequate safety equipment inventory available?	✓			
Fire extinguisher available (monthly inspection of extinguisher will suffice)	✓			
Eyewash station(s) functioning and in place (weekly inspection of eye wash station will suffice)?	✓			
First aid supplies available (weekly inspection of first aid kit will suffice)?	✓			
Communication equipment readily available for emergencies?	✓			
Any reported accidents/incidents at this site? If so, were accident reporting procedures followed?				
Air Monitoring				
Monitoring equipment specified in SSHP available and in working order? Air monitoring instrumentation for this site includes – check each if required/on site, note deficiencies in comments: • Combustible gas meter • Organic vapor analyzer • Contaminant specific analyzer for benzene (if total organic vapor concentrations exceed 0.5 ppm)	✓			
Monitoring equipment calibrated and calibration records				

Y = Satisfactory or Yes; N = Unsatisfactory or No, N/A = Not applicable

Rating	Y	N	N/A	Comments/Immediate Corrective Action[1]
available?				
Environmental and personnel monitoring performed as specified in SSHP?	✓			
PPE				
Proper dermal protection worn by EA and subcontracted employees when handling/ contacting hazardous chemicals or contaminated environmental media?	✓			
Required PPE (hard hats, safety boots / shoes, eye protection with side shields, hearing protection) being worn by EA and subcontracted employees?	✓			
PPE inspection completed by SSHO?	✓			
Drill Rig Operations				
Daily rig inspection completed? Any equipment problems?	✓			
Drill rigs/elevated equipment maintaining minimum 10-ft distance from energized (50 kV) overhead power lines?	✓			
Investigation-derived Waste (IDW)				
Wastes properly staged, secured, and labeled at end of day?			✓	

Additional Comments:

Site Safety and Health Officer's Signature

11-30-17
Date

[1]If a deficiency is noted that cannot be immediately corrected, the SSHO will monitor the progress in correcting the deficiency and will document following:

- Date the deficiency was identified
- Description of the deficiency
- Name of the person responsible for correcting the deficiency
- Projected date of correction
- Actual date of correction.

HEALTH AND SAFETY ACTIVITY REPORT

Site: KAFB Well 106839 Location: Ridgecrest Dr.

Weather Cond.: Sunny 60°F Onsite Hours: From 0630 To 1750

Changes in PPE Levels[1]	Work Operations	Reasons for Change
None		

Site Safety and Health Plan Violations	Corrective Action Specified	Corrective Action Taken [2] (yes/no)
None		

Observations and Comments:

None

Completed by: Tyler Cerfey Date: 11-30-17

Site Health and Safety Supervisor

[1] Only SSHO may change PPE levels, using only criteria specified in APP/SSHP.

[2] If a deficiency is noted that cannot be immediately corrected, the SSHO will monitor the progress in correcting the deficiency and will document following:

- Date the deficiency was identified
- Description of the deficiency
- Name of the person responsible for correcting the deficiency
- Projected date of correction
- Actual date of correction.

From:	Curley, Tyler
To:	"Trent.Simpler@usace.army.mil"; "Amy.E.Sanchez@usace.army.mil"; "Carlos.F.Salazar@usace.army.mil"; "Linda.Dreeland@usace.army.mil"; "Mark.J.Phaneuf@usace.army.mil"
Cc:	Jercinovic, Devon; McKeage, Kevin; Morse, Earl; Bowman, Matthew; Ferrari, Peter
Subject:	Activity Report for KAFB Well 106239 Conveyance Line Installation 01 December 2017
Date:	Friday, December 01, 2017 5:21:09 PM
Attachments:	Daily Field Activities Summary Report.pdf Photos 12-1-17.pdf 026 CQM Daily Report 01DEC17.pdf

---

Issues Today 01 Friday December 2017:

- None

Resolution of Issues:

- None

Work Performed Today:

- Conducted the hydrostatic pressure test for the carrier line
- Completed the tie in on the 228 conveyance line
- Installed the base and the side walls on the junction vault
- Began tilling the soil in preparation for seeding and mulching
- Installed bollards around the 239 well vault

Installation Completion to Date: 65%

Work Planned for 04 December 2017:

- Begin seeding and mulching
- Complete junction vault installation

Please let me know if you need additional information.

Tyler Curley, P.E.
EA Engineering, Science, and Technology, Inc., PBC
320 Gold Avenue, SW Suite 1300
Albuquerque, NM 87120
(505) 715-4422 work
(719) 688-9558 cell
tcurley@eaest.com

DAILY FIELD ACTIVITIES SUMMARY REPORT		
PROJECT NAME: KAFB Well 106239 Conveyance Line Installation		
Date: 12-1-17	Time Shift Beginning: 0630	Time Shift Ending: 1600
Project Number: 62599DM01		Contract/Task Order No.:
Client: USACE		Report By: Tyler Curley
Contractor(s): RMCI		Project Manager: Devon Jercinovic
Design Manager:		Oversight Manager: Tyler Curley
Design Engineer: George Nemeth		Site Engineer: Tyler Curley
Weather: Sunny 60° F		Logbook Number: NA
Personnel Onsite:	**Name:**	**Reason for Being Onsite:**
EA	Tyler Curley Pete Ferrari Kevin McKeage	Construction/Safety Oversight Construction/Safety Oversight CQM
RMCI	Jerry Patton Ed Hyde Felipe Hernandez Robert BeBault Jesus Moya Angel Castaneda Lorenzo Tena George Ingram	General Contractor
Techsas	Ed Butler	Instrumentation Contractor
Cascade	Guy Hanninen Traves McClanahan	Pump Installation

Work Performed:

Planned Activities:

- Hydrostatically pressure test the carrier line
- Cut and splice into the 228 conveyance line
- Junction vault installation

Completed Activities:

- Conducted the hydrostatic pressure test for the carrier line
- Completed the tie in on the 228 conveyance line
- Installed the base and the side walls on the junction vault
- Began tilling the soil in preparation for seeding and mulching
- Installed bollards around the 239 well vault

Material Deliveries:

- None

Construction Quality Control Activities or Samples Collected:

- Pressure testing

Observations or Possible Variations from Specifications:

- None

Anticipated Activities for the Following Day:	
• Begin seeding and mulching • Complete junction vault installation **Planned Material Deliveries:** • None	
Contractor Reports, Manifests, Documents Reviewed and Logged:	
• None	
Report Completed By:	
Tyler Curley	Date: 1 December 2017

RMCI

RMCI

RMCI INC

DAILY REPORT

(ATTACH ADDITIONAL SHEETS IF NECESSARY)

CONTRACT NAME:	Kirtland AFB Bulk Fuels Facility Expansion of Dissolved Plume GWTS Design	REPORT NO:	026
CONTRACT NUMBER:	W912DR-12-D-0006	REPORT DATE:	9 DEC 17
REVISION NUMBER:	-	REVISION DATE:	-
TASK ORDER NUMBER:	DM01	PROJECT NAME / LOCATION:	Kirtland BFF
PROJECT NUMBER:	62599DM01	PROJECT DESCRIPTION:	Installation of KAFB-106239 Conveyance Line
PROJECT MANAGER:	Devon Jercinovic	FIELD QUALITY MANAGER:	Kevin McKeage
CONSTRUCTION MANAGER:	Tyler Curley	SITE SAFETY MANAGER:	Pete Ferrari

AM WEATHER:	Clear Cool	PM WEATHER:	Cloudy Cool	MAX TEMP (F):	62		

SUMMARY OF WORK PERFORMED TODAY

CQM Inspection of Testing

HEALTH AND SAFETY REPORT

SAFETY ACTIONS TAKEN TODAY/SAFETY INSPECTIONS CONDUCTED (Include Observations, Safety Violations, Corrective Instructions Given, Corrective Actions Taken, and Results of Safety Inspections Conducted:

See Construction Manager's Daily Report

TAILGATE TOPICS:

"

SAFE BEHAVIOR OBSERVATIONS/SELF-ASSESSMENTS:

"

OPERATIONS/PRODUCTION REPORT

WORK FORCE – CONTRACTOR AND SUBCONTRACTOR

Company	Cumulative Total of Work Hours From Previous Report	Total Hours Today	Total Work Hours From Start of Injection Event
See CM's Daily Report.			

EQUIPMENT ON HAND

Description of Equipment	Make/Model/ Manufacturer	Equipment ID Number	Inspection Performed By
Water Truck	Colorado Kenworth	4610	Robert Belpanti
Loader	Kawasaki 90Z	1107	Jesus Moya
HDPE Welder (x2)	McElroy Tracstar	8617, 8618	Jerry Patton
Back hoe	John Deere 310SJ	1415	Jesus Moya
Hydrostatic Pump	Honda GX160	8797	Jerry Patton

COMMENTS (acceptance status, inspection findings, etc.):

OK

WORK AND/OR TESTS ACCOMPLISHED OR IN PROGRESS

Performed Work/Test for Today: See CM's Daily Report

Planned Work/Test for Tomorrow: "

Planned Work/Test for Next Week: "

CHANGED CONDITIONS/DELAY/CONFLICTS ENCOUNTERED (List any conflicts with the project [i.e., scope of work and/or drawings], delays to the project attributable to site and weather conditions, etc. "

VISITORS AND DISCUSSIONS: "

QUALITY CONTROL REPORT

MATERIALS DELIVERED TO JOB SITE

Quantity/Volume/ Weight	Description of Materials Received	Make/Model/ Manufacturer	Material Lot Number	Inspection Performed By
None				

COMMENTS (acceptance status, inspection findings, etc.): NA

INSPECTIONS PERFORMED

Task/Activity Inspected	Inspection Performed	Findings
Hydrostatic Testing	Visual	OK

TESTS PERFORMED

Task/Activity Tested	Test Performed	Test Results (Pass/Fail) - Criteria
Hydrostatic Testing	Hydrostatic on inner conveyance	Pass 175 → 166 psi

QUALITY ISSUES AND RESOLUTIONS: None

SUBMITTALS INSPECTION / REVIEW

Submittal No.	Submittal Description	Specification/Plan Reference	Submittal Approved?		Comment/Reason/Action
NA	Daily Report	–	Yes ☐	No ☐	Pending
NA	SBO	–	Yes ☐	No ☐	Pending
NA	PTSP	–	Yes ☐	No ☐	Pending

REGULATORY COMPLIANCE REPORT							
PERMIT INSPECTIONS PERFORMED: None							
WASTE ACCUMULATION/STOCKPILE AREA INSPECTION							
Inspection Performed By:	NA			Signature of Inspector:			
Accumulation / Stockpile Area Inspected:							
No of Bins:		No of Tankers		No of Roll-Off Boxes:		No. of Tanks	
Inspection Results: NA							
GENERAL COMMENTS							
General Comments: (rework, directives, etc.): Testing Passed, Forms to be provided in Construction Completion Report							
ATTACHMENTS							
List of Attachments: (examples, as applicable: submittals, meeting minutes, safety meeting minutes, COCs, weight tickets, manifests, profiles, rework item list, RFIs, DCNs, photographs, etc.): Photo log							
NOTE: Write all entries legibly in ink. Line out all unused portions or designate as "not applicable". Preparer signs first and last name on each completed daily report. This form may be filled out electronically and signed electronically.				PREPARER'S SIGNATURE		01 DEC 17 DATE	

Location: Station 1+00
Description: Final Hydrostatic Pressure Reading (166 psi after 1 hour)
Date: 01 December 2017 Direction: Down

Location: Station 1+00
Description: Initial Hydrostatic Pressure Reading (175 psi)
Date: 01 December 2017 Direction: Down

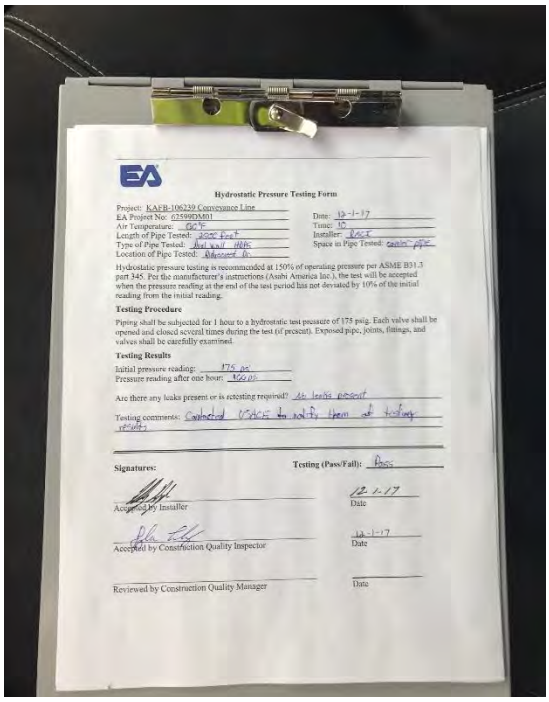

Hydrostatic Pressure Testing Form

Project: KAFB-106239 Conveyance Line
EA Project No: 62599DM01
Air Temperature: 80°F
Length of Pipe Tested: 3000 Feet
Type of Pipe Tested: Dual wall HDPE
Location of Pipe Tested: Kirtland AB
Date: 12-1-17
Time: 10
Installer: Layne
Space in Pipe Tested: carrier pipe

Hydrostatic pressure testing is recommended at 150% of operating pressure per ASME B31.3 part 345. Per the manufacturer's instructions (Asahi America Inc.), the test will be accepted when the pressure reading at the end of the test period has not deviated by 10% of the initial reading from the initial reading.

Testing Procedure

Piping shall be subjected for 1 hour to a hydrostatic test pressure of 175 psig. Each valve shall be opened and closed several times during the test (if present). Exposed pipe, joints, fittings, and valves shall be carefully examined.

Testing Results

Initial pressure reading: 175 psi
Pressure reading after one hour: 170 psi

Are there any leaks present or is retesting required? No leaks present

Testing comments: Contacted USACE to notify them of testing results

Signatures:

Testing (Pass/Fail): Pass

Accepted by Installer — Date: 12-1-17

Accepted by Construction Quality Inspector — Date: 12-1-17

Reviewed by Construction Quality Manager — Date

Location: Station 1+00
Description: Hydrostatic Pressure Test Form (Formal copy to be submitted at a later date)
Date: 01 December 2017 Direction: Down

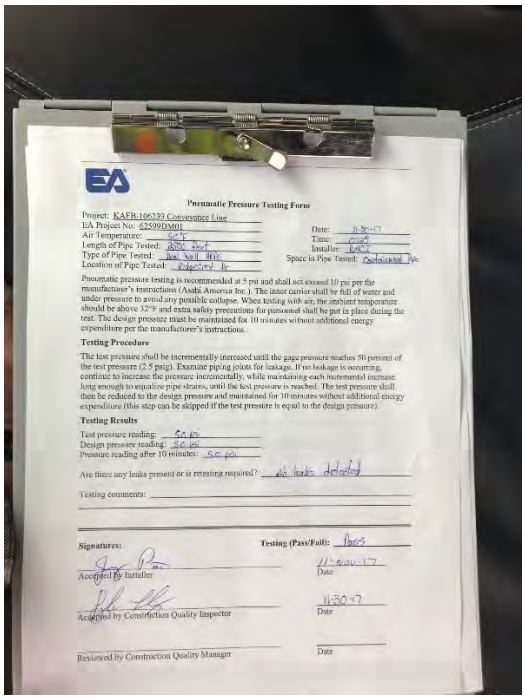

Pneumatic Pressure Testing Form

Project: KAFB-106239 Conveyance Line
EA Project No: 62599DM01
Air Temperature: 54°F
Length of Pipe Tested: 3000 Feet
Type of Pipe Tested: Dual wall HDPE
Location of Pipe Tested: Ridgecrest Dr
Date: 11-30-17
Time: 0900
Installer: Layne
Space in Pipe Tested: Conduit pipe

Pneumatic pressure testing is recommended at 5 psi and shall not exceed 10 psi per the manufacturer's instructions (Asahi America Inc.). The inner carrier shall be full of water and under pressure to avoid any possible collapse. When testing with air, the ambient temperature should be above 32°F and extra safety precautions for personnel shall be put in place during the test. The design pressure must be maintained for 10 minutes without additional energy expenditure per the manufacturer's instructions.

Testing Procedure

The test pressure shall be incrementally increased until the gage pressure reaches 50 percent of the test pressure (2.5 psig). Examine piping joints for leakage. If no leakage is occurring, continue to increase the pressure incrementally, while maintaining each incremental increase long enough to equalize pipe strains, until the test pressure is reached. The test pressure shall then be reduced to the design pressure and maintained for 10 minutes without additional energy expenditure (this step can be skipped if the test pressure is equal to the design pressure).

Testing Results

Test pressure reading: 50 psi
Design pressure reading: 30 psi
Pressure reading after 10 minutes: 50 psi

Are there any leaks present or is retesting required? No leaks detected

Testing comments:

Signatures:

Testing (Pass/Fail): Pass

Accepted by Installer — Date: 11-30-17

Accepted by Construction Quality Inspector — Date: 11-30-17

Reviewed by Construction Quality Manager — Date

Location: Station 1+00
Description: Pneumatic Pressure Test Form (Formal copy to be submitted at a later date)
Date: 01 December 2017 Direction: Down

EA Engineering, Science, and Technology, Inc

Employee/Visitor Register and Safety Brief

Date: 12-1-17

Site Entry/Exit		Name (Printed)	Signature	Company
Time In	Time Out			
6:30	1600	Tyler Curley		EA
6:30	↓	Jerry Patton	Jerry Patton	RMCI
6:30	↓	~~Jesus~~ Rioja	Rioja	RMCI
6:30	1430	Angel Castaneda	Angel Castaneda	RMCI
6:30	1600	Robert ~~Be~~Bault	~~Robert Be~~Bault	RMCI
6:30	1600	George Ingram		RMCI
6:30	1420	Lorenzo Tena	Lorenzo Tena	
6:30	1600	Felipe ~~Ll~~	Felipe Ll	RMCI
6:30	~~1600~~ 0730	FD Butler		TRICHSAS, INC.
0700	0730	Guy Hannine~~n~~	Guy Hannine~~n~~	cascade
07:00	0730	TRAVES McClanahan		CASCADE
7:58	1300	Martin Dominguez	~~Martin Dominguez~~	Caldon Seeding R.
7:59	0900	Richie Caldon	Richie Caldon	Caldon Seeding
8:00	0900	Rodolfo Alcorta	Rodolfo Alcorta	Caldon seeding
9:00	11:00	Salvador Lazcano	TLS Slazcano	TLS
9:00	11:00	Robert Romero		TLS

EA ENGINEERING, SCIENCE AND TECHNOLOGY, INC.
SAFETY MEETING REPORT

Date: 12-1-17	**Time:** 0630	**Duration of meeting:** 10 min	**Project #** 085401MO1
Location: KAFB Well 106239		**Task:** Conveyance Line Install	

Type of meeting: X Daily ___ Weekly ___ Monthly ___ Other: _____

Items/Issues discussed:

1. Slips trips falls
2. pressurized pipe
3. crushing hazards
4. On base emergency line
5.

Attach minutes of safety meeting if taken.

Safety questions/issues raised:	Actions/Follow-up needed:
1. None	
2.	
3.	
4.	
5.	
6.	

Remarks: None

Meeting conducted by:
Tyler Carley

EA Engineering, Science, and Technology, Inc.

DAILY SAFETY INSPECTION CHECKLIST
(TO BE COMPLETED EACH DAY OF CONSTRUCTION OR HTRW SITE ACTIVITIES)

Site: KAFB Well 106239
Location: Ridgecrest
Project No.: (0259)M01
Client: USACE

Prepared by SSHO: Tyler Curley
Project Manager: Deven Jerinovic
Date: 12-1-17

Rating	Y	N	N/A	Comments/Immediate Corrective Action[1]
Accident Prevention Plan (APP) and Site Safety and Health Plan (SSHP) General Requirements				
Are there new onsite personnel? • Did they receive pre-entry briefing and are their names recorded in field logbook or daily log? • Was the USACE PM made aware of the new personnel. • Required training and medical surveillance documentation received (e.g., 40-hr, 8 hr, etc.)?		✓		
Did personnel sign in/out of site?	✓			
Daily tailgate safety meetings conducted and documented?	✓			
Were new activities performed today? Were hazards identified, discussed during the daily safety tailgate, and incorporated into revised APP/SSHP?		✓		
New materials brought on site? MSDSs available?		✓		
Exclusion (EZ), Contamination Reduction (CRZ), and Support Zones (SZ) delineated and enforced?	✓			
General housekeeping measures in place to prevent hazards?	✓			
Emergency Planning				
Were there any changes to emergency contact names, telephone numbers, or hospital? If so, were site personnel made aware and was information distributed/reposted.		✓		
Adequate safety equipment inventory available?	✓			
Fire extinguisher available (monthly inspection of extinguisher will suffice)	✓			
Eyewash station(s) functioning and in place (weekly inspection of eye wash station will suffice)?	✓			
First aid supplies available (weekly inspection of first aid kit will suffice)?	✓			
Communication equipment readily available for emergencies?	✓			
Any reported accidents/incidents at this site? If so, were accident reporting procedures followed?		✓		
Air Monitoring				
Monitoring equipment specified in SSHP available and in working order? Air monitoring instrumentation for this site includes – check each if required/on site, note deficiencies in comments: • Combustible gas meter • Organic vapor analyzer • Contaminant specific analyzer for benzene (if total organic vapor concentrations exceed 0.5 ppm)	✓			
Monitoring equipment calibrated and calibration records	✓			

Y = Satisfactory or Yes; N = Unsatisfactory or No, N/A = Not applicable

Rating	Y	N	N/A	Comments/Immediate Corrective Action[1]
available?				
Environmental and personnel monitoring performed as specified in SSHP?	✓			
PPE				
Proper dermal protection worn by EA and subcontracted employees when handling/ contacting hazardous chemicals or contaminated environmental media?	✓			
Required PPE (hard hats, safety boots / shoes, eye protection with side shields, hearing protection) being worn by EA and subcontracted employees?	✓			
PPE inspection completed by SSHO?	✓			
Drill Rig Operations				
Daily rig inspection completed? Any equipment problems?	✓			
Drill rigs/elevated equipment maintaining minimum 10-ft distance from energized (50 kV) overhead power lines?	✓			
Investigation-derived Waste (IDW)				
Wastes properly staged, secured, and labeled at end of day?			✓	

Additional Comments:

Site Safety and Health Officer's Signature

12-1-17

Date

[1]If a deficiency is noted that cannot be immediately corrected, the SSHO will monitor the progress in correcting the deficiency and will document following:

- Date the deficiency was identified
- Description of the deficiency
- Name of the person responsible for correcting the deficiency
- Projected date of correction
- Actual date of correction.

HEALTH AND SAFETY ACTIVITY REPORT

Site: KAFB Well 100239 Location: Ridgecrest Dr

Weather Cond.: Sunny 65° Onsite Hours: From 0630 To 16:00

Changes in PPE Levels[1]	Work Operations	Reasons for Change
None		

Site Safety and Health Plan Violations	Corrective Action Specified	Corrective Action Taken [2](yes/no)
None		

Observations and Comments:

None

Completed by: Tyler Curley Date: 6-1-17

Site Health and Safety Supervisor

[1]Only SSHO may change PPE levels, using only criteria specified in APP/SSHP.

[2]If a deficiency is noted that cannot be immediately corrected, the SSHO will monitor the progress in correcting the deficiency and will document following:

- Date the deficiency was identified
- Description of the deficiency
- Name of the person responsible for correcting the deficiency
- Projected date of correction
- Actual date of correction.

From:	Curley, Tyler
To:	"Trent.Simpler@usace.army.mil"; "Amy.E.Sanchez@usace.army.mil"; "Carlos.F.Salazar@usace.army.mil"; "Linda.Dreeland@usace.army.mil"; "Mark.J.Phaneuf@usace.army.mil"
Cc:	Jercinovic, Devon; McKeage, Kevin; Morse, Earl; Bowman, Matthew
Subject:	Activity Report for KAFB Well 106239 Conveyance Line Installation 01 December 2017
Date:	Monday, December 04, 2017 5:31:07 PM
Attachments:	Daily Field Activities Summary Report.pdf Photos 12-4-17.pdf 027 CQM Daily Report 04DEC17.pdf

---

Issues Today 04 Monday December 2017:

- None

Resolution of Issues:

- None

Work Performed Today:

- Grouted pipe opening in the junction vault
- Installed pipe supports in the junction vault
- Began backfill and compaction of the junction vault

Installation Completion to Date: 66%

Work Planned for 05 December 2017:

- Begin seeding and mulching
- Complete junction vault installation and install bollards
- Paint bollards

Please let me know if you need additional information.

Tyler Curley, P.E.
EA Engineering, Science, and Technology, Inc., PBC
320 Gold Avenue, SW Suite 1300
Albuquerque, NM 87120
(505) 715-4422 work
(719) 688-9558 cell
tcurley@eaest.com

DAILY FIELD ACTIVITIES SUMMARY REPORT		
PROJECT NAME: KAFB Well 106239 Conveyance Line Installation		
Date: 12-4-17	Time Shift Beginning: 0630	Time Shift Ending: 1530
Project Number: 62599DM01		Contract/Task Order No.:
Client: USACE		Report By: Tyler Curley
Contractor(s): RMCI		Project Manager: Devon Jercinovic
Design Manager:		Oversight Manager: Tyler Curley
Design Engineer: George Nemeth		Site Engineer: Tyler Curley
Weather: Sunny 50° F		Logbook Number: NA
Personnel Onsite:	**Name:**	**Reason for Being Onsite:**
EA	Tyler Curley	Construction/Safety Oversight
RMCI	Jerry Patton Ed Hyde Felipe Hernandez Robert BeBault Jesus Moya Angel Castaneda Lorenzo Tena George Ingram	General Contractor
Wilson Electric	Britt Crooks Jaime Perez	Electrical Contractor

Work Performed:

Planned Activities:

- Begin seeding and mulching
- Complete junction vault installation

Completed Activities:

- Grouted pipe opening in the junction vault
- Installed pipe supports in the junction vault
- Began backfill and compaction of the junction vault

Material Deliveries:

- None

Construction Quality Control Activities or Samples Collected:

- Pressure testing review

Observations or Possible Variations from Specifications:

- None

Anticipated Activities for the Following Day:

- Begin seeding and mulching
- Complete junction vault installation and install bollards
- Paint bollards

Planned Material Deliveries: • None	
Contractor Reports, Manifests, Documents Reviewed and Logged:	
• None	
Report Completed By:	
Tyler Curley	Date: 4 December 2017

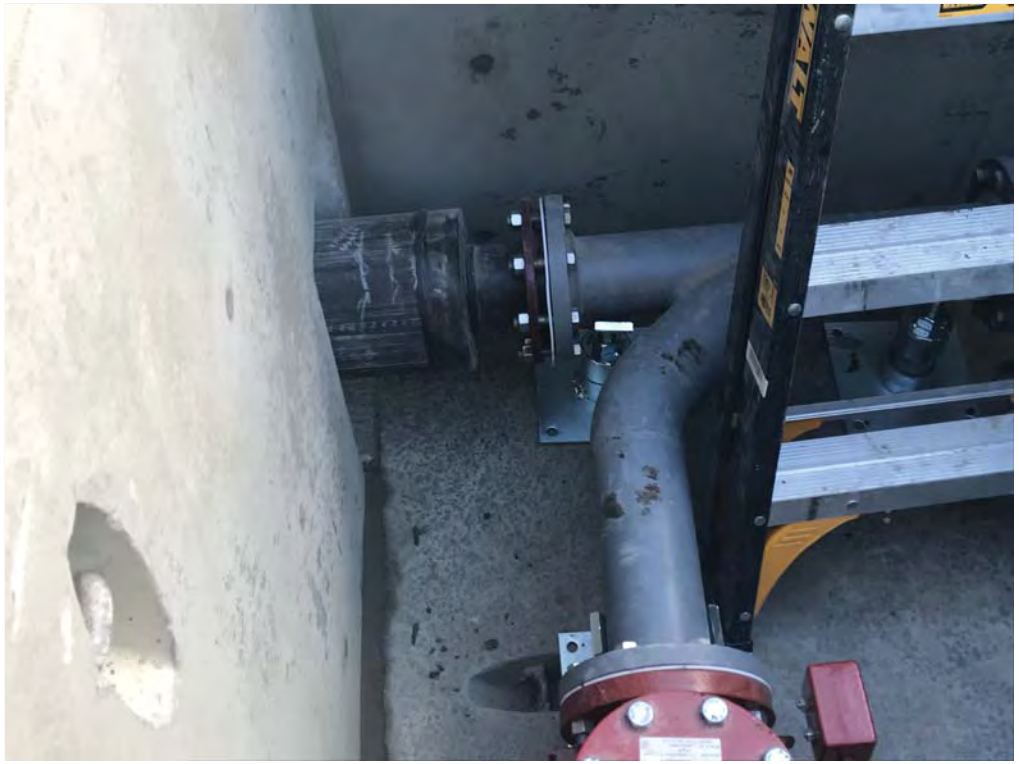

DAILY REPORT

(ATTACH ADDITIONAL SHEETS IF NECESSARY)

CONTRACT NAME:	Kirtland AFB Bulk Fuels Facility Expansion of Dissolved Plume GWTS Design	REPORT NO:	027
CONTRACT NUMBER:	W912DR-12-D-0006	REPORT DATE:	04DEC17
REVISION NUMBER:	-	REVISION DATE:	-
TASK ORDER NUMBER:	DM01	PROJECT NAME / LOCATION:	Kirtland BFF
PROJECT NUMBER:	62599DM01	PROJECT DESCRIPTION:	Installation of KAFB-106239 Conveyance Line
PROJECT MANAGER:	Devon Jercinovic	FIELD QUALITY MANAGER:	Kevin McKeage
CONSTRUCTION MANAGER:	Tyler Curley	SITE SAFETY MANAGER:	Tyler Curley

AM WEATHER:	Clear Cold	PM WEATHER:	Clear Cool	MAX TEMP (F):	54		

SUMMARY OF WORK PERFORMED TODAY

CQM Review of Testing Forms.

HEALTH AND SAFETY REPORT

SAFETY ACTIONS TAKEN TODAY/SAFETY INSPECTIONS CONDUCTED (Include Observations, Safety Violations, Corrective Instructions Given, Corrective Actions Taken, and Results of Safety Inspections Conducted:

See CM's Daily Report

TAILGATE TOPICS:

"

SAFE BEHAVIOR OBSERVATIONS/SELF-ASSESSMENTS:

"

OPERATIONS/PRODUCTION REPORT

WORK FORCE – CONTRACTOR AND SUBCONTRACTOR

Company	Cumulative Total of Work Hours From Previous Report	Total Hours Today	Total Work Hours From Start of Injection Event
See CM's Daily Report			

EQUIPMENT ON HAND

Description of Equipment	Make/Model/ Manufacturer	Equipment ID Number	Inspection Performed By
Water Truck	Colorado Kenworth	4610	Robert Bebout
Loader	Komatsu WA200	1107	Jesus Moya
HDPE Welder (x 2)	McElroy Tracstar	8617, 8618	Jerry Patton
Backhoe	John Deere 310SJ	1415	Jesus Moya

COMMENTS (acceptance status, inspection findings, etc.):

OK

WORK AND/OR TESTS ACCOMPLISHED OR IN PROGRESS

Performed Work/Test for Today:

See CM's Daily Report

Planned Work/Test for Tomorrow:

"

Planned Work/Test for Next Week:

"

CHANGED CONDITIONS/DELAY/CONFLICTS ENCOUNTERED (List any conflicts with the project [i.e., scope of work and/or drawings], delays to the project attributable to site and weather conditions, etc.

"

VISITORS AND DISCUSSIONS:

"

QUALITY CONTROL REPORT

MATERIALS DELIVERED TO JOB SITE

Quantity/Volume/ Weight	Description of Materials Received	Make/Model/ Manufacturer	Material Lot Number	Inspection Performed By
None				

COMMENTS (acceptance status, inspection findings, etc.):

INSPECTIONS PERFORMED

Task/Activity Inspected	Inspection Performed	Findings
None		

TESTS PERFORMED

Task/Activity Tested	Test Performed	Test Results (Pass/Fail) - Criteria
None		

QUALITY ISSUES AND RESOLUTIONS: Review of Testing Forms, both passed.

SUBMITTALS INSPECTION / REVIEW

Submittal No.	Submittal Description	Specification/Plan Reference	Submittal Approved?		Comment/Reason/Action
NA	Daily Report	_	Yes ☐	No ☐	Pending
NA	SBO	_	Yes ☐	No ☐	Pending
NA	PTSP	_	Yes ☐	No ☐	Pending

REGULATORY COMPLIANCE REPORT							
PERMIT INSPECTIONS PERFORMED: None							
WASTE ACCUMULATION/STOCKPILE AREA INSPECTION							
Inspection Performed By:	NA			Signature of Inspector:			
Accumulation / Stockpile Area Inspected:							
No of Bins:		No of Tankers		No of Roll-Off Boxes:		No. of Tanks	
Inspection Results: NA							
GENERAL COMMENTS							
General Comments: (rework, directives, etc.): OK							
ATTACHMENTS							
List of Attachments: (examples, as applicable: submittals, meeting minutes, safety meeting minutes, COCs, weight tickets, manifests, profiles, rework item list, RFIs, DCNs, photographs, etc.): Attached Final Testing Forms.							
NOTE: Write all entries legibly in ink. Line out all unused portions or designate as "not applicable". Preparer signs first and last name on each completed daily report. This form may be filled out electronically and signed electronically.				PREPARER'S SIGNATURE		04DEC17 DATE	

Pneumatic Pressure Testing Form

Project: KAFB-106239 Conveyance Line
EA Project No: 62599DM01
Air Temperature: 50°F
Length of Pipe Tested: 2500 feet
Type of Pipe Tested: Dual Wall HDPE
Location of Pipe Tested: Ridgecrest Dr

Date: 11-30-17
Time: 0725
Installer: RMCI
Space in Pipe Tested: Containment Pipe

Pneumatic pressure testing is recommended at 5 psi and shall not exceed 10 psi per the manufacturer's instructions (Asahi America Inc.). The inner carrier shall be full of water and under pressure to avoid any possible collapse. When testing with air, the ambient temperature should be above 32°F and extra safety precautions for personnel shall be put in place during the test. The design pressure must be maintained for 10 minutes without additional energy expenditure per the manufacturer's instructions.

Testing Procedure

The test pressure shall be incrementally increased until the gage pressure reaches 50 percent of the test pressure (2.5 psig). Examine piping joints for leakage. If no leakage is occurring, continue to increase the pressure incrementally, while maintaining each incremental increase long enough to equalize pipe strains, until the test pressure is reached. The test pressure shall then be reduced to the design pressure and maintained for 10 minutes without additional energy expenditure (this step can be skipped if the test pressure is equal to the design pressure).

Testing Results

Test pressure reading: 5.0 psi
Design pressure reading: 5.0 psi
Pressure reading after 10 minutes: 5.0 psi

Are there any leaks present or is retesting required? No leaks detected

Testing comments: _____

Signatures:

Testing (Pass/Fail): Pass

_____ 11-NOV-17
Accepted by Installer — Date

_____ 11-30-17
Accepted by Construction Quality Inspector — Date

_____ _____
Reviewed by Construction Quality Manager — Date

Hydrostatic Pressure Testing Form

Project: KAFB-106239 Conveyance Line
EA Project No: 62599DM01
Air Temperature: 60°F
Length of Pipe Tested: 2500 feet
Type of Pipe Tested: Dual wall HDPE
Location of Pipe Tested: Ridgecrest Dr.

Date: 12-1-17
Time: 10
Installer: RMCI
Space in Pipe Tested: carrier pipe

Hydrostatic pressure testing is recommended at 150% of operating pressure per ASME B31.3 part 345. Per the manufacturer's instructions (Asahi America Inc.), the test will be accepted when the pressure reading at the end of the test period has not deviated by 10% of the initial reading from the initial reading.

Testing Procedure

Piping shall be subjected for 1 hour to a hydrostatic test pressure of 175 psig. Each valve shall be opened and closed several times during the test (if present). Exposed pipe, joints, fittings, and valves shall be carefully examined.

Testing Results

Initial pressure reading: 175 psi
Pressure reading after one hour: 166 psi

Are there any leaks present or is retesting required? No leaks present

Testing comments: Contacted USACE to notify them of testing results

Signatures:

Testing (Pass/Fail): Pass

Accepted by Installer — Date: 12-1-17

Accepted by Construction Quality Inspector — Date: 12-1-17

Reviewed by Construction Quality Manager — Date

EA Engineering, Science, and Technology, Inc

Employee/Visitor Register and Safety Brief

Date: 12-4-17

Site Entry/Exit		Name (Printed)	Signature	Company
Time In	Time Out			
0620	1530	Tyler Corley		EA
6:30		Felipe Ld	Felipe Ld	RMCI
6:30		Jorge Patton		RMCI
6:30		Robert Bezault		RMCI
6:30	↓	Jesus Moya	Moya	RMCI
650	1500	ED Hyde		RMCI
7:30	4:30	mike moya		Caldon
7:30	4:30	Rudy Alcorta		Caldon Seeding
700	1400	Britt Crooks	BC	Wilson
700	1400	Jaime Lozano Perez		wilson

EA ENGINEERING, SCIENCE AND TECHNOLOGY, INC.
SAFETY MEETING REPORT

Date: 12-4-17	**Time:** 0630	**Duration of meeting:** 10min	**Project #** G9599MA
Location: KAFB Well 106239		**Task:** Conveyance Line Install	

Type of meeting: X Daily ___ Weekly ___ Monthly ___ Other: _____

Items/Issues discussed:

1. Trench safety
2. crushing hazards
3. moving equipment
4. slips, trips, falls
5.

Attach minutes of safety meeting if taken.

Safety questions/issues raised:	Actions/Follow-up needed:
1. None	
2.	
3.	
4.	
5.	
6.	

Remarks:
None

Meeting conducted by:
Tyler Corley

EA Engineering, Science, and Technology, Inc.

DAILY SAFETY INSPECTION CHECKLIST
(TO BE COMPLETED EACH DAY OF CONSTRUCTION OR HTRW SITE ACTIVITIES)

Site: KAFB Well 106239
Location: Ridgecrest Dr.
Project No.: 60599DM01
Client: USACE

Prepared by SSHO: Tyler Curley
Project Manager: Deian Jerinovic
Date: 12-4-17

Rating	Y	N	N/A	Comments/Immediate Corrective Action[1]
Accident Prevention Plan (APP) and Site Safety and Health Plan (SSHP) General Requirements				
Are there new onsite personnel? • Did they receive pre-entry briefing and are their names recorded in field logbook or daily log? • Was the USACE PM made aware of the new personnel. • Required training and medical surveillance documentation received (e.g., 40-hr, 8 hr, etc.)?		✓		
Did personnel sign in/out of site?	✓			
Daily tailgate safety meetings conducted and documented?	✓			
Were new activities performed today? Were hazards identified, discussed during the daily safety tailgate, and incorporated into revised APP/SSHP?		✓		
New materials brought on site? MSDSs available?		✓		
Exclusion (EZ), Contamination Reduction (CRZ), and Support Zones (SZ) delineated and enforced?	✓			
General housekeeping measures in place to prevent hazards?	✓			
Emergency Planning				
Were there any changes to emergency contact names, telephone numbers, or hospital? If so, were site personnel made aware and was information distributed/reposted.		✓		
Adequate safety equipment inventory available?	✓			
Fire extinguisher available (monthly inspection of extinguisher will suffice)	✓			
Eyewash station(s) functioning and in place (weekly inspection of eye wash station will suffice)?	✓			
First aid supplies available (weekly inspection of first aid kit will suffice)?	✓			
Communication equipment readily available for emergencies?	✓			
Any reported accidents/incidents at this site? If so, were accident reporting procedures followed?		✓		
Air Monitoring				
Monitoring equipment specified in SSHP available and in working order? Air monitoring instrumentation for this site includes – check each if required/on site, note deficiencies in comments: • Combustible gas meter • Organic vapor analyzer • Contaminant specific analyzer for benzene (if total organic vapor concentrations exceed 0.5 ppm)	✓			
Monitoring equipment calibrated and calibration records	✓			

Y = Satisfactory or Yes; N = Unsatisfactory or No, N/A = Not applicable

Rating	Y	N	N/A	Comments/Immediate Corrective Action[1]
available?				
Environmental and personnel monitoring performed as specified in SSHP?	✓			
PPE				
Proper dermal protection worn by EA and subcontracted employees when handling/ contacting hazardous chemicals or contaminated environmental media?	✓			
Required PPE (hard hats, safety boots / shoes, eye protection with side shields, hearing protection) being worn by EA and subcontracted employees?	✓			
PPE inspection completed by SSHO?	✓			
Drill Rig Operations				
Daily rig inspection completed? Any equipment problems?	✓			
Drill rigs/elevated equipment maintaining minimum 10-ft distance from energized (50 kV) overhead power lines?	✓			
Investigation-derived Waste (IDW)				
Wastes properly staged, secured, and labeled at end of day?			✓	

Additional Comments:

Site Safety and Health Officer's Signature

12-4-17
Date

[1]If a deficiency is noted that cannot be immediately corrected, the SSHO will monitor the progress in correcting the deficiency and will document following:

- Date the deficiency was identified
- Description of the deficiency
- Name of the person responsible for correcting the deficiency
- Projected date of correction
- Actual date of correction.

HEALTH AND SAFETY ACTIVITY REPORT

Site: KAFB Well 106239 Location: Ridgecrest Dr

Weather Cond.: Sunny 80° Onsite Hours: From 0630 To 1530

Changes in PPE Levels[1]	Work Operations	Reasons for Change
None		

Site Safety and Health Plan Violations	Corrective Action Specified	Corrective Action Taken [2](yes/no)
None		

Observations and Comments:

None

Completed by: Tyler Corley Date: 12-4-17
Site Health and Safety Supervisor

[1]Only SSHO may change PPE levels, using only criteria specified in APP/SSHP.
[2]If a deficiency is noted that cannot be immediately corrected, the SSHO will monitor the progress in correcting the deficiency and will document following:

- Date the deficiency was identified
- Description of the deficiency
- Name of the person responsible for correcting the deficiency
- Projected date of correction
- Actual date of correction.

From:	Curley, Tyler
To:	"Trent.Simpler@usace.army.mil"; "Amy.E.Sanchez@usace.army.mil"; "Carlos.F.Salazar@usace.army.mil"; "Linda.Dreeland@usace.army.mil"; "Mark.J.Phaneuf@usace.army.mil"
Cc:	Jercinovic, Devon; McKeage, Kevin; Morse, Earl; Bowman, Matthew
Subject:	Activity Report for KAFB Well 106239 Conveyance Line Installation 05 December 2017
Date:	Tuesday, December 05, 2017 6:30:22 PM
Attachments:	Daily Field Activities Summary Report.pdf 028 CQM Daily Report 05DEC17.pdf Photos 12-5-17.pdf

---

Issues Today 05 Tuesday December 2017:

- None

Resolution of Issues:

- None

Work Performed Today:

- Completed seeding and fertilizing site wide
- Completed mulching between Sta 1+00 through 4+00
- Partially mulched between Sta 4+00 and 6+50
- Backfilled and compacted around the junction vault
- Installed electrical pull box near the junction vault
- Painted the bollards and the steel wye in the junction vault

Installation Completion to Date: 68%

Work Planned for 06 December 2017:

- Complete seeding and mulching
- Install bollards around junction vault
- Site grading near the junction vault
- Site clean up

Please let me know if you need additional information.

Tyler Curley, P.E.
EA Engineering, Science, and Technology, Inc., PBC
320 Gold Avenue, SW Suite 1300
Albuquerque, NM 87120
(505) 715-4422 work
(719) 688-9558 cell
tcurley@eaest.com

DAILY FIELD ACTIVITIES SUMMARY REPORT		
PROJECT NAME: KAFB Well 106239 Conveyance Line Installation		
Date: 12-5-17	Time Shift Beginning: 0630	Time Shift Ending: 1530
Project Number: 62599DM01		Contract/Task Order No.:
Client: USACE		Report By: Tyler Curley
Contractor(s): RMCI		Project Manager: Devon Jercinovic
Design Manager:		Oversight Manager: Tyler Curley
Design Engineer: George Nemeth		Site Engineer: Tyler Curley
Weather: Sunny 48° F		Logbook Number: NA
Personnel Onsite:	**Name:**	**Reason for Being Onsite:**
EA	Tyler Curley Earl Morse	Construction/Safety Oversight Construction/Safety Oversight
USACE	Amy Sanchez	Site Visit
RMCI	Jerry Patton Ed Hyde Phillip Johnson Felipe Hernandez Robert BeBault Jesus Moya	General Contractor
Caldon Seeding	Michael Moya Fabiano Rodriguez	Seeding
Bogan Brothers Painting	Mario Lopez Steve Martinez	Painting

Work Performed:

Planned Activities:

- Begin seeding and mulching
- Complete junction vault installation and install bollards
- Paint bollards

Completed Activities:

- Completed seeding and fertilizing site wide
- Completed mulching between Sta 1+00 through 4+00
- Partially mulched between Sta 4+00 and 6+50
- Backfilled and compacted around the junction vault
- Installed electrical pull box near the junction vault
- Painted the bollards and the steel wye in the junction vault

Material Deliveries:

- Paint

Construction Quality Control Activities or Samples Collected:

- Material inspection

Observations or Possible Variations from Specifications:

- None

Anticipated Activities for the Following Day:	
• Complete seeding and mulching • Install bollards around junction vault • Site grading near the junction vault • Site clean up **Planned Material Deliveries:** • Base course	
Contractor Reports, Manifests, Documents Reviewed and Logged:	
• None	
Report Completed By:	
Tyler Curley	Date: 5 December 2017

RMCI INC
GENERAL CONTRACTOR

310SJ

Bobcat
T550

DAILY REPORT

(ATTACH ADDITIONAL SHEETS IF NECESSARY)

CONTRACT NAME:	Kirtland AFB Bulk Fuels Facility Expansion of Dissolved Plume GWTS Design	REPORT NO:	028
CONTRACT NUMBER:	W912DR-12-D-0006	REPORT DATE:	05DEC17
REVISION NUMBER:	-	REVISION DATE:	-
TASK ORDER NUMBER:	DM01	PROJECT NAME / LOCATION:	Kirtland BFF
PROJECT NUMBER:	62599DM01	PROJECT DESCRIPTION:	Installation of KAFB-106239 Conveyance Line
PROJECT MANAGER:	Devon Jercinovic	FIELD QUALITY MANAGER:	Kevin McKenzie
CONSTRUCTION MANAGER:	Tyler Curley	SITE SAFETY MANAGER:	Tyler Curley

AM WEATHER:	Cloudy Cold	PM WEATHER:	Cloudy Cool	MAX TEMP (F):	48		

SUMMARY OF WORK PERFORMED TODAY

CQM Inspection of Paint and Primer

HEALTH AND SAFETY REPORT

SAFETY ACTIONS TAKEN TODAY/SAFETY INSPECTIONS CONDUCTED (Include Observations, Safety Violations, Corrective Instructions Given, Corrective Actions Taken, and Results of Safety Inspections Conducted:

See CM's Daily Report

TAILGATE TOPICS:

"

SAFE BEHAVIOR OBSERVATIONS/SELF-ASSESSMENTS:

"

OPERATIONS/PRODUCTION REPORT

WORK FORCE – CONTRACTOR AND SUBCONTRACTOR

Company	Cumulative Total of Work Hours From Previous Report	Total Hours Today	Total Work Hours From Start of Injection Event
See CM's Daily Report			

EQUIPMENT ON HAND

Description of Equipment	Make/Model/ Manufacturer	Equipment ID Number	Inspection Performed By
Water Truck	Colorado Kenworth	4610	Robert Bobowski
Loader	Komatsu PC200	1107	Jesus Moya
Backhoe	John Deere 5730	1415	Jesus Moya

COMMENTS (acceptance status, inspection findings, etc.):

OK

WORK AND/OR TESTS ACCOMPLISHED OR IN PROGRESS

Performed Work/Test for Today: See CM's Daily Report

Planned Work/Test for Tomorrow: "

Planned Work/Test for Next Week: "

CHANGED CONDITIONS/DELAY/CONFLICTS ENCOUNTERED (List any conflicts with the project [i.e., scope of work and/or drawings], delays to the project attributable to site and weather conditions, etc. "

VISITORS AND DISCUSSIONS: "

QUALITY CONTROL REPORT

MATERIALS DELIVERED TO JOB SITE

Quantity/Volume/ Weight	Description of Materials Received	Make/Model/ Manufacturer	Material Lot Number	Inspection Performed By
2	Cans of grey primer	Ken Kronik BSOAZ6	–	TC
1	Can of white paint	Steel Master 9500	–	TC
2	Can of yellow paint	Steel Master 9500	–	TC

COMMENTS (acceptance status, inspection findings, etc.): Materials Accepted

INSPECTIONS PERFORMED

Task/Activity Inspected	Inspection Performed	Findings
None		

TESTS PERFORMED

Task/Activity Tested	Test Performed	Test Results (Pass/Fail) - Criteria
None		

QUALITY ISSUES AND RESOLUTIONS: None

SUBMITTALS INSPECTION / REVIEW

Submittal No.	Submittal Description	Specification/Plan Reference	Submittal Approved?		Comment/Reason/Action
NA	Daily Report	–	Yes ☐	No ☐	Pending
NA	SBO	–	Yes ☐	No ☐	Pending
NA	PTSP	–	Yes ☐	No ☐	Pending

REGULATORY COMPLIANCE REPORT							
PERMIT INSPECTIONS PERFORMED: None							
WASTE ACCUMULATION/STOCKPILE AREA INSPECTION							
Inspection Performed By:	NA			Signature of Inspector:			
Accumulation / Stockpile Area Inspected:							
No of Bins:		No of Tankers		No of Roll-Off Boxes:		No. of Tanks	
Inspection Results: NA							
GENERAL COMMENTS							
General Comments: (rework, directives, etc.): OK							
ATTACHMENTS							
List of Attachments: (examples, as applicable: submittals, meeting minutes, safety meeting minutes, COCs, weight tickets, manifests, profiles, rework item list, RFIs, DCNs, photographs, etc.): Photo log							
NOTE: Write all entries legibly in ink. Line out all unused portions or designate as "not applicable". Preparer signs first and last name on each completed daily report. This form may be filled out electronically and signed electronically.				PREPARER'S SIGNATURE		DATE: 05DEC17	

Location: Station 1+00
Description: Steel Master 9500 B56W311 Paint
Date: 05 December 2017 Direction: Down

Location: Station 1+00
Description: Kem Kromik Universal B50AZ6 Primer
Date: 05 December 2017 Direction: Down

EA Engineering, Science, and Technology, Inc

Employee/Visitor Register and Safety Brief

Date: 12-5-17

Site Entry/Exit		Name (Printed)	Signature	Company
Time In	Time Out			
630	1530	Tyler Corley		EA
6:30	1500	Felipe H		RMCI
6:30		Jesus Moya		RMCI
6:30		Robert BeBault		RMCI
6:30		J Patton		RMCI
6:30	↓			RMCI
700	1600	Eric Morse		EA
7:10	1600	Fabian Rodriguez		Caldon Seeding
7:10	1600	Michael Moya		Caldon Seeding
10:00	11:30	Phillip Johnson		RMCI
10:10	1050	Steve R Martinez		
10:10	1050	Mario Lopez		Bogan
1:15	1:45	Amy Sanchez		USACE

EA ENGINEERING, SCIENCE AND TECHNOLOGY, INC.
SAFETY MEETING REPORT

Date: 12-5-17	**Time:** 0630	**Duration of meeting:** 10min	**Project #** 69991/M01
Location: KAFB well 106239		**Task:** Conveyance Line Install	

Type of meeting: X **Daily** ____ **Weekly** ____ **Monthly** ____ **Other:**_____

Items/Issues discussed:

1. Slips trips falls
2. crushing hazards
3. Hospital route
4. On base emergency
5.

Attach minutes of safety meeting if taken.

Safety questions/issues raised:	**Actions/Follow-up needed:**
1. None	
2.	
3.	
4.	
5.	
6.	

Remarks: None

Meeting conducted by:

Tyler Curley

EA Engineering, Science, and Technology, Inc.

DAILY SAFETY INSPECTION CHECKLIST (TO BE COMPLETED EACH DAY OF CONSTRUCTION OR HTRW SITE ACTIVITIES)

Site: KAFB Well 106039
Location: Ridgecrest Dr.
Project No.: 62599 DM01
Client: USACE

Prepared by SSHO: Tyler Curley
Project Manager: Devon Jercinovic
Date: 12-5-17

Rating	Y	N	N/A	Comments/Immediate Corrective Action[1]
Accident Prevention Plan (APP) and Site Safety and Health Plan (SSHP) General Requirements				
Are there new onsite personnel? • Did they receive pre-entry briefing and are their names recorded in field logbook or daily log? • Was the USACE PM made aware of the new personnel. • Required training and medical surveillance documentation received (e.g., 40-hr, 8 hr, etc.)?		✓		
Did personnel sign in/out of site?	✓			
Daily tailgate safety meetings conducted and documented?	✓			
Were new activities performed today? Were hazards identified, discussed during the daily safety tailgate, and incorporated into revised APP/SSHP?		✓		
New materials brought on site? MSDSs available?	✓			
Exclusion (EZ), Contamination Reduction (CRZ), and Support Zones (SZ) delineated and enforced?	✓			
General housekeeping measures in place to prevent hazards?	✓			
Emergency Planning				
Were there any changes to emergency contact names, telephone numbers, or hospital? If so, were site personnel made aware and was information distributed/reposted.		✓		
Adequate safety equipment inventory available?	✓			
Fire extinguisher available (monthly inspection of extinguisher will suffice)	✓			
Eyewash station(s) functioning and in place (weekly inspection of eye wash station will suffice)?	✓			
First aid supplies available (weekly inspection of first aid kit will suffice)?	✓			
Communication equipment readily available for emergencies?	✓			
Any reported accidents/incidents at this site? If so, were accident reporting procedures followed?		✓		
Air Monitoring				
Monitoring equipment specified in SSHP available and in working order? Air monitoring instrumentation for this site includes – check each if required/on site, note deficiencies in comments: • Combustible gas meter • Organic vapor analyzer • Contaminant specific analyzer for benzene (if total organic vapor concentrations exceed 0.5 ppm)	✓			
Monitoring equipment calibrated and calibration records	✓			

Y = Satisfactory or Yes; N = Unsatisfactory or No, N/A = Not applicable

Rating	Y	N	N/A	Comments/Immediate Corrective Action[1]
available?				
Environmental and personnel monitoring performed as specified in SSHP?	✓			
PPE				
Proper dermal protection worn by EA and subcontracted employees when handling/ contacting hazardous chemicals or contaminated environmental media?	✓			
Required PPE (hard hats, safety boots / shoes, eye protection with side shields, hearing protection) being worn by EA and subcontracted employees?	✓			
PPE inspection completed by SSHO?	✓			
Drill Rig Operations				
Daily rig inspection completed? Any equipment problems?	✓			
Drill rigs/elevated equipment maintaining minimum 10-ft distance from energized (50 kV) overhead power lines?	✓			
Investigation-derived Waste (IDW)				
Wastes properly staged, secured, and labeled at end of day?			✓	

Additional Comments:

Site Safety and Health Officer's Signature

Date 12-5-17

[1]If a deficiency is noted that cannot be immediately corrected, the SSHO will monitor the progress in correcting the deficiency and will document following:

- Date the deficiency was identified
- Description of the deficiency
- Name of the person responsible for correcting the deficiency
- Projected date of correction
- Actual date of correction.

HEALTH AND SAFETY ACTIVITY REPORT

Site: KAFB Well 10039 Location: Ridgecrest Dr.

Weather Cond.: Partly cloudy, 50°F Onsite Hours: From 0630 To 1000

Changes in PPE Levels[1]	Work Operations	Reasons for Change
None		

Site Safety and Health Plan Violations	Corrective Action Specified	Corrective Action Taken [2](yes/no)
None		

Observations and Comments:

None

Completed by: Tyler Curley Date: 12-5-17

Site Health and Safety Supervisor

[1]Only SSHO may change PPE levels, using only criteria specified in APP/SSHP.

[2]If a deficiency is noted that cannot be immediately corrected, the SSHO will monitor the progress in correcting the deficiency and will document following:

- Date the deficiency was identified
- Description of the deficiency
- Name of the person responsible for correcting the deficiency
- Projected date of correction
- Actual date of correction.

From:	Curley, Tyler
To:	"Trent.Simpler@usace.army.mil"; "Amy.E.Sanchez@usace.army.mil"; "Carlos.F.Salazar@usace.army.mil"; "Linda.Dreeland@usace.army.mil"; "Mark.J.Phaneuf@usace.army.mil"
Cc:	Jercinovic, Devon; McKeage, Kevin; Morse, Earl; Bowman, Matthew
Subject:	Activity Report for KAFB Well 106239 Conveyance Line Installation 06 December 2017
Date:	Wednesday, December 06, 2017 5:55:06 PM
Attachments:	Daily Field Activities Summary Report.pdf Photos 12-6-17.pdf

---

Issues Today 06 Wednesday December 2017:

- None

Resolution of Issues:

- None

Work Performed Today:

- Continued mulching along Ridgecrest
- Backfilled and compacted around the junction vault
- Installed bollards around the junction vault
- Began leak detection wire install

Installation Completion to Date: 69%

Work Planned for 07 December 2017:

- Continue mulching
- Install the leak detection wire

Please let me know if you need additional information.

Tyler Curley, P.E.
EA Engineering, Science, and Technology, Inc., PBC
320 Gold Avenue, SW Suite 1300
Albuquerque, NM 87120
(505) 715-4422 work
(719) 688-9558 cell
tcurley@eaest.com

DAILY FIELD ACTIVITIES SUMMARY REPORT		
PROJECT NAME: KAFB Well 106239 Conveyance Line Installation		
Date: 12-6-17	Time Shift Beginning: 0630	Time Shift Ending: 1600
Project Number: 62599DM01		Contract/Task Order No.:
Client: USACE		Report By: Tyler Curley
Contractor(s): RMCI		Project Manager: Devon Jercinovic
Design Manager:		Oversight Manager: Tyler Curley
Design Engineer: George Nemeth		Site Engineer: Tyler Curley
Weather: Sunny 45° F		Logbook Number: NA
Personnel Onsite:	**Name:**	**Reason for Being Onsite:**
EA	Tyler Curley Dustin Graves	Construction/Safety Oversight Construction/Safety Oversight
RMCI	Jerry Patton Ed Hyde Phillip Johnson Felipe Hernandez Robert BeBault Jesus Moya	General Contractor
Caldon Seeding	Michael Moya Fabian Rodriguez Andrew Drissbe Jose Palma	Seeding
Ashai	Chris Acosta (Harrington) Robert Cosgrove John Galvin	Leak Detection Install Guidance

Work Performed:

Planned Activities:

- Complete seeding and mulching
- Install bollards around junction vault
- Site grading near the junction vault
- Site clean up

Completed Activities:

- Continued mulching along Ridgecrest
- Performed site grading junction vault
- Installed bollards around the junction vault
- Began leak detection wire install

Material Deliveries:

- Gravel Mulch
- Base course

Construction Quality Control Activities or Samples Collected:

- None

Observations or Possible Variations from Specifications:

- None

Anticipated Activities for the Following Day:	
• Continue mulching • Install the leak detection wire **Planned Material Deliveries:** • None	
Contractor Reports, Manifests, Documents Reviewed and Logged:	
• None	
Report Completed By:	
Tyler Curley	Date: 6 December 2017

EA Engineering, Science, and Technology, Inc

Employee/Visitor Register and Safety Brief

Date: 17-6-17

Site Entry/Exit		Name (Printed)	Signature	Company
Time In	Time Out			
0630	1600	Tyler Curley		EA
630	1600	Jerry Patton		RMCI
6:30	1530	Felipe Ita		RMCI
6:30	↓	Jesus Mora		RMCI
630	↓	Robert DeBruit		RMCI
6:30	↓	⇒ Hose		RMCI
6:50	12:45	Dustin Brewer		EA
7:30	1600	Michael Mora		caldon seeding
6:30	↓	Fabian Rodriguez		caldon Seeding
6:30	↓	ANDREW DIGGES		CALDON SEEDING
630	1600	Jose A. Palma		
215	1500	CHRIS ACOSTA		HARRINGTON
215	1530	Robert Cosgrove		Asbi/American
215	1530	John Galvin		ASBI America

EA ENGINEERING, SCIENCE AND TECHNOLOGY, INC.
SAFETY MEETING REPORT

Date: 12-6-17	**Time:** 0630	**Duration of meeting:** 10 min	**Project #** 605991.M01
Location: KAFB Well 100239		**Task:** Conveyance Line Install	

Type of meeting: X **Daily** ___ **Weekly** ___ **Monthly** ___ **Other:** _____

Items/Issues discussed:

1. Slips, trips, falls
2. Moving equipment
3. Traffic along Ridgecrest
4.
5.

Attach minutes of safety meeting if taken.

Safety questions/issues raised:	**Actions/Follow-up needed:**
1. None	
2.	
3.	
4.	
5.	
6.	

Remarks: None

Meeting conducted by:
Tyler Curley

EA Engineering, Science, and Technology, Inc.

DAILY SAFETY INSPECTION CHECKLIST
(TO BE COMPLETED EACH DAY OF CONSTRUCTION OR HTRW SITE ACTIVITIES)

Site: KAFB Well 106239
Location: Ridgecrest Dr
Project No.: 62599.DM01
Client: USACE

Prepared by SSHO: Tyler Curley
Project Manager: Deven Terchovic
Date : 12-6-17

Rating	Y	N	N/A	Comments/Immediate Corrective Action[1]
Accident Prevention Plan (APP) and Site Safety and Health Plan (SSHP) General Requirements				
Are there new onsite personnel? • Did they receive pre-entry briefing and are their names recorded in field logbook or daily log? • Was the USACE PM made aware of the new personnel. • Required training and medical surveillance documentation received (e.g., 40-hr, 8 hr, etc.)?		✓		
Did personnel sign in/out of site?	✓			
Daily tailgate safety meetings conducted and documented?	✓			
Were new activities performed today? Were hazards identified, discussed during the daily safety tailgate, and incorporated into revised APP/SSHP?		✓		
New materials brought on site? MSDSs available?		✓		
Exclusion (EZ), Contamination Reduction (CRZ), and Support Zones (SZ) delineated and enforced?	✓			
General housekeeping measures in place to prevent hazards?	✓			
Emergency Planning				
Were there any changes to emergency contact names, telephone numbers, or hospital? If so, were site personnel made aware and was information distributed/reposted.		✓		
Adequate safety equipment inventory available?	✓			
Fire extinguisher available (monthly inspection of extinguisher will suffice)	✓			
Eyewash station(s) functioning and in place (weekly inspection of eye wash station will suffice)?	✓			
First aid supplies available (weekly inspection of first aid kit will suffice)?	✓			
Communication equipment readily available for emergencies?	✓			
Any reported accidents/incidents at this site? If so, were accident reporting procedures followed?		✓		
Air Monitoring				
Monitoring equipment specified in SSHP available and in working order? Air monitoring instrumentation for this site includes – check each if required/on site, note deficiencies in comments: • Combustible gas meter • Organic vapor analyzer • Contaminant specific analyzer for benzene (if total organic vapor concentrations exceed 0.5 ppm)	✓			
Monitoring equipment calibrated and calibration records	✓			

Y = Satisfactory or Yes; N = Unsatisfactory or No, N/A = Not applicable

Rating	Y	N	N/A	Comments/Immediate Corrective Action[1]
available?				
Environmental and personnel monitoring performed as specified in SSHP?	✓			
PPE				
Proper dermal protection worn by EA and subcontracted employees when handling/ contacting hazardous chemicals or contaminated environmental media?	✓			
Required PPE (hard hats, safety boots / shoes, eye protection with side shields, hearing protection) being worn by EA and subcontracted employees?	✓			
PPE inspection completed by SSHO?	✓			
Drill Rig Operations				
Daily rig inspection completed? Any equipment problems?	✓			
Drill rigs/elevated equipment maintaining minimum 10-ft distance from energized (50 kV) overhead power lines?	✓			
Investigation-derived Waste (IDW)				
Wastes properly staged, secured, and labeled at end of day?			✓	

Additional Comments:

Site Safety and Health Officer's Signature

17-6-17

Date

[1]If a deficiency is noted that cannot be immediately corrected, the SSHO will monitor the progress in correcting the deficiency and will document following:

- Date the deficiency was identified
- Description of the deficiency
- Name of the person responsible for correcting the deficiency
- Projected date of correction
- Actual date of correction.

HEALTH AND SAFETY ACTIVITY REPORT

Site: KAFB well 106039 Location: Ridgecrest Dr.

Weather Cond.: 45°, sunny Onsite Hours: From 0630 To 1600

Changes in PPE Levels[1]	Work Operations	Reasons for Change
None		

Site Safety and Health Plan Violations	Corrective Action Specified	Corrective Action Taken [2](yes/no)
None		

Observations and Comments:
None

Completed by: Tyler Curley Date: 12-6-17
Site Health and Safety Supervisor

[1]Only SSHO may change PPE levels, using only criteria specified in APP/SSHP.
[2]If a deficiency is noted that cannot be immediately corrected, the SSHO will monitor the progress in correcting the deficiency and will document following:

- Date the deficiency was identified
- Description of the deficiency
- Name of the person responsible for correcting the deficiency
- Projected date of correction
- Actual date of correction.

From:	Curley, Tyler
To:	"Trent.Simpler@usace.army.mil"; "Amy.E.Sanchez@usace.army.mil"; "Carlos.F.Salazar@usace.army.mil"; "Linda.Dreeland@usace.army.mil"; "Mark.J.Phaneuf@usace.army.mil"
Cc:	Jercinovic, Devon; McKeage, Kevin; Morse, Earl; Bowman, Matthew
Subject:	Activity Report for KAFB Well 106239 Conveyance Line Installation 07 December 2017
Date:	Thursday, December 07, 2017 6:00:54 PM
Attachments:	Daily Field Activities Summary Report.pdf Photos 12-7-17.pdf 029 CQM Daily Report 07DEC17.pdf

---

Issues Today 07 Thursday December 2017:

- None

Resolution of Issues:

- None

Work Performed Today:

- Continued mulching along Ridgecrest
- Installed and test the leak detection system

Installation Completion to Date: 72%

Work Planned for 08 December 2017:

- Continue mulching
- Site clean up

Please let me know if you need additional information.

Tyler Curley, P.E.
EA Engineering, Science, and Technology, Inc., PBC
320 Gold Avenue, SW Suite 1300
Albuquerque, NM 87120
(505) 715-4422 work
(719) 688-9558 cell
tcurley@eaest.com

DAILY FIELD ACTIVITIES SUMMARY REPORT		
PROJECT NAME: KAFB Well 106239 Conveyance Line Installation		
Date: 12-7-17	Time Shift Beginning: 0630	Time Shift Ending: 1600
Project Number: 62599DM01		Contract/Task Order No.:
Client: USACE		Report By: Tyler Curley
Contractor(s): RMCI		Project Manager: Devon Jercinovic
Design Manager:		Oversight Manager: Tyler Curley
Design Engineer: George Nemeth		Site Engineer: Tyler Curley
Weather: Sunny 35° F		Logbook Number: NA
Personnel Onsite:	**Name:**	**Reason for Being Onsite:**
EA	Tyler Curley Earl Morse Kevin McKeage	Construction/Safety Oversight Construction/Safety Oversight CQM
RMCI	Jerry Patton Ed Hyde Phillip Johnson Felipe Hernandez Robert BeBault Jesus Moya	General Contractor
Caldon Seeding	Michael Moya Fabian Rodriguez Jose Palma	Seeding
Ashai	Chris Acosta (Harrington) Robert Cosgrove John Galvin	Leak Detection Install Guidance

Work Performed:

Planned Activities:

- Continue mulching
- Install the leak detection wire

Completed Activities:

- Continued mulching along Ridgecrest
- Installed and tested the leak detection system

Material Deliveries:

- Gravel Mulch

Construction Quality Control Activities or Samples Collected:

- Leak detection testing

Observations or Possible Variations from Specifications:

- None

Anticipated Activities for the Following Day:	
• Continue mulching • Site clean up **Planned Material Deliveries:** • Gravel mulch	
Contractor Reports, Manifests, Documents Reviewed and Logged:	
• None	
Report Completed By:	
Tyler Curley	Date: 7 December 2017

DAILY REPORT

(ATTACH ADDITIONAL SHEETS IF NECESSARY)

CONTRACT NAME:	Kirtland AFB Bulk Fuels Facility Expansion of Dissolved Plume GWTS Design	REPORT NO:	029
CONTRACT NUMBER:	W912DR-12-D-0006	REPORT DATE:	07 DEC 17
REVISION NUMBER:	-	REVISION DATE:	-
TASK ORDER NUMBER:	DM01	PROJECT NAME / LOCATION:	Kirtland BFF
PROJECT NUMBER:	62599DM01	PROJECT DESCRIPTION:	Installation of KAFB-106239 Conveyance Line
PROJECT MANAGER:	Devon Jercinovic	FIELD QUALITY MANAGER:	Kevin McKenzie
CONSTRUCTION MANAGER:	Tyler Curley	SITE SAFETY MANAGER:	Tyler Curley

AM WEATHER:	Cloudy Cold	PM WEATHER:	Cloudy Cold	MAX TEMP (F):	38		

SUMMARY OF WORK PERFORMED TODAY

CQM Inspection of Leak Detection Installation and testing.

HEALTH AND SAFETY REPORT

SAFETY ACTIONS TAKEN TODAY/SAFETY INSPECTIONS CONDUCTED (Include Observations, Safety Violations, Corrective Instructions Given, Corrective Actions Taken, and Results of Safety Inspections Conducted:

See CM's Daily Report

TAILGATE TOPICS:

"

SAFE BEHAVIOR OBSERVATIONS/SELF-ASSESSMENTS:

"

OPERATIONS/PRODUCTION REPORT

WORK FORCE – CONTRACTOR AND SUBCONTRACTOR

Company	Cumulative Total of Work Hours From Previous Report	Total Hours Today	Total Work Hours From Start of Injection Event
See CM's Daily Report			

EQUIPMENT ON HAND

Description of Equipment	Make/Model/ Manufacturer	Equipment ID Number	Inspection Performed By
Water Truck	Colorado Kenworth	4610	Robert Behan II
Backhoe	John Deere 5J310	1415	Jesus Moya
Bobcat	Caterpillar T550	961697	Jesus Moya
Skidsteer	John Deere 323D	131453	Jesus Moya

COMMENTS (acceptance status, inspection findings, etc.):

OK

WORK AND/OR TESTS ACCOMPLISHED OR IN PROGRESS

Performed Work/Test for Today: See CM's Daily Report

Planned Work/Test for Tomorrow: "

Planned Work/Test for Next Week: "

CHANGED CONDITIONS/DELAY/CONFLICTS ENCOUNTERED (List any conflicts with the project [i.e., scope of work and/or drawings], delays to the project attributable to site and weather conditions, etc. "

VISITORS AND DISCUSSIONS: "

QUALITY CONTROL REPORT

MATERIALS DELIVERED TO JOB SITE

Quantity/Volume/ Weight	Description of Materials Received	Make/Model/ Manufacturer	Material Lot Number	Inspection Performed By
12 Truck Loads	Grey Gravel	Duke City Redi-Mix	—	TC

COMMENTS (acceptance status, inspection findings, etc.): Meets Submittal requirements.

INSPECTIONS PERFORMED

Task/Activity Inspected	Inspection Performed	Findings
Leak Detection Install	Visual	OK

TESTS PERFORMED

Task/Activity Tested	Test Performed	Test Results (Pass/Fail) - Criteria
Leak Detection	Tightness Testing	Passed. Testing Forms to be provided later.

QUALITY ISSUES AND RESOLUTIONS: None

SUBMITTALS INSPECTION / REVIEW

Submittal No.	Submittal Description	Specification/Plan Reference	Submittal Approved?		Comment/Reason/Action
NA	Daily Report	–	Yes ☐	No ☐	Pending
NA	SBO	–	Yes ☐	No ☐	Pending
NA	PTSP	–	Yes ☐	No ☐	Pending

REGULATORY COMPLIANCE REPORT							
PERMIT INSPECTIONS PERFORMED: None							
WASTE ACCUMULATION/STOCKPILE AREA INSPECTION							
Inspection Performed By:	N/A			Signature of Inspector:			
Accumulation / Stockpile Area Inspected:							
No of Bins:		No of Tankers		No of Roll-Off Boxes:		No. of Tanks	
Inspection Results: N/A							
GENERAL COMMENTS							
General Comments: (rework, directives, etc.): OK							
ATTACHMENTS							
List of Attachments: (examples, as applicable: submittals, meeting minutes, safety meeting minutes, COCs, weight tickets, manifests, profiles, rework item list, RFIs, DCNs, photographs, etc.): Photo log. Testing Forms to be submitted at a later Date							
NOTE: Write all entries legibly in ink. Line out all unused portions or designate as "not applicable". Preparer signs first and last name on each completed daily report. This form may be filled out electronically and signed electronically.				PREPARER'S SIGNATURE		07DEC17 DATE	

Location: Station 19+90
Description: Pulling Leak Detection
Date: 07 December 2017 Direction: Down

Location: Station 19+90
Description: Grey Gravel Stockpile
Date: 07 December 2017 Direction: Down

EA Engineering, Science, and Technology, Inc

Employee/Visitor Register and Safety Brief

Date: 12-7-17

Site Entry/Exit		Name (Printed)	Signature	Company
Time In	Time Out			
0630		Tyler Curley		EA
630		Jerry Patton		RMCI
6:30		Robert BeBault		RMCI
6:30		Felipe Hernandez		RMCI
6:30		JESUS Moyer		RMCI
6:30		Hyde		RMCI
7:00		Michael Moya		caldon seeding
7:00		Phillip Johnson		RMCI
630.		Jose a. Palma		
6:3		Fabian Rodriguez		
7:15		Robert Cosgrove		RMCI
7:15		John Colvin		ASPH. PAV.
715		CHRIS ACOSTA		HARRINGTON
1130		Earl Morse		EA

EA ENGINEERING, SCIENCE AND TECHNOLOGY, INC.
SAFETY MEETING REPORT

Date: 12-7-17	**Time:** 0630	**Duration of meeting:** 10min	**Project #** 65801.01
Location: KAFB Well 106239		**Task:** Conveyance Line Install	

Type of meeting: X **Daily** ____ **Weekly** ____ **Monthly** ____ **Other:**_____

Items/Issues discussed:

1. Traffic Issues
2. Proper PPE
3. Slips/trips/falls
4. Cold stress
5.

Attach minutes of safety meeting if taken.

Safety questions/issues raised:	Actions/Follow-up needed:
1. None	
2.	
3.	
4.	
5.	
6.	

Remarks: None

Meeting conducted by:
Tyler Curley

EA Engineering, Science, and Technology, Inc.

DAILY SAFETY INSPECTION CHECKLIST (TO BE COMPLETED EACH DAY OF CONSTRUCTION OR HTRW SITE ACTIVITIES)

Site: KAFB Well 106239
Location: Ridgecrest Dr
Project No.: 60599101.01
Client: USACE

Prepared by SSHO: Tyler Curley
Project Manager: Devon Jerkinovic
Date: 12-7-17

Rating	Y	N	N/A	Comments/Immediate Corrective Action[1]
Accident Prevention Plan (APP) and Site Safety and Health Plan (SSHP) General Requirements				
Are there new onsite personnel? • Did they receive pre-entry briefing and are their names recorded in field logbook or daily log? • Was the USACE PM made aware of the new personnel. • Required training and medical surveillance documentation received (e.g., 40-hr, 8 hr, etc.)?		✓		
Did personnel sign in/out of site?	✓			
Daily tailgate safety meetings conducted and documented?	✓			
Were new activities performed today? Were hazards identified, discussed during the daily safety tailgate, and incorporated into revised APP/SSHP?		✓		
New materials brought on site? MSDSs available?		✓		
Exclusion (EZ), Contamination Reduction (CRZ), and Support Zones (SZ) delineated and enforced?	✓			
General housekeeping measures in place to prevent hazards?	✓			
Emergency Planning				
Were there any changes to emergency contact names, telephone numbers, or hospital? If so, were site personnel made aware and was information distributed/reposted.		✓		
Adequate safety equipment inventory available?	✓			
Fire extinguisher available (monthly inspection of extinguisher will suffice)	✓			
Eyewash station(s) functioning and in place (weekly inspection of eye wash station will suffice)?	✓			
First aid supplies available (weekly inspection of first aid kit will suffice)?	✓			
Communication equipment readily available for emergencies?	✓			
Any reported accidents/incidents at this site? If so, were accident reporting procedures followed?				
Air Monitoring				
Monitoring equipment specified in SSHP available and in working order? Air monitoring instrumentation for this site includes – check each if required/on site, note deficiencies in comments: • Combustible gas meter • Organic vapor analyzer • Contaminant specific analyzer for benzene (if total organic vapor concentrations exceed 0.5 ppm)	✓			
Monitoring equipment calibrated and calibration records	✓			

Y = Satisfactory or Yes; N = Unsatisfactory or No, N/A = Not applicable

Rating	Y	N	N/A	Comments/Immediate Corrective Action[1]
available?				
Environmental and personnel monitoring performed as specified in SSHP?	✓			
PPE				
Proper dermal protection worn by EA and subcontracted employees when handling/ contacting hazardous chemicals or contaminated environmental media?	✓			
Required PPE (hard hats, safety boots / shoes, eye protection with side shields, hearing protection) being worn by EA and subcontracted employees?	✓			
PPE inspection completed by SSHO?	✓			
Drill Rig Operations				
Daily rig inspection completed? Any equipment problems?	✓			
Drill rigs/elevated equipment maintaining minimum 10-ft distance from energized (50 kV) overhead power lines?	✓			
Investigation-derived Waste (IDW)				
Wastes properly staged, secured, and labeled at end of day?			✓	

Additional Comments:

Site Safety and Health Officer's Signature

12-7-17
Date

[1]If a deficiency is noted that cannot be immediately corrected, the SSHO will monitor the progress in correcting the deficiency and will document following:

- Date the deficiency was identified
- Description of the deficiency
- Name of the person responsible for correcting the deficiency
- Projected date of correction
- Actual date of correction.

HEALTH AND SAFETY ACTIVITY REPORT

Site: KAFB Well 106239 Location: Ridgecrest Dr

Weather Cond.: 40°F Onsite Hours: From 0630 To _____

Changes in PPE Levels[1]	Work Operations	Reasons for Change

Site Safety and Health Plan Violations	Corrective Action Specified	Corrective Action Taken [2](yes/no)

Observations and Comments:

Completed by: _____ Date:
Site Health and Safety Supervisor

[1]Only SSHO may change PPE levels, using only criteria specified in APP/SSHP.
[2]If a deficiency is noted that cannot be immediately corrected, the SSHO will monitor the progress in correcting the deficiency and will document following:

- Date the deficiency was identified
- Description of the deficiency
- Name of the person responsible for correcting the deficiency
- Projected date of correction
- Actual date of correction.

From:	Curley, Tyler
To:	"Trent.Simpler@usace.army.mil"; "Amy.E.Sanchez@usace.army.mil"; "Carlos.F.Salazar@usace.army.mil"; "Linda.Dreeland@usace.army.mil"; "Mark.J.Phaneuf@usace.army.mil"
Cc:	Jercinovic, Devon; McKeage, Kevin; Morse, Earl; Bowman, Matthew
Subject:	Activity Report for KAFB Well 106239 Conveyance Line Installation 08 December 2017
Date:	Friday, December 08, 2017 5:37:47 PM
Attachments:	Daily Field Activities Summary Report.pdf Photos 12-8-17.pdf

---

Issues Today 08 Friday December 2017:

- None

Resolution of Issues:

- None

Work Performed Today:

- Completed mulching along Ridgecrest
- Backfilled around leak detection pulling tees
- Painted (final coat) bollards and the steel wye in the junction vault
- Site clean up

Installation Completion to Date: 75%

Work Planned for 11 December 2017:

- Site clean up

Please let me know if you need additional information.

Tyler Curley, P.E.
EA Engineering, Science, and Technology, Inc., PBC
320 Gold Avenue, SW Suite 1300
Albuquerque, NM 87120
(505) 715-4422 work
(719) 688-9558 cell
tcurley@eaest.com

DAILY FIELD ACTIVITIES SUMMARY REPORT		
PROJECT NAME: KAFB Well 106239 Conveyance Line Installation		
Date: 12-8-17	Time Shift Beginning: 0630	Time Shift Ending: 1500
Project Number: 62599DM01		Contract/Task Order No.:
Client: USACE		Report By: Tyler Curley
Contractor(s): RMCI		Project Manager: Devon Jercinovic
Design Manager:		Oversight Manager: Tyler Curley
Design Engineer: George Nemeth		Site Engineer: Tyler Curley
Weather: Sunny 45° F		Logbook Number: NA
Personnel Onsite:	**Name:**	**Reason for Being Onsite:**
EA	Tyler Curley	Construction/Safety Oversight
RMCI	Jerry Patton Ed Hyde Felipe Hernandez Robert BeBault Jesus Moya	General Contractor
Caldon Seeding	Michael Moya Fabian Rodriguez Jose Palma	Seeding

Work Performed:

Planned Activities:

- Continue mulching
- Site clean up

Completed Activities:

- Completed mulching Ridgecrest
- Backfilled around leak detection pulling tees
- Painted (final coat) bollards and the steel wye in the junction vault
- Site clean up

Material Deliveries:

- Gravel Mulch

Construction Quality Control Activities or Samples Collected:

- None

Observations or Possible Variations from Specifications:

- None

Anticipated Activities for the Following Day:

- Site clean up

Planned Material Deliveries:

- None

Contractor Reports, Manifests, Documents Reviewed and Logged:	
• None	
Report Completed By:	
Tyler Curley	Date: 8 December 2017

310SJ

EA Engineering, Science, and Technology, Inc

Employee/Visitor Register and Safety Brief

Date: 12-8-17

Site Entry/Exit		Name (Printed)	Signature	Company
Time In	Time Out			
0630		Tyler Curley		EA
6:30	1200	Felipe Ll	Felipe Ll	RMCI
6:30	↓	Jesus Moya	Moya	RMCI
6:30	↓	Robert Bebout		RMCI
630	↓	ED Hyde		RMCI
730		Jose A Palma		
"		Michael Mora		Caldera Trucking
7:00		Fabian Rodriguez		Caldera Seeding
8:40	10:30	Earl Morse		EA
9:00	1130	Phillip Johnson		RMCI
1:28		Steve R Martinez		Bogan
1:28		Marco Lopez		Bogan

EA ENGINEERING, SCIENCE AND TECHNOLOGY, INC.
SAFETY MEETING REPORT

Date: 12-8-17	**Time:** 0630	**Duration of meeting:** 10min	**Project #** 65991.1101
Location: KAFB Well 106239		**Task:** Conveyance Line Install	

Type of meeting: X **Daily** ___ **Weekly** ___ **Monthly** ___ **Other:** _____

Items/Issues discussed:

1. Slips trips falls
2. Traffic
3. Cold stress
4. Pinch points
5. Hospital Routes

Attach minutes of safety meeting if taken.

Safety questions/issues raised:	**Actions/Follow-up needed:**
1. None	
2.	
3.	
4.	
5.	
6.	

Remarks: None

Meeting conducted by:
Tyler Curley

EA Engineering, Science, and Technology, Inc.

DAILY SAFETY INSPECTION CHECKLIST (TO BE COMPLETED EACH DAY OF CONSTRUCTION OR HTRW SITE ACTIVITIES)

Site: KAFB Well 106239
Location: Ridgecrest Dr
Project No.: C03599DM01
Client: USACE

Prepared by SSHO: Tyler Curley
Project Manager: Devon Jercinovic
Date : 12-6-17

Rating	Y	N	N/A	Comments/Immediate Corrective Action[1]
Accident Prevention Plan (APP) and Site Safety and Health Plan (SSHP) General Requirements				
Are there new onsite personnel? • Did they receive pre-entry briefing and are their names recorded in field logbook or daily log? • Was the USACE PM made aware of the new personnel. • Required training and medical surveillance documentation received (e.g., 40-hr, 8 hr, etc.)?		✓		
Did personnel sign in/out of site?	✓			
Daily tailgate safety meetings conducted and documented?	✓			
Were new activities performed today? Were hazards identified, discussed during the daily safety tailgate, and incorporated into revised APP/SSHP?		✓		
New materials brought on site? MSDSs available?		✓		
Exclusion (EZ), Contamination Reduction (CRZ), and Support Zones (SZ) delineated and enforced?	✓			
General housekeeping measures in place to prevent hazards?	✓			
Emergency Planning				
Were there any changes to emergency contact names, telephone numbers, or hospital? If so, were site personnel made aware and was information distributed/reposted.	✓	✓		
Adequate safety equipment inventory available?	✓			
Fire extinguisher available (monthly inspection of extinguisher will suffice)	✓			
Eyewash station(s) functioning and in place (weekly inspection of eye wash station will suffice)?	✓			
First aid supplies available (weekly inspection of first aid kit will suffice)?	✓			
Communication equipment readily available for emergencies?	✓			
Any reported accidents/incidents at this site? If so, were accident reporting procedures followed?		✓		
Air Monitoring				
Monitoring equipment specified in SSHP available and in working order? Air monitoring instrumentation for this site includes – check each if required/on site, note deficiencies in comments: • Combustible gas meter • Organic vapor analyzer • Contaminant specific analyzer for benzene (if total organic vapor concentrations exceed 0.5 ppm)	✓			
Monitoring equipment calibrated and calibration records	✓			

Y = Satisfactory or Yes; N = Unsatisfactory or No, N/A = Not applicable

Rating	Y	N	N/A	Comments/Immediate Corrective Action[1]
available?				
Environmental and personnel monitoring performed as specified in SSHP?	✓			
PPE				
Proper dermal protection worn by EA and subcontracted employees when handling/ contacting hazardous chemicals or contaminated environmental media?	✓			
Required PPE (hard hats, safety boots / shoes, eye protection with side shields, hearing protection) being worn by EA and subcontracted employees?	✓			
PPE inspection completed by SSHO?	✓			
Drill Rig Operations				
Daily rig inspection completed? Any equipment problems?	✓			
Drill rigs/elevated equipment maintaining minimum 10-ft distance from energized (50 kV) overhead power lines?	✓			
Investigation-derived Waste (IDW)				
Wastes properly staged, secured, and labeled at end of day?			✓	

Additional Comments:

Site Safety and Health Officer's Signature

12-8-17

Date

[1]If a deficiency is noted that cannot be immediately corrected, the SSHO will monitor the progress in correcting the deficiency and will document following:

- Date the deficiency was identified
- Description of the deficiency
- Name of the person responsible for correcting the deficiency
- Projected date of correction
- Actual date of correction.

HEALTH AND SAFETY ACTIVITY REPORT

Site: KAFB Well 106239 Location: Ridgecrest Dr

Weather Cond.: Sunny Onsite Hours: From 0630 To _____

Changes in PPE Levels[1]	Work Operations	Reasons for Change
None		

Site Safety and Health Plan Violations	Corrective Action Specified	Corrective Action Taken [2](yes/no)
None		

Observations and Comments:
None

Completed by: Tyler Curley Date: 12-8-17
Site Health and Safety Supervisor

[1]Only SSHO may change PPE levels, using only criteria specified in APP/SSHP.
[2]If a deficiency is noted that cannot be immediately corrected, the SSHO will monitor the progress in correcting the deficiency and will document following:

- Date the deficiency was identified
- Description of the deficiency
- Name of the person responsible for correcting the deficiency
- Projected date of correction
- Actual date of correction.

From:	Curley, Tyler
To:	"Trent.Simpler@usace.army.mil"; "Amy.E.Sanchez@usace.army.mil"; "Carlos.F.Salazar@usace.army.mil"; "Linda.Dreeland@usace.army.mil"; "Mark.J.Phaneuf@usace.army.mil"
Cc:	Jercinovic, Devon; McKeage, Kevin; Morse, Earl; Bowman, Matthew
Subject:	Activity Report for KAFB Well 106239 Conveyance Line Installation 11 December 2017
Date:	Monday, December 11, 2017 5:51:11 PM
Attachments:	Daily Field Activities Summary Report.pdf Photos 12-11-17.pdf

---

Issues Today 11 Monday December 2017:

- None

Resolution of Issues:

- None

Work Performed Today:

- Site clean up
- Repair of the track-out pad in the VA contractor yards

Installation Completion to Date: 75%

Work Planned for 12 December 2017:

- Site clean up

Please let me know if you need additional information.

Tyler Curley, P.E.
EA Engineering, Science, and Technology, Inc., PBC
320 Gold Avenue, SW Suite 1300
Albuquerque, NM 87120
(505) 715-4422 work
(719) 688-9558 cell
tcurley@eaest.com

DAILY FIELD ACTIVITIES SUMMARY REPORT		
PROJECT NAME: KAFB Well 106239 Conveyance Line Installation		
Date: 12-11-17	Time Shift Beginning: 0630	Time Shift Ending: 1530
Project Number: 62599DM01		Contract/Task Order No.:
Client: USACE		Report By: Tyler Curley
Contractor(s): RMCI		Project Manager: Devon Jercinovic
Design Manager:		Oversight Manager: Tyler Curley
Design Engineer: George Nemeth		Site Engineer: Tyler Curley
Weather: Sunny 58° F		Logbook Number: NA
Personnel Onsite:	**Name:**	**Reason for Being Onsite:**
EA	Tyler Curley	Construction/Safety Oversight
RMCI	Jerry Patton Ed Hyde Felipe Hernandez Robert BeBault	General Contractor

Work Performed:

Planned Activities:

- Site clean up

Completed Activities:

- Site clean up
- Repair the track-out pad

Material Deliveries:

- Rock for the track-out pad

Construction Quality Control Activities or Samples Collected:

- None

Observations or Possible Variations from Specifications:

- None

Anticipated Activities for the Following Day:

- Site clean up

Planned Material Deliveries:

- None

Contractor Reports, Manifests, Documents Reviewed and Logged:

- None

Report Completed By:	
Tyler Curley	Date: 11 December 2017

EA Engineering, Science, and Technology, Inc

Employee/Visitor Register and Safety Brief				
Date: 12-11-17				
Site Entry/Exit		Name (Printed)	Signature	Company
Time In	Time Out			
0630	1530	Tyler Cutley		EA
6:30	|	Robert DeBault		RMCI
6:30	|	Jerry Patton		RMCI
6:30	|	Felipe Cl		
6:30	↓	ED Hyde		RMCI

EA ENGINEERING, SCIENCE AND TECHNOLOGY, INC.
SAFETY MEETING REPORT

Date: 12-11-17	**Time:** 0700	**Duration of meeting:** 10	**Project #** 605901.M01
Location: ~~Rd~~ KAFB Well 100739		**Task:** Conveyance Line Install	

Type of meeting: X Daily ___ Weekly ___ Monthly ___ Other: _____

Items/Issues discussed:

1. Slips, trips, falls
2. Traffic hazards
3. Crushing hazards
4. Pinch points
5.

Attach minutes of safety meeting if taken.

Safety questions/issues raised:	Actions/Follow-up needed:
1. None	
2.	
3.	
4.	
5.	
6.	

Remarks:
None

Meeting conducted by:
Tyler Curley

EA Engineering, Science, and Technology, Inc.

DAILY SAFETY INSPECTION CHECKLIST
(TO BE COMPLETED EACH DAY OF CONSTRUCTION OR HTRW SITE ACTIVITIES)

Site: KAFB Well 106039
Location: Ridgecrest Dr.
Project No.: 62599DM01
Client: USACE

Prepared by SSHO: Tyler Curley
Project Manager: Deven Jercinovic
Date: 12-11-17

Rating	Y	N	N/A	Comments/Immediate Corrective Action[1]
Accident Prevention Plan (APP) and Site Safety and Health Plan (SSHP) General Requirements				
Are there new onsite personnel? • Did they receive pre-entry briefing and are their names recorded in field logbook or daily log? • Was the USACE PM made aware of the new personnel. • Required training and medical surveillance documentation received (e.g., 40-hr, 8 hr, etc.)?		✓		
Did personnel sign in/out of site?	✓			
Daily tailgate safety meetings conducted and documented?	✓			
Were new activities performed today? Were hazards identified, discussed during the daily safety tailgate, and incorporated into revised APP/SSHP?		✓		
New materials brought on site? MSDSs available?		✓		
Exclusion (EZ), Contamination Reduction (CRZ), and Support Zones (SZ) delineated and enforced?	✓			
General housekeeping measures in place to prevent hazards?	✓			
Emergency Planning				
Were there any changes to emergency contact names, telephone numbers, or hospital? If so, were site personnel made aware and was information distributed/reposted.		✓		
Adequate safety equipment inventory available?	✓			
Fire extinguisher available (monthly inspection of extinguisher will suffice)	✓			
Eyewash station(s) functioning and in place (weekly inspection of eye wash station will suffice)?	✓			
First aid supplies available (weekly inspection of first aid kit will suffice)?	✓			
Communication equipment readily available for emergencies?	✓			
Any reported accidents/incidents at this site? If so, were accident reporting procedures followed?				
Air Monitoring				
Monitoring equipment specified in SSHP available and in working order? Air monitoring instrumentation for this site includes – check each if required/on site, note deficiencies in comments: • Combustible gas meter • Organic vapor analyzer • Contaminant specific analyzer for benzene (if total organic vapor concentrations exceed 0.5 ppm)	✓			
Monitoring equipment calibrated and calibration records	✓			

Y = Satisfactory or Yes; N = Unsatisfactory or No, N/A = Not applicable

Rating	Y	N	N/A	Comments/Immediate Corrective Action[1]
available?				
Environmental and personnel monitoring performed as specified in SSHP?	✓			
PPE				
Proper dermal protection worn by EA and subcontracted employees when handling/ contacting hazardous chemicals or contaminated environmental media?	✓			
Required PPE (hard hats, safety boots / shoes, eye protection with side shields, hearing protection) being worn by EA and subcontracted employees?	✓			
PPE inspection completed by SSHO?	✓			
Drill Rig Operations				
Daily rig inspection completed? Any equipment problems?	✓			
Drill rigs/elevated equipment maintaining minimum 10-ft distance from energized (50 kV) overhead power lines?	✓			
Investigation-derived Waste (IDW)				
Wastes properly staged, secured, and labeled at end of day?			✓	

Additional Comments:

Site Safety and Health Officer's Signature

12-11-17

Date

[1]If a deficiency is noted that cannot be immediately corrected, the SSHO will monitor the progress in correcting the deficiency and will document following:

- Date the deficiency was identified
- Description of the deficiency
- Name of the person responsible for correcting the deficiency
- Projected date of correction
- Actual date of correction.

HEALTH AND SAFETY ACTIVITY REPORT

Site: KAFB Well 100239 Location: Ridgecrest Dr.

Weather Cond.: Sunny Onsite Hours: From 0630 To 1930

Changes in PPE Levels[1]	Work Operations	Reasons for Change
None		

Site Safety and Health Plan Violations	Corrective Action Specified	Corrective Action Taken [2](yes/no)
None		

Observations and Comments:

None

Completed by: Tyler Curley Date: 9-18-17

Site Health and Safety Supervisor

[1]Only SSHO may change PPE levels, using only criteria specified in APP/SSHP.

[2]If a deficiency is noted that cannot be immediately corrected, the SSHO will monitor the progress in correcting the deficiency and will document following:

- Date the deficiency was identified
- Description of the deficiency
- Name of the person responsible for correcting the deficiency
- Projected date of correction
- Actual date of correction.

From:	Curley, Tyler
To:	"Trent.Simpler@usace.army.mil"; "Amy.E.Sanchez@usace.army.mil"; "Carlos.F.Salazar@usace.army.mil"; "Linda.Dreeland@usace.army.mil"; "Mark.J.Phaneuf@usace.army.mil"
Cc:	Jercinovic, Devon; McKeage, Kevin; Morse, Earl; Bowman, Matthew
Subject:	Activity Report for KAFB Well 106239 Conveyance Line Installation 12 December 2017
Date:	Tuesday, December 12, 2017 10:20:17 PM
Attachments:	Daily Field Activities Summary Report.pdf

Issues Today 12 Tuesday December 2017:

- None

Resolution of Issues:

- None

Work Performed Today:

- Site clean up
- COA final building inspection (well vault)

Installation Completion to Date: 75%

Work Planned for 13 December 2017:

- Site clean up
- Demob

Please let me know if you need additional information.

Tyler Curley, P.E.
EA Engineering, Science, and Technology, Inc., PBC
320 Gold Avenue, SW Suite 1300
Albuquerque, NM 87120
(505) 715-4422 work
(719) 688-9558 cell
tcurley@eaest.com

DAILY FIELD ACTIVITIES SUMMARY REPORT		
PROJECT NAME: KAFB Well 106239 Conveyance Line Installation		
Date: 12-12-17	Time Shift Beginning: 0700	Time Shift Ending: 1530
Project Number: 62599DM01		Contract/Task Order No.:
Client: USACE		Report By: Tyler Curley
Contractor(s): RMCI		Project Manager: Devon Jercinovic
Design Manager:		Oversight Manager: Tyler Curley
Design Engineer: George Nemeth		Site Engineer: Tyler Curley
Weather: Sunny 55° F		Logbook Number: NA
Personnel Onsite:	**Name:**	**Reason for Being Onsite:**
EA	Tyler Curley	Construction/Safety Oversight
RMCI	Jerry Patton Ed Hyde Felipe Hernandez Robert BeBault	General Contractor
City of Albuquerque	Mark Saiz	Inspection

Work Performed:

Planned Activities:

- Site clean up

Completed Activities:

- Site clean up
- COA final building inspection (well vault)

Material Deliveries:

- None

Construction Quality Control Activities or Samples Collected:

- None

Observations or Possible Variations from Specifications:

- None

Anticipated Activities for the Following Day:

- Site clean up
- Demob

Planned Material Deliveries:

- None

Contractor Reports, Manifests, Documents Reviewed and Logged:

- None

Report Completed By:

Tyler Curley	Date: 12 December 2017

EA Engineering, Science, and Technology, Inc

Employee/Visitor Register and Safety Brief				
Date: 12-12-17				
Site Entry/Exit		Name (Printed)	Signature	Company
Time In	Time Out			
07:00	0900	Tyler Curley		EA
7:00	1530	Jerry Patton		RMCI
7:00	↓	Felipe Hernandez		RMCI
7:00	↓	[illegible]		RMCI
10:50	11:00	Mark Starr		City of Alameda

EA ENGINEERING, SCIENCE AND TECHNOLOGY, INC.
SAFETY MEETING REPORT

Date: 12-12-17	**Time:** 0700	**Duration of meeting:** 5min	**Project #** [illegible]
Location: KAFB well 106239		**Task:** Conveyance Line Install	

Type of meeting: X **Daily** ____ **Weekly** ____ **Monthly** ____ **Other:**____

Items/Issues discussed:

1. Traffic
2. crushing hazards
3. slip, trips, falls
4. pinch points
5.

Attach minutes of safety meeting if taken.

Safety questions/issues raised:	**Actions/Follow-up needed:**
1. None	
2.	
3.	
4.	
5.	
6.	

Remarks:

Meeting conducted by:
Tyler Curley

EA Engineering, Science, and Technology, Inc

Employee/Visitor Register and Safety Brief				
Date: 12-12-17				
Site Entry/Exit		Name (Printed)	Signature	Company
Time In	Time Out			
07:00	0900	Tyler Curley		EA
7:00	1530	Jerry Patton		RMCI
7:00	↓	Felipe Hernandez		RMCI
7:00	↓	[illegible]		RMCI
10:50	11:00	Mark Starr		City of Alameda

EA ENGINEERING, SCIENCE AND TECHNOLOGY, INC.
SAFETY MEETING REPORT

Date: 12-12-17	**Time:** 0700	**Duration of meeting:** 5min	**Project #** [illegible]
Location: KAFB well 106239		**Task:** Conveyance Line Install	

Type of meeting: X **Daily** ____ **Weekly** ____ **Monthly** ____ **Other:**____

Items/Issues discussed:

1. Traffic
2. crushing hazards
3. slip, trips, falls
4. pinch points
5.

Attach minutes of safety meeting if taken.

Safety questions/issues raised:	**Actions/Follow-up needed:**
1. None	
2.	
3.	
4.	
5.	
6.	

Remarks:

Meeting conducted by:
Tyler Curley

EA Engineering, Science, and Technology, Inc.

DAILY SAFETY INSPECTION CHECKLIST (TO BE COMPLETED EACH DAY OF CONSTRUCTION OR HTRW SITE ACTIVITIES)

Site: KAFB Well 106539
Location: Relocated Dr
Project No.: 60599.0101
Client: USACE

Prepared by SSHO: Tyler Corley
Project Manager: Peter Jeremiah
Date: 12-10-18

Rating	Y	N	N/A	Comments/Immediate Corrective Action[1]
Accident Prevention Plan (APP) and Site Safety and Health Plan (SSHP) General Requirements				
Are there new onsite personnel? • Did they receive pre-entry briefing and are their names recorded in field logbook or daily log? • Was the USACE PM made aware of the new personnel. • Required training and medical surveillance documentation received (e.g., 40-hr, 8 hr, etc.)?		✓		
Did personnel sign in/out of site?	✓			
Daily tailgate safety meetings conducted and documented?	✓			
Were new activities performed today? Were hazards identified, discussed during the daily safety tailgate, and incorporated into revised APP/SSHP?		✓		
New materials brought on site? MSDSs available?		✓		
Exclusion (EZ), Contamination Reduction (CRZ), and Support Zones (SZ) delineated and enforced?	✓			
General housekeeping measures in place to prevent hazards?	✓			
Emergency Planning				
Were there any changes to emergency contact names, telephone numbers, or hospital? If so, were site personnel made aware and was information distributed/reposted.		✓		
Adequate safety equipment inventory available?	✓			
Fire extinguisher available (monthly inspection of extinguisher will suffice)	✓			
Eyewash station(s) functioning and in place (weekly inspection of eye wash station will suffice)?	✓			
First aid supplies available (weekly inspection of first aid kit will suffice)?	✓			
Communication equipment readily available for emergencies?	✓			
Any reported accidents/incidents at this site? If so, were accident reporting procedures followed?		✓		
Air Monitoring				
Monitoring equipment specified in SSHP available and in working order? Air monitoring instrumentation for this site includes – check each if required/on site, note deficiencies in comments: • Combustible gas meter • Organic vapor analyzer • Contaminant specific analyzer for benzene (if total organic vapor concentrations exceed 0.5 ppm)	✓			
Monitoring equipment calibrated and calibration records	✓			

Y = Satisfactory or Yes; N = Unsatisfactory or No, N/A = Not applicable

Rating	Y	N	N/A	Comments/Immediate Corrective Action[1]
available?	✓			
Environmental and personnel monitoring performed as specified in SSHP?	✓			
PPE				
Proper dermal protection worn by EA and subcontracted employees when handling/ contacting hazardous chemicals or contaminated environmental media?	✓			
Required PPE (hard hats, safety boots / shoes, eye protection with side shields, hearing protection) being worn by EA and subcontracted employees?	✓			
PPE inspection completed by SSHO?	✓			
Drill Rig Operations				
Daily rig inspection completed? Any equipment problems?	✓			
Drill rigs/elevated equipment maintaining minimum 10-ft distance from energized (50 kV) overhead power lines?	✓			
Investigation-derived Waste (IDW)				
Wastes properly staged, secured, and labeled at end of day?			✓	

Additional Comments:

Site Safety and Health Officer's Signature

10-10-17

Date

[1]If a deficiency is noted that cannot be immediately corrected, the SSHO will monitor the progress in correcting the deficiency and will document following:

- Date the deficiency was identified
- Description of the deficiency
- Name of the person responsible for correcting the deficiency
- Projected date of correction
- Actual date of correction.

HEALTH AND SAFETY ACTIVITY REPORT

Site: KAFB Well 10C239 Location: Ridgecrest Dr

Weather Cond.: Sunny 55°F Onsite Hours: From 0700 To 1500

Changes in PPE Levels[1]	Work Operations	Reasons for Change
None		

Site Safety and Health Plan Violations	Corrective Action Specified	Corrective Action Taken [2] (yes/no)
None		

Observations and Comments:

None

Completed by: Tyler Curley Date: 12-12-17

Site Health and Safety Supervisor

[1] Only SSHO may change PPE levels, using only criteria specified in APP/SSHP.

[2] If a deficiency is noted that cannot be immediately corrected, the SSHO will monitor the progress in correcting the deficiency and will document following:

- Date the deficiency was identified
- Description of the deficiency
- Name of the person responsible for correcting the deficiency
- Projected date of correction
- Actual date of correction.

From: Curley, Tyler
To: "Trent.Simpler@usace.army.mil"; "Amy.E.Sanchez@usace.army.mil"; "Carlos.F.Salazar@usace.army.mil"; "Linda.Dreeland@usace.army.mil"; "Mark.J.Phaneuf@usace.army.mil"
Cc: Jercinovic, Devon; McKeage, Kevin; Morse, Earl; Bowman, Matthew
Subject: Activity Report for KAFB Well 106239 Conveyance Line Installation
Date: Wednesday, December 13, 2017 3:06:28 PM

USACE team,

RMCI is currently demobing from the site. There will be not construction performed on site until next week.

Please let me know if you need additional information.

Tyler Curley, P.E.
EA Engineering, Science, and Technology, Inc., PBC
320 Gold Avenue, SW Suite 1300
Albuquerque, NM 87120
(505) 715-4422 work
(719) 688-9558 cell
tcurley@eaest.com

EA Engineering, Science, and Technology, Inc

Employee/Visitor Register and Safety Brief				
Date: 12-13-17				
Site Entry/Exit		Name (Printed)	Signature	Company
Time In	Time Out			
0700	0930	Tyler Curley		EA
0700	0930	Matt Bowman		EA
700	1800	Ed Hyde		RMCI
740		Robert Aarrie		RMCI
8:00		Jerry Patton		RMCI
8:00		Felipe Hernandez		RMCI

EA ENGINEERING, SCIENCE AND TECHNOLOGY, INC.
SAFETY MEETING REPORT

Date: 12-13-17	**Time:** 0800	**Duration of meeting:** 5min	**Project #** 65549.0101
Location: KAFB well 106239		**Task:** Conveyance Line Install	

Type of meeting: X **Daily** ___ **Weekly** ___ **Monthly** ___ **Other:** _____

Items/Issues discussed:

1. Traffic
2. Moving equipment
3. crushing hazards
4.
5.

Attach minutes of safety meeting if taken.

Safety questions/issues raised:	**Actions/Follow-up needed:**
1. None	
2.	
3.	
4.	
5.	
6.	

Remarks:

Meeting conducted by:
Tyler Carley

EA Engineering, Science, and Technology, Inc.

DAILY SAFETY INSPECTION CHECKLIST (TO BE COMPLETED EACH DAY OF CONSTRUCTION OR HTRW SITE ACTIVITIES)

Site: KAFB Well 066239
Location: Ridgecrest DS
Project No.: 62599DM01
Client: USACE

Prepared by SSHO: Tyler Curley
Project Manager: Devon Jerconovic
Date: 12-13-17

Rating	Y	N	N/A	Comments/Immediate Corrective Action[1]
Accident Prevention Plan (APP) and Site Safety and Health Plan (SSHP) General Requirements				
Are there new onsite personnel? • Did they receive pre-entry briefing and are their names recorded in field logbook or daily log? • Was the USACE PM made aware of the new personnel. • Required training and medical surveillance documentation received (e.g., 40-hr, 8 hr, etc.)?		✓		
Did personnel sign in/out of site?	✓			
Daily tailgate safety meetings conducted and documented?	✓			
Were new activities performed today? Were hazards identified, discussed during the daily safety tailgate, and incorporated into revised APP/SSHP?		✓		
New materials brought on site? MSDSs available?		✓		
Exclusion (EZ), Contamination Reduction (CRZ), and Support Zones (SZ) delineated and enforced?	✓			
General housekeeping measures in place to prevent hazards?	✓			
Emergency Planning				
Were there any changes to emergency contact names, telephone numbers, or hospital? If so, were site personnel made aware and was information distributed/reposted.		✓		
Adequate safety equipment inventory available?	✓			
Fire extinguisher available (monthly inspection of extinguisher will suffice)	✓			
Eyewash station(s) functioning and in place (weekly inspection of eye wash station will suffice)?	✓			
First aid supplies available (weekly inspection of first aid kit will suffice)?	✓			
Communication equipment readily available for emergencies?	✓			
Any reported accidents/incidents at this site? If so, were accident reporting procedures followed?		✓		
Air Monitoring				
Monitoring equipment specified in SSHP available and in working order? Air monitoring instrumentation for this site includes – check each if required/on site, note deficiencies in comments: • Combustible gas meter • Organic vapor analyzer • Contaminant specific analyzer for benzene (if total organic vapor concentrations exceed 0.5 ppm)		✓		
Monitoring equipment calibrated and calibration records		✓		

Y = Satisfactory or Yes; N = Unsatisfactory or No, N/A = Not applicable

Rating	Y	N	N/A	Comments/Immediate Corrective Action[1]
available?		✓		
Environmental and personnel monitoring performed as specified in SSHP?		✓		
PPE				
Proper dermal protection worn by EA and subcontracted employees when handling/ contacting hazardous chemicals or contaminated environmental media?	✓			
Required PPE (hard hats, safety boots / shoes, eye protection with side shields, hearing protection) being worn by EA and subcontracted employees?	✓			
PPE inspection completed by SSHO?	✓			
Drill Rig Operations				
Daily rig inspection completed? Any equipment problems?	✓			
Drill rigs/elevated equipment maintaining minimum 10-ft distance from energized (50 kV) overhead power lines?	✓			
Investigation-derived Waste (IDW)				
Wastes properly staged, secured, and labeled at end of day?			✓	

Additional Comments:

Site Safety and Health Officer's Signature

12-13-17

Date

[1]If a deficiency is noted that cannot be immediately corrected, the SSHO will monitor the progress in correcting the deficiency and will document following:

- Date the deficiency was identified
- Description of the deficiency
- Name of the person responsible for correcting the deficiency
- Projected date of correction
- Actual date of correction.

HEALTH AND SAFETY ACTIVITY REPORT

Site: KAFB Well 106239 Location: Ridgecrest Dr

Weather Cond.: Sunny 55°F Onsite Hours: From 0800 To 1000

Changes in PPE Levels[1]	Work Operations	Reasons for Change
None		

Site Safety and Health Plan Violations	Corrective Action Specified	Corrective Action Taken [2] (yes/no)
None		

Observations and Comments:

None

Completed by: Tyler Carley Date: 12-13-17

Site Health and Safety Supervisor

[1] Only SSHO may change PPE levels, using only criteria specified in APP/SSHP.

[2] If a deficiency is noted that cannot be immediately corrected, the SSHO will monitor the progress in correcting the deficiency and will document following:

- Date the deficiency was identified
- Description of the deficiency
- Name of the person responsible for correcting the deficiency
- Projected date of correction
- Actual date of correction.

From:	Curley, Tyler
To:	"Trent.Simpler@usace.army.mil"; "Amy.E.Sanchez@usace.army.mil"; "Carlos.F.Salazar@usace.army.mil"; "Linda.Dreeland@usace.army.mil"; "Mark.J.Phaneuf@usace.army.mil"
Cc:	Jercinovic, Devon; McKeage, Kevin; Morse, Earl; Bowman, Matthew
Subject:	Activity Report for KAFB Well 106239 Conveyance Line Installation 20 December 2017
Date:	Wednesday, December 20, 2017 6:17:05 PM
Attachments:	Daily Field Activities Summary Report.pdf Photos 12-20-17.pdf 030 CQM Daily Report 20DEC17.pdf

---

Issues Today 20 Wednesday December 2017:

- None

Resolution of Issues:

- None

Work Performed Today:

- Installed inline components within the well vault
- Began installing the MV cable

Installation Completion to Date: 80%

Work Planned for 21 December 2017:

- MV cable installation
    - Wilson Electric will install the pull rope prior to pulling the MV cable. If there is sufficient time to pull the cable tomorrow (12-21-17) then the cable will be installed. If Wilson Electric determines that a full day will be needed to pull the cable then the installation will be pushed back to Tuesday 12-26-17.
- HDD to the GWTS building for the installation of the communication line

Please let me know if you need additional information.

Tyler Curley, P.E.
EA Engineering, Science, and Technology, Inc., PBC
320 Gold Avenue, SW Suite 1300
Albuquerque, NM 87120
(505) 715-4422 work
(719) 688-9558 cell
tcurley@eaest.com

DAILY FIELD ACTIVITIES SUMMARY REPORT		
PROJECT NAME: KAFB Well 106239 Conveyance Line Installation		
Date: 12-20-17	Time Shift Beginning: 0700	Time Shift Ending: 1530
Project Number: 62599DM01		Contract/Task Order No.:
Client: USACE		Report By: Tyler Curley
Contractor(s): RMCI		Project Manager: Devon Jercinovic
Design Manager:		Oversight Manager: Tyler Curley
Design Engineer: George Nemeth		Site Engineer: Tyler Curley
Weather: Sunny 55° F		Logbook Number: NA
Personnel Onsite:	**Name:**	**Reason for Being Onsite:**
EA	Tyler Curley Pete Ferrari Kevin McKeage	Construction/Safety Oversight Construction/Safety Oversight CQM
Wilson Electric	Britt Crooks Jaime Perez Eric Kucevic Rogan Skeets	Electrical Contractor
Rupert Plumbing	Mike Clifcorn Mike Rupert Elias Gallegos	Well Vault Component Installation

Work Performed:

Planned Activities:

- Well vault component installation
- MV cable installation

Completed Activities:

- Installed inline components within the well vault
- Began installing the MV cable

Material Deliveries:

- MV cable
- Piping components

Construction Quality Control Activities or Samples Collected:

- Material inspection

Observations or Possible Variations from Specifications:

- None

Anticipated Activities for the Following Day:

- MV cable installation
    - Wilson Electric will install the pull rope prior to pulling the MV cable. If there is sufficient time to pull the cable tomorrow (12-21-17) then the cable will be installed. If Wilson Electric determines that a full day will be needed to pull the cable then the installation will be pushed back to Tuesday 12-26-17.

• HDD to the GWTS building for the installation of the communication line **Planned Material Deliveries:** • None	
Contractor Reports, Manifests, Documents Reviewed and Logged:	
• None	
Report Completed By:	
Tyler Curley	Date: 20 December 2017

DAILY REPORT

(ATTACH ADDITIONAL SHEETS IF NECESSARY)

CONTRACT NAME:	Kirtland AFB Bulk Fuels Facility Expansion of Dissolved Plume GWTS Design	REPORT NO:	030
CONTRACT NUMBER:	W912DR-12-D-0006	REPORT DATE:	20 DEC 17
REVISION NUMBER:	-	REVISION DATE:	-
TASK ORDER NUMBER:	DM01	PROJECT NAME / LOCATION:	Kirtland BFF
PROJECT NUMBER:	62599DM01	PROJECT DESCRIPTION:	Installation of KAFB-106239 Conveyance Line
PROJECT MANAGER:	Devon Jercinovic	FIELD QUALITY MANAGER:	Kevin McKeage
CONSTRUCTION MANAGER:	Tyler Curley	SITE SAFETY MANAGER:	Peter Ferrari

AM WEATHER:	Cool clear	PM WEATHER:	Warm clear	MAX TEMP (F):	54		

SUMMARY OF WORK PERFORMED TODAY

COM Materials, Pulling, and Installation Inspections.

HEALTH AND SAFETY REPORT

SAFETY ACTIONS TAKEN TODAY/SAFETY INSPECTIONS CONDUCTED (Include Observations, Safety Violations, Corrective Instructions Given, Corrective Actions Taken, and Results of Safety Inspections Conducted:

See CM's Daily Report

TAILGATE TOPICS:

"

SAFE BEHAVIOR OBSERVATIONS/SELF-ASSESSMENTS:

"

OPERATIONS/PRODUCTION REPORT

WORK FORCE – CONTRACTOR AND SUBCONTRACTOR

Company	Cumulative Total of Work Hours From Previous Report	Total Hours Today	Total Work Hours From Start of Injection Event
See CM's Daily Report			

EQUIPMENT ON HAND

Description of Equipment	Make/Model/ Manufacturer	Equipment ID Number	Inspection Performed By
Fork lift	JCB, T4	10209666	Britt Crooks
Puller	Greenlee, 6810	10414	Britt Crooks
Tugger	Greenlee, 5073997718	14209	Britt Crooks
Welder	Miller Pipe Pro 304	—	Mike Rupert

COMMENTS (acceptance status, inspection findings, etc.):

OK

WORK AND/OR TESTS ACCOMPLISHED OR IN PROGRESS

Performed Work/Test for Today: See CM's Daily Report

Planned Work/Test for Tomorrow: "

Planned Work/Test for Next Week: "

CHANGED CONDITIONS/DELAY/CONFLICTS ENCOUNTERED (List any conflicts with the project [i.e., scope of work and/or drawings], delays to the project attributable to site and weather conditions, etc. "

VISITORS AND DISCUSSIONS: "

QUALITY CONTROL REPORT

MATERIALS DELIVERED TO JOB SITE

Quantity/Volume/ Weight	Description of Materials Received	Make/Model/ Manufacturer	Material Lot Number	Inspection Performed By
1	PLC and 3R Cabinet	Rockwell Automation	—	KM
2500 ft	Three Phase Conductors + Ground	OKonite, AWG	62896	KM
Various	Check, Actuated, Butterfly Valves	Various	—	KM
Various	Flowmeter, nuts, bolts, stands	Various	-	KM

COMMENTS (acceptance status, inspection findings, etc.): Accepted, see photo log for more information.

INSPECTIONS PERFORMED

Task/Activity Inspected	Inspection Performed	Findings
Component install	Visual	OK
Pulling	Visual	OK

TESTS PERFORMED

Task/Activity Tested	Test Performed	Test Results (Pass/Fail) - Criteria
None		

QUALITY ISSUES AND RESOLUTIONS: None

SUBMITTALS INSPECTION / REVIEW

Submittal No.	Submittal Description	Specification/Plan Reference	Submittal Approved?		Comment/Reason/Action
NA	Daily Report	–	Yes ☐	No ☐	Pending
NA	SBO	–	Yes ☐	No ☐	Pending
NA	PTSP	–	Yes ☐	No ☐	Pending

REGULATORY COMPLIANCE REPORT							
PERMIT INSPECTIONS PERFORMED: None							
WASTE ACCUMULATION/STOCKPILE AREA INSPECTION							
Inspection Performed By:	NA			Signature of Inspector:			
Accumulation / Stockpile Area Inspected:							
No of Bins:		No of Tankers		No of Roll-Off Boxes:		No. of Tanks	
Inspection Results: NA							
GENERAL COMMENTS							
General Comments: (rework, directives, etc.): All items accepted.							
ATTACHMENTS							
List of Attachments: (examples, as applicable: submittals, meeting minutes, safety meeting minutes, COCs, weight tickets, manifests, profiles, rework item list, RFIs, DCNs, photographs, etc.): Photo log							
NOTE: Write all entries legibly in ink. Line out all unused portions or designate as "not applicable". Preparer signs first and last name on each completed daily report. This form may be filled out electronically and signed electronically.				PREPARER'S SIGNATURE		20DEC17 DATE	

Location: GWTS
Description: PLC and 3R Cabinet
Date: 20 December 2017 Direction: West

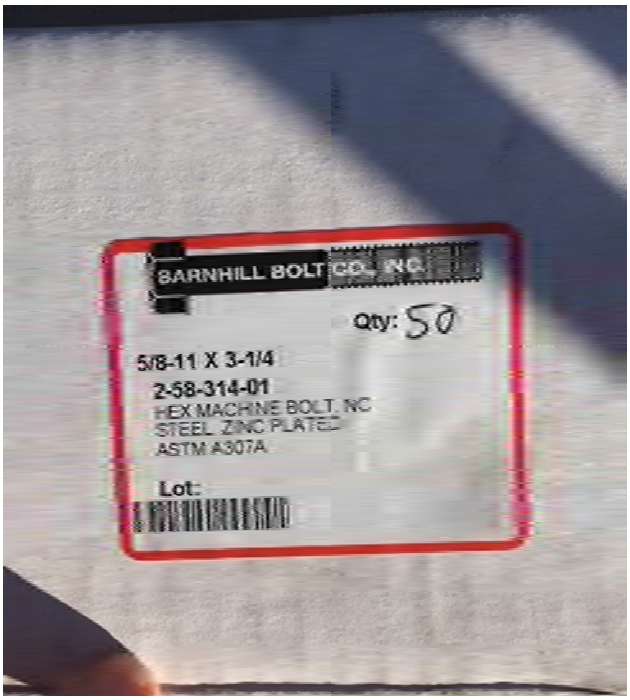

Location: Station 1+00
Description: Flange Bolts
Date: 20 December 2017 Direction: Down

Location: Station 1+00
Description: Flange Gaskets and Pipe Stand
Date: 20 December 2017 Direction: Down

Location: Station 1+00
Description: Butterfly Valve
Date: 20 December 2017 Direction: West

Location: Station 1+00
Description: Electronic Actuator
Date: 20 December 2017 Direction: Down

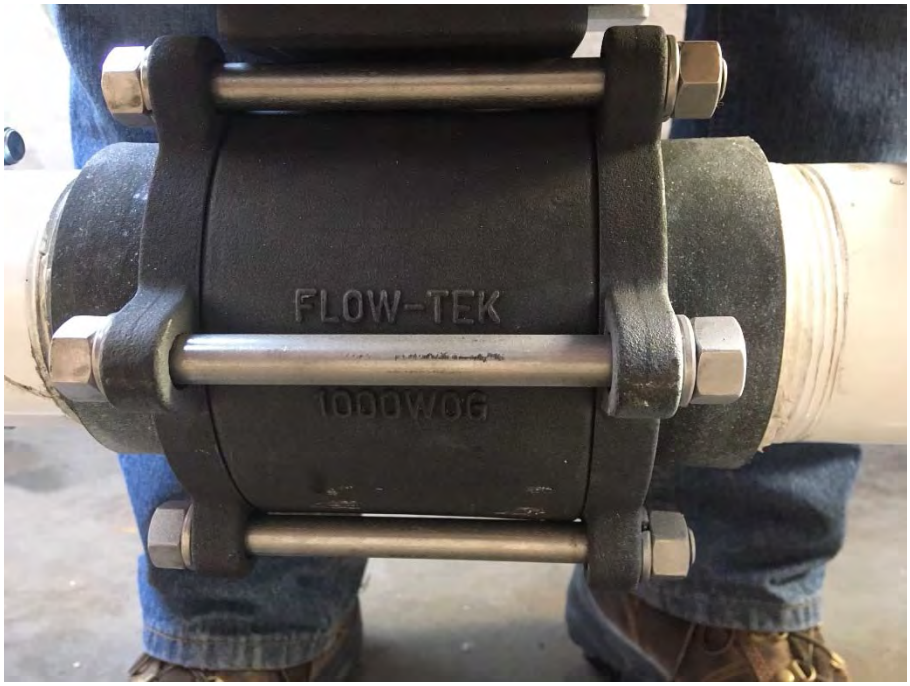

Location: Station 1+00
Description: Actuated Valve
Date: 20 December 2017 Direction: South

Location: Station 1+00
Description: Magnetic Flowmeter
Date: 20 December 2017 Direction: North

Location: Station 1+00
Description: Globe Check Valve
Date: 20 December 2017 Direction: Down

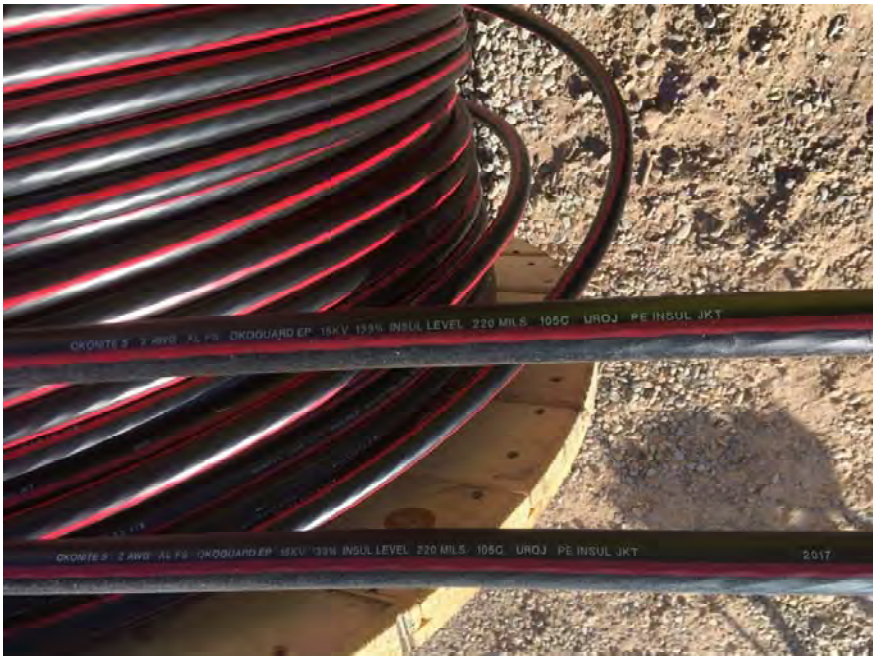

Location: Station 26+50
Description: Three Phase Conductors AWG #2
Date: 20 December 2017 Direction: Down

Location: Station 26+50
Description: Ground Conductor AWG #6
Date: 20 December 2017 Direction: Down

Location: Station 26+50
Description: Pull Set-up of Three Phase Conductors
Date: 20 December 2017 Direction: West

EA Engineering, Science, and Technology, Inc

Employee/Visitor Register and Safety Brief				
Date: 12-20-17				
Site Entry/Exit		Name (Printed)	Signature	Company
Time In	Time Out			
700	1530	Tyler Curley		EA
700	1010	Mike Clifcorn		Rupert P&H
700	1010	Mike Rupt	Mike	Rupert
7:00	1010	Elmo Gallegos		Rupert P&H

EA Engineering, Science, and Technology, Inc

Employee/Visitor Register and Safety Brief				
Date:		12/20/2017		
Site Entry/Exit		Name (Printed)	Signature	Company
Time In	Time Out			
0800	1430	Pete Ferrari	Pete Ferrari	EA
0800	1530	Britt Crooks	BC	WILSON
0800	↓	Eric Kucevic		Wilson
0800	↓	Rogan Skeets		Wilson Electric
0800	↓	Jaime Trevino Perez		wilson
0830	0900	Kevin McKaye		EA

EA Engineering, Science, and Technology, Inc.

DAILY SAFETY INSPECTION CHECKLIST (TO BE COMPLETED EACH DAY OF CONSTRUCTION OR HTRW SITE ACTIVITIES)

Site: KAFB Well 166239
Location: Ridgecrest Dr.
Project No.: 62299 DM01
Client: USACE

Prepared by SSHO: Tyler Curley
Project Manager: Devon Jercinovic
Date: 12-28-17

Rating	Y	N	N/A	Comments/Immediate Corrective Action[1]
Accident Prevention Plan (APP) and Site Safety and Health Plan (SSHP) General Requirements				
Are there new onsite personnel? • Did they receive pre-entry briefing and are their names recorded in field logbook or daily log? • Was the USACE PM made aware of the new personnel. • Required training and medical surveillance documentation received (e.g., 40-hr, 8 hr, etc.)?	✓			
Did personnel sign in/out of site?	✓			
Daily tailgate safety meetings conducted and documented?	✓			
Were new activities performed today? Were hazards identified, discussed during the daily safety tailgate, and incorporated into revised APP/SSHP?	✓			
New materials brought on site? MSDSs available?	✓			
Exclusion (EZ), Contamination Reduction (CRZ), and Support Zones (SZ) delineated and enforced?	✓			
General housekeeping measures in place to prevent hazards?	✓			
Emergency Planning				
Were there any changes to emergency contact names, telephone numbers, or hospital? If so, were site personnel made aware and was information distributed/reposted.		✓		
Adequate safety equipment inventory available?	✓			
Fire extinguisher available (monthly inspection of extinguisher will suffice)	✓			
Eyewash station(s) functioning and in place (weekly inspection of eye wash station will suffice)?	✓			
First aid supplies available (weekly inspection of first aid kit will suffice)?	✓			
Communication equipment readily available for emergencies?	✓			
Any reported accidents/incidents at this site? If so, were accident reporting procedures followed?		✓		
Air Monitoring				
Monitoring equipment specified in SSHP available and in working order? Air monitoring instrumentation for this site includes – check each if required/on site, note deficiencies in comments: • Combustible gas meter • Organic vapor analyzer • Contaminant specific analyzer for benzene (if total organic vapor concentrations exceed 0.5 ppm)	✓			
Monitoring equipment calibrated and calibration records	✓			

Y = Satisfactory or Yes; N = Unsatisfactory or No, N/A = Not applicable

Rating	Y	N	N/A	Comments/Immediate Corrective Action[1]
available?				
Environmental and personnel monitoring performed as specified in SSHP?	✓			
PPE				
Proper dermal protection worn by EA and subcontracted employees when handling/ contacting hazardous chemicals or contaminated environmental media?	✓			
Required PPE (hard hats, safety boots / shoes, eye protection with side shields, hearing protection) being worn by EA and subcontracted employees?	✓			
PPE inspection completed by SSHO?	✓			
Drill Rig Operations				
Daily rig inspection completed? Any equipment problems?	✓			
Drill rigs/elevated equipment maintaining minimum 10-ft distance from energized (50 kV) overhead power lines?	✓			
Investigation-derived Waste (IDW)				
Wastes properly staged, secured, and labeled at end of day?			✓	

Additional Comments:

Site Safety and Health Officer's Signature

12-20-17
Date

[1]If a deficiency is noted that cannot be immediately corrected, the SSHO will monitor the progress in correcting the deficiency and will document following:

- Date the deficiency was identified
- Description of the deficiency
- Name of the person responsible for correcting the deficiency
- Projected date of correction
- Actual date of correction.

EA Engineering, Science, and Technology, Inc.

DAILY SAFETY INSPECTION CHECKLIST (TO BE COMPLETED EACH DAY OF CONSTRUCTION OR HTRW SITE ACTIVITIES)

Site: Kirtland AFB Bulk Fuels GWTS Expansion
Location: Kirtland AFB, NM
Project No.: 62599DM01
Client: USACE Albuquerque District

Prepared by SSHO: Pete Farrar
Project Manager: Devon Jercinovic
Date: 12-20-17

Rating	Y	N	N/A	Comments/Immediate Corrective Action[1]
Accident Prevention Plan (APP) and Site Safety and Health Plan (SSHP) General Requirements				
Are there new onsite personnel? • Did they receive pre-entry briefing and are their names recorded in field logbook or daily log? • Was the USACE PM made aware of the new personnel. • Required training and medical surveillance documentation received (e.g., 40-hr, 8 hr, etc.)?	✓			
Did personnel sign in/out of site?	✓			
Daily tailgate safety meetings conducted and documented?	✓			
Were new activities performed today? Were hazards identified, discussed during the daily safety tailgate, and incorporated into revised APP/SSHP?	✓			Pulling cable for pump (transformer at pad)
New materials brought on site? MSDSs available?	✓			cable
Exclusion (EZ), Contamination Reduction (CRZ), and Support Zones (SZ) delineated and enforced?			✓	
General housekeeping measures in place to prevent hazards?	✓			
Emergency Planning				
Were there any changes to emergency contact names, telephone numbers, or hospital? If so, were site personnel made aware and was information distributed/reposted.		✓		
Adequate safety equipment inventory available?	✓			
Fire extinguisher available (monthly inspection of extinguisher will suffice)	✓			
Eyewash station(s) functioning and in place (weekly inspection of eye wash station will suffice)?	✓			
First aid supplies available (weekly inspection of first aid kit will suffice)?	✓			
Communication equipment readily available for emergencies?	✓		✓	
Any reported accidents/incidents at this site? If so, were accident reporting procedures followed?		✓		
Air Monitoring				
Monitoring equipment specified in SSHP available and in working order? Air monitoring instrumentation for this site includes – check each if required/on site, note deficiencies in comments: • Combustible gas meter • Organic vapor analyzer • Contaminant specific analyzer for benzene (if total organic vapor concentrations exceed 0.5 ppm)			✓	
Monitoring equipment calibrated and calibration records			✓	

Y = Satisfactory or Yes; N = Unsatisfactory or No; N/A = Not applicable

Rating	Y	N	N/A	Comments/Immediate Corrective Action[1]
available?			✓	
Environmental and personnel monitoring performed as specified in SSHP?			✓	
PPE				
Proper dermal protection worn by EA and subcontracted employees when handling/ contacting hazardous chemicals or contaminated environmental media?	✓			
Required PPE (hard hats, safety boots / shoes, eye protection with side shields, hearing protection) being worn by EA and subcontracted employees?	✓			
PPE inspection completed by SSHO?	✓			
Drill Rig Operations				
Daily rig inspection completed? Any equipment problems?			✓	
Drill rigs/elevated equipment maintaining minimum 10-ft distance from energized (50 kV) overhead power lines?			✓	
Investigation-derived Waste (IDW)				
Wastes properly staged, secured, and labeled at end of day?			✓	

Additional Comments:

Site Safety and Health Officer's Signature

12-20-17
Date

[1]If a deficiency is noted that cannot be immediately corrected, the SSHO will monitor the progress in correcting the deficiency and will document following:

- Date the deficiency was identified
- Description of the deficiency
- Name of the person responsible for correcting the deficiency
- Projected date of correction
- Actual date of correction.

EA ENGINEERING, SCIENCE AND TECHNOLOGY, INC.
SAFETY MEETING REPORT

Date: 12-20-17	**Time:** 0700	**Duration of meeting:** 10 min	**Project #** 62599.0101
Location: KAFB-Well 106739		**Task:** Conveyance Line Install	

Type of meeting: _X_ Daily ____ Weekly ____ Monthly ____ Other:_____

Items/Issues discussed:

1. Traffic issues
2. Welder Safety
3. Hospital Route
4.
5.

Attach minutes of safety meeting if taken.

Safety questions/issues raised:	Actions/Follow-up needed:
1. None	
2.	
3.	
4.	
5.	
6.	

Remarks: None

Meeting conducted by:

Tyler Curley

EA ENGINEERING, SCIENCE AND TECHNOLOGY, INC.
SAFETY MEETING REPORT

Date: 12-20-2017	Time: 0800	Duration of meeting: 10 min	Project # 62599DM01
Location: Kirtland AFB, NM		Task: Pull electrical cable from on base to other side at Kentucky St	

Type of meeting: X Daily ___ Weekly ___ Monthly ___ Other: _____

Items/Issues discussed:

1. ~~See attached~~ Pinch points - covers and cable through pipe
2. Struck by s - forces created by pulling
3. House Keeping - slip trip falls
4. Base emergency ##
5. Hospital Route

Attach minutes of safety meeting if taken.

Safety questions/issues raised:	Actions/Follow-up needed:
1. Place covers on vault perpendicular	to traffic support
2. Use pallets temporarily/ints minimize on/off of heavy	
3. covers	
4. PPE / Wilson is required to have	the prop
5. PPE	
6.	

Remarks:

Meeting conducted by: Pete Ferrari / Brit Crooks

Kirtland AFB Bulk Fuels Facility GWTS Expansion/Monitoring -- 62599DM01
Daily Quality Control Report – Non-Construction

ROLE: SSHO DATE: 12/26/17

WEATHER:

1. ONSITE PERSONNEL (including subcontractors and government employees)	
Name	Organization
Tyler Curley	EA - Site Manager/Supervisor
Pete Fortune	EA - Site Health and Safetly Office
Britt Crooke	Wilson Electric
Eric Leucevic	Wilson "
Roger Skeets	Wilson "
Jaime Trivia Perez	Wilson "

2. OPERATING EQUIPMENT					
Team #1		Team #2		Spare	
YSI Professional Plus 15K101398 Wh0003	☐	YSI Professional Plus 15K101396 Wh0001	☐	YSI Professional Plus 15L100541 Wh0002	☐
MiniRAE 3000 59[illegible]015778 Wh0005	☐	MiniRAE 3000 592-915790 Wh0004	☐	MiniRAE 3000 592-915579 Wh0006	☐
Hach 2100Q 151[illegible]045034 Wh0008	☐	Hach 2100Q 15100C044633 Wh0009	☐	Hach 2100Q 15100C045025 Wh0007	☐
Solinst Water Level Meter 253054	☐	Solinst Water Level Meter 253053	☐	Solinst Water Level Meter 253056	☐

3. DAILY SUMMARY (include QC samples collected, deviations from planning documents, converstations with the the public and governmental employees, and problems encountered and remedies applied)	

4. WORK PERFORMED (Indicate location, time, and description of work performed by prime and/or subcontractors)	
0800	Health and Safety briefing.
	K.S. continues to pull fiber rope through
	pipe run.
0830	Jaime is on-site - sign in and brief
841	Spools are placed in jack in preparation

Reviewed by: _____ Initials: _____ Reviewed date: _____

Kirtland AFB Bulk Fuels Facility GWTS Expansion/Monitoring -- 62599DM01
Daily Quality Control Report – Non-Construction

DATE: 12-20-17

4. WORK PERFORMED (Continued)

	of pulling
0915	K.M. Arrives, QC of cable
0955	K.M. is off site
09:59	Begin pulling toward Kentucky St. Pulling by hand is too difficult. Will drive the tugger to Kentucky St.
1030	Drive the tugger to Kent. St.
1045	~~1045~~ Tugger arrives on other side of base
1052	1052 Begin tugging from Kentucky
1145	Eric is off-site, Britt C. heads off-base to Kentucky St. pull box
1208	Lunch
1237	Return to work / Pulled 489' of 2 AWG wire / three cables and a 6 AWG ground wire from on base to Kentucky St. before lunch. Will pull an extra 10' now and spool enough wire to cross Ridge crest on base towards the gwts.

5. CONTRACTOR'S VERIFICATION: I certify that to the best of my knowledge the above report is complete and correct. All equipment used, and work performed during this reporting period is in compliance with the contract plans and specifications noted above.

Name

Signature

EA Engineering, Science and Technology Inc., PBC

Initials: _____

Reviewed date: _____

HEALTH AND SAFETY ACTIVITY REPORT

Site: KAFB Well 106239 Location: Ridgecrest Dr.

Weather Cond.: Sunny 55°F Onsite Hours: From 0700 To 1530

Changes in PPE Levels[1]	Work Operations	Reasons for Change
None		

Site Safety and Health Plan Violations	Corrective Action Specified	Corrective Action Taken [2](yes/no)
None		

Observations and Comments:

None

Completed by: Tyler Curley Date: 12-20-17

Site Health and Safety Supervisor

[1]Only SSHO may change PPE levels, using only criteria specified in APP/SSHP.

[2]If a deficiency is noted that cannot be immediately corrected, the SSHO will monitor the progress in correcting the deficiency and will document following:

- Date the deficiency was identified
- Description of the deficiency
- Name of the person responsible for correcting the deficiency
- Projected date of correction
- Actual date of correction.

From:	Curley, Tyler
To:	"Trent.Simpler@usace.army.mil"; "Amy.E.Sanchez@usace.army.mil"; "Carlos.F.Salazar@usace.army.mil"; "Linda.Dreeland@usace.army.mil"; "Mark.J.Phaneuf@usace.army.mil"
Cc:	Jercinovic, Devon; Morse, Earl; McKeage, Kevin; Bowman, Matthew
Subject:	Activity Report for KAFB Well 106239 Conveyance Line Installation 21 December 2017
Date:	Thursday, December 21, 2017 4:55:09 PM
Attachments:	Daily Field Activities Summary Report.pdf Photos 12-21-17.pdf 031 CQM Daily Report 21DEC17.pdf

---

Issues Today 21Thursday December 2017:

- While installing the pull rope an incident occurred resulting in minor facial cuts and scrapes
- During HDD activities, the ground cable for the lightning protection system broken

Resolution of Issues:

- First aid was administered in the field and work resumed, no other medical attention was required. The ENG Form 3394 was submitted to USACE
- Wilson Electric will repair the ground cable

Work Performed Today:

- Installed pull rope into the electrical conduit
- Completed HDD to the GWTS building for the installation of the communication line

Installation Completion to Date: 81%

Work Planned for 22 December 2017:

- MV cable installation
    - Wilson Electric will install the pull rope prior to pulling the MV cable. If there is sufficient time to pull the cable tomorrow (12-22-17) then the cable will be installed. If Wilson Electric determines that a full day will be needed to pull the cable then the installation will be pushed back to Tuesday 12-26-17.

Please let me know if you need additional information.

Tyler Curley, P.E.
EA Engineering, Science, and Technology, Inc., PBC
320 Gold Avenue, SW Suite 1300
Albuquerque, NM 87120
(505) 715-4422 work
(719) 688-9558 cell
tcurley@eaest.com

DAILY FIELD ACTIVITIES SUMMARY REPORT		
PROJECT NAME: KAFB Well 106239 Conveyance Line Installation		
Date: 12-21-17	Time Shift Beginning: 0700	Time Shift Ending: 1530
Project Number: 62599DM01		Contract/Task Order No.:
Client: USACE		Report By: Tyler Curley
Contractor(s): RMCI		Project Manager: Devon Jercinovic
Design Manager:		Oversight Manager: Tyler Curley
Design Engineer: George Nemeth		Site Engineer: Tyler Curley
Weather: Sunny 50° F		Logbook Number: NA
Personnel Onsite:	**Name:**	**Reason for Being Onsite:**
EA	Tyler Curley Pete Ferrari	Construction/Safety Oversight Construction/Safety Oversight
Wilson Electric	Britt Crooks Jaime Perez Eric Kucevic Rogan Skeets	Electrical Contractor
Kelly Cable	David Sanchez Quincy Brown Sean Lewis John Hitchcock Alonzo Cable	HDD (Wilson Sub)

Work Performed:

Planned Activities:

- MV cable installation
- HDD to the GWTS building for the installation of the communication line

Completed Activities:

- Installed pull rope into the electrical conduit
- Completed HDD to the GWTS building for the installation of the communication line

Material Deliveries:

- HDPE conduit

Construction Quality Control Activities or Samples Collected:

- Material inspection

Observations or Possible Variations from Specifications:

- While installing the pull rope an incident occurred resulting in minor facial cuts and scrapes. First aid was administered in the field and work resumed.
- During HDD activities, the ground cable for the lightning protection system broken. Wilson electric will repair the ground cable.

Anticipated Activities for the Following Day:

- MV cable installation
  - Wilson Electric will install the pull rope prior to pulling the MV cable. If there is sufficient

time to pull the cable tomorrow (12-22-17) then the cable will be installed. If Wilson Electric determines that more than a full day will be needed to pull the cable then the installation will be pushed back to Tuesday 12-26-17.	
Planned Material Deliveries: • None	
Contractor Reports, Manifests, Documents Reviewed and Logged:	
• None	
Report Completed By:	
Tyler Curley	Date: 21 December 2017

DAILY REPORT

(ATTACH ADDITIONAL SHEETS IF NECESSARY)

CONTRACT NAME:	Kirtland AFB Bulk Fuels Facility Expansion of Dissolved Plume GWTS Design	REPORT NO:	031
CONTRACT NUMBER:	W912DR-12-D-0006	REPORT DATE:	21 DEC 17
REVISION NUMBER:	-	REVISION DATE:	-
TASK ORDER NUMBER:	DM01	PROJECT NAME / LOCATION:	Kirtland BFF
PROJECT NUMBER:	62599DM01	PROJECT DESCRIPTION:	Installation of KAFB-106239 Conveyance Line
PROJECT MANAGER:	Devon Jercinovic	FIELD QUALITY MANAGER:	Kevin McKeage
CONSTRUCTION MANAGER:	Tyler Curley	SITE SAFETY MANAGER:	Peter Ferrari

AM WEATHER:	Clear Cool	PM WEATHER:	Clear Warm	MAX TEMP (F):	57		

SUMMARY OF WORK PERFORMED TODAY

CQM Inspection of HDPE Conduit for HDD.

HEALTH AND SAFETY REPORT

SAFETY ACTIONS TAKEN TODAY/SAFETY INSPECTIONS CONDUCTED (Include Observations, Safety Violations, Corrective Instructions Given, Corrective Actions Taken, and Results of Safety Inspections Conducted:

See CM's Daily Report

TAILGATE TOPICS:

11

SAFE BEHAVIOR OBSERVATIONS/SELF-ASSESSMENTS:

11

OPERATIONS/PRODUCTION REPORT

WORK FORCE – CONTRACTOR AND SUBCONTRACTOR

Company	Cumulative Total of Work Hours From Previous Report	Total Hours Today	Total Work Hours From Start of Injection Event
See CM's Daily Report.			

EQUIPMENT ON HAND

Description of Equipment	Make/Model/ Manufacturer	Equipment ID Number	Inspection Performed By
Forklift	JCB, T4	10209660	Britt Crooks
Tugger	GreenLee 6810	10414	Britt Crooks
Feeder	GreenLee S03599715	14209	Britt Crooks
Horizontal Drill Rig	Vermeer D24x40 Navigator	TL0050	Quincy Brown
Trackhoe	Komatsu PC 35MR	EL0028	Quincy Brown

COMMENTS (acceptance status, inspection findings, etc.):

OK

WORK AND/OR TESTS ACCOMPLISHED OR IN PROGRESS

Performed Work/Test for Today: See CM's Daily Report.

Planned Work/Test for Tomorrow: "

Planned Work/Test for Next Week: "

CHANGED CONDITIONS/DELAY/CONFLICTS ENCOUNTERED (List any conflicts with the project [i.e., scope of work and/or drawings], delays to the project attributable to site and weather conditions, etc. "

VISITORS AND DISCUSSIONS: "

QUALITY CONTROL REPORT

MATERIALS DELIVERED TO JOB SITE

Quantity/Volume/ Weight	Description of Materials Received	Make/Model/ Manufacturer	Material Lot Number	Inspection Performed By
100 ft	2 inch HDPE Conduit	Dura Line.	–	TC

COMMENTS (acceptance status, inspection findings, etc.): Meets Specifications.

INSPECTIONS PERFORMED

Task/Activity Inspected	Inspection Performed	Findings
None		

TESTS PERFORMED

Task/Activity Tested	Test Performed	Test Results (Pass/Fail) - Criteria
None		

QUALITY ISSUES AND RESOLUTIONS: None

SUBMITTALS INSPECTION / REVIEW

Submittal No.	Submittal Description	Specification/Plan Reference	Submittal Approved?		Comment/Reason/Action
NA	Daily Report	–	Yes ☐	No ☐	Pending
NA	SBO	–	Yes ☐	No ☐	Pending
NA	PTSP	–	Yes ☐	No ☐	Pending

REGULATORY COMPLIANCE REPORT							
PERMIT INSPECTIONS PERFORMED: None							
WASTE ACCUMULATION/STOCKPILE AREA INSPECTION							
Inspection Performed By:	NA			Signature of Inspector:			
Accumulation / Stockpile Area Inspected:							
No of Bins:		No of Tankers		No of Roll-Off Boxes:		No. of Tanks	
Inspection Results: NA							
GENERAL COMMENTS							
General Comments: (rework, directives, etc.): OK							
ATTACHMENTS							
List of Attachments: (examples, as applicable: submittals, meeting minutes, safety meeting minutes, COCs, weight tickets, manifests, profiles, rework item list, RFIs, DCNs, photographs, etc.): Photo log.							
NOTE: Write all entries legibly in ink. Line out all unused portions or designate as "not applicable". Preparer signs first and last name on each completed daily report. This form may be filled out electronically and signed electronically.				PREPARER'S SIGNATURE		21 DEC 17 DATE	

Location: West of GWTS
Description: 2-Inch Schedule 40 HDPE Conduit
Date: 21 December 2017 Direction: Down

EA Engineering, Science, and Technology, Inc

Employee/Visitor Register and Safety Brief				
Date: 12-21-17				
Site Entry/Exit		Name (Printed)	Signature	Company
Time In	Time Out			
0700	1630	Tyler Curley		
700	1530	Britt Crooks	BC	WILSON
700	1530	Rogan Shutts	RS	Wilson Electric
700	1530	Jaime Travis Ruiz		Wilson Electric
700	1710	Pete Ferrari		EA
0700	1530	Eric Kucevic		WE
1030	1707	David Sanchez		Kelly Cable
10:35	1707	Danny Brown		Kelly Cable
10:37	1707	Sean Lewis	Sean Lewis	Kellycable
10:30	1707	John Hitchcock		Kelly
11:48	1707	Alonzo Cable		Kelly

EA ENGINEERING, SCIENCE AND TECHNOLOGY, INC.
SAFETY MEETING REPORT

Date: 12-21-17	**Time:** 0700	**Duration of meeting:** 10 min	**Project #** 62599DM61
Location: KAFB Well 106739		**Task:** Conveyance Line Installation	

Type of meeting: _X_ **Daily** ____ **Weekly** ____ **Monthly** ____ **Other:**_____

Items/Issues discussed:

1. Slips, trips, falls
2. Crushing hazards
3. traffic hazards
4.
5.

Attach minutes of safety meeting if taken.

Safety questions/issues raised:	**Actions/Follow-up needed:**
1. None	
2.	
3.	
4.	
5.	
6.	

Remarks: None

Meeting conducted by:

Tyler Carley

EA Engineering, Science, and Technology, Inc.

DAILY SAFETY INSPECTION CHECKLIST
(TO BE COMPLETED EACH DAY OF CONSTRUCTION OR HTRW SITE ACTIVITIES)

Site: KAFB Well 106739
Location: Ridgecrest Dr
Project No.: 62599.001
Client: USACE

Prepared by SSHO: Tyler Conroy
Project Manager: Devon Jerkinovic
Date: 10-24-17

Rating	Y	N	N/A	Comments/Immediate Corrective Action[1]
Accident Prevention Plan (APP) and Site Safety and Health Plan (SSHP) General Requirements				
Are there new onsite personnel? • Did they receive pre-entry briefing and are their names recorded in field logbook or daily log? • Was the USACE PM made aware of the new personnel. • Required training and medical surveillance documentation received (e.g., 40-hr, 8 hr, etc.)?	✓			
Did personnel sign in/out of site?	✓			
Daily tailgate safety meetings conducted and documented?	✓			
Were new activities performed today? Were hazards identified, discussed during the daily safety tailgate, and incorporated into revised APP/SSHP?		✓		
New materials brought on site? MSDSs available?		✓		
Exclusion (EZ), Contamination Reduction (CRZ), and Support Zones (SZ) delineated and enforced?	✓			
General housekeeping measures in place to prevent hazards?	✓			
Emergency Planning				
Were there any changes to emergency contact names, telephone numbers, or hospital? If so, were site personnel made aware and was information distributed/reposted.		✓		
Adequate safety equipment inventory available?	✓			
Fire extinguisher available (monthly inspection of extinguisher will suffice)	✓			
Eyewash station(s) functioning and in place (weekly inspection of eye wash station will suffice)?	✓			
First aid supplies available (weekly inspection of first aid kit will suffice)?	✓			
Communication equipment readily available for emergencies?	✓			
Any reported accidents/incidents at this site? If so, were accident reporting procedures followed?	✓			
Air Monitoring				
Monitoring equipment specified in SSHP available and in working order? Air monitoring instrumentation for this site includes – check each if required/on site, note deficiencies in comments: • Combustible gas meter • Organic vapor analyzer • Contaminant specific analyzer for benzene (if total organic vapor concentrations exceed 0.5 ppm)	✓			
Monitoring equipment calibrated and calibration records	✓			

Y = Satisfactory or Yes; N = Unsatisfactory or No, N/A = Not applicable

Rating	Y	N	N/A	Comments/Immediate Corrective Action[1]
available?				
Environmental and personnel monitoring performed as specified in SSHP?	✓			
PPE				
Proper dermal protection worn by EA and subcontracted employees when handling/ contacting hazardous chemicals or contaminated environmental media?	✓			
Required PPE (hard hats, safety boots / shoes, eye protection with side shields, hearing protection) being worn by EA and subcontracted employees?	✓			
PPE inspection completed by SSHO?	✓			
Drill Rig Operations				
Daily rig inspection completed? Any equipment problems?	✓			
Drill rigs/elevated equipment maintaining minimum 10-ft distance from energized (50 kV) overhead power lines?	✓			
Investigation-derived Waste (IDW)				
Wastes properly staged, secured, and labeled at end of day?			✓	

Additional Comments:

Site Safety and Health Officer's Signature

12-21-17

Date

[1]If a deficiency is noted that cannot be immediately corrected, the SSHO will monitor the progress in correcting the deficiency and will document following:

- Date the deficiency was identified
- Description of the deficiency
- Name of the person responsible for correcting the deficiency
- Projected date of correction
- Actual date of correction.

HEALTH AND SAFETY ACTIVITY REPORT

Site: KAFB Well 106939 Location: Ridgecrest Dr

Weather Cond.: Sunny 50° Onsite Hours: From 700 To _____

Changes in PPE Levels[1]	Work Operations	Reasons for Change
None		

Site Safety and Health Plan Violations	Corrective Action Specified	Corrective Action Taken [2](yes/no)
None		

Observations and Comments:
Accident occured while installing pull rope, see accident report.

Completed by: Tyler Curley Date: 12-21-17
Site Health and Safety Supervisor

[1]Only SSHO may change PPE levels, using only criteria specified in APP/SSHP.
[2]If a deficiency is noted that cannot be immediately corrected, the SSHO will monitor the progress in correcting the deficiency and will document following:

- Date the deficiency was identified
- Description of the deficiency
- Name of the person responsible for correcting the deficiency
- Projected date of correction
- Actual date of correction.

From:	Morse, Earl
To:	Simpler, Trent SPA; Amy Sanchez; Phaneuf, Mark J SPA (Mark.J.Phaneuf@usace.army.mil); Carlos Salazar; Linda Dreeland
Cc:	Jercinovic, Devon; McKeage, Kevin; Curley, Tyler; Ferrari, Peter; Bowman, Matthew; Rief, Lucas
Subject:	Activity Report for KAFB Well 106239 Conveyance Line Installation 25 October 2017
Date:	Friday, December 22, 2017 4:51:52 PM
Attachments:	Daily Field Activities Summary Report 12-22-17.pdf

---

Issues Today 22 Friday December 2017:

- None

Resolution of Issues:

- None

Work Performed Today:

- Pulled electrical conduit bundle (MV cable) between sta 21+00 and sta 12+00
- Pulled electrical conduit bundle (MV cable) beneath Ridgecrest Dr at sta 21+00

Installation Completion to Date: 82%

Work Planned for 26 December 2017:

- Continued MV cable installation

Please let me know if you need additional information.

Earl L. Morse, MS, PG
EA Engineering, Science, and Technology, Inc., PBC
Project Manager/Senior Geologist
320 Gold Ave. SW, Suite 1300
Albuquerque, NM 87102
Cell: 505.238-4410
Office: 505.715.4275
Email: emorse@eaest.com
www.eaest.com

DAILY FIELD ACTIVITIES SUMMARY REPORT		
PROJECT NAME: KAFB Well 106239 Conveyance Line Installation		
Date: 12-22-17	Time Shift Beginning: 0645	Time Shift Ending:1600
Project Number: 62599DM01		Contract/Task Order No.:
Client: USACE		Report By: Earl Morse
Contractor(s): Wilson Electric		Project Manager: Devon Jercinovic
Design Manager:		Oversight Manager: Earl Morse
Design Engineer: George Nemeth		Site Engineer: Kevin McKeage
Weather: Cold/breezy 42° F		Logbook Number: NA
Personnel Onsite:	**Name:**	**Reason for Being Onsite:**
EA	Earl Morse Pete Ferrari Kevin McKeage	Construction and Safety Oversight SSHO CQM
Wilson Electric	Jamie Perez Britt Crooks Eric Kucevic Rogan Skeets	Electrical Contractor

Work Performed:

Planned Activities:

- Install MV cable from sta 21+00 to sta 2+75

Completed Activities:

- Install MV cable from sta 21+00 to sta 12+00
- Install MV cable beneath Ridgecrest Drive at sta 21+00

Material Deliveries:

- None

Construction Quality Control Activities or Samples Collected:

- None. No CQM report today.

Observations or Possible Variations from Specifications:

- Decision was made to do the Ridgecrest MV cable pull in two segments and add an additional splice at the sta 12+00 electrical vault.

Anticipated Activities for the Following Day:

- Continue MV cable installation.

Planned Material Deliveries:

- None

Contractor Reports, Manifests, Documents Reviewed and Logged:

None

Report Completed By:

Earl Morse	Date: 24 October 2017

GREENLEE
6810
ULTRA CABLE FEEDER

EA Engineering, Science, and Technology, Inc

Employee/Visitor Register and Safety Brief

Date: 12-22-2017

Site Entry/Exit		Name (Printed)	Signature	Company
Time In	Time Out			
0720	1600	Earl Morse	Earl Morse	EA
0200	1330	Pete Ferrandi	Pete Ferrandi	EA
700	1600	Regan Sheets	RS	Wilson Electric
700		Britt Crooks	BC	WILSON
0700		Eric Lengyel		WE
700		Jaime Trevino Rios		WE

EA ENGINEERING, SCIENCE AND TECHNOLOGY, INC.
SAFETY MEETING REPORT

Date: 12-22-2017	**Time:** 0700	**Duration of meeting:** 10	**Project #** 62549.0101
Location: 106239 Conveyance Line		**Task:** Pulling Electrical cable	

Type of meeting: X **Daily** ___ **Weekly** ___ **Monthly** ___ **Other:** _____

Items/Issues discussed:

1. Cold / Windy conditions
2. 12-21-17 incident review
3. Work smart / don't Rush
4.
5.

Attach minutes of safety meeting if taken.

Safety questions/issues raised:	Actions/Follow-up needed:
1. None	
2.	
3.	
4.	
5.	
6.	

Remarks: None

Meeting conducted by: Earl Morse

EA Engineering, Science, and Technology, Inc.

DAILY SAFETY INSPECTION CHECKLIST
(TO BE COMPLETED EACH DAY OF CONSTRUCTION OR HTRW SITE ACTIVITIES)

Site: 106239 Conveyance Line
Location: R. Durant SE
Project No.: 62599 DM 01
Client: USACE

Prepared by SSHO: E AnL Morse
Project Manager: Devon Jenkins
Date: 12-22-2017

Rating	Y	N	N/A	Comments/Immediate Corrective Action[1]
Accident Prevention Plan (APP) and Site Safety and Health Plan (SSHP) General Requirements				
Are there new onsite personnel? • Did they receive pre-entry briefing and are their names recorded in field logbook or daily log? • Was the USACE PM made aware of the new personnel. • Required training and medical surveillance documentation received (e.g., 40-hr, 8 hr, etc.)?		✓		
Did personnel sign in/out of site?	✓			
Daily tailgate safety meetings conducted and documented?	✓			
Were new activities performed today? Were hazards identified, discussed during the daily safety tailgate, and incorporated into revised APP/SSHP?		✓		
New materials brought on site? MSDSs available?		✓		
Exclusion (EZ), Contamination Reduction (CRZ), and Support Zones (SZ) delineated and enforced?			✓	
General housekeeping measures in place to prevent hazards?	✓			
Emergency Planning				
Were there any changes to emergency contact names, telephone numbers, or hospital? If so, were site personnel made aware and was information distributed/reposted.		✓		
Adequate safety equipment inventory available?	✓			
Fire extinguisher available (monthly inspection of extinguisher will suffice)	✓			
Eyewash station(s) functioning and in place (weekly inspection of eye wash station will suffice)?	✓			
First aid supplies available (weekly inspection of first aid kit will suffice)?	✓			
Communication equipment readily available for emergencies?				
Any reported accidents/incidents at this site? If so, were accident reporting procedures followed?	✓			
Air Monitoring				
Monitoring equipment specified in SSHP available and in working order? Air monitoring instrumentation for this site includes – check each if required/on site, note deficiencies in comments: • Combustible gas meter • Organic vapor analyzer • Contaminant specific analyzer for benzene (if total organic vapor concentrations exceed 0.5 ppm)			✓	
Monitoring equipment calibrated and calibration records				

Y = Satisfactory or Yes; N = Unsatisfactory or No, N/A = Not applicable

Rating	Y	N	N/A	Comments/Immediate Corrective Action[1]
available?			✓	
Environmental and personnel monitoring performed as specified in SSHP?			✓	
PPE				
Proper dermal protection worn by EA and subcontracted employees when handling/ contacting hazardous chemicals or contaminated environmental media?	✓			
Required PPE (hard hats, safety boots / shoes, eye protection with side shields, hearing protection) being worn by EA and subcontracted employees?	✓			
PPE inspection completed by SSHO?	✓			
Drill Rig Operations				
Daily rig inspection completed? Any equipment problems?			✓	
Drill rigs/elevated equipment maintaining minimum 10-ft distance from energized (50 kV) overhead power lines?			✓	
Investigation-derived Waste (IDW)				
Wastes properly staged, secured, and labeled at end of day?			✓	

Additional Comments:

Site Safety and Health Officer's Signature

12-22-2017

Date

[1]If a deficiency is noted that cannot be immediately corrected, the SSHO will monitor the progress in correcting the deficiency and will document following:

- Date the deficiency was identified
- Description of the deficiency
- Name of the person responsible for correcting the deficiency
- Projected date of correction
- Actual date of correction.

HEALTH AND SAFETY ACTIVITY REPORT

Site: 106239 Conveyance line Location: Ridgecrest ABQ, NM

Weather Cond.: Cold/Breezy Onsite Hours: From 0700 To _____

Changes in PPE Levels[1]	Work Operations	Reasons for Change
None		

Site Safety and Health Plan Violations	Corrective Action Specified	Corrective Action Taken [2](yes/no)
None		

Observations and Comments:

None

Completed by: _____ Date: 12/22/17
Site Health and Safety Supervisor

[1]Only SSHO may change PPE levels, using only criteria specified in APP/SSHP.
[2]If a deficiency is noted that cannot be immediately corrected, the SSHO will monitor the progress in correcting the deficiency and will document following:

- Date the deficiency was identified
- Description of the deficiency
- Name of the person responsible for correcting the deficiency
- Projected date of correction
- Actual date of correction.

ENVIRONMENTAL MONITORING RECORD

SITE: 106239 Conveyance Line

PROJECT NO.: 625990M01

INSTRUMENT: N/A - No Environmental Monitoring Tasked

Time	Monitoring Location	Reading	Corrective Action Taken[a]

Comments:

(a) Corrective actions taken must be documented whenever readings at or above action levels are reached. Monitoring equipment and action levels are specified in Section 9.33 of the Accident Prevention Plan.

Recorded By: _____ Date: 12-22-17

Site Health & Safety Officer

From:	McKeage, Kevin
To:	Simpler, Trent SPA; Amy Sanchez; Phaneuf, Mark J SPA (Mark.J.Phaneuf@usace.army.mil); Carlos Salazar; Linda Dreeland
Cc:	Jercinovic, Devon; McKeage, Kevin; Curley, Tyler; Ferrari, Peter; Bowman, Matthew; Rief, Lucas
Subject:	Activity Report for KAFB Well 106239 Conveyance Line Installation 26 December 2017
Date:	Tuesday, December 26, 2017 4:44:21 PM
Attachments:	Daily Field Activities Summary Report 12-26-17.pdf

---

Issues Today 26 Tuesday December 2017:

- None

Resolution of Issues:

- None

Work Performed Today:

- Pulled electrical conduit bundle (MV cable) between sta 12+00 and sta 2+75
- GAC Skimming on Train 2 (non-construction)

Installation Completion to Date: 83%

Work Planned for Wednesday 27 December 2017:

- Complete MV cable installation

Work Planned for Thursday 28 December 2017:

- Begin Fiber Optic cable Installation
- Install Transformer
- Repair GWTS Ground

Please let me know if you need additional information.

Kevin McKeage, E.I.
Engineer
Cell: (316) 765-1486
Office: (505) 933-6417
kmckeage@eaest.com
EA Engineering, Science, and Technology, Inc., PBC
320 Gold Ave, Suite. 1300
Albuquerque, NM 87102
www.eaest.com

DAILY FIELD ACTIVITIES SUMMARY REPORT		
PROJECT NAME: KAFB Well 106239 Conveyance Line Installation		
Date and Day: 12-26-17	Time Shift Beginning: 0700	Time Shift Ending: 1415
Project Number: 62599DM01		Contract/Task Order No.:
Client: USACE		Report By: Kevin McKeage
Contractor(s): Wilson Electric		Project Manager: Devon Jercinovic
Design Manager:		Oversight Manager: Peter Ferrari
Design Engineer: George Nemeth		Site Engineer: Tyler Curley
Weather: Clear, Warm 58°F		Logbook Number: NA
Personnel Onsite	**Name**	**Reason for Being Onsite**
EA:	Peter Ferrari	Safety Oversight
Contractors: (Include type of equipment and number of personnel)	Jamie Perez Britt Crooks Eric Kucevic Victor Mardonedo Francisco Gonzales	Electrical Contractor
Other/Visitors:	Trent Simpler	USACE

Work Performed

Planned Activities:

- Install MV cable from sta 12+00 to sta 2+75

Completed Activities:

- Install MV cable from sta 12+00 to sta 2+75

Material Deliveries:

- None

Construction Quality Control Activities or Samples Collected:

- None. No CQM report today.

Observations or Possible Variations from Specifications:

- None

DAILY FIELD ACTIVITIES SUMMARY REPORT	
Anticipated Activities for the Following Day	
• Continue MV cable installation. **Planned Material Deliveries:** • None	
Contractor Reports, Manifests, Documents Reviewed and Logged:	
None	
Report Prepared By (Name and Date)	
Kevin McKeage	Date: 26 December 2017

EA Engineering, Science, and Technology, Inc

Employee/Visitor Register and Safety Brief				
Date:		12-26-17		
Site Entry/Exit		Name (Printed)	Signature	Company
Time In	Time Out			
0700	1420	Pete Ferrand		EA
0700	1415	Britt Crooks		Wilson
0700		Francisco Gonzalez		Wilson
0700		Eric Lucero		Wilson
0700		Victor Maldonado		Wilson
0700	↓	Jaime Trevino Perez		Wilson

EA ENGINEERING, SCIENCE AND TECHNOLOGY, INC.
SAFETY MEETING REPORT

Date: 12-26-17	Time: 0725	Duration of meeting: 5 min	Project #
Location: Field Office, KAFB, 1616 Perimeter Circle		Task: Pull power wire from Sta 12+00 to electrical pad VA lot	

Type of meeting: ___ Daily ___ Weekly ___ Monthly ___ Other: _____

Items/Issues discussed:

1. Emergency contact
2. Concertina Route
3. Safety concerning pulling rope
4. Staying alert after long weekend
5. PPE -

Attach minutes of safety meeting if taken.

Safety questions/issues raised:	Actions/Follow-up needed:
1.	
2.	
3.	
4.	
5.	
6.	

Remarks:

Meeting conducted by:
Pete Ferrari

EA Engineering, Science, and Technology, Inc.

DAILY SAFETY INSPECTION CHECKLIST
(TO BE COMPLETED EACH DAY OF CONSTRUCTION OR HTRW SITE ACTIVITIES)

Site: Kirtland AFB Bulk Fuels GWTS Expansion
Location: Kirtland AFB, NM
Project No.: 62599DM01
Client: USACE Albuquerque District

Prepared by SSHO: Pete Ferrari
Project Manager: Devon Jercinovic
Date: 12-26-2017

Rating	Y	N	N/A	Comments/Immediate Corrective Action[1]
Accident Prevention Plan (APP) and Site Safety and Health Plan (SSHP) General Requirements				
Are there new onsite personnel? • Did they receive pre-entry briefing and are their names recorded in field logbook or daily log? • Was the USACE PM made aware of the new personnel. • Required training and medical surveillance documentation received (e.g., 40-hr, 8 hr, etc.)?		✓		
Did personnel sign in/out of site?		✓		
Daily tailgate safety meetings conducted and documented?		✓		
Were new activities performed today? Were hazards identified, discussed during the daily safety tailgate, and incorporated into revised APP/SSHP?		✓		
New materials brought on site? MSDSs available?		✓		
Exclusion (EZ), Contamination Reduction (CRZ), and Support Zones (SZ) delineated and enforced?			✓	
General housekeeping measures in place to prevent hazards?	✓			
Emergency Planning				
Were there any changes to emergency contact names, telephone numbers, or hospital? If so, were site personnel made aware and was information distributed/reposted.		✓		
Adequate safety equipment inventory available?	✓			
Fire extinguisher available (monthly inspection of extinguisher will suffice)	✓			
Eyewash station(s) functioning and in place (weekly inspection of eye wash station will suffice)?	✓			
First aid supplies available (weekly inspection of first aid kit will suffice)?	✓			
Communication equipment readily available for emergencies?	✓			
Any reported accidents/incidents at this site? If so, were accident reporting procedures followed?		✓		
Air Monitoring				
Monitoring equipment specified in SSHP available and in working order? Air monitoring instrumentation for this site includes – check each if required/on site, note deficiencies in comments: • Combustible gas meter • Organic vapor analyzer • Contaminant specific analyzer for benzene (if total organic vapor concentrations exceed 0.5 ppm)			✓	
Monitoring equipment calibrated and calibration records			✓	

Y = Satisfactory or Yes; N = Unsatisfactory or No; N/A = Not applicable

Rating	Y	N	N/A	Comments/Immediate Corrective Action[1]
available?				
Environmental and personnel monitoring performed as specified in SSHP?				
PPE				
Proper dermal protection worn by EA and subcontracted employees when handling/ contacting hazardous chemicals or contaminated environmental media?				
Required PPE (hard hats, safety boots / shoes, eye protection with side shields, hearing protection) being worn by EA and subcontracted employees?				
PPE inspection completed by SSHO?				
Drill Rig Operations				
Daily rig inspection completed? Any equipment problems?				
Drill rigs/elevated equipment maintaining minimum 10-ft distance from energized (50 kV) overhead power lines?				
Investigation-derived Waste (IDW)				
Wastes properly staged, secured, and labeled at end of day?				
Additional Comments:				

Peter Feenan
Site Safety and Health Officer's Signature

12-12-2017
Date

[1]If a deficiency is noted that cannot be immediately corrected, the SSHO will monitor the progress in correcting the deficiency and will document following:

- Date the deficiency was identified
- Description of the deficiency
- Name of the person responsible for correcting the deficiency
- Projected date of correction
- Actual date of correction.

Y = Satisfactory or Yes; N = Unsatisfactory or No, N/A = Not applicable

HEALTH AND SAFETY ACTIVITY REPORT

Site: KAFB BFF Extraction Well 106239 KAFB - Location: Ridge crest Rd. sta 2+75 to sta 12+00

Weather Cond.: Clear/Sunny/High 50's Onsite Hours: From 0700 To 1415

Changes in PPE Levels[1]	Work Operations	Reasons for Change
None		

Site Safety and Health Plan Violations	Corrective Action Specified	Corrective Action Taken [2](yes/no)
None		

Observations and Comments:

Completed by: Pete Ferrari Date: 12-26-2017
Site Health and Safety Supervisor

[1]Only SSHO may change PPE levels, using only criteria specified in APP/SSHP.
[2]If a deficiency is noted that cannot be immediately corrected, the SSHO will monitor the progress in correcting the deficiency and will document following:

- Date the deficiency was identified
- Description of the deficiency
- Name of the person responsible for correcting the deficiency
- Projected date of correction
- Actual date of correction.

From:	McKeage, Kevin
To:	Simpler, Trent SPA; Amy Sanchez; Phaneuf, Mark J SPA (Mark.J.Phaneuf@usace.army.mil); Carlos Salazar; Linda Dreeland
Cc:	Jercinovic, Devon; McKeage, Kevin; Curley, Tyler; Ferrari, Peter; Bowman, Matthew; Rief, Lucas
Subject:	Activity Report for KAFB Well 106239 Conveyance Line Installation 27 December 2017
Date:	Wednesday, December 27, 2017 5:01:54 PM
Attachments:	Daily Field Activities Summary Report 12-27-17.pdf 032 CQM Daily Report 27DEC17.pdf Photographs 12-27-17.pdf

---

Issues Today 27 Wednesday December 2017:

- None

Resolution of Issues:

- None

Work Performed Today:

- Pulled MV cable between electrical vault next to junction vault on-base to the 12470 V switch on the south side of Ridgecrest Rd.
- Made and mounted 90° fittings onto conduit for fiber optic cable
- Pulled fish line for fiber optic cable
- Pulled fiber optic cable from electrical vault adjacent to junction vault to electrical vault at sta 12+00, coiled up the remaining fiber optic cable in the sta 12+00 vault

Installation Completion to Date: 85%

Work Planned for Thursday 28 December 2017:

- Complete fiber optic cable install from the GWTS to the VA electrical pad
- Install PLC Panel
- Install Transformer
- Repair GWTS Ground

Please let me know if you need additional information.

Kevin McKeage, E.I.
Engineer
Cell: (316) 765-1486
Office: (505) 933-6417
kmckeage@eaest.com
EA Engineering, Science, and Technology, Inc., PBC
320 Gold Ave, Suite. 1300
Albuquerque, NM 87102
www.eaest.com

DAILY FIELD ACTIVITIES SUMMARY REPORT		
PROJECT NAME: KAFB Well 106239 Conveyance Line Installation		
Date and Day: 12-27-17	Time Shift Beginning: 0700	Time Shift Ending: 1615
Project Number: 62599DM01		Contract/Task Order No.:
Client: USACE		Report By: Kevin McKeage
Contractor(s): Wilson Electric/Netsian		Project Manager: Devon Jercinovic
Design Manager:		Oversight Manager: Peter Ferrari
Design Engineer: George Nemeth		Site Engineer: Tyler Curley
Weather: Clear, Warm 59°F		Logbook Number: NA
Personnel Onsite	**Name**	**Reason for Being Onsite**
EA:	Peter Ferrari	Safety Oversight
Contractors: (Include type of equipment and number of personnel)	Jamie Perez Britt Crooks Eric Kucevic Victor Maldonado Francisco Gonzales Jose Ortega David Molinar Joe Martinez	Electrical Contractor
Other/Visitors:		

Work Performed

Planned Activities:

- Install MV cable from sta 26+35 to Sectionalizer
- Install Fiber Optic cable from sta 26+35 to sta 12+00

Completed Activities:

- Install MV cable from sta 26+35 to Sectionalizer
- Install Fiber Optic cable from sta 26+35 to sta 12+00

Material Deliveries:

- Fiber Optic Cable

Construction Quality Control Activities or Samples Collected:

- CQM Report Attached

Observations or Possible Variations from Specifications:

- None

DAILY FIELD ACTIVITIES SUMMARY REPORT
Anticipated Activities for the Following Day
• Continue MV and Fiber Optic cable, transformer, and PLC Panel installations.
Planned Material Deliveries:
• Transformer
Contractor Reports, Manifests, Documents Reviewed and Logged:
None
Report Prepared By (Name and Date)

Kevin McKeage	Date: 27 December 2017

JCB
JCB

DAILY REPORT

(ATTACH ADDITIONAL SHEETS IF NECESSARY)

CONTRACT NAME:	Kirtland AFB Bulk Fuels Facility Expansion of Dissolved Plume GWTS Design	REPORT NO:	032
CONTRACT NUMBER:	W912DR-12-D-0006	REPORT DATE:	27DEC17
REVISION NUMBER:	-	REVISION DATE:	-
TASK ORDER NUMBER:	DM01	PROJECT NAME / LOCATION:	Kirtland BFF
PROJECT NUMBER:	62599DM01	PROJECT DESCRIPTION:	Installation of KAFB-106239 Conveyance Line
PROJECT MANAGER:	Devon Jercinovic	FIELD QUALITY MANAGER:	Kevin McKeough
CONSTRUCTION MANAGER:	Tyler Earley	SITE SAFETY MANAGER:	Peter Ferrari

AM WEATHER:	Clear Cool	PM WEATHER:	Clear Warm	MAX TEMP (F):	59		

SUMMARY OF WORK PERFORMED TODAY

CQM Inspection of Fiber Optic Cable and Pull.

HEALTH AND SAFETY REPORT

SAFETY ACTIONS TAKEN TODAY/SAFETY INSPECTIONS CONDUCTED (Include Observations, Safety Violations, Corrective Instructions Given, Corrective Actions Taken, and Results of Safety Inspections Conducted:

See Construction Manager's Daily Report

TAILGATE TOPICS:

"

SAFE BEHAVIOR OBSERVATIONS/SELF-ASSESSMENTS:

"

OPERATIONS/PRODUCTION REPORT

WORK FORCE – CONTRACTOR AND SUBCONTRACTOR

Company	Cumulative Total of Work Hours From Previous Report	Total Hours Today	Total Work Hours From Start of Injection Event
See CM's Daily Report.			

EQUIPMENT ON HAND

Description of Equipment	Make/Model/ Manufacturer	Equipment ID Number	Inspection Performed By
Fork lift	JCB, T4	10209660	Britt Crooks
Tugger	Greenlee 6810	10414	Britt Crooks
Feeder	Greenlee 50359715	14209	Britt Crooks

COMMENTS (acceptance status, inspection findings, etc.):

OK

WORK AND/OR TESTS ACCOMPLISHED OR IN PROGRESS

Performed Work/Test for Today: See CM's Daily Report

Planned Work/Test for Tomorrow: "

Planned Work/Test for Next Week: "

CHANGED CONDITIONS/DELAY/CONFLICTS ENCOUNTERED (List any conflicts with the project [i.e., scope of work and/or drawings], delays to the project attributable to site and weather conditions, etc. "

VISITORS AND DISCUSSIONS: "

QUALITY CONTROL REPORT

MATERIALS DELIVERED TO JOB SITE

Quantity/Volume/ Weight	Description of Materials Received	Make/Model/ Manufacturer	Material Lot Number	Inspection Performed By
5000 ft	Fiber Optic Cable (12 strand)	Hitachi 6145g-012	1061	KM

COMMENTS (acceptance status, inspection findings, etc.): Meets Submittal Requirements.

INSPECTIONS PERFORMED

Task/Activity Inspected	Inspection Performed	Findings
Fiber Optic Pull	Visual	OK

TESTS PERFORMED

Task/Activity Tested	Test Performed	Test Results (Pass/Fail) - Criteria
None		

QUALITY ISSUES AND RESOLUTIONS: None

SUBMITTALS INSPECTION / REVIEW

Submittal No.	Submittal Description	Specification/Plan Reference	Submittal Approved?		Comment/Reason/Action
NA	Daily Report	_	Yes ☐	No ☐	Pending
NA	SBO	_	Yes ☐	No ☐	Pending
NA	PTSP	_	Yes ☐	No ☐	Pending

REGULATORY COMPLIANCE REPORT							
PERMIT INSPECTIONS PERFORMED: None							
WASTE ACCUMULATION/STOCKPILE AREA INSPECTION							
Inspection Performed By:	NA			Signature of Inspector:			
Accumulation / Stockpile Area Inspected:							
No of Bins:		No of Tankers		No of Roll-Off Boxes:		No. of Tanks	
Inspection Results: NA							
GENERAL COMMENTS							
General Comments: (rework, directives, etc.): OK							
ATTACHMENTS							
List of Attachments: (examples, as applicable: submittals, meeting minutes, safety meeting minutes, COCs, weight tickets, manifests, profiles, rework item list, RFIs, DCNs, photographs, etc.): Photo log.							
NOTE: Write all entries legibly in ink. Line out all unused portions or designate as "not applicable". Preparer signs first and last name on each completed daily report. This form may be filled out electronically and signed electronically.				PREPARER'S SIGNATURE		DATE: 27 DEC 17	

Location: Station 26+25
Description: 12 Strand Fiber Optic Cable
Date: 27 December 2017 Direction: North

EA Engineering, Science, and Technology, Inc

Employee/Visitor Register and Safety Brief				
Date: 12-27-17				
Site Entry/Exit		Name (Printed)	Signature	Company
Time In	Time Out			
0700	1545	Pete Ferraro		EA
700	1530	Britt Crooks		Wilson
7:00	1530	Victor Maldonado		Wilson
7:00	1530	Jaime Trevino Ruiz		Wilson
7:00	1530	Francisco Gonzalez		Wilson
1020	~~1530~~ 1545	Jose Ortega		Netsian
1020	~~1530~~ 1120	David Molinar		Netsian
1020	1545	Joe Martinez		Netsian Technologies Group
1120	1530	Eric Lawerence		Wilson
0815	1530	Kevin McKaye		EA

EA ENGINEERING, SCIENCE AND TECHNOLOGY, INC.
SAFETY MEETING REPORT

Date: 12-27-2017	Time: 0700	Duration of meeting: 5 min	Project #
Location: GW7.5, Ridgecrest Rd, Electrical Wire pull		Task: Cable run crossing Ridgecrest to switch panel install at VA Pad.	

Type of meeting: ___ Daily ___ Weekly ___ Monthly ___ Other: _____

Items/Issues discussed:

1. House Keeping - Slip, trip, falls
2. Stay Alert & Stay focused on task for
3. Safety
4. Go over dangers of lifting heavy vault covers.
5. Coning off open vaults for pedestrians

Attach minutes of safety meeting if taken.

Safety questions/issues raised:	Actions/Follow-up needed:
1. Joggers along Ridgecrest	will tape off open vaults
2.	
3.	
4.	
5.	
6.	

Remarks:

Meeting conducted by:

Pete Ferrari

EA Engineering, Science, and Technology, Inc.

DAILY SAFETY INSPECTION CHECKLIST (TO BE COMPLETED EACH DAY OF CONSTRUCTION OR HTRW SITE ACTIVITIES)

Site: Kirtland AFB Bulk Fuels GWTS Expansion
Location: Kirtland AFB, NM
Project No.: 62599DM01
Client: USACE Albuquerque District

Prepared by SSHO: Pete Farrand
Project Manager: Devon Jercinovic
Date: 12-27-2017

Rating	Y	N	N/A	Comments/Immediate Corrective Action[1]
Accident Prevention Plan (APP) and Site Safety and Health Plan (SSHP) General Requirements				
Are there new onsite personnel? • Did they receive pre-entry briefing and are their names recorded in field logbook or daily log? • Was the USACE PM made aware of the new personnel. • Required training and medical surveillance documentation received (e.g., 40-hr, 8 hr, etc.)?			✓	
Did personnel sign in/out of site?	✓			
Daily tailgate safety meetings conducted and documented?	✓			
Were new activities performed today? Were hazards identified, discussed during the daily safety tailgate, and incorporated into revised APP/SSHP?			✓	
New materials brought on site? MSDSs available?			✓	
Exclusion (EZ), Contamination Reduction (CRZ), and Support Zones (SZ) delineated and enforced?			✓	
General housekeeping measures in place to prevent hazards?	✓			
Emergency Planning				
Were there any changes to emergency contact names, telephone numbers, or hospital? If so, were site personnel made aware and was information distributed/reposted.		✓		
Adequate safety equipment inventory available?	✓			
Fire extinguisher available (monthly inspection of extinguisher will suffice)	✓			
Eyewash station(s) functioning and in place (weekly inspection of eye wash station will suffice)?	✓			
First aid supplies available (weekly inspection of first aid kit will suffice)?	✓			
Communication equipment readily available for emergencies?	✓			
Any reported accidents/incidents at this site? If so, were accident reporting procedures followed?			✓	
Air Monitoring				
Monitoring equipment specified in SSHP available and in working order? Air monitoring instrumentation for this site includes – check each if required/on site, note deficiencies in comments: • Combustible gas meter • Organic vapor analyzer • Contaminant specific analyzer for benzene (if total organic vapor concentrations exceed 0.5 ppm)			✓	
Monitoring equipment calibrated and calibration records			✓	

Y = Satisfactory or Yes; N = Unsatisfactory or No, N/A = Not applicable

Rating	Y	N	N/A	Comments/Immediate Corrective Action[1]
available?				
Environmental and personnel monitoring performed as specified in SSHP?				
PPE				
Proper dermal protection worn by EA and subcontracted employees when handling/ contacting hazardous chemicals or contaminated environmental media?				
Required PPE (hard hats, safety boots / shoes, eye protection with side shields, hearing protection) being worn by EA and subcontracted employees?				
PPE inspection completed by SSHO?				
Drill Rig Operations				
Daily rig inspection completed? Any equipment problems?				
Drill rigs/elevated equipment maintaining minimum 10-ft distance from energized (50 kV) overhead power lines?				
Investigation-derived Waste (IDW)				
Wastes properly staged, secured, and labeled at end of day?				

Additional Comments:

Peter Jensen
Site Safety and Health Officer's Signature

12-27-2017
Date

[1]If a deficiency is noted that cannot be immediately corrected, the SSHO will monitor the progress in correcting the deficiency and will document following:

- Date the deficiency was identified
- Description of the deficiency
- Name of the person responsible for correcting the deficiency
- Projected date of correction
- Actual date of correction.

HEALTH AND SAFETY ACTIVITY REPORT

Site: KAFB BFF GWTS Expansion Location: Ridgecrest Rd. KAFB-106259 conveyance

Weather Cond.: Partly Cloudy/High 50s Onsite Hours: From 0700 To _____

Changes in PPE Levels[1]	Work Operations	Reasons for Change
None		

Site Safety and Health Plan Violations	Corrective Action Specified	Corrective Action Taken[2] (yes/no)
None		

Observations and Comments:

Completed by: Pete Ferrari Date: 12-27-2017
Site Health and Safety Supervisor

[1]Only SSHO may change PPE levels, using only criteria specified in APP/SSHP.
[2]If a deficiency is noted that cannot be immediately corrected, the SSHO will monitor the progress in correcting the deficiency and will document following:

- Date the deficiency was identified
- Description of the deficiency
- Name of the person responsible for correcting the deficiency
- Projected date of correction
- Actual date of correction.

From:	Curley, Tyler
To:	"Trent.Simpler@usace.army.mil"; "Amy.E.Sanchez@usace.army.mil"; "Carlos.F.Salazar@usace.army.mil"; Becker, Lee; "Mark.J.Phaneuf@usace.army.mil"
Cc:	Jercinovic, Devon; McKeage, Kevin; Morse, Earl; Bowman, Matthew
Subject:	Activity Report for KAFB Well 106239 Conveyance Line Installation 27 December 2017
Date:	Thursday, December 28, 2017 5:26:24 PM
Attachments:	Daily Field Activities Summary Report.pdf Photos 12-28-17.pdf

---

Issues Today 28 Friday December 2017:

- None

Resolution of Issues:

- None

Work Performed Today:

- Installed the PLC on the electrical rack
- Removed the MV cable between Sta 2+75 and the electrical pad and reinstalled the MV cable with the ground wire that was previously left out
- Began installing the splice connections on the MV Cable where splices were needed.

Installation Completion to Date: 85%

Work Planned for Thursday 28 December 2017:

- Complete fiber optic cable install from the GWTS to the VA electrical pad
- Install VFD Panel
- Install Transformer

Please let me know if you need additional information.

Tyler Curley, P.E.
EA Engineering, Science, and Technology, Inc., PBC
320 Gold Avenue, SW Suite 1300
Albuquerque, NM 87120
(505) 715-4422 work
(719) 688-9558 cell
tcurley@eaest.com

DAILY FIELD ACTIVITIES SUMMARY REPORT		
PROJECT NAME: KAFB Well 106239 Conveyance Line Installation		
Date: 12-28-17	Time Shift Beginning: 0700	Time Shift Ending: 1500
Project Number: 62599DM01		Contract/Task Order No.:
Client: USACE		Report By: Tyler Curley
Contractor(s): RMCI		Project Manager: Devon Jercinovic
Design Manager:		Oversight Manager: Tyler Curley
Design Engineer: George Nemeth		Site Engineer: Tyler Curley
Weather: Sunny 55° F		Logbook Number: NA

Personnel Onsite:	Name:	Reason for Being Onsite:
EA	Tyler Curley Pete Ferrari	Construction/Safety Oversight Construction/Safety Oversight
Wilson Electric	Britt Crooks Jaime Perez Eric Kucevic Francisco Gonzales VictorMaldonarto Matthew Walstrom	Electrical Contractor

Work Performed:

Planned Activities:

- MV Fiber Optic cable, transformer, and PLC panel installation

Completed Activities:

- Installed the PLC on the electrical rack
- Removed the MV cable between Sta 2+75 and the electrical pad and reinstalled the MV cable with the ground wire that was previously left out
- Began installing the splice connections on the MV Cable where splices were needed.

Material Deliveries:

- None

Construction Quality Control Activities or Samples Collected:

- None

Observations or Possible Variations from Specifications:

- None

Anticipated Activities for the Following Day:

- Continue MV Fiber Optic cable, transformer, and VFD panel installation

Planned Material Deliveries:

- VFD and transformer

Contractor Reports, Manifests, Documents Reviewed and Logged:

- None

Report Completed By:	
Tyler Curley	Date: 28 December 2017

WORK SAFE
Wilson Electric

EA Engineering, Science, and Technology, Inc

Employee/Visitor Register and Safety Brief				
Date: 12-28-17				
Site Entry/Exit		Name (Printed)	Signature	Company
Time In	Time Out			
07:00	12:00	Tyler Curley		EA
0700	1450	Pete Ferrara		EA
700		Britt Crooks		Wilson
0700		Eric Lucerne		Wilson
0700		Jaime Trevino Perez		Wilson
7:00		Francisco Gonzalez		Wilson
7:00	↓	Victor Maldonado		Wilson
1406	1415	Matthew Walston		Wilson

EA ENGINEERING, SCIENCE AND TECHNOLOGY, INC.
SAFETY MEETING REPORT

Date: 12-28-17	Time: 0700	Duration of meeting: 10 min	Project # 62599.01.M01
Location: KAFB Well 106239		Task: Conveyance Line Install	

Type of meeting: _X_ Daily ____Weekly ____ Monthly ____ Other:_____

Items/Issues discussed:

1. Traffic
2. Heavy lifting
3. Hospital Route
4.
5.

Attach minutes of safety meeting if taken.

Safety questions/issues raised:	Actions/Follow-up needed:
1. None	
2.	
3.	
4.	
5.	
6.	

Remarks: None

Meeting conducted by:
Tyler Curley

EA Engineering, Science, and Technology, Inc.

DAILY SAFETY INSPECTION CHECKLIST
(TO BE COMPLETED EACH DAY OF CONSTRUCTION OR HTRW SITE ACTIVITIES)

Site: KAFB Well 106239
Location: Ridgecrest Dr
Project No.: 68S91M01
Client: USACE

Prepared by SSHO: Tyler Cirley
Project Manager: Devan Jerkovic
Date: 10-26-17

Rating	Y	N	N/A	Comments/Immediate Corrective Action[1]
Accident Prevention Plan (APP) and Site Safety and Health Plan (SSHP) General Requirements				
Are there new onsite personnel? • Did they receive pre-entry briefing and are their names recorded in field logbook or daily log? • Was the USACE PM made aware of the new personnel. • Required training and medical surveillance documentation received (e.g., 40-hr, 8 hr, etc.)?		✓		
Did personnel sign in/out of site?	✓			
Daily tailgate safety meetings conducted and documented?	✓			
Were new activities performed today? Were hazards identified, discussed during the daily safety tailgate, and incorporated into revised APP/SSHP?		✓		
New materials brought on site? MSDSs available?		✓		
Exclusion (EZ), Contamination Reduction (CRZ), and Support Zones (SZ) delineated and enforced?	✓			
General housekeeping measures in place to prevent hazards?	✓			
Emergency Planning				
Were there any changes to emergency contact names, telephone numbers, or hospital? If so, were site personnel made aware and was information distributed/reposted.		✓		
Adequate safety equipment inventory available?	✓			
Fire extinguisher available (monthly inspection of extinguisher will suffice)	✓			
Eyewash station(s) functioning and in place (weekly inspection of eye wash station will suffice)?	✓			
First aid supplies available (weekly inspection of first aid kit will suffice)?	✓			
Communication equipment readily available for emergencies?	✓			
Any reported accidents/incidents at this site? If so, were accident reporting procedures followed?		✓		
Air Monitoring				
Monitoring equipment specified in SSHP available and in working order? Air monitoring instrumentation for this site includes – check each if required/on site, note deficiencies in comments: • Combustible gas meter • Organic vapor analyzer • Contaminant specific analyzer for benzene (if total organic vapor concentrations exceed 0.5 ppm)	✓			
Monitoring equipment calibrated and calibration records	✓			

Y = Satisfactory or Yes; N = Unsatisfactory or No, N/A = Not applicable

Rating	Y	N	N/A	Comments/Immediate Corrective Action[1]
available?				
Environmental and personnel monitoring performed as specified in SSHP?	✓			
PPE				
Proper dermal protection worn by EA and subcontracted employees when handling/ contacting hazardous chemicals or contaminated environmental media?	✓			
Required PPE (hard hats, safety boots / shoes, eye protection with side shields, hearing protection) being worn by EA and subcontracted employees?	✓			
PPE inspection completed by SSHO?	✓			
Drill Rig Operations				
Daily rig inspection completed? Any equipment problems?	✓			
Drill rigs/elevated equipment maintaining minimum 10-ft distance from energized (50 kV) overhead power lines?	✓			
Investigation-derived Waste (IDW)				
Wastes properly staged, secured, and labeled at end of day?			✓	

Additional Comments:

Site Safety and Health Officer's Signature

12-28-17
Date

[1]If a deficiency is noted that cannot be immediately corrected, the SSHO will monitor the progress in correcting the deficiency and will document following:

- Date the deficiency was identified
- Description of the deficiency
- Name of the person responsible for correcting the deficiency
- Projected date of correction
- Actual date of correction.

HEALTH AND SAFETY ACTIVITY REPORT

Site: KAFB well 106239 Location: Ridgecrest Dr

Weather Cond.: Sunny Onsite Hours: From 0700 To _____

Changes in PPE Levels[1]	Work Operations	Reasons for Change
None		

Site Safety and Health Plan Violations	Corrective Action Specified	Corrective Action Taken [2](yes/no)
None		

Observations and Comments:

None

Completed by: Tyler Cutler Date: 12-26-17
Site Health and Safety Supervisor

[1]Only SSHO may change PPE levels, using only criteria specified in APP/SSHP.
[2]If a deficiency is noted that cannot be immediately corrected, the SSHO will monitor the progress in correcting the deficiency and will document following:

- Date the deficiency was identified
- Description of the deficiency
- Name of the person responsible for correcting the deficiency
- Projected date of correction
- Actual date of correction.

From:	Curley, Tyler
To:	"Trent.Simpler@usace.army.mil"; "Amy.E.Sanchez@usace.army.mil"; "Carlos.F.Salazar@usace.army.mil"; "Linda.Dreeland@usace.army.mil"; "Mark.J.Phaneuf@usace.army.mil"
Cc:	Jercinovic, Devon; McKeage, Kevin; Bowman, Matthew; Morse, Earl
Subject:	Activity Report for KAFB Well 106239 Conveyance Line Installation 29 December 2017
Date:	Friday, December 29, 2017 5:05:47 PM
Attachments:	Daily Field Activities Summary Report.pdf Photos 12-29-17.pdf 033 CQM Daily Report 29DEC17.pdf

---

Issues Today 29 Friday December 2017:

- None

Resolution of Issues:

- None

Work Performed Today:

- Installed the ground rods and wire for the electrical rack
- Continued working on the electrical rack
- Completed the splicing the MV cable at Sta 12+08
- Installed the fiber optic cable between Sta 22+26 (junction vault) and the GWTS building
- Installed the communication line (junction vault leak detection) between the junction vault and the GWTS building

Installation Completion to Date: 86%

Work Planned for 2 Tuesday January 2018:

- Continue fiber optic cable install from the GWTS to the VA electrical pad
- Install VFD Panel
- Install Transformer

Please let me know if you need additional information.

Tyler Curley, P.E.
EA Engineering, Science, and Technology, Inc., PBC
320 Gold Avenue, SW Suite 1300
Albuquerque, NM 87120
(505) 715-4422 work
(719) 688-9558 cell
tcurley@eaest.com

DAILY FIELD ACTIVITIES SUMMARY REPORT		
PROJECT NAME: KAFB Well 106239 Conveyance Line Installation		
Date: 12-29-17	Time Shift Beginning: 0700	Time Shift Ending: 1530
Project Number: 62599DM01		Contract/Task Order No.:
Client: USACE		Report By: Tyler Curley
Contractor(s): RMCI		Project Manager: Devon Jercinovic
Design Manager:		Oversight Manager: Tyler Curley
Design Engineer: George Nemeth		Site Engineer: Tyler Curley
Weather: Sunny 60° F		Logbook Number: NA
Personnel Onsite:	**Name:**	**Reason for Being Onsite:**
EA	Tyler Curley Kevin McKeage	Construction/Safety Oversight Construction/Safety Oversight/CQM
Wilson Electric	Britt Crooks Jaime Perez Eric Kucevic Francisco Gonzales Victor Maldonado David Molinas Joe Martinez	Electrical Contractor
I&C Solutions	Preston Patterson	

Work Performed:

Planned Activities:

- Continue MV Fiber Optic cable, transformer, and VFD panel installation

Completed Activities:

- Installed the ground rods and wire for the electrical rack
- Continued working on the electrical rack
- Completed the splicing the MV cable at Sta 12+08
- Installed the fiber optic cable between Sta 22+26 (junction vault) and the GWTS building
- Installed the communication line (junction vault leak detection) between the junction vault and the GWTS building

Material Deliveries:

- VFD panel

Construction Quality Control Activities or Samples Collected:

- Material inspection

Observations or Possible Variations from Specifications:

- None

Anticipated Activities for the Following Day:

- Continue MV Fiber Optic cable, transformer, and VFD panel installation

Planned Material Deliveries:

- Transformer

Contractor Reports, Manifests, Documents Reviewed and Logged:
• None
Report Completed By:

Tyler Curley	Date: 29 December 2017

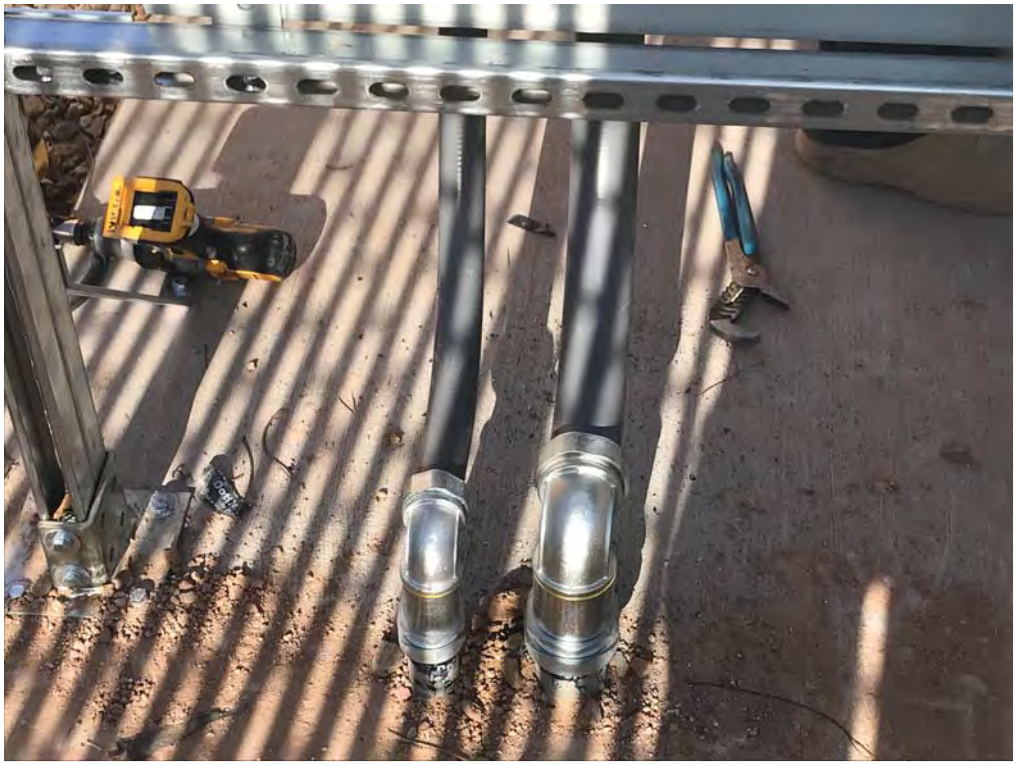

WORK SAFE

DAILY REPORT

(ATTACH ADDITIONAL SHEETS IF NECESSARY)

CONTRACT NAME:	Kirtland AFB Bulk Fuels Facility Expansion of Dissolved Plume GWTS Design	REPORT NO:	033
CONTRACT NUMBER:	W912DR-12-D-0006	REPORT DATE:	29DEC17
REVISION NUMBER:	-	REVISION DATE:	-
TASK ORDER NUMBER:	DM01	PROJECT NAME / LOCATION:	Kirtland BFF
PROJECT NUMBER:	62599DM01	PROJECT DESCRIPTION:	Installation of KAFB-106239 Conveyance Line
PROJECT MANAGER:	Devon Jercinovic	FIELD QUALITY MANAGER:	Kevin McKaye
CONSTRUCTION MANAGER:	Tyler Ritter	SITE SAFETY MANAGER:	Tyler Curley

AM WEATHER:	Clear Cool	PM WEATHER:	Clear Warm	MAX TEMP (F):	59		

SUMMARY OF WORK PERFORMED TODAY

CQM inspection of materials.

HEALTH AND SAFETY REPORT

SAFETY ACTIONS TAKEN TODAY/SAFETY INSPECTIONS CONDUCTED (Include Observations, Safety Violations, Corrective Instructions Given, Corrective Actions Taken, and Results of Safety Inspections Conducted:

See CM's Daily Report

TAILGATE TOPICS:

"

SAFE BEHAVIOR OBSERVATIONS/SELF-ASSESSMENTS:

"

OPERATIONS/PRODUCTION REPORT

WORK FORCE – CONTRACTOR AND SUBCONTRACTOR

Company	Cumulative Total of Work Hours From Previous Report	Total Hours Today	Total Work Hours From Start of Injection Event
See CM's Daily Report.			

EQUIPMENT ON HAND

Description of Equipment	Make/Model/ Manufacturer	Equipment ID Number	Inspection Performed By
Fork lift	JCB, T4	10209660	Britt Crooks

COMMENTS (acceptance status, inspection findings, etc.):

OK

WORK AND/OR TESTS ACCOMPLISHED OR IN PROGRESS

Performed Work/Test for Today:

See CM's Daily Report

Planned Work/Test for Tomorrow:

"

Planned Work/Test for Next Week:

"

CHANGED CONDITIONS/DELAY/CONFLICTS ENCOUNTERED (List any conflicts with the project [i.e., scope of work and/or drawings], delays to the project attributable to site and weather conditions, etc. "

VISITORS AND DISCUSSIONS: "

QUALITY CONTROL REPORT

MATERIALS DELIVERED TO JOB SITE

Quantity/Volume/ Weight	Description of Materials Received	Make/Model/ Manufacturer	Material Lot Number	Inspection Performed By
1	VFD in NEMA 4X Panel	Rockwell Automation	—	KM
5	Copper grounding Rods	—	—	KM
4 spools	#12 THHN wire	Republic Wire Inc.	—	KM

COMMENTS (acceptance status, inspection findings, etc.): Meet specifications

INSPECTIONS PERFORMED

Task/Activity Inspected	Inspection Performed	Findings
Wire Pulling	Visual	OK

TESTS PERFORMED

Task/Activity Tested	Test Performed	Test Results (Pass/Fail) - Criteria
None		

QUALITY ISSUES AND RESOLUTIONS: None

SUBMITTALS INSPECTION / REVIEW

Submittal No.	Submittal Description	Specification/Plan Reference	Submittal Approved?		Comment/Reason/Action
NA	Daily Report	-	Yes ☐	No ☐	Pending
NA	SBO	-	Yes ☐	No ☐	Pending
NA	PTSP	-	Yes ☐	No ☐	Pending

REGULATORY COMPLIANCE REPORT							
PERMIT INSPECTIONS PERFORMED: None							
WASTE ACCUMULATION/STOCKPILE AREA INSPECTION							
Inspection Performed By:	NA			Signature of Inspector:			
Accumulation / Stockpile Area Inspected:							
No of Bins:		No of Tankers		No of Roll-Off Boxes:		No. of Tanks	
Inspection Results: NA							
GENERAL COMMENTS							
General Comments: (rework, directives, etc.): OK							
ATTACHMENTS							
List of Attachments: (examples, as applicable: submittals, meeting minutes, safety meeting minutes, COCs, weight tickets, manifests, profiles, rework item list, RFIs, DCNs, photographs, etc.): Photo log							
NOTE: Write all entries legibly in ink. Line out all unused portions or designate as "not applicable". Preparer signs first and last name on each completed daily report. This form may be filled out electronically and signed electronically.				PREPARER'S SIGNATURE		DATE: 27DEC17	

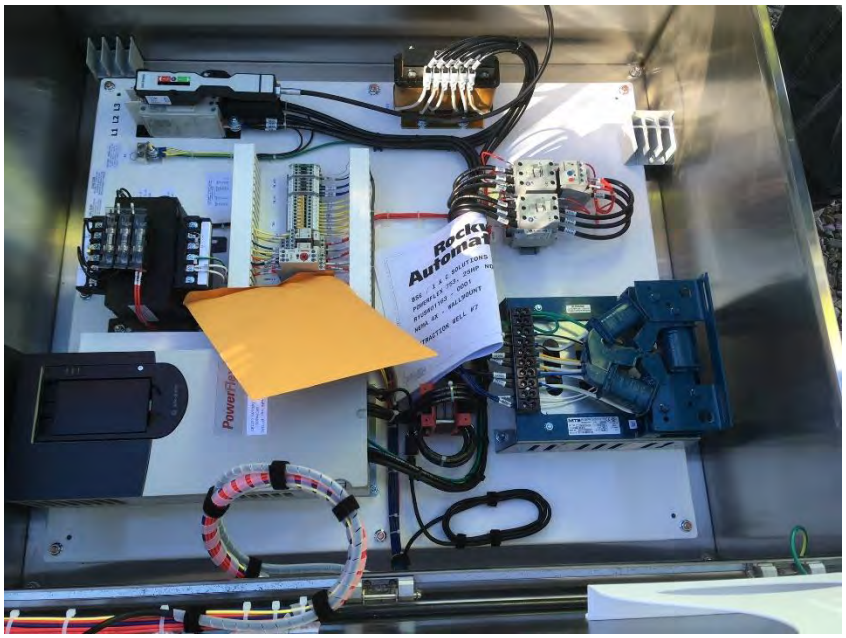

Location: Electrical Pad
Description: VFD in NEMA 4X Panel
Date: 29 December 2017 Direction: Down

Location: Electrical Pad
Description: Copper Grounding Rods
Date: 29 December 2017 Direction: Down

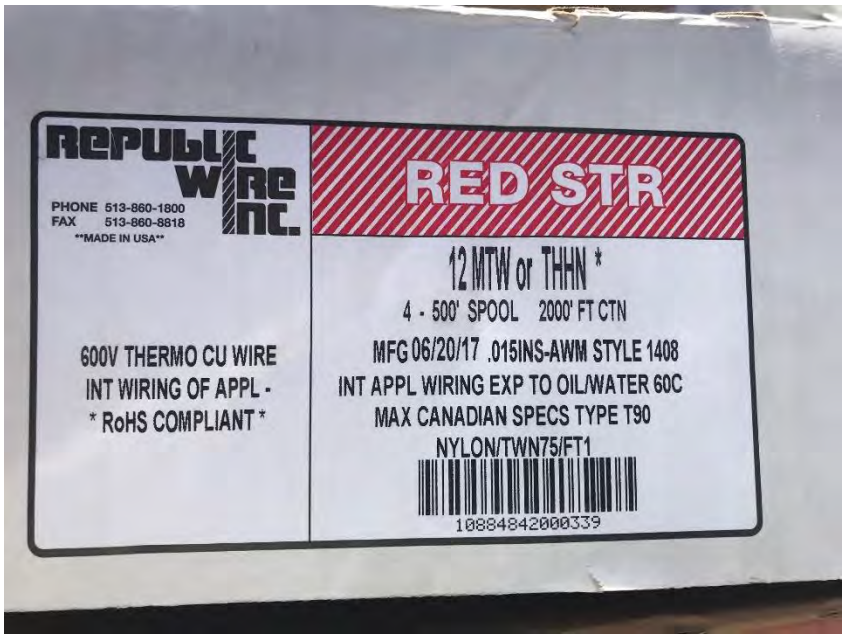

Location: Station 26+35
Description: #12 Wire for Junction Vault Leak Detection
Date: 29 December 2017 Direction: Down

EA Engineering, Science, and Technology, Inc

Employee/Visitor Register and Safety Brief				
Date: 12-29-17				
Site Entry/Exit		Name (Printed)	Signature	Company
Time In	Time Out			
07:00	1530	Tyler Curtley		EA
0700	0730	Pete Ferrari		EA
0700	1430	Victor Maldonado		WILSON
0700	1515	Jaime Jesus Perez		wilson
7:00	1515	FRANCISCO GONZALEZ		WILSON
700	1515	Brian Crooks		Wilson
0700	1430	Eric Lucero		wilson
8:00	1530	David Molinar		Nelson
8:00	1530	Joe Martinez		Nelson

EA ENGINEERING, SCIENCE AND TECHNOLOGY, INC.
SAFETY MEETING REPORT

Date: 12-29-17	**Time:** 0700	**Duration of meeting:** 10min	**Project #** 68348.001
Location: KAFB Well 106239		**Task:** Conveyance Line Install	

Type of meeting: _X_ Daily ___ Weekly ___ Monthly ___ Other:_____

Items/Issues discussed:

1. Slips, trips, falls
2. Traffic
3. Heavy lifting
4. On base emergency
5.

Attach minutes of safety meeting if taken.

Safety questions/issues raised:	Actions/Follow-up needed:
1. None	
2.	
3.	
4.	
5.	
6.	

Remarks: None

Meeting conducted by:
Tyler Curley

EA Engineering, Science, and Technology, Inc.

DAILY SAFETY INSPECTION CHECKLIST
(TO BE COMPLETED EACH DAY OF CONSTRUCTION OR HTRW SITE ACTIVITIES)

Site: KAFB Well 106239
Location: Ridgecrest Dr
Project No.: 6454 PM01
Client: USACE

Prepared by SSHO: Tyler Curley
Project Manager: Devon Jerominic
Date: 12-20-17

Rating	Y	N	N/A	Comments/Immediate Corrective Action[1]
Accident Prevention Plan (APP) and Site Safety and Health Plan (SSHP) General Requirements				
Are there new onsite personnel? • Did they receive pre-entry briefing and are their names recorded in field logbook or daily log? • Was the USACE PM made aware of the new personnel. • Required training and medical surveillance documentation received (e.g., 40-hr, 8 hr, etc.)?		✓		
Did personnel sign in/out of site?	✓			
Daily tailgate safety meetings conducted and documented?	✓			
Were new activities performed today? Were hazards identified, discussed during the daily safety tailgate, and incorporated into revised APP/SSHP?		✓		
New materials brought on site? MSDSs available?		✓		
Exclusion (EZ), Contamination Reduction (CRZ), and Support Zones (SZ) delineated and enforced?	✓			
General housekeeping measures in place to prevent hazards?	✓			
Emergency Planning				
Were there any changes to emergency contact names, telephone numbers, or hospital? If so, were site personnel made aware and was information distributed/reposted.		✓		
Adequate safety equipment inventory available?	✓			
Fire extinguisher available (monthly inspection of extinguisher will suffice)	✓			
Eyewash station(s) functioning and in place (weekly inspection of eye wash station will suffice)?	✓			
First aid supplies available (weekly inspection of first aid kit will suffice)?	✓			
Communication equipment readily available for emergencies?	✓			
Any reported accidents/incidents at this site? If so, were accident reporting procedures followed?		✓		
Air Monitoring				
Monitoring equipment specified in SSHP available and in working order? Air monitoring instrumentation for this site includes – check each if required/on site, note deficiencies in comments: • Combustible gas meter • Organic vapor analyzer • Contaminant specific analyzer for benzene (if total organic vapor concentrations exceed 0.5 ppm)	✓			
Monitoring equipment calibrated and calibration records				

Y = Satisfactory or Yes; N = Unsatisfactory or No, N/A = Not applicable

Rating	Y	N	N/A	Comments/Immediate Corrective Action[1]
available?				
Environmental and personnel monitoring performed as specified in SSHP?	✓			
PPE				
Proper dermal protection worn by EA and subcontracted employees when handling/ contacting hazardous chemicals or contaminated environmental media?	✓			
Required PPE (hard hats, safety boots / shoes, eye protection with side shields, hearing protection) being worn by EA and subcontracted employees?	✓			
PPE inspection completed by SSHO?	✓			
Drill Rig Operations				
Daily rig inspection completed? Any equipment problems?	✓			
Drill rigs/elevated equipment maintaining minimum 10-ft distance from energized (50 kV) overhead power lines?	✓			
Investigation-derived Waste (IDW)				
Wastes properly staged, secured, and labeled at end of day?			✓	

Additional Comments:

Site Safety and Health Officer's Signature

12-29-17

Date

[1]If a deficiency is noted that cannot be immediately corrected, the SSHO will monitor the progress in correcting the deficiency and will document following:

- Date the deficiency was identified
- Description of the deficiency
- Name of the person responsible for correcting the deficiency
- Projected date of correction
- Actual date of correction.

HEALTH AND SAFETY ACTIVITY REPORT

Site: KAFB Well 106939 Location: Ridgecrest Dr

Weather Cond.: 60°F, Sunny Onsite Hours: From 0700 To 1530

Changes in PPE Levels[1]	Work Operations	Reasons for Change
None		

Site Safety and Health Plan Violations	Corrective Action Specified	Corrective Action Taken [2](yes/no)
None		

Observations and Comments:

None

Completed by: Tyler Curley Date: 12-29-17

Site Health and Safety Supervisor

[1]Only SSHO may change PPE levels, using only criteria specified in APP/SSHP.

[2]If a deficiency is noted that cannot be immediately corrected, the SSHO will monitor the progress in correcting the deficiency and will document following:

- Date the deficiency was identified
- Description of the deficiency
- Name of the person responsible for correcting the deficiency
- Projected date of correction
- Actual date of correction.

From:	Curley, Tyler
To:	"Trent.Simpler@usace.army.mil"; "Amy.E.Sanchez@usace.army.mil"; "Carlos.F.Salazar@usace.army.mil"; "Linda.Dreeland@usace.army.mil"; "Mark.J.Phaneuf@usace.army.mil"
Cc:	Jercinovic, Devon; McKeage, Kevin; Morse, Earl; Bowman, Matthew
Subject:	Activity Report for KAFB Well 106239 Conveyance Line Installation 2 January 2018
Date:	Tuesday, January 02, 2018 5:14:05 PM
Attachments:	Daily Field Activities Summary Report.pdf 033 CQM Daily Report 2JAN18.pdf Photos 1-2-17.pdf

---

Issues Today 2 Tuesday January 2018:

- None

Resolution of Issues:

- None

Work Performed Today:

- Installed the VFD panel on the electrical rack
- Continued wiring the electrical rack
- Installed the transformer

Installation Completion to Date: 88%

Work Planned for 3 January 2018:

- Continue MV cable installation (splicing and end terminations)
- Continue wiring the electrical rack

Please let me know if you need additional information.

Tyler Curley, P.E.
EA Engineering, Science, and Technology, Inc., PBC
320 Gold Avenue, SW Suite 1300
Albuquerque, NM 87120
(505) 715-4422 work
(719) 688-9558 cell
tcurley@eaest.com

DAILY FIELD ACTIVITIES SUMMARY REPORT		
PROJECT NAME: KAFB Well 106239 Conveyance Line Installation		
Date: 1-2-18	Time Shift Beginning: 0700	Time Shift Ending: 1500
Project Number: 62599DM01		Contract/Task Order No.:
Client: USACE		Report By: Tyler Curley
Contractor(s): RMCI		Project Manager: Devon Jercinovic
Design Manager:		Oversight Manager: Tyler Curley
Design Engineer: George Nemeth		Site Engineer: Tyler Curley
Weather: Sunny 54° F		Logbook Number: NA
Personnel Onsite:	**Name:**	**Reason for Being Onsite:**
EA	Tyler Curley Dustin Graves	Construction/Safety Oversight Construction/Safety Oversight
Wilson Electric	Britt Crooks Jaime Perez Patrick Trujillo Francisco Gonzales Victor Maldonado	Electrical Contractor

Work Performed:

Planned Activities:

- Continue MV Fiber Optic cable, transformer, and VFD panel installation

Completed Activities:

- Installed the VFD panel on the electrical rack
- Continued wiring the electrical rack
- Installed the transformer

Material Deliveries:

- Transformer

Construction Quality Control Activities or Samples Collected:

- Material inspection

Observations or Possible Variations from Specifications:

- None

Anticipated Activities for the Following Day:

- Continue MV cable installation (splicing and end terminations)
- Continue wiring the electrical rack

Planned Material Deliveries:

- None

Contractor Reports, Manifests, Documents Reviewed and Logged:

- None

Report Completed By:	
Tyler Curley	Date: 2 January 2018

DANGER
OPEN
FEED
B
CLOSED
OPEN

TX
A
B

TX
CLOSED
OPEN
FEED
B
H2A
H2B

CAUTION
TX
CLOSED
OPEN
A
B
H1A
H2A
H2B

DAILY REPORT

(ATTACH ADDITIONAL SHEETS IF NECESSARY)

CONTRACT NAME:	Kirtland AFB Bulk Fuels Facility Expansion of Dissolved Plume GWTS Design	REPORT NO:	034
CONTRACT NUMBER:	W912DR-12-D-0006	REPORT DATE:	2 Jan 2018
REVISION NUMBER:	-	REVISION DATE:	-
TASK ORDER NUMBER:	DM01	PROJECT NAME / LOCATION:	Kirtland BFF
PROJECT NUMBER:	62599DM01	PROJECT DESCRIPTION:	Installation of KAFB-106239 Conveyance Line
PROJECT MANAGER:	Devon Jercinovic	FIELD QUALITY MANAGER:	Tyler Curley
CONSTRUCTION MANAGER:	Tyler Curley	SITE SAFETY MANAGER:	Tyler Curley

AM WEATHER:	Clear, 35°F	PM WEATHER:	clear, 50°F	MAX TEMP (F):	54		

SUMMARY OF WORK PERFORMED TODAY

CQM material inspection

HEALTH AND SAFETY REPORT

SAFETY ACTIONS TAKEN TODAY/SAFETY INSPECTIONS CONDUCTED (Include Observations, Safety Violations, Corrective Instructions Given, Corrective Actions Taken, and Results of Safety Inspections Conducted:

See CM Daily Report

TAILGATE TOPICS:

"

SAFE BEHAVIOR OBSERVATIONS/SELF-ASSESSMENTS:

"

OPERATIONS/PRODUCTION REPORT

WORK FORCE – CONTRACTOR AND SUBCONTRACTOR

Company	Cumulative Total of Work Hours From Previous Report	Total Hours Today	Total Work Hours From Start of Injection Event
See CM Daily Report			

EQUIPMENT ON HAND

Description of Equipment	Make/Model/ Manufacturer	Equipment ID Number	Inspection Performed By
Fork lift	JCB T4	10209660	Brit Crooks

COMMENTS (acceptance status, inspection findings, etc.):

Passes inspection

WORK AND/OR TESTS ACCOMPLISHED OR IN PROGRESS

Performed Work/Test for Today:

See CM Daily Report

Planned Work/Test for Tomorrow:

11

Planned Work/Test for Next Week:

11

CHANGED CONDITIONS/DELAY/CONFLICTS ENCOUNTERED (List any conflicts with the project [i.e., scope of work and/or drawings], delays to the project attributable to site and weather conditions, etc.

VISITORS AND DISCUSSIONS:

QUALITY CONTROL REPORT

MATERIALS DELIVERED TO JOB SITE

Quantity/Volume/ Weight	Description of Materials Received	Make/Model/ Manufacturer	Material Lot Number	Inspection Performed By
1	Transformer	Eaton / Cooper Power Series	-	TC

COMMENTS (acceptance status, inspection findings, etc.):

Meets specifications

INSPECTIONS PERFORMED

Task/Activity Inspected	Inspection Performed	Findings
None		

TESTS PERFORMED

Task/Activity Tested	Test Performed	Test Results (Pass/Fail) - Criteria
None		

QUALITY ISSUES AND RESOLUTIONS: None

SUBMITTALS INSPECTION / REVIEW

Submittal No.	Submittal Description	Specification/Plan Reference	Submittal Approved?		Comment/Reason/Action
NA-	Daily Report	-	Yes ☐	No ☐	Pending
NA -	SBO	-	Yes ☐	No ☐	Pending
NA -	PTSP	-	Yes ☐	No ☐	Pending

REGULATORY COMPLIANCE REPORT							
PERMIT INSPECTIONS PERFORMED: None							
WASTE ACCUMULATION/STOCKPILE AREA INSPECTION							
Inspection Performed By:	NA			Signature of Inspector:			
Accumulation / Stockpile Area Inspected:							
No of Bins:		No of Tankers		No of Roll-Off Boxes:		No. of Tanks	
Inspection Results: NA							
GENERAL COMMENTS							
General Comments: (rework, directives, etc.): Materials meet specs							
ATTACHMENTS							
List of Attachments: (examples, as applicable: submittals, meeting minutes, safety meeting minutes, COCs, weight tickets, manifests, profiles, rework item list, RFIs, DCNs, photographs, etc.): Photo log							
NOTE: Write all entries legibly in ink. Line out all unused portions or designate as "not applicable". Preparer signs first and last name on each completed daily report. This form may be filled out electronically and signed electronically.				PREPARER'S SIGNATURE		2 Jan 2015 DATE	

EATON
COOPER POWER SERIES
3Φ DISTRIBUTION TRANSFORMER ASSEMBLED IN WAUKESHA, WI U.S.A
75
65°C 60Hz
CPK 1750013124
P/N 00028P06XRXA
12470
KNAN
480Y/277
7%Z @85°C
MFG DATE NOV17
HV KV BIL 95
HV NEUTRAL KV BIL
LV KV BIL 30
HV/LV CONDUCTOR
CAUTION - READ INSTRUCTION MANUAL MN000001EN
APPROX. WEIGHT IN LBS.
CORE & COIL 723
TANK & FIT 891
FLUID: 189 GALLONS: 116 906
TOTAL 2520
TAP VOLTAGE MAX AMPS
A 13090 3.3
B 12780 3.4
C 12470 3.5
D 12160 3.6
E 11850 3.7
MAX AMPS AT 75 KVA
7%Z AT BASE KVA AND RATED VOLTAGE
DOE EFFICIENCY COMPLIANT
PROLE = CBUC150300100
BAY = 403810BC04
US LISTED

CP1750013124
2520
00028P06XRXA
NM
Ship To: BORDER STATES ELECTRIC SUPPLY ALB
WILSON ELECTRIC
8472557900040
5601 JEFFERSON STREET NORTHEAST
ALBUQUERQUE NM 87109 - 3412
Shipper: COOPER POWER SYSTEMS
2300 BADGER DR.
WAUKESHA WI 53188
USA
Delivery/ Shipment: 885052005
30783082
Purchase Order:
Customer Material ID:
Customer Item No.
Cooper Mat'l. Number: 00028P06XRXA
Quantity: 1.000

75KVA

128•TWC

EA Engineering, Science, and Technology, Inc

Employee/Visitor Register and Safety Brief

Date: 1/2/18

Site Entry/Exit		Name (Printed)	Signature	Company
Time In	Time Out			
0800	0900	Dustin Graves		EA
0800	1500	Patrick Tryon		Wilson
0800		Jonathan Lee		Wilson
0800		Victor Maldonado		WILSON
0800		Jaime Travis Peace		wilson
0900		Britt Crooks		WILSON
0800		Francisco Gonzalez		WILSON
0900		Tyler Curley		EA

EA ENGINEERING, SCIENCE AND TECHNOLOGY, INC. SAFETY MEETING REPORT			
Date: 1/2/18	Time: 0800	Duration of meeting: 15 min	Project # 62599DM01
Location: Kirtland AFB, NM		Task: Electrical	
Type of meeting: _X_ Daily ___Weekly ___ Monthly ___ Other:_____			
Items/Issues discussed:			
1. See attached			
2. Pinch Points			
3. Heavy Lifting			
4.			
5.			
Attach minutes of safety meeting if taken.			
Safety questions/issues raised:		Actions/Follow-up needed:	
1. None			
2.			
3.			
4.			
5.			
6.			
Remarks:			
Meeting conducted by: Dustin Graves EA			

EA Engineering, Science, and Technology, Inc.

DAILY SAFETY INSPECTION CHECKLIST (TO BE COMPLETED EACH DAY OF CONSTRUCTION OR HTRW SITE ACTIVITIES)

Site: Kirtland AFB Bulk Fuels GWTS Expansion
Location: Kirtland AFB, NM
Project No.: 62599DM01
Client: USACE Albuquerque District

Prepared by SSHO: Tyler Curley
Project Manager: Devon Jercinovic
Date: 1-2-18

Rating	Y	N	N/A	Comments/Immediate Corrective Action[1]
Accident Prevention Plan (APP) and Site Safety and Health Plan (SSHP) General Requirements				
Are there new onsite personnel? • Did they receive pre-entry briefing and are their names recorded in field logbook or daily log? • Was the USACE PM made aware of the new personnel. • Required training and medical surveillance documentation received (e.g., 40-hr, 8 hr, etc.)?	✓			
Did personnel sign in/out of site?	✓			
Daily tailgate safety meetings conducted and documented?	✓			
Were new activities performed today? Were hazards identified, discussed during the daily safety tailgate, and incorporated into revised APP/SSHP?		✓		
New materials brought on site? MSDSs available?	✓			
Exclusion (EZ), Contamination Reduction (CRZ), and Support Zones (SZ) delineated and enforced?	✓			
General housekeeping measures in place to prevent hazards?	✓			
Emergency Planning				
Were there any changes to emergency contact names, telephone numbers, or hospital? If so, were site personnel made aware and was information distributed/reposted.		✓		
Adequate safety equipment inventory available?	✓			
Fire extinguisher available (monthly inspection of extinguisher will suffice)	✓			
Eyewash station(s) functioning and in place (weekly inspection of eye wash station will suffice)?	✓			
First aid supplies available (weekly inspection of first aid kit will suffice)?	✓			
Communication equipment readily available for emergencies?	✓			
Any reported accidents/incidents at this site? If so, were accident reporting procedures followed?		✓		
Air Monitoring				
Monitoring equipment specified in SSHP available and in working order? Air monitoring instrumentation for this site includes – check each if required/on site, note deficiencies in comments: • Combustible gas meter • Organic vapor analyzer • Contaminant specific analyzer for benzene (if total organic vapor concentrations exceed 0.5 ppm)			✓	
Monitoring equipment calibrated and calibration records			✓	

Y = Satisfactory or Yes; N = Unsatisfactory or No, N/A = Not applicable

Rating	Y	N	N/A	Comments/Immediate Corrective Action[1]
available?				
Environmental and personnel monitoring performed as specified in SSHP?	✓			
PPE				
Proper dermal protection worn by EA and subcontracted employees when handling/ contacting hazardous chemicals or contaminated environmental media?	✓			
Required PPE (hard hats, safety boots / shoes, eye protection with side shields, hearing protection) being worn by EA and subcontracted employees?	✓			
PPE inspection completed by SSHO?	✓			
Drill Rig Operations				
Daily rig inspection completed? Any equipment problems?	✓			
Drill rigs/elevated equipment maintaining minimum 10-ft distance from energized (50 kV) overhead power lines?	✓			
Investigation-derived Waste (IDW)				
Wastes properly staged, secured, and labeled at end of day?			✓	

Additional Comments:

Site Safety and Health Officer's Signature

1-2-16
Date

[1]If a deficiency is noted that cannot be immediately corrected, the SSHO will monitor the progress in correcting the deficiency and will document following:

- Date the deficiency was identified
- Description of the deficiency
- Name of the person responsible for correcting the deficiency
- Projected date of correction
- Actual date of correction.

HEALTH AND SAFETY ACTIVITY REPORT

Site: Well KK-039 Location: Ridgecrest Dr

Weather Cond.: Sunny 50F Onsite Hours: From 0700 To _____

Changes in PPE Levels[1]	Work Operations	Reasons for Change
None		

Site Safety and Health Plan Violations	Corrective Action Specified	Corrective Action Taken [2](yes/no)
None		

Observations and Comments:
None

Completed by: Tyler Curley Date: 1-2-18
Site Health and Safety Supervisor

[1]Only SSHO may change PPE levels, using only criteria specified in APP/SSHP.
[2]If a deficiency is noted that cannot be immediately corrected, the SSHO will monitor the progress in correcting the deficiency and will document following:

- Date the deficiency was identified
- Description of the deficiency
- Name of the person responsible for correcting the deficiency
- Projected date of correction
- Actual date of correction.

DAILY REPORT

(ATTACH ADDITIONAL SHEETS IF NECESSARY)

CONTRACT NAME:	Kirtland AFB Bulk Fuels Facility Expansion of Dissolved Plume GWTS Design	REPORT NO:	034
CONTRACT NUMBER:	W912DR-12-D-0006	REPORT DATE:	2 Jan 2018
REVISION NUMBER:	-	REVISION DATE:	-
TASK ORDER NUMBER:	DM01	PROJECT NAME / LOCATION:	Kirtland BFF
PROJECT NUMBER:	62599DM01	PROJECT DESCRIPTION:	Installation of KAFB-106239 Conveyance Line
PROJECT MANAGER:	Devon Jercinovic	FIELD QUALITY MANAGER:	Tyler Curley
CONSTRUCTION MANAGER:	Tyler Curley	SITE SAFETY MANAGER:	Tyler Curley

AM WEATHER:	Clear, 35°F	PM WEATHER:	clear, 50°F	MAX TEMP (F):	54		

SUMMARY OF WORK PERFORMED TODAY

CQM material inspection

HEALTH AND SAFETY REPORT

SAFETY ACTIONS TAKEN TODAY/SAFETY INSPECTIONS CONDUCTED (Include Observations, Safety Violations, Corrective Instructions Given, Corrective Actions Taken, and Results of Safety Inspections Conducted:

See CM Daily Report

TAILGATE TOPICS:

11

SAFE BEHAVIOR OBSERVATIONS/SELF-ASSESSMENTS:

11

OPERATIONS/PRODUCTION REPORT

WORK FORCE – CONTRACTOR AND SUBCONTRACTOR

Company	Cumulative Total of Work Hours From Previous Report	Total Hours Today	Total Work Hours From Start of Injection Event
See CM Daily Report			

EQUIPMENT ON HAND

Description of Equipment	Make/Model/ Manufacturer	Equipment ID Number	Inspection Performed By
Fork lift	JCB T4	10209660	Brit Crooks

COMMENTS (acceptance status, inspection findings, etc.):

Passes inspection

WORK AND/OR TESTS ACCOMPLISHED OR IN PROGRESS

Performed Work/Test for Today:

See CM Daily Report

Planned Work/Test for Tomorrow:

11

Planned Work/Test for Next Week:

11

CHANGED CONDITIONS/DELAY/CONFLICTS ENCOUNTERED (List any conflicts with the project [i.e., scope of work and/or drawings], delays to the project attributable to site and weather conditions, etc.

VISITORS AND DISCUSSIONS:

QUALITY CONTROL REPORT

MATERIALS DELIVERED TO JOB SITE

Quantity/Volume/ Weight	Description of Materials Received	Make/Model/ Manufacturer	Material Lot Number	Inspection Performed By
1	Transformer	Eaton / Cooper Power Series	–	TC

COMMENTS (acceptance status, inspection findings, etc.):

Meets specifications

INSPECTIONS PERFORMED

Task/Activity Inspected	Inspection Performed	Findings
None		

TESTS PERFORMED

Task/Activity Tested	Test Performed	Test Results (Pass/Fail) - Criteria
None		

QUALITY ISSUES AND RESOLUTIONS:

None

SUBMITTALS INSPECTION / REVIEW

Submittal No.	Submittal Description	Specification/Plan Reference	Submittal Approved?		Comment/Reason/Action
NA –	Daily Report	–	Yes ☐	No ☐	Pending
NA –	SBO	–	Yes ☐	No ☐	Pending
NA –	PTSP	–	Yes ☐	No ☐	Pending

REGULATORY COMPLIANCE REPORT							
PERMIT INSPECTIONS PERFORMED: None							
WASTE ACCUMULATION/STOCKPILE AREA INSPECTION							
Inspection Performed By:	NA			Signature of Inspector:			
Accumulation / Stockpile Area Inspected:							
No of Bins:		No of Tankers		No of Roll-Off Boxes:		No. of Tanks	
Inspection Results: NA							
GENERAL COMMENTS							
General Comments: (rework, directives, etc.): Materials meet specs							
ATTACHMENTS							
List of Attachments: (examples, as applicable: submittals, meeting minutes, safety meeting minutes, COCs, weight tickets, manifests, profiles, rework item list, RFIs, DCNs, photographs, etc.): Photo log							
NOTE: Write all entries legibly in ink. Line out all unused portions or designate as "not applicable". Preparer signs first and last name on each completed daily report. This form may be filled out electronically and signed electronically.	PREPARER'S SIGNATURE			2 Jan 2018 DATE			

From:	Curley, Tyler
To:	"Trent.Simpler@usace.army.mil"; "Amy.E.Sanchez@usace.army.mil"; "Carlos.F.Salazar@usace.army.mil"; "Linda.Dreeland@usace.army.mil"; "Mark.J.Phaneuf@usace.army.mil"
Cc:	Jercinovic, Devon; McKeage, Kevin; Morse, Earl; Bowman, Matthew
Subject:	Activity Report for KAFB Well 106239 Conveyance Line Installation 3 January 2018
Date:	Wednesday, January 03, 2018 5:49:36 PM
Attachments:	Daily Field Activities Summary Report.pdf Photos 1-3-17.pdf

---

Issues Today 3 Wednesday January 2018:

- None

Resolution of Issues:

- None

Work Performed Today:

- Continued wiring the electrical rack
- Completed and connected end terminations at the transformer

Installation Completion to Date: 89%

Work Planned for 4 January 2018:

- Continue MV cable installation (splicing and end terminations)
- Continue wiring the electrical rack
- Start pulling wires into the well vault

Please let me know if you need additional information.

Tyler Curley, P.E.
EA Engineering, Science, and Technology, Inc., PBC
320 Gold Avenue, SW Suite 1300
Albuquerque, NM 87120
(505) 715-4422 work
(719) 688-9558 cell
tcurley@eaest.com

DAILY FIELD ACTIVITIES SUMMARY REPORT		
PROJECT NAME: KAFB Well 106239 Conveyance Line Installation		
Date: 1-3-18	Time Shift Beginning: 0700	Time Shift Ending: 1500
Project Number: 62599DM01		Contract/Task Order No.:
Client: USACE		Report By: Tyler Curley
Contractor(s): Wilson Electric		Project Manager: Devon Jercinovic
Design Manager:		Oversight Manager: Tyler Curley
Design Engineer: George Nemeth		Site Engineer: Tyler Curley
Weather: Sunny 54° F		Logbook Number: NA
Personnel Onsite:	**Name:**	**Reason for Being Onsite:**
EA	Tyler Curley Dustin Graves	Construction/Safety Oversight Construction/Safety Oversight
Wilson Electric	Britt Crooks Jaime Perez Patrick Trujillo Francisco Gonzales Victor Maldonado Roberto Gurrola Eric Kucevic	Electrical Contractor
I&C Solutions	Preston Patterson Fred Teller	Site Visit

Work Performed:

Planned Activities:

- Continue MV cable installation (splicing and end terminations)

Completed Activities:

- Continued wiring the electrical rack
- Completed and connected end terminations at the transformer

Material Deliveries:

- None

Construction Quality Control Activities or Samples Collected:

- None

Observations or Possible Variations from Specifications:

- None

Anticipated Activities for the Following Day:

- Continue MV cable installation (splicing and end terminations)
- Continue wiring the electrical rack
- Start pulling wires into the well vault

Planned Material Deliveries:

- None

Contractor Reports, Manifests, Documents Reviewed and Logged:	
• None	
Report Completed By:	
Tyler Curley	Date: 3 January 2018

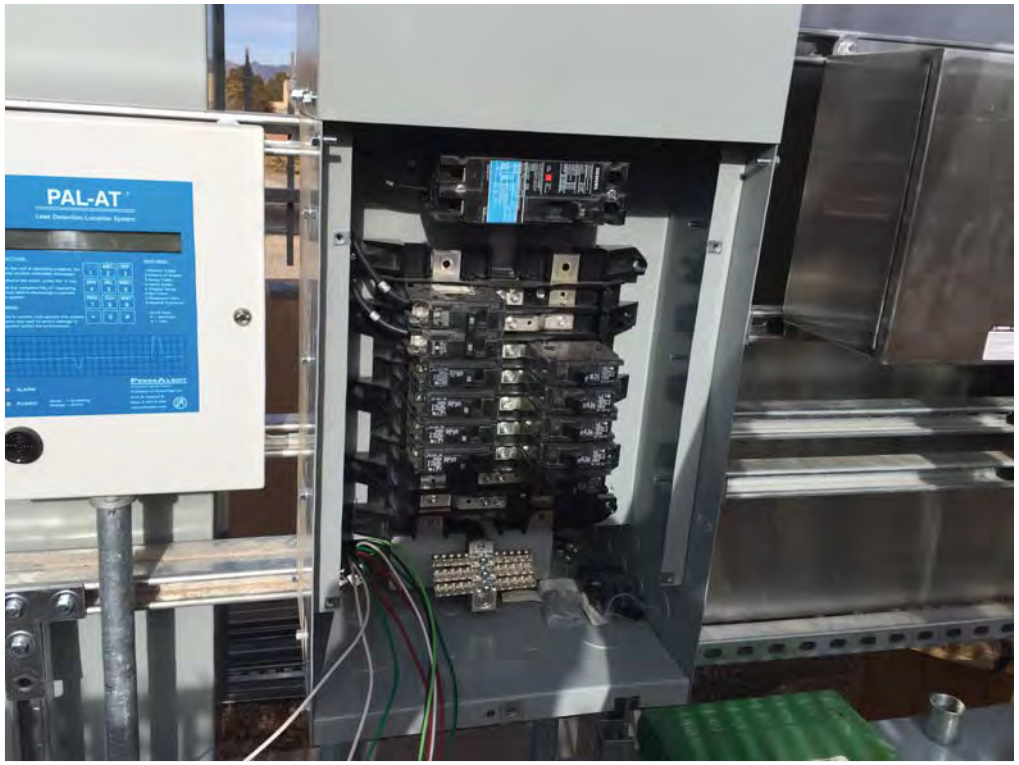
PAL-AT

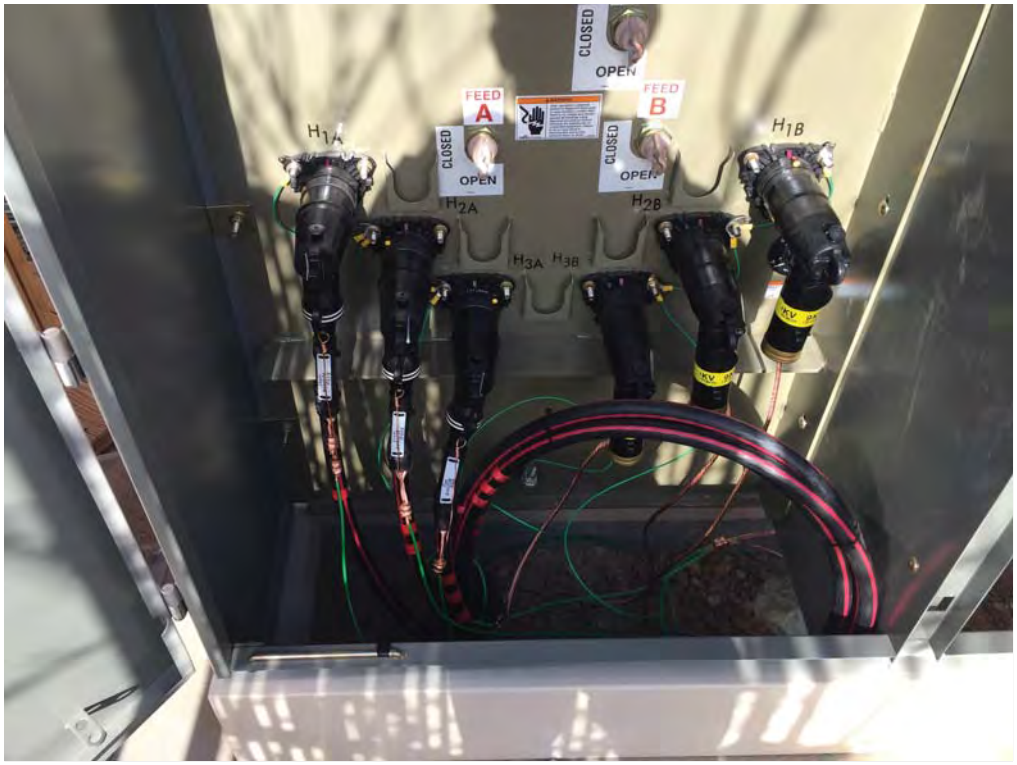
CLOSED
OPEN
FEED
A
B
H1A
H1B
H2A
H2B
H3A
H3B

EA Engineering, Science, and Technology, Inc

Employee/Visitor Register and Safety Brief

Date: 1-3-17

Site Entry/Exit		Name (Printed)	Signature	Company
Time In	Time Out			
0700	1500	Tyler Curley		EA
0900		Jaime Enrico Perez		Wilson
0700		Patrick Tyrrell		wilson
0700		Jonathan Tew		Wilson
0700		Francisco Gonzalez		Wilson
0700		Britt Crooks		WILSON
0700		Victor Maldonado		WILSON
0700		Roberto Guerola		WILSON
0950	↓	Dustin Graves		EA
1400	1420	Eric Lucio		Wilson
1400	1420	Preston Patterson		J&C Solutions
1400	1420	Fred Tiller		J+C Solutions

EA ENGINEERING, SCIENCE AND TECHNOLOGY, INC.
SAFETY MEETING REPORT

Date: 1-3-15	**Time:** 0730	**Duration of meeting:** 10mn	**Project #** 62599.0001
Location: KAFB Well 106739		**Task:** Conveyance Line Install	

Type of meeting: X **Daily** ____ **Weekly** ____ **Monthly** ____ **Other:**_____

Items/Issues discussed:

1. Slips, trips, falls
2. Traffic
3. pinch points
4. sharp objects
5.

Attach minutes of safety meeting if taken.

Safety questions/issues raised:	**Actions/Follow-up needed:**
1. None	
2.	
3.	
4.	
5.	
6.	

Remarks: None

Meeting conducted by:

Tyler Curley

EA Engineering, Science, and Technology, Inc.

DAILY SAFETY INSPECTION CHECKLIST
(TO BE COMPLETED EACH DAY OF CONSTRUCTION OR HTRW SITE ACTIVITIES)

Site: KAFB Well 106239
Location: Ridgecrest Dr
Project No.: 62599.0001
Client: USACE

Prepared by SSHO: Tyler Curley
Project Manager: Deven Jercinovic
Date : 1-3-18

Rating	Y	N	N/A	Comments/Immediate Corrective Action[1]
Accident Prevention Plan (APP) and Site Safety and Health Plan (SSHP) General Requirements				
Are there new onsite personnel? • Did they receive pre-entry briefing and are their names recorded in field logbook or daily log? • Was the USACE PM made aware of the new personnel. • Required training and medical surveillance documentation received (e.g., 40-hr, 8 hr, etc.)?	✓			
Did personnel sign in/out of site?	✓			
Daily tailgate safety meetings conducted and documented?	✓			
Were new activities performed today? Were hazards identified, discussed during the daily safety tailgate, and incorporated into revised APP/SSHP?		✓		
New materials brought on site? MSDSs available?		✓		
Exclusion (EZ), Contamination Reduction (CRZ), and Support Zones (SZ) delineated and enforced?	✓			
General housekeeping measures in place to prevent hazards?	✓			
Emergency Planning				
Were there any changes to emergency contact names, telephone numbers, or hospital? If so, were site personnel made aware and was information distributed/reposted.		✓		
Adequate safety equipment inventory available?	✓			
Fire extinguisher available (monthly inspection of extinguisher will suffice)	✓			
Eyewash station(s) functioning and in place (weekly inspection of eye wash station will suffice)?	✓			
First aid supplies available (weekly inspection of first aid kit will suffice)?	✓			
Communication equipment readily available for emergencies?	✓			
Any reported accidents/incidents at this site? If so, were accident reporting procedures followed?		✓		
Air Monitoring				
Monitoring equipment specified in SSHP available and in working order? Air monitoring instrumentation for this site includes – check each if required/on site, note deficiencies in comments: • Combustible gas meter • Organic vapor analyzer • Contaminant specific analyzer for benzene (if total organic vapor concentrations exceed 0.5 ppm)			✓	
Monitoring equipment calibrated and calibration records			✓	

Y = Satisfactory or Yes; N = Unsatisfactory or No, N/A = Not applicable

Rating	Y	N	N/A	Comments/Immediate Corrective Action[1]
available?			✓	
Environmental and personnel monitoring performed as specified in SSHP?			✓	
PPE				
Proper dermal protection worn by EA and subcontracted employees when handling/ contacting hazardous chemicals or contaminated environmental media?	✓			
Required PPE (hard hats, safety boots / shoes, eye protection with side shields, hearing protection) being worn by EA and subcontracted employees?	✓			
PPE inspection completed by SSHO?	✓			
Drill Rig Operations				
Daily rig inspection completed? Any equipment problems?	✓			
Drill rigs/elevated equipment maintaining minimum 10-ft distance from energized (50 kV) overhead power lines?	✓			
Investigation-derived Waste (IDW)				
Wastes properly staged, secured, and labeled at end of day?			✓	

Additional Comments:

Site Safety and Health Officer's Signature

1-3-18

Date

[1]If a deficiency is noted that cannot be immediately corrected, the SSHO will monitor the progress in correcting the deficiency and will document following:

- Date the deficiency was identified
- Description of the deficiency
- Name of the person responsible for correcting the deficiency
- Projected date of correction
- Actual date of correction.

HEALTH AND SAFETY ACTIVITY REPORT

Site: KAFB Well 106239 Location: Ridgecrest Dr

Weather Cond.: _____ Onsite Hours: From 0700 To _____

Changes in PPE Levels[1]	Work Operations	Reasons for Change

Site Safety and Health Plan Violations	Corrective Action Specified	Corrective Action Taken [2](yes/no)

Observations and Comments:

Completed by: _____ Date: 1/3/18
Site Health and Safety Supervisor

[1]Only SSHO may change PPE levels, using only criteria specified in APP/SSHP.
[2]If a deficiency is noted that cannot be immediately corrected, the SSHO will monitor the progress in correcting the deficiency and will document following:

- Date the deficiency was identified
- Description of the deficiency
- Name of the person responsible for correcting the deficiency
- Projected date of correction
- Actual date of correction.

From:	Curley, Tyler
To:	"Trent.Simpler@usace.army.mil"; "Amy.E.Sanchez@usace.army.mil"; "Carlos.F.Salazar@usace.army.mil"; "Linda.Dreeland@usace.army.mil"; "Mark.J.Phaneuf@usace.army.mil"
Cc:	Jercinovic, Devon; McKeage, Kevin; Morse, Earl; Bowman, Matthew
Subject:	Activity Report for KAFB Well 106239 Conveyance Line Installation 4 January 2018
Date:	Thursday, January 04, 2018 9:32:43 PM
Attachments:	Daily Field Activities Summary Report.pdf Photos 1-4-17.pdf 034 CQM Daily Report 4JAN18.pdf

---

Issues Today 4 Thursday January 2018:

- None

Resolution of Issues:

- None

Work Performed Today:

- Continued wiring the electrical rack
- Began pulling wire into the well vault
- Completed end terminations at J-box on base
- Installed the down hole transducer

Installation Completion to Date: 90%

Work Planned for 5 January 2018:

- Continue MV cable installation (splicing)
- Continue wiring the electrical rack
- Continue pulling wires into the well vault

Please let me know if you need additional information.

Tyler Curley, P.E.
EA Engineering, Science, and Technology, Inc., PBC
320 Gold Avenue, SW Suite 1300
Albuquerque, NM 87120
(505) 715-4422 work
(719) 688-9558 cell
tcurley@eaest.com

DAILY FIELD ACTIVITIES SUMMARY REPORT		
PROJECT NAME: KAFB Well 106239 Conveyance Line Installation		
Date: 1-4-18	Time Shift Beginning: 0700	Time Shift Ending: 1500
Project Number: 62599DM01		Contract/Task Order No.:
Client: USACE		Report By: Tyler Curley
Contractor(s): Wilson Electric		Project Manager: Devon Jercinovic
Design Manager:		Oversight Manager: Tyler Curley
Design Engineer: George Nemeth		Site Engineer: Tyler Curley
Weather: Sunny 54° F		Logbook Number: NA
Personnel Onsite:	**Name:**	**Reason for Being Onsite:**
EA	Tyler Curley Dustin Graves Earl Morse	Construction/Safety Oversight Construction/Safety Oversight Construction/Safety Oversight
USACE	Amy Sanchez Todd Cleveland	Site Visit
Wilson Electric	Britt Crooks Jaime Perez Patrick Trujillo Francisco Gonzales Victor Maldonado Roberto Gurrola	Electrical Contractor
I&C Solutions	Fred Titlen James Jackson	Control Equipment installation

Work Performed:

Planned Activities:

- Continue MV cable installation (splicing and end terminations)
- Continue wiring the electrical rack
- Start pulling wires into the well vault

Completed Activities:

- Continued wiring the electrical rack
- Began pulling wire into the well vault
- Completed end terminations at J-box on base
- Installed the down hole transducer

Material Deliveries:

- None

Construction Quality Control Activities or Samples Collected:

- Material inspection

Observations or Possible Variations from Specifications:

- None

Anticipated Activities for the Following Day:	
• Continue MV cable installation (splicing) • Continue wiring the electrical rack • Continue pulling wires into the well vault **Planned Material Deliveries:** • None	
Contractor Reports, Manifests, Documents Reviewed and Logged:	
• None	
Report Completed By:	
Tyler Curley	Date: 4 January 2018

B
LINE
C
LINE
A
LOAD
B
LOAD
C
LOAD
Hazardous voltage.
Will shock, burn,
or cause death.
Keep out.
If open or unlocked,
immediately call
electric power
and light company.
FPC FEDERAL PACIFIC COMPANY

LOUISVILLE

JB-105

DAILY REPORT

(ATTACH ADDITIONAL SHEETS IF NECESSARY)

CONTRACT NAME:	Kirtland AFB Bulk Fuels Facility Expansion of Dissolved Plume GWTS Design	REPORT NO:	034
CONTRACT NUMBER:	W912DR-12-D-0006	REPORT DATE:	04 Jan 18
REVISION NUMBER:	-	REVISION DATE:	-
TASK ORDER NUMBER:	DM01	PROJECT NAME / LOCATION:	Kirtland BFF
PROJECT NUMBER:	62599DM01	PROJECT DESCRIPTION:	Installation of KAFB-106239 Conveyance Line
PROJECT MANAGER:	Devon Jercinovic	FIELD QUALITY MANAGER:	Tyler Curley
CONSTRUCTION MANAGER:	Tyler Curley	SITE SAFETY MANAGER:	Tyler Curley

AM WEATHER:	Cool Overcast	PM WEATHER:	Warm Clear	MAX TEMP (F):	54	Tyler Curley Tyler Curley	

SUMMARY OF WORK PERFORMED TODAY

CQM material inspection

HEALTH AND SAFETY REPORT

SAFETY ACTIONS TAKEN TODAY/SAFETY INSPECTIONS CONDUCTED (Include Observations, Safety Violations, Corrective Instructions Given, Corrective Actions Taken, and Results of Safety Inspections Conducted:
See CM daily report

TAILGATE TOPICS:

See CM daily report

SAFE BEHAVIOR OBSERVATIONS/SELF-ASSESSMENTS:

See CM daily report

OPERATIONS/PRODUCTION REPORT

WORK FORCE – CONTRACTOR AND SUBCONTRACTOR

Company	Cumulative Total of Work Hours From Previous Report	Total Hours Today	Total Work Hours From Start of Injection Event
See CM daily report			

EQUIPMENT ON HAND

Description of Equipment	Make/Model/ Manufacturer	Equipment ID Number	Inspection Performed By
None			

COMMENTS (acceptance status, inspection findings, etc.):

WORK AND/OR TESTS ACCOMPLISHED OR IN PROGRESS

Performed Work/Test for Today:

See CM daily report

Planned Work/Test for Tomorrow:

See CM daily report

Planned Work/Test for Next Week:

See CM daily report

CHANGED CONDITIONS/DELAY/CONFLICTS ENCOUNTERED (List any conflicts with the project [i.e., scope of work and/or drawings], delays to the project attributable to site and weather conditions, etc.

VISITORS AND DISCUSSIONS:

QUALITY CONTROL REPORT

MATERIALS DELIVERED TO JOB SITE

Quantity/Volume/ Weight	Description of Materials Received	Make/Model/ Manufacturer	Material Lot Number	Inspection Performed By
1	Down hole transducer	In-Situ Level Troll 700		TC

COMMENTS (acceptance status, inspection findings, etc.):

Meets Specifications

INSPECTIONS PERFORMED

Task/Activity Inspected	Inspection Performed	Findings
None033 CQM ~~Daily Report~~ 2JAN18		

TESTS PERFORMED

Task/Activity Tested	Test Performed	Test Results (Pass/Fail) - Criteria
None		

QUALITY ISSUES AND RESOLUTIONS: None

SUBMITTALS INSPECTION / REVIEW

Submittal No.	Submittal Description	Specification/Plan Reference	Submittal Approved?		Comment/Reason/Action
NA	Daily Report	_	Yes ☐	No ☐	Pending
NA	SBO	_	Yes ☐	No ☐	Pending
NA	PTSP	_	Yes ☐	No ☐	Pending

REGULATORY COMPLIANCE REPORT							
PERMIT INSPECTIONS PERFORMED: None							
WASTE ACCUMULATION/STOCKPILE AREA INSPECTION							
Inspection Performed By:	NA			Signature of Inspector:			
Accumulation / Stockpile Area Inspected:							
No of Bins:		No of Tankers		No of Roll-Off Boxes:		No. of Tanks	
Inspection Results: NA							
GENERAL COMMENTS							
General Comments: (rework, directives, etc.): Meet Specifications							
ATTACHMENTS							
List of Attachments: (examples, as applicable: submittals, meeting minutes, safety meeting minutes, COCs, weight tickets, manifests, profiles, rework item list, RFIs, DCNs, photographs, etc.): Photo Log							
NOTE: Write all entries legibly in ink. Line out all unused portions or designate as "not applicable". Preparer signs first and last name on each completed daily report. This form may be filled out electronically and signed electronically.				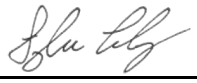 PREPARER'S SIGNATURE		1-4-18 DATE	

In-Situ Inc.

Calibration Report

Report Number: 20171020-551919

221 East Lincoln Avenue, Fort Collins, CO 80524 USA
1-970-498-1500, 1-800-446-7488, FAX: 1-970-498-1598
Visit us at www.in-situ.com

Instrument Details:

Instrument Model:	**Level TROLL 700**
Full Scale Pressure Range:	**300 PSI / 210 m / 692 ft / vented**
Serial Number:	**551919**
Hardware Version:	**5**
Firmware Version:	**3.06**

Calibration Details:

Calibration Result:	**PASS**
Calibration Date:	2017-10-20 01:06:34 (UTC)
Nominal Range of Applied Temperature:	-5 C to +50 C
Temperature Accuracy Specification:	+/- 0.1 C From -5 C to +50 C
Nominal Range of Applied Pressure:	0 PSI to 300 PSI
Pressure Accuracy Specification:	+/- 0.1 %FS from -5 C to +50 C; +/- 0.05 %FS at +15 C

Post-Calibration Check:

Parameter	Applied	Reported	Deviation	Unit
Pressure	300.0060	299.9561	-0.0500	PSI
Pressure	120.0000	120.0004	0.0004	PSI
Pressure	0.0006	-0.0029	-0.0035	PSI
Temperature	38.9290	38.9270	-0.0020	C

Calibration Procedures and Equipment Used:

Automated calibration procedures used.
Manu Agilent Model 34970A SerialNo MY44038768
Manu Mensor Model CPC6000 SerialNo 610294
Manu Instrulab Model 3312A-14-15-24 SerialNo 31103
Manu Instrulab Model 406X-0031-01 SerialNo 31128-1
Manu Agilent Model 53131A-010 SerialNo MY47002282
Manu MENSOR Model 600 SerialNo 622742

Notes:

1. Standards used in this calibration are traceable to the National Institute of Standards and Technology.
2. This calibration report shall not be reproduced, except in full, without the written approval of In-Situ, Inc.
3. A calibration interval of 12 to 18 months is recommended.

In-Situ
Crafted with pride by

Performed By: KK

Report generated 11/6/2017 3:58:22 PM

Copyright © 2005-2017 In-Situ, Inc.

EA Engineering, Science, and Technology, Inc

Employee/Visitor Register and Safety Brief

106239 Vault - Electrical Hookups

Date: 1-4-2018

Site Entry/Exit		Name (Printed)	Signature	Company
Time In	Time Out			
845	850	Amy S	Amy Sc	USACE
8:45	850	Todd C		USACE
9:13	~~1505~~ 1500	Fred Tillen		I+C solution
9:23	~~1505~~ 1500	James Jackson		" "
0700	1200	EARL Morse	Ed M	EA
1200	1500	Dustin Morse	D. M	EA

EA Engineering, Science, and Technology, Inc.

DAILY SAFETY INSPECTION CHECKLIST (TO BE COMPLETED EACH DAY OF CONSTRUCTION OR HTRW SITE ACTIVITIES)

Site: 10623 Conveyance Line
Location: Ridgecrest Vault
Project No.: 62599DM01
Client: USACE

Prepared by SSHO: Earl Morse
Project Manager: Devon Jerome P/C
Date: 1-4-2018

Rating	Y	N	N/A	Comments/Immediate Corrective Action[1]
Accident Prevention Plan (APP) and Site Safety and Health Plan (SSHP) General Requirements				
Are there new onsite personnel? • Did they receive pre-entry briefing and are their names recorded in field logbook or daily log? • Was the USACE PM made aware of the new personnel. • Required training and medical surveillance documentation received (e.g., 40-hr, 8 hr, etc.)?		✓		
Did personnel sign in/out of site?	✓			
Daily tailgate safety meetings conducted and documented?	✓			
Were new activities performed today? Were hazards identified, discussed during the daily safety tailgate, and incorporated into revised APP/SSHP?		✓		
New materials brought on site? MSDSs available?		✓		
Exclusion (EZ), Contamination Reduction (CRZ), and Support Zones (SZ) delineated and enforced?			✓	
General housekeeping measures in place to prevent hazards?	✓			
Emergency Planning				
Were there any changes to emergency contact names, telephone numbers, or hospital? If so, were site personnel made aware and was information distributed/reposted.		✓		
Adequate safety equipment inventory available?	✓			
Fire extinguisher available (monthly inspection of extinguisher will suffice)	✓			
Eyewash station(s) functioning and in place (weekly inspection of eye wash station will suffice)?	✓			
First aid supplies available (weekly inspection of first aid kit will suffice)?	✓			
Communication equipment readily available for emergencies?	✓			
Any reported accidents/incidents at this site? If so, were accident reporting procedures followed?		✓		
Air Monitoring				
Monitoring equipment specified in SSHP available and in working order? Air monitoring instrumentation for this site includes – check each if required/on site, note deficiencies in comments: • Combustible gas meter • Organic vapor analyzer • Contaminant specific analyzer for benzene (if total organic vapor concentrations exceed 0.5 ppm)			✓	
Monitoring equipment calibrated and calibration records				

Y = Satisfactory or Yes; N = Unsatisfactory or No, N/A = Not applicable

Rating	Y	N	N/A	Comments/Immediate Corrective Action[1]
available?			✓	
Environmental and personnel monitoring performed as specified in SSHP?			✓	
PPE				
Proper dermal protection worn by EA and subcontracted employees when handling/ contacting hazardous chemicals or contaminated environmental media?	✓			
Required PPE (hard hats, safety boots / shoes, eye protection with side shields, hearing protection) being worn by EA and subcontracted employees?	✓			
PPE inspection completed by SSHO?	✓			
Drill Rig Operations				
Daily rig inspection completed? Any equipment problems?			✓	
Drill rigs/elevated equipment maintaining minimum 10-ft distance from energized (50 kV) overhead power lines?			✓	
Investigation-derived Waste (IDW)				
Wastes properly staged, secured, and labeled at end of day?	✓			

Additional Comments:

Site Safety and Health Officer's Signature

1-4-2018

Date

[1]If a deficiency is noted that cannot be immediately corrected, the SSHO will monitor the progress in correcting the deficiency and will document following:

- Date the deficiency was identified
- Description of the deficiency
- Name of the person responsible for correcting the deficiency
- Projected date of correction
- Actual date of correction.

HEALTH AND SAFETY ACTIVITY REPORT

Site: 106239 Conveyance Line Location: Ridgecrest Vault

Weather Cond.: Cloudy Onsite Hours: From 0700 To _____

Changes in PPE Levels[1]	Work Operations	Reasons for Change
None		

Site Safety and Health Plan Violations	Corrective Action Specified	Corrective Action Taken [2](yes/no)

Observations and Comments:

Completed by: _____ Date:
Site Health and Safety Supervisor

[1]Only SSHO may change PPE levels, using only criteria specified in APP/SSHP.
[2]If a deficiency is noted that cannot be immediately corrected, the SSHO will monitor the progress in correcting the deficiency and will document following:

- Date the deficiency was identified
- Description of the deficiency
- Name of the person responsible for correcting the deficiency
- Projected date of correction
- Actual date of correction.

EA ENGINEERING, SCIENCE AND TECHNOLOGY, INC.
SAFETY MEETING REPORT

Date: 1-4-2018	**Time:** 0700	**Duration of meeting:** 10	**Project #** 62594DM01
Location: GWTS		**Task:** Electrical Hookup/wiring	

Type of meeting: X **Daily** ___ **Weekly** ___ **Monthly** ___ **Other:** _____

Items/Issues discussed:

1. Slip/trip/fall
2. Working in Vault
3. Cold temps
4.
5.

Attach minutes of safety meeting if taken.

Safety questions/issues raised:	**Actions/Follow-up needed:**
1. None	
2.	
3.	
4.	
5.	
6.	

Remarks: None

Meeting conducted by: Pete Ferarri

From:	Curley, Tyler
To:	"Trent.Simpler@usace.army.mil"; "Amy.E.Sanchez@usace.army.mil"; "Carlos.F.Salazar@usace.army.mil"; "Linda.Dreeland@usace.army.mil"; "Mark.J.Phaneuf@usace.army.mil"
Cc:	Jercinovic, Devon; McKeage, Kevin; Morse, Earl; Bowman, Matthew
Subject:	Activity Report for KAFB Well 106239 Conveyance Line Installation 5 January 2018
Date:	Friday, January 05, 2018 5:05:07 PM
Attachments:	Daily Field Activities Summary Report.pdf Photos 1-5-17.pdf

---

Issues Today 5 Friday January 2018:

- None

Resolution of Issues:

- None

Work Performed Today:

- Continued wiring the electrical rack
- Continued pulling wire into the well vault
- Continued installing conduits and boxes in the well vault

Installation Completion to Date: 91%

Work Planned for 8 January 2018:

- Continue MV cable installation (splicing)
- Continue wiring the electrical rack
- Continue pulling wires into the well vault

Please let me know if you need additional information.

Tyler Curley, P.E.
EA Engineering, Science, and Technology, Inc., PBC
320 Gold Avenue, SW Suite 1300
Albuquerque, NM 87120
(505) 715-4422 work
(719) 688-9558 cell
tcurley@eaest.com

DAILY FIELD ACTIVITIES SUMMARY REPORT		
PROJECT NAME: KAFB Well 106239 Conveyance Line Installation		
Date: 1-5-18	Time Shift Beginning: 0700	Time Shift Ending: 1500
Project Number: 62599DM01		Contract/Task Order No.:
Client: USACE		Report By: Tyler Curley
Contractor(s): Wilson Electric		Project Manager: Devon Jercinovic
Design Manager:		Oversight Manager: Tyler Curley
Design Engineer: George Nemeth		Site Engineer: Tyler Curley
Weather: Sunny 58° F		Logbook Number: NA
Personnel Onsite:	**Name:**	**Reason for Being Onsite:**
EA	Tyler Curley	Construction/Safety Oversight
Wilson Electric	Britt Crooks Jaime Perez Patrick Trujillo Francisco Gonzales Victor Maldonado Roberto Gurrola	Electrical Contractor

Work Performed:

Planned Activities:

- Continue MV cable installation (splicing)
- Continue wiring the electrical rack
- Continue pulling wires into the well vault

Completed Activities:

- Continued wiring the electrical rack
- Continued pulling wire into the well vault
- Continued installing conduits and boxes in the well vault

Material Deliveries:

- None

Construction Quality Control Activities or Samples Collected:

- None

Observations or Possible Variations from Specifications:

- None

Anticipated Activities for the Following Day:

- Continue MV cable installation (splicing)
- Continue wiring the electrical rack
- Continue pulling wires into the well vault

Planned Material Deliveries:

- None

Contractor Reports, Manifests, Documents Reviewed and Logged:	
• None	
Report Completed By:	
Tyler Curley	Date: 5 January 2018

PAL-AT

EA Engineering, Science, and Technology, Inc

1-5-18		Employee/Visitor Register and Safety Brief		
Date:				
Site Entry/Exit		**Name (Printed)**	**Signature**	**Company**
Time In	**Time Out**			
7:00	1500	Tyler Curley		EA
7:00	↓	Jonathan Lee		Wilson
7:00		Roberto Guerrola		W.E.
7:00		Jaime Francisco Perez		wilson
7:00		Patrick Taylor		wilson
7:00		Francisco Gonzalez		Wilson
7:00		Britt Crooks		wilson

EA Engineering, Science, and Technology, Inc.

DAILY SAFETY INSPECTION CHECKLIST (TO BE COMPLETED EACH DAY OF CONSTRUCTION OR HTRW SITE ACTIVITIES)

Site: KAFB Well 106239
Location: Ridgecrest Dr
Project No.: 68527DM01
Client: USACE

Prepared by SSHO: Tyler Curley
Project Manager: Devon Jerkinovic
Date: 1-5-17

Rating	Y	N	N/A	Comments/Immediate Corrective Action[1]
Accident Prevention Plan (APP) and Site Safety and Health Plan (SSHP) General Requirements				
Are there new onsite personnel? • Did they receive pre-entry briefing and are their names recorded in field logbook or daily log? • Was the USACE PM made aware of the new personnel. • Required training and medical surveillance documentation received (e.g., 40-hr, 8 hr, etc.)?		✓		
Did personnel sign in/out of site?	✓			
Daily tailgate safety meetings conducted and documented?	✓			
Were new activities performed today? Were hazards identified, discussed during the daily safety tailgate, and incorporated into revised APP/SSHP?		✓		
New materials brought on site? MSDSs available?		✓		
Exclusion (EZ), Contamination Reduction (CRZ), and Support Zones (SZ) delineated and enforced?	✓			
General housekeeping measures in place to prevent hazards?	✓			
Emergency Planning				
Were there any changes to emergency contact names, telephone numbers, or hospital? If so, were site personnel made aware and was information distributed/reposted.		✓		
Adequate safety equipment inventory available?	✓			
Fire extinguisher available (monthly inspection of extinguisher will suffice)	✓			
Eyewash station(s) functioning and in place (weekly inspection of eye wash station will suffice)?	✓			
First aid supplies available (weekly inspection of first aid kit will suffice)?	✓			
Communication equipment readily available for emergencies?	✓			
Any reported accidents/incidents at this site? If so, were accident reporting procedures followed?		✓		
Air Monitoring				
Monitoring equipment specified in SSHP available and in working order? Air monitoring instrumentation for this site includes – check each if required/on site, note deficiencies in comments: • Combustible gas meter • Organic vapor analyzer • Contaminant specific analyzer for benzene (if total organic vapor concentrations exceed 0.5 ppm)	✓			
Monitoring equipment calibrated and calibration records	✓			

Y = Satisfactory or Yes; N = Unsatisfactory or No, N/A = Not applicable

Rating	Y	N	N/A	Comments/Immediate Corrective Action[1]
available?				
Environmental and personnel monitoring performed as specified in SSHP?	✓			
PPE				
Proper dermal protection worn by EA and subcontracted employees when handling/ contacting hazardous chemicals or contaminated environmental media?	✓			
Required PPE (hard hats, safety boots / shoes, eye protection with side shields, hearing protection) being worn by EA and subcontracted employees?	✓			
PPE inspection completed by SSHO?	✓			
Drill Rig Operations				
Daily rig inspection completed? Any equipment problems?	✓			
Drill rigs/elevated equipment maintaining minimum 10-ft distance from energized (50 kV) overhead power lines?	✓			
Investigation-derived Waste (IDW)				
Wastes properly staged, secured, and labeled at end of day?			✓	

Additional Comments:

Site Safety and Health Officer's Signature

1-5-18

Date

[1]If a deficiency is noted that cannot be immediately corrected, the SSHO will monitor the progress in correcting the deficiency and will document following:

- Date the deficiency was identified
- Description of the deficiency
- Name of the person responsible for correcting the deficiency
- Projected date of correction
- Actual date of correction.

HEALTH AND SAFETY ACTIVITY REPORT

Site: KAFB well 100239 Location: Ridgecrest Dr

Weather Cond.: Sunny 55° Onsite Hours: From 0700 To _____

Changes in PPE Levels[1]	Work Operations	Reasons for Change
None		

Site Safety and Health Plan Violations	Corrective Action Specified	Corrective Action Taken [2](yes/no)
None		

Observations and Comments:

None

Completed by: Tyler Curley Date: 1-5-18
Site Health and Safety Supervisor

[1]Only SSHO may change PPE levels, using only criteria specified in APP/SSHP.
[2]If a deficiency is noted that cannot be immediately corrected, the SSHO will monitor the progress in correcting the deficiency and will document following:

- Date the deficiency was identified
- Description of the deficiency
- Name of the person responsible for correcting the deficiency
- Projected date of correction
- Actual date of correction.

EA ENGINEERING, SCIENCE AND TECHNOLOGY, INC.
SAFETY MEETING REPORT

Date: 1-5-18	**Time:** 0900	**Duration of meeting:** 10min	**Project #** G0599DM01
Location: KAFB Well 106239		**Task:** Conveyance Line Install	

Type of meeting: X **Daily** ____**Weekly** ____ **Monthly** ____ **Other:**_____

Items/Issues discussed:

1. Traffic
2. Pinch points
3. Slips / Trips / Falls
4.
5.

Attach minutes of safety meeting if taken.

Safety questions/issues raised:	**Actions/Follow-up needed:**
1. None	
2.	
3.	
4.	
5.	
6.	

Remarks:
None

Meeting conducted by:
Tyler Curbey

From:	Curley, Tyler
To:	"Trent.Simpler@usace.army.mil"; "Amy.E.Sanchez@usace.army.mil"; "Carlos.F.Salazar@usace.army.mil"; "Linda.Dreeland@usace.army.mil"; "Mark.J.Phaneuf@usace.army.mil"
Cc:	Jercinovic, Devon; McKeage, Kevin; Morse, Earl; Bowman, Matthew; Ferrari, Peter
Subject:	Activity Report for KAFB Well 106239 Conveyance Line Installation 8 January 2018
Date:	Monday, January 08, 2018 9:12:48 PM
Attachments:	Daily Field Activities Summary Report.pdf Photos 1-8-17.pdf 035 CQM Daily Report 08JAN18.pdf

---

Issues Today 8 Monday January 2018:

- None

Resolution of Issues:

- None

Work Performed Today:

- Started repair of the GWTS building lightning grounding wire
- Continued wiring the electrical rack
- Continued wiring within the well vault
- Installed pressure sensor, flow meter, and vault leak detection
- Completed 1 of 3 remaining splices on the MV Cable

Installation Completion to Date: 92%

Work Planned for 9 January 2018:

- Continue repair of the GWTS building lightning grounding wire
- Continue MV cable installation (splicing)
- Continue wiring the electrical rack
- Continue wiring within the well vault

Please let me know if you need additional information.

Tyler Curley, P.E.
EA Engineering, Science, and Technology, Inc., PBC
320 Gold Avenue, SW Suite 1300
Albuquerque, NM 87120
(505) 715-4422 work
(719) 688-9558 cell
tcurley@eaest.com

DAILY FIELD ACTIVITIES SUMMARY REPORT		
PROJECT NAME: KAFB Well 106239 Conveyance Line Installation		
Date: 1-8-18	Time Shift Beginning: 0700	Time Shift Ending: 1500
Project Number: 62599DM01		Contract/Task Order No.:
Client: USACE		Report By: Tyler Curley
Contractor(s): Wilson Electric		Project Manager: Devon Jercinovic
Design Manager:		Oversight Manager: Earl Morse
Design Engineer: George Nemeth		Site Engineer: Tyler Curley
Weather: Sunny 54° F		Logbook Number: NA
Personnel Onsite:	**Name:**	**Reason for Being Onsite:**
EA	Earl Morse Pete Ferrari	Construction/Safety Oversight Construction/Safety Oversight
Wilson Electric	Britt Crooks Jaime Perez Patrick Trujillo Francisco Gonzales Victor Maldonado Roberto Gurrola	Electrical Contractor
I&C Solutions	Preston Patterson Fred Titlen James Jackson	Control Equipment installation

Work Performed:

Planned Activities:

- Continue MV cable installation (splicing)
- Continue wiring the electrical rack
- Continue pulling wires into the well vault

Completed Activities:

- Started repair of the GWTS building lightning grounding wire
- Continued wiring the electrical rack
- Continued wiring within the well vault
- Installed pressure sensor, flow meter, and vault leak detection
- Completed 1 of 3 remaining splices on the MV Cable

Material Deliveries:

- Pressure transmitter, flowmeter, vault leak detection

Construction Quality Control Activities or Samples Collected:

- Material Inspection

Observations or Possible Variations from Specifications:

- None

Anticipated Activities for the Following Day:	
• Continue repair of the GWTS building lightning grounding wire • Continue MV cable installation (splicing) • Continue wiring the electrical rack • Continue wiring within the well vault **Planned Material Deliveries:** • None	
Contractor Reports, Manifests, Documents Reviewed and Logged:	
• None	
Report Completed By:	
Tyler Curley	Date: 8 January 2018

DAILY REPORT

(ATTACH ADDITIONAL SHEETS IF NECESSARY)

CONTRACT NAME:	Kirtland AFB Bulk Fuels Facility Expansion of Dissolved Plume GWTS Design	REPORT NO:	035
CONTRACT NUMBER:	W912DR-12-D-0006	REPORT DATE:	08 Jan 18
REVISION NUMBER:	-	REVISION DATE:	-
TASK ORDER NUMBER:	DM01	PROJECT NAME / LOCATION:	Kirtland BFF
PROJECT NUMBER:	62599DM01	PROJECT DESCRIPTION:	Installation of KAFB-106239 Conveyance Line
PROJECT MANAGER:	Devon Jercinovic	FIELD QUALITY MANAGER:	Tyler Curley
CONSTRUCTION MANAGER:	Tyler Curley	SITE SAFETY MANAGER:	Tyler Curley

AM WEATHER:	Cool Overcast	PM WEATHER:	Warm Clear	MAX TEMP (F):52			

SUMMARY OF WORK PERFORMED TODAY

CQM material inspection

HEALTH AND SAFETY REPORT

SAFETY ACTIONS TAKEN TODAY/SAFETY INSPECTIONS CONDUCTED (Include Observations, Safety Violations, Corrective Instructions Given, Corrective Actions Taken, and Results of Safety Inspections Conducted:
See CM daily report

TAILGATE TOPICS:

See CM daily report

SAFE BEHAVIOR OBSERVATIONS/SELF-ASSESSMENTS:

See CM daily report

OPERATIONS/PRODUCTION REPORT

WORK FORCE – CONTRACTOR AND SUBCONTRACTOR

Company	Cumulative Total of Work Hours From Previous Report	Total Hours Today	Total Work Hours From Start of Injection Event
See CM daily report			

EQUIPMENT ON HAND

Description of Equipment	Make/Model/ Manufacturer	Equipment ID Number	Inspection Performed By
None			

COMMENTS (acceptance status, inspection findings, etc.):

WORK AND/OR TESTS ACCOMPLISHED OR IN PROGRESS

Performed Work/Test for Today:

See CM daily report

Planned Work/Test for Tomorrow:

See CM daily report

Planned Work/Test for Next Week:

See CM daily report

CHANGED CONDITIONS/DELAY/CONFLICTS ENCOUNTERED (List any conflicts with the project [i.e., scope of work and/or drawings], delays to the project attributable to site and weather conditions, etc.

VISITORS AND DISCUSSIONS:

QUALITY CONTROL REPORT

MATERIALS DELIVERED TO JOB SITE

Quantity/Volume/ Weight	Description of Materials Received	Make/Model/ Manufacturer	Material Lot Number	Inspection Performed By
1	Pressure transmitter	Siemens Sitrans P DS III		TC
1	Flow transmitter	Siemen Sitran F M Mag 5000		TC
1	Leak detection	Gems Warrick 16DM 3E2A		TC

COMMENTS (acceptance status, inspection findings, etc.):
Meets Specifications

INSPECTIONS PERFORMED

Task/Activity Inspected	Inspection Performed	Findings
None		

TESTS PERFORMED

Task/Activity Tested	Test Performed	Test Results (Pass/Fail) - Criteria
None		

QUALITY ISSUES AND RESOLUTIONS: None

SUBMITTALS INSPECTION / REVIEW

Submittal No.	Submittal Description	Specification/Plan Reference	Submittal Approved?		Comment/Reason/Action
NA	Daily Report	_	Yes ☐	No ☐	Pending
NA	SBO	_	Yes ☐	No ☐	Pending
NA	PTSP	_	Yes ☐	No ☐	Pending

REGULATORY COMPLIANCE REPORT							
PERMIT INSPECTIONS PERFORMED:	None						
WASTE ACCUMULATION/STOCKPILE AREA INSPECTION							
Inspection Performed By:	NA			Signature of Inspector:			
Accumulation / Stockpile Area Inspected:							
No of Bins:		No of Tankers		No of Roll-Off Boxes:		No. of Tanks	
Inspection Results: NA							
GENERAL COMMENTS							
General Comments: (rework, directives, etc.):	Meet Specifications						
ATTACHMENTS							
List of Attachments: (examples, as applicable: submittals, meeting minutes, safety meeting minutes, COCs, weight tickets, manifests, profiles, rework item list, RFIs, DCNs, photographs, etc.): Photo Log							
NOTE: Write all entries legibly in ink. Line out all unused portions or designate as "not applicable". Preparer signs first and last name on each completed daily report. This form may be filled out electronically and signed electronically.							

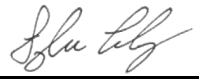

1-8-18

PREPARER'S SIGNATURE DATE

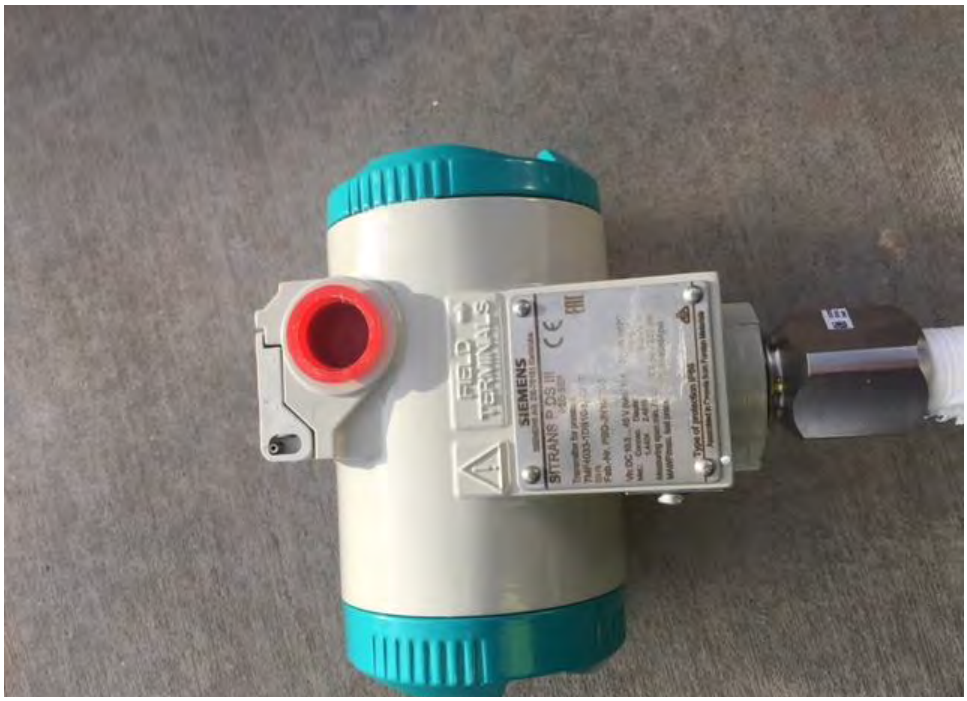

Location: Ridgecrest Dr SE
Description: Pressure transmitter
Date: 08 January 2018 Direction: NA

Location: Ridgecrest Dr SE
Description: Magnetic flow transmitter
Date: 08 January 2018 Direction: NA

Location: Ridgecrest Dr SE
Description: Well vault leak detection
Date: 08 January 2018 Direction: NA

EA Engineering, Science, and Technology, Inc

106239 Conveyance Line — Employee/Visitor Register and Safety Brief

Date: 1-8-2018

Site Entry/Exit		Name (Printed)	Signature	Company
Time In	Time Out			
0645	1130	Eric Morse		EA
[illegible]	1500	Patrick Trujillo		EA
7:00		Rogan Sheets		Wilson Electric
7:00		Victor Maldonado		WILSON
700		Jaime Trujillo Perez		Wilson
700		Jonathon Lee		Wilson
700		Britt Crooks		WILSON
700		Roberto Gonzalez		WILSON
0840	1600	Fred Tilton		IHC Solution
841	1600	James Jackson		" "
8:41	0910	Frostin Patterson		IHC Solutions
1119	1600	Pete Ferrara		EA

HEALTH AND SAFETY ACTIVITY REPORT

Site: 106239 Conveyance Line Location: Ridgecrest Vault

Weather Cond.: Clear / cold Onsite Hours: From 0700 To 1600

Changes in PPE Levels[1]	Work Operations	Reasons for Change
None		

Site Safety and Health Plan Violations	Corrective Action Specified	Corrective Action Taken [2](yes/no)
None		

Observations and Comments:

None

Completed by: [signature] Date: 1/8/18

Site Health and Safety Supervisor

[1]Only SSHO may change PPE levels, using only criteria specified in APP/SSHP.

[2]If a deficiency is noted that cannot be immediately corrected, the SSHO will monitor the progress in correcting the deficiency and will document following:

- Date the deficiency was identified
- Description of the deficiency
- Name of the person responsible for correcting the deficiency
- Projected date of correction
- Actual date of correction.

EA Engineering, Science, and Technology, Inc.

DAILY SAFETY INSPECTION CHECKLIST
(TO BE COMPLETED EACH DAY OF CONSTRUCTION OR HTRW SITE ACTIVITIES)

Site: 106239 Conveyance Line
Location: Ridgecrest Vault
Project No.: 62577DM01
Client: USACE

Prepared by SSHO: Earl Mouse
Project Manager: Devon Jevremovic
Date: 1-8-18

Rating	Y	N	N/A	Comments/Immediate Corrective Action[1]
Accident Prevention Plan (APP) and Site Safety and Health Plan (SSHP) General Requirements				
Are there new onsite personnel? • Did they receive pre-entry briefing and are their names recorded in field logbook or daily log? • Was the USACE PM made aware of the new personnel. • Required training and medical surveillance documentation received (e.g., 40-hr, 8 hr, etc.)?		✓		
Did personnel sign in/out of site?	✓			
Daily tailgate safety meetings conducted and documented?	✓			
Were new activities performed today? Were hazards identified, discussed during the daily safety tailgate, and incorporated into revised APP/SSHP?		✓		
New materials brought on site? MSDSs available?		✓		
Exclusion (EZ), Contamination Reduction (CRZ), and Support Zones (SZ) delineated and enforced?			✓	
General housekeeping measures in place to prevent hazards?	✓			
Emergency Planning				
Were there any changes to emergency contact names, telephone numbers, or hospital? If so, were site personnel made aware and was information distributed/reposted.		✓		
Adequate safety equipment inventory available?	✓			
Fire extinguisher available (monthly inspection of extinguisher will suffice)	✓			
Eyewash station(s) functioning and in place (weekly inspection of eye wash station will suffice)?	✓			
First aid supplies available (weekly inspection of first aid kit will suffice)?	✓			
Communication equipment readily available for emergencies?	✓			
Any reported accidents/incidents at this site? If so, were accident reporting procedures followed?		✓		
Air Monitoring				
Monitoring equipment specified in SSHP available and in working order? Air monitoring instrumentation for this site includes – check each if required/on site, note deficiencies in comments: • Combustible gas meter • Organic vapor analyzer • Contaminant specific analyzer for benzene (if total organic vapor concentrations exceed 0.5 ppm)			✓	
Monitoring equipment calibrated and calibration records			✓	

Y = Satisfactory or Yes; N = Unsatisfactory or No, N/A = Not applicable

Rating	Y	N	N/A	Comments/Immediate Corrective Action[1]
available?				
Environmental and personnel monitoring performed as specified in SSHP?			✓	
PPE				
Proper dermal protection worn by EA and subcontracted employees when handling/ contacting hazardous chemicals or contaminated environmental media?	✓			
Required PPE (hard hats, safety boots / shoes, eye protection with side shields, hearing protection) being worn by EA and subcontracted employees?	✓			
PPE inspection completed by SSHO?	✓			
Drill Rig Operations				
Daily rig inspection completed? Any equipment problems?			✓	
Drill rigs/elevated equipment maintaining minimum 10-ft distance from energized (50 kV) overhead power lines?			✓	
Investigation-derived Waste (IDW)				
Wastes properly staged, secured, and labeled at end of day?	✓			

Additional Comments:

Site Safety and Health Officer's Signature

1-8-2018

Date

[1]If a deficiency is noted that cannot be immediately corrected, the SSHO will monitor the progress in correcting the deficiency and will document following:

- Date the deficiency was identified
- Description of the deficiency
- Name of the person responsible for correcting the deficiency
- Projected date of correction
- Actual date of correction.

EA ENGINEERING, SCIENCE AND TECHNOLOGY, INC.
SAFETY MEETING REPORT

Date: 1-8-2018	**Time:** 0650	**Duration of meeting:** 10 Min	**Project #** 62599[illegible]
Location: 106239 Ridgecrest Vault		**Task:** Wilson running wire/electrical hookup	

Type of meeting: X **Daily** ___ **Weekly** ___ **Monthly** ___ **Other:** _____

Items/Issues discussed:

1. Slip/trip/fall
2. Entering/Exiting vaults
3. Weather
4. Traffic Safety
5.

Attach minutes of safety meeting if taken.

Safety questions/issues raised:	Actions/Follow-up needed:
1. None	
2.	
3.	
4.	
5.	
6.	

Remarks: None

Meeting conducted by:
Earl Morse

From:	Morse, Earl
To:	Simpler, Trent SPA; Phaneuf, Mark J SPA (Mark.J.Phaneuf@usace.army.mil); Amy Sanchez; Linda Dreeland; Carlos Salazar
Cc:	Curley, Tyler; Jercinovic, Devon; McKeage, Kevin; Bowman, Matthew; Ferrari, Peter
Subject:	Activity Report for KAFB Well 106239 Conveyance Line Installation 9 January 2018
Date:	Tuesday, January 09, 2018 4:44:51 PM
Attachments:	Daily Field Activities Summary Report 1-9-18.pdf

---

Issues Today 9 Tuesday January 2018:

- None

Resolution of Issues:

- None

Work Performed Today:

- Completed repair of the GWTS building lightning grounding wire
- Continued wiring the electrical rack
- Continued wiring within the well vault
- Completed the remaining splices on the MV Cable

Installation Completion to Date: 93%

Work Planned for 10 January 2018:

- Receipt and installation of remaining fiber optic cable
- Continue wiring the electrical rack
- Continue wiring within the well vault

Please let me know if you need additional information.

Earl L. Morse, MS, PG
EA Engineering, Science, and Technology, Inc., PBC
Project Manager/Senior Geologist
320 Gold Ave. SW, Suite 1300
Albuquerque, NM 87102
Cell: 505.238-4410
Office: 505.715.4275
Email: emorse@eaest.com
www.eaest.com

DAILY FIELD ACTIVITIES SUMMARY REPORT		
PROJECT NAME: KAFB Well 106239 Conveyance Line Installation		
Date: 1-9-18	Time Shift Beginning: 0645	Time Shift Ending:1530
Project Number: 62599DM01		Contract/Task Order No.:
Client: USACE		Report By: Earl Morse
Contractor(s): Wilson Electric, I&C Solutions		Project Manager: Devon Jercinovic
Design Manager:		Oversight Manager: Earl Morse
Design Engineer: George Nemeth		Site Engineer: Tyler Curley
Weather: Mild 55° F		Logbook Number: NA
Personnel Onsite:	**Name:**	**Reason for Being Onsite:**
EA	Earl Morse	Construction and Safety Oversight/ SSHO
Wilson Electric	Jamie Perez Britt Crooks Victor Maldonado Rogan Skeets Roberto Gurrola	Electrical Contractor
I&C Solutions	Fred Titlen James Jackson	Control Equipment installation

Work Performed:

Planned Activities:

- Complete MV cable splicing
- Continue wiring the electrical rack
- Continue wiring within the well vault
- Repair lightning grounding at the GWTS

Completed Activities:

- Completed MV cable splicing in electrical vault at Sta 21+50
- Continued wiring the electrical rack
- Continued wiring within the well vault
- Repaired lightning grounding at the GWTS

Material Deliveries:

- None

Construction Quality Control Activities or Samples Collected:

- None. No CQM report today.

Observations or Possible Variations from Specifications:

- None

Anticipated Activities for the Following Day:

- Continue wiring the electrical rack
- Continue wiring within the well vault
- Receive and install the remaining fiber optic cable.

Planned Material Deliveries: • Fiber optic cable
Contractor Reports, Manifests, Documents Reviewed and Logged:
None
Report Completed By:
Earl Morse — Date: 09 January 2018

EA Engineering, Science, and Technology, Inc

106239 Conveyance Line — Employee/Visitor Register and Safety Brief

Date: 1-9-2018

Site Entry/Exit		Name (Printed)	Signature	Company
Time In	Time Out			
0650	1515	EARL Morse		EA
0700		Jaime Trevino Perez		Wilson Electric
700		Brift Crooks		Wilson
700		Victor Maldonado		Wilson
7:00		Rogan Skeets		Wilson Electric
7:00		Roberto Guzmola		Wilson
12:10	↓	James Jackson		I&C Solutions
		Fred Tillere		I&C Solutions

EA Engineering, Science, and Technology, Inc.

DAILY SAFETY INSPECTION CHECKLIST
(TO BE COMPLETED EACH DAY OF CONSTRUCTION OR HTRW SITE ACTIVITIES)

Site: 106239 Conveyance Line
Location: Ridgecrest Electrical Vault
Project No.: 62599DM01
Client: USACE

Prepared by SSHO: Earl Morse
Project Manager: Devon Jencmore
Date: 1-9-2018

Rating	Y	N	N/A	Comments/Immediate Corrective Action[1]
Accident Prevention Plan (APP) and Site Safety and Health Plan (SSHP) General Requirements				
Are there new onsite personnel? • Did they receive pre-entry briefing and are their names recorded in field logbook or daily log? • Was the USACE PM made aware of the new personnel. • Required training and medical surveillance documentation received (e.g., 40-hr, 8 hr, etc.)?		✓		
Did personnel sign in/out of site?	✓			
Daily tailgate safety meetings conducted and documented?	✓			
Were new activities performed today? Were hazards identified, discussed during the daily safety tailgate, and incorporated into revised APP/SSHP?		✓		
New materials brought on site? MSDSs available?		✓		
Exclusion (EZ), Contamination Reduction (CRZ), and Support Zones (SZ) delineated and enforced?			✓	
General housekeeping measures in place to prevent hazards?	✓			
Emergency Planning				
Were there any changes to emergency contact names, telephone numbers, or hospital? If so, were site personnel made aware and was information distributed/reposted.		✓		
Adequate safety equipment inventory available?	✓			
Fire extinguisher available (monthly inspection of extinguisher will suffice)	✓			
Eyewash station(s) functioning and in place (weekly inspection of eye wash station will suffice)?	✓			
First aid supplies available (weekly inspection of first aid kit will suffice)?	✓			
Communication equipment readily available for emergencies?	✓			
Any reported accidents/incidents at this site? If so, were accident reporting procedures followed?		✓		
Air Monitoring				
Monitoring equipment specified in SSHP available and in working order? Air monitoring instrumentation for this site includes – check each if required/on site, note deficiencies in comments: • Combustible gas meter • Organic vapor analyzer • Contaminant specific analyzer for benzene (if total organic vapor concentrations exceed 0.5 ppm)			✓	
Monitoring equipment calibrated and calibration records			✓	

Y = Satisfactory or Yes; N = Unsatisfactory or No, N/A = Not applicable

Rating	Y	N	N/A	Comments/Immediate Corrective Action[1]
available?				
Environmental and personnel monitoring performed as specified in SSHP?			✓	
PPE				
Proper dermal protection worn by EA and subcontracted employees when handling/ contacting hazardous chemicals or contaminated environmental media?	✓			
Required PPE (hard hats, safety boots / shoes, eye protection with side shields, hearing protection) being worn by EA and subcontracted employees?	✓			
PPE inspection completed by SSHO?	✓			
Drill Rig Operations				
Daily rig inspection completed? Any equipment problems?			✓	
Drill rigs/elevated equipment maintaining minimum 10-ft distance from energized (50 kV) overhead power lines?			✓	
Investigation-derived Waste (IDW)				
Wastes properly staged, secured, and labeled at end of day?	✓			

Additional Comments:

Site Safety and Health Officer's Signature

1-9-2018

Date

[1]If a deficiency is noted that cannot be immediately corrected, the SSHO will monitor the progress in correcting the deficiency and will document following:

- Date the deficiency was identified
- Description of the deficiency
- Name of the person responsible for correcting the deficiency
- Projected date of correction
- Actual date of correction.

HEALTH AND SAFETY ACTIVITY REPORT

Site: 106239 Conveyance Line Location: Ridgecrest Vault

Weather Cond.: Pt Cloudy/mild Onsite Hours: From 0645 To _____

Changes in PPE Levels[1]	Work Operations	Reasons for Change
None		

Site Safety and Health Plan Violations	Corrective Action Specified	Corrective Action Taken [2](yes/no)
None		

Observations and Comments:

None

Completed by: _____ Date: 1/9/2018
Site Health and Safety Supervisor

[1]Only SSHO may change PPE levels, using only criteria specified in APP/SSHP.
[2]If a deficiency is noted that cannot be immediately corrected, the SSHO will monitor the progress in correcting the deficiency and will document following:

- Date the deficiency was identified
- Description of the deficiency
- Name of the person responsible for correcting the deficiency
- Projected date of correction
- Actual date of correction.

EA ENGINEERING, SCIENCE AND TECHNOLOGY, INC.
SAFETY MEETING REPORT

Date: 1-9-2019	Time: 0650	Duration of meeting: 5 min	Project # 62899.0M.01
Location: Rob 239 Conveyance Line		Task: Electrical Wiring	

Type of meeting: X Daily ___Weekly ___ Monthly ___ Other:_____

Items/Issues discussed:

1. Slip, trip, fall
2. Entry/Exit from vaults
3. Power tools
4. Eye protection
5.

Attach minutes of safety meeting if taken.

Safety questions/issues raised:	Actions/Follow-up needed:
1. None	
2.	
3.	
4.	
5.	
6.	

Remarks: None

Meeting conducted by: Earl Morse

From:	Morse, Earl
To:	Simpler, Trent SPA; Phaneuf, Mark J SPA (Mark.J.Phaneuf@usace.army.mil); Amy Sanchez; Linda Dreeland; Carlos Salazar
Cc:	Jercinovic, Devon; Curley, Tyler; McKeage, Kevin; Bowman, Matthew; Ferrari, Peter
Subject:	Activity Report for KAFB Well 106239 Conveyance Line Installation 10 January 2018
Date:	Wednesday, January 10, 2018 4:44:59 PM
Attachments:	Daily Field Activities Summary Report 1-10-18.pdf Photos 1-10-18 combined.pdf

---

Issues Today 10 Wednesday January 2018:

- I&C found a surge protector in the electrical rack that was missing a screw.

Resolution of Issues:

- The surge protector was removed and taken back to I&C's shop, repaired and reinstalled on the rack.

Work Performed Today:

- Successfully completed the 20KV continuity test of the MV cables
- Completed fiber optic termination and panel installation at the GWTS
- Completed leak detection termination at the electrical rack
- Installed a secondary weather-proof electrical box
- Continued wiring the electrical rack
- Continued wiring within the well vault

Installation Completion to Date: 94%

Work Planned for 10 January 2018:

- Complete remaining installation of the fiber optic cable
- Continue wiring the electrical rack
- Continue wiring within the well vault

Please let me know if you need additional information.

Earl L. Morse, MS, PG
EA Engineering, Science, and Technology, Inc., PBC
Project Manager/Senior Geologist
320 Gold Ave. SW, Suite 1300
Albuquerque, NM 87102
Cell: 505.238-4410
Office: 505.715.4275
Email: emorse@eaest.com
www.eaest.com

DAILY FIELD ACTIVITIES SUMMARY REPORT		
PROJECT NAME: KAFB Well 106239 Conveyance Line Installation		
Date: 1-10-18	Time Shift Beginning: 0650	Time Shift Ending:1530
Project Number: 62599DM01		Contract/Task Order No.:
Client: USACE		Report By: Earl Morse
Contractor(s): Wilson Electric, I&C Solutions, Electric Power Systems		Project Manager: Devon Jercinovic
Design Manager:		Oversight Manager: Earl Morse
Design Engineer: George Nemeth		Site Engineer: Tyler Curley
Weather: Light rain, cold, 45° F		Logbook Number: NA
Personnel Onsite:	**Name:**	**Reason for Being Onsite:**
EA	Earl Morse Pete Ferrari	Construction and Safety Oversight/ SSHO
Wilson Electric	Jamie Perez Britt Crooks Victor Maldonado Rogan Skeets Roberto Gurrola	Electrical Contractor
I&C Solutions	Fred Titlen James Jackson	Control Equipment installation
Electric Power Systems	Derrick Duran	Continuity testing contractor

Work Performed:

Planned Activities:

- Receive and install fiber optic cable
- Perform 20 KV continuity test of the MV cables between the electrical rack and the Z-box on base
- Continue wiring the electrical rack
- Continue wiring within the well vault
- Install a secondary weather-proof box at the electrical panel

Completed Activities:

- Successfully completed 20KV continuity testing of the MV cables
- Continued wiring the electrical rack
- Continued wiring within the well vault
- Installed a secondary weather-proof box at the electrical rack
- Completed fiber optic termination and panel installation at the GWTS
- Completed leak detection termination at the electrical rack

Material Deliveries:

- Weatherproof electrical box

Construction Quality Control Activities or Samples Collected:

- Pending: EA will complete QCM report upon receipt/review/approval of the continuity test report from EPS

Observations or Possible Variations from Specifications:

- None

Anticipated Activities for the Following Day:	
• Continue wiring/testing the electrical rack • Continue wiring/testing within the well vault • Receipt and installation of the remaining fiber optic cable. **Planned Material Deliveries:** • None	
Contractor Reports, Manifests, Documents Reviewed and Logged:	
None	
Report Completed By:	
Earl Morse	Date: 10 January 2018

EA Engineering, Science, and Technology, Inc

106239 Conveyance Line — Employee/Visitor Register and Safety Brief				
Date: 1-10-2018				
Site Entry/Exit		Name (Printed)	Signature	Company
Time In	Time Out			
0650	1200	Earl Morse		EA
0700	1530	Britt Crooks		Wilson
7:00	|	Victor Maldonado		Wilson
7:00	|	Jaime Torres Ruiz		wilson
7:00	|	Rogan Skeels		Wilson Electric
7:00	|	Roberto Gurrola		Wilson Electric
7:30	1040	Todd Cleveland		USACE
8:00	1130	Derrick Duron		CPS
0830	0915	Fred Tillie		IAC Solano
0830	0915		James Jackson	"

EA Engineering, Science, and Technology, Inc.

DAILY SAFETY INSPECTION CHECKLIST (TO BE COMPLETED EACH DAY OF CONSTRUCTION OR HTRW SITE ACTIVITIES)

Site: 106239 Conveyance Line
Location: Ridgecrest Well Vault
Project No.: 62599DM01
Client: USACE

Prepared by SSHO: Evan Morse
Project Manager: Devon Jencinovic
Date: 1-10-2018

Rating	Y	N	N/A	Comments/Immediate Corrective Action[1]
Accident Prevention Plan (APP) and Site Safety and Health Plan (SSHP) General Requirements				
Are there new onsite personnel? • Did they receive pre-entry briefing and are their names recorded in field logbook or daily log? • Was the USACE PM made aware of the new personnel. • Required training and medical surveillance documentation received (e.g., 40-hr, 8 hr, etc.)?		✓		
Did personnel sign in/out of site?	✓			
Daily tailgate safety meetings conducted and documented?	✓			
Were new activities performed today? Were hazards identified, discussed during the daily safety tailgate, and incorporated into revised APP/SSHP?		✓		
New materials brought on site? MSDSs available?		✓		
Exclusion (EZ), Contamination Reduction (CRZ), and Support Zones (SZ) delineated and enforced?			✓	
General housekeeping measures in place to prevent hazards?	✓			
Emergency Planning				
Were there any changes to emergency contact names, telephone numbers, or hospital? If so, were site personnel made aware and was information distributed/reposted.		✓		
Adequate safety equipment inventory available?	✓			
Fire extinguisher available (monthly inspection of extinguisher will suffice)	✓			
Eyewash station(s) functioning and in place (weekly inspection of eye wash station will suffice)?	✓			
First aid supplies available (weekly inspection of first aid kit will suffice)?	✓			
Communication equipment readily available for emergencies?	✓			
Any reported accidents/incidents at this site? If so, were accident reporting procedures followed?		✓		
Air Monitoring				
Monitoring equipment specified in SSHP available and in working order? Air monitoring instrumentation for this site includes – check each if required/on site, note deficiencies in comments: • Combustible gas meter • Organic vapor analyzer • Contaminant specific analyzer for benzene (if total organic vapor concentrations exceed 0.5 ppm)			✓	
Monitoring equipment calibrated and calibration records			✓	

Y = Satisfactory or Yes; N = Unsatisfactory or No, N/A = Not applicable

Rating	Y	N	N/A	Comments/Immediate Corrective Action[1]
available?				
Environmental and personnel monitoring performed as specified in SSHP?			✓	
PPE				
Proper dermal protection worn by EA and subcontracted employees when handling/ contacting hazardous chemicals or contaminated environmental media?			✓	
Required PPE (hard hats, safety boots / shoes, eye protection with side shields, hearing protection) being worn by EA and subcontracted employees?	✓			
PPE inspection completed by SSHO?	✓			
Drill Rig Operations				
Daily rig inspection completed? Any equipment problems?			✓	
Drill rigs/elevated equipment maintaining minimum 10-ft distance from energized (50 kV) overhead power lines?			✓	
Investigation-derived Waste (IDW)				
Wastes properly staged, secured, and labeled at end of day?	✓			

Additional Comments:

Site Safety and Health Officer's Signature

1-10-2018

Date

[1]If a deficiency is noted that cannot be immediately corrected, the SSHO will monitor the progress in correcting the deficiency and will document following:

- Date the deficiency was identified
- Description of the deficiency
- Name of the person responsible for correcting the deficiency
- Projected date of correction
- Actual date of correction.

HEALTH AND SAFETY ACTIVITY REPORT

Site: 106239 Conveyance Line Location: Ridgecrest Well Vault

Weather Cond.: Cloudy, light rain Onsite Hours: From 0650 To 1600

Changes in PPE Levels[1]	Work Operations	Reasons for Change
None		

Site Safety and Health Plan Violations	Corrective Action Specified	Corrective Action Taken [2](yes/no)
None		

Observations and Comments:

None

Completed by: _____ Date: 1-10-2018
Site Health and Safety Supervisor

[1]Only SSHO may change PPE levels, using only criteria specified in APP/SSHP.
[2]If a deficiency is noted that cannot be immediately corrected, the SSHO will monitor the progress in correcting the deficiency and will document following:

- Date the deficiency was identified
- Description of the deficiency
- Name of the person responsible for correcting the deficiency
- Projected date of correction
- Actual date of correction.

EA ENGINEERING, SCIENCE AND TECHNOLOGY, INC.
SAFETY MEETING REPORT

Date: 1-10-2018	**Time:** 0650	**Duration of meeting:** 5 min	**Project #** 42599.01.01
Location: 106239 Conveyance Line, Ridgecrest Vault		**Task:** Electrical Hook up	

Type of meeting: X **Daily** ___ **Weekly** ___ **Monthly** ___ **Other:** _____

Items/Issues discussed:

1. Slip/trip/fall
2. Weather - wind/rain today possible
3. Defensive Driving
4.
5.

Attach minutes of safety meeting if taken.

Safety questions/issues raised:	**Actions/Follow-up needed:**
1. None	
2.	
3.	
4.	
5.	
6.	

Remarks: None

Meeting conducted by:
EARL Morse

From:	Morse, Earl
To:	Simpler, Trent SPA; Phaneuf, Mark J SPA (Mark.J.Phaneuf@usace.army.mil); Amy Sanchez; Carlos Salazar; Linda Dreeland
Cc:	Jercinovic, Devon; Curley, Tyler; McKeage, Kevin; Bowman, Matthew; Ferrari, Peter
Subject:	Activity Report for KAFB Well 106239 Conveyance Line Installation 11 January 2018
Date:	Thursday, January 11, 2018 4:26:34 PM
Attachments:	Daily Field Activities Summary Report 1-11-18.pdf Photos 1-11-18.pdf 037 CQM Daily Report 11JAN18.pdf

---

Issues Today 11 Thursday January 2018:

- None

Resolution of Issues:

- None

Work Performed Today:

- Completed fiber optic cable pull from Sta 12+00 vault to the electrical rack
- Completed fiber optic splice at Sta 12+00 vault and the panel installation at the electrical rack
- Hung the MV cable splices in the Sta 12+00 electrical vault
- Completed electrical rack and well vault labeling

Installation Completion to Date: 95%

Work Planned for 12 January 2018:

- Complete the remaining installation and testing of the fiber optic cable
- Continue with site cleanup

Please let me know if you need additional information.

Earl L. Morse, MS, PG
EA Engineering, Science, and Technology, Inc., PBC
Project Manager/Senior Geologist
320 Gold Ave. SW, Suite 1300
Albuquerque, NM 87102
Cell: 505.238-4410
Office: 505.715.4275
Email: emorse@eaest.com
www.eaest.com

DAILY FIELD ACTIVITIES SUMMARY REPORT		
PROJECT NAME: KAFB Well 106239 Conveyance Line Installation		
Date: 1-11-18	Time Shift Beginning: 0650	Time Shift Ending:1300
Project Number: 62599DM01		Contract/Task Order No.:
Client: USACE		Report By: Earl Morse
Contractor(s): Wilson Electric, Netsian Technical Group		Project Manager: Devon Jercinovic
Design Manager:		Oversight Manager: Earl Morse
Design Engineer: George Nemeth		Site Engineer: Kevin McKeage
Weather: Clear, windy, cold, 48° F		Logbook Number: NA
Personnel Onsite:	**Name:**	**Reason for Being Onsite:**
EA	Earl Morse	Construction and Safety Oversight/ SSHO
Wilson Electric	Jamie Perez Britt Crooks Victor Maldonado Rogan Skeets Roberto Gurrola	Electrical Contractor
Netsian Technical Group	Michael Pearson Steven Benjamin Jose Ortega David Molinay	Fiber Optics Installation

Work Performed:

Planned Activities:

- Receive and install fiber optic cable from STA 12+00 to electrical rack
- Perform testing of fiber optic cable
- Complete labeling of wire and boxes in the vault and electrical rack
- Site clean up

Completed Activities:

- Received and installed fiber optic cable from STA 12+00 to electrical rack
- Completed fiber optic panel installation at the electrical rack
- Spliced fiber optic cables at STA 12+00 electrical vault
- Completed hanging MV cable splices on the electrical vault wall at STA 12+00
- Completed labeling of wire and boxes in the well vault and electrical rack
- Started site clean up

Material Deliveries:

- Fiber optic cable

Construction Quality Control Activities or Samples Collected:

- See Attached

Observations or Possible Variations from Specifications:

- None

Anticipated Activities for the Following Day:	
• Finish installation and testing of fiber optic cable • If power outage is authorized, hook up main power for the entire system • Continued site cleanup. **Planned Material Deliveries:** • None	
Contractor Reports, Manifests, Documents Reviewed and Logged:	
See QCM report	
Report Completed By:	
Earl Morse	Date: 11 January 2018

WORK SAFE

DAILY REPORT

(ATTACH ADDITIONAL SHEETS IF NECESSARY)

CONTRACT NAME:	Kirtland AFB Bulk Fuels Facility Expansion of Dissolved Plume GWTS Design	REPORT NO:	037
CONTRACT NUMBER:	W912DR-12-D-0006	REPORT DATE:	11 JAN 18
REVISION NUMBER:	-	REVISION DATE:	-
TASK ORDER NUMBER:	DM01	PROJECT NAME / LOCATION:	Kirtland BFF
PROJECT NUMBER:	62599DM01	PROJECT DESCRIPTION:	Installation of KAFB-106239 Conveyance Line
PROJECT MANAGER:	Devon Jercinovic	FIELD QUALITY MANAGER:	Keith McKenzie
CONSTRUCTION MANAGER:	Earl Morse	SITE SAFETY MANAGER:	Earl Morse

AM WEATHER:	Clear Cool	PM WEATHER:	Clear Warm	MAX TEMP (F):	50		

SUMMARY OF WORK PERFORMED TODAY

CQM Review of delivered materials.

HEALTH AND SAFETY REPORT

SAFETY ACTIONS TAKEN TODAY/SAFETY INSPECTIONS CONDUCTED (Include Observations, Safety Violations, Corrective Instructions Given, Corrective Actions Taken, and Results of Safety Inspections Conducted:

See Construction Manager's Daily Report

TAILGATE TOPICS:

"

SAFE BEHAVIOR OBSERVATIONS/SELF-ASSESSMENTS:

"

OPERATIONS/PRODUCTION REPORT

WORK FORCE – CONTRACTOR AND SUBCONTRACTOR

Company	Cumulative Total of Work Hours From Previous Report	Total Hours Today	Total Work Hours From Start of Injection Event
See CM's Daily Report			

EQUIPMENT ON HAND

Description of Equipment	Make/Model/ Manufacturer	Equipment ID Number	Inspection Performed By
None			

COMMENTS (acceptance status, inspection findings, etc.):

ok

WORK AND/OR TESTS ACCOMPLISHED OR IN PROGRESS

Performed Work/Test for Today: See CM's Daily Report

Planned Work/Test for Tomorrow: "

Planned Work/Test for Next Week: "

CHANGED CONDITIONS/DELAY/CONFLICTS ENCOUNTERED (List any conflicts with the project [i.e., scope of work and/or drawings], delays to the project attributable to site and weather conditions, etc. "

VISITORS AND DISCUSSIONS: "

QUALITY CONTROL REPORT

MATERIALS DELIVERED TO JOB SITE

Quantity/Volume/ Weight	Description of Materials Received	Make/Model/ Manufacturer	Material Lot Number	Inspection Performed By
1,150 ft	Fiber Optic Cable (12 Strand)	Hitachi 614 Sq.mm	—	KM
1	Prop Splice Enclosure	Coyote FOOS	—	KM

COMMENTS (acceptance status, inspection findings, etc.): OK, meets submittal

INSPECTIONS PERFORMED

Task/Activity Inspected	Inspection Performed	Findings
None		

TESTS PERFORMED

Task/Activity Tested	Test Performed	Test Results (Pass/Fail) - Criteria
None		

QUALITY ISSUES AND RESOLUTIONS: None

SUBMITTALS INSPECTION / REVIEW

Submittal No.	Submittal Description	Specification/Plan Reference	Submittal Approved?		Comment/Reason/Action
NA	Daily Report	–	Yes ☐	No ☐	Pending
NA	SBO	–	Yes ☐	No ☐	Pending
NA	PTSP	–	Yes ☐	No ☐	Pending

REGULATORY COMPLIANCE REPORT							
PERMIT INSPECTIONS PERFORMED: None							
WASTE ACCUMULATION/STOCKPILE AREA INSPECTION							
Inspection Performed By:	NA			Signature of Inspector:			
Accumulation / Stockpile Area Inspected:							
No of Bins:		No of Tankers		No of Roll-Off Boxes:		No. of Tanks	
Inspection Results: None							
GENERAL COMMENTS							
General Comments: (rework, directives, etc.): OK							
ATTACHMENTS							
List of Attachments: (examples, as applicable: submittals, meeting minutes, safety meeting minutes, COCs, weight tickets, manifests, profiles, rework item list, RFIs, DCNs, photographs, etc.): Photo log.							
NOTE: Write all entries legibly in ink. Line out all unused portions or designate as "not applicable". Preparer signs first and last name on each completed daily report. This form may be filled out electronically and signed electronically.				PREPARER'S SIGNATURE		11 JAN 18 DATE	

Location: Station 12+00
Description: Hitachi 12 Strand Fiber Optic Cable
Date: 11 January 2018 Direction: Down

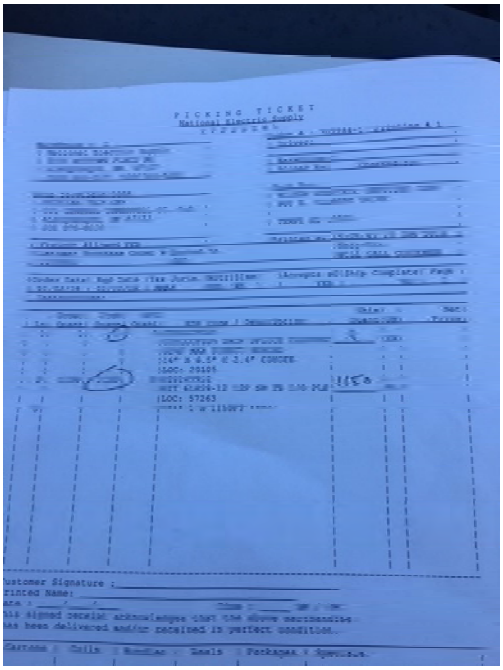

Location: Station 12+00
Description: Delivery Information Form
Date: 11 January 2018 Direction: Down

EA Engineering, Science, and Technology, Inc

106239 Conveyance Line — **Employee/Visitor Register and Safety Brief**

Date: 1-11-2018

Site Entry/Exit		Name (Printed)	Signature	Company
Time In	Time Out			
0650	1300	Earl Morse		EA
0700		Britt Crooks		WILSON
0700		Victor Maldonado		WILSON
7:00		Rogan Skeets		Wilson Electric
700		Roberto Gonzalez		WILSON ELECTRIC SER.
700		Jaime Trevino Perez		wilson elec
700	1215	Michael Pearson		Netsian
7:00	1215	Steven Bumgarner		Netsian
1000	1130 Jose	Jose Olego Ortega		NETSIAN
10:00	1130	David Molinar		Netsian

EA Engineering, Science, and Technology, Inc.

DAILY SAFETY INSPECTION CHECKLIST (TO BE COMPLETED EACH DAY OF CONSTRUCTION OR HTRW SITE ACTIVITIES)

Site: 106239 Conveyance line
Location: 106239 well vault/Electrical Panel
Project No.: 62599DM01
Client: USACE

Prepared by SSHO: Earl Morse
Project Manager: Devan Jorgensen
Date: 1-11-2018

Rating	Y	N	N/A	Comments/Immediate Corrective Action[1]
Accident Prevention Plan (APP) and Site Safety and Health Plan (SSHP) General Requirements				
Are there new onsite personnel? • Did they receive pre-entry briefing and are their names recorded in field logbook or daily log? • Was the USACE PM made aware of the new personnel. • Required training and medical surveillance documentation received (e.g., 40-hr, 8 hr, etc.)?		✓		
Did personnel sign in/out of site?	✓			
Daily tailgate safety meetings conducted and documented?	✓			
Were new activities performed today? Were hazards identified, discussed during the daily safety tailgate, and incorporated into revised APP/SSHP?		✓		
New materials brought on site? MSDSs available?		✓		
Exclusion (EZ), Contamination Reduction (CRZ), and Support Zones (SZ) delineated and enforced?			✓	
General housekeeping measures in place to prevent hazards?	✓			
Emergency Planning				
Were there any changes to emergency contact names, telephone numbers, or hospital? If so, were site personnel made aware and was information distributed/reposted.		✓		
Adequate safety equipment inventory available?	✓			
Fire extinguisher available (monthly inspection of extinguisher will suffice)	✓			
Eyewash station(s) functioning and in place (weekly inspection of eye wash station will suffice)?	✓			
First aid supplies available (weekly inspection of first aid kit will suffice)?	✓			
Communication equipment readily available for emergencies?	✓			
Any reported accidents/incidents at this site? If so, were accident reporting procedures followed?		✓		
Air Monitoring				
Monitoring equipment specified in SSHP available and in working order? Air monitoring instrumentation for this site includes – check each if required/on site, note deficiencies in comments: • Combustible gas meter • Organic vapor analyzer • Contaminant specific analyzer for benzene (if total organic vapor concentrations exceed 0.5 ppm)			✓	
Monitoring equipment calibrated and calibration records			✓	

Y = Satisfactory or Yes; N = Unsatisfactory or No, N/A = Not applicable

Rating	Y	N	N/A	Comments/Immediate Corrective Action[1]
available?				
Environmental and personnel monitoring performed as specified in SSHP?			✓	
PPE				
Proper dermal protection worn by EA and subcontracted employees when handling/ contacting hazardous chemicals or contaminated environmental media?	✓			
Required PPE (hard hats, safety boots / shoes, eye protection with side shields, hearing protection) being worn by EA and subcontracted employees?	✓			
PPE inspection completed by SSHO?	✓			
Drill Rig Operations				
Daily rig inspection completed? Any equipment problems?			✓	
Drill rigs/elevated equipment maintaining minimum 10-ft distance from energized (50 kV) overhead power lines?			✓	
Investigation-derived Waste (IDW)				
Wastes properly staged, secured, and labeled at end of day?	✓			

Additional Comments:

Site Safety and Health Officer's Signature

1-11-2018

Date

[1]If a deficiency is noted that cannot be immediately corrected, the SSHO will monitor the progress in correcting the deficiency and will document following:

- Date the deficiency was identified
- Description of the deficiency
- Name of the person responsible for correcting the deficiency
- Projected date of correction
- Actual date of correction.

EA ENGINEERING, SCIENCE AND TECHNOLOGY, INC.
SAFETY MEETING REPORT

Date: 1-11-2018	**Time:** 0650	**Duration of meeting:** 5 mn	**Project #** 62599.0101
Location: 06239 well vault/electrical Panel		**Task:** Fiber optics install (electrical labeling	

Type of meeting: X **Daily** ___ **Weekly** ___ **Monthly** ___ **Other:** _____

Items/Issues discussed:

1. Weather: windy cold - cold stress
2. Hearing Protection.
3.
4.
5.

Attach minutes of safety meeting if taken.

Safety questions/issues raised:	**Actions/Follow-up needed:**
1. None	
2.	
3.	
4.	
5.	
6.	

Remarks: None

Meeting conducted by:
Earl Morse

HEALTH AND SAFETY ACTIVITY REPORT

Site: 106239 Conveyance Line Location: Ridgecrest Vault

Weather Cond.: _____ Onsite Hours: From 0650 To 1300

Changes in PPE Levels[1]	Work Operations	Reasons for Change
None		

Site Safety and Health Plan Violations	Corrective Action Specified	Corrective Action Taken [2](yes/no)
None		

Observations and Comments:

None

Completed by: _____ Date: 1-11-2018

Site Health and Safety Supervisor

[1]Only SSHO may change PPE levels, using only criteria specified in APP/SSHP.

[2]If a deficiency is noted that cannot be immediately corrected, the SSHO will monitor the progress in correcting the deficiency and will document following:

- Date the deficiency was identified
- Description of the deficiency
- Name of the person responsible for correcting the deficiency
- Projected date of correction
- Actual date of correction.

From:	McKeage, Kevin
To:	Trent Simpler; Mark Phaneuf; Amy Sanchez; Carlos Salazar; "Dreeland, Linda SPA"
Cc:	Jercinovic, Devon; Curley, Tyler; Morse, Earl; Bowman, Matthew; Ferrari, Peter
Subject:	Activity Report for KAFB-106239 Conveyance Line Installation 12 January 2018
Date:	Friday, January 12, 2018 6:20:31 PM
Attachments:	Photos 1-12-18.pdf Daily Field Activities Summary Report.pdf

---

Issues Today 12 Friday January 2018:

- Netsian was unable to obtain positive continuity tests on several of the fiber optic strands. This is likely indicative of an issue with the testing equipment, but several of the strands may still be damaged.

Resolution of Issues:

- Netsian will bring a second testing unit and retest all of the fiber optic strands on Monday to determine the cause of the failed continuity tests.

Work Performed Today:

- Completed fiber optic splice at Sta 12+00 vault.
- Performed initial continuity test of the fiber optic line.
- Continued site cleanup and demobilization.

Installation Completion to Date: 95%

Work Planned for 15 Monday January 2018:

- Complete testing of the fiber optic cable
- Continue with site cleanup

Please let me know if you need additional information.

Kevin McKeage
Engineer I

Cell: (316) 765-1486
Direct Dial: (505) 933-6417
Office: (505) 224-9013 Ext. 1517
Fax: (505) 224-9016
kmckeage@eaest.com

EA Engineering, Science, and Technology, Inc., PBC
320 Gold Ave, Suite. 1300
Albuquerque, NM 87102
www.eaest.com

DAILY FIELD ACTIVITIES SUMMARY REPORT		
PROJECT NAME: KAFB Well 106239 Conveyance Line Installation		
Date: 1-12-18	Time Shift Beginning: 0700	Time Shift Ending: 1600
Project Number: 62599DM01		Contract/Task Order No.:
Client: USACE		Report By: Kevin McKeage
Contractor(s): Wilson Electric/Netsian		Project Manager: Devon Jercinovic
Design Manager:		Oversight Manager: Kevin McKeage
Design Engineer: George Nemeth		Site Engineer: Tyler Curley
Weather: Sunny 54° F		Logbook Number: NA
Personnel Onsite:	**Name:**	**Reason for Being Onsite:**
EA	Kevin McKeage	Safety Oversight
Wilson Electric/Netsian	Britt Crooks Jaime Perez Rogan Skeets Victor Maldonado Roberto Gurrola Michael Pearson Steven Benjamin Matthew Hall-Lopez	Electrical Contractor
Work Performed:		

Planned Activities:

- Complete fiber optic splice at Sta 12+00 vault.
- Perform tests on the fiber optic line.
- Continue site cleanup and demobilization.

Completed Activities:

- Completed fiber optic splice at Sta 12+00 vault.
- Performed initial continuity test on the fiber optic line.
- Continued site cleanup and demobilization.

Material Deliveries:

None

Construction Quality Control Activities or Samples Collected:

- None

Observations or Possible Variations from Specifications:

- None

Anticipated Activities for the Following Day:	
• Retest continuity of the fiber optic strands. **Planned Material Deliveries:** • None	
Contractor Reports, Manifests, Documents Reviewed and Logged:	
• None	
Report Completed By:	
Kevin McKeage	Date: 12 January 2018

Location: Station 12+00
Description: Fiber Optic Splicing
Date: 12 January 2018 Direction: Southeast

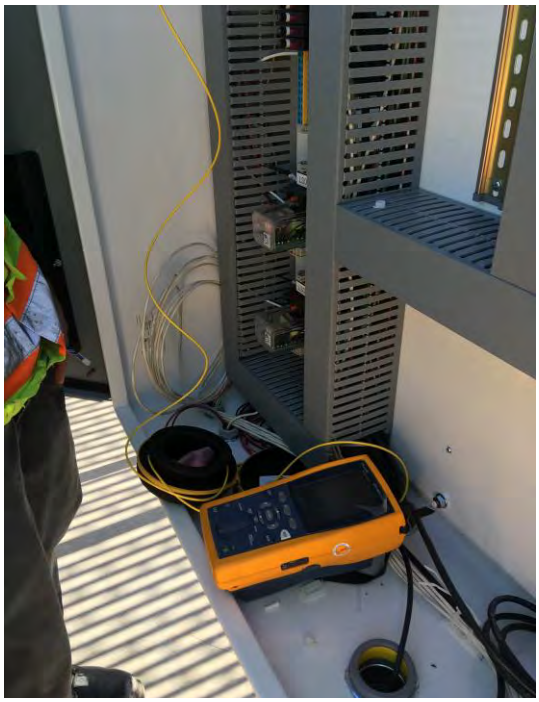

Location: KAFB-106239 Electrical Pad
Description: Fiber Optic Continuity Testing
Date: 12 January 2018 Direction: Southeast

EA Engineering, Science, and Technology, Inc

Employee/Visitor Register and Safety Brief

Date: 01/12/18

Site Entry/Exit		Name (Printed)	Signature	Company
Time In	Time Out			
0700		Victor Maldonado		WILSON
0700		Rogan Sheets		Wilson Electric
0700		ROBERTO GURROLA		WILSON
8700		Britt CROOKS	BC	WILSON
0700		Jaime Trevino Perez		wilson
0700		Kevin McKenzie		EA
0700		Michael Pearson		Netsian
0700		Steven Benjamin		Netsian
11:48		Matthew Hall-Lopez	Hall-Lopez	Netsian

EA Engineering, Science, and Technology, Inc.

DAILY SAFETY INSPECTION CHECKLIST (TO BE COMPLETED EACH DAY OF CONSTRUCTION OR HTRW SITE ACTIVITIES)

Site: 106239 Conveyance Line
Location: Station 12+00, Wellhead, GWTS
Project No.: 62579.01.01
Client: USACE

Prepared by SSHO: Kevin McKeance
Project Manager: Devon Jarcinovic
Date: 01/12/18

Rating	Y	N	N/A	Comments/Immediate Corrective Action[1]
Accident Prevention Plan (APP) and Site Safety and Health Plan (SSHP) General Requirements				
Are there new onsite personnel? • Did they receive pre-entry briefing and are their names recorded in field logbook or daily log? • Was the USACE PM made aware of the new personnel. • Required training and medical surveillance documentation received (e.g., 40-hr, 8 hr, etc.)?		✓		
Did personnel sign in/out of site?	✓			
Daily tailgate safety meetings conducted and documented?	✓			
Were new activities performed today? Were hazards identified, discussed during the daily safety tailgate, and incorporated into revised APP/SSHP?	✓			
New materials brought on site? MSDSs available?		✓		
Exclusion (EZ), Contamination Reduction (CRZ), and Support Zones (SZ) delineated and enforced?			✓	
General housekeeping measures in place to prevent hazards?	✓			
Emergency Planning				
Were there any changes to emergency contact names, telephone numbers, or hospital? If so, were site personnel made aware and was information distributed/reposted.		✓		
Adequate safety equipment inventory available?	✓			
Fire extinguisher available (monthly inspection of extinguisher will suffice)	✓			
Eyewash station(s) functioning and in place (weekly inspection of eye wash station will suffice)?	✓			
First aid supplies available (weekly inspection of first aid kit will suffice)?	✓			
Communication equipment readily available for emergencies?	✓			
Any reported accidents/incidents at this site? If so, were accident reporting procedures followed?		✓		
Air Monitoring				
Monitoring equipment specified in SSHP available and in working order? Air monitoring instrumentation for this site includes – check each if required/on site, note deficiencies in comments: • Combustible gas meter • Organic vapor analyzer • Contaminant specific analyzer for benzene (if total organic vapor concentrations exceed 0.5 ppm)			✓	
Monitoring equipment calibrated and calibration records			✓	

Y = Satisfactory or Yes; N = Unsatisfactory or No, N/A = Not applicable

Rating	Y	N	N/A	Comments/Immediate Corrective Action[1]
available?				
Environmental and personnel monitoring performed as specified in SSHP?			✓	
PPE				
Proper dermal protection worn by EA and subcontracted employees when handling/ contacting hazardous chemicals or contaminated environmental media?	✓			
Required PPE (hard hats, safety boots / shoes, eye protection with side shields, hearing protection) being worn by EA and subcontracted employees?	✓			
PPE inspection completed by SSHO?	✓			
Drill Rig Operations				
Daily rig inspection completed? Any equipment problems?			✓	
Drill rigs/elevated equipment maintaining minimum 10-ft distance from energized (50 kV) overhead power lines?			✓	
Investigation-derived Waste (IDW)				
Wastes properly staged, secured, and labeled at end of day?	✓			

Additional Comments:

Site Safety and Health Officer's Signature

01/12/18
Date

[1]If a deficiency is noted that cannot be immediately corrected, the SSHO will monitor the progress in correcting the deficiency and will document following:

- Date the deficiency was identified
- Description of the deficiency
- Name of the person responsible for correcting the deficiency
- Projected date of correction
- Actual date of correction.

EA ENGINEERING, SCIENCE AND TECHNOLOGY, INC.
SAFETY MEETING REPORT

Date: 9/12/18	**Time:** 0705	**Duration of meeting:** 5 min	**Project #** 62599.0701
Location: GWTS		**Task:** Fiber Optic Splice/Testing	

Type of meeting: X **Daily** ___ **Weekly** ___ **Monthly** ___ **Other:** _____

Items/Issues discussed:

1. Hand tool use
2. Vault opening
3.
4.
5.

Attach minutes of safety meeting if taken.

Safety questions/issues raised:	**Actions/Follow-up needed:**
1. None	
2.	
3.	
4.	
5.	
6.	

Remarks: None

Meeting conducted by: Kevin McKeage

HEALTH AND SAFETY ACTIVITY REPORT

Site: 106239 Conveyance Line Location: Rifscrat Vault, GWTS, Wellhead

Weather Cond.: Clear Onsite Hours: From 0700 To 1600

Changes in PPE Levels[1]	Work Operations	Reasons for Change
None		

Site Safety and Health Plan Violations	Corrective Action Specified	Corrective Action Taken [2](yes/no)
None		

Observations and Comments:
None

Completed by: Kevin V. Kruse Date: 01/12/18
Site Health and Safety Supervisor

[1]Only SSHO may change PPE levels, using only criteria specified in APP/SSHP.
[2]If a deficiency is noted that cannot be immediately corrected, the SSHO will monitor the progress in correcting the deficiency and will document following:

- Date the deficiency was identified
- Description of the deficiency
- Name of the person responsible for correcting the deficiency
- Projected date of correction
- Actual date of correction.

From:	Curley, Tyler
To:	"Trent.Simpler@usace.army.mil"; "Amy.E.Sanchez@usace.army.mil"; "Carlos.F.Salazar@usace.army.mil"; "Linda.Dreeland@usace.army.mil"; "Mark.J.Phaneuf@usace.army.mil"
Cc:	Jercinovic, Devon; McKeage, Kevin; Morse, Earl; Bowman, Matthew
Subject:	Activity Report for KAFB Well 106239 Conveyance Line Installation 15 January 2018
Date:	Monday, January 15, 2018 8:28:31 PM
Attachments:	Daily Field Activities Summary Report.pdf

Issues Today 15 Monday January 2018:

- The fiber optic cable was retested and it was determined that there is a break in the fiber cable at approximately Sta 13+00 within the conduit.

Resolution of Issues:

- As a result, the fiber cable between the pull box located at Sta 12+08 and the GWTS building will have to be replaced.

Work Performed Today:

- Retested the fiber optic cable for continuity

Installation Completion to Date: 95%

Work Planned for the following days:

- Wednesday
  - Delivery of the fiber cable
- Thursday/Friday
  - Installation and splicing of the fiber cable
- Friday
  - Testing of the fiber optic cable

Tyler Curley, P.E.
EA Engineering, Science, and Technology, Inc., PBC
320 Gold Avenue, SW Suite 1300
Albuquerque, NM 87120
(505) 715-4422 work
(719) 688-9558 cell
tcurley@eaest.com

DAILY FIELD ACTIVITIES SUMMARY REPORT		
PROJECT NAME: KAFB Well 106239 Conveyance Line Installation		
Date: 1-15-18	Time Shift Beginning: 0700	Time Shift Ending: 1200
Project Number: 62599DM01		Contract/Task Order No.:
Client: USACE		Report By: Tyler Curley
Contractor(s): Wilson Electric		Project Manager: Devon Jercinovic
Design Manager:		Oversight Manager: Earl Morse
Design Engineer: George Nemeth		Site Engineer: Tyler Curley
Weather: Sunny 54° F		Logbook Number: NA
Personnel Onsite:	**Name:**	**Reason for Being Onsite:**
EA	Kevin McKeage	Construction/Safety Oversight
Wilson Electric	Britt Crooks Jaime Perez Michael Pearson Steven Benjamin Matthew Hall-Lopez	Electrical Contractor

Work Performed:

Planned Activities:

- Retest continuity of the fiber optic cable

Completed Activities:

- Retested the continuity of the fiber optic cable

Material Deliveries:

- None

Construction Quality Control Activities or Samples Collected:

- None

Observations or Possible Variations from Specifications:

- The fiber optic cable was retested and it was determined that a break in the fiber cable was discovered at approximately Sta 13+00 within the conduit. As a result, the fiber cable between the pull box located at Sta 12+08 and the GWTS building will have to be replaced.

Anticipated Activities for the Following Day:

- Wednesday
  - Delivery of the fiber cable
- Thursday/Friday
  - Installation and splicing of the fiber cable

Planned Material Deliveries:

- None

Contractor Reports, Manifests, Documents Reviewed and Logged:	
• None	
Report Completed By:	
Tyler Curley	Date: 15 January 2018

EA Engineering, Science, and Technology, Inc

Employee/Visitor Register and Safety Brief				
Date: 01/15/18				
Site Entry/Exit		Name (Printed)	Signature	Company
Time In	Time Out			
0630	1200	Kevin McKeague		EA
0630	0830	Matthew Hall-Lopez		Artisan
6:30	0830	Steven Benjamin		Wetstone
706	0900	Britt Crooks		Wilson
700	0900	Jaime Trevino Perez		enviroad

EA Engineering, Science, and Technology, Inc.

DAILY SAFETY INSPECTION CHECKLIST
(TO BE COMPLETED EACH DAY OF CONSTRUCTION OR HTRW SITE ACTIVITIES)

Site: 106239 Conveyance Line
Location: Electrical Pad.
Project No.: 62599 Ph01
Client: USACE

Prepared by SSHO: Kevin McKenzie
Project Manager: Devon Jercinovic
Date: 01/15/18

Rating	Y	N	N/A	Comments/Immediate Corrective Action[1]
Accident Prevention Plan (APP) and Site Safety and Health Plan (SSHP) General Requirements				
Are there new onsite personnel? • Did they receive pre-entry briefing and are their names recorded in field logbook or daily log? • Was the USACE PM made aware of the new personnel. • Required training and medical surveillance documentation received (e.g., 40-hr, 8 hr, etc.)?		✓		
Did personnel sign in/out of site?	✓			
Daily tailgate safety meetings conducted and documented?	✓			
Were new activities performed today? Were hazards identified, discussed during the daily safety tailgate, and incorporated into revised APP/SSHP?	✓			
New materials brought on site? MSDSs available?		✓		
Exclusion (EZ), Contamination Reduction (CRZ), and Support Zones (SZ) delineated and enforced?			✓	
General housekeeping measures in place to prevent hazards?	✓			
Emergency Planning				
Were there any changes to emergency contact names, telephone numbers, or hospital? If so, were site personnel made aware and was information distributed/reposted.		✓		
Adequate safety equipment inventory available?	✓			
Fire extinguisher available (monthly inspection of extinguisher will suffice)	✓			
Eyewash station(s) functioning and in place (weekly inspection of eye wash station will suffice)?	✓			
First aid supplies available (weekly inspection of first aid kit will suffice)?	✓			
Communication equipment readily available for emergencies?	✓			
Any reported accidents/incidents at this site? If so, were accident reporting procedures followed?		✓		
Air Monitoring				
Monitoring equipment specified in SSHP available and in working order? Air monitoring instrumentation for this site includes – check each if required/on site, note deficiencies in comments: • Combustible gas meter • Organic vapor analyzer • Contaminant specific analyzer for benzene (if total organic vapor concentrations exceed 0.5 ppm)			✓	
Monitoring equipment calibrated and calibration records			✓	

Y = Satisfactory or Yes; N = Unsatisfactory or No, N/A = Not applicable

Rating	Y	N	N/A	Comments/Immediate Corrective Action[1]
available?				
Environmental and personnel monitoring performed as specified in SSHP?			✓	
PPE				
Proper dermal protection worn by EA and subcontracted employees when handling/ contacting hazardous chemicals or contaminated environmental media?	✓			
Required PPE (hard hats, safety boots / shoes, eye protection with side shields, hearing protection) being worn by EA and subcontracted employees?	✓			
PPE inspection completed by SSHO?	✓			
Drill Rig Operations				
Daily rig inspection completed? Any equipment problems?			✓	
Drill rigs/elevated equipment maintaining minimum 10-ft distance from energized (50 kV) overhead power lines?			✓	
Investigation-derived Waste (IDW)				
Wastes properly staged, secured, and labeled at end of day?	✓			

Additional Comments:

Site Safety and Health Officer's Signature

01/15/18

Date

[1]If a deficiency is noted that cannot be immediately corrected, the SSHO will monitor the progress in correcting the deficiency and will document following:

- Date the deficiency was identified
- Description of the deficiency
- Name of the person responsible for correcting the deficiency
- Projected date of correction
- Actual date of correction.

HEALTH AND SAFETY ACTIVITY REPORT

Site: 106239 Conveyance Line Location: Electrical Pad

Weather Cond.: Clear Onsite Hours: From 0630 To 0900

Changes in PPE Levels[1]	Work Operations	Reasons for Change
None		

Site Safety and Health Plan Violations	Corrective Action Specified	Corrective Action Taken [2](yes/no)
None		

Observations and Comments:

None

Completed by: Kevin McKenzie Date: 01/15/18
Site Health and Safety Supervisor

[1]Only SSHO may change PPE levels, using only criteria specified in APP/SSHP.
[2]If a deficiency is noted that cannot be immediately corrected, the SSHO will monitor the progress in correcting the deficiency and will document following:

- Date the deficiency was identified
- Description of the deficiency
- Name of the person responsible for correcting the deficiency
- Projected date of correction
- Actual date of correction.

EA ENGINEERING, SCIENCE AND TECHNOLOGY, INC.
SAFETY MEETING REPORT

Date: 01/15/18	**Time:** 0630	**Duration of meeting:** 5	**Project #** 62599[illegible]
Location: Electrical Pad		**Task:** Fiber Optic Testing	

Type of meeting: X Daily ___Weekly ___ Monthly ___ Other:_____

Items/Issues discussed:

1. Hard tool Use
2. Pinch Points
3.
4.
5.

Attach minutes of safety meeting if taken.

Safety questions/issues raised:	**Actions/Follow-up needed:**
1. None	
2.	
3.	
4.	
5.	
6.	

Remarks: None

Meeting conducted by:
Kevin McKeage

From:	McKeage, Kevin
To:	Trent Simpler; Mark Phaneuf; Amy Sanchez; Carlos Salazar; "Dreeland, Linda SPA"
Cc:	Jercinovic, Devon; Curley, Tyler; Morse, Earl; Bowman, Matthew; Ferrari, Peter
Subject:	Activity Report for KAFB-106239 Conveyance Line Installation 16 January 2018
Date:	Tuesday, January 16, 2018 6:35:58 PM
Attachments:	Daily Field Activities Summary Report 01-16-17.pdf 038 CQM Daily Report 16JAN18.pdf Photos 1-16-18.pdf

---

Issues Today 16 Tuesday January 2018:

- None

Resolution of Issues:

- None

Work Performed Today:

- Installed VFD Air Conditioner
- Installed Fiber Optic to Ethernet Adapters
- In conjunction with today's surveying efforts, KAFB-106239 critical vault measurements were surveyed.

Installation Completion to Date: 95%

Work Planned for 17 Wednesday January 2018:

- Install Wellhead ARV
- The electrical outage and connection of high voltage conductors has been rescheduled from Wednesday 17 to Monday 22 January 2018. This change occurred to ensure the safety of fiber optic personnel working in the electrical pull boxes on Thursday and Friday this week.

Please let me know if you need additional information.

Kevin McKeage
Engineer I

Cell: (316) 765-1486
Direct Dial: (505) 933-6417
Office: (505) 224-9013 Ext. 1517
Fax: (505) 224-9016
kmckeage@eaest.com

EA Engineering, Science, and Technology, Inc., PBC
320 Gold Ave, Suite. 1300
Albuquerque, NM 87102
www.eaest.com

DAILY FIELD ACTIVITIES SUMMARY REPORT		
PROJECT NAME: KAFB Well 106239 Conveyance Line Installation		
Date: 01-16-18	Time Shift Beginning: 0845	Time Shift Ending: 1130
Project Number: 62599DM01		Contract/Task Order No.:
Client: USACE		Report By: Kevin McKeage
Contractor(s): I&C Solutions		Project Manager: Devon Jercinovic
Design Manager:		Oversight Manager: Kevin McKeage
Design Engineer: George Nemeth		Site Engineer: Tyler Curley
Weather: Sunny 40° F		Logbook Number: NA
Personnel Onsite:	**Name:**	**Reason for Being Onsite:**
EA	Kevin McKeage	Safety Oversight
I&C Solutions	Fred Tillies James Jackson	Controls Contractor
Work Performed:		

Planned Activities:

- Install VFD Air Conditioner
- Install Fiber Optic to Ethernet Adaptors

Completed Activities:

- Installed VFD Air Conditioner
- Installed Fiber Optic to Ethernet Adaptors

Material Deliveries:

VFD Air Conditioner and Ethernet Adaptors

Construction Quality Control Activities or Samples Collected:

- Materials Inspection

Observations or Possible Variations from Specifications:

- None

Anticipated Activities for the Following Day:

- Install KAFB-106239 wellhead ARV.

Planned Material Deliveries:

- Delivery of ARV and replacement fiber optic cable.

Contractor Reports, Manifests, Documents Reviewed and Logged:

- None

Report Completed By:	
Kevin McKeage	Date: 16 January 2018

Location: KAFB-106239 Electrical Pad
Description: VFD Air Conditioner
Date: 16 January 2018 Direction: West

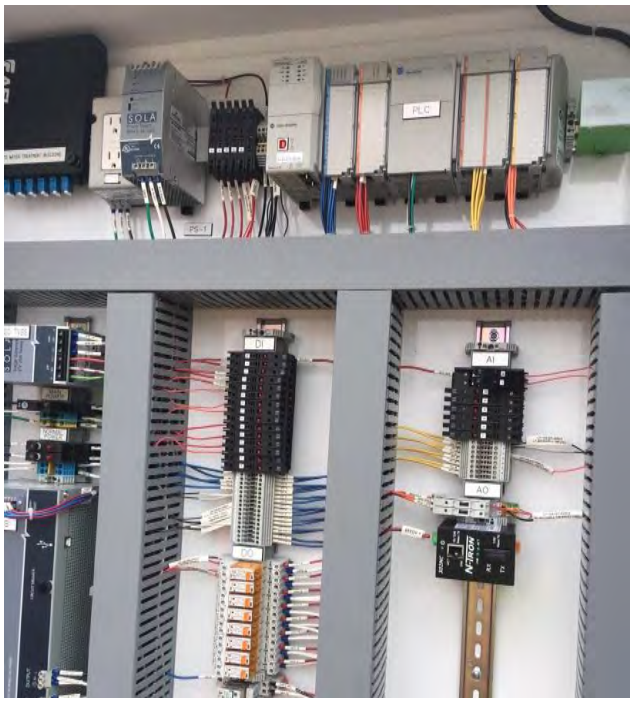

Location: KAFB-106239 Electrical Pad
Description: Fiber Optic Adaptor
Date: 16 January 2018 Direction: South

DAILY REPORT

(ATTACH ADDITIONAL SHEETS IF NECESSARY)

CONTRACT NAME:	Kirtland AFB Bulk Fuels Facility Expansion of Dissolved Plume GWTS Design	REPORT NO:	038
CONTRACT NUMBER:	W912DR-12-D-0006	REPORT DATE:	16 JAN 18
REVISION NUMBER:	-	REVISION DATE:	-
TASK ORDER NUMBER:	DM01	PROJECT NAME / LOCATION:	Kirtland BFF
PROJECT NUMBER:	62599DM01	PROJECT DESCRIPTION:	Installation of KAFB-106239 Conveyance Line
PROJECT MANAGER:	Devon Jercinovic	FIELD QUALITY MANAGER:	Kevin McKeage
CONSTRUCTION MANAGER:	Tyler Conley	SITE SAFETY MANAGER:	Kevin McKeage

AM WEATHER:	Cool Cloudy	PM WEATHER:	Cool Partly cloudy	MAX TEMP (F):	40		

SUMMARY OF WORK PERFORMED TODAY

Materials Inspection.

HEALTH AND SAFETY REPORT

SAFETY ACTIONS TAKEN TODAY/SAFETY INSPECTIONS CONDUCTED (Include Observations, Safety Violations, Corrective Instructions Given, Corrective Actions Taken, and Results of Safety Inspections Conducted:

See CM's Daily Report

TAILGATE TOPICS:

"

SAFE BEHAVIOR OBSERVATIONS/SELF-ASSESSMENTS:

"

OPERATIONS/PRODUCTION REPORT

WORK FORCE – CONTRACTOR AND SUBCONTRACTOR

Company	Cumulative Total of Work Hours From Previous Report	Total Hours Today	Total Work Hours From Start of Injection Event
See CM's Daily Report			

EQUIPMENT ON HAND

Description of Equipment	Make/Model/ Manufacturer	Equipment ID Number	Inspection Performed By
None			

COMMENTS (acceptance status, inspection findings, etc.):

OK

WORK AND/OR TESTS ACCOMPLISHED OR IN PROGRESS

Performed Work/Test for Today: See CM's Daily Report

Planned Work/Test for Tomorrow: "

Planned Work/Test for Next Week: "

CHANGED CONDITIONS/DELAY/CONFLICTS ENCOUNTERED (List any conflicts with the project [i.e., scope of work and/or drawings], delays to the project attributable to site and weather conditions, etc. "

VISITORS AND DISCUSSIONS: "

QUALITY CONTROL REPORT

MATERIALS DELIVERED TO JOB SITE

Quantity/Volume/ Weight	Description of Materials Received	Make/Model/ Manufacturer	Material Lot Number	Inspection Performed By
1	VFP AC	ThermalEdge	—	KM
2	Fiber optic to Ethernet	302PE NTron	—	KM

COMMENTS (acceptance status, inspection findings, etc.): OK

INSPECTIONS PERFORMED

Task/Activity Inspected	Inspection Performed	Findings
AC Install	Visual	OK
Adapter Install	Visual	OK

TESTS PERFORMED

Task/Activity Tested	Test Performed	Test Results (Pass/Fail) - Criteria
None		

QUALITY ISSUES AND RESOLUTIONS: None

SUBMITTALS INSPECTION / REVIEW

Submittal No.	Submittal Description	Specification/Plan Reference	Submittal Approved?		Comment/Reason/Action
NA	Daily Report	-	Yes ☐	No ☐	Pending
NA	SBO	-	Yes ☐	No ☐	Pending
NA	PTSP	-	Yes ☐	No ☐	Pending

REGULATORY COMPLIANCE REPORT							
PERMIT INSPECTIONS PERFORMED: None							
WASTE ACCUMULATION/STOCKPILE AREA INSPECTION							
Inspection Performed By:	NA			Signature of Inspector:			
Accumulation / Stockpile Area Inspected:							
No of Bins:		No of Tankers		No of Roll-Off Boxes:		No. of Tanks	
Inspection Results: NA							
GENERAL COMMENTS							
General Comments: (rework, directives, etc.): OK							
ATTACHMENTS							
List of Attachments: (examples, as applicable: submittals, meeting minutes, safety meeting minutes, COCs, weight tickets, manifests, profiles, rework item list, RFIs, DCNs, photographs, etc.): Photo log							
NOTE: Write all entries legibly in ink. Line out all unused portions or designate as "not applicable". Preparer signs first and last name on each completed daily report. This form may be filled out electronically and signed electronically.				PREPARER'S SIGNATURE		DATE: 16 JAN 18	

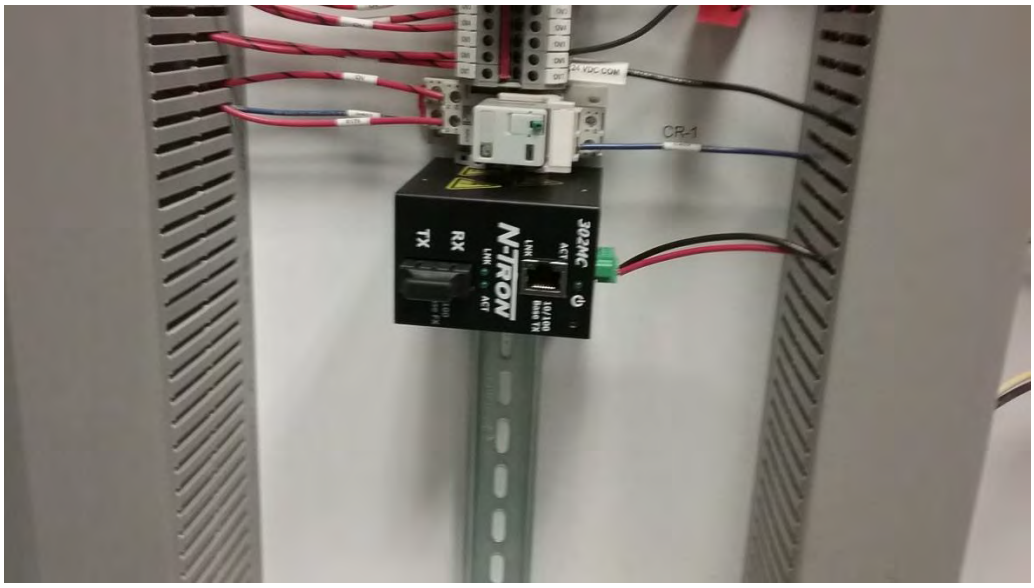

Location: GWTS
Description: Fiber Optic to Ethernet Adaptor
Date: 16 January 2018 Direction: South

Location: KAFB-106239 Electrical Pad
Description: VFD Air Conditioner Manual
Date: 16 January 2018 Direction: Down

01/16/18

EA Sign In.

Name	Time in	Affiliation	Time Out	Signature
Kevin McKenzie	0845	EA	11:30	
Fred Tillman	8:49	ICS	11:30	
James Jackson	8:44	ICS	11:30	

National® Brand
42-381 50 SHEETS EYE-EASE® - 5 SQUARES
42-382 100 SHEETS EYE-EASE® - 5 SQUARES
42-389 200 SHEETS EYE-EASE® - 5 SQUARES

EA Engineering, Science, and Technology, Inc.

DAILY SAFETY INSPECTION CHECKLIST (TO BE COMPLETED EACH DAY OF CONSTRUCTION OR HTRW SITE ACTIVITIES)

Site: 106239 Conveyance Line
Location: Electrical Pad
Project No.: 62540DM01
Client: USACE

Prepared by SSHO: Kevin McKaye
Project Manager: Devon Jerebowic
Date: 01/16/18

Rating	Y	N	N/A	Comments/Immediate Corrective Action[1]
Accident Prevention Plan (APP) and Site Safety and Health Plan (SSHP) General Requirements				
Are there new onsite personnel? • Did they receive pre-entry briefing and are their names recorded in field logbook or daily log? • Was the USACE PM made aware of the new personnel. • Required training and medical surveillance documentation received (e.g., 40-hr, 8 hr, etc.)?		✓		
Did personnel sign in/out of site?	✓			
Daily tailgate safety meetings conducted and documented?	✓			
Were new activities performed today? Were hazards identified, discussed during the daily safety tailgate, and incorporated into revised APP/SSHP?	✓			
New materials brought on site? MSDSs available?	✓			
Exclusion (EZ), Contamination Reduction (CRZ), and Support Zones (SZ) delineated and enforced?			✓	
General housekeeping measures in place to prevent hazards?	✓			
Emergency Planning				
Were there any changes to emergency contact names, telephone numbers, or hospital? If so, were site personnel made aware and was information distributed/reposted.		✓		
Adequate safety equipment inventory available?	✓			
Fire extinguisher available (monthly inspection of extinguisher will suffice)	✓			
Eyewash station(s) functioning and in place (weekly inspection of eye wash station will suffice)?	✓			
First aid supplies available (weekly inspection of first aid kit will suffice)?	✓			
Communication equipment readily available for emergencies?	✓			
Any reported accidents/incidents at this site? If so, were accident reporting procedures followed?		✓		
Air Monitoring				
Monitoring equipment specified in SSHP available and in working order? Air monitoring instrumentation for this site includes – check each if required/on site, note deficiencies in comments: • Combustible gas meter • Organic vapor analyzer • Contaminant specific analyzer for benzene (if total organic vapor concentrations exceed 0.5 ppm)			✓	
Monitoring equipment calibrated and calibration records			✓	

Y = Satisfactory or Yes; N = Unsatisfactory or No, N/A = Not applicable

Rating	Y	N	N/A	Comments/Immediate Corrective Action[1]
available?			✓	
Environmental and personnel monitoring performed as specified in SSHP?			✓	
PPE				
Proper dermal protection worn by EA and subcontracted employees when handling/ contacting hazardous chemicals or contaminated environmental media?	✓			
Required PPE (hard hats, safety boots / shoes, eye protection with side shields, hearing protection) being worn by EA and subcontracted employees?	✓			
PPE inspection completed by SSHO?	✓			
Drill Rig Operations				
Daily rig inspection completed? Any equipment problems?			✓	
Drill rigs/elevated equipment maintaining minimum 10-ft distance from energized (50 kV) overhead power lines?			✓	
Investigation-derived Waste (IDW)				
Wastes properly staged, secured, and labeled at end of day?	✓			

Additional Comments:

Site Safety and Health Officer's Signature

01/16/18

Date

[1]If a deficiency is noted that cannot be immediately corrected, the SSHO will monitor the progress in correcting the deficiency and will document following:

- Date the deficiency was identified
- Description of the deficiency
- Name of the person responsible for correcting the deficiency
- Projected date of correction
- Actual date of correction.

HEALTH AND SAFETY ACTIVITY REPORT

Site: PG239 Conveyance Line Location: Electrical Pad

Weather Cond.: Cloudy, Cold Onsite Hours: From 0845 To 1130

Changes in PPE Levels[1]	Work Operations	Reasons for Change
None		

Site Safety and Health Plan Violations	Corrective Action Specified	Corrective Action Taken [2](yes/no)
None		

Observations and Comments:

None

Completed by: _____ Date: 01/16/18

Site Health and Safety Supervisor

[1]Only SSHO may change PPE levels, using only criteria specified in APP/SSHP.

[2]If a deficiency is noted that cannot be immediately corrected, the SSHO will monitor the progress in correcting the deficiency and will document following:

- Date the deficiency was identified
- Description of the deficiency
- Name of the person responsible for correcting the deficiency
- Projected date of correction
- Actual date of correction.

EA ENGINEERING, SCIENCE AND TECHNOLOGY, INC.
SAFETY MEETING REPORT

Date: 01/16/18	**Time:** 0850	**Duration of meeting:** 5	**Project #** 62599.03.01
Location: Electrical Pad		**Task:** Install VFD AC + Fiber Optic Adaptors.	

Type of meeting: X **Daily** ___ **Weekly** ___ **Monthly** ___ **Other:** _____

Items/Issues discussed:

1. Hand tool use
2. Pinch points
3. Cold safety
4.
5.

Attach minutes of safety meeting if taken.

Safety questions/issues raised:	Actions/Follow-up needed:
1. None	
2.	
3.	
4.	
5.	
6.	

Remarks:

None

Meeting conducted by: Kim McKay

From:	McKeage, Kevin
To:	Trent Simpler; Mark Phaneuf; Amy Sanchez; Carlos Salazar; "Dreeland, Linda SPA"
Cc:	Jercinovic, Devon; Curley, Tyler; Morse, Earl; Bowman, Matthew; Ferrari, Peter
Subject:	Activity Report for KAFB-106239 Conveyance Line Installation 17 January 2018
Date:	Wednesday, January 17, 2018 4:32:00 PM
Attachments:	Daily Field Activities Summary Report 01-17-18.pdf 039 COM Daily Report 17JAN18.pdf Photos 01-17-18.pdf

---

Issues Today 17 Wednesday January 2018:

- None

Resolution of Issues:

- None

Work Performed Today:

- Installed ARV and manual pressure gauge

Installation Completion to Date: 95%

Work Planned for 18 Thursday January 2018:

- Install Fiber Optic Cable

Please let me know if you need additional information.

Kevin McKeage
Engineer I

Cell: (316) 765-1486
Direct Dial: (505) 933-6417
Office: (505) 224-9013 Ext. 1517
Fax: (505) 224-9016
kmckeage@eaest.com

EA Engineering, Science, and Technology, Inc., PBC
320 Gold Ave, Suite. 1300
Albuquerque, NM 87102
www.eaest.com

DAILY FIELD ACTIVITIES SUMMARY REPORT		
PROJECT NAME: KAFB Well 106239 Conveyance Line Installation		
Date and Day: 01-17-18	Time Shift Beginning: 0700	Time Shift Ending: 0720
Project Number: 62599DM01		Contract/Task Order No.:
Client: USACE		Report By: Kevin McKeage
Contractor(s): Rupert Plumbing		Project Manager: Devon Jercinovic
Design Manager:		Oversight Manager: Kevin McKeage
Design Engineer: George Nemeth		Site Engineer: Tyler Curley
Weather: Clear, Cold 46°F		Logbook Number: NA
Personnel Onsite	**Name**	**Reason for Being Onsite**
EA:	Kevin McKeage	Safety Oversight
Rupert Plumbing	Elias Gallegos Mike Clifcorn	Plumbing Contractor

Work Performed

Planned Activities:

- Install ARV and manual pressure gauge

Completed Activities:

- Installed ARV and manual pressure gauge

Material Deliveries:

- ARV and manual pressure gauge

Construction Quality Control Activities or Samples Collected:

- Materials Inspection

Observations or Possible Variations from Specifications:

- None

DAILY FIELD ACTIVITIES SUMMARY REPORT
Anticipated Activities for the Following Day
• Pull Fiber Optic Cable between station 12+00 and the GWTS.
Planned Material Deliveries: • Fiber Optic Cable
Contractor Reports, Manifests, Documents Reviewed and Logged:
None
Report Prepared By (Name and Date)

Kevin McKeage	Date: 17 January 2018

Location: Wellhead Vault
Description: Wellhead ARV
Date: 17 January 2018 Direction: East

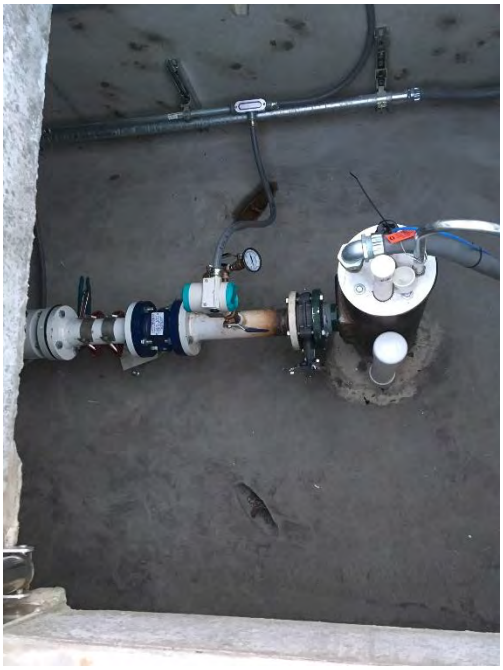

Location: Wellhead Vault
Description: Manual Pressure Gauge
Date: 17 January 2018 Direction: Down

DAILY REPORT

(ATTACH ADDITIONAL SHEETS IF NECESSARY)

CONTRACT NAME:	Kirtland AFB Bulk Fuels Facility Expansion of Dissolved Plume GWTS Design	REPORT NO:	039
CONTRACT NUMBER:	W912DR-12-D-0006	REPORT DATE:	17 JAN 18
REVISION NUMBER:	-	REVISION DATE:	-
TASK ORDER NUMBER:	DM01	PROJECT NAME / LOCATION:	Kirtland BFF
PROJECT NUMBER:	62599DM01	PROJECT DESCRIPTION:	Installation of KAFB-106239 Conveyance Line
PROJECT MANAGER:	Devon Jercinovic	FIELD QUALITY MANAGER:	Kevin McKenzie
CONSTRUCTION MANAGER:	Tyler Curley	SITE SAFETY MANAGER:	Kevin McKenzie

AM WEATHER:	Clear Cold	PM WEATHER:	Cloudy Cool	MAX TEMP (F):	46		

SUMMARY OF WORK PERFORMED TODAY

Materials Inspection ARV and gauge.

HEALTH AND SAFETY REPORT

SAFETY ACTIONS TAKEN TODAY/SAFETY INSPECTIONS CONDUCTED (Include Observations, Safety Violations, Corrective Instructions Given, Corrective Actions Taken, and Results of Safety Inspections Conducted:

See CM's Daily Report

TAILGATE TOPICS:

lc

SAFE BEHAVIOR OBSERVATIONS/SELF-ASSESSMENTS:

l,

OPERATIONS/PRODUCTION REPORT

WORK FORCE – CONTRACTOR AND SUBCONTRACTOR

Company	Cumulative Total of Work Hours From Previous Report	Total Hours Today	Total Work Hours From Start of Injection Event
See CM's Daily Report			

EQUIPMENT ON HAND

Description of Equipment	Make/Model/ Manufacturer	Equipment ID Number	Inspection Performed By
None			

COMMENTS (acceptance status, inspection findings, etc.):

OK

WORK AND/OR TESTS ACCOMPLISHED OR IN PROGRESS

Performed Work/Test for Today:

See CM's Daily Report

Planned Work/Test for Tomorrow:

"

Planned Work/Test for Next Week:

"

CHANGED CONDITIONS/DELAY/CONFLICTS ENCOUNTERED (List any conflicts with the project [i.e., scope of work and/or drawings], delays to the project attributable to site and weather conditions, etc. "

VISITORS AND DISCUSSIONS:

"

QUALITY CONTROL REPORT

MATERIALS DELIVERED TO JOB SITE

Quantity/Volume/ Weight	Description of Materials Received	Make/Model/ Manufacturer	Material Lot Number	Inspection Performed By
1	ARV	Valmatic 1"	—	KM
1	Manual Pressure Gage	—	—	KM

COMMENTS (acceptance status, inspection findings, etc.): OK

INSPECTIONS PERFORMED

Task/Activity Inspected	Inspection Performed	Findings
ARV Installation	Visual	OK

TESTS PERFORMED

Task/Activity Tested	Test Performed	Test Results (Pass/Fail) - Criteria
None		

QUALITY ISSUES AND RESOLUTIONS: None

SUBMITTALS INSPECTION / REVIEW

Submittal No.	Submittal Description	Specification/Plan Reference	Submittal Approved?		Comment/Reason/Action
NA	Daily Report	—	Yes ☐	No ☐	Pending
NA	SBO	—	Yes ☐	No ☐	Pending
NA	PTSP	—	Yes ☐	No ☐	Pending

REGULATORY COMPLIANCE REPORT							
PERMIT INSPECTIONS PERFORMED: None							
WASTE ACCUMULATION/STOCKPILE AREA INSPECTION							
Inspection Performed By:	NA			Signature of Inspector:			
Accumulation / Stockpile Area Inspected:							
No of Bins:		No of Tankers		No of Roll-Off Boxes:		No. of Tanks	
Inspection Results: NA							
GENERAL COMMENTS							
General Comments: (rework, directives, etc.): OK							
ATTACHMENTS							
List of Attachments: (examples, as applicable: submittals, meeting minutes, safety meeting minutes, COCs, weight tickets, manifests, profiles, rework item list, RFIs, DCNs, photographs, etc.): Photo log							
NOTE: Write all entries legibly in ink. Line out all unused portions or designate as "not applicable". Preparer signs first and last name on each completed daily report. This form may be filled out electronically and signed electronically.				PREPARER'S SIGNATURE		01/17/18 DATE	

Location: Wellhead Vault
Description: Wellhead ARV
Date: 17 January 2018 Direction: Down

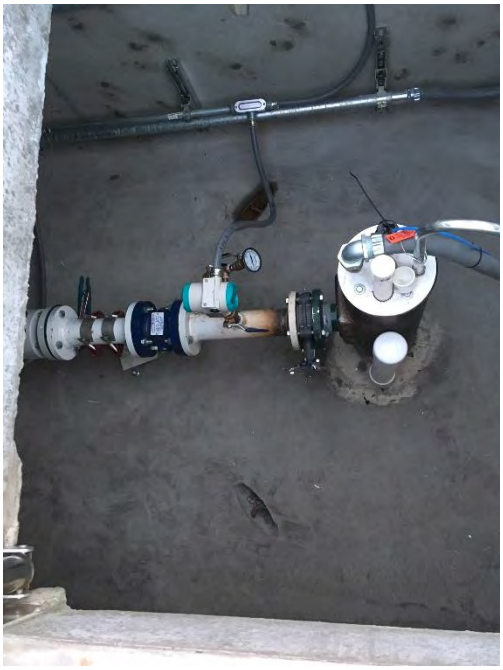

Location: Wellhead Vault
Description: Manual Pressure Gauge
Date: 17 January 2018 Direction: Down

EA Engineering, Science, and Technology, Inc

Employee/Visitor Register and Safety Brief

Date: 01/17/18

Site Entry/Exit		Name (Printed)	Signature	Company
Time In	Time Out			
0700	0720	Kevin McKenzie		EA
7:00	0720	Mike Clifford		Rupert
7:00	0720	Elias Gallegos		Rupert PHI

EA Engineering, Science, and Technology, Inc.

DAILY SAFETY INSPECTION CHECKLIST
(TO BE COMPLETED EACH DAY OF CONSTRUCTION OR HTRW SITE ACTIVITIES)

Site: 106239 Conveyance Line
Location: Wellhead
Project No.: 62599PM101
Client: USACE

Prepared by SSHO: Kevin McKenzie
Project Manager: Devon Jercinovic
Date : 01/17/18

Rating	Y	N	N/A	Comments/Immediate Corrective Action[1]
Accident Prevention Plan (APP) and Site Safety and Health Plan (SSHP) General Requirements				
Are there new onsite personnel? • Did they receive pre-entry briefing and are their names recorded in field logbook or daily log? • Was the USACE PM made aware of the new personnel. • Required training and medical surveillance documentation received (e.g., 40-hr, 8 hr, etc.)?		✓		
Did personnel sign in/out of site?	✓			
Daily tailgate safety meetings conducted and documented?	✓			
Were new activities performed today? Were hazards identified, discussed during the daily safety tailgate, and incorporated into revised APP/SSHP?		✓		
New materials brought on site? MSDSs available?	✓			
Exclusion (EZ), Contamination Reduction (CRZ), and Support Zones (SZ) delineated and enforced?			✓	
General housekeeping measures in place to prevent hazards?	✓			
Emergency Planning				
Were there any changes to emergency contact names, telephone numbers, or hospital? If so, were site personnel made aware and was information distributed/reposted.		✓		
Adequate safety equipment inventory available?	✓			
Fire extinguisher available (monthly inspection of extinguisher will suffice)	✓			
Eyewash station(s) functioning and in place (weekly inspection of eye wash station will suffice)?	✓			
First aid supplies available (weekly inspection of first aid kit will suffice)?	✓			
Communication equipment readily available for emergencies?	✓			
Any reported accidents/incidents at this site? If so, were accident reporting procedures followed?		✓		
Air Monitoring				
Monitoring equipment specified in SSHP available and in working order? Air monitoring instrumentation for this site includes – check each if required/on site, note deficiencies in comments: • Combustible gas meter • Organic vapor analyzer • Contaminant specific analyzer for benzene (if total organic vapor concentrations exceed 0.5 ppm)			✓	
Monitoring equipment calibrated and calibration records			✓	

Y = Satisfactory or Yes; N = Unsatisfactory or No, N/A = Not applicable

Rating	Y	N	N/A	Comments/Immediate Corrective Action[1]
available?				
Environmental and personnel monitoring performed as specified in SSHP?			✓	
PPE				
Proper dermal protection worn by EA and subcontracted employees when handling/ contacting hazardous chemicals or contaminated environmental media?	✓			
Required PPE (hard hats, safety boots / shoes, eye protection with side shields, hearing protection) being worn by EA and subcontracted employees?	✓			
PPE inspection completed by SSHO?	✓			
Drill Rig Operations				
Daily rig inspection completed? Any equipment problems?			✓	
Drill rigs/elevated equipment maintaining minimum 10-ft distance from energized (50 kV) overhead power lines?			✓	
Investigation-derived Waste (IDW)				
Wastes properly staged, secured, and labeled at end of day?	✓			

Additional Comments:

Site Safety and Health Officer's Signature

01/17/18

Date

[1]If a deficiency is noted that cannot be immediately corrected, the SSHO will monitor the progress in correcting the deficiency and will document following:

- Date the deficiency was identified
- Description of the deficiency
- Name of the person responsible for correcting the deficiency
- Projected date of correction
- Actual date of correction.

HEALTH AND SAFETY ACTIVITY REPORT

Site: 106239 Conveyance Line Location: Wellhead

Weather Cond.: Clear, Cold Onsite Hours: From 0700 To 0720

Changes in PPE Levels[1]	Work Operations	Reasons for Change
None		

Site Safety and Health Plan Violations	Corrective Action Specified	Corrective Action Taken [2](yes/no)
None		

Observations and Comments:

None

Completed by: _____ Date: 01/17/18

Site Health and Safety Supervisor

[1]Only SSHO may change PPE levels, using only criteria specified in APP/SSHP.

[2]If a deficiency is noted that cannot be immediately corrected, the SSHO will monitor the progress in correcting the deficiency and will document following:

- Date the deficiency was identified
- Description of the deficiency
- Name of the person responsible for correcting the deficiency
- Projected date of correction
- Actual date of correction.

EA ENGINEERING, SCIENCE AND TECHNOLOGY, INC.
SAFETY MEETING REPORT

Date: 01/17/18	**Time:** 0700	**Duration of meeting:** 5	**Project #** 62599[illegible]
Location: Well head		**Task:** Install ARV and gauge	

Type of meeting: X **Daily** ___ **Weekly** ___ **Monthly** ___ **Other:** _____

Items/Issues discussed:

1. Hand tool use
2. Cold safety
3. Falling objects
4.
5.

Attach minutes of safety meeting if taken.

Safety questions/issues raised:	**Actions/Follow-up needed:**
1. None	
2.	
3.	
4.	
5.	
6.	

Remarks:

None

Meeting conducted by: Kevin McKeage

From:	McKeage, Kevin
To:	Trent Simpler; Amy Sanchez; Mark Phaneuf; Carlos Salazar; "Dreeland, Linda SPA"
Cc:	Jercinovic, Devon; Curley, Tyler; Morse, Earl; Bowman, Matthew; Ferrari, Peter
Subject:	Activity Report for KAFB-106239 Conveyance Line Installation 18 January 2018
Date:	Thursday, January 18, 2018 5:53:57 PM
Attachments:	Daily Field Activities Summary Report 01-18-18.pdf Photos 1-18-18.pdf 040 CQM Daily Report 18JAN18.pdf

---

Issues Today 18 Thursday January 2018:

- None

Resolution of Issues:

- None

Work Performed Today:

- Located and removed damage to fiber optic cable along the excess cable in the electrical vault at Sta 12+00
- Re-spliced existing cables (no new cable needed to be pulled)
- Performed initial continuity test on all 12 strands of the fiber optic cable (all 12 passed)

Installation Completion to Date: 96%

Work Planned for 19 Friday January 2018:

- Perform final tests on the fiber optic cable.

Please let me know if you need additional information.

Kevin McKeage
Engineer I

Cell: (316) 765-1486
Direct Dial: (505) 933-6417
Office: (505) 224-9013 Ext. 1517
Fax: (505) 224-9016
kmckeage@eaest.com

EA Engineering, Science, and Technology, Inc., PBC
320 Gold Ave, Suite. 1300
Albuquerque, NM 87102
www.eaest.com

DAILY FIELD ACTIVITIES SUMMARY REPORT		
PROJECT NAME: KAFB Well 106239 Conveyance Line Installation		
Date: 01-18-18	Time Shift Beginning: 0800	Time Shift Ending: 1600
Project Number: 62599DM01		Contract/Task Order No.:
Client: USACE		Report By: Kevin McKeage
Contractor(s): Wilson Electric/Netsian		Project Manager: Devon Jercinovic
Design Manager:		Oversight Manager: Kevin McKeage
Design Engineer: George Nemeth		Site Engineer: Tyler Curley
Weather: Sunny 53° F		Logbook Number: NA
Personnel Onsite:	**Name:**	**Reason for Being Onsite:**
EA	Kevin McKeage	Safety Oversight
Netsian	Michael Pearson Steven Benjamin Matthew Hall-Lopez	Electrical Contractor
Work Performed:		

Planned Activities:

- Pull new fiber optic cable
- Complete fiber optic splice on new cable at Sta 12+00 vault.
- Perform tests on the fiber optic line.

Completed Activities:

- During preparation to pull the new fiber optic cable, the damaged portion of the existing cable was located and removed.
- Completed fiber optic splice of the existing cable at Sta 12+00 vault.
- Completed initial continuity test on the fiber optic line.

Material Deliveries:

None

Construction Quality Control Activities or Samples Collected:

- Testing Inspection

Observations or Possible Variations from Specifications:

- None

Anticipated Activities for the Following Day:

- Perform final testing of fiber optic strands.

Planned Material Deliveries:

- None

Contractor Reports, Manifests, Documents Reviewed and Logged:

- None

Report Completed By:

Kevin McKeage	Date: 18 January 2018

Location: Station 12+00
Description: Fiber Optic Splicing
Date: 18 January 2018 Direction: Down

Location: KAFB-106239 Electrical Pad
Description: Fiber Optic Continuity Testing
Date: 18 January 2018 Direction: Southeast

DAILY REPORT

(ATTACH ADDITIONAL SHEETS IF NECESSARY)

CONTRACT NAME:	Kirtland AFB Bulk Fuels Facility Expansion of Dissolved Plume GWTS Design	REPORT NO:	040
CONTRACT NUMBER:	W912DR-12-D-0006	REPORT DATE:	18JAN18
REVISION NUMBER:	-	REVISION DATE:	-
TASK ORDER NUMBER:	DM01	PROJECT NAME / LOCATION:	Kirtland BFF
PROJECT NUMBER:	62599DM01	PROJECT DESCRIPTION:	Installation of KAFB-106239 Conveyance Line
PROJECT MANAGER:	Devon Jercinovic	FIELD QUALITY MANAGER:	Kevin McKenzie
CONSTRUCTION MANAGER:	Tyler Curley	SITE SAFETY MANAGER:	Kevin McKenzie

AM WEATHER:	Clear Cold	PM WEATHER:	Clear Cool	MAX TEMP (F):	53		

SUMMARY OF WORK PERFORMED TODAY

CQM Inspection of Activities and Testing

HEALTH AND SAFETY REPORT

SAFETY ACTIONS TAKEN TODAY/SAFETY INSPECTIONS CONDUCTED (Include Observations, Safety Violations, Corrective Instructions Given, Corrective Actions Taken, and Results of Safety Inspections Conducted:

See CM's Daily Report

TAILGATE TOPICS:

//

SAFE BEHAVIOR OBSERVATIONS/SELF-ASSESSMENTS:

//

OPERATIONS/PRODUCTION REPORT

WORK FORCE – CONTRACTOR AND SUBCONTRACTOR

Company	Cumulative Total of Work Hours From Previous Report	Total Hours Today	Total Work Hours From Start of Injection Event
See CM's Daily Report			

EQUIPMENT ON HAND

Description of Equipment	Make/Model/ Manufacturer	Equipment ID Number	Inspection Performed By
None			

COMMENTS (acceptance status, inspection findings, etc.):

OK

WORK AND/OR TESTS ACCOMPLISHED OR IN PROGRESS

Performed Work/Test for Today: See CM's Daily Report

Planned Work/Test for Tomorrow: "

Planned Work/Test for Next Week: "

CHANGED CONDITIONS/DELAY/CONFLICTS ENCOUNTERED (List any conflicts with the project [i.e., scope of work and/or drawings], delays to the project attributable to site and weather conditions, etc. "

VISITORS AND DISCUSSIONS: "

QUALITY CONTROL REPORT

MATERIALS DELIVERED TO JOB SITE

Quantity/Volume/ Weight	Description of Materials Received	Make/Model/ Manufacturer	Material Lot Number	Inspection Performed By
None				

COMMENTS (acceptance status, inspection findings, etc.): None

INSPECTIONS PERFORMED

Task/Activity Inspected	Inspection Performed	Findings
Fiber optic Splice	Visual	OK

TESTS PERFORMED

Task/Activity Tested	Test Performed	Test Results (Pass/Fail) - Criteria
Fiber optic	Continuity	Pass 12 strands

QUALITY ISSUES AND RESOLUTIONS: None

SUBMITTALS INSPECTION / REVIEW

Submittal No.	Submittal Description	Specification/Plan Reference	Submittal Approved?		Comment/Reason/Action
NA	Daily Report	-	Yes ☐	No ☐	Pending
NA	SBO	-	Yes ☐	No ☐	Pending
NA	PTSP	-	Yes ☐	No ☐	Pending

REGULATORY COMPLIANCE REPORT

PERMIT INSPECTIONS PERFORMED: None

WASTE ACCUMULATION/STOCKPILE AREA INSPECTION

Inspection Performed By:	NA			Signature of Inspector:			
Accumulation / Stockpile Area Inspected:							
No of Bins:		No of Tankers		No of Roll-Off Boxes:		No. of Tanks	

Inspection Results: NA

GENERAL COMMENTS

General Comments: (rework, directives, etc.): OK

ATTACHMENTS

List of Attachments: (examples, as applicable: submittals, meeting minutes, safety meeting minutes, COCs, weight tickets, manifests, profiles, rework item list, RFIs, DCNs, photographs, etc.): Photo log, testing forms to be provided later.

NOTE: Write all entries legibly in ink. Line out all unused portions or designate as "not applicable". Preparer signs first and last name on each completed daily report. This form may be filled out electronically and signed electronically.

PREPARER'S SIGNATURE: 18JAN18 DATE

Location: Electrical Pad
Description: Fiber Optic Testing (All strands passed initial continuity testing)
Date: 18 January 2018 Direction: Southeast

Location: Station 12+00
Description: Fiber Optic Arc Fusion Splicing
Date: 18 January 2018 Direction: Down

EA Engineering, Science, and Technology, Inc

Employee/Visitor Register and Safety Brief

Date: 01/18/18

Site Entry/Exit		Name (Printed)	Signature	Company
Time In	Time Out			
0800	1600	Kevin McKeague		EA
0800	1600	Steven Benjamin		Netsian
8:00	9:30	Matthew Hall-Lopez		Netsian
11:30	1600	Michael Pearson		Netsian

EA ENGINEERING, SCIENCE AND TECHNOLOGY, INC.
SAFETY MEETING REPORT

Date: 8 Km 01/18/18	Time: 0805	Duration of meeting: 5	Project # 62599.01
Location: Station 12+00		Task: Fiber Optic Splice	

Type of meeting: X Daily ___ Weekly ___ Monthly ___ Other: _____

Items/Issues discussed:

1. Hand tool use
2. pinch points
3. Cold weather
4.
5.

Attach minutes of safety meeting if taken.

Safety questions/issues raised:	Actions/Follow-up needed:
1. None	
2.	
3.	
4.	
5.	
6.	

Remarks: None

Meeting conducted by: Kevin McKeage

EA Engineering, Science, and Technology, Inc.

DAILY SAFETY INSPECTION CHECKLIST
(TO BE COMPLETED EACH DAY OF CONSTRUCTION OR HTRW SITE ACTIVITIES)

Site: Conveyance Line KAFB-166739
Location: Station 12+00
Project No.: 62599 DR01
Client: USACE

Prepared by SSHO: Kevin McKenzie
Project Manager: Devin Jerichow
Date: 01/18/18

Rating	Y	N	N/A	Comments/Immediate Corrective Action[1]
Accident Prevention Plan (APP) and Site Safety and Health Plan (SSHP) General Requirements				
Are there new onsite personnel? • Did they receive pre-entry briefing and are their names recorded in field logbook or daily log? • Was the USACE PM made aware of the new personnel. • Required training and medical surveillance documentation received (e.g., 40-hr, 8 hr, etc.)?		✓		
Did personnel sign in/out of site?	✓			
Daily tailgate safety meetings conducted and documented?	✓			
Were new activities performed today? Were hazards identified, discussed during the daily safety tailgate, and incorporated into revised APP/SSHP?		✓		
New materials brought on site? MSDSs available?		✓		
Exclusion (EZ), Contamination Reduction (CRZ), and Support Zones (SZ) delineated and enforced?			✓	
General housekeeping measures in place to prevent hazards?	✓			
Emergency Planning				
Were there any changes to emergency contact names, telephone numbers, or hospital? If so, were site personnel made aware and was information distributed/reposted.		✓		
Adequate safety equipment inventory available?	✓			
Fire extinguisher available (monthly inspection of extinguisher will suffice)	✓			
Eyewash station(s) functioning and in place (weekly inspection of eye wash station will suffice)?	✓			
First aid supplies available (weekly inspection of first aid kit will suffice)?	✓			
Communication equipment readily available for emergencies?	✓			
Any reported accidents/incidents at this site? If so, were accident reporting procedures followed?		✓		
Air Monitoring				
Monitoring equipment specified in SSHP available and in working order? Air monitoring instrumentation for this site includes – check each if required/on site, note deficiencies in comments: • Combustible gas meter • Organic vapor analyzer • Contaminant specific analyzer for benzene (if total organic vapor concentrations exceed 0.5 ppm)			✓	
Monitoring equipment calibrated and calibration records			✓	

Y = Satisfactory or Yes; N = Unsatisfactory or No, N/A = Not applicable

Rating	Y	N	N/A	Comments/Immediate Corrective Action[1]
available?			✓	
Environmental and personnel monitoring performed as specified in SSHP?			✓	
PPE				
Proper dermal protection worn by EA and subcontracted employees when handling/ contacting hazardous chemicals or contaminated environmental media?	✓			
Required PPE (hard hats, safety boots / shoes, eye protection with side shields, hearing protection) being worn by EA and subcontracted employees?	✓			
PPE inspection completed by SSHO?	✓			
Drill Rig Operations				
Daily rig inspection completed? Any equipment problems?			✓	
Drill rigs/elevated equipment maintaining minimum 10-ft distance from energized (50 kV) overhead power lines?			✓	
Investigation-derived Waste (IDW)				
Wastes properly staged, secured, and labeled at end of day?			✓	

Additional Comments:

Site Safety and Health Officer's Signature

01/18/18
Date

[1]If a deficiency is noted that cannot be immediately corrected, the SSHO will monitor the progress in correcting the deficiency and will document following:

- Date the deficiency was identified
- Description of the deficiency
- Name of the person responsible for correcting the deficiency
- Projected date of correction
- Actual date of correction.

HEALTH AND SAFETY ACTIVITY REPORT

Site: KAFB-106739 Conveyance Line Location: Sta 12+00

Weather Cond.: Clear, Cold Onsite Hours: From 0800 To 1600

Changes in PPE Levels[1]	Work Operations	Reasons for Change
None		

Site Safety and Health Plan Violations	Corrective Action Specified	Corrective Action Taken [2] (yes/no)
None		

Observations and Comments:

None

Completed by: [signature] Kevin McKnight Date: 01/18/18

Site Health and Safety Supervisor

[1] Only SSHO may change PPE levels, using only criteria specified in APP/SSHP.

[2] If a deficiency is noted that cannot be immediately corrected, the SSHO will monitor the progress in correcting the deficiency and will document following:

- Date the deficiency was identified
- Description of the deficiency
- Name of the person responsible for correcting the deficiency
- Projected date of correction
- Actual date of correction.

From:	McKeage, Kevin
To:	Trent Simpler; Amy Sanchez; Mark Phaneuf; Carlos Salazar; "Dreeland, Linda SPA"
Cc:	Jercinovic, Devon; Curley, Tyler; Morse, Earl; Bowman, Matthew; Ferrari, Peter
Subject:	Activity Report for KAFB-106239 Conveyance Line Installation 19 January 2018
Date:	Friday, January 19, 2018 5:07:00 PM
Attachments:	Daily Field Activities Summary Report 01-19-18.pdf 041 COM Daily Report 19JAN18.pdf Photos 01-19-18.pdf

---

Issues Today 19 Friday January 2018:

- None

Resolution of Issues:

- None

Work Performed Today:

- Performed remain continuity tests on all 12 strands of the fiber optic cable (all 12 passed, final testing documents expected Monday)

Installation Completion to Date: 96%

Work Planned for 22 Monday January 2018:

- Connect and energize KAFB-106239 conductors.
- Begin controls install and testing.

Please let me know if you need additional information.

Kevin McKeage
Engineer I

Cell: (316) 765-1486
Direct Dial: (505) 933-6417
Office: (505) 224-9013 Ext. 1517
Fax: (505) 224-9016
kmckeage@eaest.com

EA Engineering, Science, and Technology, Inc., PBC
320 Gold Ave, Suite. 1300
Albuquerque, NM 87102
www.eaest.com

DAILY FIELD ACTIVITIES SUMMARY REPORT		
PROJECT NAME: KAFB Well 106239 Conveyance Line Installation		
Date: 01-19-18	Time Shift Beginning: 0700	Time Shift Ending: 1130
Project Number: 62599DM01		Contract/Task Order No.:
Client: USACE		Report By: Kevin McKeage
Contractor(s): Wilson Electric/Netsian		Project Manager: Devon Jercinovic
Design Manager:		Oversight Manager: Peter Ferrari
Design Engineer: George Nemeth		Site Engineer: Tyler Curley
Weather: Clear, Warm 59°F		Logbook Number: NA
Personnel Onsite	**Name**	**Reason for Being Onsite**
EA:	Peter Ferrari Kevin McKeage	Safety Oversight
Netsian	Michael Pearson Steven Benjamin	Electrical Contractor

Work Performed

Planned Activities:

- Perform final tests on fiber optic cable.

Completed Activities:

- Performed final tests on fiber optic cable.

Material Deliveries:

- None

Construction Quality Control Activities or Samples Collected:

- CQM Report Attached

Observations or Possible Variations from Specifications:

- None

DAILY FIELD ACTIVITIES SUMMARY REPORT
Anticipated Activities for the Following Day
• Connect and energize KAFB-106239 conductors. • Begin initial pump testing and controls install.
Planned Material Deliveries: • None
Contractor Reports, Manifests, Documents Reviewed and Logged:
None
Report Prepared By (Name and Date)

Kevin McKeage	Date: 19 January 2018

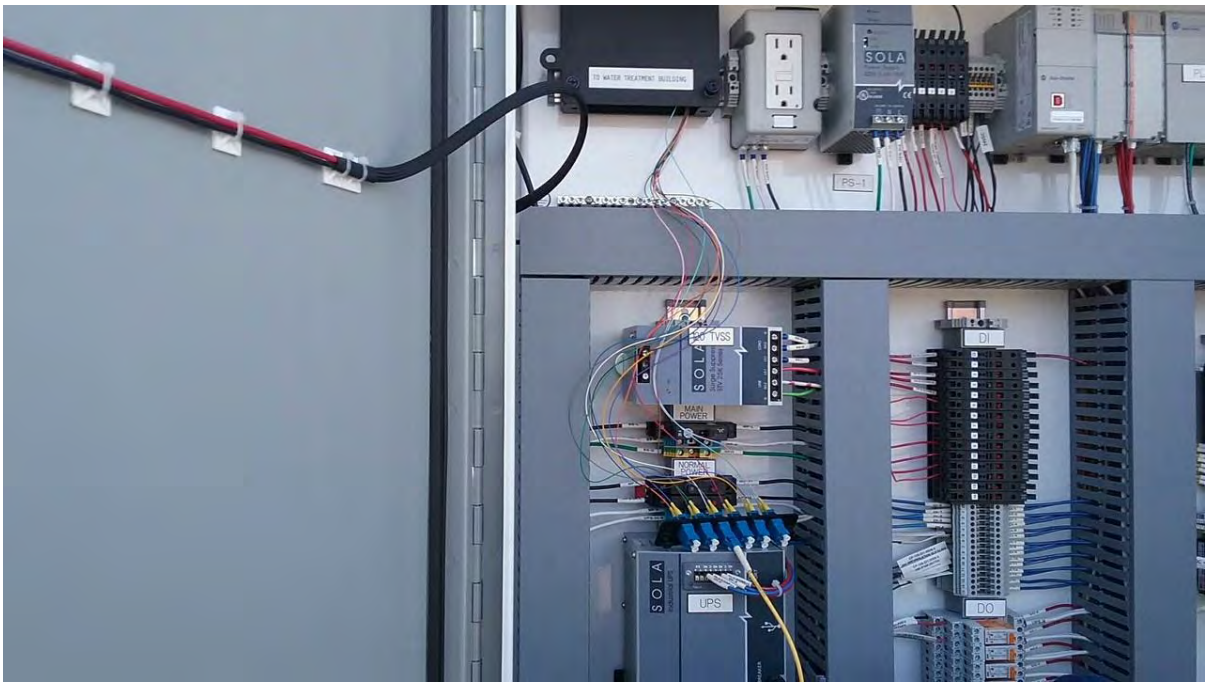

Location: Electrical Pad
Description: Fiber Optic Testing
Date: 19 January 2018 Direction: South

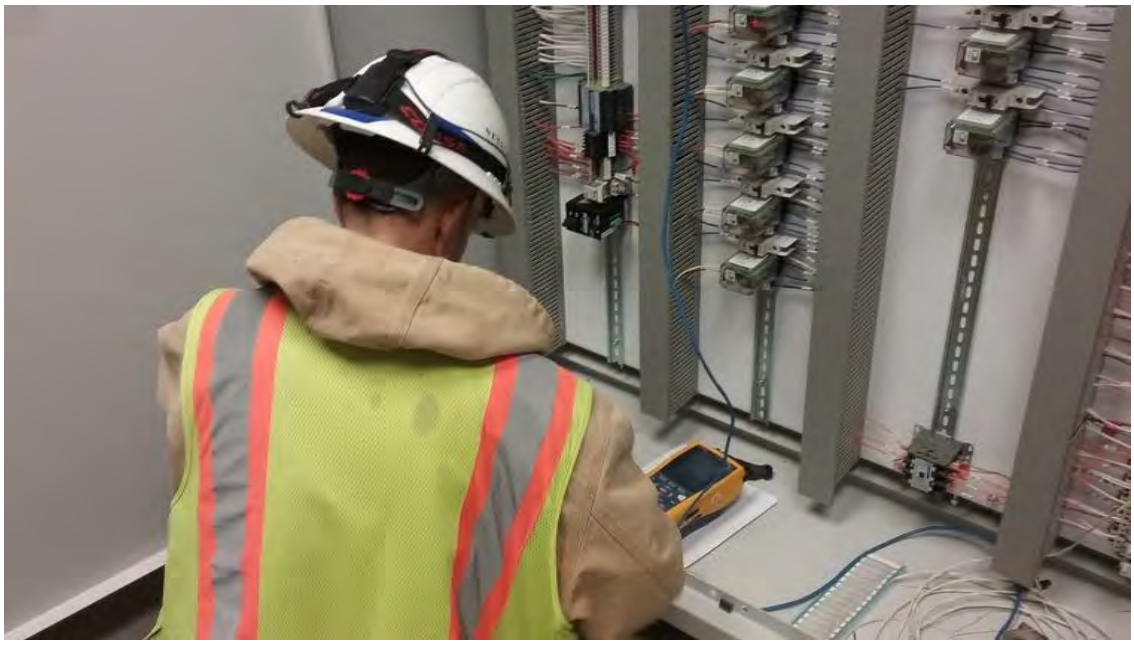

Location: GWTS Control Room
Description: Fiber Optic Testing
Date: 19 January 2018 Direction: South

DAILY REPORT

(ATTACH ADDITIONAL SHEETS IF NECESSARY)

CONTRACT NAME:	Kirtland AFB Bulk Fuels Facility Expansion of Dissolved Plume GWTS Design	REPORT NO:	041
CONTRACT NUMBER:	W912DR-12-D-0006	REPORT DATE:	01/24/18
REVISION NUMBER:	-	REVISION DATE:	-
TASK ORDER NUMBER:	DM01	PROJECT NAME / LOCATION:	Kirtland BFF
PROJECT NUMBER:	62599DM01	PROJECT DESCRIPTION:	Installation of KAFB-106239 Conveyance Line
PROJECT MANAGER:	Devon Jercinovic	FIELD QUALITY MANAGER:	Kevin McKenzie
CONSTRUCTION MANAGER:	Tyler Curtis	SITE SAFETY MANAGER:	Peter Ferrari

AM WEATHER:	Clear Cold	PM WEATHER:	Clear Cool	MAX TEMP (F):	56		

SUMMARY OF WORK PERFORMED TODAY

Testing Observation

HEALTH AND SAFETY REPORT

SAFETY ACTIONS TAKEN TODAY/SAFETY INSPECTIONS CONDUCTED (Include Observations, Safety Violations, Corrective Instructions Given, Corrective Actions Taken, and Results of Safety Inspections Conducted:

See CM's Daily Report

TAILGATE TOPICS:

"

SAFE BEHAVIOR OBSERVATIONS/SELF-ASSESSMENTS:

"

OPERATIONS/PRODUCTION REPORT

WORK FORCE – CONTRACTOR AND SUBCONTRACTOR

Company	Cumulative Total of Work Hours From Previous Report	Total Hours Today	Total Work Hours From Start of Injection Event
See CM's Daily Report			

EQUIPMENT ON HAND

Description of Equipment	Make/Model/ Manufacturer	Equipment ID Number	Inspection Performed By
None			

COMMENTS (acceptance status, inspection findings, etc.):

OK

WORK AND/OR TESTS ACCOMPLISHED OR IN PROGRESS

Performed Work/Test for Today: See CM's Daily Report

Planned Work/Test for Tomorrow: "

Planned Work/Test for Next Week: "

CHANGED CONDITIONS/DELAY/CONFLICTS ENCOUNTERED (List any conflicts with the project [i.e., scope of work and/or drawings], delays to the project attributable to site and weather conditions, etc. "

VISITORS AND DISCUSSIONS: "

QUALITY CONTROL REPORT

MATERIALS DELIVERED TO JOB SITE

Quantity/Volume/ Weight	Description of Materials Received	Make/Model/ Manufacturer	Material Lot Number	Inspection Performed By
None				

COMMENTS (acceptance status, inspection findings, etc.): None

INSPECTIONS PERFORMED

Task/Activity Inspected	Inspection Performed	Findings
Fiber Testing	Visual	OK

TESTS PERFORMED

Task/Activity Tested	Test Performed	Test Results (Pass/Fail) - Criteria
Fiber Optics	Remaining Continuity test	All 12 Passed.

QUALITY ISSUES AND RESOLUTIONS: None

SUBMITTALS INSPECTION / REVIEW

Submittal No.	Submittal Description	Specification/Plan Reference	Submittal Approved?		Comment/Reason/Action
NA	Daily Report	-	Yes ☐	No ☐	Pending
NA	SBO	-	Yes ☐	No ☐	Pending
NA	PTSP	-	Yes ☐	No ☐	Pending

REGULATORY COMPLIANCE REPORT							
PERMIT INSPECTIONS PERFORMED: None							
WASTE ACCUMULATION/STOCKPILE AREA INSPECTION							
Inspection Performed By:	NA			Signature of Inspector:			
Accumulation / Stockpile Area Inspected:							
No of Bins:		No of Tankers		No of Roll-Off Boxes:		No. of Tanks	
Inspection Results: NA							
GENERAL COMMENTS							
General Comments: (rework, directives, etc.): OK,							
ATTACHMENTS							
List of Attachments: (examples, as applicable: submittals, meeting minutes, safety meeting minutes, COCs, weight tickets, manifests, profiles, rework item list, RFIs, DCNs, photographs, etc.): CM-Photo log, testing forms to be submitted 01/22/18							
NOTE: Write all entries legibly in ink. Line out all unused portions or designate as "not applicable". Preparer signs first and last name on each completed daily report. This form may be filled out electronically and signed electronically.				PREPARER'S SIGNATURE		DATE 01/19/18	

EA Engineering, Science, and Technology, Inc

Employee/Visitor Register and Safety Brief

Date: 01/19/18

Site Entry/Exit		Name (Printed)	Signature	Company
Time In	Time Out			
0705	0800	Kevin McKeon		EA
0700	1130	Michael Pearson		Netsian
0700	1130	Steven Benjamin		Netsian
0730	1130	Pete Ferrari	Pete Ferrari	EA

EA ENGINEERING, SCIENCE AND TECHNOLOGY, INC.
SAFETY MEETING REPORT

Date: 1-19-18	Time: 0740	Duration of meeting: 5 min	Project #
Location: GWTS Kirtland AFB Building 19150		Task: Wilson Electric to test fiber optic cable	

Type of meeting: ✓ Daily ___ Weekly ___ Monthly ___ Other: _____

Items/Issues discussed:

1. Pinch Points –
2. General House Keeping –
3.
4.
5.

Attach minutes of safety meeting if taken.

Safety questions/issues raised:	Actions/Follow-up needed:
1.	
2.	
3.	
4.	
5.	
6.	

Remarks:

Meeting conducted by:

Kevin McKeage

EA Engineering, Science, and Technology, Inc.

DAILY SAFETY INSPECTION CHECKLIST
(TO BE COMPLETED EACH DAY OF CONSTRUCTION OR HTRW SITE ACTIVITIES)

Site: KAFB BFF GWTS Expansion
Location: GWTS, Electrical Pad well 239
Project No.:
Client: USACE

Prepared by SSHO: Pete Ferrari
Project Manager: Devin Sondmire
Date: 1-19-18

Rating	Y	N	N/A	Comments/Immediate Corrective Action[1]
Accident Prevention Plan (APP) and Site Safety and Health Plan (SSHP) General Requirements				
Are there new onsite personnel? • Did they receive pre-entry briefing and are their names recorded in field logbook or daily log? • Was the USACE PM made aware of the new personnel. • Required training and medical surveillance documentation received (e.g., 40-hr, 8 hr, etc.)?		✓		
Did personnel sign in/out of site?	✓			
Daily tailgate safety meetings conducted and documented?	✓			
Were new activities performed today? Were hazards identified, discussed during the daily safety tailgate, and incorporated into revised APP/SSHP?		✓		
New materials brought on site? MSDSs available?		✓		
Exclusion (EZ), Contamination Reduction (CRZ), and Support Zones (SZ) delineated and enforced?	✓			
General housekeeping measures in place to prevent hazards?	✓			
Emergency Planning				
Were there any changes to emergency contact names, telephone numbers, or hospital? If so, were site personnel made aware and was information distributed/reposted.		✓		
Adequate safety equipment inventory available?	✓			
Fire extinguisher available (monthly inspection of extinguisher will suffice)	✓			
Eyewash station(s) functioning and in place (weekly inspection of eye wash station will suffice)?	✓			
First aid supplies available (weekly inspection of first aid kit will suffice)?	✓			
Communication equipment readily available for emergencies?	✓			
Any reported accidents/incidents at this site? If so, were accident reporting procedures followed?			✓	
Air Monitoring				
Monitoring equipment specified in SSHP available and in working order? Air monitoring instrumentation for this site includes – check each if required/on site, note deficiencies in comments: • Combustible gas meter • Organic vapor analyzer • Contaminant specific analyzer for benzene (if total organic vapor concentrations exceed 0.5 ppm)			✓	
Monitoring equipment calibrated and calibration records			✓	

Y = Satisfactory or Yes; N = Unsatisfactory or No, N/A = Not applicable

Rating	Y	N	N/A	Comments/Immediate Corrective Action[1]
available?				
Environmental and personnel monitoring performed as specified in SSHP?				
PPE				
Proper dermal protection worn by EA and subcontracted employees when handling/ contacting hazardous chemicals or contaminated environmental media?				
Required PPE (hard hats, safety boots / shoes, eye protection with side shields, hearing protection) being worn by EA and subcontracted employees?				
PPE inspection completed by SSHO?				
Drill Rig Operations				
Daily rig inspection completed? Any equipment problems?				
Drill rigs/elevated equipment maintaining minimum 10-ft distance from energized (50 kV) overhead power lines?				
Investigation-derived Waste (IDW)				
Wastes properly staged, secured, and labeled at end of day?				
Additional Comments:				

Site Safety and Health Officer's Signature

1-19-18

Date

[1]If a deficiency is noted that cannot be immediately corrected, the SSHO will monitor the progress in correcting the deficiency and will document following:

- Date the deficiency was identified
- Description of the deficiency
- Name of the person responsible for correcting the deficiency
- Projected date of correction
- Actual date of correction.

HEALTH AND SAFETY ACTIVITY REPORT

Site: KAFB BFF Expansion KAFB-106239 Location: GW 75, Electrical Pad

Weather Cond.: Cold Sunny, Hi 10s 50s Onsite Hours: From 0700 To _____

Changes in PPE Levels[1]	Work Operations	Reasons for Change
None		

Site Safety and Health Plan Violations	Corrective Action Specified	Corrective Action Taken[2] (yes/no)
None		

Observations and Comments:

Completed by: Pete Jumars Date: 1-19-18
Site Health and Safety Supervisor

[1]Only SSHO may change PPE levels, using only criteria specified in APP/SSHP.
[2]If a deficiency is noted that cannot be immediately corrected, the SSHO will monitor the progress in correcting the deficiency and will document following:

- Date the deficiency was identified
- Description of the deficiency
- Name of the person responsible for correcting the deficiency
- Projected date of correction
- Actual date of correction.

From:	Curley, Tyler
To:	"Trent.Simpler@usace.army.mil"; "Amy.E.Sanchez@usace.army.mil"; "Carlos.F.Salazar@usace.army.mil"; "Linda.Dreeland@usace.army.mil"; "Mark.J.Phaneuf@usace.army.mil"
Cc:	Jercinovic, Devon; McKeage, Kevin; Morse, Earl; Bowman, Matthew
Subject:	Activity Report for KAFB Well 106239 Conveyance Line Installation 22 January 2018
Date:	Monday, January 22, 2018 9:00:50 PM
Attachments:	Daily Field Activities Summary Report.pdf Photos 1-22-18.pdf 042 CQM Daily Report 22JAN18.pdf

---

Issues Today 22 Monday January 2018:

- None

Resolution of Issues:

- None

Work Performed Today:

- Connected power for well 239
- Surveyed the 239 conveyance line

Installation Completion to Date: 97%

Work Planned for the following days:

- Begin extraction well start up testing

Tyler Curley, P.E.
EA Engineering, Science, and Technology, Inc., PBC
320 Gold Avenue, SW Suite 1300
Albuquerque, NM 87120
(505) 715-4422 work
(719) 688-9558 cell
tcurley@eaest.com

DAILY FIELD ACTIVITIES SUMMARY REPORT		
PROJECT NAME: KAFB Well 106239 Conveyance Line Installation		
Date: 1-22-18	Time Shift Beginning: 0700	Time Shift Ending: 1500
Project Number: 62599DM01		Contract/Task Order No.:
Client: USACE		Report By: Tyler Curley
Contractor(s): Wilson Electric		Project Manager: Devon Jercinovic
Design Manager:		Oversight Manager: Tyler Curley
Design Engineer: George Nemeth		Site Engineer: Tyler Curley
Weather: Sunny 45° F		Logbook Number: NA
Personnel Onsite:	**Name:**	**Reason for Being Onsite:**
EA	Kevin McKeage	Construction/Safety Oversight
Wilson Electric	Britt Crooks Jaime Perez	Electrical Contractor
High Mesa	Erik White Mark Van Zniden Leroy Moorhead	Conveyance Line Survey

Work Performed:

Planned Activities:

- Connect power for well 239
- Survey the 239 conveyance line

Completed Activities:

- Connected power for well 239
- Surveyed the 239 conveyance line

Material Deliveries:

- None

Construction Quality Control Activities or Samples Collected:

- None

Observations or Possible Variations from Specifications:

- None

Anticipated Activities for the Following Day:

- Begin extraction well start up testing

Planned Material Deliveries:

- None

Contractor Reports, Manifests, Documents Reviewed and Logged:

- None

Report Completed By:	
Tyler Curley	Date: 22 January 2018

KAFB
CONTACT 811
BEFORE
DIGGING
WARNING
NON-POTABLE
WATER

DAILY REPORT

(ATTACH ADDITIONAL SHEETS IF NECESSARY)

CONTRACT NAME:	Kirtland AFB Bulk Fuels Facility Expansion of Dissolved Plume GWTS Design	REPORT NO:	042
CONTRACT NUMBER:	W912DR-12-D-0006	REPORT DATE:	22JAN18
REVISION NUMBER:	-	REVISION DATE:	-
TASK ORDER NUMBER:	DM01	PROJECT NAME / LOCATION:	Kirtland BFF
PROJECT NUMBER:	62599DM01	PROJECT DESCRIPTION:	Installation of KAFB-106239 Conveyance Line
PROJECT MANAGER:	Devon Jercinovic	FIELD QUALITY MANAGER:	Kevin McKeage
CONSTRUCTION MANAGER:	Tyler Curley	SITE SAFETY MANAGER:	Tyler Curley

AM WEATHER:	Clear Cold	PM WEATHER:	Clear Cool	MAX TEMP (F):	41

SUMMARY OF WORK PERFORMED TODAY

CQM Inspection of materials + Review of Fiber Optic Testing.

HEALTH AND SAFETY REPORT

SAFETY ACTIONS TAKEN TODAY/SAFETY INSPECTIONS CONDUCTED (Include Observations, Safety Violations, Corrective Instructions Given, Corrective Actions Taken, and Results of Safety Inspections Conducted:

See CM's Daily Report

TAILGATE TOPICS:

"

SAFE BEHAVIOR OBSERVATIONS/SELF-ASSESSMENTS:

"

OPERATIONS/PRODUCTION REPORT

WORK FORCE – CONTRACTOR AND SUBCONTRACTOR

Company	Cumulative Total of Work Hours From Previous Report	Total Hours Today	Total Work Hours From Start of Injection Event
See CM's Daily Report.			

EQUIPMENT ON HAND

Description of Equipment	Make/Model/ Manufacturer	Equipment ID Number	Inspection Performed By
None			

COMMENTS (acceptance status, inspection findings, etc.):

OK

WORK AND/OR TESTS ACCOMPLISHED OR IN PROGRESS

Performed Work/Test for Today: See CM's Daily Report

Planned Work/Test for Tomorrow: "

Planned Work/Test for Next Week: "

CHANGED CONDITIONS/DELAY/CONFLICTS ENCOUNTERED (List any conflicts with the project [i.e., scope of work and/or drawings], delays to the project attributable to site and weather conditions, etc. "

VISITORS AND DISCUSSIONS: "

QUALITY CONTROL REPORT

MATERIALS DELIVERED TO JOB SITE

Quantity/Volume/ Weight	Description of Materials Received	Make/Model/ Manufacturer	Material Lot Number	Inspection Performed By
16	Monuments	Rhino Triview Post	—	TC

COMMENTS (acceptance status, inspection findings, etc.): Accepted

INSPECTIONS PERFORMED

Task/Activity Inspected	Inspection Performed	Findings
Monument Install	Visual	OK

TESTS PERFORMED

Task/Activity Tested	Test Performed	Test Results (Pass/Fail) - Criteria
Review Fiber Optic	Review	Pass.

QUALITY ISSUES AND RESOLUTIONS: None

SUBMITTALS INSPECTION / REVIEW

Submittal No.	Submittal Description	Specification/Plan Reference	Submittal Approved?		Comment/Reason/Action
NA	Daily Report	–	Yes ☐	No ☐	Pending
NA	SBO	–	Yes ☐	No ☐	Pending
NA	PTSP	–	Yes ☐	No ☐	Pending

REGULATORY COMPLIANCE REPORT							
PERMIT INSPECTIONS PERFORMED: None							
WASTE ACCUMULATION/STOCKPILE AREA INSPECTION							
Inspection Performed By:	NA			Signature of Inspector:			
Accumulation / Stockpile Area Inspected:							
No of Bins:		No of Tankers		No of Roll-Off Boxes:		No. of Tanks	
Inspection Results: NA							
GENERAL COMMENTS							
General Comments: (rework, directives, etc.): OK							
ATTACHMENTS							
List of Attachments: (examples, as applicable: submittals, meeting minutes, safety meeting minutes, COCs, weight tickets, manifests, profiles, rework item list, RFIs, DCNs, photographs, etc.): Photo log + Fiber Optic Test Report.							
NOTE: Write all entries legibly in ink. Line out all unused portions or designate as "not applicable". Preparer signs first and last name on each completed daily report. This form may be filled out electronically and signed electronically.				PREPARER'S SIGNATURE		DATE: 22 JAN 18	

Location: Station 23+20
Description: Rhino Triview Marker
Date: 22 January 2018 Direction: Southeast

Location: Station 19+00
Description: Installation of Marker Post
Date: 22 January 2018 Direction: Down

Cable ID	Summary	Test Limit	Length	Headroom	Date / Time
AQUA STRAND-12	PASS	ANSI/TIA-568.3-D	3196 ft	N/A	01/19/2018 10:31 AM
AQUA STRAND-24	PASS	ANSI/TIA-568.3-D	3199 ft	N/A	01/19/2018 11:16 AM
BLACK STRAND-8	PASS	ANSI/TIA-568.3-D	3199 ft	N/A	01/19/2018 10:15 AM
BLACK STRAND-20	PASS	ANSI/TIA-568.3-D	3198 ft	N/A	01/19/2018 11:07 AM
BLUE STRAND-1	PASS	ANSI/TIA-568.3-D	3199 ft	N/A	01/19/2018 10:04 AM
BLUE STRAND-13	PASS	ANSI/TIA-568.3-D	3200 ft	N/A	01/19/2018 10:52 AM
BROWN STRAND-4	PASS	ANSI/TIA-568.3-D	3198 ft	N/A	01/19/2018 10:07 AM
BROWN STRAND-16	PASS	ANSI/TIA-568.3-D	3199 ft	N/A	01/19/2018 10:58 AM
GREEN STRAND-3	PASS	ANSI/TIA-568.3-D	3198 ft	N/A	01/19/2018 10:06 AM
GREEN STRAND-15	PASS	ANSI/TIA-568.3-D	3198 ft	N/A	01/19/2018 10:56 AM
ORANGE STRAND-2	PASS	ANSI/TIA-568.3-D	3199 ft	N/A	01/19/2018 10:03 AM
ORANGE STRAND-14	PASS	ANSI/TIA-568.3-D	3198 ft	N/A	01/19/2018 10:55 AM
RED STRAND-7	PASS	ANSI/TIA-568.3-D	3200 ft	N/A	01/19/2018 09:58 AM
RED STRAND-19	PASS	ANSI/TIA-568.3-D	3198 ft	N/A	01/19/2018 11:03 AM
ROSE STRAND-11	PASS	ANSI/TIA-568.3-D	3198 ft	N/A	01/19/2018 10:29 AM
ROSE STRAND-23	PASS	ANSI/TIA-568.3-D	3198 ft	N/A	01/19/2018 11:15 AM
SLATE STRAND-5	PASS	ANSI/TIA-568.3-D	3198 ft	N/A	01/19/2018 10:10 AM
SLATE STRAND-17	PASS	ANSI/TIA-568.3-D	3198 ft	N/A	01/19/2018 11:00 AM
STRAND-1	PASS	TIA-568.3-D OSP (OS2)	3183 ft	0.24 dB (Loss Margin)	01/19/2018 09:14 AM
STRAND-2	PASS	TIA-568.3-D OSP (OS2)	3183 ft	0.42 dB (Loss Margin)	01/19/2018 09:14 AM
STRAND-3	PASS	TIA-568.3-D OSP (OS2)	3179 ft	1.21 dB (Loss Margin)	01/19/2018 09:24 AM
STRAND-4	PASS	TIA-568.3-D OSP (OS2)	3179 ft	0.63 dB (Loss Margin)	01/19/2018 09:24 AM
STRAND-5	PASS	TIA-568.3-D OSP (OS2)	3179 ft	1.23 dB (Loss Margin)	01/19/2018 09:27 AM
STRAND-6	PASS	TIA-568.3-D OSP (OS2)	3179 ft	0.69 dB (Loss Margin)	01/19/2018 09:27 AM
STRAND-7	PASS	TIA-568.3-D OSP (OS2)	3179 ft	0.60 dB (Loss Margin)	01/19/2018 09:30 AM
STRAND-8	PASS	TIA-568.3-D OSP (OS2)	3179 ft	0.60 dB (Loss Margin)	01/19/2018 09:30 AM
STRAND-9	PASS	TIA-568.3-D OSP (OS2)	3179 ft	0.71 dB (Loss Margin)	01/19/2018 09:47 AM
STRAND-10	PASS	TIA-568.3-D OSP (OS2)	3179 ft	0.85 dB (Loss Margin)	01/19/2018 09:47 AM
STRAND-11	PASS	TIA-568.3-D OSP (OS2)	3179 ft	1.25 dB (Loss Margin)	01/19/2018 09:12 AM
STRAND-12	PASS	TIA-568.3-D OSP (OS2)	3179 ft	0.04 dB (Loss Margin)	01/19/2018 09:12 AM
TEST-1	PASS	ANSI/TIA-568.3-D	2077 ft	N/A	01/18/2018 09:49 AM
VIOLET STRAND-10	PASS	ANSI/TIA-568.3-D	3198 ft	N/A	01/19/2018 10:28 AM
VIOLET STRAND-22	PASS	ANSI/TIA-568.3-D	3197 ft	N/A	01/19/2018 11:13 AM
WHITE STRAND-6	PASS	ANSI/TIA-568.3-D	3198 ft	N/A	01/19/2018 10:12 AM
WHITE STRAND-18	PASS	ANSI/TIA-568.3-D	3198 ft	N/A	01/19/2018 11:01 AM
YELLOW STRAND-9	PASS	ANSI/TIA-568.3-D	3198 ft	N/A	01/19/2018 10:17 AM
YELLOW STRAND-21	PASS	ANSI/TIA-568.3-D	3198 ft	N/A	01/19/2018 11:08 AM

Total Length:	116991 ft
Number of Reports:	37
Number of Passing Reports:	37
Number of Failing Reports:	0
Number of Warning Reports:	0
Documentation Only:	0

LINKWARE™ PC
CABLE TEST MANAGEMENT SOFTWARE

Cable ID: AQUA STRAND-12

Date / Time: 01/19/2018 10:31:05 AM
Cable Type: OS2 Singlemode
End1 Name: NEW WATER WELL

n = 1.4660 (1310 nm)
n = 1.4670 (1550 nm)
End2 Name: WATER TREATMENT BUILDING

Test Summary: PASS

Backscatter Coefficient: -80.0dB (1310 nm)
Backscatter Coefficient: -82.5dB (1550 nm)

OTDR End1 PASS

Test Limit: ANSI/TIA-568.3-D
Limits Version: 1.9500
Date / Time: 01/19/2018 10:31:05 AM
Operator: STEVEN
Tester: DTX-1800 (9421005 2.7800)
Module: DTX-OTDR-QMOD (1666506)
Calibration Date: 11/20/2017

Launch Only
Launch Type: Singlemode
Launch Length : 530.8 ft

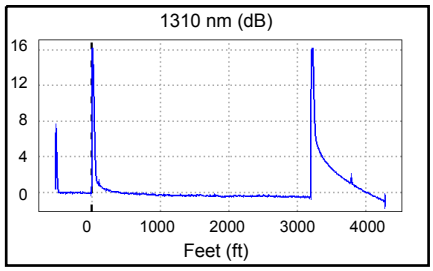

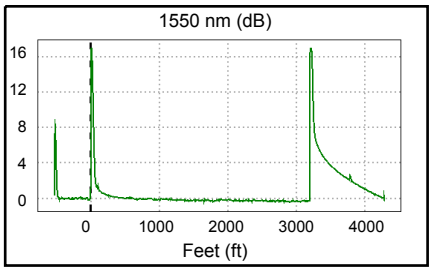

Overall Results	1310 nm	1550 nm	Limit
Overall Length (ft)	3196.1		13123
Overall Loss (dB)	0.44	0.32	
ORL (dB)	N/A	N/A	
Attn Coeff (dB/km)	0.48	0.31	

Settings (Auto OTDR)	1310 nm	1550 nm
Auto OTDR		
Range (Auto)	4946 ft	4949 ft
Resolution (Auto)	0.8 ft	0.8 ft
Pulse Width (Auto)	20 ns	20 ns
Averaging Time (Auto)	9 s	15 s
Loss Threshold (Auto)	0.15 dB	0.15 dB

	Loss (dB)			Reflectance (dB)			Attn Coeff (dB/km)		
Events	1310 nm	1550 nm	Limit	1310 nm	1550 nm	Limit	1310 nm	1550 nm	Limit
3196.1 ft End	N/A	N/A		> -22.20	> -23.13		0.48	0.31	
607.6 ft Loss		0.17	0.30		N/A			N/A	
0.0 ft Launch Event	-0.02	-0.09	0.75	> -25.32	> -28.75		N/A	N/A	
-530.8 ft OTDR Port	N/A	N/A		-47.65	-48.60		N/A	N/A	

LINKWARE™PC
CABLE TEST MANAGEMENT SOFTWARE

Cable ID: AQUA STRAND-24

Date / Time: 01/19/2018 11:16:14 AM
Cable Type: OS2 Singlemode
End1 Name: NEW WATER WELL

n = 1.4660 (1310 nm)
n = 1.4670 (1550 nm)
End2 Name: WATER TREATMENT BUILDING

Test Summary: PASS

Backscatter Coefficient: -80.0dB (1310 nm)
Backscatter Coefficient: -82.5dB (1550 nm)

OTDR End2 PASS

Test Limit: ANSI/TIA-568.3-D
Limits Version: 1.9500
Date / Time: 01/19/2018 11:16:14 AM
Operator: STEVEN
Tester: DTX-1800 (9421005 2.7800)
Module: DTX-OTDR-QMOD (1666506)
Calibration Date: 11/20/2017

Launch Only
Launch Type: Singlemode
Launch Length : 530.0 ft

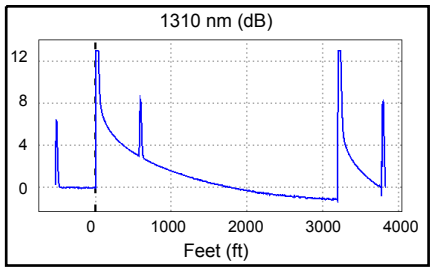

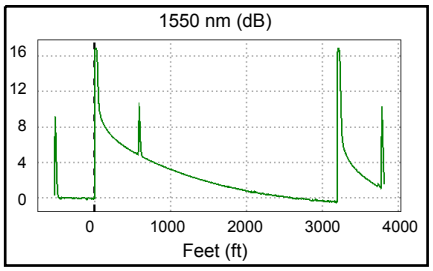

Overall Results	1310 nm	1550 nm	Limit
Overall Length (ft)	3199.2		13123
Overall Loss (dB)	1.12	0.38	
ORL (dB)	N/A	N/A	
Attn Coeff (dB/km)	1.70	N/A	

Settings (Auto OTDR)	1310 nm	1550 nm
Auto OTDR		
Range (Auto)	4491 ft	4485 ft
Resolution (Auto)	0.2 ft	1.7 ft
Pulse Width (Auto)	40 ns	20 ns
Averaging Time (Auto)	5 s	12 s
Loss Threshold (Auto)	0.15 dB	0.15 dB

Events	Loss (dB) 1310 nm	Loss (dB) 1550 nm	Loss (dB) Limit	Reflectance (dB) 1310 nm	Reflectance (dB) 1550 nm	Reflectance (dB) Limit	Attn Coeff (dB/km) 1310 nm	Attn Coeff (dB/km) 1550 nm	Attn Coeff (dB/km) Limit
3199.2 ft End	N/A	N/A		> -25.81	> -23.14		1.70	N/A	
578.7 ft Ghost	N/A	N/A		-44.63	-45.32		N/A	N/A	
0.0 ft Launch Event	-0.24	-1.76	0.75	> -28.68	> -27.25		N/A	N/A	
-530.0 ft OTDR Port	N/A	N/A		-46.46	-48.67		N/A	N/A	

-WARNING: Negative Loss value found in test result.

LINKWARE™ PC
CABLE TEST MANAGEMENT SOFTWARE

Cable ID: BLACK STRAND-8

Date / Time: 01/19/2018 10:15:05 AM
Cable Type: OS2 Singlemode
End1 Name: NEW WATER WELL

n = 1.4660 (1310 nm)
n = 1.4670 (1550 nm)
End2 Name: WATER TREATMENT BUILDING

Test Summary: PASS

Backscatter Coefficient: -80.0dB (1310 nm)
Backscatter Coefficient: -82.5dB (1550 nm)

OTDR End1 PASS

Test Limit: ANSI/TIA-568.3-D
Limits Version: 1.9500
Date / Time: 01/19/2018 10:15:05 AM
Operator: STEVEN
Tester: DTX-1800 (9421005 2.7800)
Module: DTX-OTDR-QMOD (1666506)
Calibration Date: 11/20/2017

Launch Only
Launch Type: Singlemode
Launch Length : 530.7 ft

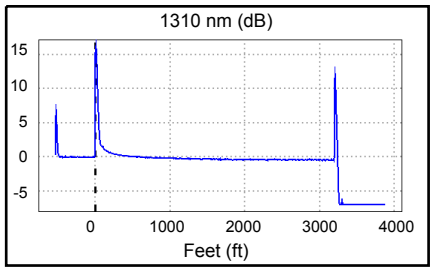

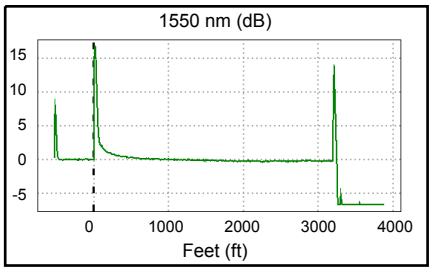

Overall Results	1310 nm	1550 nm	Limit
Overall Length (ft)	3199.5		13123
Overall Loss (dB)	0.45	0.32	
ORL (dB)	N/A	N/A	
Attn Coeff (dB/km)	0.43	0.53	

Settings (Auto OTDR)	1310 nm	1550 nm
Auto OTDR		
Range (Auto)	4547 ft	4550 ft
Resolution (Auto)	0.8 ft	0.4 ft
Pulse Width (Auto)	20 ns	20 ns
Averaging Time (Auto)	6 s	16 s
Loss Threshold (Auto)	0.15 dB	0.15 dB

	Loss (dB)			Reflectance (dB)			Attn Coeff (dB/km)		
Events	1310 nm	1550 nm	Limit	1310 nm	1550 nm	Limit	1310 nm	1550 nm	Limit
3199.5 ft End	N/A	N/A		-36.50	-36.21		0.43	0.53	
0.0 ft Launch Event	0.02	-0.20	0.75	> -25.02	> -28.53		N/A	N/A	
-530.7 ft OTDR Port	N/A	N/A		-48.12	-49.06		N/A	N/A	

LINKWARE™ PC
CABLE TEST MANAGEMENT SOFTWARE

Cable ID: BLACK STRAND-20

Date / Time: 01/19/2018 11:07:00 AM
Cable Type: OS2 Singlemode
End1 Name: NEW WATER WELL

n = 1.4660 (1310 nm)
n = 1.4670 (1550 nm)
End2 Name: WATER TREATMENT BUILDING

Test Summary: PASS

Backscatter Coefficient: -80.0dB (1310 nm)
Backscatter Coefficient: -82.5dB (1550 nm)

OTDR End2 PASS

Test Limit: ANSI/TIA-568.3-D
Limits Version: 1.9500
Date / Time: 01/19/2018 11:07:00 AM
Operator: STEVEN
Tester: DTX-1800 (9421005 2.7800)
Module: DTX-OTDR-QMOD (1666506)
Calibration Date: 11/20/2017

Launch Only
Launch Type: Singlemode
Launch Length : 530.8 ft

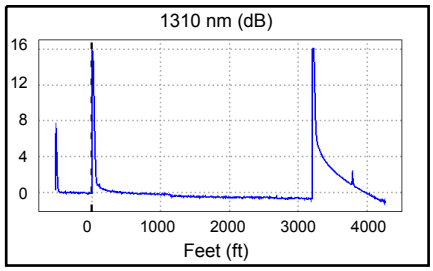

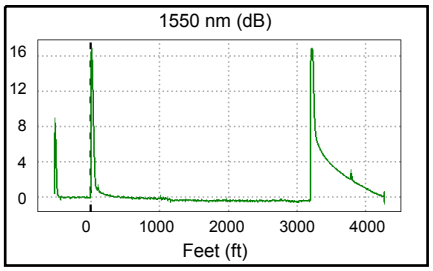

Overall Results	1310 nm	1550 nm	Limit
Overall Length (ft)	3198.6		13123
Overall Loss (dB)	0.64	0.39	
ORL (dB)	N/A	N/A	
Attn Coeff (dB/km)	0.53	0.30	

Settings (Auto OTDR)	1310 nm	1550 nm
Auto OTDR		
Range (Auto)	4933 ft	4935 ft
Resolution (Auto)	1.7 ft	0.8 ft
Pulse Width (Auto)	20 ns	20 ns
Averaging Time (Auto)	6 s	16 s
Loss Threshold (Auto)	0.15 dB	0.15 dB

	Loss (dB)			Reflectance (dB)			Attn Coeff (dB/km)		
Events	1310 nm	1550 nm	Limit	1310 nm	1550 nm	Limit	1310 nm	1550 nm	Limit
3198.6 ft End	N/A	N/A		> -21.86	> -23.03		0.46	0.12	
1135.6 ft Loss	0.18	0.18	0.30	N/A	N/A		0.65	0.63	
0.0 ft Launch Event	-0.06	-0.09	0.75	> -25.71	> -29.07		N/A	N/A	
-530.8 ft OTDR Port	N/A	N/A		-47.68	-48.55		N/A	N/A	

LINKWARE™ PC
CABLE TEST MANAGEMENT SOFTWARE

Cable ID: BLUE STRAND-1

Date / Time: 01/19/2018 10:04:55 AM
Cable Type: OS2 Singlemode
End1 Name: NEW WATER WELL

n = 1.4660 (1310 nm)
n = 1.4670 (1550 nm)
End2 Name: WATER TREATMENT BUILDING

Test Summary: PASS

Backscatter Coefficient: -80.0dB (1310 nm)
Backscatter Coefficient: -82.5dB (1550 nm)

OTDR End1 PASS

Test Limit: ANSI/TIA-568.3-D
Limits Version: 1.9500
Date / Time: 01/19/2018 10:04:56 AM
Operator: STEVEN
Tester: DTX-1800 (9421005 2.7800)
Module: DTX-OTDR-QMOD (1666506)
Calibration Date: 11/20/2017

Launch Only
Launch Type: Singlemode
Launch Length : 530.8 ft

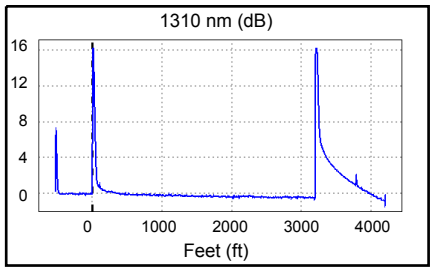

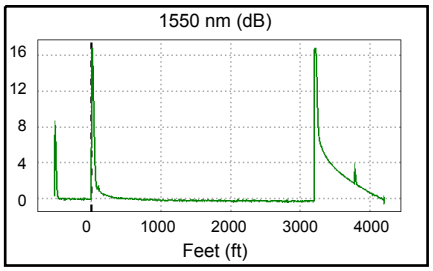

Overall Results	1310 nm	1550 nm	Limit
Overall Length (ft)	3199.5		13123
Overall Loss (dB)	0.43	0.27	
ORL (dB)	N/A	N/A	
Attn Coeff (dB/km)	0.46	0.29	

Settings (Auto OTDR)	1310 nm	1550 nm
Auto OTDR		
Range (Auto)	4846 ft	4875 ft
Resolution (Auto)	0.8 ft	0.8 ft
Pulse Width (Auto)	20 ns	20 ns
Averaging Time (Auto)	8 s	14 s
Loss Threshold (Auto)	0.15 dB	0.15 dB

	Loss (dB)			Reflectance (dB)			Attn Coeff (dB/km)		
Events	1310 nm	1550 nm	Limit	1310 nm	1550 nm	Limit	1310 nm	1550 nm	Limit
3199.5 ft End	N/A	N/A		> -22.28	> -23.51		0.46	0.29	
0.0 ft Launch Event	-0.01	-0.01	0.75	> -25.60	> -29.11		N/A	N/A	
-530.8 ft OTDR Port	N/A	N/A		-48.01	-49.02		N/A	N/A	

LINKWARE™ PC
CABLE TEST MANAGEMENT SOFTWARE

Cable ID: BLUE STRAND-13

Date / Time: 01/19/2018 10:52:50 AM
Cable Type: OS2 Singlemode
End1 Name: NEW WATER WELL

n = 1.4660 (1310 nm)
n = 1.4670 (1550 nm)
End2 Name: WATER TREATMENT BUILDING

Test Summary: PASS

Backscatter Coefficient: -80.0dB (1310 nm)
Backscatter Coefficient: -82.5dB (1550 nm)

OTDR End2 PASS

Test Limit: ANSI/TIA-568.3-D
Limits Version: 1.9500
Date / Time: 01/19/2018 10:52:50 AM
Operator: STEVEN
Tester: DTX-1800 (9421005 2.7800)
Module: DTX-OTDR-QMOD (1666506)
Calibration Date: 11/20/2017

Launch Only
Launch Type: Singlemode
Launch Length : 530.8 ft

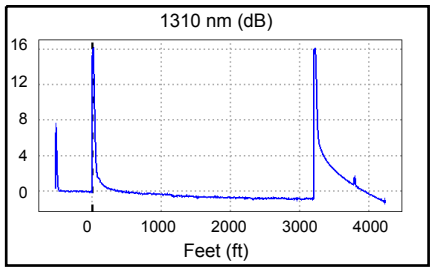

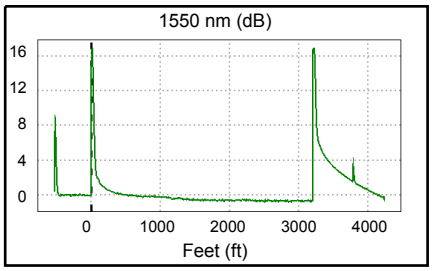

Overall Results	1310 nm	1550 nm	Limit
Overall Length (ft)	3200.3		13123
Overall Loss (dB)	0.87	0.70	
ORL (dB)	N/A	N/A	
Attn Coeff (dB/km)	0.69	0.70	

Settings (Auto OTDR)	1310 nm	1550 nm
Auto OTDR		
Range (Auto)	4889 ft	4904 ft
Resolution (Auto)	1.7 ft	1.7 ft
Pulse Width (Auto)	20 ns	20 ns
Averaging Time (Auto)	7 s	10 s
Loss Threshold (Auto)	0.15 dB	0.15 dB

	Loss (dB)			Reflectance (dB)			Attn Coeff (dB/km)		
Events	1310 nm	1550 nm	Limit	1310 nm	1550 nm	Limit	1310 nm	1550 nm	Limit
3200.3 ft End	N/A	N/A		> -21.53	> -22.50		0.52	0.37	
1141.5 ft Loss	0.18	0.19	0.30	N/A	N/A		0.98	1.29	
0.0 ft Launch Event	0.01	-0.16	0.75	> -25.05	> -28.29		N/A	N/A	
-530.8 ft OTDR Port	N/A	N/A		-47.70	-48.72		N/A	N/A	

LINKWARE™ PC
CABLE TEST MANAGEMENT SOFTWARE

Cable ID: BROWN STRAND-4

Date / Time: 01/19/2018 10:07:40 AM
Cable Type: OS2 Singlemode
End1 Name: NEW WATER WELL

n = 1.4660 (1310 nm)
n = 1.4670 (1550 nm)
End2 Name: WATER TREATMENT BUILDING

Test Summary: PASS

Backscatter Coefficient: -80.0dB (1310 nm)
Backscatter Coefficient: -82.5dB (1550 nm)

OTDR End1 PASS

Test Limit: ANSI/TIA-568.3-D
Limits Version: 1.9500
Date / Time: 01/19/2018 10:07:40 AM
Operator: STEVEN
Tester: DTX-1800 (9421005 2.7800)
Module: DTX-OTDR-QMOD (1666506)
Calibration Date: 11/20/2017

Launch Only
Launch Type: Singlemode
Launch Length : 530.8 ft

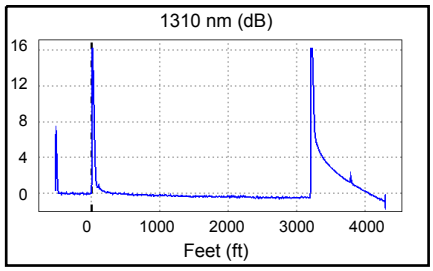

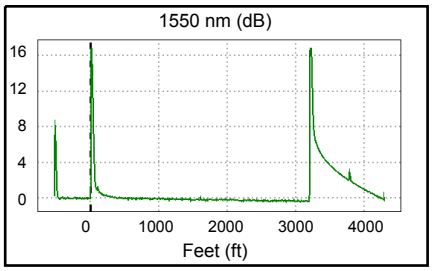

Overall Results	1310 nm	1550 nm	Limit
Overall Length (ft)	3198.6		13123
Overall Loss (dB)	0.52	0.32	
ORL (dB)	N/A	N/A	
Attn Coeff (dB/km)	0.52	0.39	

Settings (Auto OTDR)	1310 nm	1550 nm
Auto OTDR		
Range (Auto)	4875 ft	4960 ft
Resolution (Auto)	0.8 ft	0.8 ft
Pulse Width (Auto)	20 ns	20 ns
Averaging Time (Auto)	9 s	15 s
Loss Threshold (Auto)	0.15 dB	0.15 dB

	Loss (dB)			Reflectance (dB)			Attn Coeff (dB/km)		
Events	1310 nm	1550 nm	Limit	1310 nm	1550 nm	Limit	1310 nm	1550 nm	Limit
3198.6 ft End	N/A	N/A		> -22.02	> -23.37		0.52	0.39	
0.0 ft Launch Event	0.02	-0.07	0.75	> -25.58	> -29.13		N/A	N/A	
-530.8 ft OTDR Port	N/A	N/A		-47.93	-48.99		N/A	N/A	

LINKWARE™PC
CABLE TEST MANAGEMENT SOFTWARE

Cable ID: BROWN STRAND-16

Date / Time: 01/19/2018 10:58:31 AM
Cable Type: OS2 Singlemode
End1 Name: NEW WATER WELL

n = 1.4660 (1310 nm)
n = 1.4670 (1550 nm)
End2 Name: WATER TREATMENT BUILDING

Test Summary: PASS

Backscatter Coefficient: -80.0dB (1310 nm)
Backscatter Coefficient: -82.5dB (1550 nm)

OTDR End2 PASS

Test Limit: ANSI/TIA-568.3-D
Limits Version: 1.9500
Date / Time: 01/19/2018 10:58:31 AM
Operator: STEVEN
Tester: DTX-1800 (9421005 2.7800)
Module: DTX-OTDR-QMOD (1666506)
Calibration Date: 11/20/2017

Launch Only
Launch Type: Singlemode
Launch Length : 530.0 ft

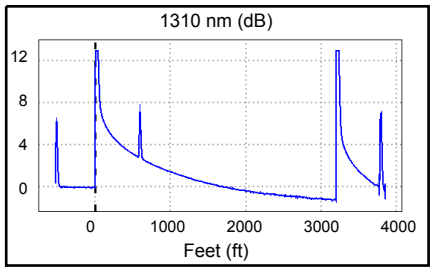

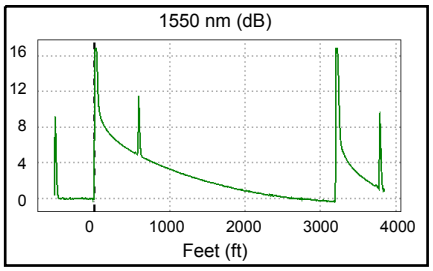

Overall Results	1310 nm	1550 nm	Limit
Overall Length (ft)	3199.2		13123
Overall Loss (dB)	1.15	0.27	
ORL (dB)	N/A	N/A	
Attn Coeff (dB/km)	1.52	N/A	

Settings (Auto OTDR)	1310 nm	1550 nm
Auto OTDR		
Range (Auto)	4520 ft	4513 ft
Resolution (Auto)	0.2 ft	1.7 ft
Pulse Width (Auto)	40 ns	20 ns
Averaging Time (Auto)	6 s	10 s
Loss Threshold (Auto)	0.15 dB	0.15 dB

Events	Loss (dB) 1310 nm	Loss (dB) 1550 nm	Loss (dB) Limit	Reflectance (dB) 1310 nm	Reflectance (dB) 1550 nm	Reflectance (dB) Limit	Attn Coeff (dB/km) 1310 nm	Attn Coeff (dB/km) 1550 nm	Attn Coeff (dB/km) Limit
3199.2 ft End	N/A	N/A		> -25.76	> -23.36		1.52	N/A	
578.9 ft Ghost	N/A	N/A		-47.58	-43.87		N/A	N/A	
0.0 ft Launch Event	-0.06	-1.83	0.75	> -28.72	> -27.25		0.45	N/A	
-530.0 ft OTDR Port	N/A	N/A		-46.52	-48.70		N/A	N/A	

-WARNING: Negative Loss value found in test result.

LINKWARE™ PC
CABLE TEST MANAGEMENT SOFTWARE

Cable ID: GREEN STRAND-3

Date / Time: 01/19/2018 10:06:31 AM
Cable Type: OS2 Singlemode
End1 Name: NEW WATER WELL

n = 1.4660 (1310 nm)
n = 1.4670 (1550 nm)
End2 Name: WATER TREATMENT BUILDING

Test Summary: PASS

Backscatter Coefficient: -80.0dB (1310 nm)
Backscatter Coefficient: -82.5dB (1550 nm)

OTDR End1 PASS

Test Limit: ANSI/TIA-568.3-D
Limits Version: 1.9500
Date / Time: 01/19/2018 10:06:31 AM
Operator: STEVEN
Tester: DTX-1800 (9421005 2.7800)
Module: DTX-OTDR-QMOD (1666506)
Calibration Date: 11/20/2017

Launch Only
Launch Type: Singlemode
Launch Length : 530.8 ft

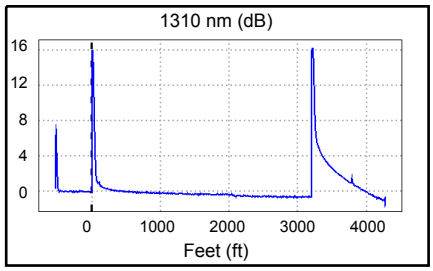

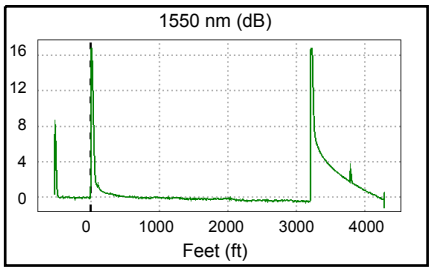

Overall Results	1310 nm	1550 nm	Limit
Overall Length (ft)	3198.6		13123
Overall Loss (dB)	0.62	0.43	
ORL (dB)	N/A	N/A	
Attn Coeff (dB/km)	0.38	0.64	

Settings (Auto OTDR)	1310 nm	1550 nm
Auto OTDR		
Range (Auto)	4876 ft	4946 ft
Resolution (Auto)	1.7 ft	0.8 ft
Pulse Width (Auto)	20 ns	20 ns
Averaging Time (Auto)	5 s	15 s
Loss Threshold (Auto)	0.15 dB	0.15 dB

	Loss (dB)			Reflectance (dB)			Attn Coeff (dB/km)		
Events	1310 nm	1550 nm	Limit	1310 nm	1550 nm	Limit	1310 nm	1550 nm	Limit
3198.6 ft End	N/A	N/A		> -21.86	> -23.19		0.38	0.64	
0.0 ft Launch Event	0.24	-0.19	0.75	> -25.22	> -28.90		N/A	N/A	
-530.8 ft OTDR Port	N/A	N/A		-48.05	-49.01		N/A	N/A	

LINKWARE™PC
CABLE TEST MANAGEMENT SOFTWARE

Cable ID: GREEN STRAND-15

Date / Time: 01/19/2018 10:56:56 AM
Cable Type: OS2 Singlemode
End1 Name: NEW WATER WELL

n = 1.4660 (1310 nm)
n = 1.4670 (1550 nm)
End2 Name: WATER TREATMENT BUILDING

Test Summary: PASS

Backscatter Coefficient: -80.0dB (1310 nm)
Backscatter Coefficient: -82.5dB (1550 nm)

OTDR End2 PASS

Test Limit: ANSI/TIA-568.3-D
Limits Version: 1.9500
Date / Time: 01/19/2018 10:56:56 AM
Operator: STEVEN
Tester: DTX-1800 (9421005 2.7800)
Module: DTX-OTDR-QMOD (1666506)
Calibration Date: 11/20/2017

Launch Only
Launch Type: Singlemode
Launch Length : 530.7 ft

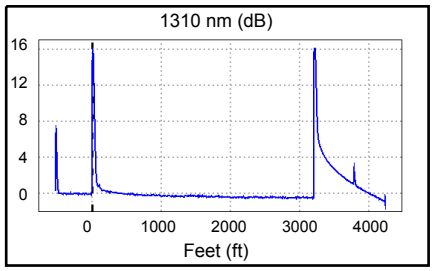

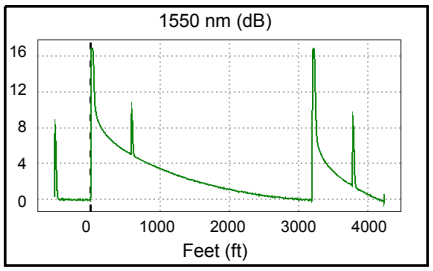

Overall Results	1310 nm	1550 nm	Limit
Overall Length (ft)	3198.6		13123
Overall Loss (dB)	0.48	0.04	
ORL (dB)	N/A	N/A	
Attn Coeff (dB/km)	0.45	N/A	

Settings (Auto OTDR)	1310 nm	1550 nm
Auto OTDR		
Range (Auto)	4903 ft	4906 ft
Resolution (Auto)	0.8 ft	0.8 ft
Pulse Width (Auto)	20 ns	20 ns
Averaging Time (Auto)	9 s	15 s
Loss Threshold (Auto)	0.15 dB	0.15 dB

	Loss (dB)			Reflectance (dB)			Attn Coeff (dB/km)		
Events	1310 nm	1550 nm	Limit	1310 nm	1550 nm	Limit	1310 nm	1550 nm	Limit
3198.6 ft End	N/A	N/A		> -22.23	> -23.76		0.45	N/A	
578.3 ft Ghost		N/A			> -44.76			N/A	
0.0 ft Launch Event	0.03	-2.52	0.75	> -25.62	> -27.45		N/A	N/A	
-530.7 ft OTDR Port	N/A	N/A		-47.60	-48.60		N/A	N/A	

-WARNING: Negative Loss value found in test result.

LINKWARE™ PC
CABLE TEST MANAGEMENT SOFTWARE

Cable ID: ORANGE STRAND-2

Date / Time: 01/19/2018 10:03:15 AM
Cable Type: OS2 Singlemode
End1 Name: NEW WATER WELL

n = 1.4660 (1310 nm)
n = 1.4670 (1550 nm)
End2 Name: WATER TREATMENT BUILDING

Test Summary: PASS

Backscatter Coefficient: -80.0dB (1310 nm)
Backscatter Coefficient: -82.5dB (1550 nm)

OTDR End1 PASS

Test Limit: ANSI/TIA-568.3-D
Limits Version: 1.9500
Date / Time: 01/19/2018 10:03:15 AM
Operator: STEVEN
Tester: DTX-1800 (9421005 2.7800)
Module: DTX-OTDR-QMOD (1666506)
Calibration Date: 11/20/2017

Launch Only
Launch Type: Singlemode
Launch Length : 530.0 ft

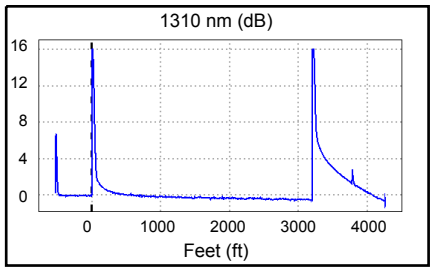

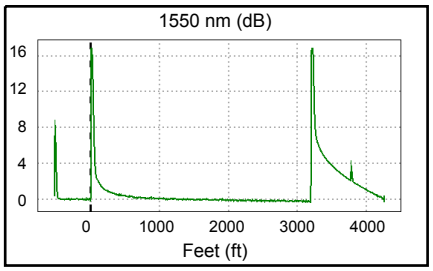

Overall Results	1310 nm	1550 nm	Limit
Overall Length (ft)	3199.5		13123
Overall Loss (dB)	0.49	0.26	
ORL (dB)	N/A	N/A	
Attn Coeff (dB/km)	0.60	0.47	

Settings (Auto OTDR)	1310 nm	1550 nm
Auto OTDR		
Range (Auto)	4875 ft	4932 ft
Resolution (Auto)	0.8 ft	0.8 ft
Pulse Width (Auto)	20 ns	20 ns
Averaging Time (Auto)	8 s	14 s
Loss Threshold (Auto)	0.15 dB	0.15 dB

	Loss (dB)			Reflectance (dB)			Attn Coeff (dB/km)		
Events	1310 nm	1550 nm	Limit	1310 nm	1550 nm	Limit	1310 nm	1550 nm	Limit
3199.5 ft End	N/A	N/A		> -22.13	> -23.44		0.60	0.47	
0.0 ft Launch Event	-0.10	-0.19	0.75	> -25.03	> -28.31		N/A	N/A	
-530.0 ft OTDR Port	N/A	N/A		-48.10	-48.99		N/A	N/A	

LINKWARE™PC
CABLE TEST MANAGEMENT SOFTWARE

Cable ID: ORANGE STRAND-14

Date / Time: 01/19/2018 10:55:04 AM
Cable Type: OS2 Singlemode
End1 Name: NEW WATER WELL

n = 1.4660 (1310 nm)
n = 1.4670 (1550 nm)
End2 Name: WATER TREATMENT BUILDING

Test Summary: PASS

Backscatter Coefficient: -80.0dB (1310 nm)
Backscatter Coefficient: -82.5dB (1550 nm)

OTDR End2 PASS

Test Limit: ANSI/TIA-568.3-D
Limits Version: 1.9500
Date / Time: 01/19/2018 10:55:04 AM
Operator: STEVEN
Tester: DTX-1800 (9421005 2.7800)
Module: DTX-OTDR-QMOD (1666506)
Calibration Date: 11/20/2017

Launch Only
Launch Type: Singlemode
Launch Length : 530.8 ft

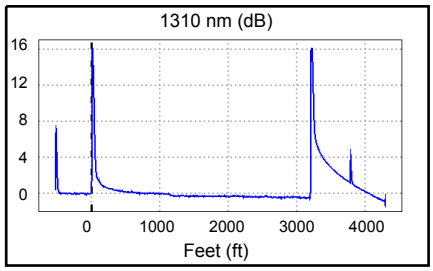

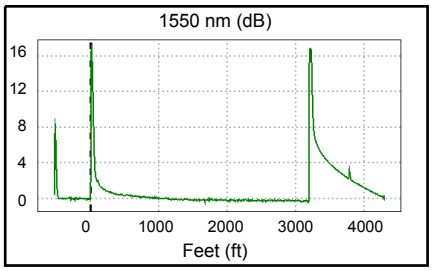

Overall Results	1310 nm	1550 nm	Limit
Overall Length (ft)	3198.6		13123
Overall Loss (dB)	0.46	0.25	
ORL (dB)	N/A	N/A	
Attn Coeff (dB/km)	0.50	0.86	

Settings (Auto OTDR)	1310 nm	1550 nm
Auto OTDR		
Range (Auto)	4960 ft	4963 ft
Resolution (Auto)	0.8 ft	0.8 ft
Pulse Width (Auto)	20 ns	20 ns
Averaging Time (Auto)	9 s	15 s
Loss Threshold (Auto)	0.15 dB	0.15 dB

	Loss (dB)			Reflectance (dB)			Attn Coeff (dB/km)		
Events	1310 nm	1550 nm	Limit	1310 nm	1550 nm	Limit	1310 nm	1550 nm	Limit
3198.6 ft End	N/A	N/A		> -22.23	> -23.33		0.41	0.86	
1135.5 ft Loss	0.18		0.30	N/A			0.67		
0.0 ft Launch Event	-0.21	-0.59	0.75	> -25.10	> -28.31		N/A	N/A	
-530.8 ft OTDR Port	N/A	N/A		-47.57	-48.62		N/A	N/A	

-WARNING: Negative Loss value found in test result.

LINKWARE™ PC
CABLE TEST MANAGEMENT SOFTWARE

Cable ID: RED STRAND-7

Date / Time: 01/19/2018 09:58:30 AM
Cable Type: OS2 Singlemode
End1 Name: NEW WATER WELL

n = 1.4660 (1310 nm)
n = 1.4670 (1550 nm)
End2 Name: WATER TREATMENT BUILDING

Test Summary: PASS

Backscatter Coefficient: -80.0dB (1310 nm)
Backscatter Coefficient: -82.5dB (1550 nm)

OTDR End1 PASS

Test Limit: ANSI/TIA-568.3-D
Limits Version: 1.9500
Date / Time: 01/19/2018 09:58:31 AM
Operator: STEVEN
Tester: DTX-1800 (9421005 2.7800)
Module: DTX-OTDR-QMOD (1666506)
Calibration Date: 11/20/2017

Launch Only
Launch Type: Singlemode
Launch Length : 530.0 ft

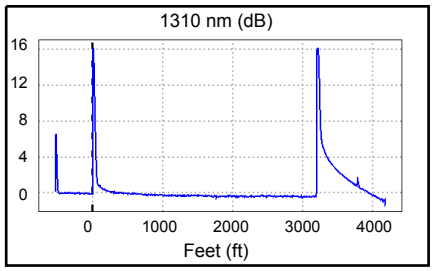

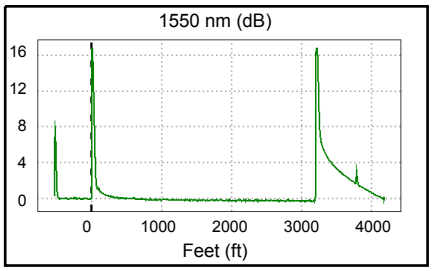

Overall Results	1310 nm	1550 nm	Limit
Overall Length (ft)	3200.3		13123
Overall Loss (dB)	0.36	0.29	
ORL (dB)	N/A	N/A	
Attn Coeff (dB/km)	0.28	0.30	

Settings (Auto OTDR)	1310 nm	1550 nm
Auto OTDR		
Range (Auto)	4846 ft	4849 ft
Resolution (Auto)	0.8 ft	0.8 ft
Pulse Width (Auto)	20 ns	20 ns
Averaging Time (Auto)	8 s	13 s
Loss Threshold (Auto)	0.15 dB	0.15 dB

	Loss (dB)			Reflectance (dB)			Attn Coeff (dB/km)		
Events	1310 nm	1550 nm	Limit	1310 nm	1550 nm	Limit	1310 nm	1550 nm	Limit
3200.3 ft End	N/A	N/A		> -22.46	> -23.54		0.28	0.30	
0.0 ft Launch Event	0.08	-0.01	0.75	> -25.51	> -29.17		N/A	N/A	
-530.0 ft OTDR Port	N/A	N/A		-48.31	-49.24		N/A	N/A	

LINKWARE™PC
CABLE TEST MANAGEMENT SOFTWARE

Cable ID: RED STRAND-19

Date / Time: 01/19/2018 11:03:57 AM
Cable Type: OS2 Singlemode
End1 Name: NEW WATER WELL

n = 1.4660 (1310 nm)
n = 1.4670 (1550 nm)
End2 Name: WATER TREATMENT BUILDING

Test Summary: PASS

Backscatter Coefficient: -80.0dB (1310 nm)
Backscatter Coefficient: -82.5dB (1550 nm)

OTDR End2 PASS

Test Limit: ANSI/TIA-568.3-D
Limits Version: 1.9500
Date / Time: 01/19/2018 11:03:57 AM
Operator: STEVEN
Tester: DTX-1800 (9421005 2.7800)
Module: DTX-OTDR-QMOD (1666506)
Calibration Date: 11/20/2017

Launch Only
Launch Type: Singlemode
Launch Length : 529.8 ft

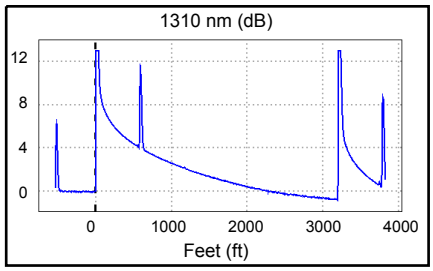

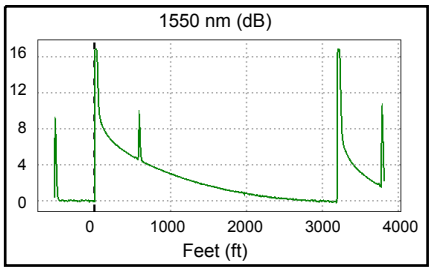

Overall Results	1310 nm	1550 nm	Limit
Overall Length (ft)	3198.4		13123
Overall Loss (dB)	0.71	0.15	
ORL (dB)	N/A	N/A	
Attn Coeff (dB/km)	N/A	2.00	

Settings (Auto OTDR)	1310 nm	1550 nm
Auto OTDR		
Range (Auto)	4477 ft	4482 ft
Resolution (Auto)	0.2 ft	1.7 ft
Pulse Width (Auto)	40 ns	20 ns
Averaging Time (Auto)	5 s	10 s
Loss Threshold (Auto)	0.15 dB	0.15 dB

Events	Loss (dB) 1310 nm	Loss (dB) 1550 nm	Loss (dB) Limit	Reflectance (dB) 1310 nm	Reflectance (dB) 1550 nm	Reflectance (dB) Limit	Attn Coeff (dB/km) 1310 nm	Attn Coeff (dB/km) 1550 nm	Attn Coeff (dB/km) Limit
3198.4 ft End	N/A	N/A		> -26.58	> -23.52		N/A	2.00	
578.5 ft Ghost	N/A	N/A		-37.26	> -47.39		N/A	N/A	
0.0 ft Launch Event	-1.34	-1.80	0.75	> -28.69	> -27.23		N/A	N/A	
-529.8 ft OTDR Port	N/A	N/A		-46.47	-48.64		N/A	N/A	

-WARNING: Negative Loss value found in test result.

LINKWARE™PC
CABLE TEST MANAGEMENT SOFTWARE

Cable ID: ROSE STRAND-11

Date / Time: 01/19/2018 10:29:58 AM
Cable Type: OS2 Singlemode
End1 Name: NEW WATER WELL

n = 1.4660 (1310 nm)
n = 1.4670 (1550 nm)
End2 Name: WATER TREATMENT BUILDING

Test Summary: PASS

Backscatter Coefficient: -80.0dB (1310 nm)
Backscatter Coefficient: -82.5dB (1550 nm)

OTDR End1 PASS

Test Limit: ANSI/TIA-568.3-D
Limits Version: 1.9500
Date / Time: 01/19/2018 10:29:58 AM
Operator: STEVEN
Tester: DTX-1800 (9421005 2.7800)
Module: DTX-OTDR-QMOD (1666506)
Calibration Date: 11/20/2017

Launch Only
Launch Type: Singlemode
Launch Length : 530.7 ft

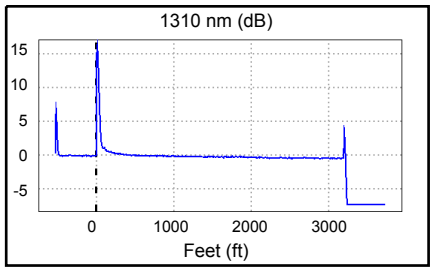

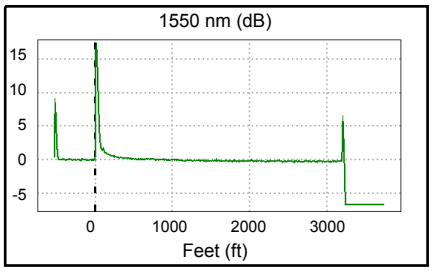

Overall Results	1310 nm	1550 nm	Limit
Overall Length (ft)	3198.6		13123
Overall Loss (dB)	0.39	0.27	
ORL (dB)	N/A	N/A	
Attn Coeff (dB/km)	0.51	0.32	

Settings (Auto OTDR)	1310 nm	1550 nm
Auto OTDR		
Range (Auto)	4268 ft	4410 ft
Resolution (Auto)	0.8 ft	0.4 ft
Pulse Width (Auto)	20 ns	20 ns
Averaging Time (Auto)	6 s	18 s
Loss Threshold (Auto)	0.15 dB	0.15 dB

	Loss (dB)			Reflectance (dB)			Attn Coeff (dB/km)		
Events	1310 nm	1550 nm	Limit	1310 nm	1550 nm	Limit	1310 nm	1550 nm	Limit
3198.6 ft End	N/A	N/A		-55.20	-52.63		0.51	0.32	
0.0 ft Launch Event	-0.11	-0.04	0.75	> -25.36	> -28.67		N/A	N/A	
-530.7 ft OTDR Port	N/A	N/A		-47.82	-48.74		N/A	N/A	

LINKWARE™ PC
CABLE TEST MANAGEMENT SOFTWARE

Cable ID: ROSE STRAND-23

Date / Time: 01/19/2018 11:15:24 AM
Cable Type: OS2 Singlemode
End1 Name: NEW WATER WELL

n = 1.4660 (1310 nm)
n = 1.4670 (1550 nm)
End2 Name: WATER TREATMENT BUILDING

Test Summary: PASS

Backscatter Coefficient: -80.0dB (1310 nm)
Backscatter Coefficient: -82.5dB (1550 nm)

OTDR End2 PASS

Test Limit: ANSI/TIA-568.3-D
Limits Version: 1.9500
Date / Time: 01/19/2018 11:15:24 AM
Operator: STEVEN
Tester: DTX-1800 (9421005 2.7800)
Module: DTX-OTDR-QMOD (1666506)
Calibration Date: 11/20/2017

Launch Only
Launch Type: Singlemode
Launch Length : 530.8 ft

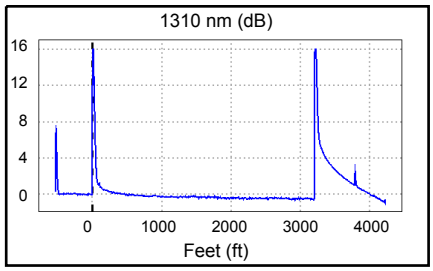

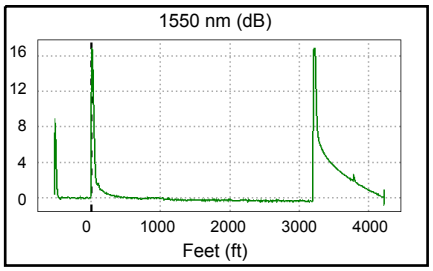

Overall Results	1310 nm	1550 nm	Limit
Overall Length (ft)	3198.6		13123
Overall Loss (dB)	0.55	0.37	
ORL (dB)	N/A	N/A	
Attn Coeff (dB/km)	0.46	0.36	

Settings (Auto OTDR)	1310 nm	1550 nm
Auto OTDR		
Range (Auto)	4889 ft	4892 ft
Resolution (Auto)	0.8 ft	0.8 ft
Pulse Width (Auto)	20 ns	20 ns
Averaging Time (Auto)	9 s	14 s
Loss Threshold (Auto)	0.15 dB	0.15 dB

	Loss (dB)			Reflectance (dB)			Attn Coeff (dB/km)		
Events	1310 nm	1550 nm	Limit	1310 nm	1550 nm	Limit	1310 nm	1550 nm	Limit
3198.6 ft End	N/A	N/A		> -22.06	> -23.13		0.46	0.36	
0.0 ft Launch Event	0.10	0.02	0.75	> -25.29	> -28.65		N/A	N/A	
-530.8 ft OTDR Port	N/A	N/A		-47.53	-48.55		N/A	N/A	

LINKWARE™ PC
CABLE TEST MANAGEMENT SOFTWARE

Cable ID: SLATE STRAND-5

Date / Time: 01/19/2018 10:10:06 AM
Cable Type: OS2 Singlemode
End1 Name: NEW WATER WELL

n = 1.4660 (1310 nm)
n = 1.4670 (1550 nm)
End2 Name: WATER TREATMENT BUILDING

Test Summary: PASS

Backscatter Coefficient: -80.0dB (1310 nm)
Backscatter Coefficient: -82.5dB (1550 nm)

OTDR End1 PASS

Test Limit: ANSI/TIA-568.3-D
Limits Version: 1.9500
Date / Time: 01/19/2018 10:10:07 AM
Operator: STEVEN
Tester: DTX-1800 (9421005 2.7800)
Module: DTX-OTDR-QMOD (1666506)
Calibration Date: 11/20/2017

Launch Only
Launch Type: Singlemode
Launch Length : 530.8 ft

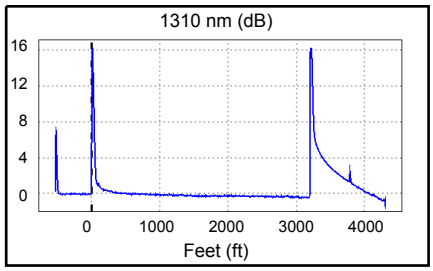

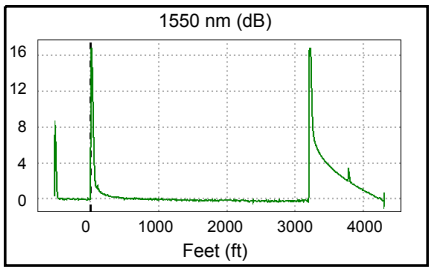

Overall Results	1310 nm	1550 nm	Limit
Overall Length (ft)	3198.6		13123
Overall Loss (dB)	0.36	0.26	
ORL (dB)	N/A	N/A	
Attn Coeff (dB/km)	0.44	0.40	

Settings (Auto OTDR)	1310 nm	1550 nm
Auto OTDR		
Range (Auto)	4875 ft	4974 ft
Resolution (Auto)	0.8 ft	0.8 ft
Pulse Width (Auto)	20 ns	20 ns
Averaging Time (Auto)	8 s	14 s
Loss Threshold (Auto)	0.15 dB	0.15 dB

	Loss (dB)			Reflectance (dB)			Attn Coeff (dB/km)		
Events	1310 nm	1550 nm	Limit	1310 nm	1550 nm	Limit	1310 nm	1550 nm	Limit
3198.6 ft End	N/A	N/A		> -22.28	> -23.47		0.44	0.40	
0.0 ft Launch Event	-0.08	-0.13	0.75	> -25.34	> -28.92		N/A	N/A	
-530.8 ft OTDR Port	N/A	N/A		-47.95	-48.97		N/A	N/A	

LINKWARE™ PC
CABLE TEST MANAGEMENT SOFTWARE

Cable ID: SLATE STRAND-17

Date / Time: 01/19/2018 11:00:17 AM
Cable Type: OS2 Singlemode
End1 Name: NEW WATER WELL

n = 1.4660 (1310 nm)
n = 1.4670 (1550 nm)
End2 Name: WATER TREATMENT BUILDING

Test Summary: PASS

Backscatter Coefficient: -80.0dB (1310 nm)
Backscatter Coefficient: -82.5dB (1550 nm)

OTDR End2 PASS

Test Limit: ANSI/TIA-568.3-D
Limits Version: 1.9500
Date / Time: 01/19/2018 11:00:17 AM
Operator: STEVEN
Tester: DTX-1800 (9421005 2.7800)
Module: DTX-OTDR-QMOD (1666506)
Calibration Date: 11/20/2017

Launch Only
Launch Type: Singlemode
Launch Length : 530.8 ft

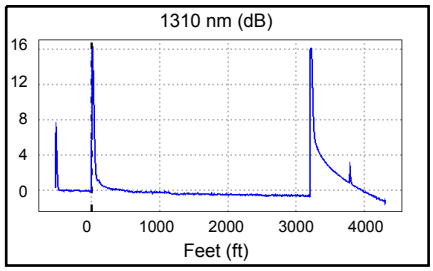

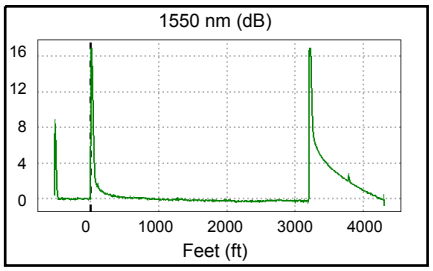

Overall Results	1310 nm	1550 nm	Limit
Overall Length (ft)	3198.6		13123
Overall Loss (dB)	0.54	0.28	
ORL (dB)	N/A	N/A	
Attn Coeff (dB/km)	0.39	0.47	

Settings (Auto OTDR)	1310 nm	1550 nm
Auto OTDR		
Range (Auto)	4876 ft	4974 ft
Resolution (Auto)	1.7 ft	0.8 ft
Pulse Width (Auto)	20 ns	20 ns
Averaging Time (Auto)	6 s	15 s
Loss Threshold (Auto)	0.15 dB	0.15 dB

	Loss (dB)			Reflectance (dB)			Attn Coeff (dB/km)		
Events	1310 nm	1550 nm	Limit	1310 nm	1550 nm	Limit	1310 nm	1550 nm	Limit
3198.6 ft End	N/A	N/A		> -22.10	> -23.29		0.39	0.47	
0.0 ft Launch Event	0.16	-0.18	0.75	> -25.17	> -28.66		N/A	N/A	
-530.8 ft OTDR Port	N/A	N/A		-47.71	-48.60		N/A	N/A	

LINKWARE™ PC
CABLE TEST MANAGEMENT SOFTWARE

Cable ID: STRAND-1

Test Summary: PASS

Date / Time: 01/19/2018 09:14:54 AM
Cable Type: OS2 Singlemode

n = 1.4660 (1310 nm)
n = 1.4670 (1550 nm)

Loss (R->M)

PASS

Date / Time: 01/19/2018 09:14:54 AM
Test Limit: TIA-568.3-D OSP (OS2)
Limits Version: 1.9500
Operator: STEVEN
DTX-1800 (9421005 v2.7800)
Module: DTX-SFM2(9742077)
Calibration Date: 06/09/2017
DTX-1800R (9421006 v2.7800)
Module: DTX-SFM2(9738095)
Calibration Date: 06/09/2017

Propagation Delay (ns)	4745	
Length ft	3183	PASS
Limit 131234		
	1310 nm	1550 nm
Result	PASS	PASS
Loss (dB)	1.95	1.58
Limit (dB)	2.19	2.19
Margin (dB)	0.24	0.61
Reference (dBm)	-6.35	-6.80

Number of Adapters: 2
Number of Splices: 1
Patch Type: OS2 Singlemode
Patch Length1 (ft): 3
Patch Length2 (ft): 3
Reference Date: 01/19/2018 07:54:26 AM
1 Jumper

Loss (M->R)

PASS

	1310 nm	1550 nm
Result	PASS	PASS
Loss (dB)	0.95	0.91
Limit (dB)	2.19	2.19
Margin (dB)	1.24	1.28
Reference (dBm)	-5.88	-5.37

Compliant Network Standards:

1000BASE-LX	100GBASE-ER4	100GBASE-LR4
10GBASE-E	10GBASE-L	10GBASE-LX4
40GBASE-ER4	40GBASE-FR	40GBASE-LR4
Fibre Channel 100-SM-LC-L	Fibre Channel 1200-SM-LC-L	Fibre Channel 1600-SM-LC-L
Fibre Channel 200-SM-LC-L	Fibre Channel 400-SM-LC-L	Fibre Channel 400-SM-LC-M
Fibre Channel 800-SM-LC-I	Fibre Channel 800-SM-LC-L	

LINKWARE™ PC
CABLE TEST MANAGEMENT SOFTWARE

Cable ID: STRAND-2

Test Summary: PASS

Date / Time: 01/19/2018 09:14:54 AM
Cable Type: OS2 Singlemode

n = 1.4660 (1310 nm)
n = 1.4670 (1550 nm)

Loss (R->M)

PASS

Date / Time: 01/19/2018 09:14:54 AM
Test Limit: TIA-568.3-D OSP (OS2)
Limits Version: 1.9500
Operator: STEVEN
DTX-1800 (9421005 v2.7800)
Module: DTX-SFM2(9742077)
Calibration Date: 06/09/2017
DTX-1800R (9421006 v2.7800)
Module: DTX-SFM2(9738095)
Calibration Date: 06/09/2017

Propagation Delay (ns)	4745	
Length ft	3183	PASS
Limit 131234		
	1310 nm	1550 nm
Result	PASS	PASS
Loss (dB)	1.77	1.20
Limit (dB)	2.19	2.19
Margin (dB)	0.42	0.99
Reference (dBm)	-6.35	-6.80

Number of Adapters: 2
Number of Splices: 1
Patch Type: OS2 Singlemode
Patch Length1 (ft): 3
Patch Length2 (ft): 3
Reference Date: 01/19/2018 07:54:26 AM
1 Jumper

Loss (M->R)

PASS

	1310 nm	1550 nm
Result	PASS	PASS
Loss (dB)	0.65	0.43
Limit (dB)	2.19	2.19
Margin (dB)	1.54	1.76
Reference (dBm)	-5.88	-5.37

Compliant Network Standards:

1000BASE-LX	100GBASE-ER4	100GBASE-LR4
10GBASE-E	10GBASE-L	10GBASE-LX4
40GBASE-ER4	40GBASE-FR	40GBASE-LR4
Fibre Channel 100-SM-LC-L	Fibre Channel 1200-SM-LC-L	Fibre Channel 1600-SM-LC-L
Fibre Channel 200-SM-LC-L	Fibre Channel 400-SM-LC-L	Fibre Channel 400-SM-LC-M
Fibre Channel 800-SM-LC-I	Fibre Channel 800-SM-LC-L	

LINKWARE™ PC
CABLE TEST MANAGEMENT SOFTWARE

Cable ID: STRAND-3

Test Summary: PASS

Date / Time: 01/19/2018 09:24:32 AM
Cable Type: OS2 Singlemode

n = 1.4660 (1310 nm)
n = 1.4670 (1550 nm)

Loss (R->M)

PASS

Date / Time: 01/19/2018 09:24:32 AM
Test Limit: TIA-568.3-D OSP (OS2)
Limits Version: 1.9500
Operator: STEVEN
DTX-1800 (9421005 v2.7800)
Module: DTX-SFM2(9742077)
Calibration Date: 06/09/2017
DTX-1800R (9421006 v2.7800)
Module: DTX-SFM2(9738095)
Calibration Date: 06/09/2017

Propagation Delay (ns)	4739	
Length ft	3179	PASS
Limit 131234		
	1310 nm	1550 nm
Result	PASS	PASS
Loss (dB)	0.98	0.78
Limit (dB)	2.19	2.19
Margin (dB)	1.21	1.41
Reference (dBm)	-6.35	-6.80

Number of Adapters: 2
Number of Splices: 1
Patch Type: OS2 Singlemode
Patch Length1 (ft): 3
Patch Length2 (ft): 3
Reference Date: 01/19/2018 07:54:26 AM
1 Jumper

Loss (M->R)

PASS

	1310 nm	1550 nm
Result	PASS	PASS
Loss (dB)	0.88	0.53
Limit (dB)	2.19	2.19
Margin (dB)	1.31	1.66
Reference (dBm)	-5.88	-5.37

Compliant Network Standards:

1000BASE-LX	100GBASE-ER4	100GBASE-LR4
10GBASE-E	10GBASE-L	10GBASE-LX4
40GBASE-ER4	40GBASE-FR	40GBASE-LR4
Fibre Channel 100-SM-LC-L	Fibre Channel 1200-SM-LC-L	Fibre Channel 1600-SM-LC-L
Fibre Channel 200-SM-LC-L	Fibre Channel 400-SM-LC-L	Fibre Channel 400-SM-LC-M
Fibre Channel 800-SM-LC-I	Fibre Channel 800-SM-LC-L	

LINKWARE™ PC
CABLE TEST MANAGEMENT SOFTWARE

Cable ID: STRAND-4

Test Summary: PASS

Date / Time: 01/19/2018 09:24:32 AM
Cable Type: OS2 Singlemode

n = 1.4660 (1310 nm)
n = 1.4670 (1550 nm)

Loss (R->M)

PASS

Date / Time: 01/19/2018 09:24:32 AM
Test Limit: TIA-568.3-D OSP (OS2)
Limits Version: 1.9500
Operator: STEVEN
DTX-1800 (9421005 v2.7800)
Module: DTX-SFM2(9742077)
Calibration Date: 06/09/2017
DTX-1800R (9421006 v2.7800)
Module: DTX-SFM2(9738095)
Calibration Date: 06/09/2017

Propagation Delay (ns)	4739	
Length ft	3179	PASS
Limit 131234		
	1310 nm	1550 nm
Result	PASS	PASS
Loss (dB)	1.56	0.94
Limit (dB)	2.19	2.19
Margin (dB)	0.63	1.25
Reference (dBm)	-6.35	-6.80

Number of Adapters: 2
Number of Splices: 1
Patch Type: OS2 Singlemode
Patch Length1 (ft): 3
Patch Length2 (ft): 3
Reference Date: 01/19/2018 07:54:26 AM
1 Jumper

Loss (M->R)

PASS

	1310 nm	1550 nm
Result	PASS	PASS
Loss (dB)	0.52	0.44
Limit (dB)	2.19	2.19
Margin (dB)	1.67	1.75
Reference (dBm)	-5.88	-5.37

Compliant Network Standards:

1000BASE-LX	100GBASE-ER4	100GBASE-LR4
10GBASE-E	10GBASE-L	10GBASE-LX4
40GBASE-ER4	40GBASE-FR	40GBASE-LR4
Fibre Channel 100-SM-LC-L	Fibre Channel 1200-SM-LC-L	Fibre Channel 1600-SM-LC-L
Fibre Channel 200-SM-LC-L	Fibre Channel 400-SM-LC-L	Fibre Channel 400-SM-LC-M
Fibre Channel 800-SM-LC-I	Fibre Channel 800-SM-LC-L	

LINKWARE™ PC
CABLE TEST MANAGEMENT SOFTWARE

Cable ID: STRAND-5

Test Summary: PASS

Date / Time: 01/19/2018 09:27:21 AM
Cable Type: OS2 Singlemode

n = 1.4660 (1310 nm)
n = 1.4670 (1550 nm)

Loss (R->M)

PASS

Date / Time: 01/19/2018 09:27:21 AM
Test Limit: TIA-568.3-D OSP (OS2)
Limits Version: 1.9500
Operator: STEVEN
DTX-1800 (9421005 v2.7800)
Module: DTX-SFM2(9742077)
Calibration Date: 06/09/2017
DTX-1800R (9421006 v2.7800)
Module: DTX-SFM2(9738095)
Calibration Date: 06/09/2017

Propagation Delay (ns)	4739	
Length ft	3179	PASS
Limit 131234		
	1310 nm	1550 nm
Result	PASS	PASS
Loss (dB)	0.96	0.78
Limit (dB)	2.19	2.19
Margin (dB)	1.23	1.41
Reference (dBm)	-6.35	-6.80

Number of Adapters: 2
Number of Splices: 1
Patch Type: OS2 Singlemode
Patch Length1 (ft): 3
Patch Length2 (ft): 3
Reference Date: 01/19/2018 07:54:26 AM
1 Jumper

Loss (M->R)

PASS

	1310 nm	1550 nm
Result	PASS	PASS
Loss (dB)	0.84	0.60
Limit (dB)	2.19	2.19
Margin (dB)	1.35	1.59
Reference (dBm)	-5.88	-5.37

Compliant Network Standards:

1000BASE-LX	100GBASE-ER4	100GBASE-LR4
10GBASE-E	10GBASE-L	10GBASE-LX4
40GBASE-ER4	40GBASE-FR	40GBASE-LR4
Fibre Channel 100-SM-LC-L	Fibre Channel 1200-SM-LC-L	Fibre Channel 1600-SM-LC-L
Fibre Channel 200-SM-LC-L	Fibre Channel 400-SM-LC-L	Fibre Channel 400-SM-LC-M
Fibre Channel 800-SM-LC-I	Fibre Channel 800-SM-LC-L	

LINKWARE™ PC
CABLE TEST MANAGEMENT SOFTWARE

Cable ID: STRAND-6

Test Summary: PASS

Date / Time: 01/19/2018 09:27:21 AM
Cable Type: OS2 Singlemode

n = 1.4660 (1310 nm)
n = 1.4670 (1550 nm)

Loss (R->M)

PASS

Date / Time: 01/19/2018 09:27:21 AM
Test Limit: TIA-568.3-D OSP (OS2)
Limits Version: 1.9500
Operator: STEVEN
DTX-1800 (9421005 v2.7800)
Module: DTX-SFM2(9742077)
Calibration Date: 06/09/2017
DTX-1800R (9421006 v2.7800)
Module: DTX-SFM2(9738095)
Calibration Date: 06/09/2017

Propagation Delay (ns)	4739	
Length ft	3179	PASS
Limit 131234		
	1310 nm	1550 nm
Result	PASS	PASS
Loss (dB)	1.50	0.89
Limit (dB)	2.19	2.19
Margin (dB)	0.69	1.30
Reference (dBm)	-6.35	-6.80

Number of Adapters: 2
Number of Splices: 1
Patch Type: OS2 Singlemode
Patch Length1 (ft): 3
Patch Length2 (ft): 3
Reference Date: 01/19/2018 07:54:26 AM
1 Jumper

Loss (M->R)

PASS

	1310 nm	1550 nm
Result	PASS	PASS
Loss (dB)	0.60	0.47
Limit (dB)	2.19	2.19
Margin (dB)	1.59	1.72
Reference (dBm)	-5.88	-5.37

Compliant Network Standards:

1000BASE-LX	100GBASE-ER4	100GBASE-LR4
10GBASE-E	10GBASE-L	10GBASE-LX4
40GBASE-ER4	40GBASE-FR	40GBASE-LR4
Fibre Channel 100-SM-LC-L	Fibre Channel 1200-SM-LC-L	Fibre Channel 1600-SM-LC-L
Fibre Channel 200-SM-LC-L	Fibre Channel 400-SM-LC-L	Fibre Channel 400-SM-LC-M
Fibre Channel 800-SM-LC-I	Fibre Channel 800-SM-LC-L	

LINKWARE™ PC
CABLE TEST MANAGEMENT SOFTWARE

Cable ID: STRAND-7

Test Summary: PASS

Date / Time: 01/19/2018 09:30:52 AM
Cable Type: OS2 Singlemode

n = 1.4660 (1310 nm)
n = 1.4670 (1550 nm)

Loss (R->M)

PASS

Date / Time: 01/19/2018 09:30:52 AM
Test Limit: TIA-568.3-D OSP (OS2)
Limits Version: 1.9500
Operator: STEVEN
DTX-1800 (9421005 v2.7800)
Module: DTX-SFM2(9742077)
Calibration Date: 06/09/2017
DTX-1800R (9421006 v2.7800)
Module: DTX-SFM2(9738095)
Calibration Date: 06/09/2017

Propagation Delay (ns)	4739	
Length ft	3179	PASS
Limit 131234		
	1310 nm	1550 nm
Result	PASS	PASS
Loss (dB)	1.15	0.95
Limit (dB)	2.19	2.19
Margin (dB)	1.04	1.24
Reference (dBm)	-6.35	-6.80

Number of Adapters: 2
Number of Splices: 1
Patch Type: OS2 Singlemode
Patch Length1 (ft): 3
Patch Length2 (ft): 3
Reference Date: 01/19/2018 07:54:26 AM
1 Jumper

Loss (M->R)

PASS

	1310 nm	1550 nm
Result	PASS	PASS
Loss (dB)	1.59	1.21
Limit (dB)	2.19	2.19
Margin (dB)	0.60	0.98
Reference (dBm)	-5.88	-5.37

Compliant Network Standards:

1000BASE-LX	100GBASE-ER4	100GBASE-LR4
10GBASE-E	10GBASE-L	10GBASE-LX4
40GBASE-ER4	40GBASE-FR	40GBASE-LR4
Fibre Channel 100-SM-LC-L	Fibre Channel 1200-SM-LC-L	Fibre Channel 1600-SM-LC-L
Fibre Channel 200-SM-LC-L	Fibre Channel 400-SM-LC-L	Fibre Channel 400-SM-LC-M
Fibre Channel 800-SM-LC-I	Fibre Channel 800-SM-LC-L	

LINKWARE™ PC
CABLE TEST MANAGEMENT SOFTWARE

Cable ID: STRAND-8

Test Summary: PASS

Date / Time: 01/19/2018 09:30:52 AM
Cable Type: OS2 Singlemode

n = 1.4660 (1310 nm)
n = 1.4670 (1550 nm)

Loss (R->M)

PASS

Date / Time: 01/19/2018 09:30:52 AM
Test Limit: TIA-568.3-D OSP (OS2)
Limits Version: 1.9500
Operator: STEVEN
DTX-1800 (9421005 v2.7800)
Module: DTX-SFM2(9742077)
Calibration Date: 06/09/2017
DTX-1800R (9421006 v2.7800)
Module: DTX-SFM2(9738095)
Calibration Date: 06/09/2017

Propagation Delay (ns)	4739	
Length ft	3179	PASS
Limit 131234		
	1310 nm	1550 nm
Result	PASS	PASS
Loss (dB)	1.14	0.94
Limit (dB)	2.19	2.19
Margin (dB)	1.05	1.25
Reference (dBm)	-6.35	-6.80

Number of Adapters: 2
Number of Splices: 1
Patch Type: OS2 Singlemode
Patch Length1 (ft): 3
Patch Length2 (ft): 3
Reference Date: 01/19/2018 07:54:26 AM
1 Jumper

Loss (M->R)

PASS

	1310 nm	1550 nm
Result	PASS	PASS
Loss (dB)	1.59	1.21
Limit (dB)	2.19	2.19
Margin (dB)	0.60	0.98
Reference (dBm)	-5.88	-5.37

Compliant Network Standards:

1000BASE-LX	100GBASE-ER4	100GBASE-LR4
10GBASE-E	10GBASE-L	10GBASE-LX4
40GBASE-ER4	40GBASE-FR	40GBASE-LR4
Fibre Channel 100-SM-LC-L	Fibre Channel 1200-SM-LC-L	Fibre Channel 1600-SM-LC-L
Fibre Channel 200-SM-LC-L	Fibre Channel 400-SM-LC-L	Fibre Channel 400-SM-LC-M
Fibre Channel 800-SM-LC-I	Fibre Channel 800-SM-LC-L	

LINKWARE™ PC
CABLE TEST MANAGEMENT SOFTWARE

Cable ID: STRAND-9

Test Summary: PASS

Date / Time: 01/19/2018 09:47:58 AM
Cable Type: OS2 Singlemode

n = 1.4660 (1310 nm)
n = 1.4670 (1550 nm)

Loss (R->M)

PASS

Date / Time: 01/19/2018 09:47:58 AM
Test Limit: TIA-568.3-D OSP (OS2)
Limits Version: 1.9500
Operator: STEVEN
DTX-1800 (9421005 v2.7800)
Module: DTX-SFM2(9742077)
Calibration Date: 06/09/2017
DTX-1800R (9421006 v2.7800)
Module: DTX-SFM2(9738095)
Calibration Date: 06/09/2017

Propagation Delay (ns)	4739	
Length ft	3179	PASS
Limit 131234		
	1310 nm	1550 nm
Result	PASS	PASS
Loss (dB)	1.48	0.85
Limit (dB)	2.19	2.19
Margin (dB)	0.71	1.34
Reference (dBm)	-6.35	-6.80

Number of Adapters: 2
Number of Splices: 1
Patch Type: OS2 Singlemode
Patch Length1 (ft): 3
Patch Length2 (ft): 3
Reference Date: 01/19/2018 07:54:26 AM
1 Jumper

Loss (M->R)

PASS

	1310 nm	1550 nm
Result	PASS	PASS
Loss (dB)	0.59	0.42
Limit (dB)	2.19	2.19
Margin (dB)	1.60	1.77
Reference (dBm)	-5.88	-5.37

Compliant Network Standards:

1000BASE-LX	100GBASE-ER4	100GBASE-LR4
10GBASE-E	10GBASE-L	10GBASE-LX4
40GBASE-ER4	40GBASE-FR	40GBASE-LR4
Fibre Channel 100-SM-LC-L	Fibre Channel 1200-SM-LC-L	Fibre Channel 1600-SM-LC-L
Fibre Channel 200-SM-LC-L	Fibre Channel 400-SM-LC-L	Fibre Channel 400-SM-LC-M
Fibre Channel 800-SM-LC-I	Fibre Channel 800-SM-LC-L	

LINKWARE™ PC
CABLE TEST MANAGEMENT SOFTWARE

Cable ID: STRAND-10

Test Summary: PASS

Date / Time: 01/19/2018 09:47:58 AM
Cable Type: OS2 Singlemode

n = 1.4660 (1310 nm)
n = 1.4670 (1550 nm)

Loss (R->M)

PASS

Date / Time: 01/19/2018 09:47:58 AM
Test Limit: TIA-568.3-D OSP (OS2)
Limits Version: 1.9500
Operator: STEVEN
DTX-1800 (9421005 v2.7800)
Module: DTX-SFM2(9742077)
Calibration Date: 06/09/2017
DTX-1800R (9421006 v2.7800)
Module: DTX-SFM2(9738095)
Calibration Date: 06/09/2017

Propagation Delay (ns)	4739	
Length ft	3179	PASS
Limit 131234		
	1310 nm	1550 nm
Result	PASS	PASS
Loss (dB)	1.34	0.93
Limit (dB)	2.19	2.19
Margin (dB)	0.85	1.26
Reference (dBm)	-6.35	-6.80

Number of Adapters: 2
Number of Splices: 1
Patch Type: OS2 Singlemode
Patch Length1 (ft): 3
Patch Length2 (ft): 3
Reference Date: 01/19/2018 07:54:26 AM
1 Jumper

Loss (M->R)

PASS

	1310 nm	1550 nm
Result	PASS	PASS
Loss (dB)	0.78	0.52
Limit (dB)	2.19	2.19
Margin (dB)	1.41	1.67
Reference (dBm)	-5.88	-5.37

Compliant Network Standards:

1000BASE-LX	100GBASE-ER4	100GBASE-LR4
10GBASE-E	10GBASE-L	10GBASE-LX4
40GBASE-ER4	40GBASE-FR	40GBASE-LR4
Fibre Channel 100-SM-LC-L	Fibre Channel 1200-SM-LC-L	Fibre Channel 1600-SM-LC-L
Fibre Channel 200-SM-LC-L	Fibre Channel 400-SM-LC-L	Fibre Channel 400-SM-LC-M
Fibre Channel 800-SM-LC-I	Fibre Channel 800-SM-LC-L	

LINKWARE™ PC
CABLE TEST MANAGEMENT SOFTWARE

Cable ID: STRAND-11

Test Summary: PASS

Date / Time: 01/19/2018 09:12:25 AM
Cable Type: OS2 Singlemode

n = 1.4660 (1310 nm)
n = 1.4670 (1550 nm)

Loss (R->M)

PASS

Date / Time: 01/19/2018 09:12:25 AM
Test Limit: TIA-568.3-D OSP (OS2)
Limits Version: 1.9500
Operator: STEVEN
DTX-1800 (9421005 v2.7800)
Module: DTX-SFM2(9742077)
Calibration Date: 06/09/2017
DTX-1800R (9421006 v2.7800)
Module: DTX-SFM2(9738095)
Calibration Date: 06/09/2017

Propagation Delay (ns)	4739	
Length ft	3179	PASS
Limit 131234		
	1310 nm	1550 nm
Result	PASS	PASS
Loss (dB)	0.94	0.77
Limit (dB)	2.19	2.19
Margin (dB)	1.25	1.42
Reference (dBm)	-6.35	-6.80

Number of Adapters: 2
Number of Splices: 1
Patch Type: OS2 Singlemode
Patch Length1 (ft): 3
Patch Length2 (ft): 3
Reference Date: 01/19/2018 07:54:26 AM
1 Jumper

Loss (M->R)

PASS

	1310 nm	1550 nm
Result	PASS	PASS
Loss (dB)	0.85	0.69
Limit (dB)	2.19	2.19
Margin (dB)	1.34	1.50
Reference (dBm)	-5.88	-5.37

Compliant Network Standards:

1000BASE-LX	100GBASE-ER4	100GBASE-LR4
10GBASE-E	10GBASE-L	10GBASE-LX4
40GBASE-ER4	40GBASE-FR	40GBASE-LR4
Fibre Channel 100-SM-LC-L	Fibre Channel 1200-SM-LC-L	Fibre Channel 1600-SM-LC-L
Fibre Channel 200-SM-LC-L	Fibre Channel 400-SM-LC-L	Fibre Channel 400-SM-LC-M
Fibre Channel 800-SM-LC-I	Fibre Channel 800-SM-LC-L	

LINKWARE™ PC
CABLE TEST MANAGEMENT SOFTWARE

Cable ID: STRAND-12

Test Summary: PASS

Date / Time: 01/19/2018 09:12:25 AM
Cable Type: OS2 Singlemode

n = 1.4660 (1310 nm)
n = 1.4670 (1550 nm)

Loss (R->M)

PASS

Date / Time: 01/19/2018 09:12:25 AM
Test Limit: TIA-568.3-D OSP (OS2)
Limits Version: 1.9500
Operator: STEVEN
DTX-1800 (9421005 v2.7800)
Module: DTX-SFM2(9742077)
Calibration Date: 06/09/2017
DTX-1800R (9421006 v2.7800)
Module: DTX-SFM2(9738095)
Calibration Date: 06/09/2017

Propagation Delay (ns)	4739	
Length ft	3179	PASS
Limit 131234		
	1310 nm	1550 nm
Result	PASS	PASS
Loss (dB)	2.15	1.59
Limit (dB)	2.19	2.19
Margin (dB)	0.04	0.60
Reference (dBm)	-6.35	-6.80

Number of Adapters: 2
Number of Splices: 1
Patch Type: OS2 Singlemode
Patch Length1 (ft): 3
Patch Length2 (ft): 3
Reference Date: 01/19/2018 07:54:26 AM
1 Jumper

Loss (M->R)

PASS

	1310 nm	1550 nm
Result	PASS	PASS
Loss (dB)	1.72	1.18
Limit (dB)	2.19	2.19
Margin (dB)	0.47	1.01
Reference (dBm)	-5.88	-5.37

Compliant Network Standards:

1000BASE-LX	100GBASE-ER4	100GBASE-LR4
10GBASE-E	10GBASE-L	10GBASE-LX4
40GBASE-ER4	40GBASE-FR	40GBASE-LR4
Fibre Channel 100-SM-LC-L	Fibre Channel 1200-SM-LC-L	Fibre Channel 1600-SM-LC-L
Fibre Channel 200-SM-LC-L	Fibre Channel 400-SM-LC-L	Fibre Channel 400-SM-LC-M
Fibre Channel 800-SM-LC-I	Fibre Channel 800-SM-LC-L	

LINKWARE™ PC
CABLE TEST MANAGEMENT SOFTWARE

Cable ID: TEST-1

Date / Time: 01/18/2018 09:49:46 AM
Cable Type: OS2 Singlemode
End1 Name: NEW WATER WELL

n = 1.4660 (1310 nm)
n = 1.4670 (1550 nm)
End2 Name: 30158

Test Summary: PASS

Backscatter Coefficient: -80.0dB (1310 nm)
Backscatter Coefficient: -82.5dB (1550 nm)

OTDR End1 PASS

Test Limit: ANSI/TIA-568.3-D
Limits Version: 1.9500
Date / Time: 01/18/2018 09:49:46 AM
Operator: STEVEN
Tester: DTX-1800 (9421005 2.7800)
Module: DTX-OTDR-QMOD (1666506)
Calibration Date: 11/20/2017

Launch Only
Launch Type: Singlemode
Launch Length : 429.8 ft

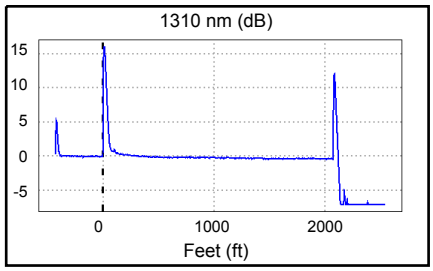

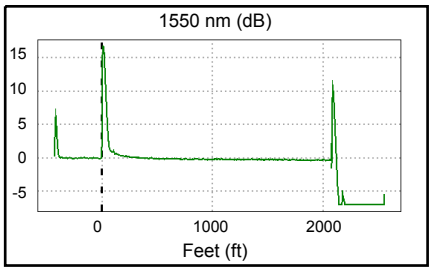

Overall Results	1310 nm	1550 nm	Limit
Overall Length (ft)	2076.9		13123
Overall Loss (dB)	0.37	0.30	
ORL (dB)	N/A	N/A	
Attn Coeff (dB/km)	0.48	0.59	

Settings (Auto OTDR)	1310 nm	1550 nm
Auto OTDR		
Range (Auto)	3112 ft	3116 ft
Resolution (Auto)	0.4 ft	0.4 ft
Pulse Width (Auto)	20 ns	20 ns
Averaging Time (Auto)	8 s	13 s
Loss Threshold (Auto)	0.15 dB	0.15 dB

	Loss (dB)			Reflectance (dB)			Attn Coeff (dB/km)		
Events	1310 nm	1550 nm	Limit	1310 nm	1550 nm	Limit	1310 nm	1550 nm	Limit
2076.9 ft End	N/A	N/A		-35.76	-41.93		0.48	0.59	
0.0 ft Launch Event	0.06	-0.07	0.75	> -25.83	> -29.41		N/A	N/A	
-429.8 ft OTDR Port	N/A	N/A		-50.80	-52.76		N/A	N/A	

LINKWARE™PC
CABLE TEST MANAGEMENT SOFTWARE

Cable ID: VIOLET STRAND-10

Date / Time: 01/19/2018 10:28:50 AM
Cable Type: OS2 Singlemode
End1 Name: NEW WATER WELL

n = 1.4660 (1310 nm)
n = 1.4670 (1550 nm)
End2 Name: WATER TREATMENT BUILDING

Test Summary: PASS

Backscatter Coefficient: -80.0dB (1310 nm)
Backscatter Coefficient: -82.5dB (1550 nm)

OTDR End1 PASS

Test Limit: ANSI/TIA-568.3-D
Limits Version: 1.9500
Date / Time: 01/19/2018 10:28:50 AM
Operator: STEVEN
Tester: DTX-1800 (9421005 2.7800)
Module: DTX-OTDR-QMOD (1666506)
Calibration Date: 11/20/2017

Launch Only
Launch Type: Singlemode
Launch Length : 530.7 ft

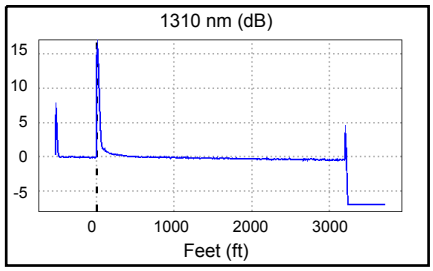

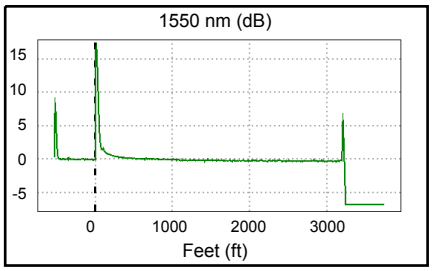

Overall Results	1310 nm	1550 nm	Limit
Overall Length (ft)	3198.6		13123
Overall Loss (dB)	0.40	0.17	
ORL (dB)	N/A	N/A	
Attn Coeff (dB/km)	0.58	N/A	

Settings (Auto OTDR)	1310 nm	1550 nm
Auto OTDR		
Range (Auto)	4253 ft	4410 ft
Resolution (Auto)	0.8 ft	0.4 ft
Pulse Width (Auto)	20 ns	20 ns
Averaging Time (Auto)	5 s	15 s
Loss Threshold (Auto)	0.15 dB	0.15 dB

	Loss (dB)			Reflectance (dB)			Attn Coeff (dB/km)		
Events	1310 nm	1550 nm	Limit	1310 nm	1550 nm	Limit	1310 nm	1550 nm	Limit
3198.6 ft End	N/A	N/A		-55.27	-52.58		0.58	N/A	
0.0 ft Launch Event	-0.16	-0.14	0.75	> -25.36	> -28.67		N/A	N/A	
-530.7 ft OTDR Port	N/A	N/A		-47.81	-48.77		N/A	N/A	

LINKWARE™PC
CABLE TEST MANAGEMENT SOFTWARE

Cable ID: VIOLET STRAND-22

Date / Time: 01/19/2018 11:13:41 AM
Cable Type: OS2 Singlemode
End1 Name: NEW WATER WELL

n = 1.4660 (1310 nm)
n = 1.4670 (1550 nm)
End2 Name: WATER TREATMENT BUILDING

Test Summary: PASS

Backscatter Coefficient: -80.0dB (1310 nm)
Backscatter Coefficient: -82.5dB (1550 nm)

OTDR End2 PASS

Test Limit: ANSI/TIA-568.3-D
Limits Version: 1.9500
Date / Time: 01/19/2018 11:13:41 AM
Operator: STEVEN
Tester: DTX-1800 (9421005 2.7800)
Module: DTX-OTDR-QMOD (1666506)
Calibration Date: 11/20/2017

Launch Only
Launch Type: Singlemode
Launch Length : 530.8 ft

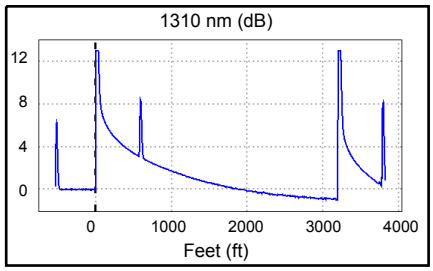

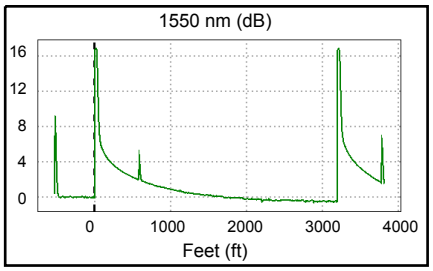

Overall Results	1310 nm	1550 nm	Limit
Overall Length (ft)	3196.7		13123
Overall Loss (dB)	0.91	0.54	
ORL (dB)	N/A	N/A	
Attn Coeff (dB/km)	1.51	1.06	

Settings (Auto OTDR)	1310 nm	1550 nm
Auto OTDR		
Range (Auto)	4477 ft	4482 ft
Resolution (Auto)	0.2 ft	1.7 ft
Pulse Width (Auto)	40 ns	20 ns
Averaging Time (Auto)	5 s	12 s
Loss Threshold (Auto)	0.15 dB	0.15 dB

	Loss (dB)			Reflectance (dB)			Attn Coeff (dB/km)		
Events	1310 nm	1550 nm	Limit	1310 nm	1550 nm	Limit	1310 nm	1550 nm	Limit
3196.7 ft End	N/A	N/A		> -26.18	> -22.73		1.51	1.06	
1679.5 ft Loss		0.16	0.30		N/A			N/A	
579.1 ft Ghost	N/A	N/A		> -43.53	> -57.23		N/A	N/A	
0.0 ft Launch Event	-0.56	-1.41	0.75	> -28.69	> -27.24		N/A	N/A	
-530.8 ft OTDR Port	N/A	N/A		-46.45	-48.68		N/A	N/A	

-WARNING: Negative Loss value found in test result.

LINKWARE™ PC
CABLE TEST MANAGEMENT SOFTWARE

Cable ID: WHITE STRAND-6

Date / Time: 01/19/2018 10:12:01 AM
Cable Type: OS2 Singlemode
End1 Name: NEW WATER WELL

n = 1.4660 (1310 nm)
n = 1.4670 (1550 nm)
End2 Name: WATER TREATMENT BUILDING

Test Summary: PASS

Backscatter Coefficient: -80.0dB (1310 nm)
Backscatter Coefficient: -82.5dB (1550 nm)

OTDR End1 PASS

Test Limit: ANSI/TIA-568.3-D
Limits Version: 1.9500
Date / Time: 01/19/2018 10:12:01 AM
Operator: STEVEN
Tester: DTX-1800 (9421005 2.7800)
Module: DTX-OTDR-QMOD (1666506)
Calibration Date: 11/20/2017

Launch Only
Launch Type: Singlemode
Launch Length : 530.8 ft

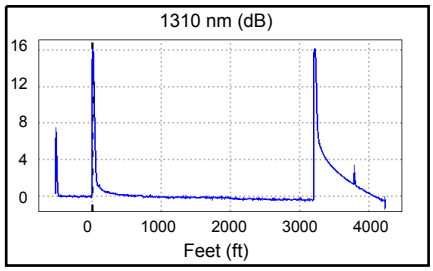

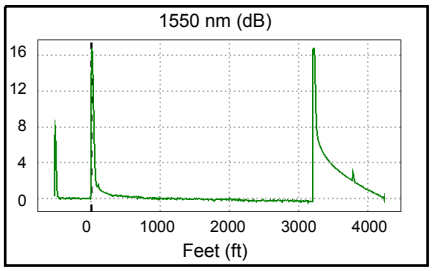

Overall Results	1310 nm	1550 nm	Limit
Overall Length (ft)	3197.8		13123
Overall Loss (dB)	0.39	0.32	
ORL (dB)	N/A	N/A	
Attn Coeff (dB/km)	0.60	0.53	

Settings (Auto OTDR)	1310 nm	1550 nm
Auto OTDR		
Range (Auto)	4889 ft	4903 ft
Resolution (Auto)	0.8 ft	0.8 ft
Pulse Width (Auto)	20 ns	20 ns
Averaging Time (Auto)	9 s	14 s
Loss Threshold (Auto)	0.15 dB	0.15 dB

	Loss (dB)			Reflectance (dB)			Attn Coeff (dB/km)		
Events	1310 nm	1550 nm	Limit	1310 nm	1550 nm	Limit	1310 nm	1550 nm	Limit
3197.8 ft End	N/A	N/A		> -22.19	> -23.36		0.60	0.53	
0.0 ft Launch Event	-0.19	-0.20	0.75	> -25.34	> -28.93		N/A	N/A	
-530.8 ft OTDR Port	N/A	N/A		-47.97	-48.95		N/A	N/A	

LINKWARE™ PC
CABLE TEST MANAGEMENT SOFTWARE

Cable ID: WHITE STRAND-18

Date / Time: 01/19/2018 11:01:54 AM
Cable Type: OS2 Singlemode
End1 Name: NEW WATER WELL

n = 1.4660 (1310 nm)
n = 1.4670 (1550 nm)
End2 Name: WATER TREATMENT BUILDING

Test Summary: PASS

Backscatter Coefficient: -80.0dB (1310 nm)
Backscatter Coefficient: -82.5dB (1550 nm)

OTDR End2 PASS

Test Limit: ANSI/TIA-568.3-D
Limits Version: 1.9500
Date / Time: 01/19/2018 11:01:54 AM
Operator: STEVEN
Tester: DTX-1800 (9421005 2.7800)
Module: DTX-OTDR-QMOD (1666506)
Calibration Date: 11/20/2017

Launch Only
Launch Type: Singlemode
Launch Length : 530.8 ft

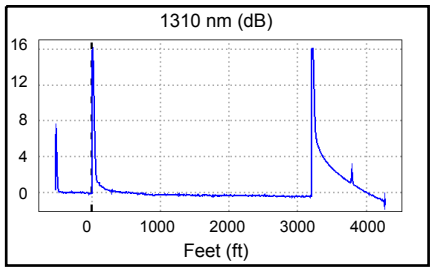

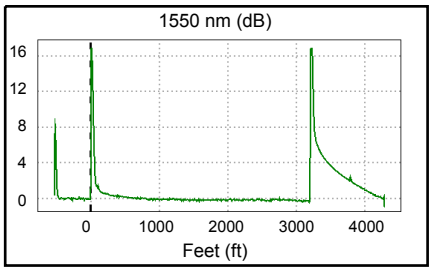

Overall Results	1310 nm	1550 nm	Limit
Overall Length (ft)	3198.6		13123
Overall Loss (dB)	0.42	0.25	
ORL (dB)	N/A	N/A	
Attn Coeff (dB/km)	0.47	0.66	

Settings (Auto OTDR)	1310 nm	1550 nm
Auto OTDR		
Range (Auto)	4933 ft	4946 ft
Resolution (Auto)	1.7 ft	0.8 ft
Pulse Width (Auto)	20 ns	20 ns
Averaging Time (Auto)	5 s	14 s
Loss Threshold (Auto)	0.15 dB	0.15 dB

	Loss (dB)			Reflectance (dB)			Attn Coeff (dB/km)		
Events	1310 nm	1550 nm	Limit	1310 nm	1550 nm	Limit	1310 nm	1550 nm	Limit
3198.6 ft End	N/A	N/A		> -22.34	> -23.36		0.47	0.66	
0.0 ft Launch Event	-0.04	-0.40	0.75	> -25.39	> -28.77		N/A	N/A	
-530.8 ft OTDR Port	N/A	N/A		-47.72	-48.60		N/A	N/A	

-WARNING: Negative Loss value found in test result.

LINKWARE™ PC
CABLE TEST MANAGEMENT SOFTWARE

Cable ID: YELLOW STRAND-9

Date / Time: 01/19/2018 10:17:05 AM
Cable Type: OS2 Singlemode
End1 Name: NEW WATER WELL

n = 1.4660 (1310 nm)
n = 1.4670 (1550 nm)
End2 Name: WATER TREATMENT BUILDING

Test Summary: PASS

Backscatter Coefficient: -80.0dB (1310 nm)
Backscatter Coefficient: -82.5dB (1550 nm)

OTDR End1 PASS

Test Limit: ANSI/TIA-568.3-D
Limits Version: 1.9500
Date / Time: 01/19/2018 10:17:05 AM
Operator: STEVEN
Tester: DTX-1800 (9421005 2.7800)
Module: DTX-OTDR-QMOD (1666506)
Calibration Date: 11/20/2017

Launch Only
Launch Type: Singlemode
Launch Length : 530.8 ft

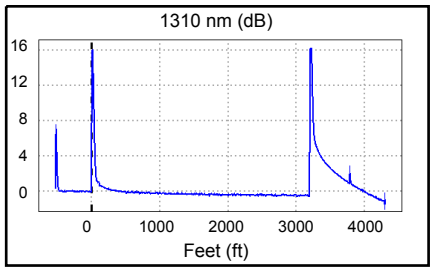

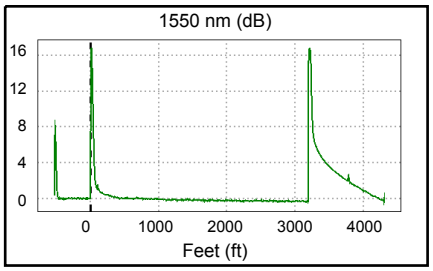

Overall Results	1310 nm	1550 nm	Limit
Overall Length (ft)	3198.6		13123
Overall Loss (dB)	0.50	0.34	
ORL (dB)	N/A	N/A	
Attn Coeff (dB/km)	0.46	0.32	

Settings (Auto OTDR)	1310 nm	1550 nm
Auto OTDR		
Range (Auto)	4975 ft	4978 ft
Resolution (Auto)	1.7 ft	0.8 ft
Pulse Width (Auto)	20 ns	20 ns
Averaging Time (Auto)	5 s	15 s
Loss Threshold (Auto)	0.15 dB	0.15 dB

	Loss (dB)			Reflectance (dB)			Attn Coeff (dB/km)		
Events	1310 nm	1550 nm	Limit	1310 nm	1550 nm	Limit	1310 nm	1550 nm	Limit
3198.6 ft End	N/A	N/A		> -22.09	> -23.43		0.46	0.32	
0.0 ft Launch Event	0.06	0.02	0.75	> -25.35	> -28.96		N/A	N/A	
-530.8 ft OTDR Port	N/A	N/A		-48.06	-49.02		N/A	N/A	

LINKWARE™ PC
CABLE TEST MANAGEMENT SOFTWARE

Cable ID: YELLOW STRAND-21

Date / Time: 01/19/2018 11:08:22 AM
Cable Type: OS2 Singlemode
End1 Name: NEW WATER WELL

n = 1.4660 (1310 nm)
n = 1.4670 (1550 nm)
End2 Name: WATER TREATMENT BUILDING

Test Summary: PASS

Backscatter Coefficient: -80.0dB (1310 nm)
Backscatter Coefficient: -82.5dB (1550 nm)

OTDR End2 PASS

Test Limit: ANSI/TIA-568.3-D
Limits Version: 1.9500
Date / Time: 01/19/2018 11:08:21 AM
Operator: STEVEN
Tester: DTX-1800 (9421005 2.7800)
Module: DTX-OTDR-QMOD (1666506)
Calibration Date: 11/20/2017

Launch Only
Launch Type: Singlemode
Launch Length : 530.8 ft

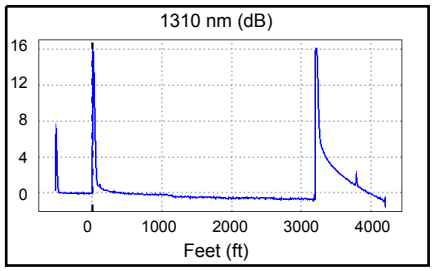

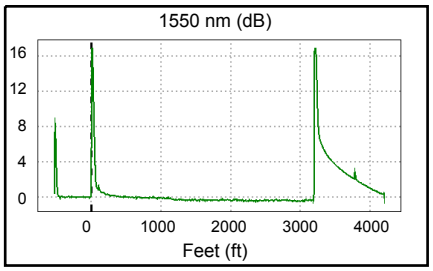

Overall Results	1310 nm	1550 nm	Limit
Overall Length (ft)	3198.6		13123
Overall Loss (dB)	0.67	0.40	
ORL (dB)	N/A	N/A	
Attn Coeff (dB/km)	0.63	0.33	

Settings (Auto OTDR)	1310 nm	1550 nm
Auto OTDR		
Range (Auto)	4847 ft	4875 ft
Resolution (Auto)	1.7 ft	0.8 ft
Pulse Width (Auto)	20 ns	20 ns
Averaging Time (Auto)	5 s	16 s
Loss Threshold (Auto)	0.15 dB	0.15 dB

	Loss (dB)			Reflectance (dB)			Attn Coeff (dB/km)		
Events	1310 nm	1550 nm	Limit	1310 nm	1550 nm	Limit	1310 nm	1550 nm	Limit
3198.6 ft End	N/A	N/A		> -21.82	> -23.04		0.49	0.13	
1139.8 ft Loss	0.16	0.16	0.30	N/A	N/A		0.88	0.69	
0.0 ft Launch Event	-0.11	-0.09	0.75	> -25.72	> -29.08		N/A	N/A	
-530.8 ft OTDR Port	N/A	N/A		-47.66	-48.51		N/A	N/A	

EA Engineering, Science, and Technology, Inc

Employee/Visitor Register and Safety Brief				
Date: 1-22-18				
Site Entry/Exit		Name (Printed)	Signature	Company
Time In	Time Out			
0800	1500	Tyler Curley		EA
0730	↓	Erik White		HMCG
0730	↓	Mark Van Zuidam		HMCG
0730	↓	LEROY MOORHEAD		HMCG

EA ENGINEERING, SCIENCE AND TECHNOLOGY, INC.
SAFETY MEETING REPORT

Date: 1-22-18	Time: 0800	Duration of meeting: 5min	Project # 0459a1M01
Location: Well 006239		Task: Line survey	

Type of meeting: X Daily ___ Weekly ___ Monthly ___ Other: _____

Items/Issues discussed:

1. Traffic
2. Slips trips falls
3. Cold stress
4.
5.

Attach minutes of safety meeting if taken.

Safety questions/issues raised:	Actions/Follow-up needed:
1. None	
2.	
3.	
4.	
5.	
6.	

Remarks: None

Meeting conducted by:
Tyler Cisley

EA Engineering, Science, and Technology, Inc.

DAILY SAFETY INSPECTION CHECKLIST (TO BE COMPLETED EACH DAY OF CONSTRUCTION OR HTRW SITE ACTIVITIES)

Site: KAFB
Location: Well 100539
Project No.: C87900DM01
Client: USACE

Prepared by SSHO: Tyler Curley
Project Manager: Devon Jerdonek
Date: 7-20-16

Rating	Y	N	N/A	Comments/Immediate Corrective Action[1]
Accident Prevention Plan (APP) and Site Safety and Health Plan (SSHP) General Requirements				
Are there new onsite personnel? • Did they receive pre-entry briefing and are their names recorded in field logbook or daily log? • Was the USACE PM made aware of the new personnel. • Required training and medical surveillance documentation received (e.g., 40-hr, 8 hr, etc.)?	✓			
Did personnel sign in/out of site?	✓			
Daily tailgate safety meetings conducted and documented?	✓			
Were new activities performed today? Were hazards identified, discussed during the daily safety tailgate, and incorporated into revised APP/SSHP?	✓			
New materials brought on site? MSDSs available?		✓		
Exclusion (EZ), Contamination Reduction (CRZ), and Support Zones (SZ) delineated and enforced?	✓			
General housekeeping measures in place to prevent hazards?	✓			
Emergency Planning				
Were there any changes to emergency contact names, telephone numbers, or hospital? If so, were site personnel made aware and was information distributed/reposted.		✓		
Adequate safety equipment inventory available?	✓			
Fire extinguisher available (monthly inspection of extinguisher will suffice)	✓			
Eyewash station(s) functioning and in place (weekly inspection of eye wash station will suffice)?	✓			
First aid supplies available (weekly inspection of first aid kit will suffice)?	✓			
Communication equipment readily available for emergencies?	✓			
Any reported accidents/incidents at this site? If so, were accident reporting procedures followed?		✓		
Air Monitoring				
Monitoring equipment specified in SSHP available and in working order? Air monitoring instrumentation for this site includes – check each if required/on site, note deficiencies in comments: • Combustible gas meter • Organic vapor analyzer • Contaminant specific analyzer for benzene (if total organic vapor concentrations exceed 0.5 ppm)			✓	
Monitoring equipment calibrated and calibration records			✓	

Y = Satisfactory or Yes; N = Unsatisfactory or No, N/A = Not applicable

Rating	Y	N	N/A	Comments/Immediate Corrective Action[1]
available?			✓	
Environmental and personnel monitoring performed as specified in SSHP?			✓	
PPE				
Proper dermal protection worn by EA and subcontracted employees when handling/ contacting hazardous chemicals or contaminated environmental media?	✓			
Required PPE (hard hats, safety boots / shoes, eye protection with side shields, hearing protection) being worn by EA and subcontracted employees?	✓			
PPE inspection completed by SSHO?	✓			
Drill Rig Operations				
Daily rig inspection completed? Any equipment problems?	✓			
Drill rigs/elevated equipment maintaining minimum 10-ft distance from energized (50 kV) overhead power lines?	✓			
Investigation-derived Waste (IDW)				
Wastes properly staged, secured, and labeled at end of day?			✓	
Additional Comments:				

Site Safety and Health Officer's Signature

1-22-16
Date

[1]If a deficiency is noted that cannot be immediately corrected, the SSHO will monitor the progress in correcting the deficiency and will document following:

- Date the deficiency was identified
- Description of the deficiency
- Name of the person responsible for correcting the deficiency
- Projected date of correction
- Actual date of correction.

HEALTH AND SAFETY ACTIVITY REPORT

Site: KAFB Location: Well 106239

Weather Cond.: Sunny, cold Onsite Hours: From 0730 To 1500

Changes in PPE Levels[1]	Work Operations	Reasons for Change
None		

Site Safety and Health Plan Violations	Corrective Action Specified	Corrective Action Taken [2](yes/no)
None		

Observations and Comments:

None

Completed by: Tyler Curley Date: 1-22-18

Site Health and Safety Supervisor

[1]Only SSHO may change PPE levels, using only criteria specified in APP/SSHP.

[2]If a deficiency is noted that cannot be immediately corrected, the SSHO will monitor the progress in correcting the deficiency and will document following:

- Date the deficiency was identified
- Description of the deficiency
- Name of the person responsible for correcting the deficiency
- Projected date of correction
- Actual date of correction.

From:	Curley, Tyler
To:	"Trent.Simpler@usace.army.mil"; "Amy.E.Sanchez@usace.army.mil"; "Carlos.F.Salazar@usace.army.mil"; "Linda.Dreeland@usace.army.mil"; "Mark.J.Phaneuf@usace.army.mil"
Cc:	Jercinovic, Devon; Morse, Earl; McKeage, Kevin; Bowman, Matthew
Subject:	Activity Report for KAFB Well 106239 Conveyance Line Installation 23 January 2018
Date:	Tuesday, January 23, 2018 8:09:36 PM
Attachments:	Daily Field Activities Summary Report.pdf

Issues Today 23 Tuesday January 2018:

- None

Resolution of Issues:

- None

Work Performed Today:

- Check the operation of all controls
- Tested leak detection systems (vault leak detection/containment line leak detection)
- Tested well drawdown alarm
- Tested the vault access alarm

Installation Completion to Date: 99%

Work Planned for the following days:

- Wednesday: No activities
- Thursday: Continue start up testing

Tyler Curley, P.E.
EA Engineering, Science, and Technology, Inc., PBC
320 Gold Avenue, SW Suite 1300
Albuquerque, NM 87120
(505) 715-4422 work
(719) 688-9558 cell
tcurley@eaest.com

DAILY FIELD ACTIVITIES SUMMARY REPORT		
PROJECT NAME: KAFB Well 106239 Conveyance Line Installation		
Date: 1-23-18	Time Shift Beginning: 0700	Time Shift Ending: 1630
Project Number: 62599DM01		Contract/Task Order No.:
Client: USACE		Report By: Tyler Curley
Contractor(s): Wilson Electric		Project Manager: Devon Jercinovic
Design Manager:		Oversight Manager: Tyler Curley
Design Engineer: George Nemeth		Site Engineer: Tyler Curley
Weather: Sunny 50° F		Logbook Number: NA
Personnel Onsite:	**Name:**	**Reason for Being Onsite:**
EA	Kevin McKeage	Construction/Safety Oversight
Techsas	Ed Butler	Instrumentation Contractor
I&C Solution	Preston Patterson Robbie Sitriana Ronald Day Fred Tillies	Start-up Testing

Work Performed:

Planned Activities:

- Begin Extraction well start up testing

Completed Activities:

- Check the operation of all controls
- Tested leak detection systems (vault leak detection/containment line leak detection)
- Tested well drawdown alarm
- Tested the vault access alarm

Material Deliveries:

- None

Construction Quality Control Activities or Samples Collected:

- None

Observations or Possible Variations from Specifications:

- None

Anticipated Activities for the Following Day:

- Wednesday: No activities
- Thursday: Continue start up testing

Planned Material Deliveries:

- None

Contractor Reports, Manifests, Documents Reviewed and Logged:

- None

Report Completed By:

Tyler Curley	Date: 23 January 2018

EA Engineering, Science, and Technology, Inc

Employee/Visitor Register and Safety Brief				
Date: 1-23-18				
Site Entry/Exit		Name (Printed)	Signature	Company
Time In	Time Out			
0730	1630	Tyler Curley		EA
7:38		Fred Tither		IaC S
7:18		Preston Patterson		I&C Solutions
7:20		Ed Butler		TECHSAS
8:[illegible]		Robbie Sharpe		ICS
8:00		Ronald Day		ICS

EA ENGINEERING, SCIENCE AND TECHNOLOGY, INC.
SAFETY MEETING REPORT

Date: 1-23-18	Time: 0730	Duration of meeting: 10min	Project #
Location: KAFB well 100239		Task: Start up	

Type of meeting: X Daily ___ Weekly ___ Monthly ___ Other: _____

Items/Issues discussed:

1. Traffic
2. Electrical hazards
3. Cold stress
4.
5.

Attach minutes of safety meeting if taken.

Safety questions/issues raised:	Actions/Follow-up needed:
1. None	
2.	
3.	
4.	
5.	
6.	

Remarks: None

Meeting conducted by: Tyler Curley

EA Engineering, Science, and Technology, Inc.

DAILY SAFETY INSPECTION CHECKLIST
(TO BE COMPLETED EACH DAY OF CONSTRUCTION OR HTRW SITE ACTIVITIES)

Site: KAFB
Location: Well 106539
Project No.: 62590.M01
Client: USACE

Prepared by SSHO: Tyler Curley
Project Manager: Devon Derenzo
Date: 10/3/18

Rating	Y	N	N/A	Comments/Immediate Corrective Action[1]
Accident Prevention Plan (APP) and Site Safety and Health Plan (SSHP) General Requirements				
Are there new onsite personnel? • Did they receive pre-entry briefing and are their names recorded in field logbook or daily log? • Was the USACE PM made aware of the new personnel. • Required training and medical surveillance documentation received (e.g., 40-hr, 8 hr, etc.)?		✓		
Did personnel sign in/out of site?	✓			
Daily tailgate safety meetings conducted and documented?	✓			
Were new activities performed today? Were hazards identified, discussed during the daily safety tailgate, and incorporated into revised APP/SSHP?		✓		
New materials brought on site? MSDSs available?		✓		
Exclusion (EZ), Contamination Reduction (CRZ), and Support Zones (SZ) delineated and enforced?	✓			
General housekeeping measures in place to prevent hazards?	✓			
Emergency Planning				
Were there any changes to emergency contact names, telephone numbers, or hospital? If so, were site personnel made aware and was information distributed/reposted.		✓		
Adequate safety equipment inventory available?	✓			
Fire extinguisher available (monthly inspection of extinguisher will suffice)	✓			
Eyewash station(s) functioning and in place (weekly inspection of eye wash station will suffice)?	✓			
First aid supplies available (weekly inspection of first aid kit will suffice)?	✓			
Communication equipment readily available for emergencies?	✓			
Any reported accidents/incidents at this site? If so, were accident reporting procedures followed?		✓		
Air Monitoring				
Monitoring equipment specified in SSHP available and in working order? Air monitoring instrumentation for this site includes – check each if required/on site, note deficiencies in comments: • Combustible gas meter • Organic vapor analyzer • Contaminant specific analyzer for benzene (if total organic vapor concentrations exceed 0.5 ppm)			✓	
Monitoring equipment calibrated and calibration records			✓	

Y = Satisfactory or Yes; N = Unsatisfactory or No, N/A = Not applicable

Rating	Y	N	N/A	Comments/Immediate Corrective Action[1]
available?		✓		
Environmental and personnel monitoring performed as specified in SSHP?		✓		
PPE				
Proper dermal protection worn by EA and subcontracted employees when handling/ contacting hazardous chemicals or contaminated environmental media?	✓			
Required PPE (hard hats, safety boots / shoes, eye protection with side shields, hearing protection) being worn by EA and subcontracted employees?	✓			
PPE inspection completed by SSHO?	✓			
Drill Rig Operations				
Daily rig inspection completed? Any equipment problems?	✓			
Drill rigs/elevated equipment maintaining minimum 10-ft distance from energized (50 kV) overhead power lines?	✓			
Investigation-derived Waste (IDW)				
Wastes properly staged, secured, and labeled at end of day?			✓	

Additional Comments:

Site Safety and Health Officer's Signature

Date 1-23-16

[1]If a deficiency is noted that cannot be immediately corrected, the SSHO will monitor the progress in correcting the deficiency and will document following:

- Date the deficiency was identified
- Description of the deficiency
- Name of the person responsible for correcting the deficiency
- Projected date of correction
- Actual date of correction.

HEALTH AND SAFETY ACTIVITY REPORT

Site: KAFB BFF Location: Well 106239

Weather Cond.: Sunny, cold Onsite Hours: From 0730 To 1630

Changes in PPE Levels[1]	Work Operations	Reasons for Change
None		

Site Safety and Health Plan Violations	Corrective Action Specified	Corrective Action Taken [2](yes/no)
None		

Observations and Comments:

None

Completed by: Tyler Curley Date: 1-23-16

Site Health and Safety Supervisor

[1]Only SSHO may change PPE levels, using only criteria specified in APP/SSHP.

[2]If a deficiency is noted that cannot be immediately corrected, the SSHO will monitor the progress in correcting the deficiency and will document following:

- Date the deficiency was identified
- Description of the deficiency
- Name of the person responsible for correcting the deficiency
- Projected date of correction
- Actual date of correction.

From:	Curley, Tyler
To:	"Trent.Simpler@usace.army.mil"; "Amy.E.Sanchez@usace.army.mil"; "Carlos.F.Salazar@usace.army.mil"; "Linda.Dreeland@usace.army.mil"; "Mark.J.Phaneuf@usace.army.mil"
Cc:	Jercinovic, Devon; McKeage, Kevin; Morse, Earl; Bowman, Matthew
Subject:	Activity Report for KAFB Well 106239 Conveyance Line Installation 31 January 2018
Date:	Wednesday, January 31, 2018 5:02:31 PM
Attachments:	Daily Field Activities Summary Report.pdf

Issues Today 31 Wednesday January 2018:

- None

Resolution of Issues:

- None

Work Performed:

- 1-30-18
  - Replaced the faulty UPS in the well 239 PLC
  - Completed the installation of the leak detection probe within the junction vault
- 1-31-18
  - Completed internal punch list

Installation Completion to Date: 100%

Work Planned for 1 February 2018:

- Site walk through with USACE at 1:00 P.M.

Please let me know if you need additional information.

Tyler Curley, P.E.
EA Engineering, Science, and Technology, Inc., PBC
320 Gold Avenue, SW Suite 1300
Albuquerque, NM 87120
(505) 715-4422 work
(719) 688-9558 cell
tcurley@eaest.com

DAILY FIELD ACTIVITIES SUMMARY REPORT		
PROJECT NAME: KAFB Well 106239 Conveyance Line Installation		
Date: 1-31-18	Time Shift Beginning: 0900	Time Shift Ending: 1100
Project Number: 62599DM01		Contract/Task Order No.:
Client: USACE		Report By: Tyler Curley
Contractor(s): Wilson Electric		Project Manager: Devon Jercinovic
Design Manager:		Oversight Manager: Tyler Curley
Design Engineer: George Nemeth		Site Engineer: Tyler Curley
Weather: Sunny 50° F		Logbook Number: NA
Personnel Onsite:	**Name:**	**Reason for Being Onsite:**
EA	Tyler Curley Pete Ferrari	Construction/Safety Oversight
I&C Solution	Fred Tillies Joseph Manning	Start-up Testing

Work Performed:

Planned Activities:

- Complete Extraction well start up testing

Completed Activities:

- 1-30-18
  - Replaced the faulty UPS in the well 239 PLC
  - Completed the installation of the leak detection probe within the junction vault
- 1-31-18
  - Completed internal punch list

Material Deliveries:

- None

Construction Quality Control Activities or Samples Collected:

- None

Observations or Possible Variations from Specifications:

- None

Anticipated Activities for the Following Day:

- Thursday: Site walk through with USACE

Planned Material Deliveries:

- None

Contractor Reports, Manifests, Documents Reviewed and Logged:

- None

Report Completed By:

Tyler Curley	Date: 31 January 2018

EA Engineering, Science, and Technology, Inc

Employee/Visitor Register and Safety Brief				
Date: 2-1-18				
Site Entry/Exit		Name (Printed)	Signature	Company
Time In	Time Out			
1255		Tyler Curley		EA
1255		Todd Cleveland		USACE
1300		Kevin McKeage		EA
1300		Phillip Johnson		RMCI
1311		Jerry Patton		RMCI
1311		Amy Sanchez		USACE

From:	McKeage, Kevin
To:	Trent Simpler; Amy Sanchez; Carlos Salazar; Mark Phaneuf; "Dreeland, Linda SPA"
Cc:	Jercinovic, Devon; Morse, Earl
Subject:	Activity Report for KAFB-106239 and Sand Filter Shakedown 5 February 2018
Date:	Monday, February 05, 2018 7:34:09 PM

Issues Today 5 Monday February 2018:

- None

Resolution of Issues:

- None

Work Performed Today:

- Assisted Groundhog with initial run of the train 2 sand filters.
- Tested backwash alarm, and programming for train 2.
- Returned well KAFB-106228 to continuous operation.
- Returned train 2 to continuous operation.
- Operated well KAFB-106239 from approximately 0930 to 1400.
- Collected the first set of daily samples from influent, between GAC, and effluent of trains 1 and 2 as well as from the KAFB-106239 wellhead.
    - First set of samples was collected with train 1 processing water from KAFB-106233 and KAFB-106234 and train 2 processing water from KAFB-106228 and KAFB-106239.
    - The trains were isolated at the influent pipe tree and pump skid intake piping.
    - All KAFB-106239 water was processed to the golf course.
    - The system was run for approximately 90 minutes following the shutdown of KAFB-106239, unisolated at the influent pipe tree, to clear KAFB-106239 water from the system to the golf course.
    - Water was then discharged to KAFB-7 overnight.
    - KAFB-106239 was sampled at 1255.
    - Train 2 samples were collected at 1325, 1340, and 1350 at the effluent, between the GACs, and influent, respectively. A duplicate was collected on train 2's effluent.
    - Train 1 samples were collected at 1400, 1415, and 1420 at the effluent, between the GACs, and influent, respectively.
- Shipped the first set of daily samples for 7-day turn around on results.

Shakedown Completion to Date: 9%

Work Planned for 6 Tuesday February 2018:

- Operate well KAFB-106239 for 3 hours minimum.
- Collect second set of daily samples from influent, between GAC, and effluent of trains 1 and 2 as well as from the KAFB-106239 wellhead while KAFB-106239 is operational.
- Ship second set of daily samples for 7-day turn around on results.

Please let me know if you need additional information.

Kevin McKeage
Engineer I

Cell: (316) 765-1486
Direct Dial: (505) 933-6417
Office: (505) 224-9013 Ext. 1517
Fax: (505) 224-9016
kmckeage@eaest.com

EA Engineering, Science, and Technology, Inc., PBC
320 Gold Ave, Suite. 1300
Albuquerque, NM 87102
www.eaest.com

From:	McKeage, Kevin
To:	"Simpler, Trent W CIV USARMY CESPA (US)"; "Amy Sanchez"; Carlos Salazar; Mark Phaneuf; "Linda Dreeland"
Cc:	Jercinovic, Devon; Morse, Earl
Subject:	Activity Report for KAFB-106239 and Sand Filter Shakedown 6 February 2018
Date:	Tuesday, February 06, 2018 4:50:00 PM

Issues Today 6 Tuesday February 2018:

- None

Resolution of Issues:

- None

Work Performed Today:

- First set of daily samples for 7-day turn around on results arrived and were accepted at the laboratory.
- Operated well KAFB-106239 from approximately 0945 to 1315.
- Collected the second set of daily samples from influent, between GAC, and effluent of trains 1 and 2 as well as from the KAFB-106239 wellhead.
    - Second set of samples was collected with train 1 processing water from KAFB-106233 and KAFB-106234 and train 2 processing water from KAFB-106228 and KAFB-106239.
    - The trains were isolated at the influent pipe tree and pump skid intake piping.
    - All KAFB-106239 water was processed to the golf course.
    - The system was run for approximately 90 minutes following the shutdown of KAFB-106239, unisolated at the influent pipe tree, to clear KAFB-106239 water from the system to the golf course.
    - Water was then discharged to KAFB-7 overnight.
    - KAFB-106239 was sampled at 1130.
    - Train 2 samples were collected at 1210, 1218, and 1225 at the effluent, between the GACs, and influent, respectively.
    - Train 1 samples were collected at 1240, 1245, and 1255 at the effluent, between the GACs, and influent, respectively.
- Shipped the second set of daily samples for 7-day turn around on results.

Shakedown Completion to Date: 18%

Work Planned for 7 Wednesday February 2018:

- Operate well KAFB-106239 for 3 hours minimum.
- Collect third set of daily samples from influent, between GAC, and effluent of trains 1 and 2 while KAFB-106239 is operational.
- Ship third set of daily samples for standard turn around on results.

Please let me know if you need additional information.

Kevin McKeage, E.I.
Engineer
Cell: (316) 765-1486
Office: (505) 933-6417
kmckeage@eaest.com
EA Engineering, Science, and Technology, Inc., PBC
320 Gold Ave, Suite. 1300
Albuquerque, NM 87102
www.eaest.com

From:	McKeage, Kevin
To:	"Simpler, Trent W CIV USARMY CESPA (US)"; "Amy Sanchez"; "Carlos Salazar"; "Mark Phaneuf"; "Linda Dreeland"
Cc:	Jercinovic, Devon; Morse, Earl
Subject:	Activity Report for KAFB-106239 and Sand Filter Shakedown 7 February 2018
Date:	Wednesday, February 07, 2018 5:06:00 PM

Issues Today 7 Wednesday February 2018:

- None

Resolution of Issues:

- None

Work Performed Today:

- Second set of daily samples for 7-day turn around on results arrived and were accepted at the laboratory.
- Operated well KAFB-106239 from approximately 0845 to 1430.
- Collected the third set of daily samples from influent, between GAC, and effluent of trains 1 and 2.
    - Third set of samples was collected with train 1 processing water from KAFB-106233 and KAFB-106234 and train 2 processing water from KAFB-106228 and KAFB-106239.
    - The trains were isolated at the influent pipe tree and pump skid intake piping.
    - All KAFB-106239 water was processed to the golf course.
    - The system was run for approximately 90 minutes following the shutdown of KAFB-106239, unisolated at the influent pipe tree, to clear KAFB-106239 water from the system to the golf course.
    - Water was then discharged to KAFB-7 overnight.
    - Train 2 samples were collected at 1238, 1255, and 1310 at the effluent, between the GACs, and influent, respectively.
    - Train 1 samples were collected at 1320, 1340, and 1350 at the effluent, between the GACs, and influent, respectively.
- Shipped the third set of daily samples for 7-day turn around on results.

Shakedown Completion to Date: 27%

Work Planned for 8 Thursday February 2018:

- Operate well KAFB-106239 for 3 hours minimum.
- Collect fourth set of daily samples from influent, between GAC, and effluent of trains 1 and 2 while KAFB-106239 is operational.
- Ship fourth set of daily samples for standard turn around on results.

Please let me know if you need additional information.

Kevin McKeage, E.I.
Engineer

Cell: (316) 765-1486
Office: (505) 933-6417
kmckeage@eaest.com

EA Engineering, Science, and Technology, Inc., PBC
320 Gold Ave, Suite. 1300
Albuquerque, NM 87102
www.eaest.com

From:	McKeage, Kevin
To:	"Simpler, Trent W CIV USARMY CESPA (US)"; "Amy Sanchez"; "Carlos Salazar"; "Mark Phaneuf"; "Linda Dreeland"
Cc:	Jercinovic, Devon; Morse, Earl
Subject:	Activity Report for KAFB-106239 and Sand Filter Shakedown 8 February 2018
Date:	Thursday, February 08, 2018 4:03:00 PM

Issues Today 8 Thursday February 2018:

- None

Resolution of Issues:

- None

Work Performed Today:

- Third set of daily samples arrived and were accepted at the laboratory.
- Operated well KAFB-106239 from approximately 0817 to 1304.
- Collected the fourth set of daily samples from influent, between GAC, and effluent of trains 1 and 2.
    - Fourth set of samples was collected with train 1 processing water from KAFB-106233 and KAFB-106234 and train 2 processing water from KAFB-106228 and KAFB-106239.
    - The trains were isolated at the influent pipe tree and pump skid intake piping.
    - All KAFB-106239 water was processed to the golf course.
    - The system was run for approximately 90 minutes following the shutdown of KAFB-106239, unisolated at the influent pipe tree, to clear KAFB-106239 water from the system to the golf course.
    - Water was then discharged to KAFB-7 overnight.
    - Train 2 samples were collected at 1240, 1245, and 1255 at the effluent, between the GACs, and influent, respectively.
    - Train 1 samples were collected at 1210, 1225, and 1230 at the effluent, between the GACs, and influent, respectively. A duplicate was collected from Train 1's effluent.
- Shipped the fourth set of daily samples.

Shakedown Completion to Date: 36%

Work Planned for 9 Friday February 2018:

- Operate well KAFB-106239 for 3 hours minimum.
- Collect fifth set of daily samples from influent, between GAC, and effluent of trains 1 and 2 while KAFB-106239 is operational.
- Ship fifth set of daily samples for Saturday delivery and standard turn around on results.

Please let me know if you need additional information.

Kevin McKeage, E.I.
Engineer

Cell: (316) 765-1486
Office: (505) 933-6417
kmckeage@eaest.com

EA Engineering, Science, and Technology, Inc., PBC
320 Gold Ave, Suite. 1300
Albuquerque, NM 87102
www.eaest.com

From:	McKeage, Kevin
To:	"Simpler, Trent W CIV USARMY CESPA (US)"; "Amy Sanchez"; "Carlos Salazar"; "Mark Phaneuf"; "Linda Dreeland"
Cc:	Jercinovic, Devon; Morse, Earl
Subject:	Activity Report for KAFB-106239 and Sand Filter Shakedown 9 February 2018
Date:	Friday, February 09, 2018 4:27:00 PM

Issues Today 9 Friday February 2018:

- None

Resolution of Issues:

- None

Work Performed Today:

- Fourth set of daily samples arrived and were accepted at the laboratory.
- Operated well KAFB-106239 from approximately 0825 to 1417.
- Collected the fifth set of daily samples from influent, between GAC, and effluent of trains 1 and 2.
    - Fifth set of samples was collected with train 1 processing water from KAFB-106233 and KAFB-106234 and train 2 processing water from KAFB-106228 and KAFB-106239.
    - The trains were isolated at the influent pipe tree and pump skid intake piping.
    - All KAFB-106239 water was processed to the golf course.
    - The system was run for greater than 90 minutes following the shutdown of KAFB-106239, unisolated at the influent pipe tree, to clear KAFB-106239 water from the system to the golf course.
    - Water was then discharged to KAFB-7 overnight.
    - Train 2 samples were collected at 1310, 1330, and 1340 at the effluent, between the GACs, and influent, respectively.
    - Train 1 samples were collected at 1345, 1350, and 1355 at the effluent, between the GACs, and influent, respectively.
- Shipped the fifth set of daily samples.

Shakedown Completion to Date: 45%

Work Planned for 10 Saturday February 2018:

- Operate well KAFB-106239 for 3 hours minimum.
- Collect sixth set of daily samples from influent, between GAC, and effluent of trains 1 and 2 while KAFB-106239 is operational.
- Refrigerate sixth set of daily samples for Monday shipping and standard turn around on results.

Please let me know if you need additional information.

Kevin McKeage, E.I.
Engineer

Cell: (316) 765-1486
Office: (505) 933-6417
kmckeage@eaest.com

EA Engineering, Science, and Technology, Inc., PBC
320 Gold Ave, Suite. 1300
Albuquerque, NM 87102
www.eaest.com

From:	McKeage, Kevin
To:	Trent Simpler; Amy Sanchez; Carlos Salazar; Mark Phaneuf; "Dreeland, Linda SPA"
Cc:	Jercinovic, Devon; Morse, Earl
Subject:	Activity Report for KAFB-106239 and Sand Filter Shakedown 10 and 11 February 2018
Date:	Sunday, February 11, 2018 5:15:47 PM

Issues Yesterday 10 Saturday and Today 11 Friday February 2018:

- None

Resolution of Issues:

- None

Work Performed Yesterday

- Fifth set of daily samples arrived and were accepted at the laboratory.
- Operated well KAFB-106239 from approximately 0937 to 1220.
- Collected the sixth set of daily samples from influent, between GAC, and effluent of trains 1 and 2.
    - Sixth set of samples was collected with train 1 processing water from KAFB-106233 and KAFB-106234 and train 2 processing water from KAFB-106228 and KAFB-106239.
    - The trains were isolated at the influent pipe tree and pump skid intake piping.
    - All KAFB-106239 water was processed to the golf course.
    - The system was run for greater than 90 minutes following the shutdown of KAFB-106239, unisolated at the influent pipe tree, to clear KAFB-106239 water from the system to the golf course.
    - Water was then discharged to KAFB-7 overnight.
    - Train 2 samples were collected at approximately 1130, 1135, and 1145 at the effluent, between the GACs, and influent, respectively.
    - Train 1 samples were collected at approximately 1155, 1205, and 1215 at the effluent, between the GACs, and influent, respectively.
- Held the sixth set of daily samples for Monday shipping.

Work Performed Today:

- Sixth set of daily samples held for Monday shipping.
- Operated well KAFB-106239 from approximately 1000 to 1330.
- Collected the seventh set of daily samples from influent, between GAC, and effluent of trains 1 and 2.
    - Seventh set of samples was collected with train 1 processing water from KAFB-106233 and KAFB-106234 and train 2 processing water from KAFB-106228 and KAFB-106239.
    - The trains were isolated at the influent pipe tree and pump skid intake piping.
    - All KAFB-106239 water was processed to the golf course.
    - The system was run for greater than 90 minutes following the shutdown of KAFB-106239, unisolated at the influent pipe tree, to clear KAFB-106239

water from the system to the golf course.
    - Water was then discharged to KAFB-7 overnight.
    - Train 2 samples were collected at approximately 1200, 1205, and 1215 at the effluent, between the GACs, and influent, respectively.
    - Train 1 samples were collected at approximately 1225, 1235, and 1245 at the effluent, between the GACs, and influent, respectively.
- Held the seventh set of daily samples for Monday shipping.

Shakedown Completion to Date: 64%

Work Planned for the Week of 12 Monday February 2018:

- Operate well KAFB-106239 for 3 hours minimum per day.
- Collect the first set of weekly samples from influent, between GAC, and effluent of trains 1 and 2 while KAFB-106239 is operational on 15 Thursday February 2018.
- Collect annual wellhead samples from all 4 extraction wells on 15 Thursday February 2018.
- Refrigerate sixth and seventh set of daily samples for Monday shipping and standard turn around on results.

Please let me know if you need additional information.

Kevin McKeage, E.I.
Engineer

Cell: (316) 765-1486
Office: (505) 933-6417
kmckeage@eaest.com

EA Engineering, Science, and Technology, Inc., PBC
320 Gold Ave, Suite. 1300
Albuquerque, NM 87102
www.eaest.com

From:	McKeage, Kevin
To:	Trent Simpler; Amy Sanchez; Carlos Salazar; Mark Phaneuf; "Dreeland, Linda SPA"
Cc:	Jercinovic, Devon; Morse, Earl; Curley, Tyler; Bowman, Matthew
Subject:	Activity Report for KAFB-106239 Conveyance Line Installation 13 February 2018
Date:	Tuesday, February 13, 2018 6:30:34 PM
Attachments:	Photos 02-13-18.pdf

Issues Today 13 Tuesday February 2018:

- None

Resolution of Issues:

- None

Work Performed Today:

Completed punch list items

- Installed security bolts on the well vault hatches.
- Raked gravel over exposed geotextile near the electrical pad.
- Frosted the VFD panel glass.
- Added locks to VFD lever, transformer meter, and any remaining unlocked panels.
- Installed hose barb and drain line onto KAFB-106239 vault ARV so that the ARV drains to a 5 gallon bucket (yesterday).

Work In Progress:

Remaining punch list items

- Add gravel mulch in front of the electrical pad transformer.
- Install privacy fence along street side of electrical equipment rack.
- Remove emergency stop button from PLC cabinet.
- List Voltage on Pull Boxes.
- Replace hex head bolts on pull boxes with pentahead bolts and provide a pentahead socket for access.

Thank you,
Kevin McKeage
Engineer I

Cell: (316) 765-1486
Direct Dial: (505) 933-6417
Office: (505) 224-9013 Ext. 1517
Fax: (505) 224-9016
kmckeage@eaest.com

EA Engineering, Science, and Technology, Inc., PBC
320 Gold Ave, Suite. 1300
Albuquerque, NM 87102
www.eaest.com

Location: KAFB-106239 Wellhead
Description: Installed ARV Overflow Hose
Date: 13 February 2018 Direction: East

Location: KAFB-106239 Wellhead
Description: Security Bolts
Date: 13 February 2018 Direction: Down

Location: KAFB-106239 Electrical Pad
Description: Installed Locks on All Panels
Date: 13 February 2018 Direction: North

Location: KAFB-106239 Electrical Pad
Description: Installed Locks on All Panels
Date: 13 February 2018 Direction: North

Location: KAFB-106239 Electrical Pad
Description: Installed Locks on All Panels
Date: 13 February 2018 Direction: West

Location: KAFB-106239 Wellhead
Description: Installed Glass Frosting on VFD Panel
Date: 13 February 2018 Direction: South

From:	McKeage, Kevin
To:	Trent Simpler; Amy Sanchez; Carlos Salazar; Mark Phaneuf; "Dreeland, Linda SPA"
Cc:	Jercinovic, Devon; Morse, Earl
Subject:	Activity Report for KAFB-106239 and Sand Filter Shakedown 15 February 2018
Date:	Thursday, February 15, 2018 9:19:45 PM

Issues Today 15 Thursday February 2018:

- None

Resolution of Issues:

- None

Work Performed Today:

- Both the sixth and seventh sets of daily samples were received and accepted by the lab on 13FEB18.
- Operated well KAFB-106239 from approximately 0800 to 1510.
- Collected annual wellhead samples from all four extraction wells (including back ground geochemical analytes, DP-1839 Table 5)
    - KAFB-106228 at 1115
    - KAFB-106233 at 1035
    - KAFB-106234 at 1050
    - KAFB-106239 at 1135
- Collected the first set of weekly samples from influent, between GAC, and effluent of trains 1 and 2 (Effluent samples included back ground geochemical analytes, DP-1839 Table 5).
    - First set of samples was collected with train 1 processing water from KAFB-106233 and KAFB-106234 and train 2 processing water from KAFB-106228 and KAFB-106239.
    - The trains were isolated at the influent pipe tree and pump skid intake piping.
    - All KAFB-106239 water was processed to the golf course.
    - The system was run for greater than 90 minutes following the shutdown of KAFB-106239, unisolated at the influent pipe tree, to clear KAFB-106239 water from the system to the golf course.
    - Water was then discharged to KAFB-7 overnight.
    - Train 2 samples were collected at approximately 1305, 1352, and 1400 at the effluent, between the GACs, and influent, respectively.
    - Train 1 samples were collected at approximately 1415, 1425, and 1430 at the effluent, between the GACs, and influent, respectively.
- Shipped the First set of weekly samples.

Shakedown Completion to Date: 73%

Work Planned for the 22 Thursday February 2018:

- Operate well KAFB-106239 for 3 hours minimum per day through 22FEB18, or until

permission is granted to run KAFB-106239 to KAFB-7 (resulting in continuous operation).
- Collect the second set of weekly samples from influent, between GAC, and effluent of trains 1 and 2 while KAFB-106239 is operational.

Please let me know if you need additional information.

Kevin McKeage, E.I.
Engineer

Cell: (316) 765-1486
Office: (505) 933-6417
kmckeage@eaest.com

EA Engineering, Science, and Technology, Inc., PBC
320 Gold Ave, Suite. 1300
Albuquerque, NM 87102
www.eaest.com

From:	McKeage, Kevin
To:	"Simpler, Trent W CIV USARMY CESPA (US)"; "Amy Sanchez"; "Mark Phaneuf"; "Linda Dreeland"; "Carlos Salazar"
Cc:	Jercinovic, Devon; Curley, Tyler
Subject:	Kirtland BFF - Activity Report for KAFB-106239 Conveyance Line Installation 20 February 2018
Date:	Tuesday, February 20, 2018 5:08:00 PM
Attachments:	Photos 02-20-18.pdf

Issues Today 20 Tuesday February 2018:

- None

Resolution of Issues:

- None

Work Performed:

- Removed Silt Fence

Work Planned for 21 February 2018:

- Deliver and place gravel near the electrical pad transformer (remaining punch list item)
- Repair landscaping where the silt fence was removed

Work In Progress:

Remaining punch list items

- Add gravel mulch in front of the electrical pad transformer
- Install privacy fence along street side of electrical equipment rack
- Remove emergency stop button from PLC cabinet
- List Voltage on Pull Boxes
- Replace hex-head bolts on pull boxes with penta-head bolts and provide a penta-head socket for access

Please let me know if you need additional information.

Kevin McKeage, E.I.
Engineer
Cell: (316) 765-1486
Office: (505) 933-6417
kmckeage@eaest.com
EA Engineering, Science, and Technology, Inc., PBC
320 Gold Ave, Suite. 1300
Albuquerque, NM 87102
www.eaest.com

Location: Station 25+00
Description: Removal of Silt Fence
Date: 20 February 2018 Direction: West

Location: KAFB-106239 Wellhead
Description: Removal of Silt Fence
Date: 20 February 2018 Direction: East

From:	McKeage, Kevin
To:	Trent Simpler; Amy.E.Cordova@usace.army.mil; Carlos Salazar; Mark Phaneuf; "Dreeland, Linda SPA"
Cc:	Jercinovic, Devon; Curley, Tyler
Subject:	Activity Report for KAFB-106239 and Sand Filter Shakedown 22 February 2018
Date:	Thursday, February 22, 2018 9:37:18 PM

Issues Today 22 Thursday February 2018:

- The train 2 influent skid high pressure switch failed causing the train to be shutdown for several hours while troubleshooting commenced.

Resolution of Issues:

- The switch will need to be replaced. Until the new switch is installed, the pressure switch has been bypassed. Train 2 will only be in operation when an operator is present in the plant and can respond in the unlikely event of a high pressure event. This will also ensure that weekly monitoring can be performed on each train as planned. The operator will shutdown the train and lock the skid VFDs into manual mode (off) when not present, so that the skids cannot be remotely started. While train 2 is offline, well KAFB-106233 must also be shutdown due to the capacity limit associated with running a single train.

Work Performed Today:

- The first set of weekly samples was received and accepted by the lab on 16FEB18.
- Operated well KAFB-106239 continuously (excluding routine maintenance shutdowns).
- Collected weekly wellhead samples from extraction well KAFB-106239 at 1320.
- Collected the second set of weekly samples from influent, between GAC, and effluent of trains 1 and 2.
    - The second set of samples was collected with train 1 processing water from KAFB-106228, KAFB-106234, and KAFB-106239 and train 2 processing blended water from all four extraction wells.
    - All treated water is discharged to KAFB-7.
    - Train 2 samples were collected at approximately 1515, 1525, and 1530 at the effluent, between the GACs, and influent, respectively.
    - Train 1 samples were collected at approximately 1345, 1400, and 1415 at the effluent, between the GACs, and influent, respectively. A duplicate sample was obtained from the train 1 effluent.
- Shipped the second set of weekly samples.

Shakedown Completion to Date: 82%

Work Planned for the 1 Thursday March 2018:

- Operate well KAFB-106239 continuously.
- Collect the third set of weekly samples from influent, between GAC, and effluent of trains 1 and 2 while KAFB-106239 is operational.

Please let me know if you need additional information.

Kevin McKeage, E.I.
Engineer

Cell: (316) 765-1486
Office: (505) 933-6417
kmckeage@eaest.com

EA Engineering, Science, and Technology, Inc., PBC
320 Gold Ave, Suite. 1300
Albuquerque, NM 87102
www.eaest.com

From:	McKeage, Kevin
To:	"Simpler, Trent W CIV USARMY CESPA (US)"; "Amy Sanchez"; "Carlos Salazar"; "Mark Phaneuf"; "Linda Dreeland"
Cc:	Jercinovic, Devon; Curley, Tyler
Subject:	Kirtland BFF - Activity Report for KAFB-106239 and Sand Filter Shakedown 23 February 2018
Date:	Friday, February 23, 2018 2:31:00 PM
Attachments:	Photos 02-23-18.pdf

Issues Today 23 Friday February 2018:

- None

Resolution of Issues:

- None

Work Performed:

KAFB-106239

- Added gravel mulch around the electrical pad
- Repaired landscaping where the silt fence was removed
- Emergency Stop button on the KAFB-106239 has been disabled

GWTS

- Determined the cause of the high pressure switch failure on the train 2 influent skid. The switch has been repaired and is in service.
- Pump A on the train 1 influent skid was realigned to correct vibrations detected when running the influent skid at high flowrates.

The GWTS has returned to full operation for this upcoming weekend. Both trains and all extraction wells are operable. Both chlorine injection pumps were restarted at an injection rate of 200 mL/hr utilizing the new polyethylene feed tubing. All treated water will be discharged to KAFB-7.

The second set of weekly samples arrived and were accepted by the laboratory today. The second set of weekly shakedown samples double as the regular monthly GWTS samples.

Work Planned for the Week of 26 Monday February 2018:

Remaining punch list items

- Install privacy fence along street side of electrical equipment rack (materials to arrive and pending installation early next week)
- List Voltage on Pull Boxes (materials have arrived, pending installation early next week)
- Replace hex-head bolts on pull boxes with penta-head bolts and provide a penta-head socket for access (materials have arrived, pending installation early next week)

EA will closeout remaining permits associated with the conveyance line installation and perform the final walk through with the City of Albuquerque on 27FEB18.

Please let me know if you need additional information.

Kevin McKeage, E.I.
Engineer

Cell: (316) 765-1486
Office: (505) 933-6417
kmckeage@eaest.com

EA Engineering, Science, and Technology, Inc., PBC
320 Gold Ave, Suite. 1300
Albuquerque, NM 87102
www.eaest.com

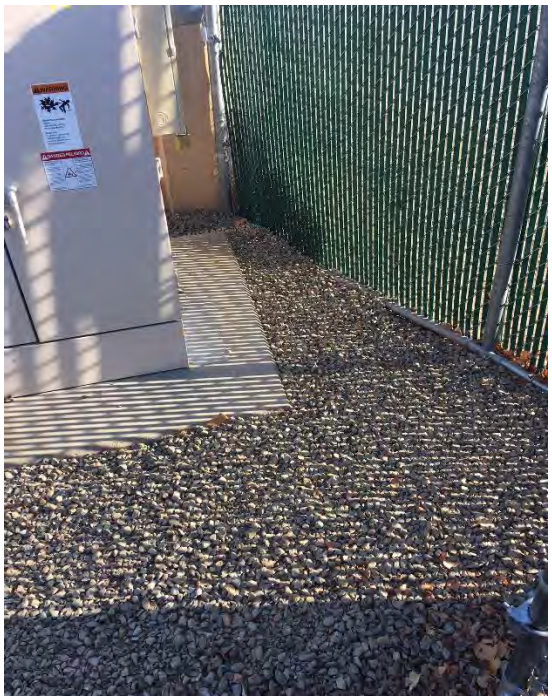

Location: KAFB-106239 Electrical Pad
Description: Additional Gravel Mulch
Date: 23 February 2018 Direction: North

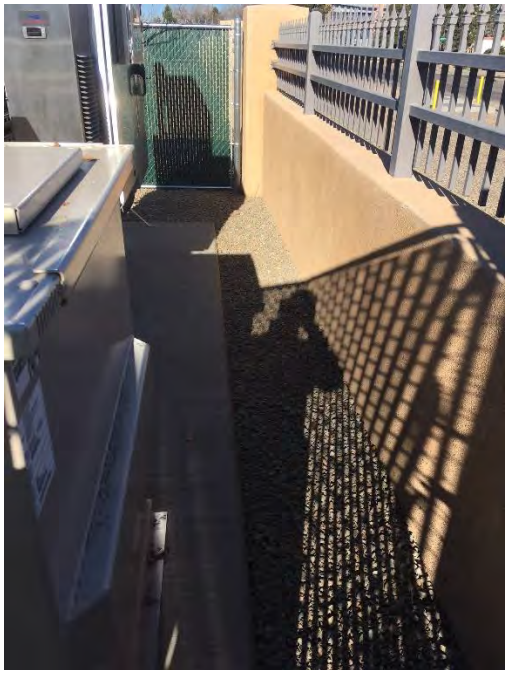

Location: KAFB-106239 Electrical Pad
Description: Additional Gravel Mulch
Date: 23 February 2018 Direction: West

Location: Station 4+00
Description: Smoothed out gravel mulch where silt fence had been
Date: 23 February 2018 Direction: East

Location: Station 19+00
Description: Smoothed out gravel mulch where silt fence had been
Date: 23 February 2018 Direction: West

From:	McKeage, Kevin
To:	Trent Simpler; CORDOVA, AMY ELIZABETH CIV USARMY CESPA (US); Mark Phaneuf; "Dreeland, Linda SPA"; Carlos Salazar
Cc:	Jercinovic, Devon; Curley, Tyler
Subject:	Kirtland BFF - Activity Report for KAFB-106239 Conveyance Line Installation 27 February 2018
Date:	Tuesday, February 27, 2018 7:26:06 PM
Attachments:	Photos 02-27-18.pdf

Issues Today 27 Tuesday February 2018:

- None

Resolution of Issues:

- None

Work Performed:

- City of Albuquerque Final Inspection
- Installed privacy fence along street side of electrical equipment rack
- Listed Voltage on Pull Boxes
- Replaced hex-head bolts on pull boxes with penta-head bolts and provided a penta-head socket for access

Remaining Work Planned:

- Complete City of Albuquerque Work Order closeout.

Please let me know if you need additional information.

Kevin McKeage, E.I.
Engineer
Cell: (316) 765-1486
Office: (505) 933-6417
kmckeage@eaest.com
EA Engineering, Science, and Technology, Inc., PBC
320 Gold Ave, Suite. 1300
Albuquerque, NM 87102
www.eaest.com

Location: KAFB-106239 Electrical Pull Boxes
Description: Added Voltage Labels
Date: 27 February 2018 Direction: Down

Location: KAFB-106239 Electrical Pad
Description: Added Panel Safety Labels
Date: 27 February 2018 Direction: North

Location: KAFB-106239 Electrical Pad
Description: Added Panel Safety Labels
Date: 27 February 2018 Direction: North

Location: KAFB-106239 Electrical Pad
Description: Added Panel Safety Labels
Date: 27 February 2018 Direction: South

Location: KAFB-106239 Electrical Pad
Description: Added Panel Safety Labels
Date: 27 February 2018 Direction: South

Location: KAFB-106239 Electrical Pad
Description: Added Privacy Fencing
Date: 27 February 2018 Direction: South

Location: KAFB-106239 Electrical Pad
Description: Added Privacy Fencing
Date: 27 February 2018 Direction: Northwest

Location: KAFB-106239 Electrical Pull Boxes
Description: Added Penta-head Bolts
Date: 27 February 2018 Direction: Down

Location: KAFB-106228 Reroute Controls Pull Boxes
Description: Added Low Voltage Labels
Date: 27 February 2018 Direction: Down

Kirtland AFB BFF Project
KAFB-106239 Conveyance Line Expansion – Final Inspection
City of Albuquerque Project Number 586082
27 February 2017

Name	Organization	Phone	E-mail Address
Devon Jercinovic	EA Engineering	401-1181	djercinovic@eaest.com
Phillip Johnson	RMCI	235-1850	pjohnson@rmciinc.com
Kevin McKeage	EA Engineering	316-765-1486	kmckeage@eaest.com
Amy Cordova	USACE	505-615-5095	amy.e.cordova@usace.army.mil
Jerry Patton	RMCI	505-206-2312	jpatton@rmciinc
Tyler Curley	EA	719-686-9558	tcurley@eaest.com
ARLENE SANDOVAL	COA	505-489-0008	arsandoval@cabq.gov
Doug Rizor	COA - streets	505-857-8032	drizor@cabq.gov
Vesel Jensen	COA - Streets	505-768-3842	vjensen@cabq.gov
Muhammed Adeeb	COA - Const. Eng.	505-250-2604	madeeb@cabq.gov

From:	McKeage, Kevin
To:	Simpler, Trent W CIV USARMY CESPA (US); Amy Sanchez; Salazar, Carlos F CIV USARMY CESPA (US); Phaneuf, Mark J CIV USARMY CESPA (US); Linda Dreeland
Cc:	Jercinovic, Devon; Curley, Tyler
Subject:	Kirtland BFF - Activity Report for KAFB-106239 and Sand Filter Shakedown 1 March 2018
Date:	Thursday, March 01, 2018 5:02:17 PM

Issues Today 1 Thursday March 2018:

- None

Resolution of Issues:

- None

Work Performed Today:

- The second set of weekly samples was received and accepted by the lab on 23FEB18.
- Operated well KAFB-106239 continuously (excluding routine maintenance shutdowns).
- Collected third set of weekly wellhead samples from extraction well KAFB-106239 at 1050.
- Collected the third set of weekly samples from influent, between GAC, and effluent of trains 1 and 2.
    - The third set of samples was collected with train 1 processing water from KAFB-106234 and KAFB-106233 and train 2 processing water from KAFB-106228 and KAFB-106239.
    - The chlorine injection pumps were in operation each dosing 200 mL/hr of 8.25% sodium hypochlorite solution. The manufacturer recommended range for free chlorine upstream of the sand filters is between 0.3 and 0.1 mg/L. Free chlorine was measured upstream and downstream of the sand filters for both trains. Train 1 measured 0.22 mg/L upstream and 0.03 mg/L downstream of the sand filters at 1440. Train 2 measured 0.28 mg/L upstream and 0.16 mg/L downstream of the sand filters at 1455. The incomplete catalysis of the free chlorine in Train 2 may be attributed to different lengths of media conditioning time. EA will continue to monitor free chlorine concentrations both upstream and downstream of the sand filters.
    - All treated water was discharged to KAFB-7.
    - Train 2 samples were collected at approximately 1115, 1125, and 1135 at the effluent, between the GACs, and influent, respectively.
    - Train 1 samples were collected at approximately 1145, 1200, and 1215 at the effluent, between the GACs, and influent, respectively. A duplicate sample was obtained from the train 1 effluent.
- Shipped the second set of weekly samples.

Shakedown Completion to Date: 91%

Work Planned for 8 Thursday March 2018:

- Operate well KAFB-106239 continuously.
- Collect the fourth and final set of weekly samples from influent, between GAC, and effluent of trains 1 and 2 while KAFB-106239 is operational.

Please let me know if you need additional information.

Thank you,
Kevin McKeage, E.I.
Engineer
Cell: (316) 765-1486
Office: (505) 933-6417
kmckeage@eaest.com
EA Engineering, Science, and Technology, Inc., PBC
320 Gold Ave, Suite. 1300
Albuquerque, NM 87102
www.eaest.com

From:	McKeage, Kevin
To:	Simpler, Trent W CIV USARMY CESPA (US); Amy Sanchez; Salazar, Carlos F CIV USARMY CESPA (US); Phaneuf, Mark J CIV USARMY CESPA (US); Linda Dreeland
Cc:	Jercinovic, Devon; Curley, Tyler
Subject:	Kirtland BFF - Activity Report for KAFB-106239 and Sand Filter Shakedown 8 March 2018
Date:	Thursday, March 08, 2018 5:22:00 PM

Issues Today 8 Thursday March 2018:

- None

Resolution of Issues:

- None

Work Performed Today:

- The third set of weekly samples was received and accepted by the lab on 02MAR18.
- Operated well KAFB-106239 continuously (excluding routine maintenance shutdowns).
- Collected the fourth set of weekly samples from influent, between GAC, and effluent of trains 1 and 2.
    - The fourth set of samples was collected with train 1 processing water from KAFB-106234 and KAFB-106233 and train 2 processing water from KAFB-106228 and KAFB-106239.
    - The chlorine injection pumps were in operation each dosing 200 mL/hr of 8.25% sodium hypochlorite solution.
    - All treated water was discharged to the Golf Course Main Pond.
    - Train 2 samples were collected at approximately 1335, 1340, and 1346 at the effluent, between the GACs, and influent, respectively.
    - Train 1 samples were collected at approximately 1312, 1318, and 1326 at the effluent, between the GACs, and influent, respectively. A duplicate sample was obtained from the train 1 effluent.
- Shipped the fourth set of weekly samples.

Shakedown Completion to Date: 100%

Weekly shakedown sampling has been completed. The GWTS will return to monthly interval sampling of both treatment trains per O&M Plan requirements.

Please let me know if you need additional information.

Thank you,
Kevin McKeage, E.I.
Engineer
Cell: (316) 765-1486
Office: (505) 933-6417
kmckeage@eaest.com
EA Engineering, Science, and Technology, Inc., PBC
320 Gold Ave, Suite. 1300

Albuquerque, NM 87102
www.eaest.com

Fusion Weld Testing Form

Project: KAFB-106239 Conveyance Line
EA Project No: 62599DM01
Fusion Machine Model: McElroy TracStar
Length of Pipe Tested: Test Section

Date: 10/02/17
Operator: Jerry Patton

Inspection Results

Findings of visual inspection of weld bead: Bead is uniform and intact.

Findings of visual inspection of weld cross section: No indication of inclusions or vesicles.

Findings of visual inspection of test strips: Test strips do not show any issues with weld or weld bend.

Findings of bend test (4 attempts): Both 4" and 8" bend test succeeded with 4 out of 4 strips passing for each pipe diameter.

Is a new trial fusion required? No.

Signatures:

Accepted by Operator — Date: 10-2-17

Accepted by Construction Quality Inspector — Date: 10/02/17

Reviewed by Construction Quality Manager — Date: 10-04-17

Density Test Report

Project: KAFB Conveyance Line ☑ Revised
Client: **RMCI, Inc.** Report Date: 10/15/17
Address: **PO Box 91447** Date Tested: 10/13/2017
Albuquerque, NM 87119 Tested By: Abe Sandoval
Gauge Serial #: 179482
Model #: Troxler 3411
Field Report #: Z 1089-17 To Be Used For: Electrical Line Backfill from Transformer Pad to Well

Proctors on file: Lab #	Mark	Max Density (lbs/ft^3)	Optimum Moisture (%)	Type	Material	Location
ABQLL 246-17	**P2**	**114.5**	**12.3**	**Modified**	**Native Subgrade**	**On-site Material**

Test # D-6938	Location / Elevation of Density Test	Field Density	Field Moisture	% Compaction	Method BS or DT	Depth, inches	Spec	Proctor Used
D-1	Sta. 1+60 / -2' BFG	103.3	13.5	90%	DT	6	90	**P2**
D-2	Sta. 1+60 / -1' BFG	105.3	13.6	92%	DT	6	90	**P2**
D-3	Sta. 1+60 / FG	107.2	14.0	94%	DT	6	90	**P2**

Acronyms
R# - Retest # of Test #
BS - BackScatter
DT - Direct Transmission
TOSG - Top Of SubGrade
CL - CenterLine
BFG - Below Finish Grade
TOBC - Top of Base Course
FG - Finish Grade

Reports to: fax/email
Phillip Johnson pjohnson@rmciinc.com
Eric Hyde ehyde@rmciinc.com

Respectfully Submitted,

Mary Pena, Laboratory Supervisor

Concrete, Aggregate and Asphalt Testing, LLC
414 Bibb Industrial Dr.
P.O.Box 1228
Las Vegas, NM 87701
505-718-3030

Density Test Report

Project: KAFB Conveyance Line ☑ Revised
Client: **RMCI, Inc.** Report Date: 11/1/17
Address: **PO Box 91447** Date Tested: 10/30/2017
Albuquerque, NM 87119 Tested By: Daniel Marquez
Gauge Serial #: 11108
Model #: Troxler 3411
Field Report #: G1062-17 To Be Used For: Line Backfill

Proctors on file: Lab #	Mark	Max Density (lbs/ft^3)	Optimum Moisture (%)	Type	Material	Location
ABQ LL 245-17	**P1**	**100.1**	**14.2**	**Modified**	**Native Subgrade**	**Sta. 17+65**
ABQ LL 246-17	**P2**	**114.5**	**12.3**	**Modified**	**Native Backfill**	**Sta. 3+00**

Test # D-6938	Location / Elevation of Density Test	Field Density	Field Moisture	% Compaction	Method BS or DT	Depth, inches	Proctor Spec	Proctor Used
D-4	Sta. 8-40 / -2' BFG	96.6	12.2	97%	DT	4	90	**P1**
D-5	Sta. 8+40 / -1' BFG	100.1	13.2	100%	DT	4	90	**P1**
D-6	Sta. 8+40 / FG	98.3	10.2	98%	DT	4	90	**P1**
D-7	Sta. 4+40 / -2' BFG	105.7	12.8	92%	DT	4	90	**P2**
D-8	Sta. 4+40 / -1' BFG	107.0	12.4	93%	DT	4	90	**P2**
D-9	Sta. 4+40 / FG	102.8	11.1	90%	DT	4	90	**P2**

Acronyms
R# - Retest # of Test #
BS - BackScatter
DT - Direct Transmission
TOSG - Top Of SubGrade
CL - CenterLine
BFG - Below Finish Grade
TOBC - Top of Base Course
FG - Finish Grade

Reports to: fax/email
Phillip Johnson pjohnson@rmciinc.com
Eric Hyde ehyde@rmciinc.com

Respectfully Submitted,

Abe Sandoval

Abe Sandoval, Manager of Technical Services

Concrete, Aggregate and Asphalt Testing, LLC
414 Bibb Industrial Dr.
P.O.Box 1228
Las Vegas, NM 87701
505-718-3030

Density Test Report

Project: KAFB Conveyance Line ☑ Revised
Client: **RMCI, Inc.**
Address: **PO Box 91447**
Albuquerque, NM 87119
Field Report #: H1127-17

Report Date: 11/10/17
Date Tested: 11/8/2017
Tested By: David Marquez
Gauge Serial #: 11108
Model #: Troxler 3411
To Be Used For: Vault Pad Subgrade

Proctors on file: Lab #	Mark	Max Density (lbs/ft^3)	Optimum Moisture (%)	Type	Material	Location
ABQ LL 245-17	**P1**	**100.1**	**14.2**	**Modified**	**Native Subgrade**	**Sta. 17+65**
ABQ LL 246-17	**P2**	**114.5**	**12.3**	**Modified**	**Native Backfill**	**Sta. 3+00**

Test # D-6938	Location / Elevation of Density Test	Field Density	Field Moisture	% Compaction	Method BS or DT	Depth, inches	Proctor Spec	Proctor Used
D-10	Sta. 1+00; 2' Rt of CL / FG (Vault Subgrade)	112.0	13.3	98%	DT	4	95	**P2**
D-11	Sta. 1+08; on CL / FG (Vault Subgrade)	110.7	11.2	97%	DT	4	95	**P2**

Acronyms
R# - Retest # of Test #
BS - BackScatter
DT - Direct Transmission
TOSG - Top Of SubGrade
CL - CenterLine
BFG - Below Finish Grade
TOBC - Top of Base Course
FG - Finish Grade

Reports to: fax/email
Phillip Johnson pjohnson@rmciinc.com
Eric Hyde ehyde@rmciinc.com

Respectfully Submitted,

Abe Sandoval

Abe Sandoval, Manager of Technical Services

Concrete, Aggregate and Asphalt Testing, LLC
414 Bibb Industrial Dr.
P.O.Box 1228
Las Vegas, NM 87701
505-718-3030

Density Test Report

Project: KAFB Conveyance Line ☑ Revised
Client: **RMCI, Inc.**
Address: **PO Box 91447**
Albuquerque, NM 87119

Report Date: 11/10/17
Date Tested: 11/9/2017
Tested By: Abe Sandoval
Gauge Serial #: 11108
Model #: Troxler 3411
To Be Used For: Waterline Backfill

Field Report #: Z-1111-17

Proctors on file: Lab #	Mark	Max Density (lbs/ft^3)	Optimum Moisture (%)	Type	Material	Location
ABQ LL 245-17	**P1**	**100.1**	**14.2**	**Modified**	**Native Subgrade**	**Sta. 17+65**
ABQ LL 246-17	**P2**	**114.5**	**12.3**	**Modified**	**Native Backfill**	**Sta. 3+00**

Test # D-6938	Location / Elevation of Density Test	Field Density	Field Moisture	% Compaction	Method BS or DT	Depth, inches	Spec	Proctor Used
D-12	Sta. 13+20 / -2' BFG	100.0	13.2	100%	DT	4	95	**P1**
D-13	Sta. 13+21/ -1' BFG	100.0	11.2	100%	DT	4	95	**P1**
D-14	Sta. 13+22/ FG	100.6	13.4	100%	DT	4	95	**P1**

Acronyms
R# - Retest # of Test #
BS - BackScatter
DT - Direct Transmission
TOSG - Top Of SubGrade
CL - CenterLine
BFG - Below Finish Grade
TOBC - Top of Base Course
FG - Finish Grade

Reports to: fax/email
Phillip Johnson pjohnson@rmciinc.com
Eric Hyde ehyde@rmciinc.com

Respectfully Submitted,

Mary Pena, Laboratory Supervisor

Concrete, Aggregate and Asphalt Testing, LLC
414 Bibb Industrial Dr.
P.O.Box 1228
Las Vegas, NM 87701
505-718-3030

Density Test Report

Project: KAFB Conveyance Line ☑ Revised
Client: **RMCI, Inc.**
Address: **PO Box 91447**
Albuquerque, NM 87119

Report Date: 11/27/17
Date Tested: 11/22/2017
Tested By: Daniel Marquez
Gauge Serial #: 9661
Model #: CPN MC 3
To Be Used For: Waterline Backfill

Field Report #: G 1086-17

Proctors on file: Lab #	Mark	Max Density (lbs/ft^3)	Optimum Moisture (%)	Type	Material	Location
ABQ LL 245-17	**P1**	**100.1**	**14.2**	**Modified**	**Native Subgrade**	**Sta. 17+65**
ABQ LL 246-17	**P2**	**114.5**	**12.3**	**Modified**	**Native Backfill**	**Sta. 3+00**

Test # D-6938	Location / Elevation of Density Test	Field Density	Field Moisture	% Compaction	Method BS or DT	Depth, inches	Spec	Proctor Used
D-15	Sta. 18+50 / FG	100.1	9.2	100%	DT	6	85	**P1**
D-16	Sta. 18+50 / -1' BFG	85.3	11.3	85%	DT	5	85	**P1**
D-17	Sta. 18+50 / -2' BFG	84.8	11.9	85%	DT	5	85	**P1**
D-18	Sta. 20+75 / FG	96.0	13.3	96%	DT	6	85	**P1**
D-19	Sta. 20+75 / -1' BFG	88.5	18.6	88%	DT	6	85	**P1**
D-20	Sta. 20+75 / -2' BFG	91.5	18.0	91%	DT	6	85	**P1**
D-21	Sta. 20+75 / -3' BFG	85.2	18.5	85%	DT	6	85	**P1**
D-22	Sta. 23+50 / -3' BFG	97.3	13.4	97%	DT	5	85	**P1**
D-23	Sta. 23+50 / -2' BFG	92.6	16.8	93%	DT	5	85	**P1**
D-24	Sta. 23+50 / -1' BFG	92.7	17.2	93%	DT	5	85	**P1**

Acronyms
R# - Retest # of Test #
BS - BackScatter
DT - Direct Transmission
TOSG - Top Of SubGrade
CL - CenterLine
BFG - Below Finish Grade
TOBC - Top of Base Course
FG - Finish Grade

Reports to: fax/email
Phillip Johnson pjohnson@rmciinc.com
Eric Hyde ehyde@rmciinc.com

Respectfully Submitted,

Abe Sandoval

Abe Sandoval, Manager of Technical Services

Concrete, Aggregate and Asphalt Testing, LLC
414 Bibb Industrial Dr.
P.O.Box 1228
Las Vegas, NM 87701
505-718-3030

Density Test Report

Project: KAFB Conveyance Line ☑ Revised
Client: **RMCI, Inc.**
Address: **PO Box 91447**
Albuquerque, NM 87119

Report Date: 11/29/17
Date Tested: 11/28/2017
Tested By: Daniel Marquez
Gauge Serial #: 9661
Model #: CPN MC 3
To Be Used For: Vault Pad Subgrade

Field Report #: G 1088-17

Proctors on file: Lab #	Mark	Max Density (lbs/ft^3)	Optimum Moisture (%)	Type	Material	Location
ABQ LL 245-17	**P1**	**100.1**	**14.2**	**Modified**	**Native Subgrade**	**Sta. 17+65**
ABQ LL 246-17	**P2**	**114.5**	**12.3**	**Modified**	**Native Backfill**	**Sta. 3+00**

Test #	Location / Elevation of Density Test	Field Density	Field Moisture	% Compaction	Method BS or DT	Depth, inches	Proctor Spec	Proctor Used
D-6938								
D-25	Junction Vault @ Sta. 26+35 (Vault Subgrade)	96.3	15.5	96%	DT	6	95	**P1**

Acronyms
R# - Retest # of Test #
BS - BackScatter
DT - Direct Transmission
TOSG - Top Of SubGrade
CL - CenterLine
BFG - Below Finish Grade
TOBC - Top of Base Course
FG - Finish Grade

Reports to: fax/email
Phillip Johnson pjohnson@rmciinc.com
Eric Hyde ehyde@rmciinc.com

Respectfully Submitted,

Abe Sandoval

Abe Sandoval, Manager of Technical Services

Concrete, Aggregate and Asphalt Testing, LLC
414 Bibb Industrial Dr.
P.O.Box 1228
Las Vegas, NM 87701
505-718-3030

Pneumatic Pressure Testing Form

Project: KAFB-106239 Conveyance Line
EA Project No: 62599DM01
Air Temperature: 50°F
Length of Pipe Tested: 2500 feet
Type of Pipe Tested: Dual Wall HDPE
Location of Pipe Tested: Ridgecrest Dr

Date: 11-30-17
Time: 0725
Installer: RMCI
Space in Pipe Tested: Containment Pipe

Pneumatic pressure testing is recommended at 5 psi and shall not exceed 10 psi per the manufacturer's instructions (Asahi America Inc.). The inner carrier shall be full of water and under pressure to avoid any possible collapse. When testing with air, the ambient temperature should be above 32°F and extra safety precautions for personnel shall be put in place during the test. The design pressure must be maintained for 10 minutes without additional energy expenditure per the manufacturer's instructions.

Testing Procedure

The test pressure shall be incrementally increased until the gage pressure reaches 50 percent of the test pressure (2.5 psig). Examine piping joints for leakage. If no leakage is occurring, continue to increase the pressure incrementally, while maintaining each incremental increase long enough to equalize pipe strains, until the test pressure is reached. The test pressure shall then be reduced to the design pressure and maintained for 10 minutes without additional energy expenditure (this step can be skipped if the test pressure is equal to the design pressure).

Testing Results

Test pressure reading: 5.0 psi
Design pressure reading: 5.0 psi
Pressure reading after 10 minutes: 5.0 psi

Are there any leaks present or is retesting required? No leaks detected

Testing comments:

Signatures:

Testing (Pass/Fail): Pass

Accepted by Installer — Date: 11-NOV-17

Accepted by Construction Quality Inspector — Date: 11-30-17

Reviewed by Construction Quality Manager — Date: 12/04/17

Hydrostatic Pressure Testing Form

Project: KAFB-106239 Conveyance Line
EA Project No: 62599DM01
Air Temperature: 60°F
Length of Pipe Tested: 2500 feet
Type of Pipe Tested: Dual Wall HDPE
Location of Pipe Tested: Ridgecrest Dr.

Date: 12-1-17
Time: 10
Installer: RMCI
Space in Pipe Tested: carrier pipe

Hydrostatic pressure testing is recommended at 150% of operating pressure per ASME B31.3 part 345. Per the manufacturer's instructions (Asahi America Inc.), the test will be accepted when the pressure reading at the end of the test period has not deviated by 10% of the initial reading from the initial reading.

Testing Procedure

Piping shall be subjected for 1 hour to a hydrostatic test pressure of 175 psig. Each valve shall be opened and closed several times during the test (if present). Exposed pipe, joints, fittings, and valves shall be carefully examined.

Testing Results

Initial pressure reading: 175 psi
Pressure reading after one hour: 166 psi

Are there any leaks present or is retesting required? No leaks present

Testing comments: Contacted USACE to notify them of testing results

Signatures:

Testing (Pass/Fail): Pass

Accepted by Installer — Date: 12-1-17

Accepted by Construction Quality Inspector — Date: 12-1-17

Reviewed by Construction Quality Manager — Date: 12/04/17

Tightness Testing Form

Project: KAFB-106239 Conveyance Line
EA Project No: 62599DM01
Installer: RMCI

Date: 12-7-17
Time: 10:00 – 4:00

The following tests should be performed on each length of cable after both connectors are installed.

Testing Procedure

See PAL-AT Installation Manual. All testing is performed per the manufacturer's instructions (Perma-Pipe, Inc.) as needed.

Testing Results

Length of Line Tested	Continuity Test Result	Alternative System Test Result	Insulation Test Result	Simulation Test Result	Notes
Sta 1+00 to Sta 10+50	5.6 ohms	NA	No shorts detected	Leak detected (Sta 10+50)	
Sta 10+50 to Sta 19+90	5.5 ohms	NA	No shorts detected	Leak detected (~~19+9~~ Sta 19+90)	
Sta 19+90 to Sta 21+70	1.3 ohms	NA	No shorts detected	Leak detected (Sta 21+70)	
Sta 21+70 to Sta 26+35	2.9 ohms	NA	No shorts detected	NA	

Signatures:

Testing (Pass/Fail): Pass

Accepted by Installer — Date: 12-7-17

Accepted by Construction Quality Inspector — Date: 12-7-17

Reviewed by Construction Quality Manager — Date: 12-11-17

ELECTRIC POWER SYSTEMS
TESTING & ENGINEERING SERVICES

8515-A Calle Alameda • Albuquerque, NM 87113 •
Phone (505) 792.7761 • Fax (505) 792.6001

ACCEPTANCE TESTING
FINAL REPORT
REVISION 0

OF
KAFB 106239 CONVEYANCE LINE
KAFB, NM 87110

FOR

WILSON ELECTRIC SERVICES CORP.
501 GENERAL SOMERVELL ST SE SUITE B
ALBUQUERQUE, NM 87123

EPS JOB NUMBER
ABQ17117

REPORT PREPARED BY:
DERRICK DURAN
01/10/2018

TABLE OF CONTENTS

PROJECT DETAILS	PAGE 3
PROJECT PURPOSE	PAGE 4
PROJECT SUMMARY	PAGE 4
EQUIPMENT INSPECTED AND TESTED	PAGE 4
INSPECTION AND TEST PROCEDURES	PAGE 4
RESULTS AND RECOMMENDATIONS	PAGE 4
FIELD TEST REPORT	PAGE 5

PROJECT DETAILS

SITE

KAFB 106239 CONVEYANCE LINE
KAFB, NM 87110

CLIENT

WILSON ELECTRIC SERVICES CORP.
501 GENERAL SOMERVELL ST SE SUITE B
ALBUQUERQUE, NM 87123

PROJECT NAME
KAFB 106239 Conveyance Line MV Cable Testing

EPS JOB NUMBER
ABQ17117

EPS LEAD ENGINEER
Derrick Duran

PROJECT START DATE
01/10/2018

PROJECT END DATE
01/10/2018

CLIENT PROJECT MANAGER
Mathew Walstrom

CLIENT PROJECT MANAGER PHONE NUMBER
505-410-7604

CLIENT SITE CONTACT
Britt Cooks

CLIENT SITE CONTACT PHONE
505-604-0610

PROPOSAL REFERENCE NUMBER
ABQ17Q193

1.0 PURPOSE

1.1 The equipment and components listed in Section 3.0 of this report was inspected and tested to help assure their proper and safe operation. Defective or marginal equipment can be identified, repaired, replaced or scheduled for future repairs without costly or unexpected interruptions during normal operating periods.

1.2 The test results are particularly valuable when kept for comparison with past and future maintenance test results. This history enables one to predict the probability of equipment failure and thus schedule facility production and financial budgets to accommodate preventative maintenance or repair rather than breakdown maintenance.

2.0 SUMMARY

2.1 This contract was initiated at the request of Mathew Walstrom of Wilson Electric Services Corp. All work was performed on site at the Transformer T04223B in the VA Parking Lot off of San Pedro and Ridgecrest near Kirtland AFB, NM by Derrick Duran of Electric Power Systems.

3.0 EQUIPMENT TESTED AND INSPECTED

3.1 One (1) Run Medium Voltage Cable
- **3.1.1** VLF AC Hi-Pot Test
- **3.1.2** Insulation Resistance Test
- **3.1.3** Shield Continuity Test

4.0 INSPECTION AND TEST PROCEDURES

4.1 The Test Procedures used are in accordance with the InterNational Electrical Testing Association (NETA) Acceptance Testing Specifications 2017.

5.0 RESULTS AND RECOMMENDATIONS

5.1 Our test procedures have found the equipment tested in Section 3.0 to be satisfactory to be placed into service.

ELECTRIC POWER SYSTEMS

Test Sheet: 01

15 kV CABLE VLF TEST REPORT

CUSTOMER DATA		
CLIENT:	**SITE LOCATION:**	**JOB NUMBER**:
Wilson Electric Service Corps.	Kirtland AFB 106239 Conveyance Line	ABQ17117
EQUIPMENT LOCATION:	**CIRCUIT DESIGNATION:**	**DATE:**
Kirtland AFB	Z08223B to T04223B	01/10/18
TEST EQUIPMENT (NAME/ SERIAL NUMBER/ CALIBRATION DATE)		**TESTED BY:**
HV VLF-6022CM, S/N: 952, Cal: 12/14/2017, Megger S1552/2, S/N 151813, Cal Date: 12/14/2017		DKD

EQUIPMENT DATA

CABLE DESIGNATION:	LINE SIDE TERMINATION LOCATION:	LINE SIDE TERMINATION TYPE:	LOAD SIDE TERMINATION LOCATION:	LOAD SIDE TERMINATION TYPE:
Z08223B to T04223B	Z08223B	Load Break Elbow	T04223B	Load Break Elbow
CABLE MFR	**CABLE LENGTH**:	**CABLE SIZE**	**INSULATION TYPE**	**INSULATION SIZE**
OKONITE	3000 ft	2 AWG	220 MILS	133%

RATED VOLTAGE	SYSTEM VOLTAGE	YEARS INSTALLED	NUMBER OF JUNCTIONS/SPLICES	TEMP.	HUMIDITY:
15 kV	12.47 kV	New	2	42 °F	78%

TEST VOLTAGE INCREMENTS:	TEST VOLTAGE FREQUENCY	TEST TYPE:	STEP HOLD TIME:	TEST VOLTAGE:	MAX. HOLD TIME:
5	0.1 Hz	Acceptance	1 min	28 kV Peak / (20 kV RMS)	30 min

VISUAL AND MECHANICAL INSPECTION *(A-ACCEPTABLE, R-REQUIRES REPAIR, C-CORRECTED, NA-NOT APPLICABLE, NP-NOT PERFORMED)

CHECK POINT	*COND	NOTES	CHECK POINT	*COND	NOTES
COMPARE CABLE DATA TO DRAWINGS		(1)	CHECK FOR PHYSICAL DAMAGE	A	
TIGHTNESS OF CABLE CONNECTION	A		COMPRESSION CONNECTORS CORRECTLY INSTALLED	N/A	
SHIELD GROUNDING	A		CABLE SUPPORT AND TERMINATION	A	
ACCEPTABLE BENDING RADIUS	A		FIREPROOFING	A	
NEUTRALS, GROUNDS, AND SHIELDS PROPERLY PLACED FOR CABLES THOUGH WINDOW CURRENT TRANSFORMERS.	N/A		CORRECT IDENTIFICATION	A	
INSULATION AND JACKET CONDITION	A		PROPER ARRANGEMENT OF CABLES	A	

ELECTRICAL TESTS

TEST VOLTAGE (KV) RMS	TIME	LEAKAGE CURRENT (in mA)			CAPACITANCE (in nF)		
		PHASE A	PHASE B	PHASE C	PHASE A	PHASE B	PHASE C
STEP 1 / 4 - KV	1 MIN	1.22	1.22	1.22	485	485	485
STEP 2 / 8 - KV	1 MIN	2.44	2.44	2.44	486	486	486
STEP 3 / 12 - KV	1 MIN	3.66	3.66	3.66	486	486	486
STEP 4 / 16 - KV	1 MIN	4.88	4.88	4.88	486	486	486
STEP 5 / 20 - KV	1 MIN	6.10	6.10	6.10	486	486	486
20 –KV (rms)	3 MIN	6.10	6.10	6.10	486	486	486
20 –KV (rms)	6 MIN	6.10	6.10	6.10	486	486	486
20 –KV (rms)	9 MIN	6.10	6.10	6.10	486	486	486
20 –KV (rms)	12 MIN	6.10	6.10	6.10	486	486	486
20 –KV (rms)	15 MIN	6.10	6.10	6.10	486	486	486
20 –KV (rms)	18 MIN	6.10	6.10	6.10	486	486	486
20 –KV (rms)	21 MIN	6.10	6.10	6.10	486	486	486
20 –KV (rms)	24 MIN	6.10	6.10	6.10	486	486	486
20 –KV (rms)	27 MIN	6.10	6.10	6.10	486	486	486
20 –KV (rms)	30 MIN	6.10	6.10	6.10	486	486	486
Insulation Resistance @ 5 kV	**In GΩ**	25.6	27.1	24.8			
Shield Continuity	**In Ω**	1.67	1.62	1.60			

NOTES: (1) No drawings provided

Cable ID	Summary	Test Limit	Length	Headroom	Date / Time
AQUA STRAND-12	PASS	ANSI/TIA-568.3-D	3196 ft	N/A	01/19/2018 10:31 AM
AQUA STRAND-24	PASS	ANSI/TIA-568.3-D	3199 ft	N/A	01/19/2018 11:16 AM
BLACK STRAND-8	PASS	ANSI/TIA-568.3-D	3199 ft	N/A	01/19/2018 10:15 AM
BLACK STRAND-20	PASS	ANSI/TIA-568.3-D	3198 ft	N/A	01/19/2018 11:07 AM
BLUE STRAND-1	PASS	ANSI/TIA-568.3-D	3199 ft	N/A	01/19/2018 10:04 AM
BLUE STRAND-13	PASS	ANSI/TIA-568.3-D	3200 ft	N/A	01/19/2018 10:52 AM
BROWN STRAND-4	PASS	ANSI/TIA-568.3-D	3198 ft	N/A	01/19/2018 10:07 AM
BROWN STRAND-16	PASS	ANSI/TIA-568.3-D	3199 ft	N/A	01/19/2018 10:58 AM
GREEN STRAND-3	PASS	ANSI/TIA-568.3-D	3198 ft	N/A	01/19/2018 10:06 AM
GREEN STRAND-15	PASS	ANSI/TIA-568.3-D	3198 ft	N/A	01/19/2018 10:56 AM
ORANGE STRAND-2	PASS	ANSI/TIA-568.3-D	3199 ft	N/A	01/19/2018 10:03 AM
ORANGE STRAND-14	PASS	ANSI/TIA-568.3-D	3198 ft	N/A	01/19/2018 10:55 AM
RED STRAND-7	PASS	ANSI/TIA-568.3-D	3200 ft	N/A	01/19/2018 09:58 AM
RED STRAND-19	PASS	ANSI/TIA-568.3-D	3198 ft	N/A	01/19/2018 11:03 AM
ROSE STRAND-11	PASS	ANSI/TIA-568.3-D	3198 ft	N/A	01/19/2018 10:29 AM
ROSE STRAND-23	PASS	ANSI/TIA-568.3-D	3198 ft	N/A	01/19/2018 11:15 AM
SLATE STRAND-5	PASS	ANSI/TIA-568.3-D	3198 ft	N/A	01/19/2018 10:10 AM
SLATE STRAND-17	PASS	ANSI/TIA-568.3-D	3198 ft	N/A	01/19/2018 11:00 AM
STRAND-1	PASS	TIA-568.3-D OSP (OS2)	3183 ft	0.24 dB (Loss Margin)	01/19/2018 09:14 AM
STRAND-2	PASS	TIA-568.3-D OSP (OS2)	3183 ft	0.42 dB (Loss Margin)	01/19/2018 09:14 AM
STRAND-3	PASS	TIA-568.3-D OSP (OS2)	3179 ft	1.21 dB (Loss Margin)	01/19/2018 09:24 AM
STRAND-4	PASS	TIA-568.3-D OSP (OS2)	3179 ft	0.63 dB (Loss Margin)	01/19/2018 09:24 AM
STRAND-5	PASS	TIA-568.3-D OSP (OS2)	3179 ft	1.23 dB (Loss Margin)	01/19/2018 09:27 AM
STRAND-6	PASS	TIA-568.3-D OSP (OS2)	3179 ft	0.69 dB (Loss Margin)	01/19/2018 09:27 AM
STRAND-7	PASS	TIA-568.3-D OSP (OS2)	3179 ft	0.60 dB (Loss Margin)	01/19/2018 09:30 AM
STRAND-8	PASS	TIA-568.3-D OSP (OS2)	3179 ft	0.60 dB (Loss Margin)	01/19/2018 09:30 AM
STRAND-9	PASS	TIA-568.3-D OSP (OS2)	3179 ft	0.71 dB (Loss Margin)	01/19/2018 09:47 AM
STRAND-10	PASS	TIA-568.3-D OSP (OS2)	3179 ft	0.85 dB (Loss Margin)	01/19/2018 09:47 AM
STRAND-11	PASS	TIA-568.3-D OSP (OS2)	3179 ft	1.25 dB (Loss Margin)	01/19/2018 09:12 AM
STRAND-12	PASS	TIA-568.3-D OSP (OS2)	3179 ft	0.04 dB (Loss Margin)	01/19/2018 09:12 AM
TEST-1	PASS	ANSI/TIA-568.3-D	2077 ft	N/A	01/18/2018 09:49 AM
VIOLET STRAND-10	PASS	ANSI/TIA-568.3-D	3198 ft	N/A	01/19/2018 10:28 AM
VIOLET STRAND-22	PASS	ANSI/TIA-568.3-D	3197 ft	N/A	01/19/2018 11:13 AM
WHITE STRAND-6	PASS	ANSI/TIA-568.3-D	3198 ft	N/A	01/19/2018 10:12 AM
WHITE STRAND-18	PASS	ANSI/TIA-568.3-D	3198 ft	N/A	01/19/2018 11:01 AM
YELLOW STRAND-9	PASS	ANSI/TIA-568.3-D	3198 ft	N/A	01/19/2018 10:17 AM
YELLOW STRAND-21	PASS	ANSI/TIA-568.3-D	3198 ft	N/A	01/19/2018 11:08 AM

Total Length:	116991 ft
Number of Reports:	37
Number of Passing Reports:	37
Number of Failing Reports:	0
Number of Warning Reports:	0
Documentation Only:	0

LINKWARE™ PC
CABLE TEST MANAGEMENT SOFTWARE

Cable ID: AQUA STRAND-12

Date / Time: 01/19/2018 10:31:05 AM
Cable Type: OS2 Singlemode
End1 Name: NEW WATER WELL

n = 1.4660 (1310 nm)
n = 1.4670 (1550 nm)
End2 Name: WATER TREATMENT BUILDING

Test Summary: PASS

Backscatter Coefficient: -80.0dB (1310 nm)
Backscatter Coefficient: -82.5dB (1550 nm)

OTDR End1 PASS

Test Limit: ANSI/TIA-568.3-D
Limits Version: 1.9500
Date / Time: 01/19/2018 10:31:05 AM
Operator: STEVEN
Tester: DTX-1800 (9421005 2.7800)
Module: DTX-OTDR-QMOD (1666506)
Calibration Date: 11/20/2017

Launch Only
Launch Type: Singlemode
Launch Length : 530.8 ft

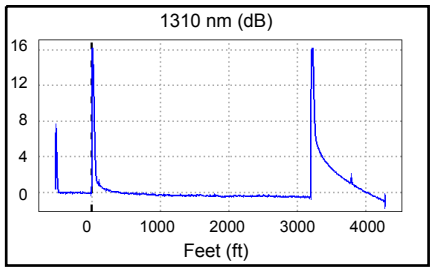

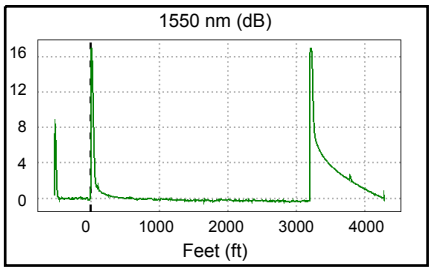

Overall Results	1310 nm	1550 nm	Limit
Overall Length (ft)	3196.1		13123
Overall Loss (dB)	0.44	0.32	
ORL (dB)	N/A	N/A	
Attn Coeff (dB/km)	0.48	0.31	

Settings (Auto OTDR)	1310 nm	1550 nm
Auto OTDR		
Range (Auto)	4946 ft	4949 ft
Resolution (Auto)	0.8 ft	0.8 ft
Pulse Width (Auto)	20 ns	20 ns
Averaging Time (Auto)	9 s	15 s
Loss Threshold (Auto)	0.15 dB	0.15 dB

	Loss (dB)			Reflectance (dB)			Attn Coeff (dB/km)		
Events	1310 nm	1550 nm	Limit	1310 nm	1550 nm	Limit	1310 nm	1550 nm	Limit
3196.1 ft End	N/A	N/A		> -22.20	> -23.13		0.48	0.31	
607.6 ft Loss		0.17	0.30		N/A			N/A	
0.0 ft Launch Event	-0.02	-0.09	0.75	> -25.32	> -28.75		N/A	N/A	
-530.8 ft OTDR Port	N/A	N/A		-47.65	-48.60		N/A	N/A	

LINKWARE™PC
CABLE TEST MANAGEMENT SOFTWARE

Cable ID: AQUA STRAND-24

Date / Time: 01/19/2018 11:16:14 AM
Cable Type: OS2 Singlemode
End1 Name: NEW WATER WELL

n = 1.4660 (1310 nm)
n = 1.4670 (1550 nm)
End2 Name: WATER TREATMENT BUILDING

Test Summary: PASS

Backscatter Coefficient: -80.0dB (1310 nm)
Backscatter Coefficient: -82.5dB (1550 nm)

OTDR End2 PASS

Test Limit: ANSI/TIA-568.3-D
Limits Version: 1.9500
Date / Time: 01/19/2018 11:16:14 AM
Operator: STEVEN
Tester: DTX-1800 (9421005 2.7800)
Module: DTX-OTDR-QMOD (1666506)
Calibration Date: 11/20/2017

Launch Only
Launch Type: Singlemode
Launch Length : 530.0 ft

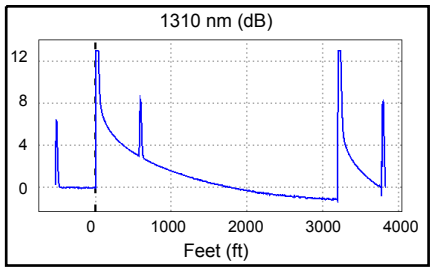

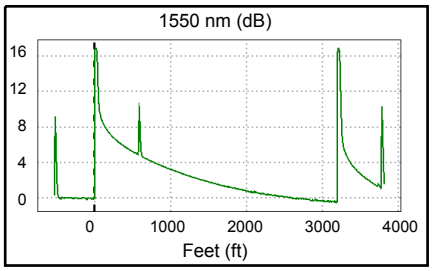

Overall Results	1310 nm	1550 nm	Limit
Overall Length (ft)	3199.2		13123
Overall Loss (dB)	1.12	0.38	
ORL (dB)	N/A	N/A	
Attn Coeff (dB/km)	1.70	N/A	

Settings (Auto OTDR)	1310 nm	1550 nm
Auto OTDR		
Range (Auto)	4491 ft	4485 ft
Resolution (Auto)	0.2 ft	1.7 ft
Pulse Width (Auto)	40 ns	20 ns
Averaging Time (Auto)	5 s	12 s
Loss Threshold (Auto)	0.15 dB	0.15 dB

Events	Loss (dB) 1310 nm	Loss (dB) 1550 nm	Loss (dB) Limit	Reflectance (dB) 1310 nm	Reflectance (dB) 1550 nm	Reflectance (dB) Limit	Attn Coeff (dB/km) 1310 nm	Attn Coeff (dB/km) 1550 nm	Attn Coeff (dB/km) Limit
3199.2 ft End	N/A	N/A		> -25.81	> -23.14		1.70	N/A	
578.7 ft Ghost	N/A	N/A		-44.63	-45.32		N/A	N/A	
0.0 ft Launch Event	-0.24	-1.76	0.75	> -28.68	> -27.25		N/A	N/A	
-530.0 ft OTDR Port	N/A	N/A		-46.46	-48.67		N/A	N/A	

-WARNING: Negative Loss value found in test result.

LINKWARE™ PC
CABLE TEST MANAGEMENT SOFTWARE

Cable ID: BLACK STRAND-8

Date / Time: 01/19/2018 10:15:05 AM
Cable Type: OS2 Singlemode
End1 Name: NEW WATER WELL

n = 1.4660 (1310 nm)
n = 1.4670 (1550 nm)
End2 Name: WATER TREATMENT BUILDING

Test Summary: PASS

Backscatter Coefficient: -80.0dB (1310 nm)
Backscatter Coefficient: -82.5dB (1550 nm)

OTDR End1 PASS

Test Limit: ANSI/TIA-568.3-D
Limits Version: 1.9500
Date / Time: 01/19/2018 10:15:05 AM
Operator: STEVEN
Tester: DTX-1800 (9421005 2.7800)
Module: DTX-OTDR-QMOD (1666506)
Calibration Date: 11/20/2017

Launch Only
Launch Type: Singlemode
Launch Length : 530.7 ft

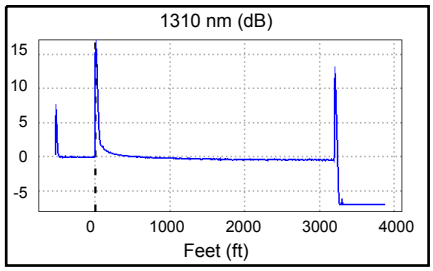

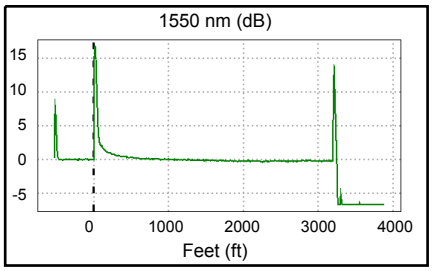

Overall Results	1310 nm	1550 nm	Limit
Overall Length (ft)	3199.5		13123
Overall Loss (dB)	0.45	0.32	
ORL (dB)	N/A	N/A	
Attn Coeff (dB/km)	0.43	0.53	

Settings (Auto OTDR)	1310 nm	1550 nm
Auto OTDR		
Range (Auto)	4547 ft	4550 ft
Resolution (Auto)	0.8 ft	0.4 ft
Pulse Width (Auto)	20 ns	20 ns
Averaging Time (Auto)	6 s	16 s
Loss Threshold (Auto)	0.15 dB	0.15 dB

	Loss (dB)			Reflectance (dB)			Attn Coeff (dB/km)		
Events	1310 nm	1550 nm	Limit	1310 nm	1550 nm	Limit	1310 nm	1550 nm	Limit
3199.5 ft End	N/A	N/A		-36.50	-36.21		0.43	0.53	
0.0 ft Launch Event	0.02	-0.20	0.75	> -25.02	> -28.53		N/A	N/A	
-530.7 ft OTDR Port	N/A	N/A		-48.12	-49.06		N/A	N/A	

LINKWARE™ PC
CABLE TEST MANAGEMENT SOFTWARE

Cable ID: BLACK STRAND-20

Date / Time: 01/19/2018 11:07:00 AM
Cable Type: OS2 Singlemode
End1 Name: NEW WATER WELL

n = 1.4660 (1310 nm)
n = 1.4670 (1550 nm)
End2 Name: WATER TREATMENT BUILDING

Test Summary: PASS

Backscatter Coefficient: -80.0dB (1310 nm)
Backscatter Coefficient: -82.5dB (1550 nm)

OTDR End2 PASS

Test Limit: ANSI/TIA-568.3-D
Limits Version: 1.9500
Date / Time: 01/19/2018 11:07:00 AM
Operator: STEVEN
Tester: DTX-1800 (9421005 2.7800)
Module: DTX-OTDR-QMOD (1666506)
Calibration Date: 11/20/2017

Launch Only
Launch Type: Singlemode
Launch Length : 530.8 ft

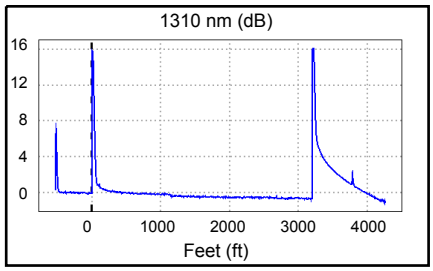

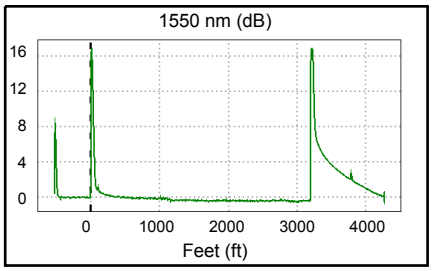

Overall Results	1310 nm	1550 nm	Limit
Overall Length (ft)	3198.6		13123
Overall Loss (dB)	0.64	0.39	
ORL (dB)	N/A	N/A	
Attn Coeff (dB/km)	0.53	0.30	

Settings (Auto OTDR)	1310 nm	1550 nm
Auto OTDR		
Range (Auto)	4933 ft	4935 ft
Resolution (Auto)	1.7 ft	0.8 ft
Pulse Width (Auto)	20 ns	20 ns
Averaging Time (Auto)	6 s	16 s
Loss Threshold (Auto)	0.15 dB	0.15 dB

	Loss (dB)			Reflectance (dB)			Attn Coeff (dB/km)		
Events	1310 nm	1550 nm	Limit	1310 nm	1550 nm	Limit	1310 nm	1550 nm	Limit
3198.6 ft End	N/A	N/A		> -21.86	> -23.03		0.46	0.12	
1135.6 ft Loss	0.18	0.18	0.30	N/A	N/A		0.65	0.63	
0.0 ft Launch Event	-0.06	-0.09	0.75	> -25.71	> -29.07		N/A	N/A	
-530.8 ft OTDR Port	N/A	N/A		-47.68	-48.55		N/A	N/A	

LINKWARE™ PC
CABLE TEST MANAGEMENT SOFTWARE

Cable ID: BLUE STRAND-1

Date / Time: 01/19/2018 10:04:55 AM
Cable Type: OS2 Singlemode
End1 Name: NEW WATER WELL

n = 1.4660 (1310 nm)
n = 1.4670 (1550 nm)
End2 Name: WATER TREATMENT BUILDING

Test Summary: PASS

Backscatter Coefficient: -80.0dB (1310 nm)
Backscatter Coefficient: -82.5dB (1550 nm)

OTDR End1 PASS

Test Limit: ANSI/TIA-568.3-D
Limits Version: 1.9500
Date / Time: 01/19/2018 10:04:56 AM
Operator: STEVEN
Tester: DTX-1800 (9421005 2.7800)
Module: DTX-OTDR-QMOD (1666506)
Calibration Date: 11/20/2017

Launch Only
Launch Type: Singlemode
Launch Length : 530.8 ft

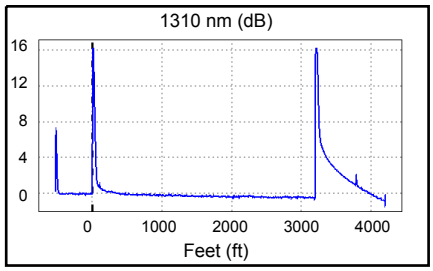

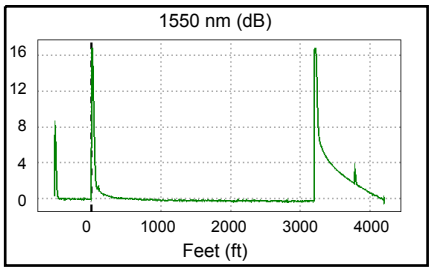

Overall Results	1310 nm	1550 nm	Limit
Overall Length (ft)	3199.5		13123
Overall Loss (dB)	0.43	0.27	
ORL (dB)	N/A	N/A	
Attn Coeff (dB/km)	0.46	0.29	

Settings (Auto OTDR)	1310 nm	1550 nm
Auto OTDR		
Range (Auto)	4846 ft	4875 ft
Resolution (Auto)	0.8 ft	0.8 ft
Pulse Width (Auto)	20 ns	20 ns
Averaging Time (Auto)	8 s	14 s
Loss Threshold (Auto)	0.15 dB	0.15 dB

	Loss (dB)			Reflectance (dB)			Attn Coeff (dB/km)		
Events	1310 nm	1550 nm	Limit	1310 nm	1550 nm	Limit	1310 nm	1550 nm	Limit
3199.5 ft End	N/A	N/A		> -22.28	> -23.51		0.46	0.29	
0.0 ft Launch Event	-0.01	-0.01	0.75	> -25.60	> -29.11		N/A	N/A	
-530.8 ft OTDR Port	N/A	N/A		-48.01	-49.02		N/A	N/A	

LINKWARE™ PC
CABLE TEST MANAGEMENT SOFTWARE

Cable ID: BLUE STRAND-13

Date / Time: 01/19/2018 10:52:50 AM
Cable Type: OS2 Singlemode
End1 Name: NEW WATER WELL

n = 1.4660 (1310 nm)
n = 1.4670 (1550 nm)
End2 Name: WATER TREATMENT BUILDING

Test Summary: PASS

Backscatter Coefficient: -80.0dB (1310 nm)
Backscatter Coefficient: -82.5dB (1550 nm)

OTDR End2 PASS

Test Limit: ANSI/TIA-568.3-D
Limits Version: 1.9500
Date / Time: 01/19/2018 10:52:50 AM
Operator: STEVEN
Tester: DTX-1800 (9421005 2.7800)
Module: DTX-OTDR-QMOD (1666506)
Calibration Date: 11/20/2017

Launch Only
Launch Type: Singlemode
Launch Length : 530.8 ft

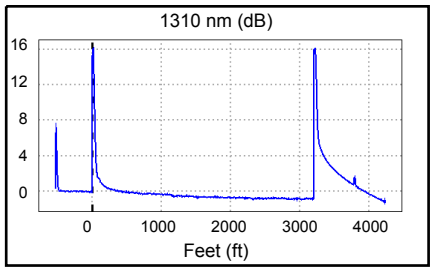

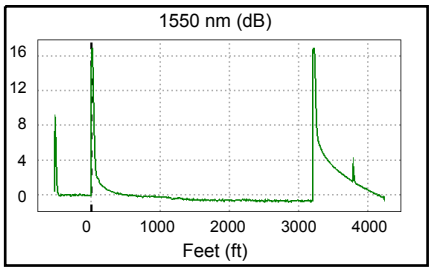

Overall Results	1310 nm	1550 nm	Limit
Overall Length (ft)	3200.3		13123
Overall Loss (dB)	0.87	0.70	
ORL (dB)	N/A	N/A	
Attn Coeff (dB/km)	0.69	0.70	

Settings (Auto OTDR)	1310 nm	1550 nm
Auto OTDR		
Range (Auto)	4889 ft	4904 ft
Resolution (Auto)	1.7 ft	1.7 ft
Pulse Width (Auto)	20 ns	20 ns
Averaging Time (Auto)	7 s	10 s
Loss Threshold (Auto)	0.15 dB	0.15 dB

	Loss (dB)			Reflectance (dB)			Attn Coeff (dB/km)		
Events	1310 nm	1550 nm	Limit	1310 nm	1550 nm	Limit	1310 nm	1550 nm	Limit
3200.3 ft End	N/A	N/A		> -21.53	> -22.50		0.52	0.37	
1141.5 ft Loss	0.18	0.19	0.30	N/A	N/A		0.98	1.29	
0.0 ft Launch Event	0.01	-0.16	0.75	> -25.05	> -28.29		N/A	N/A	
-530.8 ft OTDR Port	N/A	N/A		-47.70	-48.72		N/A	N/A	

LINKWARE™ PC
CABLE TEST MANAGEMENT SOFTWARE

Cable ID: BROWN STRAND-4

Date / Time: 01/19/2018 10:07:40 AM
Cable Type: OS2 Singlemode
End1 Name: NEW WATER WELL

n = 1.4660 (1310 nm)
n = 1.4670 (1550 nm)
End2 Name: WATER TREATMENT BUILDING

Test Summary: PASS

Backscatter Coefficient: -80.0dB (1310 nm)
Backscatter Coefficient: -82.5dB (1550 nm)

OTDR End1 PASS

Test Limit: ANSI/TIA-568.3-D
Limits Version: 1.9500
Date / Time: 01/19/2018 10:07:40 AM
Operator: STEVEN
Tester: DTX-1800 (9421005 2.7800)
Module: DTX-OTDR-QMOD (1666506)
Calibration Date: 11/20/2017

Launch Only
Launch Type: Singlemode
Launch Length : 530.8 ft

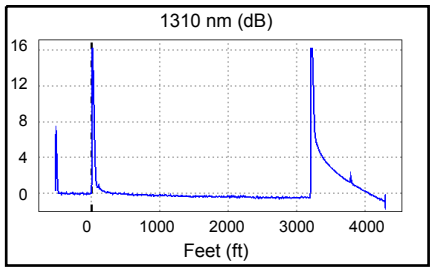

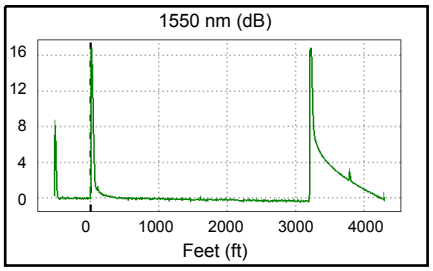

Overall Results	1310 nm	1550 nm	Limit
Overall Length (ft)	3198.6		13123
Overall Loss (dB)	0.52	0.32	
ORL (dB)	N/A	N/A	
Attn Coeff (dB/km)	0.52	0.39	

Settings (Auto OTDR)	1310 nm	1550 nm
Auto OTDR		
Range (Auto)	4875 ft	4960 ft
Resolution (Auto)	0.8 ft	0.8 ft
Pulse Width (Auto)	20 ns	20 ns
Averaging Time (Auto)	9 s	15 s
Loss Threshold (Auto)	0.15 dB	0.15 dB

	Loss (dB)			Reflectance (dB)			Attn Coeff (dB/km)		
Events	1310 nm	1550 nm	Limit	1310 nm	1550 nm	Limit	1310 nm	1550 nm	Limit
3198.6 ft End	N/A	N/A		> -22.02	> -23.37		0.52	0.39	
0.0 ft Launch Event	0.02	-0.07	0.75	> -25.58	> -29.13		N/A	N/A	
-530.8 ft OTDR Port	N/A	N/A		-47.93	-48.99		N/A	N/A	

LINKWARE™PC
CABLE TEST MANAGEMENT SOFTWARE

Cable ID: BROWN STRAND-16

Date / Time: 01/19/2018 10:58:31 AM
Cable Type: OS2 Singlemode
End1 Name: NEW WATER WELL

n = 1.4660 (1310 nm)
n = 1.4670 (1550 nm)
End2 Name: WATER TREATMENT BUILDING

Test Summary: PASS

Backscatter Coefficient: -80.0dB (1310 nm)
Backscatter Coefficient: -82.5dB (1550 nm)

OTDR End2 PASS

Test Limit: ANSI/TIA-568.3-D
Limits Version: 1.9500
Date / Time: 01/19/2018 10:58:31 AM
Operator: STEVEN
Tester: DTX-1800 (9421005 2.7800)
Module: DTX-OTDR-QMOD (1666506)
Calibration Date: 11/20/2017

Launch Only
Launch Type: Singlemode
Launch Length : 530.0 ft

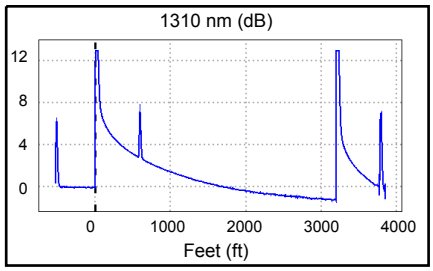

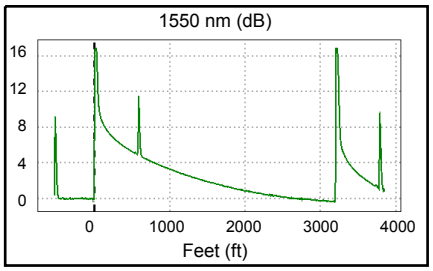

Overall Results	1310 nm	1550 nm	Limit
Overall Length (ft)	3199.2		13123
Overall Loss (dB)	1.15	0.27	
ORL (dB)	N/A	N/A	
Attn Coeff (dB/km)	1.52	N/A	

Settings (Auto OTDR)	1310 nm	1550 nm
Auto OTDR		
Range (Auto)	4520 ft	4513 ft
Resolution (Auto)	0.2 ft	1.7 ft
Pulse Width (Auto)	40 ns	20 ns
Averaging Time (Auto)	6 s	10 s
Loss Threshold (Auto)	0.15 dB	0.15 dB

Events	Loss (dB) 1310 nm	Loss (dB) 1550 nm	Loss (dB) Limit	Reflectance (dB) 1310 nm	Reflectance (dB) 1550 nm	Reflectance (dB) Limit	Attn Coeff (dB/km) 1310 nm	Attn Coeff (dB/km) 1550 nm	Attn Coeff (dB/km) Limit
3199.2 ft End	N/A	N/A		> -25.76	> -23.36		1.52	N/A	
578.9 ft Ghost	N/A	N/A		-47.58	-43.87		N/A	N/A	
0.0 ft Launch Event	-0.06	-1.83	0.75	> -28.72	> -27.25		0.45	N/A	
-530.0 ft OTDR Port	N/A	N/A		-46.52	-48.70		N/A	N/A	

-WARNING: Negative Loss value found in test result.

LINKWARE™ PC
CABLE TEST MANAGEMENT SOFTWARE

Cable ID: GREEN STRAND-3

Date / Time: 01/19/2018 10:06:31 AM
Cable Type: OS2 Singlemode
End1 Name: NEW WATER WELL

n = 1.4660 (1310 nm)
n = 1.4670 (1550 nm)
End2 Name: WATER TREATMENT BUILDING

Test Summary: PASS

Backscatter Coefficient: -80.0dB (1310 nm)
Backscatter Coefficient: -82.5dB (1550 nm)

OTDR End1 PASS

Test Limit: ANSI/TIA-568.3-D
Limits Version: 1.9500
Date / Time: 01/19/2018 10:06:31 AM
Operator: STEVEN
Tester: DTX-1800 (9421005 2.7800)
Module: DTX-OTDR-QMOD (1666506)
Calibration Date: 11/20/2017

Launch Only
Launch Type: Singlemode
Launch Length : 530.8 ft

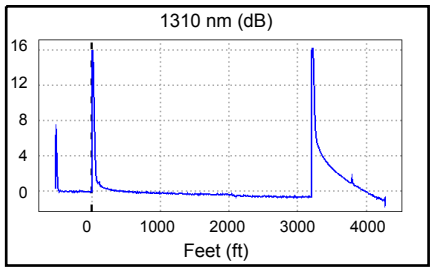

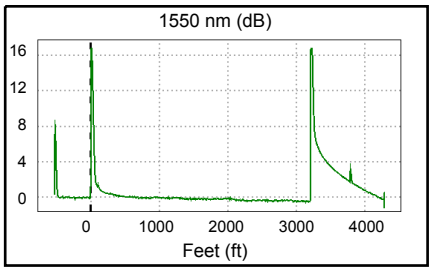

Overall Results	1310 nm	1550 nm	Limit
Overall Length (ft)	3198.6		13123
Overall Loss (dB)	0.62	0.43	
ORL (dB)	N/A	N/A	
Attn Coeff (dB/km)	0.38	0.64	

Settings (Auto OTDR)	1310 nm	1550 nm
Auto OTDR		
Range (Auto)	4876 ft	4946 ft
Resolution (Auto)	1.7 ft	0.8 ft
Pulse Width (Auto)	20 ns	20 ns
Averaging Time (Auto)	5 s	15 s
Loss Threshold (Auto)	0.15 dB	0.15 dB

	Loss (dB)			Reflectance (dB)			Attn Coeff (dB/km)		
Events	1310 nm	1550 nm	Limit	1310 nm	1550 nm	Limit	1310 nm	1550 nm	Limit
3198.6 ft End	N/A	N/A		> -21.86	> -23.19		0.38	0.64	
0.0 ft Launch Event	0.24	-0.19	0.75	> -25.22	> -28.90		N/A	N/A	
-530.8 ft OTDR Port	N/A	N/A		-48.05	-49.01		N/A	N/A	

LINKWARE™PC
CABLE TEST MANAGEMENT SOFTWARE

Cable ID: GREEN STRAND-15

Date / Time: 01/19/2018 10:56:56 AM
Cable Type: OS2 Singlemode
End1 Name: NEW WATER WELL

n = 1.4660 (1310 nm)
n = 1.4670 (1550 nm)
End2 Name: WATER TREATMENT BUILDING

Test Summary: PASS

Backscatter Coefficient: -80.0dB (1310 nm)
Backscatter Coefficient: -82.5dB (1550 nm)

OTDR End2 PASS

Test Limit: ANSI/TIA-568.3-D
Limits Version: 1.9500
Date / Time: 01/19/2018 10:56:56 AM
Operator: STEVEN
Tester: DTX-1800 (9421005 2.7800)
Module: DTX-OTDR-QMOD (1666506)
Calibration Date: 11/20/2017

Launch Only
Launch Type: Singlemode
Launch Length : 530.7 ft

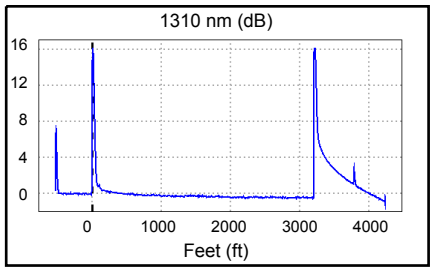

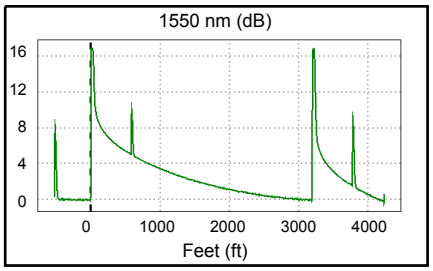

Overall Results	1310 nm	1550 nm	Limit
Overall Length (ft)	3198.6		13123
Overall Loss (dB)	0.48	0.04	
ORL (dB)	N/A	N/A	
Attn Coeff (dB/km)	0.45	N/A	

Settings (Auto OTDR)	1310 nm	1550 nm
Auto OTDR		
Range (Auto)	4903 ft	4906 ft
Resolution (Auto)	0.8 ft	0.8 ft
Pulse Width (Auto)	20 ns	20 ns
Averaging Time (Auto)	9 s	15 s
Loss Threshold (Auto)	0.15 dB	0.15 dB

	Loss (dB)			Reflectance (dB)			Attn Coeff (dB/km)		
Events	1310 nm	1550 nm	Limit	1310 nm	1550 nm	Limit	1310 nm	1550 nm	Limit
3198.6 ft End	N/A	N/A		> -22.23	> -23.76		0.45	N/A	
578.3 ft Ghost		N/A			> -44.76			N/A	
0.0 ft Launch Event	0.03	-2.52	0.75	> -25.62	> -27.45		N/A	N/A	
-530.7 ft OTDR Port	N/A	N/A		-47.60	-48.60		N/A	N/A	

-WARNING: Negative Loss value found in test result.

LINKWARE™ PC
CABLE TEST MANAGEMENT SOFTWARE

Cable ID: ORANGE STRAND-2

Date / Time: 01/19/2018 10:03:15 AM
Cable Type: OS2 Singlemode
End1 Name: NEW WATER WELL

n = 1.4660 (1310 nm)
n = 1.4670 (1550 nm)
End2 Name: WATER TREATMENT BUILDING

Test Summary: PASS

Backscatter Coefficient: -80.0dB (1310 nm)
Backscatter Coefficient: -82.5dB (1550 nm)

OTDR End1 PASS

Test Limit: ANSI/TIA-568.3-D
Limits Version: 1.9500
Date / Time: 01/19/2018 10:03:15 AM
Operator: STEVEN
Tester: DTX-1800 (9421005 2.7800)
Module: DTX-OTDR-QMOD (1666506)
Calibration Date: 11/20/2017

Launch Only
Launch Type: Singlemode
Launch Length : 530.0 ft

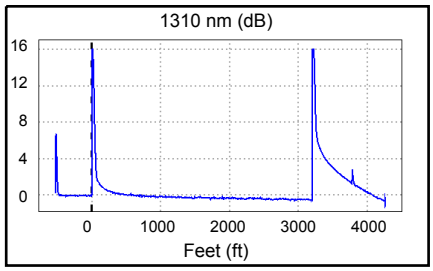

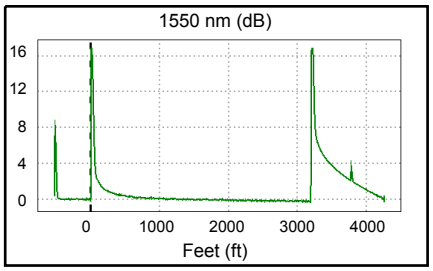

Overall Results	1310 nm	1550 nm	Limit
Overall Length (ft)	3199.5		13123
Overall Loss (dB)	0.49	0.26	
ORL (dB)	N/A	N/A	
Attn Coeff (dB/km)	0.60	0.47	

Settings (Auto OTDR)	1310 nm	1550 nm
Auto OTDR		
Range (Auto)	4875 ft	4932 ft
Resolution (Auto)	0.8 ft	0.8 ft
Pulse Width (Auto)	20 ns	20 ns
Averaging Time (Auto)	8 s	14 s
Loss Threshold (Auto)	0.15 dB	0.15 dB

	Loss (dB)			Reflectance (dB)			Attn Coeff (dB/km)		
Events	1310 nm	1550 nm	Limit	1310 nm	1550 nm	Limit	1310 nm	1550 nm	Limit
3199.5 ft End	N/A	N/A		> -22.13	> -23.44		0.60	0.47	
0.0 ft Launch Event	-0.10	-0.19	0.75	> -25.03	> -28.31		N/A	N/A	
-530.0 ft OTDR Port	N/A	N/A		-48.10	-48.99		N/A	N/A	

LINKWARE™PC
CABLE TEST MANAGEMENT SOFTWARE

Cable ID: ORANGE STRAND-14

Date / Time: 01/19/2018 10:55:04 AM
Cable Type: OS2 Singlemode
End1 Name: NEW WATER WELL

n = 1.4660 (1310 nm)
n = 1.4670 (1550 nm)
End2 Name: WATER TREATMENT BUILDING

Test Summary: PASS

Backscatter Coefficient: -80.0dB (1310 nm)
Backscatter Coefficient: -82.5dB (1550 nm)

OTDR End2 PASS

Test Limit: ANSI/TIA-568.3-D
Limits Version: 1.9500
Date / Time: 01/19/2018 10:55:04 AM
Operator: STEVEN
Tester: DTX-1800 (9421005 2.7800)
Module: DTX-OTDR-QMOD (1666506)
Calibration Date: 11/20/2017

Launch Only
Launch Type: Singlemode
Launch Length : 530.8 ft

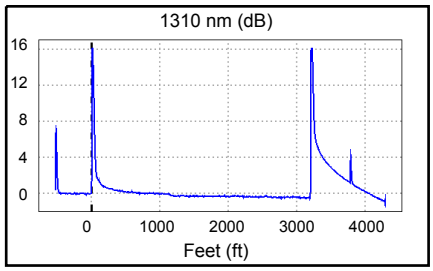

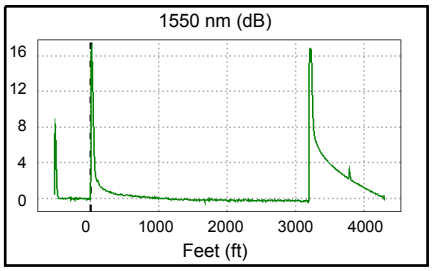

Overall Results	1310 nm	1550 nm	Limit
Overall Length (ft)	3198.6		13123
Overall Loss (dB)	0.46	0.25	
ORL (dB)	N/A	N/A	
Attn Coeff (dB/km)	0.50	0.86	

Settings (Auto OTDR)	1310 nm	1550 nm
Auto OTDR		
Range (Auto)	4960 ft	4963 ft
Resolution (Auto)	0.8 ft	0.8 ft
Pulse Width (Auto)	20 ns	20 ns
Averaging Time (Auto)	9 s	15 s
Loss Threshold (Auto)	0.15 dB	0.15 dB

	Loss (dB)			Reflectance (dB)			Attn Coeff (dB/km)		
Events	1310 nm	1550 nm	Limit	1310 nm	1550 nm	Limit	1310 nm	1550 nm	Limit
3198.6 ft End	N/A	N/A		> -22.23	> -23.33		0.41	0.86	
1135.5 ft Loss	0.18		0.30	N/A			0.67		
0.0 ft Launch Event	-0.21	-0.59	0.75	> -25.10	> -28.31		N/A	N/A	
-530.8 ft OTDR Port	N/A	N/A		-47.57	-48.62		N/A	N/A	

-WARNING: Negative Loss value found in test result.

LINKWARE™ PC
CABLE TEST MANAGEMENT SOFTWARE

Cable ID: RED STRAND-7

Date / Time: 01/19/2018 09:58:30 AM
Cable Type: OS2 Singlemode
End1 Name: NEW WATER WELL

n = 1.4660 (1310 nm)
n = 1.4670 (1550 nm)
End2 Name: WATER TREATMENT BUILDING

Test Summary: PASS

Backscatter Coefficient: -80.0dB (1310 nm)
Backscatter Coefficient: -82.5dB (1550 nm)

OTDR End1 PASS

Test Limit: ANSI/TIA-568.3-D
Limits Version: 1.9500
Date / Time: 01/19/2018 09:58:31 AM
Operator: STEVEN
Tester: DTX-1800 (9421005 2.7800)
Module: DTX-OTDR-QMOD (1666506)
Calibration Date: 11/20/2017

Launch Only
Launch Type: Singlemode
Launch Length : 530.0 ft

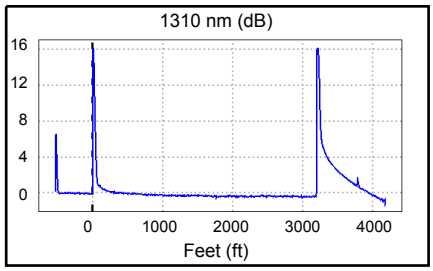

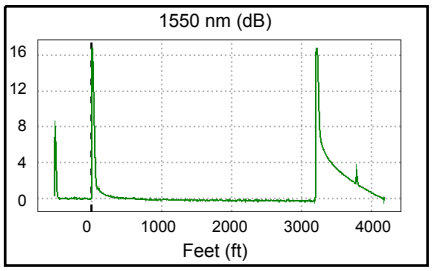

Overall Results	1310 nm	1550 nm	Limit
Overall Length (ft)	3200.3		13123
Overall Loss (dB)	0.36	0.29	
ORL (dB)	N/A	N/A	
Attn Coeff (dB/km)	0.28	0.30	

Settings (Auto OTDR)	1310 nm	1550 nm
Auto OTDR		
Range (Auto)	4846 ft	4849 ft
Resolution (Auto)	0.8 ft	0.8 ft
Pulse Width (Auto)	20 ns	20 ns
Averaging Time (Auto)	8 s	13 s
Loss Threshold (Auto)	0.15 dB	0.15 dB

	Loss (dB)			Reflectance (dB)			Attn Coeff (dB/km)		
Events	1310 nm	1550 nm	Limit	1310 nm	1550 nm	Limit	1310 nm	1550 nm	Limit
3200.3 ft End	N/A	N/A		> -22.46	> -23.54		0.28	0.30	
0.0 ft Launch Event	0.08	-0.01	0.75	> -25.51	> -29.17		N/A	N/A	
-530.0 ft OTDR Port	N/A	N/A		-48.31	-49.24		N/A	N/A	

LINKWARE™PC
CABLE TEST MANAGEMENT SOFTWARE

Cable ID: RED STRAND-19

Date / Time: 01/19/2018 11:03:57 AM
Cable Type: OS2 Singlemode
End1 Name: NEW WATER WELL

n = 1.4660 (1310 nm)
n = 1.4670 (1550 nm)
End2 Name: WATER TREATMENT BUILDING

Test Summary: PASS

Backscatter Coefficient: -80.0dB (1310 nm)
Backscatter Coefficient: -82.5dB (1550 nm)

OTDR End2 PASS

Test Limit: ANSI/TIA-568.3-D
Limits Version: 1.9500
Date / Time: 01/19/2018 11:03:57 AM
Operator: STEVEN
Tester: DTX-1800 (9421005 2.7800)
Module: DTX-OTDR-QMOD (1666506)
Calibration Date: 11/20/2017

Launch Only
Launch Type: Singlemode
Launch Length : 529.8 ft

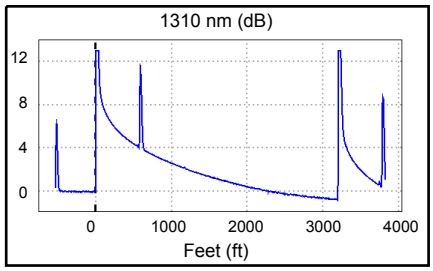

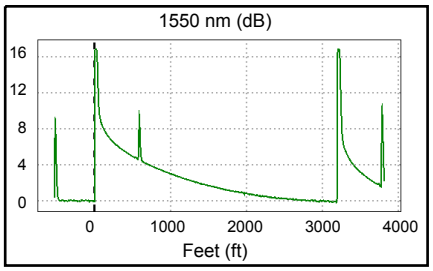

Overall Results	1310 nm	1550 nm	Limit
Overall Length (ft)	3198.4		13123
Overall Loss (dB)	0.71	0.15	
ORL (dB)	N/A	N/A	
Attn Coeff (dB/km)	N/A	2.00	

Settings (Auto OTDR)	1310 nm	1550 nm
Auto OTDR		
Range (Auto)	4477 ft	4482 ft
Resolution (Auto)	0.2 ft	1.7 ft
Pulse Width (Auto)	40 ns	20 ns
Averaging Time (Auto)	5 s	10 s
Loss Threshold (Auto)	0.15 dB	0.15 dB

Events	Loss (dB) 1310 nm	Loss (dB) 1550 nm	Loss (dB) Limit	Reflectance (dB) 1310 nm	Reflectance (dB) 1550 nm	Reflectance (dB) Limit	Attn Coeff (dB/km) 1310 nm	Attn Coeff (dB/km) 1550 nm	Attn Coeff (dB/km) Limit
3198.4 ft End	N/A	N/A		> -26.58	> -23.52		N/A	2.00	
578.5 ft Ghost	N/A	N/A		-37.26	> -47.39		N/A	N/A	
0.0 ft Launch Event	-1.34	-1.80	0.75	> -28.69	> -27.23		N/A	N/A	
-529.8 ft OTDR Port	N/A	N/A		-46.47	-48.64		N/A	N/A	

-WARNING: Negative Loss value found in test result.

LINKWARE™PC
CABLE TEST MANAGEMENT SOFTWARE

Cable ID: ROSE STRAND-11

Date / Time: 01/19/2018 10:29:58 AM
Cable Type: OS2 Singlemode
End1 Name: NEW WATER WELL

n = 1.4660 (1310 nm)
n = 1.4670 (1550 nm)
End2 Name: WATER TREATMENT BUILDING

Test Summary: PASS

Backscatter Coefficient: -80.0dB (1310 nm)
Backscatter Coefficient: -82.5dB (1550 nm)

OTDR End1 PASS

Test Limit: ANSI/TIA-568.3-D
Limits Version: 1.9500
Date / Time: 01/19/2018 10:29:58 AM
Operator: STEVEN
Tester: DTX-1800 (9421005 2.7800)
Module: DTX-OTDR-QMOD (1666506)
Calibration Date: 11/20/2017

Launch Only
Launch Type: Singlemode
Launch Length : 530.7 ft

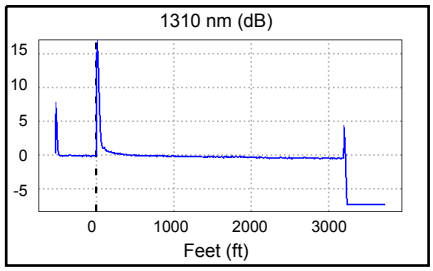

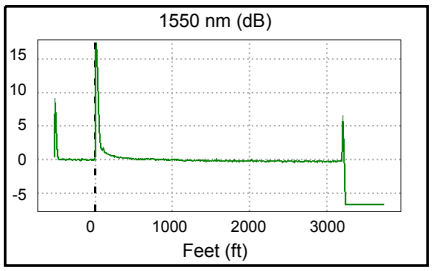

Overall Results	1310 nm	1550 nm	Limit
Overall Length (ft)	3198.6		13123
Overall Loss (dB)	0.39	0.27	
ORL (dB)	N/A	N/A	
Attn Coeff (dB/km)	0.51	0.32	

Settings (Auto OTDR)	1310 nm	1550 nm
Auto OTDR		
Range (Auto)	4268 ft	4410 ft
Resolution (Auto)	0.8 ft	0.4 ft
Pulse Width (Auto)	20 ns	20 ns
Averaging Time (Auto)	6 s	18 s
Loss Threshold (Auto)	0.15 dB	0.15 dB

	Loss (dB)			Reflectance (dB)			Attn Coeff (dB/km)		
Events	1310 nm	1550 nm	Limit	1310 nm	1550 nm	Limit	1310 nm	1550 nm	Limit
3198.6 ft End	N/A	N/A		-55.20	-52.63		0.51	0.32	
0.0 ft Launch Event	-0.11	-0.04	0.75	> -25.36	> -28.67		N/A	N/A	
-530.7 ft OTDR Port	N/A	N/A		-47.82	-48.74		N/A	N/A	

LINKWARE™ PC
CABLE TEST MANAGEMENT SOFTWARE

Cable ID: ROSE STRAND-23

Date / Time: 01/19/2018 11:15:24 AM
Cable Type: OS2 Singlemode
End1 Name: NEW WATER WELL

n = 1.4660 (1310 nm)
n = 1.4670 (1550 nm)
End2 Name: WATER TREATMENT BUILDING

Test Summary: PASS

Backscatter Coefficient: -80.0dB (1310 nm)
Backscatter Coefficient: -82.5dB (1550 nm)

OTDR End2 PASS

Test Limit: ANSI/TIA-568.3-D
Limits Version: 1.9500
Date / Time: 01/19/2018 11:15:24 AM
Operator: STEVEN
Tester: DTX-1800 (9421005 2.7800)
Module: DTX-OTDR-QMOD (1666506)
Calibration Date: 11/20/2017

Launch Only
Launch Type: Singlemode
Launch Length : 530.8 ft

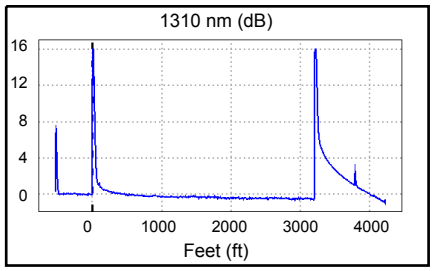

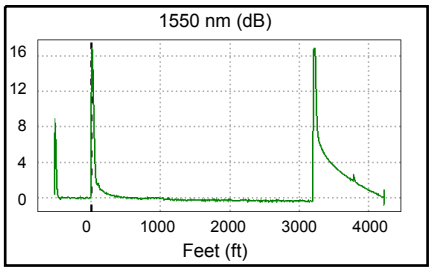

Overall Results	1310 nm	1550 nm	Limit
Overall Length (ft)	3198.6		13123
Overall Loss (dB)	0.55	0.37	
ORL (dB)	N/A	N/A	
Attn Coeff (dB/km)	0.46	0.36	

Settings (Auto OTDR)	1310 nm	1550 nm
Auto OTDR		
Range (Auto)	4889 ft	4892 ft
Resolution (Auto)	0.8 ft	0.8 ft
Pulse Width (Auto)	20 ns	20 ns
Averaging Time (Auto)	9 s	14 s
Loss Threshold (Auto)	0.15 dB	0.15 dB

	Loss (dB)			Reflectance (dB)			Attn Coeff (dB/km)		
Events	1310 nm	1550 nm	Limit	1310 nm	1550 nm	Limit	1310 nm	1550 nm	Limit
3198.6 ft End	N/A	N/A		> -22.06	> -23.13		0.46	0.36	
0.0 ft Launch Event	0.10	0.02	0.75	> -25.29	> -28.65		N/A	N/A	
-530.8 ft OTDR Port	N/A	N/A		-47.53	-48.55		N/A	N/A	

LINKWARE™ PC
CABLE TEST MANAGEMENT SOFTWARE

Cable ID: SLATE STRAND-5

Date / Time: 01/19/2018 10:10:06 AM
Cable Type: OS2 Singlemode
End1 Name: NEW WATER WELL

n = 1.4660 (1310 nm)
n = 1.4670 (1550 nm)
End2 Name: WATER TREATMENT BUILDING

Test Summary: PASS

Backscatter Coefficient: -80.0dB (1310 nm)
Backscatter Coefficient: -82.5dB (1550 nm)

OTDR End1 PASS

Test Limit: ANSI/TIA-568.3-D
Limits Version: 1.9500
Date / Time: 01/19/2018 10:10:07 AM
Operator: STEVEN
Tester: DTX-1800 (9421005 2.7800)
Module: DTX-OTDR-QMOD (1666506)
Calibration Date: 11/20/2017

Launch Only
Launch Type: Singlemode
Launch Length : 530.8 ft

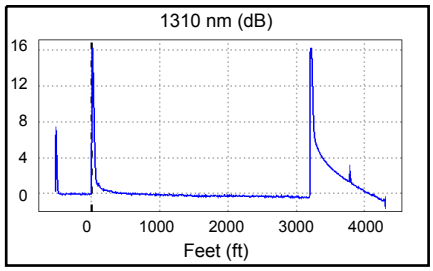

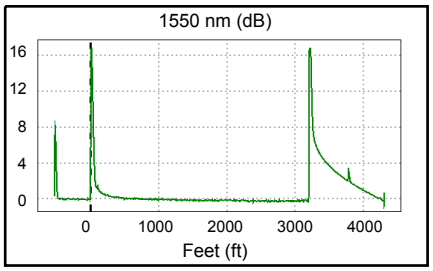

Overall Results	1310 nm	1550 nm	Limit
Overall Length (ft)	3198.6		13123
Overall Loss (dB)	0.36	0.26	
ORL (dB)	N/A	N/A	
Attn Coeff (dB/km)	0.44	0.40	

Settings (Auto OTDR)	1310 nm	1550 nm
Auto OTDR		
Range (Auto)	4875 ft	4974 ft
Resolution (Auto)	0.8 ft	0.8 ft
Pulse Width (Auto)	20 ns	20 ns
Averaging Time (Auto)	8 s	14 s
Loss Threshold (Auto)	0.15 dB	0.15 dB

	Loss (dB)			Reflectance (dB)			Attn Coeff (dB/km)		
Events	1310 nm	1550 nm	Limit	1310 nm	1550 nm	Limit	1310 nm	1550 nm	Limit
3198.6 ft End	N/A	N/A		> -22.28	> -23.47		0.44	0.40	
0.0 ft Launch Event	-0.08	-0.13	0.75	> -25.34	> -28.92		N/A	N/A	
-530.8 ft OTDR Port	N/A	N/A		-47.95	-48.97		N/A	N/A	

LINKWARE™ PC
CABLE TEST MANAGEMENT SOFTWARE

Cable ID: SLATE STRAND-17

Date / Time: 01/19/2018 11:00:17 AM
Cable Type: OS2 Singlemode
End1 Name: NEW WATER WELL

n = 1.4660 (1310 nm)
n = 1.4670 (1550 nm)
End2 Name: WATER TREATMENT BUILDING

Test Summary: PASS

Backscatter Coefficient: -80.0dB (1310 nm)
Backscatter Coefficient: -82.5dB (1550 nm)

OTDR End2 PASS

Test Limit: ANSI/TIA-568.3-D
Limits Version: 1.9500
Date / Time: 01/19/2018 11:00:17 AM
Operator: STEVEN
Tester: DTX-1800 (9421005 2.7800)
Module: DTX-OTDR-QMOD (1666506)
Calibration Date: 11/20/2017

Launch Only
Launch Type: Singlemode
Launch Length : 530.8 ft

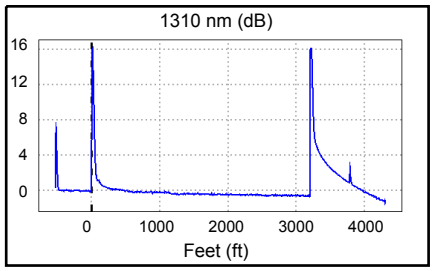

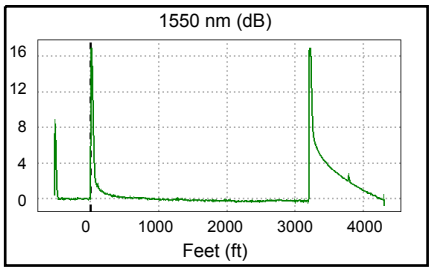

Overall Results	1310 nm	1550 nm	Limit
Overall Length (ft)	3198.6		13123
Overall Loss (dB)	0.54	0.28	
ORL (dB)	N/A	N/A	
Attn Coeff (dB/km)	0.39	0.47	

Settings (Auto OTDR)	1310 nm	1550 nm
Auto OTDR		
Range (Auto)	4876 ft	4974 ft
Resolution (Auto)	1.7 ft	0.8 ft
Pulse Width (Auto)	20 ns	20 ns
Averaging Time (Auto)	6 s	15 s
Loss Threshold (Auto)	0.15 dB	0.15 dB

	Loss (dB)			Reflectance (dB)			Attn Coeff (dB/km)		
Events	1310 nm	1550 nm	Limit	1310 nm	1550 nm	Limit	1310 nm	1550 nm	Limit
3198.6 ft End	N/A	N/A		> -22.10	> -23.29		0.39	0.47	
0.0 ft Launch Event	0.16	-0.18	0.75	> -25.17	> -28.66		N/A	N/A	
-530.8 ft OTDR Port	N/A	N/A		-47.71	-48.60		N/A	N/A	

LINKWARE™ PC
CABLE TEST MANAGEMENT SOFTWARE

Cable ID: STRAND-1

Test Summary: PASS

Date / Time: 01/19/2018 09:14:54 AM
Cable Type: OS2 Singlemode

n = 1.4660 (1310 nm)
n = 1.4670 (1550 nm)

Loss (R->M)

PASS

Date / Time: 01/19/2018 09:14:54 AM
Test Limit: TIA-568.3-D OSP (OS2)
Limits Version: 1.9500
Operator: STEVEN
DTX-1800 (9421005 v2.7800)
Module: DTX-SFM2(9742077)
Calibration Date: 06/09/2017
DTX-1800R (9421006 v2.7800)
Module: DTX-SFM2(9738095)
Calibration Date: 06/09/2017

Propagation Delay (ns)	4745	
Length ft	3183	PASS
Limit 131234		
	1310 nm	1550 nm
Result	PASS	PASS
Loss (dB)	1.95	1.58
Limit (dB)	2.19	2.19
Margin (dB)	0.24	0.61
Reference (dBm)	-6.35	-6.80

Number of Adapters: 2
Number of Splices: 1
Patch Type: OS2 Singlemode
Patch Length1 (ft): 3
Patch Length2 (ft): 3
Reference Date: 01/19/2018 07:54:26 AM
1 Jumper

Loss (M->R)

PASS

	1310 nm	1550 nm
Result	PASS	PASS
Loss (dB)	0.95	0.91
Limit (dB)	2.19	2.19
Margin (dB)	1.24	1.28
Reference (dBm)	-5.88	-5.37

Compliant Network Standards:

1000BASE-LX	100GBASE-ER4	100GBASE-LR4
10GBASE-E	10GBASE-L	10GBASE-LX4
40GBASE-ER4	40GBASE-FR	40GBASE-LR4
Fibre Channel 100-SM-LC-L	Fibre Channel 1200-SM-LC-L	Fibre Channel 1600-SM-LC-L
Fibre Channel 200-SM-LC-L	Fibre Channel 400-SM-LC-L	Fibre Channel 400-SM-LC-M
Fibre Channel 800-SM-LC-I	Fibre Channel 800-SM-LC-L	

LINKWARE™ PC
CABLE TEST MANAGEMENT SOFTWARE

Cable ID: STRAND-2

Test Summary: PASS

Date / Time: 01/19/2018 09:14:54 AM
Cable Type: OS2 Singlemode

n = 1.4660 (1310 nm)
n = 1.4670 (1550 nm)

Loss (R->M)

PASS

Date / Time: 01/19/2018 09:14:54 AM
Test Limit: TIA-568.3-D OSP (OS2)
Limits Version: 1.9500
Operator: STEVEN
DTX-1800 (9421005 v2.7800)
Module: DTX-SFM2(9742077)
Calibration Date: 06/09/2017
DTX-1800R (9421006 v2.7800)
Module: DTX-SFM2(9738095)
Calibration Date: 06/09/2017

Propagation Delay (ns)	4745	
Length ft	3183	PASS
Limit 131234		
	1310 nm	1550 nm
Result	PASS	PASS
Loss (dB)	1.77	1.20
Limit (dB)	2.19	2.19
Margin (dB)	0.42	0.99
Reference (dBm)	-6.35	-6.80

Number of Adapters: 2
Number of Splices: 1
Patch Type: OS2 Singlemode
Patch Length1 (ft): 3
Patch Length2 (ft): 3
Reference Date: 01/19/2018 07:54:26 AM
1 Jumper

Loss (M->R)

PASS

	1310 nm	1550 nm
Result	PASS	PASS
Loss (dB)	0.65	0.43
Limit (dB)	2.19	2.19
Margin (dB)	1.54	1.76
Reference (dBm)	-5.88	-5.37

Compliant Network Standards:

1000BASE-LX	100GBASE-ER4	100GBASE-LR4
10GBASE-E	10GBASE-L	10GBASE-LX4
40GBASE-ER4	40GBASE-FR	40GBASE-LR4
Fibre Channel 100-SM-LC-L	Fibre Channel 1200-SM-LC-L	Fibre Channel 1600-SM-LC-L
Fibre Channel 200-SM-LC-L	Fibre Channel 400-SM-LC-L	Fibre Channel 400-SM-LC-M
Fibre Channel 800-SM-LC-I	Fibre Channel 800-SM-LC-L	

LINKWARE™ PC
CABLE TEST MANAGEMENT SOFTWARE

Cable ID: STRAND-3

Test Summary: PASS

Date / Time: 01/19/2018 09:24:32 AM
Cable Type: OS2 Singlemode

n = 1.4660 (1310 nm)
n = 1.4670 (1550 nm)

Loss (R->M)

PASS

Date / Time: 01/19/2018 09:24:32 AM
Test Limit: TIA-568.3-D OSP (OS2)
Limits Version: 1.9500
Operator: STEVEN
DTX-1800 (9421005 v2.7800)
Module: DTX-SFM2(9742077)
Calibration Date: 06/09/2017
DTX-1800R (9421006 v2.7800)
Module: DTX-SFM2(9738095)
Calibration Date: 06/09/2017

Propagation Delay (ns)	4739	
Length ft	3179	PASS
Limit 131234		
	1310 nm	1550 nm
Result	PASS	PASS
Loss (dB)	0.98	0.78
Limit (dB)	2.19	2.19
Margin (dB)	1.21	1.41
Reference (dBm)	-6.35	-6.80

Number of Adapters: 2
Number of Splices: 1
Patch Type: OS2 Singlemode
Patch Length1 (ft): 3
Patch Length2 (ft): 3
Reference Date: 01/19/2018 07:54:26 AM
1 Jumper

Loss (M->R)

PASS

	1310 nm	1550 nm
Result	PASS	PASS
Loss (dB)	0.88	0.53
Limit (dB)	2.19	2.19
Margin (dB)	1.31	1.66
Reference (dBm)	-5.88	-5.37

Compliant Network Standards:

1000BASE-LX	100GBASE-ER4	100GBASE-LR4
10GBASE-E	10GBASE-L	10GBASE-LX4
40GBASE-ER4	40GBASE-FR	40GBASE-LR4
Fibre Channel 100-SM-LC-L	Fibre Channel 1200-SM-LC-L	Fibre Channel 1600-SM-LC-L
Fibre Channel 200-SM-LC-L	Fibre Channel 400-SM-LC-L	Fibre Channel 400-SM-LC-M
Fibre Channel 800-SM-LC-I	Fibre Channel 800-SM-LC-L	

LINKWARE™ PC
CABLE TEST MANAGEMENT SOFTWARE

Cable ID: STRAND-4

Test Summary: PASS

Date / Time: 01/19/2018 09:24:32 AM
Cable Type: OS2 Singlemode

n = 1.4660 (1310 nm)
n = 1.4670 (1550 nm)

Loss (R->M)

PASS

Date / Time: 01/19/2018 09:24:32 AM
Test Limit: TIA-568.3-D OSP (OS2)
Limits Version: 1.9500
Operator: STEVEN
DTX-1800 (9421005 v2.7800)
Module: DTX-SFM2(9742077)
Calibration Date: 06/09/2017
DTX-1800R (9421006 v2.7800)
Module: DTX-SFM2(9738095)
Calibration Date: 06/09/2017

Propagation Delay (ns)	4739	
Length ft	3179	PASS
Limit 131234		
	1310 nm	1550 nm
Result	PASS	PASS
Loss (dB)	1.56	0.94
Limit (dB)	2.19	2.19
Margin (dB)	0.63	1.25
Reference (dBm)	-6.35	-6.80

Number of Adapters: 2
Number of Splices: 1
Patch Type: OS2 Singlemode
Patch Length1 (ft): 3
Patch Length2 (ft): 3
Reference Date: 01/19/2018 07:54:26 AM
1 Jumper

Loss (M->R)

PASS

	1310 nm	1550 nm
Result	PASS	PASS
Loss (dB)	0.52	0.44
Limit (dB)	2.19	2.19
Margin (dB)	1.67	1.75
Reference (dBm)	-5.88	-5.37

Compliant Network Standards:

1000BASE-LX	100GBASE-ER4	100GBASE-LR4
10GBASE-E	10GBASE-L	10GBASE-LX4
40GBASE-ER4	40GBASE-FR	40GBASE-LR4
Fibre Channel 100-SM-LC-L	Fibre Channel 1200-SM-LC-L	Fibre Channel 1600-SM-LC-L
Fibre Channel 200-SM-LC-L	Fibre Channel 400-SM-LC-L	Fibre Channel 400-SM-LC-M
Fibre Channel 800-SM-LC-I	Fibre Channel 800-SM-LC-L	

LINKWARE™ PC
CABLE TEST MANAGEMENT SOFTWARE

Cable ID: STRAND-5

Test Summary: PASS

Date / Time: 01/19/2018 09:27:21 AM
Cable Type: OS2 Singlemode

n = 1.4660 (1310 nm)
n = 1.4670 (1550 nm)

Loss (R->M)

PASS

Date / Time: 01/19/2018 09:27:21 AM
Test Limit: TIA-568.3-D OSP (OS2)
Limits Version: 1.9500
Operator: STEVEN
DTX-1800 (9421005 v2.7800)
Module: DTX-SFM2(9742077)
Calibration Date: 06/09/2017
DTX-1800R (9421006 v2.7800)
Module: DTX-SFM2(9738095)
Calibration Date: 06/09/2017

Propagation Delay (ns)	4739	
Length ft	3179	PASS
Limit 131234		
	1310 nm	1550 nm
Result	PASS	PASS
Loss (dB)	0.96	0.78
Limit (dB)	2.19	2.19
Margin (dB)	1.23	1.41
Reference (dBm)	-6.35	-6.80

Number of Adapters: 2
Number of Splices: 1
Patch Type: OS2 Singlemode
Patch Length1 (ft): 3
Patch Length2 (ft): 3
Reference Date: 01/19/2018 07:54:26 AM
1 Jumper

Loss (M->R)

PASS

	1310 nm	1550 nm
Result	PASS	PASS
Loss (dB)	0.84	0.60
Limit (dB)	2.19	2.19
Margin (dB)	1.35	1.59
Reference (dBm)	-5.88	-5.37

Compliant Network Standards:

1000BASE-LX	100GBASE-ER4	100GBASE-LR4
10GBASE-E	10GBASE-L	10GBASE-LX4
40GBASE-ER4	40GBASE-FR	40GBASE-LR4
Fibre Channel 100-SM-LC-L	Fibre Channel 1200-SM-LC-L	Fibre Channel 1600-SM-LC-L
Fibre Channel 200-SM-LC-L	Fibre Channel 400-SM-LC-L	Fibre Channel 400-SM-LC-M
Fibre Channel 800-SM-LC-I	Fibre Channel 800-SM-LC-L	

LINKWARE™ PC
CABLE TEST MANAGEMENT SOFTWARE

Cable ID: STRAND-6

Test Summary: PASS

Date / Time: 01/19/2018 09:27:21 AM
Cable Type: OS2 Singlemode

n = 1.4660 (1310 nm)
n = 1.4670 (1550 nm)

Loss (R->M)

PASS

Date / Time: 01/19/2018 09:27:21 AM
Test Limit: TIA-568.3-D OSP (OS2)
Limits Version: 1.9500
Operator: STEVEN
DTX-1800 (9421005 v2.7800)
Module: DTX-SFM2(9742077)
Calibration Date: 06/09/2017
DTX-1800R (9421006 v2.7800)
Module: DTX-SFM2(9738095)
Calibration Date: 06/09/2017

Propagation Delay (ns)	4739	
Length ft	3179	PASS
Limit 131234		
	1310 nm	1550 nm
Result	PASS	PASS
Loss (dB)	1.50	0.89
Limit (dB)	2.19	2.19
Margin (dB)	0.69	1.30
Reference (dBm)	-6.35	-6.80

Number of Adapters: 2
Number of Splices: 1
Patch Type: OS2 Singlemode
Patch Length1 (ft): 3
Patch Length2 (ft): 3
Reference Date: 01/19/2018 07:54:26 AM
1 Jumper

Loss (M->R)

PASS

	1310 nm	1550 nm
Result	PASS	PASS
Loss (dB)	0.60	0.47
Limit (dB)	2.19	2.19
Margin (dB)	1.59	1.72
Reference (dBm)	-5.88	-5.37

Compliant Network Standards:

1000BASE-LX	100GBASE-ER4	100GBASE-LR4
10GBASE-E	10GBASE-L	10GBASE-LX4
40GBASE-ER4	40GBASE-FR	40GBASE-LR4
Fibre Channel 100-SM-LC-L	Fibre Channel 1200-SM-LC-L	Fibre Channel 1600-SM-LC-L
Fibre Channel 200-SM-LC-L	Fibre Channel 400-SM-LC-L	Fibre Channel 400-SM-LC-M
Fibre Channel 800-SM-LC-I	Fibre Channel 800-SM-LC-L	

LINKWARE™ PC
CABLE TEST MANAGEMENT SOFTWARE

Cable ID: STRAND-7

Test Summary: PASS

Date / Time: 01/19/2018 09:30:52 AM
Cable Type: OS2 Singlemode

n = 1.4660 (1310 nm)
n = 1.4670 (1550 nm)

Loss (R->M)

PASS

Date / Time: 01/19/2018 09:30:52 AM
Test Limit: TIA-568.3-D OSP (OS2)
Limits Version: 1.9500
Operator: STEVEN
DTX-1800 (9421005 v2.7800)
Module: DTX-SFM2(9742077)
Calibration Date: 06/09/2017
DTX-1800R (9421006 v2.7800)
Module: DTX-SFM2(9738095)
Calibration Date: 06/09/2017

Propagation Delay (ns)	4739	
Length ft	3179	PASS
Limit 131234		
	1310 nm	1550 nm
Result	PASS	PASS
Loss (dB)	1.15	0.95
Limit (dB)	2.19	2.19
Margin (dB)	1.04	1.24
Reference (dBm)	-6.35	-6.80

Number of Adapters: 2
Number of Splices: 1
Patch Type: OS2 Singlemode
Patch Length1 (ft): 3
Patch Length2 (ft): 3
Reference Date: 01/19/2018 07:54:26 AM
1 Jumper

Loss (M->R)

PASS

	1310 nm	1550 nm
Result	PASS	PASS
Loss (dB)	1.59	1.21
Limit (dB)	2.19	2.19
Margin (dB)	0.60	0.98
Reference (dBm)	-5.88	-5.37

Compliant Network Standards:

1000BASE-LX	100GBASE-ER4	100GBASE-LR4
10GBASE-E	10GBASE-L	10GBASE-LX4
40GBASE-ER4	40GBASE-FR	40GBASE-LR4
Fibre Channel 100-SM-LC-L	Fibre Channel 1200-SM-LC-L	Fibre Channel 1600-SM-LC-L
Fibre Channel 200-SM-LC-L	Fibre Channel 400-SM-LC-L	Fibre Channel 400-SM-LC-M
Fibre Channel 800-SM-LC-I	Fibre Channel 800-SM-LC-L	

LINKWARE™ PC
CABLE TEST MANAGEMENT SOFTWARE

Cable ID: STRAND-8

Test Summary: PASS

Date / Time: 01/19/2018 09:30:52 AM
Cable Type: OS2 Singlemode

n = 1.4660 (1310 nm)
n = 1.4670 (1550 nm)

Loss (R->M)

PASS

Date / Time: 01/19/2018 09:30:52 AM
Test Limit: TIA-568.3-D OSP (OS2)
Limits Version: 1.9500
Operator: STEVEN
DTX-1800 (9421005 v2.7800)
Module: DTX-SFM2(9742077)
Calibration Date: 06/09/2017
DTX-1800R (9421006 v2.7800)
Module: DTX-SFM2(9738095)
Calibration Date: 06/09/2017

Propagation Delay (ns)	4739	
Length ft	3179	PASS
Limit 131234		
	1310 nm	1550 nm
Result	PASS	PASS
Loss (dB)	1.14	0.94
Limit (dB)	2.19	2.19
Margin (dB)	1.05	1.25
Reference (dBm)	-6.35	-6.80

Number of Adapters: 2
Number of Splices: 1
Patch Type: OS2 Singlemode
Patch Length1 (ft): 3
Patch Length2 (ft): 3
Reference Date: 01/19/2018 07:54:26 AM
1 Jumper

Loss (M->R)

PASS

	1310 nm	1550 nm
Result	PASS	PASS
Loss (dB)	1.59	1.21
Limit (dB)	2.19	2.19
Margin (dB)	0.60	0.98
Reference (dBm)	-5.88	-5.37

Compliant Network Standards:

1000BASE-LX	100GBASE-ER4	100GBASE-LR4
10GBASE-E	10GBASE-L	10GBASE-LX4
40GBASE-ER4	40GBASE-FR	40GBASE-LR4
Fibre Channel 100-SM-LC-L	Fibre Channel 1200-SM-LC-L	Fibre Channel 1600-SM-LC-L
Fibre Channel 200-SM-LC-L	Fibre Channel 400-SM-LC-L	Fibre Channel 400-SM-LC-M
Fibre Channel 800-SM-LC-I	Fibre Channel 800-SM-LC-L	

LINKWARE™ PC
CABLE TEST MANAGEMENT SOFTWARE

Cable ID: STRAND-9

Test Summary: PASS

Date / Time: 01/19/2018 09:47:58 AM
Cable Type: OS2 Singlemode

n = 1.4660 (1310 nm)
n = 1.4670 (1550 nm)

Loss (R->M)

PASS

Date / Time: 01/19/2018 09:47:58 AM
Test Limit: TIA-568.3-D OSP (OS2)
Limits Version: 1.9500
Operator: STEVEN
DTX-1800 (9421005 v2.7800)
Module: DTX-SFM2(9742077)
Calibration Date: 06/09/2017
DTX-1800R (9421006 v2.7800)
Module: DTX-SFM2(9738095)
Calibration Date: 06/09/2017

Propagation Delay (ns)	4739	
Length ft	3179	PASS
Limit 131234		
	1310 nm	1550 nm
Result	PASS	PASS
Loss (dB)	1.48	0.85
Limit (dB)	2.19	2.19
Margin (dB)	0.71	1.34
Reference (dBm)	-6.35	-6.80

Number of Adapters: 2
Number of Splices: 1
Patch Type: OS2 Singlemode
Patch Length1 (ft): 3
Patch Length2 (ft): 3
Reference Date: 01/19/2018 07:54:26 AM
1 Jumper

Loss (M->R)

PASS

	1310 nm	1550 nm
Result	PASS	PASS
Loss (dB)	0.59	0.42
Limit (dB)	2.19	2.19
Margin (dB)	1.60	1.77
Reference (dBm)	-5.88	-5.37

Compliant Network Standards:

1000BASE-LX	100GBASE-ER4	100GBASE-LR4
10GBASE-E	10GBASE-L	10GBASE-LX4
40GBASE-ER4	40GBASE-FR	40GBASE-LR4
Fibre Channel 100-SM-LC-L	Fibre Channel 1200-SM-LC-L	Fibre Channel 1600-SM-LC-L
Fibre Channel 200-SM-LC-L	Fibre Channel 400-SM-LC-L	Fibre Channel 400-SM-LC-M
Fibre Channel 800-SM-LC-I	Fibre Channel 800-SM-LC-L	

LINKWARE™ PC
CABLE TEST MANAGEMENT SOFTWARE

Cable ID: STRAND-10

Test Summary: PASS

Date / Time: 01/19/2018 09:47:58 AM
Cable Type: OS2 Singlemode

n = 1.4660 (1310 nm)
n = 1.4670 (1550 nm)

Loss (R->M)

PASS

Date / Time: 01/19/2018 09:47:58 AM
Test Limit: TIA-568.3-D OSP (OS2)
Limits Version: 1.9500
Operator: STEVEN
DTX-1800 (9421005 v2.7800)
Module: DTX-SFM2(9742077)
Calibration Date: 06/09/2017
DTX-1800R (9421006 v2.7800)
Module: DTX-SFM2(9738095)
Calibration Date: 06/09/2017

Propagation Delay (ns)	4739	
Length ft	3179	PASS
Limit 131234		
	1310 nm	1550 nm
Result	PASS	PASS
Loss (dB)	1.34	0.93
Limit (dB)	2.19	2.19
Margin (dB)	0.85	1.26
Reference (dBm)	-6.35	-6.80

Number of Adapters: 2
Number of Splices: 1
Patch Type: OS2 Singlemode
Patch Length1 (ft): 3
Patch Length2 (ft): 3
Reference Date: 01/19/2018 07:54:26 AM
1 Jumper

Loss (M->R)

PASS

	1310 nm	1550 nm
Result	PASS	PASS
Loss (dB)	0.78	0.52
Limit (dB)	2.19	2.19
Margin (dB)	1.41	1.67
Reference (dBm)	-5.88	-5.37

Compliant Network Standards:

1000BASE-LX	100GBASE-ER4	100GBASE-LR4
10GBASE-E	10GBASE-L	10GBASE-LX4
40GBASE-ER4	40GBASE-FR	40GBASE-LR4
Fibre Channel 100-SM-LC-L	Fibre Channel 1200-SM-LC-L	Fibre Channel 1600-SM-LC-L
Fibre Channel 200-SM-LC-L	Fibre Channel 400-SM-LC-L	Fibre Channel 400-SM-LC-M
Fibre Channel 800-SM-LC-I	Fibre Channel 800-SM-LC-L	

LINKWARE™ PC
CABLE TEST MANAGEMENT SOFTWARE

Cable ID: STRAND-11

Test Summary: PASS

Date / Time: 01/19/2018 09:12:25 AM
Cable Type: OS2 Singlemode

n = 1.4660 (1310 nm)
n = 1.4670 (1550 nm)

Loss (R->M)

PASS

Date / Time: 01/19/2018 09:12:25 AM
Test Limit: TIA-568.3-D OSP (OS2)
Limits Version: 1.9500
Operator: STEVEN
DTX-1800 (9421005 v2.7800)
Module: DTX-SFM2(9742077)
Calibration Date: 06/09/2017
DTX-1800R (9421006 v2.7800)
Module: DTX-SFM2(9738095)
Calibration Date: 06/09/2017

Propagation Delay (ns)	4739	
Length ft	3179	PASS
Limit 131234		
	1310 nm	1550 nm
Result	PASS	PASS
Loss (dB)	0.94	0.77
Limit (dB)	2.19	2.19
Margin (dB)	1.25	1.42
Reference (dBm)	-6.35	-6.80

Number of Adapters: 2
Number of Splices: 1
Patch Type: OS2 Singlemode
Patch Length1 (ft): 3
Patch Length2 (ft): 3
Reference Date: 01/19/2018 07:54:26 AM
1 Jumper

Loss (M->R)

PASS

	1310 nm	1550 nm
Result	PASS	PASS
Loss (dB)	0.85	0.69
Limit (dB)	2.19	2.19
Margin (dB)	1.34	1.50
Reference (dBm)	-5.88	-5.37

Compliant Network Standards:

1000BASE-LX	100GBASE-ER4	100GBASE-LR4
10GBASE-E	10GBASE-L	10GBASE-LX4
40GBASE-ER4	40GBASE-FR	40GBASE-LR4
Fibre Channel 100-SM-LC-L	Fibre Channel 1200-SM-LC-L	Fibre Channel 1600-SM-LC-L
Fibre Channel 200-SM-LC-L	Fibre Channel 400-SM-LC-L	Fibre Channel 400-SM-LC-M
Fibre Channel 800-SM-LC-I	Fibre Channel 800-SM-LC-L	

LINKWARE™ PC
CABLE TEST MANAGEMENT SOFTWARE

Cable ID: STRAND-12

Test Summary: PASS

Date / Time: 01/19/2018 09:12:25 AM
Cable Type: OS2 Singlemode

n = 1.4660 (1310 nm)
n = 1.4670 (1550 nm)

Loss (R->M)

PASS

Date / Time: 01/19/2018 09:12:25 AM
Test Limit: TIA-568.3-D OSP (OS2)
Limits Version: 1.9500
Operator: STEVEN
DTX-1800 (9421005 v2.7800)
Module: DTX-SFM2(9742077)
Calibration Date: 06/09/2017
DTX-1800R (9421006 v2.7800)
Module: DTX-SFM2(9738095)
Calibration Date: 06/09/2017

Propagation Delay (ns)	4739	
Length ft	3179	PASS
Limit 131234		
	1310 nm	1550 nm
Result	PASS	PASS
Loss (dB)	2.15	1.59
Limit (dB)	2.19	2.19
Margin (dB)	0.04	0.60
Reference (dBm)	-6.35	-6.80

Number of Adapters: 2
Number of Splices: 1
Patch Type: OS2 Singlemode
Patch Length1 (ft): 3
Patch Length2 (ft): 3
Reference Date: 01/19/2018 07:54:26 AM
1 Jumper

Loss (M->R)

PASS

	1310 nm	1550 nm
Result	PASS	PASS
Loss (dB)	1.72	1.18
Limit (dB)	2.19	2.19
Margin (dB)	0.47	1.01
Reference (dBm)	-5.88	-5.37

Compliant Network Standards:

1000BASE-LX	100GBASE-ER4	100GBASE-LR4
10GBASE-E	10GBASE-L	10GBASE-LX4
40GBASE-ER4	40GBASE-FR	40GBASE-LR4
Fibre Channel 100-SM-LC-L	Fibre Channel 1200-SM-LC-L	Fibre Channel 1600-SM-LC-L
Fibre Channel 200-SM-LC-L	Fibre Channel 400-SM-LC-L	Fibre Channel 400-SM-LC-M
Fibre Channel 800-SM-LC-I	Fibre Channel 800-SM-LC-L	

LINKWARE™ PC
CABLE TEST MANAGEMENT SOFTWARE

Cable ID: TEST-1

Date / Time: 01/18/2018 09:49:46 AM
Cable Type: OS2 Singlemode
End1 Name: NEW WATER WELL

n = 1.4660 (1310 nm)
n = 1.4670 (1550 nm)
End2 Name: 30158

Test Summary: PASS

Backscatter Coefficient: -80.0dB (1310 nm)
Backscatter Coefficient: -82.5dB (1550 nm)

OTDR End1 PASS

Test Limit: ANSI/TIA-568.3-D
Limits Version: 1.9500
Date / Time: 01/18/2018 09:49:46 AM
Operator: STEVEN
Tester: DTX-1800 (9421005 2.7800)
Module: DTX-OTDR-QMOD (1666506)
Calibration Date: 11/20/2017

Launch Only
Launch Type: Singlemode
Launch Length : 429.8 ft

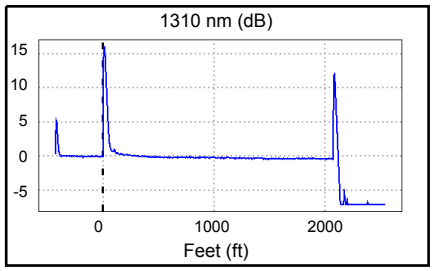

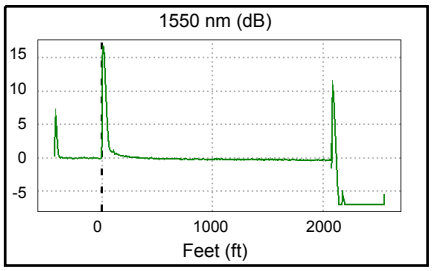

Overall Results	1310 nm	1550 nm	Limit
Overall Length (ft)	2076.9		13123
Overall Loss (dB)	0.37	0.30	
ORL (dB)	N/A	N/A	
Attn Coeff (dB/km)	0.48	0.59	

Settings (Auto OTDR)	1310 nm	1550 nm
Auto OTDR		
Range (Auto)	3112 ft	3116 ft
Resolution (Auto)	0.4 ft	0.4 ft
Pulse Width (Auto)	20 ns	20 ns
Averaging Time (Auto)	8 s	13 s
Loss Threshold (Auto)	0.15 dB	0.15 dB

	Loss (dB)			Reflectance (dB)			Attn Coeff (dB/km)		
Events	1310 nm	1550 nm	Limit	1310 nm	1550 nm	Limit	1310 nm	1550 nm	Limit
2076.9 ft End	N/A	N/A		-35.76	-41.93		0.48	0.59	
0.0 ft Launch Event	0.06	-0.07	0.75	> -25.83	> -29.41		N/A	N/A	
-429.8 ft OTDR Port	N/A	N/A		-50.80	-52.76		N/A	N/A	

LINKWARE™PC
CABLE TEST MANAGEMENT SOFTWARE

Cable ID: VIOLET STRAND-10

Date / Time: 01/19/2018 10:28:50 AM
Cable Type: OS2 Singlemode
End1 Name: NEW WATER WELL

n = 1.4660 (1310 nm)
n = 1.4670 (1550 nm)
End2 Name: WATER TREATMENT BUILDING

Test Summary: PASS

Backscatter Coefficient: -80.0dB (1310 nm)
Backscatter Coefficient: -82.5dB (1550 nm)

OTDR End1 PASS

Test Limit: ANSI/TIA-568.3-D
Limits Version: 1.9500
Date / Time: 01/19/2018 10:28:50 AM
Operator: STEVEN
Tester: DTX-1800 (9421005 2.7800)
Module: DTX-OTDR-QMOD (1666506)
Calibration Date: 11/20/2017

Launch Only
Launch Type: Singlemode
Launch Length : 530.7 ft

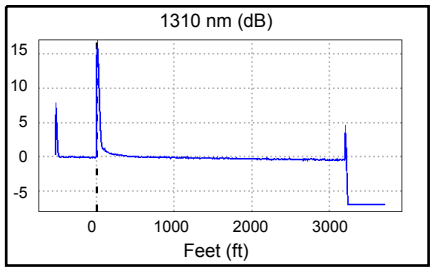

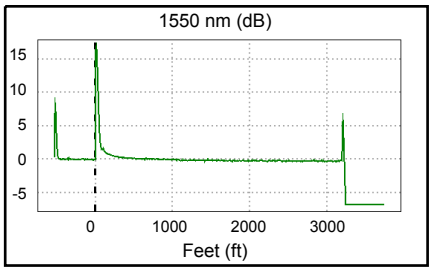

Overall Results	1310 nm	1550 nm	Limit
Overall Length (ft)	3198.6		13123
Overall Loss (dB)	0.40	0.17	
ORL (dB)	N/A	N/A	
Attn Coeff (dB/km)	0.58	N/A	

Settings (Auto OTDR)	1310 nm	1550 nm
Auto OTDR		
Range (Auto)	4253 ft	4410 ft
Resolution (Auto)	0.8 ft	0.4 ft
Pulse Width (Auto)	20 ns	20 ns
Averaging Time (Auto)	5 s	15 s
Loss Threshold (Auto)	0.15 dB	0.15 dB

	Loss (dB)			Reflectance (dB)			Attn Coeff (dB/km)		
Events	1310 nm	1550 nm	Limit	1310 nm	1550 nm	Limit	1310 nm	1550 nm	Limit
3198.6 ft End	N/A	N/A		-55.27	-52.58		0.58	N/A	
0.0 ft Launch Event	-0.16	-0.14	0.75	> -25.36	> -28.67		N/A	N/A	
-530.7 ft OTDR Port	N/A	N/A		-47.81	-48.77		N/A	N/A	

LINKWARE™PC
CABLE TEST MANAGEMENT SOFTWARE

Cable ID: VIOLET STRAND-22

Date / Time: 01/19/2018 11:13:41 AM
Cable Type: OS2 Singlemode
End1 Name: NEW WATER WELL

n = 1.4660 (1310 nm)
n = 1.4670 (1550 nm)
End2 Name: WATER TREATMENT BUILDING

Test Summary: PASS

Backscatter Coefficient: -80.0dB (1310 nm)
Backscatter Coefficient: -82.5dB (1550 nm)

OTDR End2 PASS

Test Limit: ANSI/TIA-568.3-D
Limits Version: 1.9500
Date / Time: 01/19/2018 11:13:41 AM
Operator: STEVEN
Tester: DTX-1800 (9421005 2.7800)
Module: DTX-OTDR-QMOD (1666506)
Calibration Date: 11/20/2017

Launch Only
Launch Type: Singlemode
Launch Length : 530.8 ft

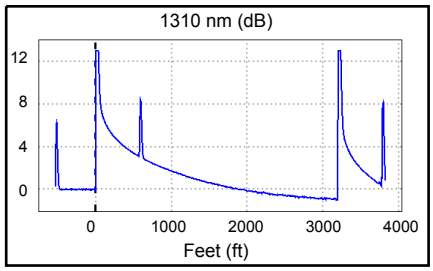

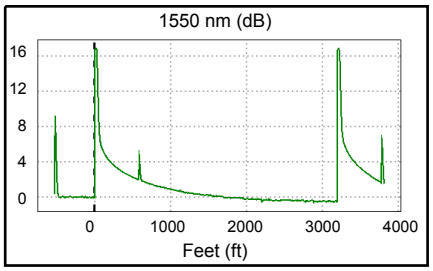

Overall Results	1310 nm	1550 nm	Limit
Overall Length (ft)	3196.7		13123
Overall Loss (dB)	0.91	0.54	
ORL (dB)	N/A	N/A	
Attn Coeff (dB/km)	1.51	1.06	

Settings (Auto OTDR)	1310 nm	1550 nm
Auto OTDR		
Range (Auto)	4477 ft	4482 ft
Resolution (Auto)	0.2 ft	1.7 ft
Pulse Width (Auto)	40 ns	20 ns
Averaging Time (Auto)	5 s	12 s
Loss Threshold (Auto)	0.15 dB	0.15 dB

	Loss (dB)			Reflectance (dB)			Attn Coeff (dB/km)		
Events	1310 nm	1550 nm	Limit	1310 nm	1550 nm	Limit	1310 nm	1550 nm	Limit
3196.7 ft End	N/A	N/A		> -26.18	> -22.73		1.51	1.06	
1679.5 ft Loss		0.16	0.30		N/A			N/A	
579.1 ft Ghost	N/A	N/A		> -43.53	> -57.23		N/A	N/A	
0.0 ft Launch Event	-0.56	-1.41	0.75	> -28.69	> -27.24		N/A	N/A	
-530.8 ft OTDR Port	N/A	N/A		-46.45	-48.68		N/A	N/A	

-WARNING: Negative Loss value found in test result.

LINKWARE™ PC
CABLE TEST MANAGEMENT SOFTWARE

Cable ID: WHITE STRAND-6

Date / Time: 01/19/2018 10:12:01 AM
Cable Type: OS2 Singlemode
End1 Name: NEW WATER WELL

n = 1.4660 (1310 nm)
n = 1.4670 (1550 nm)
End2 Name: WATER TREATMENT BUILDING

Test Summary: PASS

Backscatter Coefficient: -80.0dB (1310 nm)
Backscatter Coefficient: -82.5dB (1550 nm)

OTDR End1 PASS

Test Limit: ANSI/TIA-568.3-D
Limits Version: 1.9500
Date / Time: 01/19/2018 10:12:01 AM
Operator: STEVEN
Tester: DTX-1800 (9421005 2.7800)
Module: DTX-OTDR-QMOD (1666506)
Calibration Date: 11/20/2017

Launch Only
Launch Type: Singlemode
Launch Length : 530.8 ft

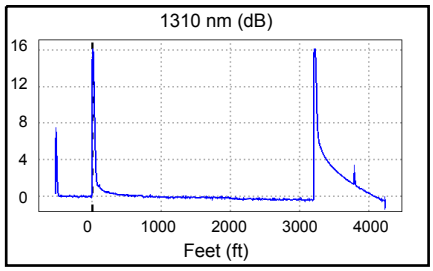

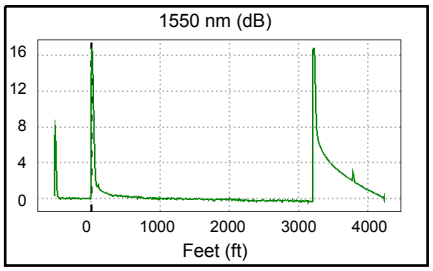

Overall Results	1310 nm	1550 nm	Limit
Overall Length (ft)	3197.8		13123
Overall Loss (dB)	0.39	0.32	
ORL (dB)	N/A	N/A	
Attn Coeff (dB/km)	0.60	0.53	

Settings (Auto OTDR)	1310 nm	1550 nm
Auto OTDR		
Range (Auto)	4889 ft	4903 ft
Resolution (Auto)	0.8 ft	0.8 ft
Pulse Width (Auto)	20 ns	20 ns
Averaging Time (Auto)	9 s	14 s
Loss Threshold (Auto)	0.15 dB	0.15 dB

	Loss (dB)			Reflectance (dB)			Attn Coeff (dB/km)		
Events	1310 nm	1550 nm	Limit	1310 nm	1550 nm	Limit	1310 nm	1550 nm	Limit
3197.8 ft End	N/A	N/A		> -22.19	> -23.36		0.60	0.53	
0.0 ft Launch Event	-0.19	-0.20	0.75	> -25.34	> -28.93		N/A	N/A	
-530.8 ft OTDR Port	N/A	N/A		-47.97	-48.95		N/A	N/A	

LINKWARE™ PC
CABLE TEST MANAGEMENT SOFTWARE

Cable ID: WHITE STRAND-18

Date / Time: 01/19/2018 11:01:54 AM
Cable Type: OS2 Singlemode
End1 Name: NEW WATER WELL

n = 1.4660 (1310 nm)
n = 1.4670 (1550 nm)
End2 Name: WATER TREATMENT BUILDING

Test Summary: PASS

Backscatter Coefficient: -80.0dB (1310 nm)
Backscatter Coefficient: -82.5dB (1550 nm)

OTDR End2 PASS

Test Limit: ANSI/TIA-568.3-D
Limits Version: 1.9500
Date / Time: 01/19/2018 11:01:54 AM
Operator: STEVEN
Tester: DTX-1800 (9421005 2.7800)
Module: DTX-OTDR-QMOD (1666506)
Calibration Date: 11/20/2017

Launch Only
Launch Type: Singlemode
Launch Length : 530.8 ft

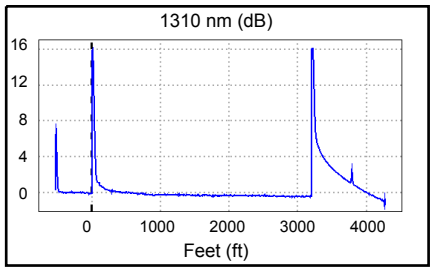

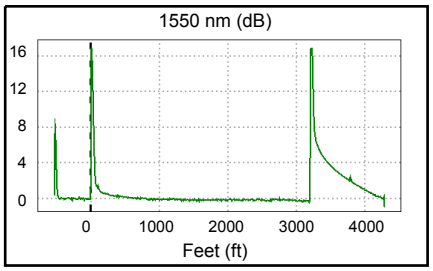

Overall Results	1310 nm	1550 nm	Limit
Overall Length (ft)	3198.6		13123
Overall Loss (dB)	0.42	0.25	
ORL (dB)	N/A	N/A	
Attn Coeff (dB/km)	0.47	0.66	

Settings (Auto OTDR)	1310 nm	1550 nm
Auto OTDR		
Range (Auto)	4933 ft	4946 ft
Resolution (Auto)	1.7 ft	0.8 ft
Pulse Width (Auto)	20 ns	20 ns
Averaging Time (Auto)	5 s	14 s
Loss Threshold (Auto)	0.15 dB	0.15 dB

	Loss (dB)			Reflectance (dB)			Attn Coeff (dB/km)		
Events	1310 nm	1550 nm	Limit	1310 nm	1550 nm	Limit	1310 nm	1550 nm	Limit
3198.6 ft End	N/A	N/A		> -22.34	> -23.36		0.47	0.66	
0.0 ft Launch Event	-0.04	-0.40	0.75	> -25.39	> -28.77		N/A	N/A	
-530.8 ft OTDR Port	N/A	N/A		-47.72	-48.60		N/A	N/A	

-WARNING: Negative Loss value found in test result.

LINKWARE™ PC
CABLE TEST MANAGEMENT SOFTWARE

Cable ID: YELLOW STRAND-9

Date / Time: 01/19/2018 10:17:05 AM
Cable Type: OS2 Singlemode
End1 Name: NEW WATER WELL

n = 1.4660 (1310 nm)
n = 1.4670 (1550 nm)
End2 Name: WATER TREATMENT BUILDING

Test Summary: PASS

Backscatter Coefficient: -80.0dB (1310 nm)
Backscatter Coefficient: -82.5dB (1550 nm)

OTDR End1 PASS

Test Limit: ANSI/TIA-568.3-D
Limits Version: 1.9500
Date / Time: 01/19/2018 10:17:05 AM
Operator: STEVEN
Tester: DTX-1800 (9421005 2.7800)
Module: DTX-OTDR-QMOD (1666506)
Calibration Date: 11/20/2017

Launch Only
Launch Type: Singlemode
Launch Length : 530.8 ft

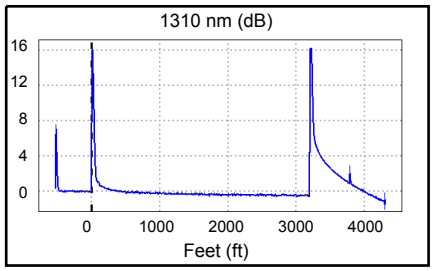

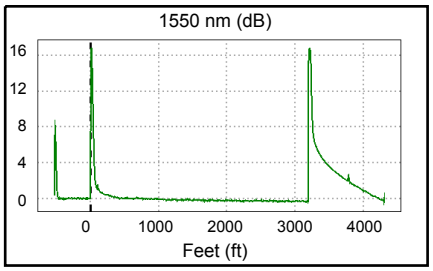

Overall Results	1310 nm	1550 nm	Limit
Overall Length (ft)	3198.6		13123
Overall Loss (dB)	0.50	0.34	
ORL (dB)	N/A	N/A	
Attn Coeff (dB/km)	0.46	0.32	

Settings (Auto OTDR)	1310 nm	1550 nm
Auto OTDR		
Range (Auto)	4975 ft	4978 ft
Resolution (Auto)	1.7 ft	0.8 ft
Pulse Width (Auto)	20 ns	20 ns
Averaging Time (Auto)	5 s	15 s
Loss Threshold (Auto)	0.15 dB	0.15 dB

	Loss (dB)			Reflectance (dB)			Attn Coeff (dB/km)		
Events	1310 nm	1550 nm	Limit	1310 nm	1550 nm	Limit	1310 nm	1550 nm	Limit
3198.6 ft End	N/A	N/A		> -22.09	> -23.43		0.46	0.32	
0.0 ft Launch Event	0.06	0.02	0.75	> -25.35	> -28.96		N/A	N/A	
-530.8 ft OTDR Port	N/A	N/A		-48.06	-49.02		N/A	N/A	

LINKWARE™ PC
CABLE TEST MANAGEMENT SOFTWARE

Cable ID: YELLOW STRAND-21

Date / Time: 01/19/2018 11:08:22 AM
Cable Type: OS2 Singlemode
End1 Name: NEW WATER WELL

n = 1.4660 (1310 nm)
n = 1.4670 (1550 nm)
End2 Name: WATER TREATMENT BUILDING

Test Summary: PASS

Backscatter Coefficient: -80.0dB (1310 nm)
Backscatter Coefficient: -82.5dB (1550 nm)

OTDR End2 PASS

Test Limit: ANSI/TIA-568.3-D
Limits Version: 1.9500
Date / Time: 01/19/2018 11:08:21 AM
Operator: STEVEN
Tester: DTX-1800 (9421005 2.7800)
Module: DTX-OTDR-QMOD (1666506)
Calibration Date: 11/20/2017

Launch Only
Launch Type: Singlemode
Launch Length : 530.8 ft

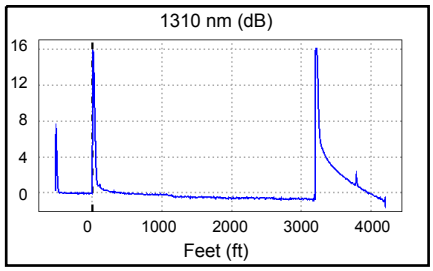

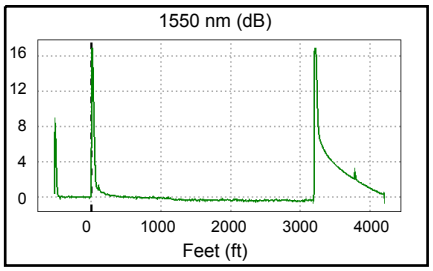

Overall Results	1310 nm	1550 nm	Limit
Overall Length (ft)	3198.6		13123
Overall Loss (dB)	0.67	0.40	
ORL (dB)	N/A	N/A	
Attn Coeff (dB/km)	0.63	0.33	

Settings (Auto OTDR)	1310 nm	1550 nm
Auto OTDR		
Range (Auto)	4847 ft	4875 ft
Resolution (Auto)	1.7 ft	0.8 ft
Pulse Width (Auto)	20 ns	20 ns
Averaging Time (Auto)	5 s	16 s
Loss Threshold (Auto)	0.15 dB	0.15 dB

	Loss (dB)			Reflectance (dB)			Attn Coeff (dB/km)		
Events	1310 nm	1550 nm	Limit	1310 nm	1550 nm	Limit	1310 nm	1550 nm	Limit
3198.6 ft End	N/A	N/A		> -21.82	> -23.04		0.49	0.13	
1139.8 ft Loss	0.16	0.16	0.30	N/A	N/A		0.88	0.69	
0.0 ft Launch Event	-0.11	-0.09	0.75	> -25.72	> -29.08		N/A	N/A	
-530.8 ft OTDR Port	N/A	N/A		-47.66	-48.51		N/A	N/A	

Alarm Verification									
Alarm	**System Effect**	**Alarm Reported to HMI**	**Alarm Remotely Notified**	**Reset/Remotely Operable**	**Date and Time Tested**	**Opeartor**	**Number of Times Tested**	**Pass/Fail**	**Notes**
Well 239 Vault Leak	Extraction Well Pump 105 Failed, Shutdown Well	Y	Y	Y	1/23/2018 15:43	TC	1	Pass	
Well 239 Conveyance Leak	Extraction Well Pump 105 Failed, Shutdown Well	Y	Y	Y	1/23/2018 15:57	TC	2	Pass	
Well 239 Drawdown Level	Extraction Well Pump 105 Failed, Shutdown Well	Y	Y	Y	1/23/2018 16:03	TC	1	Pass	
Well 239 Vault Hatch Door Open	None	Y	Y	Y	1/23/2018 16:23	TC	1	Pass	

RMCI INC
GENERAL CONTRACTOR
N.M. LICENSE No. 31964

KIRTLAND AIR FORCE BASE- 106239 CONVEYANCE LINE

PUNCHLIST

GENERATED 12-8-17

PUNCHLIST TASKS

Punchlist Item Description	Date Completed	RMCI Initial	EA Engineering Initial
Repair silt fence throughout the project	12-11-17	JP	TC
Remove remaining construction debris and dunnage throughout the project	12-11-17	JP	TC
Empty the waterline	12-11-17	JP	TC
Finish painting the bollards	12-8-17	JP	TC
Finish painting the wye in the junction vault	12-8-17	JP	TC
Back drag equipment ruts throughout the project	12-11-17	JP	TC
Clean staging area	12-15-17	JP	KM
PENDING CONFIRMATION FROM EA ENGINEERING			
Re-install the 8" x 8" wooden posts at Sta. 20+00	12-11-17	JP	TC

RMCI Representative — 12-15-17 Date

EA Engineering Representative — 12/15/17 Date

Kirtland BFF KAFB-106239 Punchlist

Item #	Task	Action	Inspected By	Date Last Inspected	Date Completed	Notes
EA Items						
1	Install locks on the well vault.	Ordered Bilco McGard Cover Plug on 2-5-18; installed locks on 2-13-18.	KM	2/13/2018	2/13/2018	
2	Install hose barb and drain line onto KAFB-106239 vault ARV so that the ARV drains to a 5 gallon bucket.	Installed ARV drain line on 2-13-18.	KM	2/13/2018	2/13/2018	
3	Remove emergency stop button from PLC cabinet	E-stop has been disabled and tested to ensure that it does not shutdown the well.	KM	2/23/2018	2/23/2018	
4	Add locks to VFD lever, transformer meter, and any remaining unlocked panels.	Added locks to all locations including the VFD on 2-13-18.	KM	2/13/2018	2/13/2018	
5	Install privacy fence along street side of electrical equipment rack (coordination between the USACE and VA is required)	Installed on the inside of the existing VA fence on 2-28-18.	KM	2/27/2018	2/27/2018	
6	Add gravel mulch in front of the electrical pad transformer	Entire electrical pad has been graveled on 2-23-18.	KM	2/23/2018	2/23/2018	
7	Frost VFD panel glass	Ordered obstruction film for the glass on 2-5-18; installed film on 2-13-18.	KM	2/13/2018	2/13/2018	
8	Rake gravel over exposed geotextile near the electrical pad	Distributed gravel over exposed geotextile on 2-13-18.	KM	2/13/2018	2/13/2018	
Wilson Electric Items						
1	List Voltage on Pull Boxes	Listed voltage on pull boxes, low voltage on controls reroute boxes for KAFb-106228, and added panel voltage labels.	KM	2/27/2018	2/27/2018	
2	Replace hex head bolts on pull boxes with pentahead bolts and provide a pentahead socket for access	Replaced all four bolts on each high voltage pull box with pentahead bolts and obtained pentahead socket if access is needed.	KM	2/27/2018	2/27/2018	
End of Punch List						

Photographs of punch list items that have been completed are provided in the daily reports submitted on the date of item completion.

ACCIDENT PREVENTION PLAN REVIEW RECORD
Revision V

SITE: Kirtland AFB

EA Project No. 62599DM01

I have read the Accident Prevention Plan and have been briefed on anticipated site hazards, required accident prevention, and emergency response for work to be performed at this site. I agree to conform to all the requirements of this Plan.

Name	Signature	Affiliation	Date
Elon Ulalia	Elon Ulalia	EA	9/28/17
SHARMIN SULTANA	Sharmin Sultana	EA	9/28/17
Amanda M Smith	Amanda M Smith	EA	9/28/17
Stephen Busby	Stephen Busby	EA	9/28/17
JOSHUA MESSENGER	Joshua Messenger	EA	9-28-17
David L Werth	David L Werth	EA	9-28-17
Devon Jerilovic	Devon Jerilovic	EA	9-28-17
Kevin McGeorge	Kevin McGeorge	EA	9/28/17
Dustin Brown	Dustin Brown	EA	9/28/17
Carlos Montoya	Carlos Montoya	EA	9/28/17
Curtis Smith	Curtis Smith	EA	9-29-17
Lane Andress	Lane Andress	EA	9-29-17
KAYLA COPELAND	Kayla Copeland	SUNDANCE	10-3-17
McKenzie Booth	McKenzie Booth	Sundance	10/3/17
Ryan Wertman	Ryan Wertman	Sundance	10/3/17
EARL MORSE	Earl Morse	EA	10/12/17
Pete Furrow	Pete Furrow	EA	10/16/17
Robert Marley	Robert Marley	EA	10/17/17

ACCIDENT PREVENTION PLAN REVIEW RECORD

SITE: KAFB-106239 Conveyance Line Installation- Kirtland AFB BFF

EA Project No. 62599DM01

I have read the Accident Prevention Plan and have been briefed on anticipated site hazards, required accident prevention, and emergency response for work to be performed at this site. I agree to conform to all the requirements of this Plan.

Name	Signature	Affiliation	Date
Steve Moore	S=R Moore	RMCI, INC	9/22/2017
Phillip Johnson		RMCI, Inc.	9-22-17
Jerry Pennington	Jerry Penn	RmcI INC	9-25-17
ED Hyde		RMCI	9-25-17
Felipe Hernandez	Felipe H	RMCI	9/25/17
Robert BeBault	Robert BeBault	RMCI	9/25/17
Jesus Mesa	Jesus Mesa	RMCI	9/26/17
Thomas Acoste	TA	RMCI	9/27/17
MARCOS TORRES		KMCI	9/28/17
ROBERT ROMERO	Robert Romero	TLS	10-2-17
Sal Lazcano	Sal Lazcano	TLS	10-2-17
George Inyokern		RMCI	10-10-17
Manuel DeLeon	Manuel DeLeon	Bixby	10-16-17
Jasper Apachito	Jasper Apachito	Bixby	10-16-17
Dale Reames	Dale Reames	Ditch Witch	10-16-17
Lorenzo Tena	Lorenzo Tena	RMCI	10-30-17
Angel Castaneda	Angel Castaneda	RMCI	10-30-17
Quentin Romo	Quentin Romo	CWS	11/6/17

ACCIDENT PREVENTION PLAN REVIEW RECORD

SITE: KAFB-106239 Conveyance Line Installation- Kirtland AFB BFF

EA Project No. 62599DM01

I have read the Accident Prevention Plan and have been briefed on anticipated site hazards, required accident prevention, and emergency response for work to be performed at this site. I agree to conform to all the requirements of this Plan.

Name	Signature	Affiliation	Date
Britt Crooks	Britt Crooks	Wilson Electric	9-27-17
Jaime Perez	Jaime Perez	Wilson Elec	9-27-17
Michael Pearson		Netsian	3-9-18
Matthew Hall-Lapp		Netsian	3-9-18
Steven Benjamin		Netsian	3-9-18

ACCIDENT PREVENTION PLAN REVIEW RECORD

SITE: KAFB-106239 Conveyance Line Installation- Kirtland AFB BFF

EA Project No. 62599DM01

I have read the Accident Prevention Plan and have been briefed on anticipated site hazards, required accident prevention, and emergency response for work to be performed at this site. I agree to conform to all the requirements of this Plan.

Name	Signature	Affiliation	Date
Britt Crooks	Britt Crooks	Wilson Electric	9-27-17
Jaime Perez	Jaime Perez	Wilson Elec	9-27-17
Eric Lucero		Wilson Elec	9-27-17
Patrick Trujillo		Wilson Elec	9-27-17

From: SANCHEZ, AMY ELIZABETH CIV USARMY CESPA (US)
To: Jercinovic, Devon
Cc: McKeage, Kevin; Curley, Tyler
Subject: RE: Dust Permit 8828-C
Date: Thursday, February 15, 2018 10:23:56 AM

Sounds good, thanks!

-----Original Message-----
From: Jercinovic, Devon [mailto:djercinovic@eaest.com]
Sent: Thursday, February 15, 2018 10:15 AM
To: Simpler, Trent W CIV USARMY CESPA (US) <Trent.Simpler@usace.army.mil>; SANCHEZ, AMY ELIZABETH CIV USARMY CESPA (US) <Amy.E.Cordova@usace.army.mil>; Salazar, Carlos F CIV USARMY CESPA (US) <Carlos.F.Salazar@usace.army.mil>; Dreeland, Linda E CIV USARMY CESPA (US) <Linda.E.Dreeland@usace.army.mil>; Phaneuf, Mark J CIV USARMY CESPA (US) <Mark.J.Phaneuf@usace.army.mil>
Cc: McKeage, Kevin <kmckeage@eaest.com>; Curley, Tyler <tcurley@eaest.com>
Subject: [Non-DoD Source] FW: Dust Permit 8828-C

USACE TEAM,

Please see below. Based on FDC permit closure, we will get the silt fence removed possibly next week (pending subcontract modification).

Devon E. Jercinovic, PG, PMP

EA Engineering, Science, and Technology, Inc., PBC

Program Manager II

320 Gold Ave. SW, Suite 1300

Albuquerque, NM 87102

Cell: 505.401.1181

Office: 505.715.4248

Email: djercinovic@eaest.com <mailto:djercinovic@eaest.com>

Blockedwww.eaest.com <Blockedhttp://www.eaest.com/>

From: Descheneau, Troy J. [mailto:tdescheneau@cabq.gov]
Sent: Thursday, February 15, 2018 10:10 AM
To: CUEVAS, ANDRIA R CIV USAF AFGSC 377 MSG/CEIE <andria.cuevas.1@us.af.mil>
Cc: Jercinovic, Devon <djercinovic@eaest.com>
Subject: Dust Permit 8828-C

Andria,

Based on my inspection of the permitted site, 8828-C, and based on the recommendation of EA, I hereby close the fugitive dust permit.

Sincerely,

Troy Descheneau
Environmental Health Specialist II

City of Albuquerque

Environmental Health Department

Air Quality Program

1 Civic Plaza NW, 3rd Floor | Albuquerque, New Mexico 87102

Office: 505.768.1951| Cell: 505.238.1186 | Fax: 505.768.1977

tdescheneau@cabq.gov <mailto:tdescheneau@cabq.gov>

This email message and its attachments (if any) are intended for the sole use of the addressees hereof. In addition, this message and the attachments (if any) may contain information that is confidential, privileged and exempt from disclosure under applicable law. If you are not the intended recipient of this message, you are prohibited from reading, disclosing, reproducing, distributing, disseminating or otherwise using this transmission.

Delivery of this message to any person other than the intended recipient is not intended to waive any right or privilege. If you have received this message in error, please promptly notify the sender by reply email and immediately delete this message from your system.

EA Engineering, Science, & Technology, Inc., PBC
320 Gold Avenue SW, Suite 1300
Albuquerque, New Mexico 87102

Phone Call Log

Name: COA Building Permit

Date/Time:	12 December 2017 1:00 P.M.
Company/Person:	EA / Tyler Curley
Subject:	Final Inspection
Project Number:	62599DM01

Account of Conversation:

11:00 A.M. Met with Mark Saiz for final inspection. He indicated that since the vault is in the COA ROW a building permit & inspection are not required. He then had me contact Lois Blacker regarding the inspection.

1:00 P.M. Spoke with Lois Blacker, she stated the following: The structure was located within the COA ROW and thus does not require a building permit. However, since the permit was properly filed and there are records of everything she would mark down in the files that the final inspection passed.

McKeage, Kevin

From: Jercinovic, Devon
Sent: Monday, April 16, 2018 4:20 PM
To: McKeage, Kevin
Subject: FW: Kirtland BFF- COA Noise Permit Application- Installation of KAFB-106239 conveyance line

Devon E. Jercinovic, PG, PMP
EA Engineering, Science, and Technology, Inc., PBC
Program Manager II
320 Gold Ave. SW, Suite 1300
Albuquerque, NM 87102
Cell: 505.401.1181
Office: 505.715.4248
Email: djercinovic@eaest.com
www.eaest.com

From: Greenberg, Kaitlin [mailto:kgreenberg@cabq.gov]
Sent: Monday, February 26, 2018 2:41 PM
To: Jercinovic, Devon <djercinovic@eaest.com>
Cc: Lugo, Francelli <flugo@cabq.gov>
Subject: RE: Kirtland BFF- COA Noise Permit Application- Installation of KAFB-106239 conveyance line

Hi Devon,

Thanks for the information on the status of the project. Please let me know should you need another noise permit in the future.

Sincerely,

Kaitlin Greenberg, MPH
Epidemiology Specialist
CABQ Environmental Health Department
Albuquerque, NM 87103
(505) 768-2629 office
kgreenberg@cabq.gov

From: Jercinovic, Devon [mailto:djercinovic@eaest.com]
Sent: Monday, February 26, 2018 2:38 PM
To: Greenberg, Kaitlin <kgreenberg@cabq.gov>
Cc: Lugo, Francelli <flugo@cabq.gov>; McKeage, Kevin <kmckeage@eaest.com>
Subject: RE: Kirtland BFF- COA Noise Permit Application- Installation of KAFB-106239 conveyance line

Kaitlin,

I just wanted to confirm with you and officially close out the attached noise permit associated with the installation of the KAFB-106239 conveyance line.

EA team and all subcontractors demobilized all heavy equipment before the end of January (permit term).

Thank you very much for your support during this construction project.

Devon

Devon E. Jercinovic, PG, PMP
EA Engineering, Science, and Technology, Inc., PBC
Program Manager II
320 Gold Ave. SW, Suite 1300
Albuquerque, NM 87102
Cell: 505.401.1181
Office: 505.715.4248
Email: djercinovic@eaest.com
https://ddei3-0-ctp.trendmicro.com:443/wis/clicktime/v1/query?url=www.eaest.com&umid=06B94CF7-6624-5105-976C-3101103AB45D&auth=f0ebcd052f61e7a39dc93191e8a01d02608499af-c8255b5c91472633d379996eccb0354a35c45654

From: Greenberg, Kaitlin [mailto:kgreenberg@cabq.gov]
Sent: Wednesday, August 02, 2017 11:22 AM
To: Jercinovic, Devon <djercinovic@eaest.com>
Cc: Lugo, Francelli <flugo@cabq.gov>
Subject: RE: Kirtland BFF- COA Noise Permit Application- Installation of KAFB-106239 conveyance line

Hi Devon,

Please find the requested noise permit attached.

Thanks,

Kaitlin Greenberg, MPH
Epidemiology Specialist
CABQ Environmental Health Department
Albuquerque, NM 87103
(505) 768-2629 office
kgreenberg@cabq.gov

From: Jercinovic, Devon [mailto:djercinovic@eaest.com]
Sent: Wednesday, August 02, 2017 11:06 AM
To: Greenberg, Kaitlin <kgreenberg@cabq.gov>; Lugo, Francelli <flugo@cabq.gov>
Cc: McKeage, Kevin <kmckeage@eaest.com>; Curley, Tyler <tcurley@eaest.com>; Amy Sanchez <Amy.E.Sanchez@usace.army.mil>; Salazar, Carlos F CIV USARMY CESPA (US) <Carlos.F.Salazar@usace.army.mil>; Linda Dreeland <Linda.Dreeland@usace.army.mil>; Phaneuf, Mark J CIV USARMY CESPA (US) <Mark.J.Phaneuf@usace.army.mil>; Simpler, Trent W CIV USARMY CESPA (US) <Trent.Simpler@usace.army.mil>
Subject: Kirtland BFF- COA Noise Permit Application- Installation of KAFB-106239 conveyance line

Kaitlin,

EA continues to support the Kirtland BFF groundwater remediation project for the USACE and the AF. EA and our subcontractors will be installing the conveyance line from extraction well KAFB-106239 to the Groundwater Treatment System on Kirtland AFB beginning with vegetation removal in August and construction in mid-September (see attached draft schedule). The entire construction should be completed in January 2018.

I have attached the COA Noise Permit Application and the Noise Control Plan for your review. The construction notice is not completed, but does include the map of where construction activities will occur.

We will hand deliver flyers to the community as soon as approved by public affairs.

Please let me know if you have questions or require additional information.

Thank you very much. Devon

Devon E. Jercinovic, PG, PMP
EA Engineering, Science, and Technology, Inc., PBC
Program Manager II
320 Gold Ave. SW, Suite 1300
Albuquerque, NM 87102
Cell: 505.401.1181
Office: 505.715.4248
Email: djercinovic@eaest.com
https://ddei3-0-ctp.trendmicro.com:443/wis/clicktime/v1/query?url=www.eaest.com&umid=06B94CF7-6624-5105-976C-3101103AB45D&auth=f0ebcd052f61e7a39dc93191e8a01d02608499af-c8255b5c91472633d379996eccb0354a35c45654

==========
This message has been analyzed by Deep Discovery Email Inspector.

==========
This message has been analyzed by Deep Discovery Email Inspector.

NPDES FORM 3510-13		UNITED STATES ENVIRONMENTAL PROTECTION AGENCY WASHINGTON, DC 20460 NOTICE OF TERMINATION (NOT) FOR THE 2017 NPDES CONSTRUCTION PERMIT	FORM Approved OMB No. 2040-0004

Submission of this Notice of Termination constitutes notice that the operator identified in Section III of this form is no longer authorized discharge pursuant to the NPDES Construction General Permit (CGP) from the site identified in Section IV of this form. All necessary information must be included on this form. Refer to the instructions at the end of this form.

Permit Information

NPDES ID: NMR1000OU

Reason for Termination: Earth Disturbing Activities Complete, Part 8.2.1 requirements met.

Operator Information

Operator Name: RMCI, Inc.

Street/Location: 6211 Chappell RD NE

City: Albuquerque **State:** NM **Zip Code:** 87113

County or Similar Government Subdivision: BERNALILLO

Phone: 505-345-0008 **Ext.**

Email: pjohnson@rmciinc.com

Operator Point of Contact

First Name, Middle Initial, LastName: Phillip A Johnson

Project/Site Information

Project/Site Name: Kirtland Air Force Base Bulk Fuels Facility KAFB – 106239 Conveyance Line

Project/Site Address

Street/Location: 2508 Ridgecrest

City: Albuquerque **State:** NM **Zip Code:** 87108

County or Similar Government Subdivision: BERNALILLO

Certification Information

Certified By: Rex L. Davis (RMCIREX1)

Certified On: 12/08/2017 5:13 PM

I certify under penalty of law that this document and all attachments were prepared under my direction or supervision in accordance with a system designed to assure that qualified personnel properly gathered and evaluated the information submitted. Based on my inquiry of the person or persons who manage the system, or those persons directly responsible for gathering the information, the information submitted is, to the best of my knowledge and belief, true, accurate, and complete. I have no personal knowledge that the information submitted is other than true, accurate, and complete. I am aware that there are significant penalties for submitting false information, including the possibility of fine and imprisonment for knowing violations. Signing an electronic document on behalf of another person is subject to criminal, civil, administrative, or other lawful action.

RMCI INC
GENERAL CONTRACTOR
NM LICENSE No 31984

RJ 10-2-17

Foreman's Daily Diary & Huddle

Project # 1611	Project Name Ground Water Conveyance		Date 9-29-17
Project Superintendent Ed Hyde		Weather cloudy	Temperature 54°/65

Site Safety Inspection :											
Competent Person	NA	☒	Yes	☑	No	☐	Rigging/ slings checked	NA	☒	Yes	☑	No	☐
Barricades	NA	☒	Yes	☐	No	☐	Fall protection tie off	NA	☒	Yes	☐	No	☐
Excavation flagged	NA	☒	Yes	☐	No	☐	Harness check	NA	☒	Yes	☐	No	☐
Shoring	NA	☒	Yes	☐	No	☐	Work area clean	NA	☐	Yes	☒	No	☐
Ladders checked	NA	☒	Yes	☐	No	☐	Fire Extinguishers	NA	☐	Yes	☒	No	☐
Spoils 2' back	NA	☒	Yes	☐	No	☐	_____	NA	☐	Yes	☐	No	☐
Soil type A B C	NA	☒	Yes	☐	No	☐	_____	NA	☐	Yes	☐	No	☐

Crew Summary: Forman: 1 Carps: Labs : 2 Oper: 1 Sub: Pipe layers: Others:

Productivity Topics Discussed (goals, work obstacles, materials, tools, equipment, etc.):

Complete Stump removal begin setting barrier walls along road

Production Summary & Status: Completed Stump removal to Ridgecrest crossing boar
Setup barrier walls From vault to Sta 2+50 (Track out pad)

Quality Control Issues/Concerns Discussed (from either the job or customer):

Setup barrier walls Properly remove as many roots as possible when removing stumps

Safety Hazards and Topics Discussed & Observations (Note Status also):

observe utility locates while removing stumps

ATTENDANCE

Employee Name	Employee Signature	Employee Name	Employee Signature
Mark Costoles			
Robert BeBault			
Felipe Hernandez			
Jesus Mayo			

Employee: Questions/Concerns/Responses/Issues:

Completed By: Print: Jerry Patton Sign:

PJ 10-2-17

RMCI INC
GENERAL CONTRACTOR
N.M. LICENSE No 31964

Foreman's Daily Diary & Huddle

Project # 1611	Project Name Ground Water Conveyance		Date 9-28-17
Project Superintendent Ed Hyde		Weather Cloudy	Temperature 51°/67

Site Safety Inspection :

Competent Person	NA	☒	Yes	☑	No	☐	Rigging/ slings checked	NA	☒	Yes	☐	No	☐
Barricades	NA	☒	Yes	☐	No	☐	Fall protection tie off	NA	☒	Yes	☐	No	☐
Excavation flagged	NA	☒	Yes	☐	No	☐	Harness check	NA	☒	Yes	☐	No	☐
Shoring	NA	☐	Yes	☐	No	☐	Work area clean	NA	☐	Yes	☒	No	☐
Ladders checked	NA	☒	Yes	☐	No	☐	Fire Extinguishers	NA	☐	Yes	☒	No	☐
Spoils 2' back	NA	☒	Yes	☐	No	☐		NA	☐	Yes	☐	No	☐
Soil type A B C	NA	☒	Yes	☐	No	☐		NA	☐	Yes	☐	No	☐
								NA	☐	Yes	☐	No	☐

Crew Summary: Forman: 1 Carps: Labs : 2 Oper: 1 Sub: Pipe layers: Others:

Productivity Topics Discussed (goals, work obstacles, materials, tools, equipment, etc.):

Continue Stump removal

Production Summary & Status: continued Stump removal complete to Sta. 19+50 returned dump truck do not need. Cleanup conex to be able to get in and out

Quality Control Issues/Concerns Discussed (from either the job or customer):

Remove as many roots as possible when removing stumps

Safety Hazards and Topics Discussed & Observations (Note Status also):

Watch traffic obscure excavator watch overhead power

ATTENDANCE

Employee Name	Employee Signature	Employee Name	Employee Signature
Marcos Torres			
Jesus Max			
Felipe Hernandez			
Robert BeBouit			

Employee: Questions/Concerns/Responses/Issues:

Completed By: Print: Jerry Patton Sign:

RMCI INC
GENERAL CONTRACTOR
N.M. LICENSE No. 31964

RJ 10-2-17

Foreman's Daily Diary & Huddle

Project # 1611	Project Name Ground Water Conveyance		Date 9-27-17
Project Superintendent Ed Hyde		Weather Cloudy	Temperature 56°/64°

Site Safety Inspection :

Competent Person	NA	☒	Yes	☒	No	☐	Rigging/ slings checked	NA	☒	Yes	☐	No ☐
Barricades	NA	☒	Yes	☐	No	☐	Fall protection tie off	NA	☒	Yes	☐	No ☐
Excavation flagged	NA	☒	Yes	☐	No	☐	Harness check	NA	☒	Yes	☐	No ☐
Shoring	NA	☒	Yes	☐	No	☐	Work area clean	NA	☐	Yes	☒	No ☐
Ladders checked	NA	☒	Yes	☐	No	☐	Fire Extinguishers	NA	☐	Yes	☒	No ☐
Spoils 2' back	NA	☒	Yes	☐	No	☐		NA	☐	Yes	☐	No ☐
Soil type A B C	NA	☒	Yes	☐	No	☐		NA	☐	Yes	☐	No ☐
								NA	☐	Yes	☐	No ☐

Crew Summary: Forman: 1 Carps: Labs: 2 Oper: 1 Sub: Pipe layers: Others:

Productivity Topics Discussed (goals, work obstacles, materials, tools, equipment, etc.):

Finish Yard Setup Begin Stump removal

Production Summary & Status:

Completed barrier wall setup in yard to protect epuipment
Began pulling tree stumps and made removal to Sta. 9+00

Quality Control Issues/Concerns Discussed (from either the job or customer):

Watch roots in areas around power line

Safety Hazards and Topics Discussed & Observations (Note Status also):

Observe locates and watch for roots around same

ATTENDANCE

Employee Name	Employee Signature	Employee Name	Employee Signature
Robert BeBault	Robert BeBault		
Felipe Hernandez	Felipe H		
Jesus Moya	Jesus Moya		

Employee: Questions/Concerns/Responses/Issues:

Completed By: Print: Jerry Patton Sign: Jerry Patton

PB 10-247

RMCI INC
GENERAL CONTRACTOR
NM LICENSE No. 31964

Foreman's Daily Diary & Huddle

Project # 1611	Project Name Ground water conveyance		Date 9-26-17
Project Superintendent Ed Hojde		Weather Partly Cloudy	Temperature 55° / 75°

Site Safety Inspection :						Rigging/ slings checked	NA ☑	Yes ☐	No ☐
Competent Person	NA ☑	Yes ☑	No ☐			Fall protection tie off	NA ☑	Yes ☐	No ☐
Barricades	NA ☑	Yes ☐	No ☐			Harness check	NA ☑	Yes ☐	No ☐
Excavation flagged	NA ☑	Yes ☐	No ☐			Work area clean	NA ☐	Yes ☑	No ☐
Shoring	NA ☑	Yes ☐	No ☐			Fire Extinguishers	NA ☐	Yes ☑	No ☐
Ladders checked	NA ☑	Yes ☐	No ☐				NA ☐	Yes ☐	No ☐
Spoils 2' back	NA ☑	Yes ☐	No ☐				NA ☐	Yes ☐	No ☐
Soil type A B C	NA ☑	Yes ☐	No ☐				NA ☐	Yes ☐	No ☐

Crew Summary: Forman: 1 Carps: Labs: 2 Oper: 1 Sub: Pipe layers: Others:

Productivity Topics Discussed (goals, work obstacles, materials, tools, equipment, etc.):

Continue mob

Production Summary & Status:

Recieved 48 barrier walls From Builders Supply Conex, Roller bracket from yard and water truck. Worked on yard Setup

Hrs 7:00 to 3:30 = 8

Quality Control Issues/Concerns Discussed (from either the job or customer):

Set up yard to protect tools and Equipment

Safety Hazards and Topics Discussed & Observations (Note Status also):

Stay out From under loads watch traffic when near street

ATTENDANCE

Employee Name	Employee Signature	Employee Name	Employee Signature
Felipe Hernandez	Felipe Hernandez		
Jesus Mora			
Robert Bebault	Robert Bebault		

Employee: Questions/Concerns/Responses/Issues:

Completed By: Print: Jerry Purton Sign: Jerry Purton

RMCI INC
GENERAL CONTRACTOR
N.M. LICENSE No. 31964

BJ 10-2-17

Foreman's Daily Diary & Huddle

Project # 1611	Project Name Ground Water Conveyance		Date 9-25-17
Project Superintendent Ed Hyde		Weather Clear	Temperature 78°/51°

Site Safety Inspection :

Competent Person	NA	☒	Yes	☑	No	☐	Rigging/ slings checked	NA	☒	Yes	☐	No	☐
Barricades	NA	☒	Yes	☐	No	☐	Fall protection tie off	NA	☒	Yes	☐	No	☐
Excavation flagged	NA	☒	Yes	☐	No	☐	Harness check	NA	☒	Yes	☐	No	☐
Shoring	NA	☒	Yes	☐	No	☐	Work area clean	NA	☐	Yes	☒	No	☐
Ladders checked	NA	☒	Yes	☐	No	☐	Fire Extinguishers	NA	☐	Yes	☒	No	☐
Spoils 2' back	NA	☒	Yes	☐	No	☐		NA	☐	Yes	☐	No	☐
Soil type A B C	NA	☒	Yes	☐	No	☐		NA	☐	Yes	☐	No	☐
								NA	☐	Yes	☐	No	☐

Crew Summary: Forman: 1 Carps: ~~3~~ Labs : 2 Oper: Sub: Pipe layers: Others:

Productivity Topics Discussed (goals, work obstacles, materials, tools, equipment, etc.):

Mobilization on site

Production Summary & Status:

Recieved Lw120 Loader 200 excavator, 10 8X12' plates, 12 barrier walls From yard and 10 barriers from material Supply. unloaded all materials in work zone and Locked up Excavator 100% parked loader in office yard and locked it up 100%

Hours 7:00 Am to 5:00 Pm = 9.5

Quality Control Issues/Concerns Discussed (from either the job or customer):

Set up to protect Tools and equipment

Safety Hazards and Topics Discussed & Observations (Note Status also):

Stay out from under loads

ATTENDANCE

Employee Name	Employee Signature	Employee Name	Employee Signature
Felipe Hernandez	Felipe Hernandez		
Robert Bellmont	Robert Bellmont		

Employee: Questions/Concerns/Responses/Issues:

Completed By: Print: Jerry Portton Sign: Jerry Portton

RMCI INC
GENERAL CONTRACTOR
NM LICENSE No 31964

By 10/4/17

Foreman's Daily Diary & Huddle

Project # 1611	Project Name Ground Water Conveyance		Date 10-6-17
Project Superintendent Ed Hyde		Weather Cloudy / Clear PM	Temperature 62°/77°

Site Safety Inspection :						Rigging/ slings checked	NA	☒	Yes	☐	No	☐
Competent Person	NA	☒	Yes	☐	No	☐	Fall protection tie off	NA	☒	Yes	☐	No	☐
Barricades	NA	☒	Yes	☐	No	☐	Harness check	NA	☒	Yes	☐	No	☐
Excavation flagged	NA	☒	Yes	☐	No	☐	Work area clean	NA	☐	Yes	☒	No	☐
Shoring	NA	☒	Yes	☐	No	☐	Fire Extinguishers	NA	☐	Yes	☒	No	☐
Ladders checked	NA	☒	Yes	☐	No	☐		NA	☐	Yes	☐	No	☐
Spoils 2' back	NA	☒	Yes	☐	No	☐		NA	☐	Yes	☐	No	☐
Soil type A B C	NA	☒	Yes	☐	No	☐		NA	☐	Yes	☐	No	☐

Crew Summary: Forman: 1 Carps: Labs : 3 Oper: 1 Sub: Pipe layers: Others:

Productivity Topics Discussed (goals, work obstacles, materials, tools, equipment, etc.):

Continue welding small diameter conduit at bores

Production Summary & Status: Completed all small diameter conduit for next 2 bores
Met with Tyler and Kevin with Ed and Phillip about power line running with water line at our tie-in point which does not show on plans and will interfere with vault placement

Quality Control Issues/Concerns Discussed (from either the job or customer):

make proper welds and proper lengths for bores

Safety Hazards and Topics Discussed & Observations (Note Status also):

watch pinche points and Heater while welding

ATTENDANCE

Employee Name	Employee Signature	Employee Name	Employee Signature
Felipe Hernandez	Felipe Hernandez		
Marcos Tovar			
Robert BeBout			
Jesus Moya			

Employee: Questions/Concerns/Responses/Issues:

Completed By: Print: Jerry Patton Sign:

RMCI INC
GENERAL CONTRACTOR
N.M. LICENSE No. 31964

10/4/17

Foreman's Daily Diary & Huddle

Project # 1611	Project Name Groundwater Conveyance		Date 10-5-17
Project Superintendent Ed Hyde		Weather cloudy	Temperature 62°/ 74°

Site Safety Inspection :						Rigging/ slings checked	NA ☒	Yes ☐	No ☐
Competent Person	NA ☒	Yes ☐	No ☐			Fall protection tie off	NA ☒	Yes ☐	No ☐
Barricades	NA ☒	Yes ☐	No ☐			Harness check	NA ☒	Yes ☐	No ☐
Excavation flagged	NA ☒	Yes ☐	No ☐			Work area clean	NA ☐	Yes ☒	No ☐
Shoring	NA ☒	Yes ☐	No ☐			Fire Extinguishers	NA ☐	Yes ☒	No ☐
Ladders checked	NA ☒	Yes ☐	No ☐				NA ☐	Yes ☐	No ☐
Spoils 2' back	NA ☒	Yes ☐	No ☐				NA ☐	Yes ☐	No ☐
Soil type A B C	NA ☒	Yes ☐	No ☐				NA ☐	Yes ☐	No ☐

Crew Summary: Forman: 1 Carps: Labs: 3 Oper: 1 Sub: Pipe layers: Others:

Productivity Topics Discussed (goals, work obstacles, materials, tools, equipment, etc.):

Do test weld and Air test For Army Corp. Lay out pipe for Bores on north side of Ridge crest.

Production Summary & Status: Completed and pussed Pressure test for Army Corp. Loaded stumps out. Placed needed pipe at all bore sites including on base using Monty to haul pipe after unloading backhoe. NO pipe welding due to length of time used to do pipe test

Quality Control Issues/Concerns Discussed (from either the job or customer):

weld and preform 5# air test weld properly

Safety Hazards and Topics Discussed & Observations (Note Status also):

Only required people in area For test. Stay out #From under Loads

ATTENDANCE

Employee Name	Employee Signature	Employee Name	Employee Signature
Robert DeBault			
MARCOS TOVAR			
Jesus Hernandez			
Felipe Hernandez			

Employee: Questions/Concerns/Responses/Issues:

Completed By: Print: Sign:

RMCI INC
GENERAL CONTRACTOR
N.M. LICENSE No. 31964

JJ 10/9/17

Foreman's Daily Diary & Huddle

Project # 1611	Project Name Ground water Conveyance	Date 10-4-17
Project Superintendent Ed Hyde	Weather Cloudy	Temperature 67°/81°

Site Safety Inspection :				Rigging/ slings checked	NA	Yes	No
Competent Person	NA ☑	Yes ☐	No ☐	Fall protection tie off	NA ☑	Yes ☐	No ☐
Barricades	NA ☑	Yes ☐	No ☐	Harness check	NA ☑	Yes ☐	No ☐
Excavation flagged	NA ☑	Yes ☐	No ☐	Work area clean	NA ☐	Yes ☑	No ☐
Shoring	NA ☑	Yes ☐	No ☐	Fire Extinguishers	NA ☐	Yes ☑	No ☐
Ladders checked	NA ☑	Yes ☐	No ☐		NA ☐	Yes ☐	No ☐
Spoils 2' back	NA ☑	Yes ☐	No ☐		NA ☐	Yes ☐	No ☐
Soil type A B C	NA ☑	Yes ☐	No ☐		NA ☐	Yes ☐	No ☐

Crew Summary: Forman: 1 Carps: Labs : 3 Oper: 1 Sub: Pipe layers: Others:

Productivity Topics Discussed (goals, work obstacles, materials, tools, equipment, etc.):

Weld pipe at Ridgecrest Crossing move pipe For Bores on Northside of Ridgecrest For bores

Production Summary & Status: Completed welding of pipe For Ridgecrest crossing 120' of 4x6 containment pipe 100' of 4" conduit, 100' of 2" Conduit. Army Corp observed weld and AMY voiced concerns because slight imperfection appears in bead after welding. She wants test weld and pressure test to insure pipe will not leak, we cannot weld until test is Completed. will do test first thing tomorrow morning.

Quality Control Issues/Concerns Discussed (from either the job or customer):

Weld pipe properly and to proper length For bores

Safety Hazards and Topics Discussed & Observations (Note Status also):

watch pinch points and heater on welding machine

ATTENDANCE

Employee Name	Employee Signature	Employee Name	Employee Signature
MARCS Evans			
Robert BeBault			
Jesus Maya			

Employee: Questions/Concerns/Responses/Issues:

Completed By: Print: Jerry Pertion Sign:

RMCI INC
GENERAL CONTRACTOR
NM LICENSE No. 31964

BJ 10/9/17

Foreman's Daily Diary & Huddle

Project # 1611	Project Name Ground water Conveyance		Date 10-3-17
Project Superintendent Ed Hyde		Weather clear	Temperature 53°/81°

Site Safety Inspection :						Rigging/ slings checked					
Competent Person	NA ☑	Yes ☐	No ☐			Fall protection tie off	NA ☑	Yes ☐	No ☐		
Barricades	NA ☑	Yes ☐	No ☐			Harness check	NA ☑	Yes ☐	No ☐		
Excavation flagged	NA ☑	Yes ☐	No ☐			Work area clean	NA ☐	Yes ☑	No ☐		
Shoring	NA ☑	Yes ☐	No ☐			Fire Extinguishers	NA ☐	Yes ☑	No ☐		
Ladders checked	NA ☑	Yes ☐	No ☐				NA ☐	Yes ☐	No ☐		
Spoils 2' back	NA ☑	Yes ☐	No ☐				NA ☐	Yes ☐	No ☐		
Soil type A B C	NA ☑	Yes ☐	No ☐				NA ☐	Yes ☐	No ☐		

Crew Summary: Forman: 1 Carps: Labs : 3 Oper: 1 Sub: Pipe layers: Others:

Productivity Topics Discussed (goals, work obstacles, materials, tools, equipment, etc.):

Begin welding pipe For bores layout pipe at eastern bores

Production Summary & Status: welded 120' pipe together For Pull under SAS line at Sta 5435 moved pipe to to bore under Ridge crest to prepare to weld tomorrow. EA had dump truck on site to haul Stumps off-site loaded truck 3 times takes 2.5 hours per trip

Quality Control Issues/Concerns Discussed (from either the job or customer):

weld ~~bores~~ pipes correctly and proper length

Safety Hazards and Topics Discussed & Observations (Note Status also):

watch pinch points on welding machine use cave with Heater

ATTENDANCE

Employee Name	Employee Signature	Employee Name	Employee Signature
MARCOS T			
Jesus Moya			
Robert Bobbitt			
Felipe Hernandez			

Employee: Questions/Concerns/Responses/Issues:

Completed By: Print: Jerry Patton Sign:

RMCI INC
GENERAL CONTRACTOR
NM LICENSE No 31954

By 10/2/17

Foreman's Daily Diary & Huddle

Project # 1611	Project Name Groundwater Conveyance		Date 10-2-17
Project Superintendent Ed Hyde		Weather Clear	Temperature 58° / 80°

Site Safety Inspection :											
Competent Person	NA	☒	Yes	☐	No	☐	Rigging/ slings checked	NA	☒	Yes	☐	No	☐
Barricades	NA	☒	Yes	☐	No	☐	Fall protection tie off	NA	☒	Yes	☐	No	☐
Excavation flagged	NA	☒	Yes	☐	No	☐	Harness check	NA	☒	Yes	☐	No	☐
Shoring	NA	☒	Yes	☐	No	☐	Work area clean	NA	☐	Yes	☒	No	☐
Ladders checked	NA	☒	Yes	☐	No	☐	Fire Extinguishers	NA	☐	Yes	☒	No	☐
Spoils 2' back	NA	☒	Yes	☐	No	☐		NA	☐	Yes	☐	No	☐
Soil type A B C	NA	☒	Yes	☐	No	☐		NA	☐	Yes	☐	No	☐

Crew Summary: Forman: 1 Carps: Labs : 3 Oper: 1 Sub: Pipe layers: Others:

Productivity Topics Discussed (goals, work obstacles, materials, tools, equipment, etc.):

Test weld for Corp. Set barrier walls on east side of road

Production Summary & Status: Completed test weld for army corp and cut test strips EA Do bend test. Met with Bixby ~~dnd~~ was decided we will bore under Sewer line. Moved remaining barrier walls to east side of access road to prep for bore placed 3 joints of Pipe to weld for this bore. Also laid out 5 Joints when we begin to dig trench

Quality Control Issues/Concerns Discussed (from either the job or customer):

Set barrier walls correctly

Safety Hazards and Topics Discussed & Observations (Note Status also):

Stay out from under walls and watch pinch points

ATTENDANCE

Employee Name	Employee Signature	Employee Name	Employee Signature
Marcos Torres			
Robert BeBault			
Jesus Mayo			
Felipe Herrera			

Employee: Questions/Concerns/Responses/Issues:

Completed By: Print: Jerry Patton Sign:

RMCI UNI
GENERAL CONTRACTOR
N.M. LICENSE No 31964

PJ 10-17-17

Foreman's Daily Diary & Huddle

Project # 1611	Project Name Groundwater Conveyance		Date 10-13-17
Project Superintendent Ed Hyde		Weather Cloudy	Temperature 59°/78°

Site Safety Inspection :					Rigging/ slings checked	NA	☑	Yes	☐	No	☐
Competent Person	NA	☑	Yes	☐	No	☐	Fall protection tie off	NA	☑	Yes	☐	No	☐
Barricades	NA	☑	Yes	☐	No	☐	Harness check	NA	☑	Yes	☐	No	☐
Excavation flagged	NA	☑	Yes	☐	No	☐	Work area clean	NA	☐	Yes	☑	No	☐
Shoring	NA	☑	Yes	☐	No	☐	Fire Extinguishers	NA	☐	Yes	☑	No	☐
Ladders checked	NA	☑	Yes	☐	No	☐		NA	☐	Yes	☐	No	☐
Spoils 2' back	NA	☑	Yes	☐	No	☐		NA	☐	Yes	☐	No	☐
Soil type A B C	NA	☑	Yes	☐	No	☐		NA	☐	Yes	☐	No	☐

Crew Summary: Forman: 1 Carps: Labs: 3 Oper: 1 Sub: Pipe layers: Others:

Productivity Topics Discussed (goals, work obstacles, materials, tools, equipment, etc.):

Tie rebar, place chamfer and pour Electric Pad

Production Summary & Status: Placed rebar and chamfer for pour. Duke City no show until 10:30 AM after I placed call to remind them should be here 9:00 they said they cancelled in house because of lack of design mix but Ed had E-mailed Miles spec and it apparently got misplaced. But after my call mud arrived in less than one hour. Made pour and finished surface gave pad brush finish with Kevin's approval.

Quality Control Issues/Concerns Discussed (from either the job or customer):

Finish concrete properly to grade

Safety Hazards and Topics Discussed & Observations (Note Status also):

Safety glasses to prevent concrete splash in your eyes

ATTENDANCE

Employee Name	Employee Signature	Employee Name	Employee Signature
Felipe Hernandez	Felipe Hernandez		
Robert Babbitt			
MARCOS TORRES			
JESUS Mayo			

Employee: Questions/Concerns/Responses/Issues:

Completed By: Print: Jerry Patton Sign:

RMCI INC
GENERAL CONTRACTOR
N.M. LICENSE No. 31964

PM 10-17-17

Foreman's Daily Diary & Huddle

Project # 1611	Project Name Groundwater Conveyance		Date 10-11-17
Project Superintendent Ed Hyde		Weather Clear	Temperature 41° / 72°

Site Safety Inspection :					Rigging/ slings checked	NA	☒	Yes	☐	No	☐
Competent Person	NA	☒	Yes	☐	No ☐	Fall protection tie off	NA	☒	Yes	☐	No	☐
Barricades	NA	☒	Yes	☐	No ☐	Harness check	NA	☒	Yes	☐	No	☐
Excavation flagged	NA	☒	Yes	☐	No ☐	Work area clean	NA	☐	Yes	☒	No	☐
Shoring	NA	☒	Yes	☐	No ☐	Fire Extinguishers	NA	☐	Yes	☒	No	☐
Ladders checked	NA	☒	Yes	☐	No ☐		NA	☐	Yes	☐	No	☐
Spoils 2' back	NA	☒	Yes	☐	No ☐		NA	☐	Yes	☐	No	☐
Soil type A B C	NA	☒	Yes	☐	No ☐		NA	☐	Yes	☐	No	☐

Crew Summary: Forman: 1 Carps: Labs: 4 Oper: 1 Sub: Pipe layers: Others:

Productivity Topics Discussed (goals, work obstacles, materials, tools, equipment, etc.):

Get Pad backfilled and formed place rebar weld pipe for Bore #3

Production Summary & Status: Not able to complete backfill on pad due to Wilson Electric not completing conduit install till late in the day. Dug out conduit trench to vault but no conduit installed Fenced area around this trench. Welded 200' 4x8 pipe for bore #3. Laid out bore pits to prepare for Bixby arrival tomorrow.

Quality Control Issues/Concerns Discussed (from either the job or customer):

Proper depth of conduit trench proper compaction on backfill
Proper length of pipe for bore

Safety Hazards and Topics Discussed & Observations (Note Status also):

watch pinch points on welding machine. Spotter to watch overhead power in digging area

ATTENDANCE

Employee Name	Employee Signature	Employee Name	Employee Signature
MARCOS T.			
Robert BeBout	Robert BeBout		
George Fragoso			
Felipe Hernandez	Felipe Hernandez		
Jesus Moya	Jmoya		

Employee: Questions/Concerns/Responses/Issues:

Completed By: Print: Sign:

RMCI INC
GENERAL CONTRACTOR
NM LICENSE No 31964

RJ 10-17-17

Foreman's Daily Diary & Huddle

Project # 1611	Project Name Groundwater Conveyance		Date 10-10-17
Project Superintendent Ed Hyde		Weather Clear	Temperature 39°/65°

Site Safety Inspection :					Rigging/ slings checked	NA	☑	Yes	☐	No	☐
Competent Person	NA	☑	Yes	☐	No ☐	Fall protection tie off	NA	☑	Yes	☐	No	☐
Barricades	NA	☑	Yes	☐	No ☐	Harness check	NA	☑	Yes	☐	No	☐
Excavation flagged	NA	☑	Yes	☐	No ☐	Work area clean	NA	☐	Yes	☑	No	☐
Shoring	NA	☑	Yes	☐	No ☐	Fire Extinguishers	NA	☐	Yes	☑	No	☐
Ladders checked	NA	☑	Yes	☐	No ☐		NA	☐	Yes	☐	No	☐
Spoils 2' back	NA	☑	Yes	☐	No ☐		NA	☐	Yes	☐	No	☐
Soil type A B C	NA	☑	Yes	☐	No ☐		NA	☐	Yes	☐	No	☐

Crew Summary: Forman: 1 Carps: Labs : 4 Oper: 1 Sub: Pipe layers: Others:

Productivity Topics Discussed (goals, work obstacles, materials, tools, equipment, etc.):

Layout and remove gravel at Electric Pad
Continue pipe welding For bores

Production Summary & Status: Work on Electric pad dug out conduit trench and pad Wilson no show to place conduits Welded 200' of pipe For Bore #4 need to weld 200' For #3 tomorrow

Quality Control Issues/Concerns Discussed (from either the job or customer):

Weld proper Lengths For bores Layout pad properly
Keep gravel clean

Safety Hazards and Topics Discussed & Observations (Note Status also):

Watch pinch points, blades and heater on machine

ATTENDANCE

Employee Name	Employee Signature	Employee Name	Employee Signature
Robert Bobbitt			
George Ingram			
Marcos T.			
Felipe Hernandez			
Jesus Mayo			

Employee: Questions/Concerns/Responses/Issues:

Completed By: Print: Jerry Patton Sign:

RMCI INC
GENERAL CONTRACTOR
N.M. LICENSE No. 31964

(R) 10-24-17

Foreman's Daily Diary & Huddle

Project # 1611	Project Name Groundwater Conveyance		Date 10-20-17
Project Superintendent Ed Hyde		Weather Clear	Temperature 53°/71°

Site Safety Inspection :						Rigging/ slings checked	NA	☒	Yes	☐	No	☐
Competent Person	NA	☒	Yes	☐	No	☐	Fall protection tie off	NA	☒	Yes	☐	No	☐
Barricades	NA	☒	Yes	☐	No	☐	Harness check	NA	☒	Yes	☐	No	☐
Excavation flagged	NA	☒	Yes	☐	No	☐	Work area clean	NA	☐	Yes	☒	No	☐
Shoring	NA	☒	Yes	☐	No	☐	Fire Extinguishers	NA	☐	Yes	☒	No	☐
Ladders checked	NA	☒	Yes	☐	No	☐		NA	☐	Yes	☐	No	☐
Spoils 2' back	NA	☒	Yes	☒	No	☐		NA	☐	Yes	☐	No	☐
Soil type A B C	NA	☒	Yes	☒	No	☐		NA	☐	Yes	☐	No	☐

Crew Summary: Forman: 1 Carps: Labs: 3 Oper: 1 Sub: Pipe layers: Others:

Productivity Topics Discussed (goals, work obstacles, materials, tools, equipment, etc.):

Backfill trench

Production Summary & Status: Completed Back Fill From Sta 4+25 to Sta ~~3+75~~ 3+25 Tyler Told me at 10:00 Am Needed to plate or Barrier wall all Bore pits moved 7 Plates down to pits and covered them as well as we could then refenced all pits. Completed back Fill ~~on~~ across road plus and Acid injection 60ft unable to back fill electric trench due to having to set plates on bores.

Quality Control Issues/Concerns Discussed (from either the job or customer):

Proper lifts and compaction on Backfill material

Safety Hazards and Topics Discussed & Observations (Note Status also):

watch traffic and Pedestrians Proper ditch Safety

ATTENDANCE

Employee Name	Employee Signature	Employee Name	Employee Signature
MARCOS Torres			
Robert Bedard	Robert Bedard		
Felipe [illegible]	[illegible]		
Jesus Mayo	Jesus Mayo		

Employee: Questions/Concerns/Responses/Issues:

Completed By: Print: Jerry Penton Sign: Jerry Penton

RMCI INC
GENERAL CONTRACTOR
N.M. LICENSE No 31964

PJ 10-24-17

Foreman's Daily Diary & Huddle

Project # 1611	Project Name Ground water Conveyance	Date 10-19-17
Project Superintendent Ed Hyde	Weather Cloudy	Temperature 50° / 75°

Site Safety Inspection :						Rigging/ slings checked	NA	☒	Yes	☐	No	☐
Competent Person	NA	☒	Yes	☐	No	☐	Fall protection tie off	NA	☒	Yes	☐	No	☐
Barricades	NA	☒	Yes	☐	No	☐	Harness check	NA	☒	Yes	☐	No	☐
Excavation flagged	NA	☒	Yes	☐	No	☐	Work area clean	NA	☐	Yes	☒	No	☐
Shoring	NA	☒	Yes	☐	No	☐	Fire Extinguishers	NA	☐	Yes	☒	No	☐
Ladders checked	NA	☒	Yes	☐	No	☐		NA	☐	Yes	☐	No	☐
Spoils 2' back	NA	☒	Yes	☐	No	☐		NA	☐	Yes	☐	No	☐
Soil type A B C	NA	☒	Yes	☐	No	☐		NA	☐	Yes	☐	No	☐

Crew Summary: Forman: 1 Carps: Labs : 3 Oper: 1 Sub: Pipe layers: Others:

Productivity Topics Discussed (goals, work obstacles, materials, tools, equipment, etc.):

Back Fill across entrance road Continue welding pipe to vault

Production Summary & Status: Completed Back Fill From bore to Edge of Sta 5+80 Sta 4+25
plates on Road. Welded Pull heads For Bixby For Crossing Kentucky also moved pipe to line up with bore. Bixby complete Bore and Pull pipe From Sta 22+00 to Sta 23+45. Dug 160' OF trench For Wilson Electric to Run conduit From transformer pad to our trench and Set pull box For them then supplied Flaggers For them to pour cap on conduits. After Bore Pull welded pull heads for next Bore From Kentucky to Louisana

Quality Control Issues/Concerns Discussed (from either the job or customer):

Proper Compaction and Lifts

Safety Hazards and Topics Discussed & Observations (Note Status also):

Pedestrians and Traffic Keep your eyes open
Watch For Army Corp people in work Area

ATTENDANCE

Employee Name	Employee Signature	Employee Name	Employee Signature
Marcos Tovar			
Felipe N	Felipe N		
Robert Baldwin			
Jesus Moya	Moya		

Employee: Questions/Concerns/Responses/Issues:

Completed By: Print: Jerry Patton Sign:

RMCI INC
GENERAL CONTRACTOR
N.M. LICENSE No. 31964

D 10.24.17

Foreman's Daily Diary & Huddle

Project # 1611	Project Name Ground water Conveyance		Date 10-18-17
Project Superintendent Ed Hyde		Weather Clear	Temperature 47°

Site Safety Inspection :					Rigging/ slings checked	NA	☑	Yes	☐	No	☐
Competent Person	NA	☑	Yes	☐	No ☐	Fall protection tie off	NA	☑	Yes	☐	No	☐
Barricades	NA	☑	Yes	☐	No ☐	Harness check	NA	☑	Yes	☐	No	☐
Excavation flagged	NA	☑	Yes	☐	No ☐	Work area clean	NA	☐	Yes	☑	No	☐
Shoring	NA	☑	Yes	☐	No ☐	Fire Extinguishers	NA	☐	Yes	☑	No	☐
Ladders checked	NA	☑	Yes	☐	No ☐		NA	☐	Yes	☐	No	☐
Spoils 2' back	NA	☑	Yes	☐	No ☐		NA	☐	Yes	☐	No	☐
Soil type A B C	NA	☑	Yes	☐	No ☐		NA	☐	Yes	☐	No	☐

Crew Summary: Forman: 1 Carps: Labs : 3 Oper: 1 Sub: Pipe layers: Others:

Productivity Topics Discussed (goals, work obstacles, materials, tools, equipment, etc.):

Dig out road crossing and Lay pipe in trench Wilson place - Conduit
Dig bore pits for Bixby to cross Ridge Crest

Production Summary & Status: Bixby Complete Bore under Ridgecrest and Pull pipe Begin drilling next Bore under Kentucky but not complete. Dig trench From Station 5+00 to 3+00 place pipe in trench after adding 80 Ft of pipe. Wilson Elect. placed conduit in same trench powred cap on conduit but only capped 120' of conduit will complete powr to morrow. Will backFill tomorrow From bore at Sta 5+00 to Sta 3+00

Quality Control Issues/Concerns Discussed (from either the job or customer):

Safety Hazards and Topics Discussed & Observations (Note Status also):

ATTENDANCE

Employee Name	Employee Signature	Employee Name	Employee Signature
Jesus Moya	Moya		
Robert Bebout	Robert Bebout		
Marcos Torres			
Felipe	felipe		

Employee: Questions/Concerns/Responses/Issues:

Completed By: Print: Jerry Patton Sign: Jerry Patton

RMCI INC
GENERAL CONTRACTOR
N.M. LICENSE No. 31954

BJ 10-24-17

Foreman's Daily Diary & Huddle

Project # 1611	Project Name Ground water Conveyance	Date 10-17-17
Project Superintendent Ed Hyde	Weather Clear	Temperature 50°/75°

Site Safety Inspection :					Rigging/ slings checked	NA ☐	Yes ☐	No ☐
Competent Person	NA ☒	Yes ☐	No ☐		Fall protection tie off	NA ☐	Yes ☐	No ☐
Barricades	NA ☒	Yes ☐	No ☐		Harness check	NA ☐	Yes ☐	No ☐
Excavation flagged	NA ☒	Yes ☐	No ☐		Work area clean	NA ☐	Yes ☐	No ☐
Shoring	NA ☒	Yes ☐	No ☐		Fire Extinguishers	NA ☐	Yes ☐	No ☐
Ladders checked	NA ☒	Yes ☐	No ☐			NA ☐	Yes ☐	No ☐
Spoils 2' back	NA ☒	Yes ☐	No ☐			NA ☐	Yes ☐	No ☐
Soil type A B C	NA ☒	Yes ☐	No ☐			NA ☐	Yes ☐	No ☐

Crew Summary: Forman: 1 Carps: Labs : 3 Oper: 1 Sub: Pipe layers: Others:

Productivity Topics Discussed (goals, work obstacles, materials, tools, equipment, etc.):

Dig out bore pits and weld pipe

Production Summary & Status: Wait on Bixby to remove rest of drilling mud out of bore pits until 10:00 Am Begin digging west side at 8:30 Am to separate pipes to begin welding. Weld 120' of pipe to cross entrance road. Pull cable broke in last weld had to cut pipe fish out rope and reweld. Lost 1hr.

Quality Control Issues/Concerns Discussed (from either the job or customer):

Weld Pipe properly Dig trench proper depth

Safety Hazards and Topics Discussed & Observations (Note Status also):

watch Pinch points on welder

ATTENDANCE

Employee Name	Employee Signature	Employee Name	Employee Signature
Robert BeBout			
Hector Olivo			
Felipe Leal			
Jesus Moya			

Employee: Questions/Concerns/Responses/Issues:

Completed By: Print: Jerry Patton Sign:

RMCI INC
GENERAL CONTRACTOR
NM LICENSE No 31964

PD 10-24-17

Foreman's Daily Diary & Huddle

Project # 1611	Project Name Ground water Conveyance		Date 10-16-17
Project Superintendent Ed Hyde		Weather Clear	Temperature 40°/720

Site Safety Inspection :					Rigging/ slings checked	NA	☒	Yes	☐	No	☐
Competent Person	NA	☒	Yes	☐	No	☐	Fall protection tie off	NA	☒	Yes	☐	No	☐
Barricades	NA	☒	Yes	☐	No	☐	Harness check	NA	☒	Yes	☐	No	☐
Excavation flagged	NA	☒	Yes	☐	No	☐	Work area clean	NA	☐	Yes	☒	No	☐
Shoring	NA	☒	Yes	☐	No	☐	Fire Extinguishers	NA	☐	Yes	☒	No	☐
Ladders checked	NA	☒	Yes	☐	No	☐		NA	☐	Yes	☐	No	☐
Spoils 2' back	NA	☒	Yes	☐	No	☐		NA	☐	Yes	☐	No	☐
Soil type A B C	NA	☒	Yes	☐	No	☐		NA	☐	Yes	☐	No	☐

Crew Summary: Forman: 1 Carps: Labs: 3 Oper: 1 Sub: Pipe layers: Others:

Productivity Topics Discussed (goals, work obstacles, materials, tools, equipment, etc.):

Dig Pits For bore Strip Forms From pad Bore under Sewer

Production Summary & Status: Bixby arrive 7:00 Am For bore dig pits For Them Strip Forms and regrade gravel. Bixby have Training on new Locator machine to track depth and direction of Bore. Begin drilling bore at 9:45 Am complete bore and pull our pipe and Wilson conduits at 3:00 Pm Boring delayed 1hr 15 min due to bomb scare across Street From work area Police made us Stop and move back.

Quality Control Issues/Concerns Discussed (from either the job or customer):

clean up pad area replace Gravel Proper depth of Bore

Safety Hazards and Topics Discussed & Observations (Note Status also):

Watch Pinch points and Rotary of bore machine

ATTENDANCE

Employee Name	Employee Signature	Employee Name	Employee Signature
Felipe Hernandez	Felipe Hernandez		
Jesus Moya	[illegible]		
Michael Moore	[illegible]		
Robert Bebout	[illegible]		

Employee: Questions/Concerns/Responses/Issues:

Completed By: Print: Jerry Patton Sign: [signature]

RMCI INC
GENERAL CONTRACTOR
NM LICENSE No 31964

pg 10/30/17

Foreman's Daily Diary & Huddle

Project # 1611	Project Name Ground water Conveyance		Date 10-27-17
Project Superintendent Ed Hyde		Weather Clear / windy	Temperature 40° / 55°

Site Safety Inspection :						Rigging/ slings checked	NA ☑	Yes ☐	No ☐
Competent Person	NA ☐	Yes ☑	No ☐			Fall protection tie off	NA ☑	Yes ☐	No ☐
Barricades	NA ☐	Yes ☑	No ☐			Harness check	NA ☑	Yes ☐	No ☐
Excavation flagged	NA ☐	Yes ☑	No ☐			Work area clean	NA ☐	Yes ☑	No ☐
Shoring	NA ☐	Yes ☐	No ☑			Fire Extinguishers	NA ☐	Yes ☑	No ☐
Ladders checked	NA ☐	Yes ☑	No ☐				NA ☐	Yes ☐	No ☐
Spoils 2' back	NA ☐	Yes ☑	No ☐				NA ☐	Yes ☐	No ☐
Soil type A B C	NA ☐	Yes ☑	No ☐				NA ☐	Yes ☐	No ☐

Crew Summary: Forman: 1 Carps: Labs : 4 Oper: 1 Sub: Pipe layers: Others:

Productivity Topics Discussed (goals, work obstacles, materials, tools, equipment, etc.):

Back Fill trench continue pipe Fusion

Production Summary & Status: Completed Back Fill to Sta 9+10 From Sta 6+00 welded 200' of pipe From 9+90 to 11+90. placed second Tie test Sta at 10+70

Quality Control Issues/Concerns Discussed (from either the job or customer):

Proper Compaction Proper Fusion

Safety Hazards and Topics Discussed & Observations (Note Status also):

Pinch points on Fusion machine

ATTENDANCE

Employee Name	Employee Signature	Employee Name	Employee Signature
Robert Bebout			
George Ingram			
Hector Toledo			
Felipe Hernandez			
Jesus Munoz			

Employee: Questions/Concerns/Responses/Issues:

Completed By: Print: Sorry Patton Sign:

RMCI INC
GENERAL CONTRACTOR
N.M. LICENSE No. 31964

PB 10/30/17

Foreman's Daily Diary & Huddle

Project # 1611	Project Name Groundwater Conveyance		Date 10-26-17
Project Superintendent Ed Hyde		Weather Clear	Temperature 45°/74°

Site Safety Inspection :											
Competent Person	NA ☐	Yes ☑	No ☐	Rigging/ slings checked	NA ☑	Yes ☐	No ☐
Barricades	NA ☐	Yes ☑	No ☐	Fall protection tie off	NA ☑	Yes ☐	No ☐
Excavation flagged	NA ☐	Yes ☑	No ☐	Harness check	NA ☑	Yes ☐	No ☐
Shoring	NA ☐	Yes ☐	No ☑	Work area clean	NA ☐	Yes ☑	No ☐
Ladders checked	NA ☐	Yes ☑	No ☐	Fire Extinguishers	NA ☐	Yes ☑	No ☐
Spoils 2' back	NA ☐	Yes ☑	No ☐		NA ☐	Yes ☐	No ☐
Soil type A B (C)	NA ☐	Yes ☑	No ☐		NA ☐	Yes ☐	No ☐
					NA ☐	Yes ☐	No ☐

Crew Summary: Forman: 1 Carps: Labs : 4 Oper: 1 Sub: Pipe layers: Others:

Productivity Topics Discussed (goals, work obstacles, materials, tools, equipment, etc.):

Weld pipe From transformer to Vault For Final Bore
French and set pipe and conduits For concrete cup on conduit

Production Summary & Status: Fused Pipe For Final bore to Transformer
Pulled app. 210' of 2" and 4" conduit.
Dirt crew dug 320' of trench and helped Wilson set conduit and Pour cap on same. Thy also Laid out 400' of pipe to begin welding Tomorrow

Quality Control Issues/Concerns Discussed (from either the job or customer):

proper welds Proper trench depth

Safety Hazards and Topics Discussed & Observations (Note Status also):

Proper Trench Safety watch pinch Points when welding

ATTENDANCE

Employee Name	Employee Signature	Employee Name	Employee Signature
Marco Torres			
Robert Bobadilla	Robert Bobadilla		
George Ingram			
Jesus Moya	Jesus Moya		
Felipe Ruiz	Felipe Ruiz		

Employee: Questions/Concerns/Responses/Issues:

Completed By: Print: Jerry Patton Sign: Jerry Patton

RMCI INC
GENERAL CONTRACTOR
N.M. LICENSE No 31964

PJ 10/30/17

Foreman's Daily Diary & Huddle

Project # 1611	Project Name Groundwater Conveyance		Date 10-25-17
Project Superintendent Ed Hyde		Weather Clear	Temperature 43°/68°

Site Safety Inspection :

Item	NA	Yes	No	Item	NA	Yes	No
Competent Person	☐	☑	☐	Rigging/ slings checked	☑	☐	☐
Barricades	☐	☑	☐	Fall protection tie off	☑	☐	☐
Excavation flagged	☐	☑	☐	Harness check	☑	☐	☐
Shoring	☐	☐	☑	Work area clean	☐	☑	☐
Ladders checked	☐	☑	☐	Fire Extinguishers	☐	☑	☐
Spoils 2' back	☐	☑	☐		☐	☐	☐
Soil type A B (C)	☐	☑	☐		☐	☐	☐

Crew Summary: Forman: 1 Carps: Labs : 4 Oper: 1 Sub: Pipe layers: Others:

Productivity Topics Discussed (goals, work obstacles, materials, tools, equipment, etc.):

Fusion of Pipe Complete bore under Louisana

Production Summary & Status: Dug out all bore pits on base completed bore under Louisiana and pulled pipe all Bores for 4x8 pipe Complete welded 4x8 pipe from Sta 5+90 to 9+90 (400') will dig and set pipe in trench tomorrow

Quality Control Issues/Concerns Discussed (from either the job or customer):

weld Pipe properly

Safety Hazards and Topics Discussed & Observations (Note Status also):

use Care digging bore pit inside base
Fence off pits on base

ATTENDANCE

Employee Name	Employee Signature	Employee Name	Employee Signature
MARCOS [illegible]	[signature]	Felix [illegible]	[signature]
George Ingram	[signature]		
Robert Bebault	[signature]		
Jesus Mayo	[signature]		

Employee: Questions/Concerns/Responses/Issues:

Completed By: Print: Jerry Patton Sign: [signature]

RMCI INC
GENERAL CONTRACTOR
N.M. LICENSE No 31964

PJ 10/30/17

Foreman's Daily Diary & Huddle

Project # 1611	Project Name Groundwater Conveyance		Date 10.24.17
Project Superintendent Ed Hyde		Weather clear	Temperature 48°/73°

Site Safety Inspection :										
Competent Person	NA	☐	Yes	☑	No	☐	Rigging/ slings checked	NA	☐	Yes ☐ No ☐
Barricades	NA	☐	Yes	☑	No	☐	Fall protection tie off	NA	☑	Yes ☐ No ☐
Excavation flagged	NA	☐	Yes	☑	No	☐	Harness check	NA	☑	Yes ☐ No ☐
Shoring	NA	☐	Yes	☐	No	☑	Work area clean	NA	☐	Yes ☑ No ☐
Ladders checked	NA	☐	Yes	☑	No	☐	Fire Extinguishers	NA	☐	Yes ☑ No ☐
Spoils 2' back	NA	☐	Yes	☑	No	☐		NA	☐	Yes ☐ No ☐
Soil type A B C	NA	☐	Yes	☑	No	☐		NA	☐	Yes ☐ No ☐

Crew Summary: Forman: 1 Carps: Labs: 4 Oper: 1 Sub: Pipe layers: Others:

Productivity Topics Discussed (goals, work obstacles, materials, tools, equipment, etc.):

Complete pipe Trench backfill move barrier walls
Build pipe for Louisiana bore pull

Production Summary & Status: Completed pipe trench backfill to vault. Fusion machine broke down bracket on Alternator broke C.W. Woods removed and made welding repair. Completed repairs at 12:30pm. Welded 120' 4x8 and 150' of 4" and 2" conduit. Bixby bored to fence, will dig pits and complete bore and Pull tomorrow. Moved barrier walls to East to allow work for next Section of pipe Install

Quality Control Issues/Concerns Discussed (from either the job or customer):

Proper Compaction and moisture
Proper Welds

Safety Hazards and Topics Discussed & Observations (Note Status also):

watch pinch points and blades on fusion machine

ATTENDANCE

Employee Name	Employee Signature	Employee Name	Employee Signature
Robert DeBault			
Marcos Dias			
George Ingram			
Felipe			
Jesus Moya			

Employee: Questions/Concerns/Responses/Issues:

Completed By: Print: Jerry Patton Sign:

RMCI INC
GENERAL CONTRACTOR
N.M. LICENSE No. 31954

D 10/30/17

Foreman's Daily Diary & Huddle

Project # 1611	Project Name Groundwater Conveyance		Date 10-23-17
Project Superintendent Ed Hyde		Weather Clear	Temperature 50° / 74°

Site Safety Inspection :

Competent Person	NA ☐	Yes ☑	No ☐	Rigging/ slings checked	NA ☑	Yes ☐	No ☐
Barricades	NA ☐	Yes ☑	No ☐	Fall protection tie off	NA ☑	Yes ☐	No ☐
Excavation flagged	NA ☐	Yes ☑	No ☐	Harness check	NA ☑	Yes ☐	No ☐
Shoring	NA ☐	Yes ☐	No ☑	Work area clean	NA ☐	Yes ☑	No ☐
Ladders checked	NA ☐	Yes ☐	No ☐	Fire Extinguishers	NA ☐	Yes ☐	No ☐
Spoils 2' back	NA ☐	Yes ☑	No ☐		NA ☐	Yes ☐	No ☐
Soil type A B C	NA ☐	Yes ☑	No ☐		NA ☐	Yes ☐	No ☐

Crew Summary: Forman: 1 Carps: Labs : 4 Oper: 1 Sub: Pipe layers: Others:

Productivity Topics Discussed (goals, work obstacles, materials, tools, equipment, etc.):

Backfill Electric trench Weld pipe to Vault area

Production Summary & Status: Welded 160' of pipe to Vault. Dug pipe trench to Vault and began backfill of same. Completed back fill of trench for electric lines to transformer. Kirby began bore from west side of Louisiana back to pit west of Kentucky when making return to receiving pit they had hydralic hose leak causing ½ to 1 gallon oil loss. After repairs completed bore and pulled pipe leaving only Louisiana crossing for 4x8 pipe bores

Quality Control Issues/Concerns Discussed (from either the job or customer):

Proper compaction and moisture. Proper welds on pipe

Safety Hazards and Topics Discussed & Observations (Note Status also):

watch blades on facer and pinch points on pipe Fusion machine

ATTENDANCE

Employee Name	Employee Signature	Employee Name	Employee Signature
Marcos Lopez			
George Ingram			
Robert DeBault			
Jesus Mejia			
Felipe M			

Employee: Questions/Concerns/Responses/Issues:

Completed By: Print: Jerry Patton Sign:

RMCI INC
GENERAL CONTRACTOR
N.M. LICENSE No. 31964

PJ 11/13/17

Foreman's Daily Diary & Huddle

Project # 1611	Project Name Ground water Conveyance		Date 11-9-17
Project Superintendent Ed Hyde		Weather Partly Cloudy	Temperature 36°/65°

Site Safety Inspection :						Rigging/ slings checked	NA		Yes	☒	No	
Competent Person	NA		Yes	☒	No		Fall protection tie off	NA	☒	Yes		No	
Barricades	NA		Yes	☒	No		Harness check	NA	☒	Yes		No	
Excavation flagged	NA		Yes	☒	No		Work area clean	NA		Yes	☒	No	
Shoring	NA		Yes		No	☒	Fire Extinguishers	NA		Yes	☒	No	
Ladders checked	NA		Yes	☒	No			NA		Yes		No	
Spoils 2' back	NA		Yes	☒	No			NA		Yes		No	
Soil type A B (C)	NA		Yes	☒	No			NA		Yes		No	

Crew Summary: Forman: 1 Carps: Labs : 5 Oper: 1 Sub: Pipe layers: Others:

Productivity Topics Discussed (goals, work obstacles, materials, tools, equipment, etc.):

Set vault at Wellhead Backfill trench to tie-in

Production Summary & Status: Completed Backfill to Ridgecrest base. Welded 10' piece of pipe onto Tee to place inside vault For tie-in. Set Vault using Crane Services Completed install at 11:30 Am. Cleaned up area and built fence around Site moved 12 barrier walls to yard to be returned to ~~the~~ main yard Monday

Quality Control Issues/Concerns Discussed (from either the job or customer):

Set vault to grade proper compaction on Backfill

Safety Hazards and Topics Discussed & Observations (Note Status also):

Stay out From under vault while placing.

ATTENDANCE

Employee Name	Employee Signature	Employee Name	Employee Signature
Robert Bobbitt	Robert Bobbitt		
George INGRAM	George Ingram		
Felipe Hernandez	Felipe Hernandez		
Jesus Moya	Jesus Moya		
Lorenzo Trna	Lorenzo Trna		
Angel Castaneda	Angel Castaneda		

Employee: Questions/Concerns/Responses/Issues:

Completed By: Print: Jerry Patton Sign: Jerry Patton

RMCI INC
GENERAL CONTRACTOR
N.M. LICENSE No. 31964

JJ 11/13/17

Foreman's Daily Diary & Huddle

Project # 1611	Project Name Ground water Conveyance	Date 11-8-17
Project Superintendent Ed Hyde	Weather Partly Cloudy	Temperature 40°/60°

Site Safety Inspection :

Competent Person	NA	☐	Yes	☑	No	☐	Rigging/ slings checked	NA	☑	Yes	☐	No	☐
Barricades	NA	☐	Yes	☑	No	☐	Fall protection tie off	NA	☑	Yes	☐	No	☐
Excavation flagged	NA	☐	Yes	☑	No	☐	Harness check	NA	☑	Yes	☐	No	☐
Shoring	NA	☐	Yes	☐	No	☑	Work area clean	NA	☐	Yes	☑	No	☐
Ladders checked	NA	☐	Yes	☑	No	☐	Fire Extinguishers	NA	☐	Yes	☑	No	☐
Spoils 2' back	NA	☐	Yes	☑	No	☐		NA	☐	Yes	☐	No	☐
Soil type A B (C)	NA	☐	Yes	☑	No	☐		NA	☐	Yes	☐	No	☐
								NA	☐	Yes	☐	No	☐

Crew Summary: Forman: 1 Carps: Labs: 5 Oper: 1 Sub: Pipe layers: Others:

Productivity Topics Discussed (goals, work obstacles, materials, tools, equipment, etc.):

Dig next trench set place pipe Pour Concrete Cap on Conduits Completed vault base grading apply final Coat of Coating

Production Summary & Status: Completed digging trench to tie-in on Southside of Ridge Crest and poured concrete cap on conduits. Took density tests on vault Subgrade tests were at 97% and 12% moisture placed gravel For base to grade. completed coating on base and walls, Tyler said do not Coat roof section.

Quality Control Issues/Concerns Discussed (from either the job or customer):

Cover vault with Coating on outside Proper depth of trench Proper grade for vault

Safety Hazards and Topics Discussed & Observations (Note Status also):

Proper trench Safety

ATTENDANCE

Employee Name	Employee Signature	Employee Name	Employee Signature
Robert BeBault	Robert BeBault	Felipe Hernandez	Felipe Hernandez
Jesus Moya	Jesus Moya		
George Ingram	George Ingram		
Lorenzo Tena	Lorenzo Tena		
Angel Castaneda	Angel Castaneda		

Employee: Questions/Concerns/Responses/Issues:

Completed By: Print: Jerry Patton Sign: Jerry Patton

RMCI INC
GENERAL CONTRACTOR
NM LICENSE No 31964

pj 11/13/17

Foreman's Daily Diary & Huddle

Project # 1611	Project Name Groundwater Conveyance		Date 11-7-17
Project Superintendent Ed Hyde		Weather Cloudy	Temperature 53°/62°

Site Safety Inspection :						Rigging/ slings checked	NA	☒	Yes	☐	No	☐
Competent Person	NA	☐	Yes	☒	No	☐	Fall protection tie off	NA	☒	Yes	☐	No	☐
Barricades	NA	☐	Yes	☒	No	☐	Harness check	NA	☒	Yes	☐	No	☐
Excavation flagged	NA	☐	Yes	☒	No	☐	Work area clean	NA	☐	Yes	☒	No	☐
Shoring	NA	☐	Yes	☐	No	☒	Fire Extinguishers	NA	☐	Yes	☒	No	☐
Ladders checked	NA	☐	Yes	☒	No	☐		NA	☐	Yes	☐	No	☐
Spoils 2' back	NA	☐	Yes	☒	No	☐		NA	☐	Yes	☐	No	☐
Soil type A B (C)	NA	☐	Yes	☒	No	☐		NA	☐	Yes	☐	No	☐

Crew Summary: Forman: 1 Carps: Labs : 5 Oper: 1 Sub: Pipe layers: Others:

Productivity Topics Discussed (goals, work obstacles, materials, tools, equipment, etc.):

Complete digging out Vault Backfill pipe Trench
Move Barrier Walls

Production Summary & Status: Completed trench backfill to Sta 18+15
Dug out vault and and recompacted to 6" below vault base
For gravel Placement. Moved barrier walls to last section of
trench to dig out. Painted vault with first coat of Coating

Quality Control Issues/Concerns Discussed (from either the job or customer):

Proper Grade in Vault Proper compaction in trench

Safety Hazards and Topics Discussed & Observations (Note Status also):

Watch for pedestrians in work Area

ATTENDANCE

Employee Name	Employee Signature	Employee Name	Employee Signature
George Ingram		Felipe M	Felipe
Robert Bobbitt			
Angel Castaneda			
Lorenzo Tena			
Jesus Moya			

Employee: Questions/Concerns/Responses/Issues:

Completed By: Print: Jerry Patton Sign:

RMCI INC
GENERAL CONTRACTOR
N.M. LICENSE No. 31964

11/13/17

Foreman's Daily Diary & Huddle

Project # 1611	Project Name Groundwater Conveyance		Date 11-6-17
Project Superintendent	Ed Hyde	Weather Partly Cloudy	Temperature 50° / [illegible] 69°

Site Safety Inspection :													
Competent Person	NA	☐	Yes	☒	No	☐	Rigging/ slings checked	NA	☒	Yes	☐	No	☐
Barricades	NA	☐	Yes	☒	No	☐	Fall protection tie off	NA	☒	Yes	☐	No	☐
Excavation flagged	NA	☐	Yes	☒	No	☐	Harness check	NA	☒	Yes	☐	No	☐
Shoring	NA	☐	Yes	☐	No	☒	Work area clean	NA	☐	Yes	☒	No	☐
Ladders checked	NA	☐	Yes	☒	No	☐	Fire Extinguishers	NA	☐	Yes	☒	No	☐
Spoils 2' back	NA	☐	Yes	☒	No	☐		NA	☐	Yes	☐	No	☐
Soil type A B (C)	NA	☐	Yes	☒	No	☐		NA	☐	Yes	☐	No	☐

Crew Summary: Forman: 1 Carps: Labs : 5 Oper: 1 Sub: Pipe layers: Others:

Productivity Topics Discussed (goals, work obstacles, materials, tools, equipment, etc.):

Dig next section of pipe trench Dig out for welder to cut well head off and rest of vault.

Production Summary & Status: Dug out well pipe and cut 16" casing off well pipe removed grout 3hrs total time Dug out next trench section from Sta to Sta 18+55 and poured concrete cap on conduits

Quality Control Issues/Concerns Discussed (from either the job or customer):

Proper depth of trench and hole for vault

Safety Hazards and Topics Discussed & Observations (Note Status also):

Proper trench Safety

ATTENDANCE

Employee Name	Employee Signature	Employee Name	Employee Signature
Robert ReBault	Robert ReBault	Felipe Hernandez	Felipe Hernandez
George Ingram	[signature]		
Angel Castaneda	Angel Castaneda		
Lorenzo Tena	Lorenzo Tena		
Jesus Moya	Jesus Moya		

Employee: Questions/Concerns/Responses/Issues:

Completed By: Print: Jerry Patton Sign: Jerry Patton

RMCI INC
GENERAL CONTRACTOR
N.M. LICENSE No 31964

P 11/9/17

Foreman's Daily Diary & Huddle

Project # 1611	Project Name Ground water Conveyance	Date 11-3-17
Project Superintendent Ed Hyde	Weather Clear	Temperature 40°/66°

Site Safety Inspection :					Rigging/ slings checked	NA	Yes	No
Competent Person	NA ☒	Yes ☐	No ☐		Fall protection tie off	NA ☒	Yes ☐	No ☐
Barricades	NA ☒	Yes ☐	No ☐		Harness check	NA ☒	Yes ☐	No ☐
Excavation flagged	NA ☒	Yes ☐	No ☐		Work area clean	NA ☐	Yes ☒	No ☐
Shoring	NA ☒	Yes ☐	No ☐		Fire Extinguishers	NA ☐	Yes ☒	No ☐
Ladders checked	NA ☒	Yes ☐	No ☐			NA ☐	Yes ☐	No ☐
Spoils 2' back	NA ☐	Yes ☐	No ☐			NA ☐	Yes ☐	No ☐
Soil type A B C	NA ☐	Yes ☐	No ☐			NA ☐	Yes ☐	No ☐

Crew Summary: Forman: 1 Carps: 4 Labs: 4 Oper: 1 Sub: Pipe layers: Others:

Productivity Topics Discussed (goals, work obstacles, materials, tools, equipment, etc.):

Move Barrier walls Cleanup Stumps

Production Summary & Status: Sent George and Marcos to Seffs job to help bring outs. Moved all barrier walls to next section of Trench while moving walls Jesus Moya brushed telephone pole with loader tire damaging outer shell PNM checked pole and said it was OK. Cleaned up stumps and roots from Right of way For now will have more to cleanup Later.

Quality Control Issues/Concerns Discussed (from either the job or customer):

Cleanup area

Safety Hazards and Topics Discussed & Observations (Note Status also):

Stay out from under barrier walls when setting in place watch For Nay walkers

ATTENDANCE

Employee Name	Employee Signature	Employee Name	Employee Signature
Felipe Hernandez	Felipe Hernandez		
Robert Bedwell	Robert Bedwell		
Lorenzo Tena	Lorenzo Tena		
Jesus Moya	Jesus Moya		
Angel Castaneda	Angel Castaneda		

Employee: Questions/Concerns/Responses/Issues:

Completed By: Print: Jerry Patton Sign: Jerry Patton

RMCI INC
GENERAL CONTRACTOR
NM LICENSE No 31964

19 11/9/17

Foreman's Daily Diary & Huddle

Project # 1611	Project Name Ground water conveyance		Date 11-2-17
Project Superintendent Ed Hyde		Weather Clear	Temperature 46°/71°

Site Safety Inspection :						Rigging/ slings checked	NA ☑	Yes ☐	No ☐
Competent Person	NA ☐	Yes ☑	No ☐			Fall protection tie off	NA ☒	Yes ☐	No ☐
Barricades	NA ☐	Yes ☑	No ☐			Harness check	NA ☒	Yes ☐	No ☐
Excavation flagged	NA ☐	Yes ☒	No ☐			Work area clean	NA ☐	Yes ☒	No ☐
Shoring	NA ☐	Yes ☐	No ☒			Fire Extinguishers	NA ☐	Yes ☒	No ☐
Ladders checked	NA ☐	Yes ☑	No ☐				NA ☐	Yes ☐	No ☐
Spoils 2' back	NA ☐	Yes ☑	No ☐				NA ☐	Yes ☐	No ☐
Soil type A B (C)	NA ☐	Yes ☒	No ☐				NA ☐	Yes ☐	No ☐

Crew Summary: Forman: 1 Carps: Labs : 6 Oper: 1 Sub: Pipe layers: Others:

Productivity Topics Discussed (goals, work obstacles, materials, tools, equipment, etc.):

Backfill trench Build 45° For Ridgecrest Crossing

Production Summary & Status: welded two 45° Bends with 4" pipes on each side to be prepared for Ridgecrest crossing also welded tee with termination Flange for vault penetration. Completed backfill to Sta 15+00, began moving barrier wall for next trench Section.

Quality Control Issues/Concerns Discussed (from either the job or customer):

Proper Compaction Proper welds

Safety Hazards and Topics Discussed & Observations (Note Status also):

watch Pinch points watch pedestrians watch powerlines

ATTENDANCE

Employee Name	Employee Signature	Employee Name	Employee Signature
MARCOS TOVAR		Jesus Moya	
Angel Castaneda	Angel Castaneda		
Lorenzo Tena	Lorenzo Tena		
Felipe Hernandez	Felipe Hernandez		
George Ingram			
Robert Barrett			

Employee: Questions/Concerns/Responses/Issues:

Completed By: Print: Jerry Patton Sign:

RMCI INC
GENERAL CONTRACTOR
N.M. LICENSE No. 31964

By 11/9/17

Foreman's Daily Diary & Huddle

Project # 1611	Project Name Ground water Conveyance	Date 11-1-17
Project Superintendent Ed Hyde	Weather	Temperature 45° / 70°

Site Safety Inspection :						Rigging/ slings checked	NA ☑	Yes ☐	No ☐
Competent Person	NA ☐	Yes ☑	No ☐			Fall protection tie off	NA ☑	Yes ☐	No ☐
Barricades	NA ☐	Yes ☑	No ☐			Harness check	NA ☑	Yes ☐	No ☐
Excavation flagged	NA ☐	Yes ☑	No ☐			Work area clean	NA ☐	Yes ☑	No ☐
Shoring	NA ☐	Yes ☐	No ☑			Fire Extinguishers	NA ☐	Yes ☑	No ☐
Ladders checked	NA ☐	Yes ☐	No ☐				NA ☐	Yes ☐	No ☐
Spoils 2' back	NA ☐	Yes ☐	No ☐				NA ☐	Yes ☐	No ☐
Soil type A B C	NA ☐	Yes ☑	No ☐				NA ☐	Yes ☐	No ☐

Crew Summary: Forman: 1 Carps: Labs: 10 Oper: 1 Sub: Pipe layers: Others:

Productivity Topics Discussed (goals, work obstacles, materials, tools, equipment, etc.):

Move barrier walls dig next Section of trench and set pipe complete welding pipe to first bore

Production Summary & Status: First thing in morning Ed attempted to move barrier wall by loading one on each Fork when setting them down he broke left hand Fork in 2 places. moved Barrier walls to next stretch of trench to be excavated dug 250' and placed pipe in trench also poured Cap on Conduit. welded 160' of pipe and one Test Station Tee to bring pipe close to Ridge Crest Crossing Bore

Quality Control Issues/Concerns Discussed (from either the job or customer):

Proper welds proper depth of trench

Safety Hazards and Topics Discussed & Observations (Note Status also):

Pinch points trench Safety

ATTENDANCE

Employee Name	Employee Signature	Employee Name	Employee Signature
Marcos Ortiz			
Jose D Moy			
Robert Beltran			
Felipe Herrera			
Angel Castaneda			
Lorenzo Tena			

Employee: Questions/Concerns/Responses/Issues:

Completed By: Print: Jerry Parton Sign:

RMCI INC
GENERAL CONTRACTOR
NM LICENSE No. 31964

By 11/2/17

Foreman's Daily Diary & Huddle

Project # 1611	Project Name Ground water Conveyance		Date 10-31-17
Project Superintendent Ed Hyde		Weather Cloudy	Temperature 40° / 60°

Site Safety Inspection :					Rigging/ slings checked	NA ☒	Yes ☐	No ☐
Competent Person	NA ☐	Yes ☒	No ☐		Fall protection tie off	NA ☒	Yes ☐	No ☐
Barricades	NA ☐	Yes ☒	No ☐		Harness check	NA ☒	Yes ☐	No ☐
Excavation flagged	NA ☐	Yes ☒	No ☐		Work area clean	NA ☐	Yes ☒	No ☐
Shoring	NA ☐	Yes ☐	No ☒		Fire Extinguishers	NA ☐	Yes ☒	No ☐
Ladders checked	NA ☐	Yes ☒	No ☐			NA ☐	Yes ☐	No ☐
Spoils 2' back	NA ☐	Yes ☒	No ☐			NA ☐	Yes ☐	No ☐
Soil type A B C	NA ☐	Yes ☒	No ☐			NA ☐	Yes ☐	No ☐

Crew Summary: Forman: 1 Carps: Labs: 6 Oper: 1 Sub: Pipe layers: Others:

Productivity Topics Discussed (goals, work obstacles, materials, tools, equipment, etc.):

BackFill trench Continue welding Pipe Dig out Vault Location

Production Summary & Status: Completed backFill on pipe to Sta 11+10. Welded 320' of pipe Sta 15+90 to Sta 19+10. Started to dig out For well vault discovered 16" Casing around 8" well pipe Earl with EA said 16" pipe continues to 30' down all encased in Concrete. Bull in EA coarse to cut casing and remove Concrete Far enough down to allow us to set vault.

Quality Control Issues/Concerns Discussed (from either the job or customer):

Proper welds and Compaction

Safety Hazards and Topics Discussed & Observations (Note Status also):

Pinch Points on welding machine

ATTENDANCE

Employee Name	Employee Signature	Employee Name	Employee Signature
Jesus Moya	Moya	Felipe Herrera	Felipe Herrera
Robert Bell	Robert Bell	Angel Castaneda	Angel Castaneda
Lorenzo Tejada	Lorenzo Tejada		
Marcos Tejada			
George Ingram			

Employee: Questions/Concerns/Responses/Issues:

Completed By: Print: Sign:

RMCI INC
GENERAL CONTRACTOR
N.M. LICENSE No 31964

9/19/17

Foreman's Daily Diary & Huddle

Project # 1611	Project Name Ground water Conveyance		Date 10-30-17
Project Superintendent Ed Hyde		Weather Clear	Temperature 96°/55

Site Safety Inspection :							Rigging/ slings checked	NA	☒	Yes	☐	No	☐
Competent Person	NA	☐	Yes	☒	No	☐	Fall protection tie off	NA	☒	Yes	☐	No	☐
Barricades	NA	☐	Yes	☒	No	☐	Harness check	NA	☒	Yes	☐	No	☐
Excavation flagged	NA	☐	Yes	☒	No	☐	Work area clean	NA	☐	Yes	☒	No	☐
Shoring	NA	☐	Yes	☐	No	☒	Fire Extinguishers	NA	☐	Yes	☒	No	☐
Ladders checked	NA	☐	Yes	☒	No	☐		NA	☐	Yes	☐	No	☐
Spoils 2' back	NA	☐	Yes	☒	No	☐		NA	☐	Yes	☐	No	☐
Soil type A B (C)	NA	☐	Yes	☒	No	☐		NA	☐	Yes	☐	No	☐

Crew Summary: Forman: 1 Carps: Labs: 6 Oper: 1 Sub: Pipe layers: Others:

Productivity Topics Discussed (goals, work obstacles, materials, tools, equipment, etc.):

Move barrier walls East. Start New Trench. Continue Pipe Fusion

Production Summary & Status: moved barrier walls to cover next trench section to be excavated. Dug out next 220' of trench placed pipe and conduit in trench Wilson poured cap on conduit. welded 480' of pipe from Sta 11+90 to 15+90 placed tee at 15+50

Quality Control Issues/Concerns Discussed (from either the job or customer):

Proper depth of trench Proper Fusion methods on pipe

Safety Hazards and Topics Discussed & Observations (Note Status also):

Stay out From under Barrier Walls when moving
Proper trench Safety when digging
Pinch Points, Heater and Facer while Fusion occuring

ATTENDANCE

Employee Name	Employee Signature	Employee Name	Employee Signature
Jesus Mayo	Mayo	Angel Castaneda	Angel Castaneda
Fernie Hernandez			
George Ingram			
Robert Babbitt			
Lorenzo Tena	Lorenzo		
Marcos Flores			

Employee: Questions/Concerns/Responses/Issues:

Completed By: Print: Jerry Patton Sign:

RMCI INC
GENERAL CONTRACTOR
N.M. LICENSE No. 31964

PJ. 11/21/17

Foreman's Daily Diary & Huddle

Project # 1611	Project Name Ground water Conveyance		Date 11-17-17
Project Superintendent	Ed Hyde	Weather Partly Cloudy	Temperature 52°/70°

Site Safety Inspection :							Rigging/ slings checked	NA	☒	Yes	☐	No	☐
Competent Person	NA	☐	Yes	☒	No	☐	Fall protection tie off	NA	☒	Yes	☐	No	☐
Barricades	NA	☐	Yes	☒	No	☐	Harness check	NA	☒	Yes	☐	No	☐
Excavation flagged	NA	☐	Yes	☒	No	☐	Work area clean	NA	☐	Yes	☒	No	☐
Shoring	NA	☐	Yes	☐	No	☒	Fire Extinguishers	NA	☐	Yes	☒	No	☐
Ladders checked	NA	☐	Yes	☒	No	☐		NA	☐	Yes	☐	No	☐
Spoils 2' back	NA	☐	Yes	☒	No	☐		NA	☐	Yes	☐	No	☐
Soil type A B (C)	NA	☐	Yes	☒	No	☐		NA	☐	Yes	☐	No	☐

Crew Summary: Forman: 1 Carps: Labs: 5 Oper: 1 Sub: Pipe layers: Others:

Productivity Topics Discussed (goals, work obstacles, materials, tools, equipment, etc.):

Complete backfill South side Ridge crest
Attempt to complete tie-in at Kentucky

Production Summary & Status: Completed Kentucky tie-in and completed backfill on South side of Ridge crest.

Quality Control Issues/Concerns Discussed (from either the job or customer):

Proper welds watch inner pipe
Proper Compaction

Safety Hazards and Topics Discussed & Observations (Note Status also):

Watch Pinch points on blades of Fusion machine
Watch traffic use Flaggers when moving Barrier Walls

ATTENDANCE

Employee Name	Employee Signature	Employee Name	Employee Signature
Felipe Hernandez	Felipe		
Robert BeBault	Robert BeBault		
George Ingram			
Angel Castaneda	Angel Castaneda		
Jesus Mesa			
Lorenzo Tena	Lorenzo Tena		

Employee: Questions/Concerns/Responses/Issues:

Completed By: Print: Jerry Patton Sign:

RMCI INC
GENERAL CONTRACTOR
N.M. LICENSE No 31954

PJ 11/21/17

Foreman's Daily Diary & Huddle

Project # 1611	Project Name Ground Water Conveyance		Date 11-16-17
Project Superintendent Ed Hydz		Weather Clear	Temperature 49°/72°

Site Safety Inspection :											
Competent Person	NA ☐	Yes ☒	No ☐	Rigging/ slings checked	NA ☐	Yes ☐	No ☐
Barricades	NA ☐	Yes ☒	No ☐	Fall protection tie off	NA ☐	Yes ☐	No ☐
Excavation flagged	NA ☐	Yes ☒	No ☐	Harness check	NA ☐	Yes ☐	No ☐
Shoring	NA ☐	Yes ☐	No ☒	Work area clean	NA ☐	Yes ☐	No ☐
Ladders checked	NA ☐	Yes ☒	No ☐	Fire Extinguishers	NA ☐	Yes ☐	No ☐
Spoils 2' back	NA ☐	Yes ☒	No ☐		NA ☐	Yes ☐	No ☐
Soil type A B (C)	NA ☐	Yes ☒	No ☐		NA ☐	Yes ☐	No ☐

Crew Summary: Forman: 1 Carps: Labs : 5 Oper: 1 Sub: Pipe layers: Others:

Productivity Topics Discussed (goals, work obstacles, materials, tools, equipment, etc.):

BackFill a bore pit Make tie-in at Kentucky

Production Summary & Status: Set Electric Pull at southside of Ridgecrest and Began backfill completed app. 75% of Fill. Pugout tie-in at Kentucky and started tie-in did not complete tie-in due to inner pipe not pulling in properly will cut pipe tomorrow and place a factory weld in place to try to fix problem

Quality Control Issues/Concerns Discussed (from either the job or customer):

Proper Compaction Proper weld at tie-in

Safety Hazards and Topics Discussed & Observations (Note Status also):

Watch pinch points and Blades on fusion machine
Stay out from under Barrier walls when moving
watch out for Pedestrians and Traffic

ATTENDANCE

Employee Name	Employee Signature	Employee Name	Employee Signature
Angel Castaneda	Angel Castaneda	JCS - Mega	
Lorenzo Tena	Lorenzo Tena		
George Engrom			
Felipe	Felipe		
Robert Bebout			

Employee: Questions/Concerns/Responses/Issues:

Completed By: Print: Jerry Patton Sign:

RMCI INC
GENERAL CONTRACTOR
NM LICENSE No 31964

PD 11/21/17

Foreman's Daily Diary & Huddle

Project # 1611	Project Name Groundwater Conveyance		Date 11-15-17
Project Superintendent Ed Hyde		Weather Clear	Temperature 44°/66°

Site Safety Inspection :												
Competent Person	NA ☐	Yes ☑	No ☐	Rigging/ slings checked	NA ☐	Yes ☐	No ☐
Barricades	NA ☐	Yes ☑	No ☐	Fall protection tie off	NA ☐	Yes ☐	No ☐
Excavation flagged	NA ☐	Yes ☑	No ☐	Harness check	NA ☐	Yes ☐	No ☐
Shoring	NA ☐	Yes ☐	No ☑	Work area clean	NA ☐	Yes ☐	No ☐
Ladders checked	NA ☐	Yes ☑	No ☐	Fire Extinguishers	NA ☐	Yes ☐	No ☐
Spoils 2' back	NA ☐	Yes ☑	No ☐	_____	NA ☐	Yes ☐	No ☐
Soil type A B C	NA ☐	Yes ☑	No ☐	_____	NA ☐	Yes ☐	No ☐

Crew Summary: Forman: 1 Carps: Labs: 5 Oper: 1 Sub: Pipe layers: Others:

Productivity Topics Discussed (goals, work obstacles, materials, tools, equipment, etc.):

Work on tie-in northside of Ridgecrest Complete Vault Backfill

Production Summary & Status: Completed backfill around well Vault 100%. Received vault for inside base tie-in. Made bare tie-in at North side of Ridgecrest Complete. Had problem with Final weld band did not roll up properly decided to cut out weld and redo. Second weld rolled up properly did not leave sit until 5:30 PM.

Quality Control Issues/Concerns Discussed (from either the job or customer):

~~Watch Pinch points~~ proper welds at Tie-in Proper Compaction on Backfill

Safety Hazards and Topics Discussed & Observations (Note Status also):

Watch pinch points and blades on Fusion Machine
Proper trench Saftey at tie-ins

ATTENDANCE

Employee Name	Employee Signature	Employee Name	Employee Signature
George Ingram			
Angel Castaneda	Angel Castaneda		
Felipe Hernandez	Felipe H		
Jesus Mayo	Mayo		
Lorenzo Tena	Lorenzo Tena		
Robert Reitzel	Robert Reitzel		

Employee: Questions/Concerns/Responses/Issues:

Completed By: Print: Jerry Patton Sign: Jerry Patton

RMCI INC
GENERAL CONTRACTOR
N.M. LICENSE No. 31964

BJ 11/21/17

Foreman's Daily Diary & Huddle

Project # 1611	Project Name Groundwater Conveyance	Date 11-14-17
Project Superintendent Ed Hyde	Weather Partly Cloudy	Temperature 38°/71°

Site Safety Inspection :						Rigging/ slings checked	NA ☑	Yes ☐	No ☐
Competent Person	NA ☐	Yes ☑	No ☐			Fall protection tie off	NA ☑	Yes ☐	No ☐
Barricades	NA ☐	Yes ☑	No ☐			Harness check	NA ☑	Yes ☐	No ☐
Excavation flagged	NA ☐	Yes ☑	No ☐			Work area clean	NA ☐	Yes ☑	No ☐
Shoring	NA ☐	Yes ☐	No ☑			Fire Extinguishers	NA ☐	Yes ☑	No ☐
Ladders checked	NA ☐	Yes ☑	No ☐				NA ☐	Yes ☐	No ☐
Spoils 2' back	NA ☐	Yes ☑	No ☐				NA ☐	Yes ☐	No ☐
Soil type A B (C)	NA ☐	Yes ☑	No ☐				NA ☐	Yes ☐	No ☐

Crew Summary: Forman: 1 Carps: Labs : 5 Oper: 1 Sub: Pipe layers: Others: ✓

Productivity Topics Discussed (goals, work obstacles, materials, tools, equipment, etc.):

Tie-in Box on South Side of Ridge crest Backfill Vault

Production Summary & Status: Completed tie-in at box on southside of Ridge crest ~~Completed~~ Wilson drilled vault for their conduits and blew out vault wall on outside due to them not making repairs we grouted holes so we could do backfill will paint patches tomorrow. Bladed right of way from trackout pad to Sta 19+50 to clean up right of way

Quality Control Issues/Concerns Discussed (from either the job or customer):

Proper welds at Tie-in Proper compaction around Vault

Safety Hazards and Topics Discussed & Observations (Note Status also):

watch out for pinch points and Blades on welding machine

ATTENDANCE

Employee Name	Employee Signature	Employee Name	Employee Signature
George INGRAM			
Angel Castaneda	Angel Castaneda		
Fel Pelz	Fel Pelz		
Jesus Mayo	Jesus Mayo		
Lorenzo Irma	Lorenzo Irma		
Robert Burnett	Robert Burnett		

Employee: Questions/Concerns/Responses/Issues:

Completed By: Print: Jerry Patton Sign: Jerry Patton

PJ 11/21/17

RMCI INC
GENERAL CONTRACTOR
N.M. LICENSE No. 31954

Foreman's Daily Diary & Huddle

Project # 1611	Project Name Ground Water Convergance	Date 11-13-17
Project Superintendent Ed Hyde	Weather Partly Cloudy	Temperature 48°, 71°

Site Safety Inspection :

Competent Person	NA ☐	Yes ☑	No ☐	Rigging/ slings checked	NA ☑	Yes ☐	No ☐
Barricades	NA ☐	Yes ☑	No ☐	Fall protection tie off	NA ☑	Yes ☐	No ☐
Excavation flagged	NA ☐	Yes ☑	No ☐	Harness check	NA ☑	Yes ☐	No ☐
Shoring	NA ☐	Yes ☐	No ☑	Work area clean	NA ☐	Yes ☑	No ☐
Ladders checked	NA ☐	Yes ☑	No ☐	Fire Extinguishers	NA ☐	Yes ☑	No ☐
Spoils 2' back	NA ☐	Yes ☑	No ☐		NA ☐	Yes ☐	No ☐
Soil type A B (C)	NA ☐	Yes ☑	No ☐		NA ☐	Yes ☐	No ☐
					NA ☐	Yes ☐	No ☐

Crew Summary: Forman: 1 Carps: Labs : 5 Oper: 1 Sub: Pipe layers: Others:

Productivity Topics Discussed (goals, work obstacles, materials, tools, equipment, etc.):

Do Tie-in at Vault Move barrier walls For Transport

Production Summary & Status: Completed tie-in at vault backfilled trench waiting on Wilson to core holes for conduits. Transported Excavator out received Blade hauled out 26 barrier walls

Quality Control Issues/Concerns Discussed (from either the job or customer):

Proper welds at vault make Sure Tee is plumb

Safety Hazards and Topics Discussed & Observations (Note Status also):

Stay out From under barrier walls when moving

ATTENDANCE

Employee Name	Employee Signature	Employee Name	Employee Signature
Felipe Hernandez	Felipe Hernandez		
Angel Castaneda	Angel Castaneda		
Lorenzo Tena	Lorenzo Tena		
George INGram			
Robert DeBault	Robert DeBault		
JESUS Moya	JMoya		

Employee: Questions/Concerns/Responses/Issues:

Completed By: Print: Jerry Patton Sign: Jerry Patton

RMCI INC
GENERAL CONTRACTOR
N.M. LICENSE No. 31964

P) 11-28-17

Foreman's Daily Diary & Huddle

Project # 1611	Project Name Ground water Convergence		Date 11-22-17
Project Superintendent Ed Hyde		Weather Clear	Temperature 38°

Site Safety Inspection :						Rigging/ slings checked	NA	☒	Yes	☐	No	☐
Competent Person	NA	☒	Yes	☐	No	☐	Fall protection tie off	NA	☒	Yes	☐	No	☐
Barricades	NA	☒	Yes	☐	No	☐	Harness check	NA	☒	Yes	☐	No	☐
Excavation flagged	NA	☒	Yes	☐	No	☐	Work area clean	NA	☐	Yes	☒	No	☐
Shoring	NA	☒	Yes	☐	No	☐	Fire Extinguishers	NA	☐	Yes	☒	No	☐
Ladders checked	NA	☒	Yes	☐	No	☐		NA	☐	Yes	☐	No	☐
Spoils 2' back	NA	☒	Yes	☐	No	☐		NA	☐	Yes	☐	No	☐
Soil type A B C	NA	☒	Yes	☐	No	☐		NA	☐	Yes	☐	No	☐

Crew Summary: Forman: 1 Carps: Labs : 5 Oper: 1 Sub: Pipe layers: Others:

Productivity Topics Discussed (goals, work obstacles, materials, tools, equipment, etc.):

Clean up Right of way

Production Summary & Status: Picked up all scrap pipe on Right of way
Removed all trash (tree roots and stumps) from right of way
Took density tests at Stn 18+50, Southside Ridge crest bore and Kentucky Bore all tests passed

Quality Control Issues/Concerns Discussed (from either the job or customer):

Cleanup From East to west 100% as we go

Safety Hazards and Topics Discussed & Observations (Note Status also):

Stay out from under barrier walls when moving

ATTENDANCE

Employee Name	Employee Signature	Employee Name	Employee Signature
Robert BeBault	Robert BeBault		
George INGRAM			
Angel Castaneda	Angel Castaneda		
Jesus Mesa			
Felipe H	Felipe H		
Lorenzo Tena	Lorenzo Tena		

Employee: Questions/Concerns/Responses/Issues:

Completed By: Print: Jerry Patton Sign:

RMCI INC
GENERAL CONTRACTOR
N M LICENSE No 31964

PJ 11-28-17

Foreman's Daily Diary & Huddle

Project # 1611	Project Name Groundwater Conveyance	Date 11-21-17
Project Superintendent Ed Hyde	Weather Clear	Temperature 44°/61°

Site Safety Inspection :						Rigging/ slings checked	NA ☒	Yes ☐	No ☐
Competent Person	NA ☐	Yes ☒	No ☐			Fall protection tie off	NA ☒	Yes ☐	No ☐
Barricades	NA ☐	Yes ☒	No ☐			Harness check	NA ☒	Yes ☐	No ☐
Excavation flagged	NA ☐	Yes ☒	No ☐			Work area clean	NA ☐	Yes ☒	No ☐
Shoring	NA ☐	Yes ☐	No ☒			Fire Extinguishers	NA ☐	Yes ☒	No ☐
Ladders checked	NA ☐	Yes ☒	No ☐				NA ☐	Yes ☐	No ☐
Spoils 2' back	NA ☐	Yes ☒	No ☐				NA ☐	Yes ☐	No ☐
Soil type A B (C)	NA ☐	Yes ☒	No ☐				NA ☐	Yes ☐	No ☐

Crew Summary: Forman: 1 Carps: Labs : 5 Oper: 1 Sub: Pipe layers: Others:

Productivity Topics Discussed (goals, work obstacles, materials, tools, equipment, etc.):

Backfill at Kentucky bore pit

Production Summary & Status: Completed Backfill on bore pit at Kentucky and Bore pit at Louisana. Began right of way cleanup

Quality Control Issues/Concerns Discussed (from either the job or customer):

Proper Compaction of Backfill

Safety Hazards and Topics Discussed & Observations (Note Status also):

watch traffic and Pedestrians

ATTENDANCE

Employee Name	Employee Signature	Employee Name	Employee Signature
George Ingram			
Felipe Alt			
Jesus Mejor			
Angel Castaneda			
Lorenzo Tena			
Robert Rebar			

Employee: Questions/Concerns/Responses/Issues:

Completed By: Print: Jerry Patton Sign:

RMCI INC
GENERAL CONTRACTOR
NM LICENSE No 31964

P 11-28-17

Foreman's Daily Diary & Huddle

Project # 1611	Project Name Groundwater Conveyance	Date 11-20-17
Project Superintendent Ed Hydz	Weather Clear	Temperature 31° / 61°

Site Safety Inspection :																
Competent Person	NA	☐	Yes	☐	No	☐	Rigging/ slings checked	NA	☑	Yes	☐	No	☐
Barricades	NA	☐	Yes	☑	No	☐	Fall protection tie off	NA	☑	Yes	☐	No	☐
Excavation flagged	NA	☐	Yes	☑	No	☐	Harness check	NA	☑	Yes	☐	No	☐
Shoring	NA	☐	Yes	☐	No	☑	Work area clean	NA	☐	Yes	☑	No	☐
Ladders checked	NA	☐	Yes	☑	No	☐	Fire Extinguishers	NA	☐	Yes	☑	No	☐
Spoils 2' back	NA	☐	Yes	☑	No	☐		NA	☐	Yes	☐	No	☐
Soil type A B (C)	NA	☐	Yes	☑	No	☐		NA	☐	Yes	☐	No	☐
								NA	☐	Yes	☐	No	☐

Crew Summary: Forman: 1 Carps: Labs : 5 Oper: 1 Sub: Pipe layers: Others:

Productivity Topics Discussed (goals, work obstacles, materials, tools, equipment, etc.):

Begin tie-in at Louisana
Backfill North side of Ridge crest

Production Summary & Status: Completed backfill on North side of Ridge crest at bore. Completed tie-in at Louisiana bore all bore tie-ins complete

Quality Control Issues/Concerns Discussed (from either the job or customer):

Proper compaction Proper welding

Safety Hazards and Topics Discussed & Observations (Note Status also):

Lay back trench Slopes properly when digging for tie-in
watch Blades and Pinch points on fusion machine
watch for Pedestrians and traffic

ATTENDANCE

Employee Name	Employee Signature	Employee Name	Employee Signature
Fernando	Fernando		
Angel Castaneda	Angel Castaneda		
Jesus Mayo	Jesus Mayo		
Lorenzo Tena	Lorenzo Tena		
George Ingram			
Robert Bryant	Robert Bryant		

Employee: Questions/Concerns/Responses/Issues:

Completed By: Print: Jerry Patton Sign: Jerry Patton

RMCI INC
GENERAL CONTRACTOR
N.M. LICENSE No. 31964

PJ 12/7/17

Foreman's Daily Diary & Huddle

Project # 1611	Project Name Ground water Conveyance		Date 12-1-17
Project Superintendent	Ed Hyde	Weather Clear	Temperature 44°/59°

Site Safety Inspection :														
Competent Person	NA	☐	Yes	☒	No	☐	Rigging/ slings checked	NA	☐	Yes	☒	No	☐
Barricades	NA	☐	Yes	☒	No	☐	Fall protection tie off	NA	☒	Yes	☐	No	☐
Excavation flagged	NA	☐	Yes	☒	No	☐	Harness check	NA	☒	Yes	☐	No	☐
Shoring	NA	☐	Yes	☐	No	☒	Work area clean	NA	☐	Yes	☒	No	☐
Ladders checked	NA	☐	Yes	☒	No	☐	Fire Extinguishers	NA	☐	Yes	☒	No	☐
Spoils 2' back	NA	☐	Yes	☒	No	☐		NA	☐	Yes	☐	No	☐
Soil type A B C	NA	☐	Yes	☒	No	☐		NA	☐	Yes	☐	No	☐
								NA	☐	Yes	☐	No	☐

Crew Summary: Forman: 1 Carps: Labs : 5 Oper: 1 Sub: Pipe layers: Others:

Productivity Topics Discussed (goals, work obstacles, materials, tools, equipment, etc.):

Do retest on inner pipe
Complete tie-in Set vault

Production Summary & Status: Completed retest passed on Innerpipe. Set bollards around well vault need to Concrete inside pipes Completed Tie-in at junction vault and Set base and and walls of vault. Tie-in was tough but we got it done.

Quality Control Issues/Concerns Discussed (from either the job or customer):

Make Proper welds and measurements at Tie-in
Get positive test of pipe

Safety Hazards and Topics Discussed & Observations (Note Status also):

Only authorized personal in test area
watch Pinch points, Blades and Heater on Fusion Machine

ATTENDANCE

Employee Name	Employee Signature	Employee Name	Employee Signature
Robert Bebault	Robert Bebault	Felipe	Felipe
George Ingram			
Angel Castaneda	Angel Castaneda		
Lorenzo Tena	Lorenzo Tena		
Jesus Mayo			

Employee: Questions/Concerns/Responses/Issues:

Completed By: Print: Jerry Patton Sign:

RMCI INC
GENERAL CONTRACTOR
NM LICENSE No 31964

JM 12/7/17

Foreman's Daily Diary & Huddle

Project # 1611	Project Name Ground water Conveyance	Date 11-30-17
Project Superintendent Ed Hyde	Weather cloudy	Temperature 43° / 59°

Site Safety Inspection :						Rigging/ slings checked	NA ☒	Yes ☐	No ☐
Competent Person	NA ☐	Yes ☒	No ☐			Fall protection tie off	NA ☒	Yes ☐	No ☐
Barricades	NA ☐	Yes ☒	No ☐			Harness check	NA ☒	Yes ☐	No ☐
Excavation flagged	NA ☐	Yes ☒	No ☐			Work area clean	NA ☐	Yes ☒	No ☐
Shoring	NA ☐	Yes ☐	No ☒			Fire Extinguishers	NA ☐	Yes ☒	No ☐
Ladders checked	NA ☐	Yes ☒	No ☐				NA ☐	Yes ☐	No ☐
Spoils 2' back	NA ☐	Yes ☒	No ☐				NA ☐	Yes ☐	No ☐
Soil type A B (C)	NA ☐	Yes ☒	No ☐				NA ☐	Yes ☐	No ☐

Crew Summary: Forman: 1 Carps: Labs : 5 Oper: 1 Sub: Pipe layers: Others:

Productivity Topics Discussed (goals, work obstacles, materials, tools, equipment, etc.):

Do air test work on final tie-in dig ballard Holes at well vault

Production Summary & Status: Began air test while Filling Tyler informed us that Army Carp would not except hydrostatic Test results and we must retest even though we knew leakage was on our test flange fitting at the 2" Bushing. Passed air test and began draining pipe to change out flange to refill and retest Hydrostatic. waited on EA to drain existing line to begin welding for Tie-in. Cut pipe at Tie-in and welded termination Flange on North side will wait until tomorrow to weld South side due to pipe shrinkage when cut was made. Filled inner pipe to 53# for Retest first thing in the morning.

Quality Control Issues/Concerns Discussed (from either the job or customer):

make sure to cut pipes for welding to fit 4 piece to be Installed

Safety Hazards and Topics Discussed & Observations (Note Status also):

Authorized personal only in test area

ATTENDANCE

Employee Name	Employee Signature	Employee Name	Employee Signature
George Ingram		Fel Pelt	Fel Pelt
Robert Bellcourt			
Lorenzo Tena			
Jesus Moya			
Angel Castaneda	Angel Castaneda		

Employee: Questions/Concerns/Responses/Issues:

Completed By: Print: Jerry Patton Sign: Jerry Patton

RMCI INC
GENERAL CONTRACTOR
NM LICENSE No 31964

PJ 12/7/17

Foreman's Daily Diary & Huddle

Project # 1611	Project Name Groundwater Convergence		Date 11-29-17
Project Superintendent Ed Hyde		Weather Clear	Temperature 35°/59°

Site Safety Inspection :

Competent Person	NA ☐	Yes ☒	No ☐		Rigging/ slings checked	NA ☒	Yes ☐	No ☐
Barricades	NA ☐	Yes ☒	No ☐		Fall protection tie off	NA ☒	Yes ☐	No ☐
Excavation flagged	NA ☐	Yes ☒	No ☐		Harness check	NA ☒	Yes ☐	No ☐
Shoring	NA ☐	Yes ☐	No ☒		Work area clean	NA ☐	Yes ☒	No ☐
Ladders checked	NA ☐	Yes ☒	No ☐		Fire Extinguishers	NA ☐	Yes ☒	No ☐
Spoils 2' back	NA ☐	Yes ☐	No ☐			NA ☐	Yes ☐	No ☐
Soil type A B (C)	NA ☐	Yes ☒	No ☐			NA ☐	Yes ☐	No ☐

Crew Summary: Forman: 1 Carps: Labs: 5 Oper: 1 Sub: Pipe layers: Others:

Productivity Topics Discussed (goals, work obstacles, materials, tools, equipment, etc.):

Prep for pipe test
Continue Cleanup

Production Summary & Status: Did pipe test Hydrostatic had Leak at bushing in Flange inside vault lost 12# of Pressure but was still inside tolerance of 18# loss EA says test passed. Made all trees ready for air test to be done tomorrow first thing. Finished cleanup along right-of-way

Quality Control Issues/Concerns Discussed (from either the job or customer):

Test at proper pressure for proper duration

Safety Hazards and Topics Discussed & Observations (Note Status also):

Only authorized personal near pipe testing Follow testing procedure

ATTENDANCE

Employee Name	Employee Signature	Employee Name	Employee Signature
Robert BeBault	Robert BeBault		
George Ingram			
Angel Castaneda	Angel Castaneda		
Jesus Mayer			
Felipe H.			
Lorenzo Tena	Lorenzo Tena		

Employee: Questions/Concerns/Responses/Issues:

Completed By: Print: Jerry Patton Sign: Jerry Patton

RMCI INC
GENERAL CONTRACTOR
NM LICENSE No. 31964

12/7/17

Foreman's Daily Diary & Huddle

Project # 1611	Project Name Groundwater Conveyance		Date 11-28-17
Project Superintendent Ed Hyde		Weather clear	Temperature 47°/60°

Site Safety Inspection :												
Competent Person	NA	☐	Yes	☑	No	☐	Rigging/ slings checked	NA	☑	Yes	☐	No ☐
Barricades	NA	☐	Yes	☑	No	☐	Fall protection tie off	NA	☑	Yes	☐	No ☐
Excavation flagged	NA	☐	Yes	☑	No	☐	Harness check	NA	☑	Yes	☐	No ☐
Shoring	NA	☐	Yes	☐	No	☑	Work area clean	NA	☐	Yes	☑	No ☐
Ladders checked	NA	☐	Yes	☑	No	☐	Fire Extinguishers	NA	☐	Yes	☑	No ☐
Spoils 2' back	NA	☐	Yes	☑	No	☐		NA	☐	Yes	☐	No ☐
Soil type A B C	NA	☐	Yes	☑	No	☐		NA	☐	Yes	☐	No ☐

Crew Summary: Forman: 1 Carps: Labs: 5 Oper: 1 Sub: Pipe layers: Others:

Productivity Topics Discussed (goals, work obstacles, materials, tools, equipment, etc.):

Continue work at vault on base
complete windrow cleanup

Production Summary & Status: Completed Subgrade for vault + took density test and passed with 96.7 and 15.1 moisture. Welded termination end and Tee on one pipe. Wait for EA to drain line to complete tie-in Dug up all Trees to prep for pipe tests.

Quality Control Issues/Concerns Discussed (from either the job or customer):

cleanup windrows 100%
Proper Grade with gravel for vault

Safety Hazards and Topics Discussed & Observations (Note Status also):

Proper trench safety
watch traffic

ATTENDANCE

Employee Name	Employee Signature	Employee Name	Employee Signature
George Ingram			
Robert Belbault			
Jesus Mayo			
Felipe			
Angel Castaneda			
Lorenzo Tena			

Employee: Questions/Concerns/Responses/Issues:

Completed By: Print: Jerry Patton Sign:

RMCI INC
GENERAL CONTRACTOR
NM LICENSE No 31964

Foreman's Daily Diary & Huddle

Project # 1611	Project Name Ground Water Conveyance		Date 9.25.17
Project Superintendent Ed Hyde		Weather Clear	Temperature 78°/51°

Site Safety Inspection :

Competent Person	NA	☒	Yes	☑	No	☐	Rigging/ slings checked	NA	☒	Yes	☐	No	☐
Barricades	NA	☒	Yes	☐	No	☐	Fall protection tie off	NA	☒	Yes	☐	No	☐
Excavation flagged	NA	☒	Yes	☐	No	☐	Harness check	NA	☒	Yes	☐	No	☐
Shoring	NA	☒	Yes	☐	No	☐	Work area clean	NA	☐	Yes	☒	No	☐
Ladders checked	NA	☒	Yes	☐	No	☐	Fire Extinguishers	NA	☐	Yes	☒	No	☐
Spoils 2' back	NA	☒	Yes	☐	No	☐		NA	☐	Yes	☐	No	☐
Soil type A B C	NA	☒	Yes	☐	No	☐		NA	☐	Yes	☐	No	☐

Crew Summary: Forman: 1 Carps: 5 Labs : 2 Oper: Sub: Pipe layers: Others:

Productivity Topics Discussed (goals, work obstacles, materials, tools, equipment, etc.):

Mobilization on site

Production Summary & Status:

Recieved L-120 Loader 200 excavator, 10 8X12' plates, 12 barrier walls From yard and 10 barriers from material Supply . unloaded all materials in work zone and Locked up Excavator 100% parked loader in office yard and locked it up 100%

Hours 7:00 Am to 5:00 Pm = 9.5

Quality Control Issues/Concerns Discussed (from either the job or customer):

Set up to protect Tools and equipment

Safety Hazards and Topics Discussed & Observations (Note Status also):

Stay out from under louds

ATTENDANCE

Employee Name	Employee Signature	Employee Name	Employee Signature
Felipe Hernandez	Felipe Hernandez		
Robert Bellard	Robert Bellard		

Employee: Questions/Concerns/Responses/Issues:

Completed By: Print: Jerry Parton Sign: Jerry Parton

RMCI INC
GENERAL CONTRACTOR
N.M. LICENSE No. 31954

Foreman's Daily Diary & Huddle

Project # 1611	Project Name Ground water Conveyance		Date 9-26-17
Project Superintendent Ed Hyde		Weather Partly Cloudy	Temperature 55°/75°

Site Safety Inspection :

Competent Person	NA ☒	Yes ☒	No ☐		Rigging/ slings checked	NA ☒	Yes ☐	No ☐
Barricades	NA ☒	Yes ☐	No ☐		Fall protection tie off	NA ☒	Yes ☐	No ☐
Excavation flagged	NA ☒	Yes ☐	No ☐		Harness check	NA ☒	Yes ☐	No ☐
Shoring	NA ☒	Yes ☐	No ☐		Work area clean	NA ☐	Yes ☒	No ☐
Ladders checked	NA ☒	Yes ☐	No ☐		Fire Extinguishers	NA ☐	Yes ☒	No ☐
Spoils 2' back	NA ☒	Yes ☐	No ☐			NA ☐	Yes ☐	No ☐
Soil type A B C	NA ☒	Yes ☐	No ☐			NA ☐	Yes ☐	No ☐
						NA ☐	Yes ☐	No ☐

Crew Summary: Forman: 1 Carps: Labs: 2 Oper: 1 Sub: Pipe layers: Others:

Productivity Topics Discussed (goals, work obstacles, materials, tools, equipment, etc.):

Continue mob

Production Summary & Status:

Recieved 48 barrier walls From Builders Supply Conex, Roller bucket from yard and water truck. Worked on yard Setup

Hrs 7:00 to 3:30 = 8

Quality Control Issues/Concerns Discussed (from either the job or customer):

Set up yard to protect tools and Equipment

Safety Hazards and Topics Discussed & Observations (Note Status also):

Stay out From under loads watch traffic when near street

ATTENDANCE

Employee Name	Employee Signature	Employee Name	Employee Signature
Felipe Hernandez	Felipe Hernandez		
Jesus Mora			
Robert DeBault			

Employee: Questions/Concerns/Responses/Issues:

Completed By: Print: Jerry Purton Sign:

RMCI INC
GENERAL CONTRACTOR
N.M. LICENSE No. 37954

Foreman's Daily Diary & Huddle

Project # 1611	Project Name Ground Water Conveyance		Date 9-27-18
Project Superintendent Ed Hyde		Weather Cloudy	Temperature 56°/64°

Site Safety Inspection :											
Competent Person	NA	☒	Yes	☒	No	☐	Rigging/ slings checked	NA	☒	Yes	☐	No	☐
Barricades	NA	☒	Yes	☐	No	☐	Fall protection tie off	NA	☒	Yes	☐	No	☐
Excavation flagged	NA	☒	Yes	☐	No	☐	Harness check	NA	☒	Yes	☐	No	☐
Shoring	NA	☒	Yes	☐	No	☐	Work area clean	NA	☐	Yes	☒	No	☐
Ladders checked	NA	☒	Yes	☐	No	☐	Fire Extinguishers	NA	☐	Yes	☒	No	☐
Spoils 2' back	NA	☒	Yes	☐	No	☐		NA	☐	Yes	☐	No	☐
Soil type A B C	NA	☒	Yes	☐	No	☐		NA	☐	Yes	☐	No	☐

Crew Summary: Forman: 1 Carps: Labs: 2 Oper: 1 Sub: Pipe layers: Others:

Productivity Topics Discussed (goals, work obstacles, materials, tools, equipment, etc.):

Finish Yard Setup Begin Stump removal

Production Summary & Status:

Completed barrier wall setup in yard to protect equipment
Began pulling tree stumps and made removal to Sta. 9+00

Quality Control Issues/Concerns Discussed (from either the Job or customer):

Watch roots in areas around power line

Safety Hazards and Topics Discussed & Observations (Note Status also):

Observe locates and watch for roots around same

ATTENDANCE

Employee Name	Employee Signature	Employee Name	Employee Signature
Robert BeBault	Robert BeBault		
Felipe Hernandez	Felipe Hernandez		
Jesus Moya	Jesus Moya		

Employee: Questions/Concerns/Responses/Issues:

Completed By: Print: Jerry Patton Sign: Jerry Patton

RMCI INC
GENERAL CONTRACTOR
N.M. LICENSE No. 31954

Foreman's Daily Diary & Huddle

Project # 1611	Project Name Ground Water Conveyance		Date 9-28-17
Project Superintendent Ed Hyde		Weather Cloudy	Temperature 51°/67

Site Safety Inspection :						Rigging/ slings checked	NA	☒	Yes	☐	No	☐
Competent Person	NA	☒	Yes	☑	No	☐	Fall protection tie off	NA	☒	Yes	☐	No	☐
Barricades	NA	☒	Yes	☐	No	☐	Harness check	NA	☒	Yes	☐	No	☐
Excavation flagged	NA	☒	Yes	☐	No	☐	Work area clean	NA	☐	Yes	☒	No	☐
Shoring	NA	☐	Yes	☐	No	☐	Fire Extinguishers	NA	☐	Yes	☑	No	☐
Ladders checked	NA	☒	Yes	☐	No	☐		NA	☐	Yes	☐	No	☐
Spoils 2' back	NA	☒	Yes	☐	No	☐		NA	☐	Yes	☐	No	☐
Soil type A B C	NA	☒	Yes	☐	No	☐		NA	☐	Yes	☐	No	☐

Crew Summary: Forman: 1 Carps: Labs : 2 Oper: 1 Sub: Pipe layers: Others:

Productivity Topics Discussed (goals, work obstacles, materials, tools, equipment, etc.):

Continue Stump removal

Production Summary & Status: continued Stump removal complete to Sta. 19+50 returned dump truck do not need. Cleanup conex to be able to get in and out

Quality Control Issues/Concerns Discussed (from either the job or customer):

Remove as many roots as possible when removing stumps

Safety Hazards and Topics Discussed & Observations (Note Status also):

Watch traffic observe excavator watch overhead power

ATTENDANCE

Employee Name	Employee Signature	Employee Name	Employee Signature
Marcos Tobar			
Jesus Maya			
Felipe Hernandez			
Robert BeBault			

Employee: Questions/Concerns/Responses/Issues:

Completed By: Print: Jerry Patton Sign:

RMCI INC
GENERAL CONTRACTOR
NM LICENSE No 31964

Foreman's Daily Diary & Huddle

Project # 1611	Project Name Ground Water Conveyance	Date 9-29-17
Project Superintendent Ed Hyde	Weather cloudy	Temperature 54°/65

Site Safety Inspection :

Competent Person	NA	☒	Yes	☑	No	☐	Rigging/ slings checked	NA	☒	Yes	☑	No	☐
Barricades	NA	☒	Yes	☐	No	☐	Fall protection tie off	NA	☒	Yes	☐	No	☐
Excavation flagged	NA	☒	Yes	☐	No	☐	Harness check	NA	☒	Yes	☐	No	☐
Shoring	NA	☒	Yes	☐	No	☐	Work area clean	NA	☐	Yes	☒	No	☐
Ladders checked	NA	☒	Yes	☐	No	☐	Fire Extinguishers	NA	☐	Yes	☒	No	☐
Spoils 2' back	NA	☒	Yes	☐	No	☐	_____	NA	☐	Yes	☐	No	☐
Soil type A B C	NA	☒	Yes	☐	No	☐	_____	NA	☐	Yes	☐	No	☐

Crew Summary: Forman: 1 Carps: Labs : 2 Oper: 1 Sub: Pipe layers: Others:

Productivity Topics Discussed (goals, work obstacles, materials, tools, equipment, etc.):

Complete Stump removal begin setting barrier walls along road

Production Summary & Status: Completed Stump removal to Ridgecrest crossing boor setup barrier walls From vault to Sta 2+50 (Track out pad)

Quality Control Issues/Concerns Discussed (from either the job or customer):

Set up barrier walls Properly remove as many roots as possible when removing stumps

Safety Hazards and Topics Discussed & Observations (Note Status also):

observe utility locates while removing Stumps

ATTENDANCE

Employee Name	Employee Signature	Employee Name	Employee Signature
Mark Costales			
Robert BeBault	Robert BeBault		
Felipe Hernandez	Felipe Hernandez		
Jesus Moya	Jesus Moya		

Employee: Questions/Concerns/Responses/Issues:

Completed By: Print: Jerry Patton Sign: Jerry Patton

RMCI INC
GENERAL CONTRACTOR
N.M. LICENSE No. 31984

By 10/9/17

Foreman's Daily Diary & Huddle

Project # 1611	Project Name Groundwater Conveyance		Date 10-2-17
Project Superintendent Ed Hyde		Weather Clear	Temperature 58° / 80°

Site Safety Inspection :						Rigging/ slings checked	NA	☒	Yes	☐	No	☐
Competent Person	NA	☒	Yes	☐	No	☐	Fall protection tie off	NA	☒	Yes	☐	No	☐
Barricades	NA	☒	Yes	☐	No	☐	Harness check	NA	☒	Yes	☐	No	☐
Excavation flagged	NA	☒	Yes	☐	No	☐	Work area clean	NA	☐	Yes	☒	No	☐
Shoring	NA	☒	Yes	☐	No	☐	Fire Extinguishers	NA	☐	Yes	☒	No	☐
Ladders checked	NA	☒	Yes	☐	No	☐		NA	☐	Yes	☐	No	☐
Spoils 2' back	NA	☒	Yes	☐	No	☐		NA	☐	Yes	☐	No	☐
Soil type A B C	NA	☒	Yes	☐	No	☐		NA	☐	Yes	☐	No	☐

Crew Summary: Forman: 1 Carps: Labs: 2 Oper: 1 Sub: Pipe layers: Others:

Productivity Topics Discussed (goals, work obstacles, materials, tools, equipment, etc.):

Test weld for Corp. Set barrier walls on east side of road

Production Summary & Status: Completed test weld for army corp and cut test strips EA Do band test. Met with Bixby ~~dot~~ was decided we will bore under Sewer line. Moved remaining barrier walls to east side of access road to prep for bore placed 3 joints of pipe to weld for this bore. Also laid out 5 Joints when we begin to dig trench

Quality Control Issues/Concerns Discussed (from either the Job or customer):

Set barrier walls correctly

Safety Hazards and Topics Discussed & Observations (Note Status also):

Stay out from under walls and watch pinch points

ATTENDANCE

Employee Name	Employee Signature	Employee Name	Employee Signature
Marcos Torres			
Robert BeBault			
Jesus Hoyos			
Felipe Herrera			

Employee: Questions/Concerns/Responses/Issues:

Completed By: Print: Jerry Patton Sign:

RMCI
GENERAL CONTRACTOR
NM LICENSE No. 31964

BJ 10/9/17

Foreman's Daily Diary & Huddle

Project # 1611	Project Name Groundwater Conveyance		Date 10-3-17
Project Superintendent Ed Hyde		Weather clear	Temperature 53°/81°

Site Safety Inspection :

Competent Person	NA	☒	Yes	☐	No	☐	Rigging/ slings checked	NA	☒	Yes	☐	No	☐
Barricades	NA	☒	Yes	☐	No	☐	Fall protection tie off	NA	☒	Yes	☐	No	☐
Excavation flagged	NA	☒	Yes	☐	No	☐	Harness check	NA	☒	Yes	☐	No	☐
Shoring	NA	☒	Yes	☐	No	☐	Work area clean	NA	☐	Yes	☒	No	☐
Ladders checked	NA	☒	Yes	☐	No	☐	Fire Extinguishers	NA	☐	Yes	☒	No	☐
Spoils 2' back	NA	☒	Yes	☐	No	☐		NA	☐	Yes	☐	No	☐
Soil type A B C	NA	☒	Yes	☐	No	☐		NA	☐	Yes	☐	No	☐

Crew Summary: Forman: 1 Carps: Labs : 3 Oper: 1 Sub: Pipe layers: Others:

Productivity Topics Discussed (goals, work obstacles, materials, tools, equipment, etc.):

Begin welding pipe for bores layout pipe at eastern bores

Production Summary & Status: welded 120' pipe together for Pull under SAS line at Sta 5435 moved pipe to to bore under Ridge crest to prepare to weld tomorrow. EA had dump truck on site to haul stumps off-site loaded truck 3 times takes 2.5 hours per trip

Quality Control Issues/Concerns Discussed (from either the job or customer):

weld ~~the~~ pipes correctly and proper length

Safety Hazards and Topics Discussed & Observations (Note Status also):

watch pinch points on welding machine use cave with heater

ATTENDANCE

Employee Name	Employee Signature	Employee Name	Employee Signature
MARCOS T			
Jesus Moya			
Robert Bobbitt			
Felipe Hernandez	Felipe Hernandez		

Employee: Questions/Concerns/Responses/Issues:

Completed By: Print: Jerry Patton Sign: Jerry Patton

RMCI INC
GENERAL CONTRACTOR
N.M. LICENSE No. 31964

PJ 10/9/17

Foreman's Daily Diary & Huddle

Project # 1611	Project Name Ground water Conveyance		Date 10-4-17
Project Superintendent Ed Hyde		Weather Cloudy	Temperature 67°/81°

Site Safety Inspection :

Competent Person	NA	☒	Yes	☐	No	☐	Rigging/ slings checked	NA	☒	Yes	☐	No	☐
Barricades	NA	☒	Yes	☐	No	☐	Fall protection tie off	NA	☒	Yes	☐	No	☐
Excavation flagged	NA	☒	Yes	☐	No	☐	Harness check	NA	☒	Yes	☐	No	☐
Shoring	NA	☒	Yes	☐	No	☐	Work area clean	NA	☐	Yes	☒	No	☐
Ladders checked	NA	☒	Yes	☐	No	☐	Fire Extinguishers	NA	☐	Yes	☒	No	☐
Spoils 2' back	NA	☒	Yes	☐	No	☐		NA	☐	Yes	☐	No	☐
Soil type A B C	NA	☒	Yes	☐	No	☐		NA	☐	Yes	☐	No	☐
								NA	☐	Yes	☐	No	☐

Crew Summary: Forman: 1 Carps: Labs: 3 Oper: 1 Sub: Pipe layers: Others:

Productivity Topics Discussed (goals, work obstacles, materials, tools, equipment, etc.):

Weld pipe at Ridgecrest Crossing move pipe For Bores on Northside of Ridgecrest for bores

Production Summary & Status: Completed welding of pipe For Ridgecrest crossing 120' of 4x6 containment pipe 100' of 4" conduit, 100' of 2" Conduit. Army Corp observed weld and Amy voiced concerns because slight imperfection appears in bead after welding. She wants test weld and pressure test to insure pipe will not leak, we cannot weld until test is completed. Will do test first thing tomorrow morning.

Quality Control Issues/Concerns Discussed (from either the job or customer):

Weld pipe properly and to proper length For bores

Safety Hazards and Topics Discussed & Observations (Note Status also):

watch pinch points and heater on welding machine

ATTENDANCE

Employee Name	Employee Signature	Employee Name	Employee Signature
MARCUS FOORS			
Robert BaBault			
Jesus Mayo			

Employee: Questions/Concerns/Responses/Issues:

Completed By: Print: Jerry Pearson Sign:

RMCI INC
GENERAL CONTRACTOR
NM LICENSE No 31964

10/9/17

Foreman's Daily Diary & Huddle

Project # 1611	Project Name Groundwater Conveyance		Date 10-5-17
Project Superintendent Ed Hyde		Weather cloudy	Temperature 62°/ 74°

Site Safety Inspection :						Rigging/ slings checked	NA ☒	Yes ☐	No ☐
Competent Person	NA ☒	Yes ☐	No ☐			Fall protection tie off	NA ☒	Yes ☐	No ☐
Barricades	NA ☒	Yes ☐	No ☐			Harness check	NA ☒	Yes ☐	No ☐
Excavation flagged	NA ☒	Yes ☐	No ☐			Work area clean	NA ☐	Yes ☒	No ☐
Shoring	NA ☒	Yes ☐	No ☐			Fire Extinguishers	NA ☐	Yes ☒	No ☐
Ladders checked	NA ☒	Yes ☐	No ☐				NA ☐	Yes ☐	No ☐
Spoils 2' back	NA ☒	Yes ☐	No ☐				NA ☐	Yes ☐	No ☐
Soil type A B C	NA ☒	Yes ☐	No ☐				NA ☐	Yes ☐	No ☐

Crew Summary: Forman: 1 Carps: Labs : 3 Oper: 1 Sub: Pipe layers: Others:

Productivity Topics Discussed (goals, work obstacles, materials, tools, equipment, etc.):

Do test weld and Air test For Army Corp. Layout pipe for Bores on North side of Ridge crest.

Production Summary & Status: Completed and passed Pressure test for Army Corp. Loaded stumps out. Placed needed pipe at all bore sites including on base using Monty to haul pipe after unloading backhoe. NO pipe welding due to length of time used to do pipe test

Quality Control Issues/Concerns Discussed (from either the job or customer):

weld and preform 5# air test weld properly

Safety Hazards and Topics Discussed & Observations (Note Status also):

Only required people in area For test. Stay out of From under Loads

ATTENDANCE

Employee Name	Employee Signature	Employee Name	Employee Signature
Robert Bobbitt / MARCOS TOVAR			
Jesus Mayo / Felipe Hernandez			

Employee: Questions/Concerns/Responses/Issues:

Completed By: Print: Sign:

RMCI INC
GENERAL CONTRACTOR
N.M. LICENSE No. 31964

By 10/4/17

Foreman's Daily Diary & Huddle

Project # 1611	Project Name Ground water Convegance		Date 10-6-17
Project Superintendent Ed Hyde		Weather Cloudy / Clear PM	Temperature 62°/77°

Site Safety Inspection :													
Competent Person	NA	☒	Yes	☐	No	☐	Rigging/ slings checked	NA	☒	Yes	☐	No	☐
Barricades	NA	☒	Yes	☐	No	☐	Fall protection tie off	NA	☒	Yes	☐	No	☐
Excavation flagged	NA	☒	Yes	☐	No	☐	Harness check	NA	☒	Yes	☐	No	☐
Shoring	NA	☒	Yes	☐	No	☐	Work area clean	NA	☐	Yes	☒	No	☐
Ladders checked	NA	☒	Yes	☐	No	☐	Fire Extinguishers	NA	☐	Yes	☒	No	☐
Spoils 2' back	NA	☒	Yes	☐	No	☐		NA	☐	Yes	☐	No	☐
Soil type A B C	NA	☒	Yes	☐	No	☐		NA	☐	Yes	☐	No	☐

Crew Summary: Forman: 1 Carps: Labs : 3 Oper: 1 Sub: Pipe layers: Others:

Productivity Topics Discussed (goals, work obstacles, materials, tools, equipment, etc.):

Continue welding small diameter conduit at bores

Production Summary & Status: Completed all small diameter conduit For next 2 bores Met with Tyler and Kevin with Ed and Phillip about power line running with water line at our tie-in point which does not show on plans and will interfere with vault placement

Quality Control Issues/Concerns Discussed (from either the job or customer):

make proper welds and proper lengths for bores

Safety Hazards and Topics Discussed & Observations (Note Status also):

watch pinche points and Heater while welding

ATTENDANCE

Employee Name	Employee Signature	Employee Name	Employee Signature
Felipe Hernandez	Felipe Hernandez		
MARCOS TORRES			
Robert BeBout	Robert BeBout		
Jesus Moya	Jesus Moya		

Employee: Questions/Concerns/Responses/Issues:

Completed By: Print: Jerry Patton Sign: Jerry Patton

TSR Drill Report
2610 Ridgecrest Drive SE

Job Information

Name:	2610 Ridgecrest Drive SE
Date:	Mon Oct 16 03:55:50 2017
Operators:	Manny & Jasper
Elevation Start:	0" ft in
Elevation End:	0" ft in
Heading:	264.0 degrees
GPS Start:	
GPS End:	
Bore Length:	111' 0" ft in
Pipe Count:	11
Pipe Length:	10' 0" ft in
First Pipe:	6' 0" ft in
Last Pipe:	5' 0" ft in
Comments:	

Client Information

Name:	RMCI, Inc.
Phone:	(505) 345-0008
Address:	6211 Chappell Road NE
City/Zip:	Albuquerque, New Mexico 87113

Contractor Information

Name:	Bixby Electric, Inc.
Phone:	(505) 842-5384
Address:	521 Wheeler SE
City/Zip:	Albuquerque, New Mexico 87102

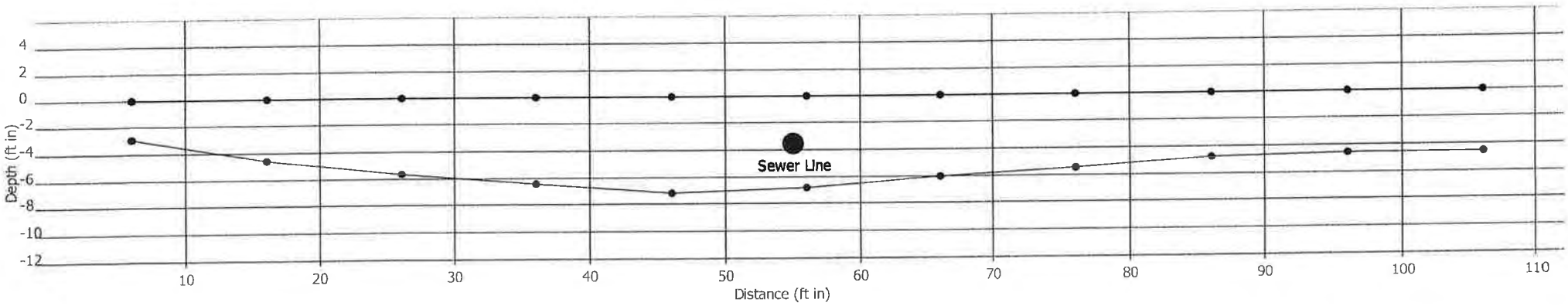

TSR Drill Report
2610 Ridgecrest Drive SE

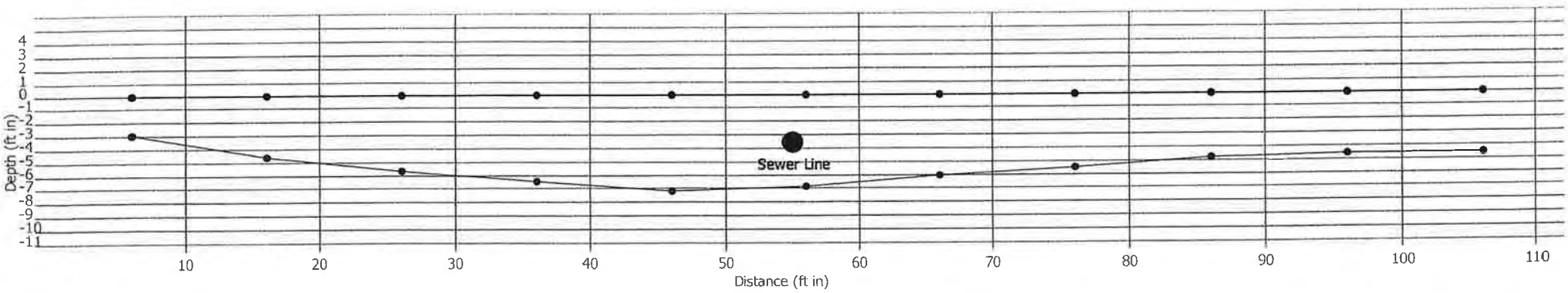

TSR Drill Report
2610 Ridgecrest Drive SE

Pipe List

Drill Pipe	Distance (ft in)	Pitch (%)	Depth (ft in)	GPS Latitude	GPS Longitude	GPS Elevation (ft in)	Heading (degrees)	Comments
√ 1	6' 0"	-31.8	2' 11"	0.00000000	0.00000000	0"	264.0	√
√ 2	16' 0"	-18.3	4' 7"	0.00000000	0.00000000	0"	261.0	√
√ 3	26' 0"	-11.7	5' 8"	0.00000000	0.00000000	0"	269.0	√
√ 4	36' 0"	-7.3	6' 5"	0.00000000	0.00000000	0"	268.0	√
√ 5	46' 0"	-8.1	7' 2"	0.00000000	0.00000000	0"	265.0	√
√ 6	56' 0"	4.3	6' 10"	0.00000000	0.00000000	0"	268.0	√
√ 7	66' 0"	6.6	6' 0"	0.00000000	0.00000000	0"	270.0	√
√ 8	76' 0"	8.6	5' 5"	0.00000000	0.00000000	0"	270.0	√
√ 9	86' 0"	5.4	4' 9"	0.00000000	0.00000000	0"	269.0	√
√ 10	96' 0"	1.6	4' 6"	0.00000000	0.00000000	0"	273.0	√
√ 11	106' 0"	1.6	4' 6"	0.00000000	0.00000000	0"	270.0	√

Obstacle List

Name	Distance (ft in)	Depth (ft in)	Size (in)	Comments
Sewer Line	55' 0"	3' 6"	18	

DRIVER'S VEHICLE INSPECTION REPORT

AS REQUIRED BY THE D.O.T. FEDERAL MOTOR CARRIER SAFETY REGULATIONS

CARRIER: RMCI

ADDRESS: 6211 chappell rd tlb N.M

DATE: 9-26-17 TIME: _____ A.M. 12:30 P.M.

CHECK ANY DEFECTIVE ITEM AND GIVE DETAILS UNDER "REMARKS"

TRACTOR/ TRUCK NO. 2763 ODOMETER READING 498464

- ☐ Air Compressor
- ☐ Air Lines
- ☐ Battery
- ☐ Belts and Hoses
- ☐ Body
- ☐ Brake Accessories
- ☐ Brakes, Parking
- ☐ Brakes, Service
- ☐ Clutch
- ☑ Coupling Devices
- ☐ Defroster/Heater
- ☐ Drive Line
- ☐ Engine
- ☐ Exhaust
- ☑ Fifth Wheel
- ☐ Fluid Levels
- ☐ Frame and Assembly
- ☐ Front Axle
- ☐ Fuel Tanks
- ☐ Horn
- ☐ Lights
  - Head/Stop
  - Tail/Dash
  - Turn Indicators
  - Clearance/Marker
- ☐ Mirrors
- ☐ Muffler
- ☐ Oil Pressure
- ☐ Radiator
- ☐ Rear End
- ☐ Reflectors
- ☐ Safety Equipment
  - Fire Extinguisher
  - Flags/Flares/Fusees
  - Reflective Triangles
  - Spare Bulbs and Fuses
  - Spare Seal Beam
- ☐ Starter
- ☐ Steering
- ☐ Suspension System
- ☑ Tire Chains
- ☐ Tires
- ☐ Transmission
- ☑ Trip Recorder
- ☐ Wheels and Rims
- ☐ Windows
- ☐ Windshield Wipers
- ☐ Other

TRAILER(S) NO.(S) —

- ☐ Brake Connections
- ☐ Brakes
- ☐ Coupling Devices
- ☐ Coupling (King) Pin
- ☐ Doors
- ☐ Hitch
- ☐ Landing Gear
- ☐ Lights - All
- ☐ Reflectors/Reflective Tape
- ☐ Roof
- ☐ Suspension System
- ☐ Tarpaulin
- ☐ Tires
- ☐ Wheels and Rims
- ☐ Other

Remarks: _____

☑ CONDITION OF THE ABOVE VEHICLE IS SATISFACTORY

DRIVER'S SIGNATURE: Randy Rebollar

☐ ABOVE DEFECTS CORRECTED

☐ ABOVE DEFECTS NEED NOT BE CORRECTED FOR SAFE OPERATION OF VEHICLE

MECHANIC'S SIGNATURE: _____ DATE: _____

DRIVER'S SIGNATURE: _____ DATE: _____

ORIGINAL

© Copyright 2012 J. J. KELLER & ASSOCIATES, INC.®, Neenah, WI
USA • (800) 327-6868 • Printed in the United States

1862

DRIVER'S VEHICLE INSPECTION REPORT

AS REQUIRED BY THE D.O.T. FEDERAL MOTOR CARRIER SAFETY REGULATIONS

CARRIER: RMCI

ADDRESS: 6211 Coppell Road, Albuquerque, NM

DATE: 26 Sep 2017 TIME: 0600 A.M. _____ P.M.

CHECK ANY DEFECTIVE ITEM AND GIVE DETAILS UNDER "REMARKS"

TRACTOR/ TRUCK NO. 4610 ODOMETER READING 496451

- ☐ Air Compressor
- ☐ Air Lines
- ☐ Battery
- ☐ Belts and Hoses
- ☐ Body
- ☐ Brake Accessories
- ☐ Brakes, Parking
- ☐ Brakes, Service
- ☐ Clutch
- ☐ Coupling Devices
- ☐ Defroster/Heater
- ☐ Drive Line
- ☐ Engine
- ☐ Exhaust
- ☐ Fifth Wheel
- ☐ Fluid Levels
- ☐ Frame and Assembly
- ☐ Front Axle
- ☐ Fuel Tanks
- ☐ Horn
- ☐ Lights
  - Head/Stop
  - Tail/Dash
  - Turn Indicators
  - Clearance/Marker
- ☐ Mirrors
- ☐ Muffler
- ☐ Oil Pressure
- ☐ Radiator
- ☐ Rear End
- ☐ Reflectors
- ☐ Safety Equipment
  - Fire Extinguisher
  - Flags/Flares/Fusees
  - Reflective Triangles
  - Spare Bulbs and Fuses
  - Spare Seal Beam
- ☐ Starter
- ☐ Steering
- ☐ Suspension System
- ☐ Tire Chains
- ☐ Tires
- ☐ Transmission
- ☐ Trip Recorder
- ☐ Wheels and Rims
- ☐ Windows
- ☐ Windshield Wipers
- ☐ Other

TRAILER(S) NO.(S) Ø

- ☐ Brake Connections
- ☐ Brakes
- ☐ Coupling Devices
- ☐ Coupling (King) Pin
- ☐ Doors
- ☐ Hitch
- ☐ Landing Gear
- ☐ Lights - All
- ☐ Reflectors/Reflective Tape
- ☐ Roof
- ☐ Suspension System
- ☐ Tarpaulin
- ☐ Tires
- ☐ Wheels and Rims
- ☐ Other

Remarks: _____

☑ CONDITION OF THE ABOVE VEHICLE IS SATISFACTORY

DRIVER'S SIGNATURE: Monte Fielding

☐ ABOVE DEFECTS CORRECTED

☐ ABOVE DEFECTS NEED NOT BE CORRECTED FOR SAFE OPERATION OF VEHICLE

MECHANIC'S SIGNATURE: _____ DATE: _____

DRIVER'S SIGNATURE: _____ DATE: _____

ORIGINAL

© Copyright 2012 J. J. KELLER & ASSOCIATES, INC.®, Neenah, WI
USA • (800) 327-6868 • Printed in the United States

1862

DRIVER'S VEHICLE INSPECTION REPORT

AS REQUIRED BY THE D.O.T. FEDERAL MOTOR CARRIER SAFETY REGULATIONS

CARRIER: RMCT

ADDRESS: 6211 chappell rd Alb n.m

DATE: 9-27-17 TIME: 8:45 A.M. ____ P.M.

CHECK ANY DEFECTIVE ITEM AND GIVE DETAILS UNDER "REMARKS" 2765

TRACTOR/ TRUCK NO. 4610 ODOMETER READING 498467.

- ☐ Air Compressor
- ☐ Air Lines
- ☐ Battery
- ☐ Belts and Hoses
- ☐ Body
- ☐ Brake Accessories
- ☐ Brakes, Parking
- ☐ Brakes, Service
- ☐ Clutch
- ☑ Coupling Devices
- ☐ Defroster/Heater
- ☐ Drive Line
- ☐ Engine
- ☐ Exhaust
- ☑ Fifth Wheel
- ☐ Fluid Levels
- ☐ Frame and Assembly
- ☐ Front Axle
- ☐ Fuel Tanks
- ☐ Horn
- ☐ Lights
  - Head/Stop
  - Tail/Dash
  - Turn Indicators
  - Clearance/Marker
- ☐ Mirrors
- ☐ Muffler
- ☐ Oil Pressure
- ☐ Radiator
- ☐ Rear End
- ☐ Reflectors
- ☐ Safety Equipment
  - Fire Extinguisher
  - Flags/Flares/Fusees
  - Reflective Triangles
  - Spare Bulbs and Fuses
  - Spare Seal Beam
- ☐ Starter
- ☐ Steering
- ☐ Suspension System
- ☑ Tire Chains
- ☐ Tires
- ☐ Transmission
- ☑ Trip Recorder
- ☐ Wheels and Rims
- ☐ Windows
- ☐ Windshield Wipers
- ☐ Other

TRAILER(S) NO.(S) ~~_____~~

- ☐ Brake Connections
- ☐ Brakes
- ☐ Coupling Devices
- ☐ Coupling (King) Pin
- ☐ Doors
- ☐ Hitch
- ☐ Landing Gear
- ☐ Lights - All
- ☐ Reflectors/Reflective Tape
- ☐ Roof
- ☐ Suspension System
- ☐ Tarpaulin
- ☐ Tires
- ☐ Wheels and Rims
- ☐ Other

Remarks: _____

☑ CONDITION OF THE ABOVE VEHICLE IS SATISFACTORY

DRIVER'S SIGNATURE: Ralf Rebollo

☐ ABOVE DEFECTS CORRECTED

☐ ABOVE DEFECTS NEED NOT BE CORRECTED FOR SAFE OPERATION OF VEHICLE

MECHANIC'S SIGNATURE: _____ DATE: _____

DRIVER'S SIGNATURE: _____ DATE: _____

ORIGINAL

© Copyright 2012 J. J. KELLER & ASSOCIATES, INC.®, Neenah, WI
USA • (800) 327-6868 • Printed in the United States

1862

DRIVER'S VEHICLE INSPECTION REPORT

AS REQUIRED BY THE D.O.T. FEDERAL MOTOR CARRIER SAFETY REGULATIONS

CARRIER: RMCI

ADDRESS: 6211 chappell rd Alb N.M

DATE: 9-28-12 TIME: 7:30 A.M. _____ P.M.

CHECK ANY DEFECTIVE ITEM AND GIVE DETAILS UNDER "REMARKS" 2771

TRACTOR/ TRUCK NO. 4610 ODOMETER READING _____

- ☐ Air Compressor
- ☐ Air Lines
- ☐ Battery
- ☐ Belts and Hoses
- ☐ Body
- ☐ Brake Accessories
- ☐ Brakes, Parking
- ☐ Brakes, Service
- ☐ Clutch
- ☑ Coupling Devices
- ☐ Defroster/Heater
- ☐ Drive Line
- ☐ Engine
- ☐ Exhaust
- ☑ Fifth Wheel
- ☐ Fluid Levels
- ☐ Frame and Assembly
- ☐ Front Axle
- ☐ Fuel Tanks
- ☐ Horn
- ☐ Lights
  - Head/Stop
  - Tail/Dash
  - Turn Indicators
  - Clearance/Marker
- ☐ Mirrors
- ☐ Muffler
- ☐ Oil Pressure
- ☐ Radiator
- ☐ Rear End
- ☐ Reflectors
- ☐ Safety Equipment
  - Fire Extinguisher
  - Flags/Flares/Fusees
  - Reflective Triangles
  - Spare Bulbs and Fuses
  - Spare Seal Beam
- ☐ Starter
- ☐ Steering
- ☐ Suspension System
- ☑ Tire Chains
- ☐ Tires
- ☐ Transmission
- ☑ Trip Recorder
- ☐ Wheels and Rims
- ☐ Windows
- ☐ Windshield Wipers
- ☐ Other

TRAILER(S) NO.(S) _____

- ☐ Brake Connections
- ☐ Brakes
- ☐ Coupling Devices
- ☐ Coupling (King) Pin
- ☐ Doors
- ☐ Hitch
- ☐ Landing Gear
- ☐ Lights - All
- ☐ Reflectors/Reflective Tape
- ☐ Roof
- ☐ Suspension System
- ☐ Tarpaulin
- ☐ Tires
- ☐ Wheels and Rims
- ☐ Other

Remarks: _____

☑ CONDITION OF THE ABOVE VEHICLE IS SATISFACTORY

DRIVER'S SIGNATURE: _____

☐ ABOVE DEFECTS CORRECTED

☐ ABOVE DEFECTS NEED NOT BE CORRECTED FOR SAFE OPERATION OF VEHICLE

MECHANIC'S SIGNATURE: _____ DATE: _____

DRIVER'S SIGNATURE: _____ DATE: _____

ORIGINAL

© Copyright 2012 J. J. KELLER & ASSOCIATES, INC.®, Neenah, WI
USA • (800) 327-6868 • Printed in the United States

RMCI INC
GENERAL CONTRACTOR

IFTA / IRP / WEIGHT DISTANCE POWER UNIT TRIP HAUL TICKET

EQUIPMENT / MATERIAL HAUL TICKET

MUST FILL OUT MILES / HRS. OF EQUIPMENT BEING HAULED

PO BOX 91447
Albuquerque, NM 87199
(505) 345-0008
(505) 345-0111 Fax

DATE: 9-26-17

Dispatch Location: 1611
Pickup Location: 1611
Delivery Location: 1611
Return Location: 1611
Vehicle/Trailer Used: 4610

Shop/Maintenance Transport ☐
Vendor Transport ☐
Job Transport ☐

Time Start: 12:30 pm
Breakfast/Lunch/Dinner:
Time End: 3:00 pm
Total Time: 2.5
NM Start Mileage: 498464
NM End Mileage: 498467
Total NM Miles: 3
Out of State Start Mileage: —
Out of State Return Mileage: —
Total Out of State Miles: —

Trip Origin (Latitude/Longitude):
Trip Destination (Latitude/Longitude):

EQUIPMENT / MATERIAL HAULED		MUST FILL OUT MILES / HRS. OF EQUIPMENT BEING HAULED		
UNIT	MODEL / MATERIAL	MILES	HOURS	ACCESSORIES
4610	Tarmac Water	3	2.5	1 load s

Route of Travel: Jobsite

Fuel Purchase (Name & Address):

Number of Gallons:

Price Per Gallon:
Total Amount of Sale:
Purchaser (Name & Address):

Fuel Type:

DELIVERY / LOAD INSTRUCTIONS

1:00 pm

Start 09809.5
End 09814.0

Received By:

Robert BeBout
Signature

Robert BeBout
Print Name

9-26-17
Date

RMCI INC
GENERAL CONTRACTOR

IFTA / IRP / WEIGHT DISTANCE POWER UNIT TRIP HAUL TICKET

EQUIPMENT / MATERIAL HAUL TICKET

MUST FILL OUT MILES / HRS. OF EQUIPMENT BEING HAULED

PO BOX 91447
Albuquerque, NM 87199
(505) 345-0008
(505) 345-0111 Fax

DATE: 9-27-16

Dispatch Location: 1611
Pickup Location: 1611
Delivery Location: 1611
Return Location: 1611
Vehicle/Trailer Used: 4610

Shop/Maintenance Transport ☐
Vendor Transport ☐
Job Transport ☐

Time Start: 8:45
Breakfast/Lunch/Dinner: 1/2
Time End: 3:30
Total Time: 6.25
NM Start Mileage: 498467
NM End Mileage: 498470
Total NM Miles: 3
Out of State Start Mileage: —
Out of State Return Mileage: —
Total Out of State Miles: —

Trip Origin (Latitude/Longitude):
Trip Destination (Latitude/Longitude):

EQUIPMENT / MATERIAL HAULED		MUST FILL OUT MILES / HRS. OF EQUIPMENT BEING HAULED		
UNIT	MODEL / MATERIAL	MILES	HOURS	ACCESSORIES
4610	Internat water	3	6.25	loads

Route of Travel: Job site

Fuel Purchase (Name & Address):

Number of Gallons:

Price Per Gallon:
Total Amount of Sale:
Purchaser (Name & Address):

Fuel Type:

DELIVERY / LOAD INSTRUCTIONS	Start 09814.0
8:50	09818.3
12:37	09821.2

Received By:

Robert BeBault
Signature

Robert BeBault
Print Name

9-27-17
Date

RMCI INC
GENERAL CONTRACTOR

IFTA / IRP / WEIGHT DISTANCE POWER UNIT TRIP HAUL TICKET

EQUIPMENT / MATERIAL HAUL TICKET

MUST FILL OUT MILES / HRS. OF EQUIPMENT BEING HAULED

PO BOX 91447
Albuquerque, NM 87199
(505) 345-0008
(505) 345-0111 Fax

DATE: 9-28-17

Dispatch Location: 1611
Pickup Location: 1611
Delivery Location: 1611
Return Location: 1611
Vehicle/Trailer Used: 4610

Shop/Maintenance Transport ☐
Vendor Transport ☐
Job Transport ☐

Time Start: 7:30
Breakfast/Lunch/Dinner: 1/2
Time End: 2:30
Total Time: 6.5
NM Start Mileage: 498470
NM End Mileage: 498476
Total NM Miles: 6
Out of State Start Mileage: —
Out of State Return Mileage: —
Total Out of State Miles: —

Trip Origin (Latitude/Longitude):
Trip Destination (Latitude/Longitude):

EQUIPMENT / MATERIAL HAULED		MUST FILL OUT MILES / HRS. OF EQUIPMENT BEING HAULED		
UNIT	MODEL / MATERIAL	MILES	HOURS	ACCESSORIES
4610	International/ water	6	6.5	3 loads

Route of Travel: Jobsite

Fuel Purchase (Name & Address):

Number of Gallons:

Price Per Gallon:
Total Amount of Sale:
Purchaser (Name & Address):

Fuel Type:

DELIVERY / LOAD INSTRUCTIONS	start 09821.2
7:30 Am	09825.5
10:50 Am	09828.1
12:30 pm	09830.2

Received By:

Robert BeBault
Signature

Robert BeBault
Print Name

9-28-17
Date

DRIVER'S VEHICLE INSPECTION REPORT

AS REQUIRED BY THE D.O.T. FEDERAL MOTOR CARRIER SAFETY REGULATIONS

CARRIER: RMCI

ADDRESS: 6211 chappell rd Alb N.M

DATE: 10-2-17 TIME: 7:00 A.M. _____ P.M.

CHECK ANY DEFECTIVE ITEM AND GIVE DETAILS UNDER "REMARKS" 2777

TRACTOR/ TRUCK NO. 4610 ODOMETER READING 498476

- ☐ Air Compressor
- ☐ Air Lines
- ☐ Battery
- ☐ Belts and Hoses
- ☐ Body
- ☐ Brake Accessories
- ☐ Brakes, Parking
- ☐ Brakes, Service
- ☐ Clutch
- ☑ Coupling Devices
- ☐ Defroster/Heater
- ☐ Drive Line
- ☐ Engine
- ☐ Exhaust
- ☑ Fifth Wheel
- ☐ Fluid Levels
- ☐ Frame and Assembly
- ☐ Front Axle
- ☐ Fuel Tanks
- ☐ Horn
- ☐ Lights
  - Head/Stop
  - Tail/Dash
  - Turn Indicators
  - Clearance/Marker
- ☐ Mirrors
- ☐ Muffler
- ☐ Oil Pressure
- ☐ Radiator
- ☐ Rear End
- ☐ Reflectors
- ☐ Safety Equipment
  - Fire Extinguisher
  - Flags/Flares/Fusees
  - Reflective Triangles
  - Spare Bulbs and Fuses
  - Spare Seal Beam
- ☑ Starter
- ☐ Steering
- ☐ Suspension System
- ☑ Tire Chains
- ☐ Tires
- ☐ Transmission
- ☑ Trip Recorder
- ☐ Wheels and Rims
- ☐ Windows
- ☐ Windshield Wipers
- ☐ Other

TRAILER(S) NO.(S) ~~_____~~

- ☐ Brake Connections
- ☐ Brakes
- ☐ Coupling Devices
- ☐ Coupling (King) Pin
- ☐ Doors
- ☐ Hitch
- ☐ Landing Gear
- ☐ Lights - All
- ☐ Reflectors/Reflective Tape
- ☐ Roof
- ☐ Suspension System
- ☐ Tarpaulin
- ☐ Tires
- ☐ Wheels and Rims
- ☐ Other

Remarks: Starter not engaging all the time

☑ CONDITION OF THE ABOVE VEHICLE IS SATISFACTORY

DRIVER'S SIGNATURE: Robert Bebout

☐ ABOVE DEFECTS CORRECTED

☐ ABOVE DEFECTS NEED NOT BE CORRECTED FOR SAFE OPERATION OF VEHICLE

MECHANIC'S SIGNATURE: _____ DATE: _____

DRIVER'S SIGNATURE: _____ DATE: _____

ORIGINAL

© Copyright 2012 J. J. KELLER & ASSOCIATES, INC.®, Neenah, WI
USA • (800) 327-6868 • Printed in the United States

1862

DRIVER'S VEHICLE INSPECTION REPORT

AS REQUIRED BY THE D.O.T. FEDERAL MOTOR CARRIER SAFETY REGULATIONS

CARRIER: RMCT

ADDRESS: 6211 chappell rd Alb N.M

DATE: 10-4-17 TIME: 7:30 A.M. _____ P.M.

CHECK ANY DEFECTIVE ITEM AND GIVE DETAILS UNDER "REMARKS" 2779

TRACTOR/ TRUCK NO. 4610 ODOMETER READING 498478

- ☐ Air Compressor
- ☐ Air Lines
- ☐ Battery
- ☐ Belts and Hoses
- ☐ Body
- ☐ Brake Accessories
- ☐ Brakes, Parking
- ☐ Brakes, Service
- ☐ Clutch
- ☑ Coupling Devices
- ☐ Defroster/Heater
- ☐ Drive Line
- ☐ Engine
- ☐ Exhaust
- ☑ Fifth Wheel
- ☐ Fluid Levels
- ☐ Frame and Assembly
- ☐ Front Axle
- ☐ Fuel Tanks
- ☐ Horn
- ☐ Lights
  - Head/Stop
  - Tail/Dash
  - Turn Indicators
  - Clearance/Marker
- ☐ Mirrors
- ☐ Muffler
- ☐ Oil Pressure
- ☐ Radiator
- ☐ Rear End
- ☐ Reflectors
- ☐ Safety Equipment
  - Fire Extinguisher
  - Flags/Flares/Fusees
  - Reflective Triangles
  - Spare Bulbs and Fuses
  - Spare Seal Beam
- ☐ Starter
- ☐ Steering
- ☐ Suspension System
- ☑ Tire Chains
- ☐ Tires
- ☐ Transmission
- ☑ Trip Recorder
- ☐ Wheels and Rims
- ☐ Windows
- ☐ Windshield Wipers
- ☐ Other

TRAILER(S) NO.(S) —

- ☐ Brake Connections
- ☐ Brakes
- ☐ Coupling Devices
- ☐ Coupling (King) Pin
- ☐ Doors
- ☐ Hitch
- ☐ Landing Gear
- ☐ Lights - All
- ☐ Reflectors/Reflective Tape
- ☐ Roof
- ☐ Suspension System
- ☐ Tarpaulin
- ☐ Tires
- ☐ Wheels and Rims
- ☐ Other

Remarks: _____

☑ CONDITION OF THE ABOVE VEHICLE IS SATISFACTORY

DRIVER'S SIGNATURE: _____

☐ ABOVE DEFECTS CORRECTED

☐ ABOVE DEFECTS NEED NOT BE CORRECTED FOR SAFE OPERATION OF VEHICLE

MECHANIC'S SIGNATURE: _____ DATE: _____

DRIVER'S SIGNATURE: _____ DATE: _____

ORIGINAL

© Copyright 2012 J. J. KELLER & ASSOCIATES, INC.®, Neenah, WI
USA • (800) 327-6868 • Printed in the United States

RMCI INC
GENERAL CONTRACTOR

IFTA / IRP / WEIGHT DISTANCE POWER UNIT TRIP HAUL TICKET

EQUIPMENT / MATERIAL HAUL TICKET

MUST FILL OUT MILES / HRS. OF EQUIPMENT BEING HAULED

PO BOX 91447
Albuquerque, NM 87199
(505) 345-0008
(505) 345-0111 Fax

DATE: 10-2-17

Dispatch Location: 1611
Pickup Location: 1611
Delivery Location: 1611
Return Location: 1611
Vehicle/Trailer Used: 4610

Shop/Maintenance Transport ☐
Vendor Transport ☐
Job Transport ☐

Time Start: 7:00
Breakfast/Lunch/Dinner: 1/2
Time End: 3:30
Total Time: 8
NM Start Mileage: 498476
NM End Mileage: 498478
Total NM Miles: 2
Out of State Start Mileage: —
Out of State Return Mileage: —
Total Out of State Miles: —

Trip Origin (Latitude/Longitude):
Trip Destination (Latitude/Longitude):

EQUIPMENT / MATERIAL HAULED		MUST FILL OUT MILES / HRS. OF EQUIPMENT BEING HAULED		
UNIT	MODEL / MATERIAL	MILES	HOURS	ACCESSORIES
4610	Interrant water	2	8	1 loads

Route of Travel: Jobsite

Fuel Purchase (Name & Address):

Number of Gallons:

Price Per Gallon:
Total Amount of Sale:
Purchaser (Name & Address):

Fuel Type:

DELIVERY / LOAD INSTRUCTIONS start 09830.2
7:15 AM 09834.6

Received By:

Robert Belbault
Signature

Robert Belbault
Print Name

10-2-17
Date

RMCI INC
GENERAL CONTRACTOR

IFTA / IRP / WEIGHT DISTANCE POWER UNIT TRIP HAUL TICKET

EQUIPMENT / MATERIAL HAUL TICKET

MUST FILL OUT MILES / HRS. OF EQUIPMENT BEING HAULED

PO BOX 91447
Albuquerque, NM 87199
(505) 345-0008
(505) 345-0111 Fax

DATE: 10-4-17

Dispatch Location: 1611
Pickup Location: 1611
Delivery Location: 1611
Return Location: 1611
Vehicle/Trailer Used: 4610

Shop/Maintenance Transport ☐
Vendor Transport ☐
Job Transport ☐

Time Start: 7:30
Breakfast/Lunch/Dinner: ½
Time End: 3:30
Total Time: 7.5
NM Start Mileage: 498478
NM End Mileage: 498479
Total NM Miles: 1
Out of State Start Mileage: —
Out of State Return Mileage: —
Total Out of State Miles: —

Trip Origin (Latitude/Longitude):
Trip Destination (Latitude/Longitude):

EQUIPMENT / MATERIAL HAULED		MUST FILL OUT MILES / HRS. OF EQUIPMENT BEING HAULED		
UNIT	MODEL / MATERIAL	MILES	HOURS	ACCESSORIES
4610	International water	1	7.5	1 loads

Route of Travel: Jobsite

Fuel Purchase (Name & Address):

Number of Gallons:

Price Per Gallon:
Total Amount of Sale:
Purchaser (Name & Address):

Fuel Type:

DELIVERY / LOAD INSTRUCTIONS Start 09834.6
7:40 AM 09839.0

Received By:

Signature

Robert BeBault
Print Name

10-9-17
Date

DRIVER'S VEHICLE INSPECTION REPORT

AS REQUIRED BY THE D.O.T. FEDERAL MOTOR CARRIER SAFETY REGULATIONS

CARRIER: RMCT

ADDRESS: 6211 chappell rd Alb n.m

DATE: 10-10-17 TIME: 8:30 A.M. _____ P.M

CHECK ANY DEFECTIVE ITEM AND GIVE DETAILS UNDER "REMARKS" 2781

TRACTOR/ TRUCK NO. _____ ODOMETER READING 498479

- ☐ Air Compressor
- ☐ Air Lines
- ☐ Battery
- ☐ Belts and Hoses
- ☐ Body
- ☐ Brake Accessories
- ☐ Brakes, Parking
- ☐ Brakes, Service
- ☐ Clutch
- ☑ Coupling Devices
- ☐ Defroster/Heater
- ☐ Drive Line
- ☐ Engine
- ☐ Exhaust
- ☑ Fifth Wheel
- ☐ Fluid Levels
- ☐ Frame and Assembly
- ☐ Front Axle
- ☐ Fuel Tanks
- ☐ Horn
- ☐ Lights
  - Head/Stop
  - Tail/Dash
  - Turn Indicators
  - Clearance/Marker
- ☐ Mirrors
- ☐ Muffler
- ☐ Oil Pressure
- ☐ Radiator
- ☐ Rear End
- ☐ Reflectors
- ☐ Safety Equipment
  - Fire Extinguisher
  - Flags/Flares/Fusees
  - Reflective Triangles
  - Spare Bulbs and Fuses
  - Spare Seal Beam
- ☐ Starter
- ☐ Steering
- ☐ Suspension System
- ☑ Tire Chains
- ☐ Tires
- ☐ Transmission
- ☑ Trip Recorder
- ☐ Wheels and Rims
- ☐ Windows
- ☐ Windshield Wipers
- ☐ Other

TRAILER(S) NO.(S) _____

- ☐ Brake Connections
- ☐ Brakes
- ☐ Coupling Devices
- ☐ Coupling (King) Pin
- ☐ Doors
- ☐ Hitch
- ☐ Landing Gear
- ☐ Lights - All
- ☐ Reflectors/Reflective Tape
- ☐ Roof
- ☐ Suspension System
- ☐ Tarpaulin
- ☐ Tires
- ☐ Wheels and Rims
- ☐ Other

Remarks: _____

☑ CONDITION OF THE ABOVE VEHICLE IS SATISFACTORY

DRIVER'S SIGNATURE: Rodolfo Peña

☐ ABOVE DEFECTS CORRECTED

☐ ABOVE DEFECTS NEED NOT BE CORRECTED FOR SAFE OPERATION OF VEHICLE

MECHANIC'S SIGNATURE: _____ DATE: _____

DRIVER'S SIGNATURE: _____ DATE: _____

ORIGINAL

© Copyright 2012 J. J. KELLER & ASSOCIATES, INC.®, Neenah, WI
USA • (800) 327-6868 • Printed in the United States

1862

DRIVER'S VEHICLE INSPECTION REPORT

AS REQUIRED BY THE D.O.T. FEDERAL MOTOR CARRIER SAFETY REGULATIONS

CARRIER: RMCT

ADDRESS: 6211 Chappell rd Alb N.M

DATE: 10-11-17 TIME: 8:30 A.M. _____ P.M.

CHECK ANY DEFECTIVE ITEM AND GIVE DETAILS UNDER "REMARKS" 2785

TRACTOR/ TRUCK NO. 4610 ODOMETER READING 498482

- ☐ Air Compressor
- ☐ Air Lines
- ☐ Battery
- ☐ Belts and Hoses
- ☐ Body
- ☐ Brake Accessories
- ☐ Brakes, Parking
- ☐ Brakes, Service
- ☐ Clutch
- ☑ Coupling Devices
- ☐ Defroster/Heater
- ☐ Drive Line
- ☐ Engine
- ☐ Exhaust
- ☑ Fifth Wheel
- ☐ Fluid Levels
- ☐ Frame and Assembly
- ☐ Front Axle
- ☐ Fuel Tanks
- ☐ Horn
- ☐ Lights
  - Head/Stop
  - Tail/Dash
  - Turn Indicators
  - Clearance/Marker
- ☐ Mirrors
- ☐ Muffler
- ☐ Oil Pressure
- ☐ Radiator
- ☐ Rear End
- ☐ Reflectors
- ☐ Safety Equipment
  - Fire Extinguisher
  - Flags/Flares/Fusees
  - Reflective Triangles
  - Spare Bulbs and Fuses
  - Spare Seal Beam
- ☐ Starter
- ☐ Steering
- ☐ Suspension System
- ☑ Tire Chains
- ☐ Tires
- ☐ Transmission
- ☑ Trip Recorder
- ☐ Wheels and Rims
- ☐ Windows
- ☐ Windshield Wipers
- ☐ Other

TRAILER(S) NO.(S) —

- ☐ Brake Connections
- ☐ Brakes
- ☐ Coupling Devices
- ☐ Coupling (King) Pin
- ☐ Doors
- ☐ Hitch
- ☐ Landing Gear
- ☐ Lights - All
- ☐ Reflectors/Reflective Tape
- ☐ Roof
- ☐ Suspension System
- ☐ Tarpaulin
- ☐ Tires
- ☐ Wheels and Rims
- ☐ Other

Remarks: _____

☑ CONDITION OF THE ABOVE VEHICLE IS SATISFACTORY

DRIVER'S SIGNATURE: [signature]

☐ ABOVE DEFECTS CORRECTED

☐ ABOVE DEFECTS NEED NOT BE CORRECTED FOR SAFE OPERATION OF VEHICLE

MECHANIC'S SIGNATURE: _____ DATE: _____

DRIVER'S SIGNATURE: _____ DATE: _____

ORIGINAL

© Copyright 2012 J. J. KELLER & ASSOCIATES, INC.®, Neenah, WI
USA • (800) 327-6868 • Printed in the United States

DRIVER'S VEHICLE INSPECTION REPORT

AS REQUIRED BY THE D.O.T. FEDERAL MOTOR CARRIER SAFETY REGULATIONS

CARRIER: RMCT

ADDRESS: 6211 chappell rd A15 n.m

DATE: 10-12-17 TIME: A.M. 12:30 P.M.

CHECK ANY DEFECTIVE ITEM AND GIVE DETAILS UNDER "REMARKS" 2790

TRACTOR/ TRUCK NO. 4610 ODOMETER READING 498484

- ☐ Air Compressor
- ☐ Air Lines
- ☐ Battery
- ☐ Belts and Hoses
- ☐ Body
- ☐ Brake Accessories
- ☐ Brakes, Parking
- ☐ Brakes, Service
- ☐ Clutch
- ☑ Coupling Devices
- ☐ Defroster/Heater
- ☐ Drive Line
- ☐ Engine
- ☐ Exhaust
- ☑ Fifth Wheel
- ☐ Fluid Levels
- ☐ Frame and Assembly
- ☐ Front Axle
- ☐ Fuel Tanks
- ☐ Horn
- ☐ Lights
  - Head/Stop
  - Tail/Dash
  - Turn Indicators
  - Clearance/Marker
- ☐ Mirrors
- ☐ Muffler
- ☐ Oil Pressure
- ☐ Radiator
- ☐ Rear End
- ☐ Reflectors
- ☐ Safety Equipment
  - Fire Extinguisher
  - Flags/Flares/Fusees
  - Reflective Triangles
  - Spare Bulbs and Fuses
  - Spare Seal Beam
- ☐ Starter
- ☐ Steering
- ☐ Suspension System
- ☑ Tire Chains
- ☐ Tires
- ☐ Transmission
- ☑ Trip Recorder
- ☐ Wheels and Rims
- ☐ Windows
- ☐ Windshield Wipers
- ☐ Other

TRAILER(S) NO.(S) ~~~~

- ☐ Brake Connections
- ☐ Brakes
- ☐ Coupling Devices
- ☐ Coupling (King) Pin
- ☐ Doors
- ☐ Hitch
- ☐ Landing Gear
- ☐ Lights - All
- ☐ Reflectors/Reflective Tape
- ☐ Roof
- ☐ Suspension System
- ☐ Tarpaulin
- ☐ Tires
- ☐ Wheels and Rims
- ☐ Other

Remarks:

☑ CONDITION OF THE ABOVE VEHICLE IS SATISFACTORY

DRIVER'S SIGNATURE: Robert B Bell

☐ ABOVE DEFECTS CORRECTED

☐ ABOVE DEFECTS NEED NOT BE CORRECTED FOR SAFE OPERATION OF VEHICLE

MECHANIC'S SIGNATURE: _____ DATE: _____

DRIVER'S SIGNATURE: _____ DATE: _____

ORIGINAL

© Copyright 2012 J. J. KELLER & ASSOCIATES, INC.®, Neenah, WI
USA • (800) 327-6868 • Printed in the United States

1862

RMCI INC
GENERAL CONTRACTOR

IFTA / IRP / WEIGHT DISTANCE POWER UNIT TRIP HAUL TICKET

EQUIPMENT / MATERIAL HAUL TICKET

MUST FILL OUT MILES / HRS. OF EQUIPMENT BEING HAULED

PO BOX 91447
Albuquerque, NM 87199
(505) 345-0008
(505) 345-0111 Fax

DATE: 10-12-17

Dispatch Location: 1611
Pickup Location: 1611
Delivery Location: 1611
Return Location: 1611
Vehicle/Trailer Used: 4610

Shop/Maintenance Transport ☐
Vendor Transport ☐
Job Transport ☐

Time Start: 12:30
Breakfast/Lunch/Dinner:
Time End: 3:30
Total Time: 3
NM Start Mileage: RD ~~498434~~ 498484
NM End Mileage: 498486
Total NM Miles: 2
Out of State Start Mileage:
Out of State Return Mileage:
Total Out of State Miles:

Trip Origin (Latitude/Longitude):
Trip Destination (Latitude/Longitude):

EQUIPMENT / MATERIAL HAULED		MUST FILL OUT MILES / HRS. OF EQUIPMENT BEING HAULED		
UNIT	MODEL / MATERIAL	MILES	HOURS	ACCESSORIES
4610	Interrat water	2	3	1 loads

Route of Travel: Jobsite

Fuel Purchase (Name & Address):

Number of Gallons:

Price Per Gallon:
Total Amount of Sale:
Purchaser (Name & Address):

Fuel Type:

DELIVERY / LOAD INSTRUCTIONS Start 09841.7
12:15 pm 09846.8

Received By:

Signature

Robert BeBault
Print Name

10-12-17
Date

RMCI INC
GENERAL CONTRACTOR

IFTA / IRP / WEIGHT DISTANCE POWER UNIT TRIP HAUL TICKET

EQUIPMENT / MATERIAL HAUL TICKET

MUST FILL OUT MILES / HRS. OF EQUIPMENT BEING HAULED

PO BOX 91447
Albuquerque, NM 87199
(505) 345-0008
(505) 345-0111 Fax

DATE: 10-11-17

Dispatch Location: 1611
Pickup Location: 1611
Delivery Location: 1611
Return Location: 1611
Vehicle/Trailer Used: 4610

Shop/Maintenance Transport ☐
Vendor Transport ☐
Job Transport ☐

Time Start: 8:30
Breakfast/Lunch/Dinner: 1/2
Time End: 5:30
Total Time: 7.5
NM Start Mileage: 498482
NM End Mileage: 498434
Total NM Miles: 2
Out of State Start Mileage: —
Out of State Return Mileage: —
Total Out of State Miles: —

Trip Origin (Latitude/Longitude):
Trip Destination (Latitude/Longitude):

EQUIPMENT / MATERIAL HAULED		MUST FILL OUT MILES / HRS. OF EQUIPMENT BEING HAULED		
UNIT	MODEL / MATERIAL	MILES	HOURS	ACCESSORIES
4610	Interpat water	2	7.5	1 loads

Route of Travel: Jobsite

Fuel Purchase (Name & Address):

Number of Gallons:

Price Per Gallon:
Total Amount of Sale:
Purchaser (Name & Address):

Fuel Type:

DELIVERY / LOAD INSTRUCTIONS	Start 09841.9
8:40	09844.7

Received By:

Signature: Robert BeBault
Print Name: Robert BeBault
Date: 10-11-17

RMCI INC
GENERAL CONTRACTOR

IFTA / IRP / WEIGHT DISTANCE POWER UNIT TRIP HAUL TICKET

EQUIPMENT / MATERIAL HAUL TICKET

MUST FILL OUT MILES / HRS. OF EQUIPMENT BEING HAULED

PO BOX 91447
Albuquerque, NM 87199
(505) 345-0008
(505) 345-0111 Fax

DATE: 10-10-17

Dispatch Location: 1611
Pickup Location: 1611
Delivery Location: 1611
Return Location: 1611
Vehicle/Trailer Used: 4610

Shop/Maintenance Transport ☐
Vendor Transport ☐
Job Transport ☐

Time Start: 3:30
Breakfast/Lunch/Dinner: N/a
Time End: 4:00
Total Time: 8.5
NM Start Mileage: 498479
NM End Mileage: 498482
Total NM Miles: 3
Out of State Start Mileage: —
Out of State Return Mileage: —
Total Out of State Miles: —

Trip Origin (Latitude/Longitude):
Trip Destination (Latitude/Longitude):

EQUIPMENT / MATERIAL HAULED		MUST FILL OUT MILES / HRS. OF EQUIPMENT BEING HAULED		
UNIT	MODEL / MATERIAL	MILES	HOURS	ACCESSORIES
4610	Internat water	3	8.5	1 loads

Route of Travel: Jobsite

Fuel Purchase (Name & Address):

Number of Gallons:

Price Per Gallon:
Total Amount of Sale:
Purchaser (Name & Address):

Fuel Type:

DELIVERY / LOAD INSTRUCTIONS	Start 09839.0
8:35 AM	09841.9

Received By:

Robert BeBault
Signature

Robert BeBault
Print Name

10-10-17
Date

RMCI INC
GENERAL CONTRACTOR
N.M. LICENSE No. 31964

EQUIPMENT CHECK LIST
LISTA DE REVISION DE MAQUINARIA

MODEL *(modelo)* JD BackHoe	WEEK ENDING *(fin de semana* ~~9-2-17~~ 10-14-17
ID NO. *(numero de la maquina)* # 1415	OPERATOR *(operador)* JESUS
JOB NO. *(numero de trabajo)* ~~1207~~ 1611	HOURS / MILEAGE *(horas o millaje)*

The Following Items To Be Checked Or Lubricated Daily As They Apply
(revisar o lubricar esta lista a diario)

CHECK *(revisar)*	MON *(lun)*	TUES *(mar)*	WED *(mier)*	THURS *(juev)*	FRI *(Vier)*
ENGINE OIL *(lubricasion del motor)*		✓	✓	✓	✓
AIR CLEANER *(filtro de aire)*		✓	✓	✓	✓
TRANSMISSION *(trasmisión)*		✓	✓	✓	✓
RADIATOR *(radiador)*		✓	✓	✓	✓
FUEL TANK *(tanque de disel o gasolina)*		✓	✓	✓	✓
AIR TANK *(tanque de aire)*		✓	✓	✓	✓
TIRES *(presion de llantas)*					
PARKING BRAKE/BRAKES *(freno de mano/frenos)*		✓	✓	✓	✓
HORN/BACK-UP-ALARM *(pito/alarma de reversa)*		✓	✓	✓	✓
GAUGES/OR INDICATORS (indicadores de sistemas)		✓	✓	✓	✓
CAB AND WINDOWS CLEAN (*cabina y vidrios limpios*)		✓	✓	✓	✓

LUBRICATE *(lubricasion)*	MON *(lun)*	TUES *(mar)*	WED *(mier)*	THURS *(juev)*	FRI *(Vier)*
STEERING OR SWIVEL PINS *(pernos de dirección)*		✓	✓	✓	✓
BUCKET PINS *(pernos de cubeta)*		✓	✓	✓	✓

REMARKS/PROBLEMS *(reporte de problemas)*:

Operator (operador)	Date (fecha)	Superintendent *(superintendente)*	Date (fecha)
JESUS Mayo	10/16/17	Ed Hyde	10-16-17

RMCI INC
GENERAL CONTRACTOR
N.M. LICENSE No. 31984

EQUIPMENT CHECK LIST
LISTA DE REVISION DE MAQUINARIA

MODEL *(modelo)* ~~JD Backhoe~~ KOMATSU	WEEK ENDING *(fin de semana)* ~~9-8-17~~ 10-14-17
ID NO. *(numero de la maquina)* ~~# 1415~~ 1107	OPERATOR *(operador)* Jesus
JOB NO. *(numero de trabajo)* ~~1202~~ 1611	HOURS / MILEAGE *(horas o millaje)* 2007

The Following Items To Be Checked Or Lubricated Daily As They Apply
(revisar o lubricar esta lista a diario)

CHECK *(revisar)*	MON *(lun)*	TUES *(mar)*	WED *(mier)*	THURS *(juev)*	FRI *(Vier)*
ENGINE OIL *(lubricasion del motor)*		✓	✓	✓	✓
AIR CLEANER *(filtro de aire)*		✓	✓	✓	✓
TRANSMISSION *(trasmisión)*					
RADIATOR *(radiador)*		✓	✓	✓	✓
FUEL TANK *(tanque de disel o gasolina)*		✓	✓	✓	✓
AIR TANK *(tanque de aire)*					
TIRES *(presion de llantas)*					
PARKING BRAKE/BRAKES *(freno de mano/frenos)*		✓	✓	✓	✓
HORN/BACK-UP-ALARM *(pito/alarma de reversa)*		✓	✓	✓	✓
GAUGES/OR INDICATORS (indicadores de sistemas)		✓	✓	✓	✓
CAB AND WINDOWS CLEAN (*cabina y vidrios limpios*)		✓	✓	✓	✓

LUBRICATE *(lubricasion)*	MON *(lun)*	TUES *(mar)*	WED *(mier)*	THURS *(juev)*	FRI *(Vier)*
STEERING OR SWIVEL PINS *(pernos de dirección)*		✓	✓	✓	✓
BUCKET PINS *(pernos de cubeta)*		✓	✓	✓	✓

REMARKS/PROBLEMS *(reporte de problemas)*: _____

Operator (operador)	Date (fecha)	Superintendent *(superintendente)*	Date (fecha)
Jesus Mejia	10/13/17	Ed Hyde	10-16-17

RMCI INC
GENERAL CONTRACTOR
N.M. LICENSE No. 31964

EQUIPMENT CHECK LIST
LISTA DE REVISION DE MAQUINARIA

MODEL *(modelo)* ~~JD BackHoe~~ Volvo	WEEK ENDING *(fin de semana)* ~~9-2-17~~ 10-14-17
ID NO. *(numero de la maquina)* ~~#1415~~ 2310	OPERATOR *(operador)* Jesus
JOB NO. *(numero de trabajo)* ~~1691~~ 1611	HOURS / MILEAGE *(horas o millaje)* 12337

The Following Items To Be Checked Or Lubricated Daily As They Apply
(revisar o lubricar esta lista a diario)

CHECK *(revisar)*	MON *(lun)*	TUES *(mar)*	WED *(mier)*	THURS *(juev)*	FRI *(Vier)*
ENGINE OIL *(lubricasion del motor)*	✓	✓	✓	✓	✓
AIR CLEANER *(filtro de aire)*		✓	✓	✓	✓
TRANSMISSION *(trasmisión)*		✓	✓	✓	✓
RADIATOR *(radiador)*		✓	✓	✓	✓
FUEL TANK *(tanque de disel o gasolina)*		✓	✓	✓	✓
AIR TANK *(tanque de aire)*			✓	✓	✓
TIRES *(presion de llantas)*		✓	✓	✓	✓
PARKING BRAKE/BRAKES *(freno de mano/frenos)*		✓	✓	✓	✓
HORN/BACK-UP-ALARM *(pito/alarma de reversa)*		✓	✓	✓	✓
GAUGES/OR INDICATORS (indicadores de sistemas)		✓	✓	✓	✓
CAB AND WINDOWS CLEAN (*cabina y vidrios limpios*)		✓	✓	✓	✓

LUBRICATE *(lubricasion)*	MON *(lun)*	TUES *(mar)*	WED *(mier)*	THURS *(juev)*	FRI *(Vier)*
STEERING OR SWIVEL PINS *(pernos de dirección)*					
BUCKET PINS *(pernos de cubeta)*		✓	✓	✓	✓

REMARKS/PROBLEMS *(reporte de problemas)*:

Operator (operador)	Date (fecha)	Superintendent *(superintendente)*	Date (fecha)
Jesus Mejia	10-13-17	Ed Hyde	10-16-17

DRIVER'S VEHICLE INSPECTION REPORT

AS REQUIRED BY THE D.O.T. FEDERAL MOTOR CARRIER SAFETY REGULATIONS

CARRIER: RMCT

ADDRESS: 6211 chappell rd Alb nm

DATE: 10-16-17 TIME: 7:30 A.M. _____ P.M.

CHECK ANY DEFECTIVE ITEM AND GIVE DETAILS UNDER "REMARKS" 2791

TRACTOR/ TRUCK NO. _____ ODOMETER READING 498486

- ☐ Air Compressor
- ☐ Air Lines
- ☐ Battery
- ☐ Belts and Hoses
- ☐ Body
- ☐ Brake Accessories
- ☐ Brakes, Parking
- ☐ Brakes, Service
- ☐ Clutch
- ☑ Coupling Devices
- ☐ Defroster/Heater
- ☐ Drive Line
- ☐ Engine
- ☐ Exhaust
- ☑ Fifth Wheel
- ☐ Fluid Levels
- ☐ Frame and Assembly
- ☐ Front Axle
- ☐ Fuel Tanks
- ☐ Horn
- ☐ Lights
  - Head/Stop
  - Tail/Dash
  - Turn Indicators
  - Clearance/Marker
- ☐ Mirrors
- ☐ Muffler
- ☐ Oil Pressure
- ☐ Radiator
- ☐ Rear End
- ☐ Reflectors
- ☐ Safety Equipment
  - Fire Extinguisher
  - Flags/Flares/Fusees
  - Reflective Triangles
  - Spare Bulbs and Fuses
  - Spare Seal Beam
- ☐ Starter
- ☐ Steering
- ☐ Suspension System
- ☑ Tire Chains
- ☐ Tires
- ☐ Transmission
- ☑ Trip Recorder
- ☐ Wheels and Rims
- ☐ Windows
- ☐ Windshield Wipers
- ☐ Other

TRAILER(S) NO.(S) _____

- ☐ Brake Connections
- ☐ Brakes
- ☐ Coupling Devices
- ☐ Coupling (King) Pin
- ☐ Doors
- ☐ Hitch
- ☐ Landing Gear
- ☐ Lights - All
- ☐ Reflectors/Reflective Tape
- ☐ Roof
- ☐ Suspension System
- ☐ Tarpaulin
- ☐ Tires
- ☐ Wheels and Rims
- ☐ Other

Remarks: _____

☑ CONDITION OF THE ABOVE VEHICLE IS SATISFACTORY

DRIVER'S SIGNATURE: Robert B Baker

☐ ABOVE DEFECTS CORRECTED

☐ ABOVE DEFECTS NEED NOT BE CORRECTED FOR SAFE OPERATION OF VEHICLE

MECHANIC'S SIGNATURE: _____ DATE: _____

DRIVER'S SIGNATURE: _____ DATE: _____

ORIGINAL

© Copyright 2012 J. J. KELLER & ASSOCIATES, INC.®, Neenah, WI
USA • (800) 327-6868 • Printed in the United States

1862

DRIVER'S VEHICLE INSPECTION REPORT

AS REQUIRED BY THE D.O.T. FEDERAL MOTOR CARRIER SAFETY REGULATIONS

CARRIER: RMCT

ADDRESS: 6211 chappell rd Alb N.M

DATE: 10-17-17 TIME: 7:30 A.M. _____ P.M.

CHECK ANY DEFECTIVE ITEM AND GIVE DETAILS UNDER "REMARKS" 2794

TRACTOR/ TRUCK NO. 4610 ODOMETER READING 498488

- ☐ Air Compressor
- ☐ Air Lines
- ☐ Battery
- ☐ Belts and Hoses
- ☐ Body
- ☐ Brake Accessories
- ☐ Brakes, Parking
- ☐ Brakes, Service
- ☐ Clutch
- ☑ Coupling Devices
- ☐ Defroster/Heater
- ☐ Drive Line
- ☐ Engine
- ☐ Exhaust
- ☑ Fifth Wheel
- ☐ Fluid Levels
- ☐ Frame and Assembly
- ☐ Front Axle
- ☐ Fuel Tanks
- ☐ Horn
- ☐ Lights
  - Head/Stop
  - Tail/Dash
  - Turn Indicators
  - Clearance/Marker
- ☐ Mirrors
- ☐ Muffler
- ☐ Oil Pressure
- ☐ Radiator
- ☐ Rear End
- ☐ Reflectors
- ☐ Safety Equipment
  - Fire Extinguisher
  - Flags/Flares/Fusees
  - Reflective Triangles
  - Spare Bulbs and Fuses
  - Spare Seal Beam
- ☐ Starter
- ☐ Steering
- ☐ Suspension System
- ☑ Tire Chains
- ☐ Tires
- ☐ Transmission
- ☑ Trip Recorder
- ☐ Wheels and Rims
- ☐ Windows
- ☐ Windshield Wipers
- ☐ Other

TRAILER(S) NO.(S) —

- ☐ Brake Connections
- ☐ Brakes
- ☐ Coupling Devices
- ☐ Coupling (King) Pin
- ☐ Doors
- ☐ Hitch
- ☐ Landing Gear
- ☐ Lights - All
- ☐ Reflectors/Reflective Tape
- ☐ Roof
- ☐ Suspension System
- ☐ Tarpaulin
- ☐ Tires
- ☐ Wheels and Rims
- ☐ Other

Remarks: _____

☑ CONDITION OF THE ABOVE VEHICLE IS SATISFACTORY

DRIVER'S SIGNATURE: Robert BeBault

☐ ABOVE DEFECTS CORRECTED

☐ ABOVE DEFECTS NEED NOT BE CORRECTED FOR SAFE OPERATION OF VEHICLE

MECHANIC'S SIGNATURE: _____ DATE: _____

DRIVER'S SIGNATURE: _____ DATE: _____

ORIGINAL

© Copyright 2012 J. J. KELLER & ASSOCIATES, INC.®, Neenah, WI
USA • (800) 327-6868 • Printed in the United States

1862

DRIVER'S VEHICLE INSPECTION REPORT

AS REQUIRED BY THE D.O.T. FEDERAL MOTOR CARRIER SAFETY REGULATIONS

CARRIER: RMCI

ADDRESS: 6211 chappell rd Alb N.M

DATE: 10-18-17 TIME: 7:30 A.M. _____ P.M.

CHECK ANY DEFECTIVE ITEM AND GIVE DETAILS UNDER "REMARKS" 2197

TRACTOR/ TRUCK NO. 4610 ODOMETER READING 498459

- ☐ Air Compressor
- ☐ Air Lines
- ☐ Battery
- ☐ Belts and Hoses
- ☐ Body
- ☐ Brake Accessories
- ☐ Brakes, Parking
- ☐ Brakes, Service
- ☐ Clutch
- ☑ Coupling Devices
- ☐ Defroster/Heater
- ☐ Drive Line
- ☐ Engine
- ☐ Exhaust
- ☑ Fifth Wheel
- ☐ Fluid Levels
- ☐ Frame and Assembly
- ☐ Front Axle
- ☐ Fuel Tanks
- ☐ Horn
- ☐ Lights
  - Head/Stop
  - Tail/Dash
  - Turn Indicators
  - Clearance/Marker
- ☐ Mirrors
- ☐ Muffler
- ☐ Oil Pressure
- ☐ Radiator
- ☐ Rear End
- ☐ Reflectors
- ☐ Safety Equipment
  - Fire Extinguisher
  - Flags/Flares/Fusees
  - Reflective Triangles
  - Spare Bulbs and Fuses
  - Spare Seal Beam
- ☐ Starter
- ☐ Steering
- ☐ Suspension System
- ☑ Tire Chains
- ☐ Tires
- ☐ Transmission
- ☑ Trip Recorder
- ☐ Wheels and Rims
- ☐ Windows
- ☐ Windshield Wipers
- ☐ Other

TRAILER(S) NO.(S) _____

- ☐ Brake Connections
- ☐ Brakes
- ☐ Coupling Devices
- ☐ Coupling (King) Pin
- ☐ Doors
- ☐ Hitch
- ☐ Landing Gear
- ☐ Lights - All
- ☐ Reflectors/Reflective Tape
- ☐ Roof
- ☐ Suspension System
- ☐ Tarpaulin
- ☐ Tires
- ☐ Wheels and Rims
- ☐ Other

Remarks: _____

☑ CONDITION OF THE ABOVE VEHICLE IS SATISFACTORY

DRIVER'S SIGNATURE: [signature]

☐ ABOVE DEFECTS CORRECTED

☐ ABOVE DEFECTS NEED NOT BE CORRECTED FOR SAFE OPERATION OF VEHICLE

MECHANIC'S SIGNATURE: _____ DATE: _____

DRIVER'S SIGNATURE: _____ DATE: _____

ORIGINAL

© Copyright 2012 J. J. KELLER & ASSOCIATES, INC.®, Neenah, WI
USA • (800) 327-6868 • Printed in the United States

1862

DRIVER'S VEHICLE INSPECTION REPORT

AS REQUIRED BY THE D.O.T. FEDERAL MOTOR CARRIER SAFETY REGULATIONS

CARRIER: RMCT

ADDRESS: 6211 chappell rd Alb N.M

DATE: 10-19-17 TIME: 7:00 A.M. _____ P.M.

CHECK ANY DEFECTIVE ITEM AND GIVE DETAILS UNDER "REMARKS" 2802

TRACTOR/ TRUCK NO. 4610 ODOMETER READING 498491

- ☐ Air Compressor
- ☐ Air Lines
- ☐ Battery
- ☐ Belts and Hoses
- ☐ Body
- ☐ Brake Accessories
- ☐ Brakes, Parking
- ☐ Brakes, Service
- ☐ Clutch
- ☒ Coupling Devices
- ☐ Defroster/Heater
- ☐ Drive Line
- ☐ Engine
- ☐ Exhaust
- ☒ Fifth Wheel
- ☐ Fluid Levels
- ☐ Frame and Assembly
- ☐ Front Axle
- ☐ Fuel Tanks
- ☐ Horn
- ☐ Lights
  - Head/Stop
  - Tail/Dash
  - Turn Indicators
  - Clearance/Marker
- ☐ Mirrors
- ☐ Muffler
- ☐ Oil Pressure
- ☐ Radiator
- ☐ Rear End
- ☐ Reflectors
- ☐ Safety Equipment
  - Fire Extinguisher
  - Flags/Flares/Fusees
  - Reflective Triangles
  - Spare Bulbs and Fuses
  - Spare Seal Beam
- ☐ Starter
- ☐ Steering
- ☐ Suspension System
- ☒ Tire Chains
- ☐ Tires
- ☐ Transmission
- ☒ Trip Recorder
- ☐ Wheels and Rims
- ☐ Windows
- ☐ Windshield Wipers
- ☐ Other

TRAILER(S) NO.(S) _____

- ☐ Brake Connections
- ☐ Brakes
- ☐ Coupling Devices
- ☐ Coupling (King) Pin
- ☐ Doors
- ☐ Hitch
- ☐ Landing Gear
- ☐ Lights - All
- ☐ Reflectors/Reflective Tape
- ☐ Roof
- ☐ Suspension System
- ☐ Tarpaulin
- ☐ Tires
- ☐ Wheels and Rims
- ☐ Other

Remarks: _____

☒ CONDITION OF THE ABOVE VEHICLE IS SATISFACTORY

DRIVER'S SIGNATURE: Ralph DeBaca

☐ ABOVE DEFECTS CORRECTED

☐ ABOVE DEFECTS NEED NOT BE CORRECTED FOR SAFE OPERATION OF VEHICLE

MECHANIC'S SIGNATURE: _____ DATE: _____

DRIVER'S SIGNATURE: _____ DATE: _____

ORIGINAL

© Copyright 2012 J. J. KELLER & ASSOCIATES, INC.®, Neenah, WI
USA • (800) 327-6868 • Printed in the United States

1862

DRIVER'S VEHICLE INSPECTION REPORT

AS REQUIRED BY THE D.O.T. FEDERAL MOTOR CARRIER SAFETY REGULATIONS

CARRIER: RMCT

ADDRESS: 6211 Chappell rd Alb n.m

DATE: 10-20-17 TIME: 7:00 A.M. _____ P.M.

CHECK ANY DEFECTIVE ITEM AND GIVE DETAILS UNDER "REMARKS" 2807

TRACTOR/ TRUCK NO. 460 ODOMETER READING 498495

- ☐ Air Compressor
- ☐ Air Lines
- ☐ Battery
- ☐ Belts and Hoses
- ☐ Body
- ☐ Brake Accessories
- ☐ Brakes, Parking
- ☐ Brakes, Service
- ☐ Clutch
- ☑ Coupling Devices
- ☐ Defroster/Heater
- ☐ Drive Line
- ☐ Engine
- ☐ Exhaust
- ☑ Fifth Wheel
- ☐ Fluid Levels
- ☐ Frame and Assembly
- ☐ Front Axle
- ☐ Fuel Tanks
- ☐ Horn
- ☐ Lights
  - Head/Stop
  - Tail/Dash
  - Turn Indicators
  - Clearance/Marker
- ☐ Mirrors
- ☐ Muffler
- ☐ Oil Pressure
- ☐ Radiator
- ☐ Rear End
- ☐ Reflectors
- ☐ Safety Equipment
  - Fire Extinguisher
  - Flags/Flares/Fusees
  - Reflective Triangles
  - Spare Bulbs and Fuses
  - Spare Seal Beam
- ☐ Starter
- ☐ Steering
- ☐ Suspension System
- ☑ Tire Chains
- ☐ Tires
- ☐ Transmission
- ☑ Trip Recorder
- ☐ Wheels and Rims
- ☐ Windows
- ☐ Windshield Wipers
- ☐ Other

TRAILER(S) NO.(S) —

- ☐ Brake Connections
- ☐ Brakes
- ☐ Coupling Devices
- ☐ Coupling (King) Pin
- ☐ Doors
- ☐ Hitch
- ☐ Landing Gear
- ☐ Lights - All
- ☐ Reflectors/Reflective Tape
- ☐ Roof
- ☐ Suspension System
- ☐ Tarpaulin
- ☐ Tires
- ☐ Wheels and Rims
- ☐ Other

Remarks: Truck was not serviced by fueler Today.

☑ CONDITION OF THE ABOVE VEHICLE IS SATISFACTORY

DRIVER'S SIGNATURE: [signature]

☐ ABOVE DEFECTS CORRECTED

☐ ABOVE DEFECTS NEED NOT BE CORRECTED FOR SAFE OPERATION OF VEHICLE

MECHANIC'S SIGNATURE: _____ DATE: _____

DRIVER'S SIGNATURE: _____ DATE: _____

ORIGINAL

© Copyright 2012 J. J. KELLER & ASSOCIATES, INC.®, Neenah, WI
USA • (800) 327-6868 • Printed in the United States

1862

RMCI INC
GENERAL CONTRACTOR

IFTA / IRP / WEIGHT DISTANCE POWER UNIT TRIP HAUL TICKET

EQUIPMENT / MATERIAL HAUL TICKET

MUST FILL OUT MILES / HRS. OF EQUIPMENT BEING HAULED

PO BOX 91447
Albuquerque, NM 87199
(505) 345-0008
(505) 345-0111 Fax

DATE: 10-16-17

Dispatch Location: 1611
Pickup Location: 1611
Delivery Location: 1611
Return Location: 1611
Vehicle/Trailer Used: 4610

Shop/Maintenance Transport ☐
Vendor Transport ☐
Job Transport ☐

Time Start: 7:30
Breakfast/Lunch/Dinner: ½ hr
Time End: 3:30
Total Time: 7.5
NM Start Mileage: 498486
NM End Mileage: 498488
Total NM Miles: 2
Out of State Start Mileage: —
Out of State Return Mileage: —
Total Out of State Miles: —

Trip Origin (Latitude/Longitude):
Trip Destination (Latitude/Longitude):

EQUIPMENT / MATERIAL HAULED		MUST FILL OUT MILES / HRS. OF EQUIPMENT BEING HAULED		
UNIT	MODEL / MATERIAL	MILES	HOURS	ACCESSORIES
4610	Internat water	2	7.5	1 loads

Route of Travel: Jobsite

Fuel Purchase (Name & Address):

Number of Gallons:

Price Per Gallon:
Total Amount of Sale:
Purchaser (Name & Address):

Fuel Type:

DELIVERY / LOAD INSTRUCTIONS Start 09846.8
7:40 Am 09851.0

Received By:

Signature

Robert BeBault
Print Name

10-16-17
Date

RMCI INC
GENERAL CONTRACTOR

IFTA / IRP / WEIGHT DISTANCE POWER UNIT TRIP HAUL TICKET

EQUIPMENT / MATERIAL HAUL TICKET

MUST FILL OUT MILES / HRS. OF EQUIPMENT BEING HAULED

PO BOX 91447
Albuquerque, NM 87199
(505) 345-0008
(505) 345-0111 Fax

DATE: 10-17-17

Dispatch Location: 1611
Pickup Location: 1611
Delivery Location: 1611
Return Location: 1611
Vehicle/Trailer Used: 4610

Shop/Maintenance Transport ☐
Vendor Transport ☐
Job Transport ☐

Time Start: 7:30
Breakfast/Lunch/Dinner: 1/2 hr
Time End: 3:30
Total Time: 7.5
NM Start Mileage: 498488
NM End Mileage: 498489
Total NM Miles:
Out of State Start Mileage: —
Out of State Return Mileage: —
Total Out of State Miles: —

Trip Origin (Latitude/Longitude):
Trip Destination (Latitude/Longitude):

EQUIPMENT / MATERIAL HAULED		MUST FILL OUT MILES / HRS. OF EQUIPMENT BEING HAULED		
UNIT	MODEL / MATERIAL	MILES	HOURS	ACCESSORIES
4610	Internat water	1	7.5	1 loads

Route of Travel: Jobsite

Fuel Purchase (Name & Address):

Number of Gallons:

Price Per Gallon:
Total Amount of Sale:
Purchaser (Name & Address):

Fuel Type:

DELIVERY / LOAD INSTRUCTIONS

Start 09851.0
09854.0

8:45 AM

Received By:

Signature

Robert Bebout
Print Name

10-17-17
Date

RMCI INC
GENERAL CONTRACTOR

IFTA / IRP / WEIGHT DISTANCE POWER UNIT TRIP HAUL TICKET

EQUIPMENT / MATERIAL HAUL TICKET

MUST FILL OUT MILES / HRS. OF EQUIPMENT BEING HAULED

PO BOX 91447
Albuquerque, NM 87199
(505) 345-0008
(505) 345-0111 Fax

DATE: 10-18-17

Dispatch Location: 1611
Pickup Location: 1611
Delivery Location: 1681
Return Location: 1611
Vehicle/Trailer Used: 4610

Shop/Maintenance Transport ☐
Vendor Transport ☐
Job Transport ☐

Time Start: 7:30
Breakfast/Lunch/Dinner: no lunch
Time End: 4:00
Total Time: 8:00
NM Start Mileage: 498489
NM End Mileage: 498491
Total NM Miles: 2
Out of State Start Mileage: —
Out of State Return Mileage: —
Total Out of State Miles: —

Trip Origin (Latitude/Longitude):
Trip Destination (Latitude/Longitude):

EQUIPMENT / MATERIAL HAULED		MUST FILL OUT MILES / HRS. OF EQUIPMENT BEING HAULED		
UNIT	MODEL / MATERIAL	MILES	HOURS	ACCESSORIES
4610	Internat water	2	9	loads

Route of Travel: Jobsite

Fuel Purchase (Name & Address):

Number of Gallons:

Price Per Gallon:
Total Amount of Sale:
Purchaser (Name & Address):

Fuel Type:

DELIVERY / LOAD INSTRUCTIONS Stwt 09854.0 09858.2

7:48 AM

Received By:

Signature

Robert Bullock
Print Name

10-18-17
Date

RMCI INC
GENERAL CONTRACTOR

IFTA / IRP / WEIGHT DISTANCE POWER UNIT TRIP HAUL TICKET

EQUIPMENT / MATERIAL HAUL TICKET

MUST FILL OUT MILES / HRS. OF EQUIPMENT BEING HAULED

PO BOX 91447
Albuquerque, NM 87199
(505) 345-0008
(505) 345-0111 Fax

DATE: 10-19-17

Dispatch Location: 1611
Pickup Location: 1611
Delivery Location: 1611
Return Location: 1611
Vehicle/Trailer Used: 4610

Shop/Maintenance Transport ☐
Vendor Transport ☐
Job Transport ☐

Time Start: 7:00
Breakfast/Lunch/Dinner: 1/2
Time End: 4:30
Total Time: 9
NM Start Mileage: 498491
NM End Mileage: 498495
Total NM Miles: 4
Out of State Start Mileage: —
Out of State Return Mileage: —
Total Out of State Miles: —

Trip Origin (Latitude/Longitude):
Trip Destination (Latitude/Longitude):

EQUIPMENT / MATERIAL HAULED		MUST FILL OUT MILES / HRS. OF EQUIPMENT BEING HAULED		
UNIT	MODEL / MATERIAL	MILES	HOURS	ACCESSORIES
4610	Interrad water	4	9	1 loads

Route of Travel: Job site

Fuel Purchase (Name & Address):

Number of Gallons:

Price Per Gallon:
Total Amount of Sale:
Purchaser (Name & Address):

Fuel Type:

DELIVERY / LOAD INSTRUCTIONS Start 09858.2
7:30 09862.6

Received By:

Signature

Robert BeBault
Print Name

10-19-17
Date

RMCI INC
GENERAL CONTRACTOR

PO BOX 91447
Albuquerque, NM 87199
(505) 345-0008
(505) 345-0111 Fax

IFTA / IRP / WEIGHT DISTANCE POWER UNIT TRIP HAUL TICKET

EQUIPMENT / MATERIAL HAUL TICKET

MUST FILL OUT MILES / HRS. OF EQUIPMENT BEING HAULED

DATE: 10-20-17

Dispatch Location: 1611
Pickup Location: 1611
Delivery Location: 1611
Return Location: 1611
Vehicle/Trailer Used: 4610

Shop/Maintenance Transport ☐
Vendor Transport ☐
Job Transport ☐

Time Start: 7:00
Breakfast/Lunch/Dinner:
Time End: 12:00
Total Time: 5
NM Start Mileage: 498495
NM End Mileage: 498496
Total NM Miles: 1
Out of State Start Mileage: —
Out of State Return Mileage: —
Total Out of State Miles: —

Trip Origin (Latitude/Longitude):
Trip Destination (Latitude/Longitude):

EQUIPMENT / MATERIAL HAULED		MUST FILL OUT MILES / HRS. OF EQUIPMENT BEING HAULED		
UNIT	MODEL / MATERIAL	MILES	HOURS	ACCESSORIES
4610	Internat water	1	5	Loads

Route of Travel: Jobsite

Fuel Purchase (Name & Address):

Number of Gallons:

Price Per Gallon:
Total Amount of Sale:
Purchaser (Name & Address):

Fuel Type:

DELIVERY / LOAD INSTRUCTIONS start 09862.6
7:25 AM 09865.6

Received By:

Signature

Robert Bezavit
Print Name

10-20-17
Date

RMCI INC
GENERAL CONTRACTOR
N.M. LICENSE No. 31964

EQUIPMENT CHECK LIST
LISTA DE REVISION DE MAQUINARIA

MODEL *(modelo)* JD BackHoe	WEEK ENDING *(fin de semana* ~~9-24-17~~ 10-21-17
ID NO. *(numero de la maquina)* # 1415	OPERATOR *(operador)* Jesus Moya
JOB NO. *(numero de trabajo)* 1611	HOURS / MILEAGE *(horas o millaje)* 5007

The Following Items To Be Checked Or Lubricated Daily As They Apply
(revisar o lubricar esta lista a diario)

CHECK *(revisar)*	MON *(lun)*	TUES *(mar)*	WED *(mier)*	THURS *(juev)*	FRI *(Vier)*
ENGINE OIL *(lubricasion del motor)*	✓	✓	✓	✓	✓
AIR CLEANER *(filtro de aire)*	✓	✓	✓	✓	✓
TRANSMISSION *(trasmisión)*	✓	✓	✓	✓	✓
RADIATOR *(radiador)*	✓	✓	✓	✓	✓
FUEL TANK *(tanque de disel o gasolina)*	✓	✓	✓	✓	✓
AIR TANK *(tanque de aire)*					✓
TIRES *(presion de llantas)*	✓	✓	✓	✓	✓
PARKING BRAKE/BRAKES *(freno de mano/frenos)*	✓	✓	✓	✓	✓
HORN/BACK-UP-ALARM *(pito/alarma de reversa)*	✓	✓	✓	✓	✓
GAUGES/OR INDICATORS (indicadores de sistemas)	✓	✓	✓	✓	✓
CAB AND WINDOWS CLEAN (*cabina y vidrios limpios*)	✓	✓	✓	✓	✓

LUBRICATE *(lubricasion)*	MON *(lun)*	TUES *(mar)*	WED *(mier)*	THURS *(juev)*	FRI *(Vier)*
STEERING OR SWIVEL PINS *(pernos de dirección)*					
BUCKET PINS *(pernos de cubeta)*	✓	✓	✓	✓	✓

REMARKS/PROBLEMS *(reporte de problemas)*:

Operator (operador)	Date (fecha)	Superintendent *(superintendente)*	Date (fecha)
J Moya	10-20-17	Ed Hyde	10-23-17

RMCI INC
GENERAL CONTRACTOR
N.M. LICENSE No. 31964

EXCAVATOR CHECK LIST
LISTA DE REVISION DE ESCAVADORA

MODEL *(modelo)* PC - 200 KOMATSU	WEEK ENDING *(fin de semana)* 10-21-17
ID NO. *(numero de la maquina)* 1107	OPERATOR *(operador)* Jesus Moya
JOB NO. *(numero de trabajo)* 1611	HOURS / MILEAGE *(horas o millaje)* 21024

The Following Items To Be Checked Or Lubricated Daily As They Apply
(revisar o lubricar esta lista a diario)

CHECK *(revisar)*	MON *(lun)*	TUES *(mar)*	WED *(mier)*	THURS *(juev)*	FRI *(Vier)*
ENGINE OIL *(lubricasión del motor)*	✓	✓	✓	✓	✓
AIR CLEANER *(filtro de aire)*	✓	✓	✓	✓	✓
SWIVEL GEAR CASE *(caja de mesa rotadora)*	✓	✓	✓	✓	✓
RADIATOR *(radiador)*	✓	✓	✓	✓	✓
FUEL TANK *(tanque de disel o gasolina)*	✓	✓	✓	✓	✓
HYDRAULIC FLUID LEVEL *(nivel de aciete hidraulico)*	✓	✓	✓	✓	✓
TRACKS-CLEAN-TENSION *(traques – limpios y ajustasión propia)*	✓	✓	✓	✓	✓
SWINGBREAK *(freno de mesa de rotación)*	✓	✓	✓	✓	✓
HORN/BACK-UP-ALARM *(pito/alarma de reversa)*	✓	✓	✓	✓	✓
GAUGES OR INDICATORS *(indicadores de sistemas)*	✓	✓	✓	✓	✓
QUICK COUPLER *(acoplador rapido de cubeta)*	✓	✓	✓	✓	✓
CAB AND WINDOWS CLEAN (*cabina y vidrios limpios*)	✓	✓	✓	✓	✓

LUBRICATE *(lubricasion)*	MON *(lun)*	TUES *(mar)*	WED *(mier)*	THURS *(juev)*	FRI *(Vier)*
HOUSE TABLE *(mesa de rotación)*	✓	✓	✓	✓	✓
WORKING PINS *(pernos del braso)*	✓	✓	✓	✓	✓
BUCKET PINS *(pernos de cubeta)*	✓	✓	✓	✓	✓

REMARKS/PROBLEMS *(reporte de problemas)*: _____

Operator (operador)	Date (fecha)	Superintendent *(superintendente)*	Date (fecha)
J Moya	10-20-17	ED Hyde	10-23-17

RMCI INC
GENERAL CONTRACTOR
N.M. LICENSE No. 31964

EQUIPMENT CHECK LIST
LISTA DE REVISION DE MAQUINARIA

MODEL *(modelo)* ~~JD Backhoe~~ Volvo	WEEK ENDING *(fin de semana* ~~9/17~~ 10-21-17
ID NO. *(numero de la maquina)* ~~#1415~~ 2310	OPERATOR *(operador)* Jesus Moya
JOB NO. *(numero de trabajo)* 1611	HOURS / MILEAGE *(horas o millaje)* 17343

The Following Items To Be Checked Or Lubricated Daily As They Apply
(revisar o lubricar esta lista a diario)

CHECK *(revisar)*	MON *(lun)*	TUES *(mar)*	WED *(mier)*	THURS *(juev)*	FRI *(Vier)*
ENGINE OIL *(lubricasion del motor)*	✓	✓	✓	✓	✓
AIR CLEANER *(filtro de aire)*	✓	✓	✓	✓	✓
TRANSMISSION *(trasmisión)*	✓	✓	✓	✓	✓
RADIATOR *(radiador)*	✓	✓	✓	✓	✓
FUEL TANK *(tanque de disel o gasolina)*	✓	✓	✓	✓	✓
AIR TANK *(tanque de aire)*					
TIRES *(presion de llantas)*	✓	✓	✓	✓	✓
PARKING BRAKE/BRAKES *(freno de mano/frenos)*	✓	✓	✓	✓	✓
HORN/BACK-UP-ALARM *(pito/alarma de reversa)*	✓	✓	✓	✓	✓
GAUGES/OR INDICATORS (indicadores de sistemas)	✓	✓	✓	✓	✓
CAB AND WINDOWS CLEAN (*cabina y vidrios limpios*)	✓	✓	✓	✓	✓

LUBRICATE *(lubricasion)*	MON *(lun)*	TUES *(mar)*	WED *(mier)*	THURS *(juev)*	FRI *(Vier)*
STEERING OR SWIVEL PINS *(pernos de dirección)*					
BUCKET PINS *(pernos de cubeta)*	✓	✓	✓	✓	✓

REMARKS/PROBLEMS *(reporte de problemas)*:

Operator (operador)	Date (fecha)	Superintendent *(superintendente)*	Date (fecha)
Jmoya	10-20-17	Ed Hyde	10-23-17

DRIVER'S VEHICLE INSPECTION REPORT

AS REQUIRED BY THE D.O.T. FEDERAL MOTOR CARRIER SAFETY REGULATIONS

CARRIER: RMCI

ADDRESS: 6211 chappell rd Alb N.M

DATE: 10-23-17 TIME: 7:00 A.M. _____ P.M.

CHECK ANY DEFECTIVE ITEM AND GIVE DETAILS UNDER "REMARKS" 2810

TRACTOR/ TRUCK NO. 4610 ODOMETER READING 498496

- ☐ Air Compressor
- ☐ Air Lines
- ☐ Battery
- ☐ Belts and Hoses
- ☐ Body
- ☐ Brake Accessories
- ☐ Brakes, Parking
- ☐ Brakes, Service
- ☐ Clutch
- ☑ Coupling Devices
- ☐ Defroster/Heater
- ☐ Drive Line
- ☐ Engine
- ☐ Exhaust
- ☑ Fifth Wheel
- ☐ Fluid Levels
- ☐ Frame and Assembly
- ☐ Front Axle
- ☐ Fuel Tanks
- ☐ Horn
- ☐ Lights
  - Head/Stop
  - Tail/Dash
  - Turn Indicators
  - Clearance/Marker
- ☐ Mirrors
- ☐ Muffler
- ☐ Oil Pressure
- ☐ Radiator
- ☐ Rear End
- ☐ Reflectors
- ☐ Safety Equipment
  - Fire Extinguisher
  - Flags/Flares/Fusees
  - Reflective Triangles
  - Spare Bulbs and Fuses
  - Spare Seal Beam
- ☐ Starter
- ☐ Steering
- ☐ Suspension System
- ☑ Tire Chains
- ☐ Tires
- ☐ Transmission
- ☑ Trip Recorder
- ☐ Wheels and Rims
- ☐ Windows
- ☐ Windshield Wipers
- ☐ Other

TRAILER(S) NO.(S) —

- ☐ Brake Connections
- ☐ Brakes
- ☐ Coupling Devices
- ☐ Coupling (King) Pin
- ☐ Doors
- ☐ Hitch
- ☐ Landing Gear
- ☐ Lights - All
- ☐ Reflectors/Reflective Tape
- ☐ Roof
- ☐ Suspension System
- ☐ Tarpaulin
- ☐ Tires
- ☐ Wheels and Rims
- ☐ Other

Remarks: _____

☑ CONDITION OF THE ABOVE VEHICLE IS SATISFACTORY

DRIVER'S SIGNATURE: Ruth Bo Ball

☐ ABOVE DEFECTS CORRECTED

☐ ABOVE DEFECTS NEED NOT BE CORRECTED FOR SAFE OPERATION OF VEHICLE

MECHANIC'S SIGNATURE: _____ DATE: _____

DRIVER'S SIGNATURE: _____ DATE: _____

ORIGINAL

© Copyright 2012 J. J. KELLER & ASSOCIATES, INC.®, Neenah, WI
USA • (800) 327-6868 • Printed in the United States

DRIVER'S VEHICLE INSPECTION REPORT

AS REQUIRED BY THE D.O.T. FEDERAL MOTOR CARRIER SAFETY REGULATIONS

CARRIER: RMCI

ADDRESS: 6211 chappell rd Alb n.m

DATE: 10-20-17 TIME: 7:00 A.M. _____ P.M.

CHECK ANY DEFECTIVE ITEM AND GIVE DETAILS UNDER "REMARKS" 2819

TRACTOR/ TRUCK NO. 4610 ODOMETER READING 498502

- ☐ Air Compressor
- ☐ Air Lines
- ☐ Battery
- ☐ Belts and Hoses
- ☐ Body
- ☐ Brake Accessories
- ☐ Brakes, Parking
- ☐ Brakes, Service
- ☐ Clutch
- ☑ Coupling Devices
- ☐ Defroster/Heater
- ☐ Drive Line
- ☐ Engine
- ☐ Exhaust
- ☑ Fifth Wheel
- ☐ Fluid Levels
- ☐ Frame and Assembly
- ☐ Front Axle
- ☐ Fuel Tanks
- ☐ Horn
- ☐ Lights
  - Head/Stop
  - Tail/Dash
  - Turn Indicators
  - Clearance/Marker
- ☐ Mirrors
- ☐ Muffler
- ☐ Oil Pressure
- ☐ Radiator
- ☐ Rear End
- ☐ Reflectors
- ☐ Safety Equipment
  - Fire Extinguisher
  - Flags/Flares/Fusees
  - Reflective Triangles
  - Spare Bulbs and Fuses
  - Spare Seal Beam
- ☐ Starter
- ☐ Steering
- ☐ Suspension System
- ☑ Tire Chains
- ☐ Tires
- ☐ Transmission
- ☑ Trip Recorder
- ☐ Wheels and Rims
- ☐ Windows
- ☐ Windshield Wipers
- ☐ Other

TRAILER(S) NO.(S) —

- ☐ Brake Connections
- ☐ Brakes
- ☐ Coupling Devices
- ☐ Coupling (King) Pin
- ☐ Doors
- ☐ Hitch
- ☐ Landing Gear
- ☐ Lights - All
- ☐ Reflectors/Reflective Tape
- ☐ Roof
- ☐ Suspension System
- ☐ Tarpaulin
- ☐ Tires
- ☐ Wheels and Rims
- ☐ Other

Remarks: unit was hot serviced By Tech no grease

☑ CONDITION OF THE ABOVE VEHICLE IS SATISFACTORY

DRIVER'S SIGNATURE: Robert Be Bat

☐ ABOVE DEFECTS CORRECTED

☐ ABOVE DEFECTS NEED NOT BE CORRECTED FOR SAFE OPERATION OF VEHICLE

MECHANIC'S SIGNATURE: _____ DATE: _____

DRIVER'S SIGNATURE: _____ DATE: _____

ORIGINAL

© Copyright 2012 J. J. KELLER & ASSOCIATES, INC.®, Neenah, WI
USA • (800) 327-6868 • Printed in the United States

DRIVER'S VEHICLE INSPECTION REPORT

AS REQUIRED BY THE D.O.T. FEDERAL MOTOR CARRIER SAFETY REGULATIONS

CARRIER: RMCT

ADDRESS: 6211 Chappell rd Alb N.M

DATE: 10-25-17 TIME: 7:30 A.M. _____ P.M.

CHECK ANY DEFECTIVE ITEM AND GIVE DETAILS UNDER "REMARKS" 2824

TRACTOR/ TRUCK NO. _____ ODOMETER READING 498505

- ☐ Air Compressor
- ☐ Air Lines
- ☐ Battery
- ☐ Belts and Hoses
- ☐ Body
- ☐ Brake Accessories
- ☐ Brakes, Parking
- ☐ Brakes, Service
- ☐ Clutch
- ☑ Coupling Devices
- ☐ Defroster/Heater
- ☐ Drive Line
- ☐ Engine
- ☐ Exhaust
- ☑ Fifth Wheel
- ☐ Fluid Levels
- ☐ Frame and Assembly
- ☐ Front Axle
- ☐ Fuel Tanks
- ☐ Horn
- ☐ Lights
  - Head/Stop
  - Tail/Dash
  - Turn Indicators
  - Clearance/Marker
- ☐ Mirrors
- ☐ Muffler
- ☐ Oil Pressure
- ☐ Radiator
- ☐ Rear End
- ☐ Reflectors
- ☐ Safety Equipment
  - Fire Extinguisher
  - Flags/Flares/Fusees
  - Reflective Triangles
  - Spare Bulbs and Fuses
  - Spare Seal Beam
- ☐ Starter
- ☐ Steering
- ☐ Suspension System
- ☑ Tire Chains
- ☐ Tires
- ☐ Transmission
- ☑ Trip Recorder
- ☐ Wheels and Rims
- ☐ Windows
- ☐ Windshield Wipers
- ☐ Other

TRAILER(S) NO.(S) _____

- ☐ Brake Connections
- ☐ Brakes
- ☐ Coupling Devices
- ☐ Coupling (King) Pin
- ☐ Doors
- ☐ Hitch
- ☐ Landing Gear
- ☐ Lights - All
- ☐ Reflectors/Reflective Tape
- ☐ Roof
- ☐ Suspension System
- ☐ Tarpaulin
- ☐ Tires
- ☐ Wheels and Rims
- ☐ Other

Remarks: _____

☑ CONDITION OF THE ABOVE VEHICLE IS SATISFACTORY

DRIVER'S SIGNATURE: Robert BeBout

☐ ABOVE DEFECTS CORRECTED

☐ ABOVE DEFECTS NEED NOT BE CORRECTED FOR SAFE OPERATION OF VEHICLE

MECHANIC'S SIGNATURE: _____ DATE: _____

DRIVER'S SIGNATURE: _____ DATE: _____

ORIGINAL

© Copyright 2012 J. J. KELLER & ASSOCIATES, INC.®, Neenah, WI
USA • (800) 327-6868 • Printed in the United States

1862

DRIVER'S VEHICLE INSPECTION REPORT

AS REQUIRED BY THE D.O.T. FEDERAL MOTOR CARRIER SAFETY REGULATIONS

CARRIER: RMCT

ADDRESS: 6211 Chappell rd Albanim

DATE: 10-26-17 TIME: 7:30 A.M. _____ P.M.

CHECK ANY DEFECTIVE ITEM AND GIVE DETAILS UNDER "REMARKS" 2826

TRACTOR/ TRUCK NO. 4610 ODOMETER READING 498510

- ☐ Air Compressor
- ☐ Air Lines
- ☐ Battery
- ☐ Belts and Hoses
- ☐ Body
- ☐ Brake Accessories
- ☐ Brakes, Parking
- ☐ Brakes, Service
- ☐ Clutch
- ☑ Coupling Devices
- ☐ Defroster/Heater
- ☐ Drive Line
- ☐ Engine
- ☐ Exhaust
- ☑ Fifth Wheel
- ☐ Fluid Levels
- ☐ Frame and Assembly
- ☐ Front Axle
- ☐ Fuel Tanks
- ☐ Horn
- ☐ Lights
  - Head/Stop
  - Tail/Dash
  - Turn Indicators
  - Clearance/Marker
- ☐ Mirrors
- ☐ Muffler
- ☐ Oil Pressure
- ☐ Radiator
- ☐ Rear End
- ☐ Reflectors
- ☐ Safety Equipment
  - Fire Extinguisher
  - Flags/Flares/Fusees
  - Reflective Triangles
  - Spare Bulbs and Fuses
  - Spare Seal Beam
- ☐ Starter
- ☐ Steering
- ☐ Suspension System
- ☑ Tire Chains
- ☐ Tires
- ☐ Transmission
- ☑ Trip Recorder
- ☐ Wheels and Rims
- ☐ Windows
- ☐ Windshield Wipers
- ☐ Other

TRAILER(S) NO.(S) _____

- ☐ Brake Connections
- ☐ Brakes
- ☐ Coupling Devices
- ☐ Coupling (King) Pin
- ☐ Doors
- ☐ Hitch
- ☐ Landing Gear
- ☐ Lights - All
- ☐ Reflectors/Reflective Tape
- ☐ Roof
- ☐ Suspension System
- ☐ Tarpaulin
- ☐ Tires
- ☐ Wheels and Rims
- ☐ Other

Remarks: _____

☑ CONDITION OF THE ABOVE VEHICLE IS SATISFACTORY

DRIVER'S SIGNATURE: Ralph BaBrutt

☐ ABOVE DEFECTS CORRECTED

☐ ABOVE DEFECTS NEED NOT BE CORRECTED FOR SAFE OPERATION OF VEHICLE

MECHANIC'S SIGNATURE: _____ DATE: _____

DRIVER'S SIGNATURE: _____ DATE: _____

ORIGINAL

© Copyright 2012 J. J. KELLER & ASSOCIATES, INC.®, Neenah, WI
USA • (800) 327-6868 • Printed in the United States

1862

DRIVER'S VEHICLE INSPECTION REPORT

AS REQUIRED BY THE D.O.T. FEDERAL MOTOR CARRIER SAFETY REGULATIONS

CARRIER: RMCT

ADDRESS: 6211 Chappell rd Alb N.M

DATE: 10-27-17 TIME: 7:00 A.M. _____ P.M.

CHECK ANY DEFECTIVE ITEM AND GIVE DETAILS UNDER "REMARKS" 2831

TRACTOR/ TRUCK NO. 4610 ODOMETER READING 498521

- ☐ Air Compressor
- ☐ Air Lines
- ☐ Battery
- ☐ Belts and Hoses
- ☐ Body
- ☐ Brake Accessories
- ☐ Brakes, Parking
- ☐ Brakes, Service
- ☐ Clutch
- ☑ Coupling Devices
- ☐ Defroster/Heater
- ☐ Drive Line
- ☐ Engine
- ☐ Exhaust
- ☑ Fifth Wheel
- ☐ Fluid Levels
- ☐ Frame and Assembly
- ☐ Front Axle
- ☐ Fuel Tanks
- ☐ Horn
- ☐ Lights
  - Head/Stop
  - Tail/Dash
  - Turn Indicators
  - Clearance/Marker
- ☐ Mirrors
- ☐ Muffler
- ☐ Oil Pressure
- ☐ Radiator
- ☐ Rear End
- ☐ Reflectors
- ☐ Safety Equipment
  - Fire Extinguisher
  - Flags/Flares/Fusees
  - Reflective Triangles
  - Spare Bulbs and Fuses
  - Spare Seal Beam
- ☐ Starter
- ☐ Steering
- ☐ Suspension System
- ☑ Tire Chains
- ☐ Tires
- ☐ Transmission
- ☑ Trip Recorder
- ☐ Wheels and Rims
- ☐ Windows
- ☐ Windshield Wipers
- ☐ Other

TRAILER(S) NO.(S) _____

- ☐ Brake Connections
- ☐ Brakes
- ☐ Coupling Devices
- ☐ Coupling (King) Pin
- ☐ Doors
- ☐ Hitch
- ☐ Landing Gear
- ☐ Lights - All
- ☐ Reflectors/Reflective Tape
- ☐ Roof
- ☐ Suspension System
- ☐ Tarpaulin
- ☐ Tires
- ☐ Wheels and Rims
- ☐ Other

Remarks: Truck Service

☑ CONDITION OF THE ABOVE VEHICLE IS SATISFACTORY

DRIVER'S SIGNATURE: Rob Bebout

☐ ABOVE DEFECTS CORRECTED

☐ ABOVE DEFECTS NEED NOT BE CORRECTED FOR SAFE OPERATION OF VEHICLE

MECHANIC'S SIGNATURE: _____ DATE: _____

DRIVER'S SIGNATURE: _____ DATE: _____

ORIGINAL

© Copyright 2012 J. J. KELLER & ASSOCIATES, INC.®, Neenah, WI
USA • (800) 327-6868 • Printed in the United States

RMCI INC
GENERAL CONTRACTOR

PO BOX 91447
Albuquerque, NM 87199
(505) 345-0008
(505) 345-0111 Fax

IFTA / IRP / WEIGHT DISTANCE POWER UNIT TRIP HAUL TICKET

EQUIPMENT / MATERIAL HAUL TICKET

MUST FILL OUT MILES / HRS. OF EQUIPMENT BEING HAULED

DATE: 10-23-17

Dispatch Location: 1611
Pickup Location: 1611
Delivery Location: 1611
Return Location: 1611
Vehicle/Trailer Used: 4610

Shop/Maintenance Transport ☐
Vendor Transport ☐
Job Transport ☐

Time Start: ~~7~~ 7:00
Breakfast/Lunch/Dinner: ½
Time End: 5:00
Total Time: 9.5
NM Start Mileage: 498496
NM End Mileage: 498502
Total NM Miles: 6
Out of State Start Mileage: —
Out of State Return Mileage: —
Total Out of State Miles: —

Trip Origin (Latitude/Longitude):
Trip Destination (Latitude/Longitude):

EQUIPMENT / MATERIAL HAULED		MUST FILL OUT MILES / HRS. OF EQUIPMENT BEING HAULED		
UNIT	MODEL / MATERIAL	MILES	HOURS	ACCESSORIES
4610	Internat water	6	9.5	2-loads

Route of Travel: Jobsite

Fuel Purchase (Name & Address):

Number of Gallons:

Price Per Gallon:
Total Amount of Sale:
Purchaser (Name & Address):

Fuel Type:

DELIVERY / LOAD INSTRUCTIONS	
~~7:20 AM~~	start 09865.6
7:20 AM	09870.1
12:50 pm	09874.0

Received By:

Signature: Robert Belbault

Print Name: Robert Belbault

Date: 10-23-17

RMCI INC
GENERAL CONTRACTOR

IFTA / IRP / WEIGHT DISTANCE POWER UNIT TRIP HAUL TICKET

EQUIPMENT / MATERIAL HAUL TICKET

MUST FILL OUT MILES / HRS. OF EQUIPMENT BEING HAULED

PO BOX 91447
Albuquerque, NM 87199
(505) 345-0008
(505) 345-0111 Fax

DATE: 10-24-17

Dispatch Location: 1611
Pickup Location: 1611
Delivery Location: 1611
Return Location: 1611
Vehicle/Trailer Used: 4610

Shop/Maintenance Transport ☐
Vendor Transport ☐
Job Transport ☐

Time Start: 7:00
Breakfast/Lunch/Dinner: 1/2 hr
Time End: 3:30 pm
Total Time: 8
NM Start Mileage: 498502
NM End Mileage: 498505
Total NM Miles: 3
Out of State Start Mileage: —
Out of State Return Mileage: —
Total Out of State Miles: —

Trip Origin (Latitude/Longitude):
Trip Destination (Latitude/Longitude):

EQUIPMENT / MATERIAL HAULED		MUST FILL OUT MILES / HRS. OF EQUIPMENT BEING HAULED		
UNIT	MODEL / MATERIAL	MILES	HOURS	ACCESSORIES
4610	International water	3	8	1 loads

Route of Travel: Jobsite

Fuel Purchase (Name & Address):

Number of Gallons:

Price Per Gallon:
Total Amount of Sale:
Purchaser (Name & Address):

Fuel Type:

DELIVERY / LOAD INSTRUCTIONS Start 09874.0
7:30 Am 09878.5

Received By:

Robert BeBault
Signature

Robert BeBault
Print Name

10-24-17
Date

RMCI INC
GENERAL CONTRACTOR

IFTA / IRP / WEIGHT DISTANCE POWER UNIT TRIP HAUL TICKET

EQUIPMENT / MATERIAL HAUL TICKET

MUST FILL OUT MILES / HRS. OF EQUIPMENT BEING HAULED

PO BOX 91447
Albuquerque, NM 87199
(505) 345-0008
(505) 345-0111 Fax

DATE: 10-25-17

Dispatch Location: 1611
Pickup Location: 1611
Delivery Location: 1611
Return Location: 1611
Vehicle/Trailer Used: 4610

Shop/Maintenance Transport ☐
Vendor Transport ☐
Job Transport ☐

Time Start: 7:30
Breakfast/Lunch/Dinner: 1/2
Time End: 4:00
Total Time: 8.5
NM Start Mileage: 498505
NM End Mileage: RS ~~498505~~ 498510
Total NM Miles: 5
Out of State Start Mileage: —
Out of State Return Mileage: —
Total Out of State Miles: —

Trip Origin (Latitude/Longitude):
Trip Destination (Latitude/Longitude):

EQUIPMENT / MATERIAL HAULED		MUST FILL OUT MILES / HRS. OF EQUIPMENT BEING HAULED		
UNIT	MODEL / MATERIAL	MILES	HOURS	ACCESSORIES
4610	International water	5	8.5	1 loads

Route of Travel: Jobsite

Fuel Purchase (Name & Address):

Number of Gallons:

Price Per Gallon:
Total Amount of Sale:
Purchaser (Name & Address):

Fuel Type:

DELIVERY / LOAD INSTRUCTIONS

Start 09878.5
7:40 AM 09883.1

Received By:

Signature

Robert BeBeault
Print Name

10-25-17
Date

RMCI GENERAL CONTRACTOR

IFTA / IRP / WEIGHT DISTANCE POWER UNIT TRIP HAUL TICKET

EQUIPMENT / MATERIAL HAUL TICKET

MUST FILL OUT MILES / HRS. OF EQUIPMENT BEING HAULED

PO BOX 91447
Albuquerque, NM 87199
(505) 345-0008
(505) 345-0111 Fax

DATE: 10-26-17

Dispatch Location: 1611
Pickup Location: 1611
Delivery Location: 1611
Return Location: 1611
Vehicle/Trailer Used: 4610

Shop/Maintenance Transport ☐
Vendor Transport ☐
Job Transport ☐

Time Start: 7:30
Breakfast/Lunch/Dinner: ½ hr
Time End: 3:30
Total Time: 7.5
NM Start Mileage: 498510
NM End Mileage: 498521
Total NM Miles: 11
Out of State Start Mileage: ~~—~~
Out of State Return Mileage: ~~—~~
Total Out of State Miles: ~~—~~

Trip Origin (Latitude/Longitude):
Trip Destination (Latitude/Longitude):

EQUIPMENT / MATERIAL HAULED		MUST FILL OUT MILES / HRS. OF EQUIPMENT BEING HAULED		
UNIT	MODEL / MATERIAL	MILES	HOURS	ACCESSORIES
4610	Interrat water	11	7.5	3 loads

Route of Travel: Jobsite

Fuel Purchase (Name & Address):

Number of Gallons:

Price Per Gallon:
Total Amount of Sale:
Purchaser (Name & Address):

Fuel Type:

DELIVERY / LOAD INSTRUCTIONS	Start 09883.1
7:50 Am	09887.6
10:10 Am	09890.2

Received By:

Signature

Robert BeBault
Print Name

10-26-17
Date

RMCI GENERAL CONTRACTOR

IFTA / IRP / WEIGHT DISTANCE POWER UNIT TRIP HAUL TICKET

EQUIPMENT / MATERIAL HAUL TICKET

MUST FILL OUT MILES / HRS. OF EQUIPMENT BEING HAULED

PO BOX 91447
Albuquerque, NM 87199
(505) 345-0008
(505) 345-0111 Fax

DATE: 10-27-17

Dispatch Location: 1611
Pickup Location: 1611
Delivery Location: 1611
Return Location: 1611
Vehicle/Trailer Used: 4610

Shop/Maintenance Transport ☐
Vendor Transport ☐
Job Transport ☐

Time Start: 7:00
Breakfast/Lunch/Dinner: —
Time End: 1:00 pm
Total Time: 6
NM Start Mileage: 498521
NM End Mileage: 498523
Total NM Miles: 2
Out of State Start Mileage: —
Out of State Return Mileage: —
Total Out of State Miles: —

Trip Origin (Latitude/Longitude):
Trip Destination (Latitude/Longitude):

EQUIPMENT / MATERIAL HAULED		MUST FILL OUT MILES / HRS. OF EQUIPMENT BEING HAULED		
UNIT	MODEL / MATERIAL	MILES	HOURS	ACCESSORIES
4610	Internat water	2	6	1 loads

Route of Travel: Jobsite

Fuel Purchase (Name & Address):

Number of Gallons:

Price Per Gallon:
Total Amount of Sale:
Purchaser (Name & Address):

Fuel Type:

DELIVERY / LOAD INSTRUCTIONS Start 09890.2

7:20 Am 09894.8

Received By:

Robert Bedsaul
Signature

Robert Bedsaul
Print Name

10-27-17
Date

RMCI INC
GENERAL CONTRACTOR
N.M. LICENSE No. 31964

EXCAVATOR CHECK LIST
LISTA DE REVISION DE ESCAVADORA

MODEL *(modelo)*	WEEK ENDING *(fin de semana)*
PC - 200	10-28-17
ID NO. *(numero de la maquina)* 1107	OPERATOR *(operador)* Jesus Moya
JOB NO. *(numero de trabajo)* 1611	HOURS / MILEAGE *(horas o millaje)* 2124

The Following Items To Be Checked Or Lubricated Daily As They Apply
(revisar o lubricar esta lista a diario)

CHECK *(revisar)*	MON *(lun)*	TUES *(mar)*	WED *(mier)*	THURS *(juev)*	FRI *(Vier)*
ENGINE OIL *(lubricasión del motor)*	✓	✓	✓	✓	✓
AIR CLEANER *(filtro de aire)*	✓	✓	✓	✓	✓
SWIVEL GEAR CASE *(caja de mesa rotadora)*	✓	✓	✓	✓	✓
RADIATOR *(radiador)*	✓	✓	✓	✓	✓
FUEL TANK *(tanque de disel o gasolina)*	✓	✓	✓	✓	✓
HYDRAULIC FLUID LEVEL *(nivel de aciete hidraulico)*	✓	✓	✓	✓	✓
TRACKS-CLEAN-TENSION *(traques – limpios y ajustasión propia)*	✓	✓	✓	✓	✓
SWINGBREAK *(freno de mesa de rotación)*	✓	✓	✓	✓	✓
HORN/BACK-UP-ALARM *(pito/alarma de reversa)*	✓	✓	✓	✓	✓
GAUGES OR INDICATORS *(indicadores de sistemas)*	✓	✓	✓	✓	✓
QUICK COUPLER *(acoplador rapido de cubeta)*	✓	✓	✓	✓	✓
CAB AND WINDOWS CLEAN *(cabina y vidrios limpios)*	✓	✓	✓	✓	

LUBRICATE *(lubricasion)*	MON *(lun)*	TUES *(mar)*	WED *(mier)*	THURS *(juev)*	FRI *(Vier)*
HOUSE TABLE *(mesa de rotación)*					
WORKING PINS *(pernos del braso)*					
BUCKET PINS *(pernos de cubeta)*	✓	✓	✓	✓	✓

REMARKS/PROBLEMS *(reporte de problemas)*: _____

Operator (operador)	Date (fecha)	Superintendent *(superintendente)*	Date (fecha)
Moya	10-27-17	ED Hyde	10 30 17

RMCI INC
GENERAL CONTRACTOR
N.M. LICENSE No. 31964

EQUIPMENT CHECK LIST
LISTA DE REVISION DE MAQUINARIA

MODEL *(modelo)* ~~JD Backhoe~~ Volvo	WEEK ENDING *(fin de semana)* ~~9-2-17~~ 10-28-17
ID NO. *(numero de la maquina)* ~~# 1415~~ 2310	OPERATOR *(operador)* Jesus Moya
JOB NO. *(numero de trabajo)* 1611	HOURS / MILEAGE *(horas o millaje)* 12355

The Following Items To Be Checked Or Lubricated Daily As They Apply
(revisar o lubricar esta lista a diario)

CHECK *(revisar)*	MON *(lun)*	TUES *(mar)*	WED *(mier)*	THURS *(juev)*	FRI *(Vier)*
ENGINE OIL *(lubricasion del motor)*	✓	✓	✓	✓	✓
AIR CLEANER *(filtro de aire)*	✓	✓	✓	✓	✓
TRANSMISSION *(trasmisión)*	✓	✓	✓	✓	✓
RADIATOR *(radiador)*	✓	✓	✓	✓	✓
FUEL TANK *(tanque de disel o gasolina)*	✓	✓	✓	✓	✓
AIR TANK *(tanque de aire)*					
TIRES *(presion de llantas)*	✓	✓	✓	✓	✓
PARKING BRAKE/BRAKES *(freno de mano/frenos)*	✓	✓	✓	✓	✓
HORN/BACK-UP-ALARM *(pito/alarma de reversa)*	✓	✓	✓	✓	✓
GAUGES/OR INDICATORS (indicadores de sistemas)	✓	✓	✓	✓	✓
CAB AND WINDOWS CLEAN (*cabina y vidrios limpios*)	✓	✓	✓	✓	✓

LUBRICATE *(lubricasion)*	MON *(lun)*	TUES *(mar)*	WED *(mier)*	THURS *(juev)*	FRI *(Vier)*
STEERING OR SWIVEL PINS *(pernos de dirección)*					
BUCKET PINS *(pernos de cubeta)*	✓	✓	✓	✓	✓

REMARKS/PROBLEMS *(reporte de problemas)*:

Operator (operador)	Date (fecha)	Superintendent *(superintendente)*	Date (fecha)
Jmoya	10-27-17	Ed Hyde	10-30-17

RMCI INC
GENERAL CONTRACTOR
N.M. LICENSE No. 31964

EQUIPMENT CHECK LIST
LISTA DE REVISION DE MAQUINARIA

MODEL *(modelo)* JD BackHoe	WEEK ENDING *(fin de semana)* 10-28-17
ID NO. *(numero de la maquina)* # 1415	OPERATOR *(operador)* Jesus Reyes
JOB NO. *(numero de trabajo)* 1611	HOURS / MILEAGE *(horas o millaje)* 5014

The Following Items To Be Checked Or Lubricated Daily As They Apply
(revisar o lubricar esta lista a diario)

CHECK *(revisar)*	MON *(lun)*	TUES *(mar)*	WED *(mier)*	THURS *(juev)*	FRI *(Vier)*
ENGINE OIL *(lubricasion del motor)*	✓	✓	✓	✓	✓
AIR CLEANER *(filtro de aire)*	✓	✓	✓	✓	✓
TRANSMISSION *(trasmisión)*	✓	✓	✓	✓	✓
RADIATOR *(radiador)*	✓	✓	✓	✓	✓
FUEL TANK *(tanque de disel o gasolina)*	✓	✓	✓	✓	✓
AIR TANK *(tanque de aire)*	✓				
TIRES *(presion de llantas)*	✓	✓	✓	✓	✓
PARKING BRAKE/BRAKES *(freno de mano/frenos)*	✓	✓	✓	✓	✓
HORN/BACK-UP-ALARM *(pito/alarma de reversa)*	✓	✓	✓	✓	✓
GAUGES/OR INDICATORS (indicadores de sistemas)	✓	✓	✓	✓	✓
CAB AND WINDOWS CLEAN (*cabina y vidrios limpios*)	✓	✓	✓	✓	✓

LUBRICATE *(lubricasion)*	MON *(lun)*	TUES *(mar)*	WED *(mier)*	THURS *(juev)*	FRI *(Vier)*
STEERING OR SWIVEL PINS *(pernos de dirección)*	✓				
BUCKET PINS *(pernos de cubeta)*	✓	✓	✓	✓	✓

REMARKS/PROBLEMS *(reporte de problemas)*: _____

Operator (operador)	Date (fecha)	Superintendent *(superintendente)*	Date (fecha)
Jesus Reyes	10-27-17	Ed Hyde	10-30-17

DRIVER'S VEHICLE INSPECTION REPORT

AS REQUIRED BY THE D.O.T. FEDERAL MOTOR CARRIER SAFETY REGULATIONS

CARRIER: RMCI

ADDRESS: 6211 chappell rd #16 n.m

DATE: 10-30-17 TIME: 7:00 A.M. P.M.

CHECK ANY DEFECTIVE ITEM AND GIVE DETAILS UNDER "REMARKS" 2836

TRACTOR/ TRUCK NO. 4610 ODOMETER READING 498523

- ☐ Air Compressor
- ☐ Air Lines
- ☐ Battery
- ☐ Belts and Hoses
- ☐ Body
- ☐ Brake Accessories
- ☐ Brakes, Parking
- ☐ Brakes, Service
- ☐ Clutch
- ☑ Coupling Devices
- ☐ Defroster/Heater
- ☐ Drive Line
- ☐ Engine
- ☐ Exhaust
- ☑ Fifth Wheel
- ☐ Fluid Levels
- ☐ Frame and Assembly
- ☐ Front Axle
- ☐ Fuel Tanks
- ☐ Horn
- ☐ Lights
  - Head/Stop
  - Tail/Dash
  - Turn Indicators
  - Clearance/Marker
- ☐ Mirrors
- ☐ Muffler
- ☐ Oil Pressure
- ☐ Radiator
- ☐ Rear End
- ☐ Reflectors
- ☐ Safety Equipment
  - Fire Extinguisher
  - Flags/Flares/Fusees
  - Reflective Triangles
  - Spare Bulbs and Fuses
  - Spare Seal Beam
- ☐ Starter
- ☐ Steering
- ☐ Suspension System
- ☑ Tire Chains
- ☐ Tires
- ☐ Transmission
- ☑ Trip Recorder
- ☐ Wheels and Rims
- ☐ Windows
- ☐ Windshield Wipers
- ☐ Other

TRAILER(S) NO.(S) —

- ☐ Brake Connections
- ☐ Brakes
- ☐ Coupling Devices
- ☐ Coupling (King) Pin
- ☐ Doors
- ☐ Hitch
- ☐ Landing Gear
- ☐ Lights - All
- ☐ Reflectors/Reflective Tape
- ☐ Roof
- ☐ Suspension System
- ☐ Tarpaulin
- ☐ Tires
- ☐ Wheels and Rims
- ☐ Other

Remarks:

☑ CONDITION OF THE ABOVE VEHICLE IS SATISFACTORY

DRIVER'S SIGNATURE: Ruth Bobbitt

☐ ABOVE DEFECTS CORRECTED

☐ ABOVE DEFECTS NEED NOT BE CORRECTED FOR SAFE OPERATION OF VEHICLE

MECHANIC'S SIGNATURE: _____ DATE: _____

DRIVER'S SIGNATURE: _____ DATE: _____

ORIGINAL

© Copyright 2012 J. J. KELLER & ASSOCIATES, INC.®, Neenah, WI
USA • (800) 327-6868 • Printed in the United States

DRIVER'S VEHICLE INSPECTION REPORT

AS REQUIRED BY THE D.O.T. FEDERAL MOTOR CARRIER SAFETY REGULATIONS

CARRIER: RMCI

ADDRESS: 6211 Chappell rd Alb n.m

DATE: 10-31-17 TIME: 7:00 A.M. ____ P.M.

CHECK ANY DEFECTIVE ITEM AND GIVE DETAILS UNDER "REMARKS" 2842

TRACTOR/ TRUCK NO. 4610 ODOMETER READING 408526

- ☐ Air Compressor
- ☐ Air Lines
- ☐ Battery
- ☐ Belts and Hoses
- ☐ Body
- ☐ Brake Accessories
- ☐ Brakes, Parking
- ☐ Brakes, Service
- ☐ Clutch
- ☑ Coupling Devices
- ☐ Defroster/Heater
- ☐ Drive Line
- ☐ Engine
- ☐ Exhaust
- ☑ Fifth Wheel
- ☐ Fluid Levels
- ☐ Frame and Assembly
- ☐ Front Axle
- ☐ Fuel Tanks
- ☐ Horn
- ☐ Lights
  - Head/Stop
  - Tail/Dash
  - Turn Indicators
  - Clearance/Marker
- ☐ Mirrors
- ☐ Muffler
- ☐ Oil Pressure
- ☐ Radiator
- ☐ Rear End
- ☐ Reflectors
- ☐ Safety Equipment
  - Fire Extinguisher
  - Flags/Flares/Fusees
  - Reflective Triangles
  - Spare Bulbs and Fuses
  - Spare Seal Beam
- ☐ Starter
- ☐ Steering
- ☐ Suspension System
- ☑ Tire Chains
- ☐ Tires
- ☐ Transmission
- ☑ Trip Recorder
- ☐ Wheels and Rims
- ☐ Windows
- ☐ Windshield Wipers
- ☐ Other

TRAILER(S) NO.(S) ____

- ☐ Brake Connections
- ☐ Brakes
- ☐ Coupling Devices
- ☐ Coupling (King) Pin
- ☐ Doors
- ☐ Hitch
- ☐ Landing Gear
- ☐ Lights - All
- ☐ Reflectors/Reflective Tape
- ☐ Roof
- ☐ Suspension System
- ☐ Tarpaulin
- ☐ Tires
- ☐ Wheels and Rims
- ☐ Other

Remarks: ____

☑ CONDITION OF THE ABOVE VEHICLE IS SATISFACTORY

DRIVER'S SIGNATURE: [signature]

☐ ABOVE DEFECTS CORRECTED

☐ ABOVE DEFECTS NEED NOT BE CORRECTED FOR SAFE OPERATION OF VEHICLE

MECHANIC'S SIGNATURE: ____ DATE: ____

DRIVER'S SIGNATURE ____ DATE: ____

ORIGINAL

© Copyright 2012 J. J. KELLER & ASSOCIATES, INC.®, Neenah, WI USA • (800) 327-6868 • Printed in the United States

DRIVER'S VEHICLE INSPECTION REPORT

AS REQUIRED BY THE D.O.T. FEDERAL MOTOR CARRIER SAFETY REGULATIONS

CARRIER: RMCI

ADDRESS: 6211 chappell rd Alb N.M

DATE: 11-1-17 TIME: 7:00 A.M. _____ P.M.

CHECK ANY DEFECTIVE ITEM AND GIVE DETAILS UNDER "REMARKS"

TRACTOR/ TRUCK NO. 4610 ODOMETER READING 49853

- ☐ Air Compressor
- ☐ Air Lines
- ☐ Battery
- ☐ Belts and Hoses
- ☐ Body
- ☐ Brake Accessories
- ☐ Brakes, Parking
- ☐ Brakes, Service
- ☐ Clutch
- ☑ Coupling Devices
- ☐ Defroster/Heater
- ☐ Drive Line
- ☐ Engine
- ☐ Exhaust
- ☑ Fifth Wheel
- ☐ Fluid Levels
- ☐ Frame and Assembly
- ☐ Front Axle
- ☐ Fuel Tanks
- ☐ Horn
- ☐ Lights
  - Head/Stop
  - Tail/Dash
  - Turn Indicators
  - Clearance/Marker
- ☐ Mirrors
- ☐ Muffler
- ☐ Oil Pressure
- ☐ Radiator
- ☐ Rear End
- ☐ Reflectors
- ☐ Safety Equipment
  - Fire Extinguisher
  - Flags/Flares/Fusees
  - Reflective Triangles
  - Spare Bulbs and Fuses
  - Spare Seal Beam
- ☐ Starter
- ☐ Steering
- ☐ Suspension System
- ☑ Tire Chains
- ☐ Tires
- ☐ Transmission
- ☑ Trip Recorder
- ☐ Wheels and Rims
- ☐ Windows
- ☐ Windshield Wipers
- ☐ Other

TRAILER(S) NO.(S) —

- ☐ Brake Connections
- ☐ Brakes
- ☐ Coupling Devices
- ☐ Coupling (King) Pin
- ☐ Doors
- ☐ Hitch
- ☐ Landing Gear
- ☐ Lights - All
- ☐ Reflectors/Reflective Tape
- ☐ Roof
- ☐ Suspension System
- ☐ Tarpaulin
- ☐ Tires
- ☐ Wheels and Rims
- ☐ Other

Remarks: _____

☑ CONDITION OF THE ABOVE VEHICLE IS SATISFACTORY

DRIVER'S SIGNATURE: Robert B Ballew

☐ ABOVE DEFECTS CORRECTED

☐ ABOVE DEFECTS NEED NOT BE CORRECTED FOR SAFE OPERATION OF VEHICLE

MECHANIC'S SIGNATURE: _____ DATE: _____

DRIVER'S SIGNATURE: _____ DATE: _____

ORIGINAL

© Copyright 2012 J. J. KELLER & ASSOCIATES, INC.®, Neenah, WI
USA • (800) 327-6868 • Printed in the United States

1862

DRIVER'S VEHICLE INSPECTION REPORT

AS REQUIRED BY THE D.O.T. FEDERAL MOTOR CARRIER SAFETY REGULATIONS

CARRIER: RMCI

ADDRESS: 6211 chappell rd Albnm

DATE: 11-2-17 TIME: 7:00 A.M. _____ P.M.

CHECK ANY DEFECTIVE ITEM AND GIVE DETAILS UNDER "REMARKS"

TRACTOR/ TRUCK NO. 4610 ODOMETER READING 498535

- ☐ Air Compressor
- ☐ Air Lines
- ☐ Battery
- ☐ Belts and Hoses
- ☐ Body
- ☐ Brake Accessories
- ☐ Brakes, Parking
- ☐ Brakes, Service
- ☐ Clutch
- ☑ Coupling Devices
- ☐ Defroster/Heater
- ☐ Drive Line
- ☐ Engine
- ☐ Exhaust
- ☑ Fifth Wheel
- ☐ Fluid Levels
- ☐ Frame and Assembly
- ☐ Front Axle
- ☐ Fuel Tanks
- ☐ Horn
- ☐ Lights
  - Head/Stop
  - Tail/Dash
  - Turn Indicators
  - Clearance/Marker
- ☐ Mirrors
- ☐ Muffler
- ☐ Oil Pressure
- ☐ Radiator
- ☐ Rear End
- ☐ Reflectors
- ☐ Safety Equipment
  - Fire Extinguisher
  - Flags/Flares/Fusees
  - Reflective Triangles
  - Spare Bulbs and Fuses
  - Spare Seal Beam
- ☐ Starter
- ☐ Steering
- ☐ Suspension System
- ☑ Tire Chains
- ☐ Tires
- ☐ Transmission
- ☑ Trip Recorder
- ☐ Wheels and Rims
- ☐ Windows
- ☐ Windshield Wipers
- ☐ Other

TRAILER(S) NO.(S) ~~_____~~

- ☐ Brake Connections
- ☐ Brakes
- ☐ Coupling Devices
- ☐ Coupling (King) Pin
- ☐ Doors
- ☐ Hitch
- ☐ Landing Gear
- ☐ Lights - All
- ☐ Reflectors/Reflective Tape
- ☐ Roof
- ☐ Suspension System
- ☐ Tarpaulin
- ☐ Tires
- ☐ Wheels and Rims
- ☐ Other

Remarks: _____

☑ CONDITION OF THE ABOVE VEHICLE IS SATISFACTORY

DRIVER'S SIGNATURE: [signature]

☐ ABOVE DEFECTS CORRECTED

☐ ABOVE DEFECTS NEED NOT BE CORRECTED FOR SAFE OPERATION OF VEHICLE

MECHANIC'S SIGNATURE: _____ DATE: _____

DRIVER'S SIGNATURE: _____ DATE: _____

ORIGINAL

© Copyright 2012 J. J. KELLER & ASSOCIATES, INC.®, Neenah, WI USA • (800) 327-6868 • Printed in the United States

DRIVER'S VEHICLE INSPECTION REPORT

AS REQUIRED BY THE D.O.T. FEDERAL MOTOR CARRIER SAFETY REGULATIONS

CARRIER: RMCT

ADDRESS: 6211 chappell rd Alb n.m

DATE: 11-3-17 TIME: 7:00 A.M. _____ P.M.

CHECK ANY DEFECTIVE ITEM AND GIVE DETAILS UNDER "REMARKS"

TRACTOR/ TRUCK NO. _____ ODOMETER READING 498539

- ☐ Air Compressor
- ☐ Air Lines
- ☐ Battery
- ☐ Belts and Hoses
- ☐ Body
- ☐ Brake Accessories
- ☐ Brakes, Parking
- ☐ Brakes, Service
- ☐ Clutch
- ☑ Coupling Devices
- ☐ Defroster/Heater
- ☐ Drive Line
- ☐ Engine
- ☐ Exhaust
- ☑ Fifth Wheel
- ☐ Fluid Levels
- ☐ Frame and Assembly
- ☐ Front Axle
- ☐ Fuel Tanks
- ☐ Horn
- ☐ Lights
  - Head/Stop
  - Tail/Dash
  - Turn Indicators
  - Clearance/Marker
- ☐ Mirrors
- ☐ Muffler
- ☐ Oil Pressure
- ☐ Radiator
- ☐ Rear End
- ☐ Reflectors
- ☐ Safety Equipment
  - Fire Extinguisher
  - Flags/Flares/Fusees
  - Reflective Triangles
  - Spare Bulbs and Fuses
  - Spare Seal Beam
- ☐ Starter
- ☐ Steering
- ☐ Suspension System
- ☑ Tire Chains
- ☐ Tires
- ☐ Transmission
- ☑ Trip Recorder
- ☐ Wheels and Rims
- ☐ Windows
- ☐ Windshield Wipers
- ☐ Other

TRAILER(S) NO.(S) —

- ☐ Brake Connections
- ☐ Brakes
- ☐ Coupling Devices
- ☐ Coupling (King) Pin
- ☐ Doors
- ☐ Hitch
- ☐ Landing Gear
- ☐ Lights - All
- ☐ Reflectors/Reflective Tape
- ☐ Roof
- ☐ Suspension System
- ☐ Tarpaulin
- ☐ Tires
- ☐ Wheels and Rims
- ☐ Other

Remarks: _____

☑ CONDITION OF THE ABOVE VEHICLE IS SATISFACTORY

DRIVER'S SIGNATURE: Robert Rios

☐ ABOVE DEFECTS CORRECTED

☐ ABOVE DEFECTS NEED NOT BE CORRECTED FOR SAFE OPERATION OF VEHICLE

MECHANIC'S SIGNATURE: _____ DATE: _____

DRIVER'S SIGNATURE: _____ DATE: _____

ORIGINAL

© Copyright 2012 J. J. KELLER & ASSOCIATES, INC.®, Neenah, WI
USA • (800) 327-6868 • Printed in the United States

1862

RMCI INC
GENERAL CONTRACTOR
N.M. LICENSE No. 31964

EQUIPMENT CHECK LIST
LISTA DE REVISION DE MAQUINARIA

MODEL *(modelo)* JD BackHoe	WEEK ENDING *(fin de semana* ~~07/15~~ 11-04-17
ID NO. *(numero de la maquina)* # 1415	OPERATOR *(operador)* Jesus Moya
JOB NO. *(numero de trabajo)* 1611	HOURS / MILEAGE *(horas o millaje)*

The Following Items To Be Checked Or Lubricated Daily As They Apply
(revisar o lubricar esta lista a diario)

CHECK *(revisar)*	MON *(lun)*	TUES *(mar)*	WED *(mier)*	THURS *(juev)*	FRI *(Vier)*
ENGINE OIL *(lubricasion del motor)*	✓	✓	✓	✓	✓
AIR CLEANER *(filtro de aire)*	✓	✓	✓	✓	✓
TRANSMISSION *(trasmisión)*	✓	✓	✓	✓	✓
RADIATOR *(radiador)*	✓	✓	✓	✓	✓
FUEL TANK *(tanque de disel o gasolina)*	✓	✓	✓	✓	✓
AIR TANK *(tanque de aire)*					
TIRES *(presion de llantas)*	✓	✓	✓	✓	✓
PARKING BRAKE/BRAKES *(freno de mano/frenos)*	✓	✓	✓	✓	✓
HORN/BACK-UP-ALARM *(pito/alarma de reversa)*	✓	✓	✓	✓	✓
GAUGES/OR INDICATORS (indicadores de sistemas)	✓	✓	✓	✓	✓
CAB AND WINDOWS CLEAN (*cabina y vidrios limpios*)	✓	✓	✓	✓	✓

LUBRICATE *(lubricasion)*	MON *(lun)*	TUES *(mar)*	WED *(mier)*	THURS *(juev)*	FRI *(Vier)*
STEERING OR SWIVEL PINS *(pernos de dirección)*					
BUCKET PINS *(pernos de cubeta)*	✓	✓	✓	✓	✓

REMARKS/PROBLEMS *(reporte de problemas)*: HEAD LINER NEEDS REATTACHED, THE ALARM (DEWALT) KEEPS FALLING out.

Operator (operador)	Date (fecha)	Superintendent *(superintendente)*	Date (fecha)
J Moya	11-03-17	Ed Hyde	11-6-17

RMCI INC
GENERAL CONTRACTOR
N.M. LICENSE No. 31964

EQUIPMENT CHECK LIST
LISTA DE REVISION DE MAQUINARIA

MODEL *(modelo)* ~~JD Backhoe~~ Volvo	WEEK ENDING *(fin de semana)* ~~9-24-17~~ 11-04-17
ID NO. *(numero de la maquina)* ~~#4215~~ 2310	OPERATOR *(operador)* Jesus Moya
JOB NO. *(numero de trabajo)* 1611	HOURS / MILEAGE *(horas o millaje)* 12368

The Following Items To Be Checked Or Lubricated Daily As They Apply
(revisar o lubricar esta lista a diario)

CHECK *(revisar)*	MON *(lun)*	TUES *(mar)*	WED *(mier)*	THURS *(juev)*	FRI *(Vier)*
ENGINE OIL *(lubricasion del motor)*	✓	✓	✓	✓	✓
AIR CLEANER *(filtro de aire)*	✓	✓	✓	✓	✓
TRANSMISSION *(trasmisión)*	✓	✓	✓	✓	✓
RADIATOR *(radiador)*	✓	✓	✓	✓	✓
FUEL TANK *(tanque de disel o gasolina)*	✓	✓	✓	✓	✓
AIR TANK *(tanque de aire)*	✓	✓	✓	✓	✓
TIRES *(presion de llantas)*	✓	✓	✓	✓	✓
PARKING BRAKE/BRAKES *(freno de mano/frenos)*	✓	✓	✓	✓	✓
HORN/BACK-UP-ALARM *(pito/alarma de reversa)*	✓	✓	✓	✓	✓
GAUGES/OR INDICATORS (indicadores de sistemas)	✓	✓	✓	✓	✓
CAB AND WINDOWS CLEAN (*cabina y vidrios limpios*)	✓	✓	✓	✓	✓

LUBRICATE *(lubricasion)*	MON *(lun)*	TUES *(mar)*	WED *(mier)*	THURS *(juev)*	FRI *(Vier)*
STEERING OR SWIVEL PINS *(pernos de dirección)*					
BUCKET PINS *(pernos de cubeta)*	✓	✓	✓	✓	✓

REMARKS/PROBLEMS *(reporte de problemas)*: Fire Extinguisher Mounting Bracket needs mounted.

Operator (operador)	Date (fecha)	Superintendent *(superintendente)*	Date (fecha)
Jmoya	11-03-17	Ed Hyde	11-6-17

RMCI INC
GENERAL CONTRACTOR
N.M. LICENSE No. 31964

EXCAVATOR CHECK LIST
LISTA DE REVISION DE ESCAVADORA

MODEL *(modelo)*	WEEK ENDING *(fin de semana)*
PC - 200	11-04-17
ID NO. *(numero de la maquina)* 1107	OPERATOR *(operador)* Jesus Mayo
JOB NO. *(numero de trabajo)* 1611	HOURS / MILEAGE *(horas o millaje)* 2145

The Following Items To Be Checked Or Lubricated Daily As They Apply
(revisar o lubricar esta lista a diario)

CHECK *(revisar)*	MON *(lun)*	TUES *(mar)*	WED *(mier)*	THURS *(juev)*	FRI *(Vier)*
ENGINE OIL *(lubricasión del motor)*	✓	✓	✓	✓	✓
AIR CLEANER *(filtro de aire)*	✓	✓	✓	✓	✓
SWIVEL GEAR CASE *(caja de mesa rotadora)*	✓	✓	✓	✓	✓
RADIATOR *(radiador)*	✓	✓	✓	✓	✓
FUEL TANK *(tanque de disel o gasolina)*	✓	✓	✓	✓	✓
HYDRAULIC FLUID LEVEL *(nivel de aciete hidraulico)*	✓	✓	✓	✓	✓
TRACKS-CLEAN-TENSION *(traques – limpios y ajustasión propia)*	✓	✓	✓	✓	✓
SWINGBREAK *(freno de mesa de rotación)*	✓	✓	✓	✓	✓
HORN/BACK-UP-ALARM *(pito/alarma de reversa)*	✓	✓	✓	✓	✓
GAUGES OR INDICATORS *(indicadores de sistemas)*	✓	✓	✓	✓	✓
QUICK COUPLER *(acoplador rapido de cubeta)*	✓	✓	✓	✓	✓
CAB AND WINDOWS CLEAN (*cabina y vidrios limpios)*	✓	✓	✓	✓	✓

LUBRICATE *(lubricasion)*	MON *(lun)*	TUES *(mar)*	WED *(mier)*	THURS *(juev)*	FRI *(Vier)*
HOUSE TABLE *(mesa de rotación)*	✓		✓		✓
WORKING PINS *(pernos del braso)*	✓		✓		
BUCKET PINS *(pernos de cubeta)*	✓		✓		

REMARKS/PROBLEMS *(reporte de problemas)*:

Operator (operador)	Date (fecha)	Superintendent *(superintendente)*	Date (fecha)
Jmayo	11-3-17		11-6-17

RMCI INC
GENERAL CONTRACTOR

IFTA / IRP / WEIGHT DISTANCE POWER UNIT TRIP HAUL TICKET

EQUIPMENT / MATERIAL HAUL TICKET

MUST FILL OUT MILES / HRS. OF EQUIPMENT BEING HAULED

PO BOX 91447
Albuquerque, NM 87199
(505) 345-0008
(505) 345-0111 Fax

DATE: 10-30-17

Dispatch Location: 1611
Pickup Location: 1611
Delivery Location: 1611
Return Location: 1611
Vehicle/Trailer Used: 4610

Shop/Maintenance Transport ☐
Vendor Transport ☐
Job Transport ☐

Time Start: 7:00
Breakfast/Lunch/Dinner: ½
Time End: 4:30
Total Time: ~~8.5~~ 9
NM Start Mileage: 498523
NM End Mileage: 498526
Total NM Miles: 3
Out of State Start Mileage: —
Out of State Return Mileage: —
Total Out of State Miles: —

Trip Origin (Latitude/Longitude):
Trip Destination (Latitude/Longitude):

EQUIPMENT / MATERIAL HAULED		MUST FILL OUT MILES / HRS. OF EQUIPMENT BEING HAULED		
UNIT	MODEL / MATERIAL	MILES	HOURS	ACCESSORIES
4610	Internat water	3	~~8.5~~ 9	2 loads

Route of Travel: Jobsite

Fuel Purchase (Name & Address):

Number of Gallons:

Price Per Gallon:
Total Amount of Sale:
Purchaser (Name & Address):

Fuel Type:

DELIVERY / LOAD INSTRUCTIONS	start 09894.8
7:25 am	09899.3
12:35 pm	09902.7

Received By:

Signature

Robert BeBault
Print Name

10-30-17
Date

RMCI INC
GENERAL CONTRACTOR

IFTA / IRP / WEIGHT DISTANCE POWER UNIT TRIP HAUL TICKET

EQUIPMENT / MATERIAL HAUL TICKET

MUST FILL OUT MILES / HRS. OF EQUIPMENT BEING HAULED

PO BOX 91447
Albuquerque, NM 87199
(505) 345-0008
(505) 345-0111 Fax

DATE: 11-1-17

Dispatch Location: 1611
Pickup Location: 1611
Delivery Location: 1611
Return Location: 1611
Vehicle/Trailer Used: 4610

Shop/Maintenance Transport ☐
Vendor Transport ☐
Job Transport ☐

Time Start: 7:00
Breakfast/Lunch/Dinner: 1/2
Time End: 3:30
Total Time: 8
NM Start Mileage: 498532
NM End Mileage: 498535
Total NM Miles: 3
Out of State Start Mileage: —
Out of State Return Mileage: —
Total Out of State Miles: —

Trip Origin (Latitude/Longitude):
Trip Destination (Latitude/Longitude):

EQUIPMENT / MATERIAL HAULED		MUST FILL OUT MILES / HRS. OF EQUIPMENT BEING HAULED		
UNIT	MODEL / MATERIAL	MILES	HOURS	ACCESSORIES
4610	Interrat water	3	8	2 loads

Route of Travel: Jobsite

Fuel Purchase (Name & Address):

Number of Gallons:

Price Per Gallon:
Total Amount of Sale:
Purchaser (Name & Address):

Fuel Type:

DELIVERY / LOAD INSTRUCTIONS	start 09916.9
7:15	09916.6
2:30	09919.1

Received By:

Robert BeBault
Signature

Robert BeBault
Print Name

11-1-17
Date

RMCI INC
GENERAL CONTRACTOR

IFTA / IRP / WEIGHT DISTANCE POWER UNIT TRIP HAUL TICKET

EQUIPMENT / MATERIAL HAUL TICKET

MUST FILL OUT MILES / HRS. OF EQUIPMENT BEING HAULED

PO BOX 91447
Albuquerque, NM 87199
(505) 345-0008
(505) 345-0111 Fax

DATE: 11-3-17

Dispatch Location: 1611
Pickup Location: 1611
Delivery Location: 1611
Return Location: 1611
Vehicle/Trailer Used: 4610

Shop/Maintenance Transport ☐
Vendor Transport ☐
Job Transport ☐

Time Start: 7.00
Breakfast/Lunch/Dinner:
Time End: 9.00
Total Time: 2
NM Start Mileage: 498539
NM End Mileage: 498542
Total NM Miles: 3
Out of State Start Mileage: —
Out of State Return Mileage: —
Total Out of State Miles: —

Trip Origin (Latitude/Longitude):
Trip Destination (Latitude/Longitude):

EQUIPMENT / MATERIAL HAULED		MUST FILL OUT MILES / HRS. OF EQUIPMENT BEING HAULED		
UNIT	MODEL / MATERIAL	MILES	HOURS	ACCESSORIES
4610	Internat water	3	2	1 loads

Route of Travel: Jobsite

Fuel Purchase (Name & Address):

Number of Gallons:

Price Per Gallon:
Total Amount of Sale:
Purchaser (Name & Address):

Fuel Type:

DELIVERY / LOAD INSTRUCTIONS start 099281
7:20 09932.7

Received By:

Robert BeBault
Signature

Robert BeBault
Print Name

11-3-17
Date

RMCI INC
GENERAL CONTRACTOR

IFTA / IRP / WEIGHT DISTANCE POWER UNIT TRIP HAUL TICKET

EQUIPMENT / MATERIAL HAUL TICKET

MUST FILL OUT MILES / HRS. OF EQUIPMENT BEING HAULED

PO BOX 91447
Albuquerque, NM 87199
(505) 345-0008
(505) 345-0111 Fax

DATE: 10-31-17

Dispatch Location: 1611
Pickup Location: 1611
Delivery Location: 1611
Return Location: 1611
Vehicle/Trailer Used: 4610

Shop/Maintenance Transport ☐
Vendor Transport ☐
Job Transport ☐

Time Start: 7:00
Breakfast/Lunch/Dinner: 1/2
Time End: 3:30
Total Time: 8
NM Start Mileage: 498526
NM End Mileage: 498532
Total NM Miles: 6
Out of State Start Mileage: —
Out of State Return Mileage: —
Total Out of State Miles: —

Trip Origin (Latitude/Longitude):
Trip Destination (Latitude/Longitude):

EQUIPMENT / MATERIAL HAULED		MUST FILL OUT MILES / HRS. OF EQUIPMENT BEING HAULED		
UNIT	MODEL / MATERIAL	MILES	HOURS	ACCESSORIES
4610	Interrupt water	6	8	2 loads

Route of Travel: Jobsite

Fuel Purchase (Name & Address):

Number of Gallons:

Price Per Gallon:
Total Amount of Sale:
Purchaser (Name & Address):

Fuel Type:

DELIVERY / LOAD INSTRUCTIONS	start 09902.7
7:15 Am	09907.4
10:25 Am	09911.9

Received By:

Signature

Robert BeBault
Print Name

10-31-17
Date

DRIVER'S VEHICLE INSPECTION REPORT

AS REQUIRED BY THE D.O.T. FEDERAL MOTOR CARRIER SAFETY REGULATIONS

CARRIER: RMCT

ADDRESS: 6211 chappell rd Alb N.M

DATE: 11-6-17 TIME: _____ A.M. _____ P.M.

CHECK ANY DEFECTIVE ITEM AND GIVE DETAILS UNDER "REMARKS"

TRACTOR/ TRUCK NO. 4610 ODOMETER READING 498542

- ☐ Air Compressor
- ☐ Air Lines
- ☐ Battery
- ☐ Belts and Hoses
- ☐ Body
- ☐ Brake Accessories
- ☐ Brakes, Parking
- ☐ Brakes, Service
- ☐ Clutch
- ☑ Coupling Devices
- ☐ Defroster/Heater
- ☐ Drive Line
- ☐ Engine
- ☐ Exhaust
- ☑ Fifth Wheel
- ☐ Fluid Levels
- ☐ Frame and Assembly
- ☐ Front Axle
- ☐ Fuel Tanks
- ☐ Horn
- ☐ Lights
  - Head/Stop
  - Tail/Dash
  - Turn Indicators
  - Clearance/Marker
- ☐ Mirrors
- ☐ Muffler
- ☐ Oil Pressure
- ☐ Radiator
- ☐ Rear End
- ☐ Reflectors
- ☐ Safety Equipment
  - Fire Extinguisher
  - Flags/Flares/Fusees
  - Reflective Triangles
  - Spare Bulbs and Fuses
  - Spare Seal Beam
- ☐ Starter
- ☐ Steering
- ☐ Suspension System
- ☑ Tire Chains
- ☐ Tires
- ☐ Transmission
- ☑ Trip Recorder
- ☐ Wheels and Rims
- ☐ Windows
- ☐ Windshield Wipers
- ☐ Other

TRAILER(S) NO.(S) —

- ☐ Brake Connections
- ☐ Brakes
- ☐ Coupling Devices
- ☐ Coupling (King) Pin
- ☐ Doors
- ☐ Hitch
- ☐ Landing Gear
- ☐ Lights - All
- ☐ Reflectors/Reflective Tape
- ☐ Roof
- ☐ Suspension System
- ☐ Tarpaulin
- ☐ Tires
- ☐ Wheels and Rims
- ☐ Other

Remarks: _____

☑ CONDITION OF THE ABOVE VEHICLE IS SATISFACTORY

DRIVER'S SIGNATURE: [signature]

☐ ABOVE DEFECTS CORRECTED

☐ ABOVE DEFECTS NEED NOT BE CORRECTED FOR SAFE OPERATION OF VEHICLE

MECHANIC'S SIGNATURE: _____ DATE: _____

DRIVER'S SIGNATURE: _____ DATE: _____

ORIGINAL

© Copyright 2012 J. J. KELLER & ASSOCIATES, INC.®, Neenah, WI
USA • (800) 327-6868 • Printed in the United States

DRIVER'S VEHICLE INSPECTION REPORT

AS REQUIRED BY THE D.O.T. FEDERAL MOTOR CARRIER SAFETY REGULATIONS

CARRIER: RMCI

ADDRESS: 6211 Chappell rd Alb N.M

DATE: 11-7-17 TIME: 6:30 A.M. _____ P.M.

CHECK ANY DEFECTIVE ITEM AND GIVE DETAILS UNDER "REMARKS"

TRACTOR/ TRUCK NO. 4610 ODOMETER READING 498548

- ☐ Air Compressor
- ☐ Air Lines
- ☐ Battery
- ☐ Belts and Hoses
- ☐ Body
- ☐ Brake Accessories
- ☐ Brakes, Parking
- ☐ Brakes, Service
- ☐ Clutch
- ☑ Coupling Devices
- ☐ Defroster/Heater
- ☐ Drive Line
- ☐ Engine
- ☐ Exhaust
- ☑ Fifth Wheel
- ☐ Fluid Levels
- ☐ Frame and Assembly
- ☐ Front Axle
- ☐ Fuel Tanks
- ☐ Horn
- ☐ Lights
  - Head/Stop
  - Tail/Dash
  - Turn Indicators
  - Clearance/Marker
- ☐ Mirrors
- ☐ Muffler
- ☐ Oil Pressure
- ☐ Radiator
- ☐ Rear End
- ☐ Reflectors
- ☐ Safety Equipment
  - Fire Extinguisher
  - Flags/Flares/Fusees
  - Reflective Triangles
  - Spare Bulbs and Fuses
  - Spare Seal Beam
- ☐ Starter
- ☐ Steering
- ☐ Suspension System
- ☑ Tire Chains
- ☐ Tires
- ☐ Transmission
- ☑ Trip Recorder
- ☐ Wheels and Rims
- ☐ Windows
- ☐ Windshield Wipers
- ☐ Other

TRAILER(S) NO.(S) ———

- ☐ Brake Connections
- ☐ Brakes
- ☐ Coupling Devices
- ☐ Coupling (King) Pin
- ☐ Doors
- ☐ Hitch
- ☐ Landing Gear
- ☐ Lights - All
- ☐ Reflectors/Reflective Tape
- ☐ Roof
- ☐ Suspension System
- ☐ Tarpaulin
- ☐ Tires
- ☐ Wheels and Rims
- ☐ Other

Remarks: _____

☑ CONDITION OF THE ABOVE VEHICLE IS ~~SATISFACTORY~~

DRIVER'S SIGNATURE: Robert Bernal

☐ ABOVE DEFECTS CORRECTED

☐ ABOVE DEFECTS NEED NOT BE CORRECTED FOR SAFE OPERATION OF VEHICLE

MECHANIC'S SIGNATURE: _____ DATE: _____

DRIVER'S SIGNATURE: _____ DATE: _____

ORIGINAL

© Copyright 2012 J. J. KELLER & ASSOCIATES, INC.®, Neenah, WI
USA • (800) 327-6868 • Printed in the United States

DRIVER'S VEHICLE INSPECTION REPORT

AS REQUIRED BY THE D.O.T. FEDERAL MOTOR CARRIER SAFETY REGULATIONS

CARRIER: RMCT

ADDRESS: 6211 Chappell rd Alb N.M

DATE: 11-8-17 TIME: _____ A.M. _____ P.M.

CHECK ANY DEFECTIVE ITEM AND GIVE DETAILS UNDER "REMARKS"

TRACTOR/ TRUCK NO. 4610 ODOMETER READING 498553

- ☐ Air Compressor
- ☐ Air Lines
- ☐ Battery
- ☐ Belts and Hoses
- ☐ Body
- ☐ Brake Accessories
- ☐ Brakes, Parking
- ☐ Brakes, Service
- ☐ Clutch
- ☑ Coupling Devices
- ☐ Defroster/Heater
- ☐ Drive Line
- ☐ Engine
- ☐ Exhaust
- ☑ Fifth Wheel
- ☐ Fluid Levels
- ☐ Frame and Assembly
- ☐ Front Axle
- ☐ Fuel Tanks
- ☐ Horn
- ☐ Lights
  - Head/Stop
  - Tail/Dash
  - Turn Indicators
  - Clearance/Marker
- ☐ Mirrors
- ☐ Muffler
- ☐ Oil Pressure
- ☐ Radiator
- ☐ Rear End
- ☐ Reflectors
- ☐ Safety Equipment
  - Fire Extinguisher
  - Flags/Flares/Fusees
  - Reflective Triangles
  - Spare Bulbs and Fuses
  - Spare Seal Beam
- ☐ Starter
- ☐ Steering
- ☐ Suspension System
- ☑ Tire Chains
- ☐ Tires
- ☐ Transmission
- ☑ Trip Recorder
- ☐ Wheels and Rims
- ☐ Windows
- ☐ Windshield Wipers
- ☐ Other

TRAILER(S) NO.(S) _____

- ☐ Brake Connections
- ☐ Brakes
- ☐ Coupling Devices
- ☐ Coupling (King) Pin
- ☐ Doors
- ☐ Hitch
- ☐ Landing Gear
- ☐ Lights - All
- ☐ Reflectors/Reflective Tape
- ☐ Roof
- ☐ Suspension System
- ☐ Tarpaulin
- ☐ Tires
- ☐ Wheels and Rims
- ☐ Other

Remarks: _____

☑ CONDITION OF THE ABOVE VEHICLE IS SATISFACTORY

DRIVER'S SIGNATURE: [signature]

☐ ABOVE DEFECTS CORRECTED

☐ ABOVE DEFECTS NEED NOT BE CORRECTED FOR SAFE OPERATION OF VEHICLE

MECHANIC'S SIGNATURE: _____ DATE: _____

DRIVER'S SIGNATURE: _____ DATE: _____

ORIGINAL

© Copyright 2012 J. J. KELLER & ASSOCIATES, INC.®, Neenah, WI
USA • (800) 327-6868 • Printed in the United States

DRIVER'S VEHICLE INSPECTION REPORT

AS REQUIRED BY THE D.O.T. FEDERAL MOTOR CARRIER SAFETY REGULATIONS

CARRIER: RMCI

ADDRESS: 6211 chappell rd Alban

DATE: 11-9-17 TIME: 6:30 A.M. _____ P.M.

CHECK ANY DEFECTIVE ITEM AND GIVE DETAILS UNDER "REMARKS"

TRACTOR/ TRUCK NO. 4610 ODOMETER READING 498558

- ☐ Air Compressor
- ☐ Air Lines
- ☐ Battery
- ☐ Belts and Hoses
- ☐ Body
- ☐ Brake Accessories
- ☐ Brakes, Parking
- ☐ Brakes, Service
- ☐ Clutch
- ☑ Coupling Devices
- ☐ Defroster/Heater
- ☐ Drive Line
- ☐ Engine
- ☐ Exhaust
- ☑ Fifth Wheel
- ☐ Fluid Levels
- ☐ Frame and Assembly
- ☐ Front Axle
- ☐ Fuel Tanks
- ☐ Horn
- ☐ Lights
  - Head/Stop
  - Tail/Dash
  - Turn Indicators
  - Clearance/Marker
- ☐ Mirrors
- ☐ Muffler
- ☐ Oil Pressure
- ☐ Radiator
- ☐ Rear End
- ☐ Reflectors
- ☐ Safety Equipment
  - Fire Extinguisher
  - Flags/Flares/Fusees
  - Reflective Triangles
  - Spare Bulbs and Fuses
  - Spare Seal Beam
- ☐ Starter
- ☐ Steering
- ☐ Suspension System
- ☑ Tire Chains
- ☐ Tires
- ☐ Transmission
- ☑ Trip Recorder
- ☐ Wheels and Rims
- ☐ Windows
- ☐ Windshield Wipers
- ☒ Other

TRAILER(S) NO.(S) _____

- ☐ Brake Connections
- ☐ Brakes
- ☐ Coupling Devices
- ☐ Coupling (King) Pin
- ☐ Doors
- ☐ Hitch
- ☐ Landing Gear
- ☐ Lights - All
- ☐ Reflectors/Reflective Tape
- ☐ Roof
- ☐ Suspension System
- ☐ Tarpaulin
- ☐ Tires
- ☐ Wheels and Rims
- ☐ Other

Remarks: Drain valve on PTO not working properly need to be Replaced

☑ CONDITION OF THE ABOVE VEHICLE IS SATISFACTORY

DRIVER'S SIGNATURE: Robert Bobst

☐ ABOVE DEFECTS CORRECTED

☐ ABOVE DEFECTS NEED NOT BE CORRECTED FOR SAFE OPERATION OF VEHICLE

MECHANIC'S SIGNATURE: _____ DATE: _____

DRIVER'S SIGNATURE: _____ DATE: _____

ORIGINAL

© Copyright 2012 J. J. KELLER & ASSOCIATES, INC.®, Neenah, WI
USA • (800) 327-6868 • Printed in the United States

RMCI INC
GENERAL CONTRACTOR
N.M. LICENSE No. 31964

EQUIPMENT CHECK LIST
LISTA DE REVISION DE MAQUINARIA

MODEL *(modelo)* ~~JD~~ Volvo	WEEK ENDING *(fin de semana* ~~9-24-17~~ 11-10-17
ID NO. *(numero de la maquina)* ~~#~~ 2310	OPERATOR *(operador)* Jesus Moya
JOB NO. *(numero de trabajo)* 1611	HOURS / MILEAGE *(horas o millaje)* [redacted] 12376

The Following Items To Be Checked Or Lubricated Daily As They Apply
(revisar o lubricar esta lista a diario)

CHECK *(revisar)*	MON *(lun)*	TUES *(mar)*	WED *(mier)*	THURS *(juev)*	FRI *(Vier)*
ENGINE OIL *(lubricasion del motor)*	✓	✓	✓	✓	
AIR CLEANER *(filtro de aire)*	✓	✓	✓	✓	
TRANSMISSION *(trasmisión)*	✓	✓	✓	✓	
RADIATOR *(radiador)*	✓	✓	✓	✓	
FUEL TANK *(tanque de disel o gasolina)*	✓	✓	✓	✓	
AIR TANK *(tanque de aire)*					
TIRES *(presion de llantas)*	✓	✓	✓	✓	
PARKING BRAKE/BRAKES *(freno de mano/frenos)*	✓	✓	✓	✓	
HORN/BACK-UP-ALARM *(pito/alarma de reversa)*	✓	✓	✓	✓	
GAUGES/OR INDICATORS (indicadores de sistemas)	✓	✓	✓	✓	
CAB AND WINDOWS CLEAN (*cabina y vidrios limpios*)	✓	✓	✓	✓	

LUBRICATE *(lubricasion)*	MON *(lun)*	TUES *(mar)*	WED *(mier)*	THURS *(juev)*	FRI *(Vier)*
STEERING OR SWIVEL PINS *(pernos de dirección)*					
BUCKET PINS *(pernos de cubeta)*	✓	✓	✓	✓	

REMARKS/PROBLEMS *(reporte de problemas)*: Mounting Bracket for Fire Ext. needs Reinstalled,

Operator (operador)	Date (fecha)	Superintendent *(superintendente)*	Date (fecha)
Jmoya	11-11-17	Ed Hyde	11-13-17

RMCI INC
GENERAL CONTRACTOR
N.M. LICENSE No. 31964

EXCAVATOR CHECK LIST
LISTA DE REVISION DE ESCAVADORA

MODEL *(modelo)*	WEEK ENDING *(fin de semana)*
PC - 200	11-10-17
ID NO. *(numero de la maquina)*	OPERATOR *(operador)* Jesus Moya
JOB NO. *(numero de trabajo)* **1611**	HOURS / MILEAGE *(horas o millaje)* 2162

The Following Items To Be Checked Or Lubricated Daily As They Apply
(revisar o lubricar esta lista a diario)

CHECK *(revisar)*	MON *(lun)*	TUES *(mar)*	WED *(mier)*	THURS *(juev)*	FRI *(Vier)*
ENGINE OIL *(lubricasión del motor)*	✓	✓	✓	✓	
AIR CLEANER *(filtro de aire)*	✓	✓	✓	✓	
SWIVEL GEAR CASE *(caja de mesa rotadora)*	✓	✓	✓	✓	
RADIATOR *(radiador)*	✓	✓	✓	✓	
FUEL TANK *(tanque de disel o gasolina)*	✓	✓	✓	✓	
HYDRAULIC FLUID LEVEL *(nivel de aciete hidraulico)*	✓	✓	✓	✓	
TRACKS-CLEAN-TENSION *(traques – limpios y ajustasión propia)*	✓	✓	✓	✓	
SWINGBREAK *(freno de mesa de rotación)*	✓	✓	✓	✓	
HORN/BACK-UP-ALARM *(pito/alarma de reversa)*	✓	✓	✓	✓	
GAUGES OR INDICATORS *(indicadores de sistemas)*	✓	✓	✓	✓	
QUICK COUPLER *(acoplador rapido de cubeta)*	✓	✓	✓	✓	
CAB AND WINDOWS CLEAN *(cabina y vidrios limpios)*	✓	✓	✓	✓	

LUBRICATE *(lubricasion)*	MON *(lun)*	TUES *(mar)*	WED *(mier)*	THURS *(juev)*	FRI *(Vier)*
HOUSE TABLE *(mesa de rotación)*	✓	✓	✓		
WORKING PINS *(pernos del braso)*	✓	✓	✓		
BUCKET PINS *(pernos de cubeta)*	✓	✓			

REMARKS/PROBLEMS *(reporte de problemas)*: _____

Operator *(operador)*	Date *(fecha)*	Superintendent *(superintendente)*	Date *(fecha)*
Jmoya	11-11-17		

RMCI INC
GENERAL CONTRACTOR
N.M. LICENSE No. 31964

EQUIPMENT CHECK LIST
LISTA DE REVISION DE MAQUINARIA

MODEL *(modelo)* JD BackHoe	WEEK ENDING *(fin de semana* ~~9-2-17~~ 11-10-17
ID NO. *(numero de la maquina)* # 1415	OPERATOR *(operador)* Jesus Moya
JOB NO. *(numero de trabajo)* 1611	HOURS / MILEAGE *(horas o millaje)* 5030.5

The Following Items To Be Checked Or Lubricated Daily As They Apply
(revisar o lubricar esta lista a diario)

CHECK *(revisar)*	MON *(lun)*	TUES *(mar)*	WED *(mier)*	THURS *(juev)*	FRI *(Vier)*
ENGINE OIL *(lubricasion del motor)*	✓	✓	✓	✓	
AIR CLEANER *(filtro de aire)*	✓	✓	✓	✓	
TRANSMISSION *(trasmisión)*	✓	✓	✓	✓	
RADIATOR *(radiador)*	✓	✓	✓	✓	
FUEL TANK *(tanque de disel o gasolina)*	✓	✓	✓	✓	
AIR TANK *(tanque de aire)*					
TIRES *(presion de llantas)*	✓	✓	✓	✓	
PARKING BRAKE/BRAKES *(freno de mano/frenos)*	✓	✓	✓	✓	
HORN/BACK-UP-ALARM *(pito/alarma de reversa)*	✓	✓	✓	✓	
GAUGES/OR INDICATORS (indicadores de sistemas)	✓	✓	✓	✓	
CAB AND WINDOWS CLEAN (*cabina y vidrios limpios*)	✓	✓	✓	✓	

LUBRICATE *(lubricasion)*	MON *(lun)*	TUES *(mar)*	WED *(mier)*	THURS *(juev)*	FRI *(Vier)*
STEERING OR SWIVEL PINS *(pernos de dirección)*					
BUCKET PINS *(pernos de cubeta)*	✓	✓	✓	✓	

REMARKS/PROBLEMS *(reporte de problemas)*:

Operator (operador)	Date (fecha)	Superintendent *(superintendente)*	Date (fecha)
Jmoya	11-11-17	Ed Hyde	

RMCI INC
GENERAL CONTRACTOR

IFTA / IRP / WEIGHT DISTANCE POWER UNIT TRIP HAUL TICKET

EQUIPMENT / MATERIAL HAUL TICKET

MUST FILL OUT MILES / HRS. OF EQUIPMENT BEING HAULED

PO BOX 91447
Albuquerque, NM 87199
(505) 345-0008
(505) 345-0111 Fax

DATE: 11-6-17

Dispatch Location: 1611
Pickup Location: 1611
Delivery Location: 1611
Return Location: 1611
Vehicle/Trailer Used: 4610

Shop/Maintenance Transport ☐
Vendor Transport ☐
Job Transport ☐

Time Start: 7:00
Breakfast/Lunch/Dinner: 1/2
Time End: 330
Total Time: 8
NM Start Mileage: 498542
NM End Mileage: 498548
Total NM Miles: 6
Out of State Start Mileage: —
Out of State Return Mileage: —
Total Out of State Miles: —

Trip Origin (Latitude/Longitude):
Trip Destination (Latitude/Longitude):

EQUIPMENT / MATERIAL HAULED		MUST FILL OUT MILES / HRS. OF EQUIPMENT BEING HAULED		
UNIT	MODEL / MATERIAL	MILES	HOURS	ACCESSORIES
4610	Internat water	6	8	3 loads

Route of Travel: Jobsite

Fuel Purchase (Name & Address):

Number of Gallons:

Price Per Gallon:
Total Amount of Sale:
Purchaser (Name & Address):

Fuel Type:

DELIVERY / LOAD INSTRUCTIONS	Start 09932.7
7:20 AM	09937.4
9:30 AM	09941.3
11:30 AM	09945.6

Received By:

Signature

Robert Belbach
Print Name

11-6-17
Date

RMCI INC
GENERAL CONTRACTOR

IFTA / IRP / WEIGHT DISTANCE POWER UNIT TRIP HAUL TICKET

EQUIPMENT / MATERIAL HAUL TICKET

MUST FILL OUT MILES / HRS. OF EQUIPMENT BEING HAULED

PO BOX 91447
Albuquerque, NM 87199
(505) 345-0008
(505) 345-0111 Fax

DATE: 11-7-17

Dispatch Location: 1611
Pickup Location: 1611
Delivery Location: 1611
Return Location: 1611
Vehicle/Trailer Used: 4610

Shop/Maintenance Transport ☐
Vendor Transport ☐
Job Transport ☐

Time Start: 6:30
Breakfast/Lunch/Dinner: ½
Time End: 3:00
Total Time: 8
NM Start Mileage: 498548
NM End Mileage: 498553
Total NM Miles: 5
Out of State Start Mileage: —
Out of State Return Mileage: —
Total Out of State Miles: —

Trip Origin (Latitude/Longitude):
Trip Destination (Latitude/Longitude):

EQUIPMENT / MATERIAL HAULED		MUST FILL OUT MILES / HRS. OF EQUIPMENT BEING HAULED		
UNIT	MODEL / MATERIAL	MILES	HOURS	ACCESSORIES
4610	Interrad water	5	8	2 loads

Route of Travel: Jobsite

Fuel Purchase (Name & Address):

Number of Gallons:

Price Per Gallon:
Total Amount of Sale:
Purchaser (Name & Address):

Fuel Type:

DELIVERY / LOAD INSTRUCTIONS

7:50 AM 09950.2
11:60 AM 08953.1

Received By:

Signature

Robert Brown
Print Name

11-7-17
Date

RMCI INC
GENERAL CONTRACTOR

IFTA / IRP / WEIGHT DISTANCE POWER UNIT TRIP HAUL TICKET

EQUIPMENT / MATERIAL HAUL TICKET

MUST FILL OUT MILES / HRS. OF EQUIPMENT BEING HAULED

PO BOX 91447
Albuquerque, NM 87199
(505) 345-0008
(505) 345-0111 Fax

DATE: 11-8-17

Dispatch Location: 1611
Pickup Location: 1611
Delivery Location: 1611
Return Location: 1611
Vehicle/Trailer Used: 4610

Shop/Maintenance Transport ☐
Vendor Transport ☐
Job Transport ☐

Time Start: 6:30
Breakfast/Lunch/Dinner: N/C
Time End: 3:00
Total Time: 8
NM Start Mileage: 498553
NM End Mileage: 498558
Total NM Miles: 5
Out of State Start Mileage: —
Out of State Return Mileage: —
Total Out of State Miles: —

Trip Origin (Latitude/Longitude): _____
Trip Destination (Latitude/Longitude): _____

EQUIPMENT / MATERIAL HAULED		MUST FILL OUT MILES / HRS. OF EQUIPMENT BEING HAULED		
UNIT	MODEL / MATERIAL	MILES	HOURS	ACCESSORIES
4610	Internat water	5	8	2 loads

Route of Travel: Jobsite

Fuel Purchase (Name & Address): _____

Number of Gallons: _____

Price Per Gallon: _____
Total Amount of Sale: _____
Purchaser (Name & Address): _____

Fuel Type: _____

DELIVERY / LOAD INSTRUCTIONS

	Start 09953.1
7:00 AM	09957.7
1:00 pm	09962.0

Received By:

Signature: Robert Bellault

Print Name: Robert Bellault

Date: 11-8-17

RMCI INC
GENERAL CONTRACTOR

IFTA / IRP / WEIGHT DISTANCE POWER UNIT TRIP HAUL TICKET

EQUIPMENT / MATERIAL HAUL TICKET

MUST FILL OUT MILES / HRS. OF EQUIPMENT BEING HAULED

PO BOX 91447
Albuquerque, NM 87199
(505) 345-0008
(505) 345-0111 Fax

DATE: 11-9-17

Dispatch Location: 1611
Pickup Location: 1611
Delivery Location: 1611
Return Location: 1611
Vehicle/Trailer Used: 4610

Shop/Maintenance Transport ☐
Vendor Transport ☐
Job Transport ☐

Time Start: 6:30
Breakfast/Lunch/Dinner: ½
Time End: 2:30
Total Time: 7.5
NM Start Mileage: 498558
NM End Mileage: 498562
Total NM Miles: 5
Out of State Start Mileage: —
Out of State Return Mileage: —
Total Out of State Miles: —

Trip Origin (Latitude/Longitude): _____
Trip Destination (Latitude/Longitude): _____

EQUIPMENT / MATERIAL HAULED		MUST FILL OUT MILES / HRS. OF EQUIPMENT BEING HAULED		
UNIT	MODEL / MATERIAL	MILES	HOURS	ACCESSORIES
4610	Interrat water	5	2.5	2 loads

Route of Travel: Jobsite

Fuel Purchase (Name & Address): _____

Number of Gallons: _____

Price Per Gallon: _____
Total Amount of Sale: _____
Purchaser (Name & Address): _____

Fuel Type: _____

DELIVERY / LOAD INSTRUCTIONS

	start 09962.0
7:00 Am	09966.7
9:25 Am	09970.1

Received By:

Signature: _____ Print Name: Robert Bobalt Date: 11-9-17

DRIVER'S VEHICLE INSPECTION REPORT

AS REQUIRED BY THE D.O.T. FEDERAL MOTOR CARRIER SAFETY REGULATIONS

CARRIER: RMCI

ADDRESS: 6211 chappell rd Alb N.M

DATE: 11-13-17 TIME: 6:30 A.M. _____ P.M.

CHECK ANY DEFECTIVE ITEM AND GIVE DETAILS UNDER "REMARKS"

TRACTOR/ TRUCK NO. 4610 ODOMETER READING 498562

- ☐ Air Compressor
- ☐ Air Lines
- ☐ Battery
- ☐ Belts and Hoses
- ☐ Body
- ☐ Brake Accessories
- ☐ Brakes, Parking
- ☐ Brakes, Service
- ☐ Clutch
- ☑ Coupling Devices
- ☐ Defroster/Heater
- ☐ Drive Line
- ☐ Engine
- ☐ Exhaust
- ☑ Fifth Wheel
- ☐ Fluid Levels
- ☐ Frame and Assembly
- ☐ Front Axle
- ☐ Fuel Tanks
- ☐ Horn
- ☐ Lights
  - Head/Stop
  - Tail/Dash
  - Turn Indicators
  - Clearance/Marker
- ☐ Mirrors
- ☐ Muffler
- ☐ Oil Pressure
- ☐ Radiator
- ☐ Rear End
- ☐ Reflectors
- ☐ Safety Equipment
  - Fire Extinguisher
  - Flags/Flares/Fusees
  - Reflective Triangles
  - Spare Bulbs and Fuses
  - Spare Seal Beam
- ☐ Starter
- ☐ Steering
- ☐ Suspension System
- ☑ Tire Chains
- ☐ Tires
- ☐ Transmission
- ☑ Trip Recorder
- ☐ Wheels and Rims
- ☐ Windows
- ☐ Windshield Wipers
- ☑ Other

TRAILER(S) NO.(S) _____

- ☐ Brake Connections
- ☐ Brakes
- ☐ Coupling Devices
- ☐ Coupling (King) Pin
- ☐ Doors
- ☐ Hitch
- ☐ Landing Gear
- ☐ Lights - All
- ☐ Reflectors/Reflective Tape
- ☐ Roof
- ☐ Suspension System
- ☐ Tarpaulin
- ☐ Tires
- ☐ Wheels and Rims
- ☐ Other

Remarks: Drain valve on PTO unit not working need to be replaced

☑ CONDITION OF THE ABOVE VEHICLE IS SATISFACTORY

DRIVER'S SIGNATURE: Robert DeBault

☐ ABOVE DEFECTS CORRECTED

☐ ABOVE DEFECTS NEED NOT BE CORRECTED FOR SAFE OPERATION OF VEHICLE

MECHANIC'S SIGNATURE: _____ DATE: _____

DRIVER'S SIGNATURE: _____ DATE: _____

ORIGINAL

© Copyright 2012 J. J. KELLER & ASSOCIATES, INC.®, Neenah, WI
USA • (800) 327-6868 • Printed in the United States

DRIVER'S VEHICLE INSPECTION REPORT

AS REQUIRED BY THE D.O.T. FEDERAL MOTOR CARRIER SAFETY REGULATIONS

CARRIER: RMCI

ADDRESS: 6211 chappell rd Alb nm

DATE: 11-14-17 TIME: 6:30 A.M. _____ P.M.

CHECK ANY DEFECTIVE ITEM AND GIVE DETAILS UNDER "REMARKS"

TRACTOR/ TRUCK NO. 4610 ODOMETER READING 498567

- ☐ Air Compressor
- ☐ Air Lines
- ☐ Battery
- ☐ Belts and Hoses
- ☐ Body
- ☐ Brake Accessories
- ☐ Brakes, Parking
- ☐ Brakes, Service
- ☐ Clutch
- ☑ Coupling Devices
- ☐ Defroster/Heater
- ☐ Drive Line
- ☐ Engine
- ☐ Exhaust
- ☑ Fifth Wheel
- ☐ Fluid Levels
- ☐ Frame and Assembly
- ☐ Front Axle
- ☐ Fuel Tanks
- ☐ Horn
- ☐ Lights
  - Head/Stop
  - Tail/Dash
  - Turn Indicators
  - Clearance/Marker
- ☐ Mirrors
- ☐ Muffler
- ☐ Oil Pressure
- ☐ Radiator
- ☐ Rear End
- ☐ Reflectors
- ☐ Safety Equipment
  - Fire Extinguisher
  - Flags/Flares/Fusees
  - Reflective Triangles
  - Spare Bulbs and Fuses
  - Spare Seal Beam
- ☐ Starter
- ☐ Steering
- ☐ Suspension System
- ☑ Tire Chains
- ☐ Tires
- ☐ Transmission
- ☑ Trip Recorder
- ☐ Wheels and Rims
- ☐ Windows
- ☐ Windshield Wipers
- ☑ Other

TRAILER(S) NO.(S) ———

- ☐ Brake Connections
- ☐ Brakes
- ☐ Coupling Devices
- ☐ Coupling (King) Pin
- ☐ Doors
- ☐ Hitch
- ☐ Landing Gear
- ☐ Lights - All
- ☐ Reflectors/Reflective Tape
- ☐ Roof
- ☐ Suspension System
- ☐ Tarpaulin
- ☐ Tires
- ☐ Wheels and Rims
- ☐ Other

Remarks: Drain valve on pto broken

☑ CONDITION OF THE ABOVE VEHICLE IS SATISFACTORY

DRIVER'S SIGNATURE: [signature]

☐ ABOVE DEFECTS CORRECTED

☐ ABOVE DEFECTS NEED NOT BE CORRECTED FOR SAFE OPERATION OF VEHICLE

MECHANIC'S SIGNATURE: _____ DATE: _____

DRIVER'S SIGNATURE: _____ DATE: _____

ORIGINAL

© Copyright 2012 J. J. KELLER & ASSOCIATES, INC.®, Neenah, WI
USA • (800) 327-6868 • Printed in the United States

1862

DRIVER'S VEHICLE INSPECTION REPORT

AS REQUIRED BY THE D.O.T. FEDERAL MOTOR CARRIER SAFETY REGULATIONS

CARRIER: RMCI

ADDRESS: 6211 chappell rd Alb N.M

DATE: 11-15-17 TIME: 6:30 A.M. _____ P.M.

CHECK ANY DEFECTIVE ITEM AND GIVE DETAILS UNDER "REMARKS"

TRACTOR/ TRUCK NO. 4610 ODOMETER READING 498572

- ☐ Air Compressor
- ☐ Air Lines
- ☐ Battery
- ☐ Belts and Hoses
- ☐ Body
- ☐ Brake Accessories
- ☐ Brakes, Parking
- ☐ Brakes, Service
- ☐ Clutch
- ☑ Coupling Devices
- ☐ Defroster/Heater
- ☐ Drive Line
- ☐ Engine
- ☐ Exhaust
- ☑ Fifth Wheel
- ☐ Fluid Levels
- ☐ Frame and Assembly
- ☐ Front Axle
- ☐ Fuel Tanks
- ☐ Horn
- ☐ Lights
  - Head/Stop
  - Tail/Dash
  - Turn Indicators
  - Clearance/Marker
- ☐ Mirrors
- ☐ Muffler
- ☐ Oil Pressure
- ☐ Radiator
- ☐ Rear End
- ☐ Reflectors
- ☐ Safety Equipment
  - Fire Extinguisher
  - Flags/Flares/Fusees
  - Reflective Triangles
  - Spare Bulbs and Fuses
  - Spare Seal Beam
- ☐ Starter
- ☐ Steering
- ☐ Suspension System
- ☑ Tire Chains
- ☐ Tires
- ☐ Transmission
- ☑ Trip Recorder
- ☐ Wheels and Rims
- ☐ Windows
- ☐ Windshield Wipers
- ☑ Other

TRAILER(S) NO.(S) _____

- ☐ Brake Connections
- ☐ Brakes
- ☐ Coupling Devices
- ☐ Coupling (King) Pin
- ☐ Doors
- ☐ Hitch
- ☐ Landing Gear
- ☐ Lights - All
- ☐ Reflectors/Reflective Tape
- ☐ Roof
- ☐ Suspension System
- ☐ Tarpaulin
- ☐ Tires
- ☐ Wheels and Rims
- ☐ Other

Remarks: Drain valve not operational

☑ CONDITION OF THE ABOVE VEHICLE IS SATISFACTORY

DRIVER'S SIGNATURE: [signature]

☐ ABOVE DEFECTS CORRECTED

☐ ABOVE DEFECTS NEED NOT BE CORRECTED FOR SAFE OPERATION OF VEHICLE

MECHANIC'S SIGNATURE: _____ DATE: _____

DRIVER'S SIGNATURE: _____ DATE: _____

ORIGINAL

© Copyright 2012 J. J. KELLER & ASSOCIATES, INC.®, Neenah, WI
USA • (800) 327-6868 • Printed in the United States

1862

DRIVER'S VEHICLE INSPECTION REPORT

AS REQUIRED BY THE D.O.T. FEDERAL MOTOR CARRIER SAFETY REGULATIONS

CARRIER: RMCT

ADDRESS: 6211 chappell rd Alb nm

DATE: 11-16-17 TIME: 6:30 A.M. _____ P.M.

CHECK ANY DEFECTIVE ITEM AND GIVE DETAILS UNDER "REMARKS"

TRACTOR/ TRUCK NO. 4610 ODOMETER READING 498582

- ☐ Air Compressor
- ☐ Air Lines
- ☐ Battery
- ☐ Belts and Hoses
- ☐ Body
- ☐ Brake Accessories
- ☐ Brakes, Parking
- ☐ Brakes, Service
- ☐ Clutch
- ☑ Coupling Devices
- ☐ Defroster/Heater
- ☐ Drive Line
- ☐ Engine
- ☐ Exhaust
- ☑ Fifth Wheel
- ☐ Fluid Levels
- ☐ Frame and Assembly
- ☐ Front Axle
- ☐ Fuel Tanks
- ☐ Horn
- ☐ Lights
  - Head/Stop
  - Tail/Dash
  - Turn Indicators
  - Clearance/Marker
- ☐ Mirrors
- ☐ Muffler
- ☐ Oil Pressure
- ☐ Radiator
- ☐ Rear End
- ☐ Reflectors
- ☐ Safety Equipment
  - Fire Extinguisher
  - Flags/Flares/Fusees
  - Reflective Triangles
  - Spare Bulbs and Fuses
  - Spare Seal Beam
- ☐ Starter
- ☐ Steering
- ☐ Suspension System
- ☑ Tire Chains
- ☐ Tires
- ☐ Transmission
- ☑ Trip Recorder
- ☐ Wheels and Rims
- ☐ Windows
- ☐ Windshield Wipers
- ☑ Other

TRAILER(S) NO.(S) _____

- ☐ Brake Connections
- ☐ Brakes
- ☐ Coupling Devices
- ☐ Coupling (King) Pin
- ☐ Doors
- ☐ Hitch
- ☐ Landing Gear
- ☐ Lights - All
- ☐ Reflectors/Reflective Tape
- ☐ Roof
- ☐ Suspension System
- ☐ Tarpaulin
- ☐ Tires
- ☐ Wheels and Rims
- ☐ Other

Remarks: Drain valve on PTO broken

☐ CONDITION OF THE ABOVE VEHICLE IS SATISFACTORY

DRIVER'S SIGNATURE: _____

☐ ABOVE DEFECTS CORRECTED

☐ ABOVE DEFECTS NEED NOT BE CORRECTED FOR SAFE OPERATION OF VEHICLE

MECHANIC'S SIGNATURE: _____ DATE: _____

DRIVER'S SIGNATURE: _____ DATE: _____

ORIGINAL

© Copyright 2012 J. J. KELLER & ASSOCIATES, INC.®, Neenah, WI
USA • (800) 327-6868 • Printed in the United States

DRIVER'S VEHICLE INSPECTION REPORT

AS REQUIRED BY THE D.O.T. FEDERAL MOTOR CARRIER SAFETY REGULATIONS

CARRIER: RMCT

ADDRESS: 6211 chappell rd Alb NM

DATE: 11-17-17 TIME: 6:30 A.M. _____ P.M.

CHECK ANY DEFECTIVE ITEM AND GIVE DETAILS UNDER "REMARKS"

TRACTOR/ TRUCK NO. 4610 ODOMETER READING 498588

- ☐ Air Compressor
- ☐ Air Lines
- ☐ Battery
- ☐ Belts and Hoses
- ☐ Body
- ☐ Brake Accessories
- ☐ Brakes, Parking
- ☐ Brakes, Service
- ☐ Clutch
- ☑ Coupling Devices
- ☐ Defroster/Heater
- ☐ Drive Line
- ☐ Engine
- ☐ Exhaust
- ☑ Fifth Wheel
- ☐ Fluid Levels
- ☐ Frame and Assembly
- ☐ Front Axle
- ☐ Fuel Tanks
- ☐ Horn
- ☐ Lights
  - Head/Stop
  - Tail/Dash
  - Turn Indicators
  - Clearance/Marker
- ☐ Mirrors
- ☐ Muffler
- ☐ Oil Pressure
- ☐ Radiator
- ☐ Rear End
- ☐ Reflectors
- ☐ Safety Equipment
  - Fire Extinguisher
  - Flags/Flares/Fusees
  - Reflective Triangles
  - Spare Bulbs and Fuses
  - Spare Seal Beam
- ☐ Starter
- ☐ Steering
- ☐ Suspension System
- ☑ Tire Chains
- ☐ Tires
- ☐ Transmission
- ☑ Trip Recorder
- ☐ Wheels and Rims
- ☐ Windows
- ☐ Windshield Wipers
- ☑ Other

TRAILER(S) NO.(S) —

- ☐ Brake Connections
- ☐ Brakes
- ☐ Coupling Devices
- ☐ Coupling (King) Pin
- ☐ Doors
- ☐ Hitch
- ☐ Landing Gear
- ☐ Lights - All
- ☐ Reflectors/Reflective Tape
- ☐ Roof
- ☐ Suspension System
- ☐ Tarpaulin
- ☐ Tires
- ☐ Wheels and Rims
- ☐ Other

Remarks: Drain Valve on GTO needs to be replaced

☑ CONDITION OF THE ABOVE VEHICLE IS SATISFACTORY

DRIVER'S SIGNATURE: [signature]

☐ ABOVE DEFECTS CORRECTED

☐ ABOVE DEFECTS NEED NOT BE CORRECTED FOR SAFE OPERATION OF VEHICLE

MECHANIC'S SIGNATURE: _____ DATE: _____

DRIVER'S SIGNATURE: _____ DATE: _____

ORIGINAL

© Copyright 2012 J. J. KELLER & ASSOCIATES, INC ®, Neenah, WI USA • (800) 327-6868 • Printed in the United States

RMCI INC
GENERAL CONTRACTOR
N.M. LICENSE No. 31964

EQUIPMENT CHECK LIST
LISTA DE REVISION DE MAQUINARIA

MODEL *(modelo)* ~~JD BackHoe~~ Volvo	WEEK ENDING *(fin de semana* ~~9-24-17~~ 11-18-17
ID NO. *(numero de la maquina)* # 1415	OPERATOR *(operador)* Jesus Moya
JOB NO. *(numero de trabajo)* 1611	HOURS / MILEAGE *(horas o millaje)* 1239

The Following Items To Be Checked Or Lubricated Daily As They Apply
(revisar o lubricar esta lista a diario)

CHECK *(revisar)*	MON *(lun)*	TUES *(mar)*	WED *(mier)*	THURS *(juev)*	FRI *(Vier)*
ENGINE OIL *(lubricasion del motor)*	✓	✓	✓	✓	✓
AIR CLEANER *(filtro de aire)*	✓	✓	✓	✓	✓
TRANSMISSION *(trasmisión)*	✓	✓	✓	✓	✓
RADIATOR *(radiador)*	✓	✓	✓	✓	✓
FUEL TANK *(tanque de disel o gasolina)*	✓	✓	✓	✓	✓
AIR TANK *(tanque de aire)*					
TIRES *(presion de llantas)*	✓	✓	✓	✓	✓
PARKING BRAKE/BRAKES *(freno de mano/frenos)*	✓	✓	✓	✓	✓
HORN/BACK-UP-ALARM *(pito/alarma de reversa)*	✓	✓	✓	✓	✓
GAUGES/OR INDICATORS (indicadores de sistemas)	✓	✓	✓	✓	✓
CAB AND WINDOWS CLEAN (*cabina y vidrios limpios*)	✓	✓	✓	✓	✓

LUBRICATE *(lubricasion)*	MON *(lun)*	TUES *(mar)*	WED *(mier)*	THURS *(juev)*	FRI *(Vier)*
STEERING OR SWIVEL PINS *(pernos de dirección)*					
BUCKET PINS *(pernos de cubeta)*	✓	✓	✓	✓	✓

REMARKS/PROBLEMS *(reporte de problemas)*:

Operator (operador)	Date (fecha)	Superintendent *(superintendente)*	Date (fecha)
Jesus Moya	11.17.17	Ed Hyde	

RMCI INC
GENERAL CONTRACTOR
N.M. LICENSE No. 31984

EQUIPMENT CHECK LIST
LISTA DE REVISION DE MAQUINARIA

MODEL *(modelo)* JD BackHoe	WEEK ENDING *(fin de semana* ~~9-27-17~~ 11-18-17
ID NO. *(numero de la maquina)* # 1415	OPERATOR *(operador)* JESUS Mora
JOB NO. *(numero de trabajo)* 1611	HOURS / MILEAGE *(horas o millaje)* 5052

The Following Items To Be Checked Or Lubricated Daily As They Apply
(revisar o lubricar esta lista a diario)

CHECK *(revisar)*	MON *(lun)*	TUES *(mar)*	WED *(mier)*	THURS *(juev)*	FRI *(Vier)*
ENGINE OIL *(lubricasion del motor)*	✓	✓	✓	✓	✓
AIR CLEANER *(filtro de aire)*	✓	✓	✓	✓	✓
TRANSMISSION *(trasmisión)*	✓	✓	✓	✓	✓
RADIATOR *(radiador)*	✓	✓	✓	✓	✓
FUEL TANK *(tanque de disel o gasolina)*	✓	✓	✓	✓	✓
AIR TANK *(tanque de aire)*					
TIRES *(presion de llantas)*	✓	✓	✓	✓	✓
PARKING BRAKE/BRAKES *(freno de mano/frenos)*	✓	✓	✓	✓	✓
HORN/BACK-UP-ALARM *(pito/alarma de reversa)*	✓	✓	✓	✓	✓
GAUGES/OR INDICATORS (indicadores de sistemas)	✓	✓	✓	✓	✓
CAB AND WINDOWS CLEAN (*cabina y vidrios limpios*)	✓	✓	✓	✓	✓

LUBRICATE *(lubricasion)*	MON *(lun)*	TUES *(mar)*	WED *(mier)*	THURS *(juev)*	FRI *(Vier)*
STEERING OR SWIVEL PINS *(pernos de dirección)*	✓	✓			
BUCKET PINS *(pernos de cubeta)*	✓	✓	✓	✓	✓

REMARKS/PROBLEMS *(reporte de problemas)*:

Operator (operador)	Date (fecha)	Superintendent *(superintendente)*	Date (fecha)
Jesus Mora	11-17-17	Ed Hyde	

RMCI INC
GENERAL CONTRACTOR

IFTA / IRP / WEIGHT DISTANCE POWER UNIT TRIP HAUL TICKET

EQUIPMENT / MATERIAL HAUL TICKET

MUST FILL OUT MILES / HRS. OF EQUIPMENT BEING HAULED

PO BOX 91447
Albuquerque, NM 87199
(505) 345-0008
(505) 345-0111 Fax

DATE: 11-13-17

Dispatch Location: 1611
Pickup Location: 1611
Delivery Location: 1611
Return Location: 1611
Vehicle/Trailer Used: 4610

Shop/Maintenance Transport ☐
Vendor Transport ☐
Job Transport ☐

Time Start: 6:30
Breakfast/Lunch/Dinner: 1/2
Time End: 3:00
Total Time: 8
NM Start Mileage: 498562
NM End Mileage: 498567
Total NM Miles: 5
Out of State Start Mileage: —
Out of State Return Mileage: —
Total Out of State Miles: —

Trip Origin (Latitude/Longitude):
Trip Destination (Latitude/Longitude):

EQUIPMENT / MATERIAL HAULED		MUST FILL OUT MILES / HRS. OF EQUIPMENT BEING HAULED		
UNIT	MODEL / MATERIAL	MILES	HOURS	ACCESSORIES
4610	Internat water	5	8	2 loads

Route of Travel: Jobsite

Fuel Purchase (Name & Address):

Number of Gallons:

Price Per Gallon:
Total Amount of Sale:
Purchaser (Name & Address):

Fuel Type:

DELIVERY / LOAD INSTRUCTIONS	Start 09970.1
7:03 Am	09974.7
11:25 Am	09977.5

Received By:

Signature: Robert BeBault

Print Name: Robert BeBault

Date: 11-13-17

RMCI INC
GENERAL CONTRACTOR

IFTA / IRP / WEIGHT DISTANCE POWER UNIT TRIP HAUL TICKET

EQUIPMENT / MATERIAL HAUL TICKET

MUST FILL OUT MILES / HRS. OF EQUIPMENT BEING HAULED

PO BOX 91447
Albuquerque, NM 87199
(505) 345-0008
(505) 345-0111 Fax

DATE: 11-14-17

Dispatch Location: 1611
Pickup Location: 1611
Delivery Location: 1611
Return Location: 1611
Vehicle/Trailer Used: 4610

Shop/Maintenance Transport ☐
Vendor Transport ☐
Job Transport ☐

Time Start: 6:30
Breakfast/Lunch/Dinner: 1/2
Time End: 3:30
Total Time: 8.5
NM Start Mileage: 498567
NM End Mileage: 498572
Total NM Miles: 5
Out of State Start Mileage: —
Out of State Return Mileage: —
Total Out of State Miles: —

Trip Origin (Latitude/Longitude):
Trip Destination (Latitude/Longitude):

EQUIPMENT / MATERIAL HAULED		MUST FILL OUT MILES / HRS. OF EQUIPMENT BEING HAULED		
UNIT	MODEL / MATERIAL	MILES	HOURS	ACCESSORIES
4610	International water	5	8.5	2 loads

Route of Travel: Jobsite

Fuel Purchase (Name & Address):

Number of Gallons:

Price Per Gallon:
Total Amount of Sale:
Purchaser (Name & Address):

Fuel Type:

DELIVERY / LOAD INSTRUCTIONS Start 009977.5

6:45 Am 009981.9
9:25 Am 009986.2

Received By:

Signature

Robert BeBout
Print Name

11-14-17
Date

RMCI INC
GENERAL CONTRACTOR

IFTA / IRP / WEIGHT DISTANCE POWER UNIT TRIP HAUL TICKET

EQUIPMENT / MATERIAL HAUL TICKET

MUST FILL OUT MILES / HRS. OF EQUIPMENT BEING HAULED

PO BOX 91447
Albuquerque, NM 87199
(505) 345-0008
(505) 345-0111 Fax

DATE: 11-15-17

Dispatch Location: 1611
Pickup Location: 1611
Delivery Location: 1611
Return Location: 1611
Vehicle/Trailer Used: 4610

Shop/Maintenance Transport ☐
Vendor Transport ☐
Job Transport ☐

Time Start: 6:30
Breakfast/Lunch/Dinner: 1/2
Time End: 5:30
Total Time: 10.5
NM Start Mileage: 498572
NM End Mileage: 498582
Total NM Miles: 10
Out of State Start Mileage: —
Out of State Return Mileage: —
Total Out of State Miles: —

Trip Origin (Latitude/Longitude):
Trip Destination (Latitude/Longitude):

EQUIPMENT / MATERIAL HAULED		MUST FILL OUT MILES / HRS. OF EQUIPMENT BEING HAULED		
UNIT	MODEL / MATERIAL	MILES	HOURS	ACCESSORIES
4610	Internat water	10	10.5	loads

Route of Travel: Jobsite

Fuel Purchase (Name & Address):

Number of Gallons:

Price Per Gallon:
Total Amount of Sale:
Purchaser (Name & Address):

Fuel Type:

DELIVERY / LOAD INSTRUCTIONS

Start 09986.2
6:55 AM 09990.8
10:35 AM 09995.3

Received By:

Signature

Robert BeBault
Print Name

11-15-17
Date

RMCI INC
GENERAL CONTRACTOR

IFTA / IRP / WEIGHT DISTANCE POWER UNIT TRIP HAUL TICKET

EQUIPMENT / MATERIAL HAUL TICKET

MUST FILL OUT MILES / HRS. OF EQUIPMENT BEING HAULED

PO BOX 91447
Albuquerque, NM 87199
(505) 345-0008
(505) 345-0111 Fax

DATE: 11-16-17

Dispatch Location: 161
Pickup Location: 1611
Delivery Location: 1611
Return Location: 1611
Vehicle/Trailer Used: 4610

Shop/Maintenance Transport ☐
Vendor Transport ☐
Job Transport ☐

Time Start: 6:30
Breakfast/Lunch/Dinner: ½
Time End: 4:00
Total Time: 9
NM Start Mileage: 498582
NM End Mileage: 498588
Total NM Miles: 6
Out of State Start Mileage: —
Out of State Return Mileage: —
Total Out of State Miles: —

Trip Origin (Latitude/Longitude):
Trip Destination (Latitude/Longitude):

EQUIPMENT / MATERIAL HAULED		MUST FILL OUT MILES / HRS. OF EQUIPMENT BEING HAULED		
UNIT	MODEL / MATERIAL	MILES	HOURS	ACCESSORIES
4610	International water	6	9	2 Loads

Route of Travel: Job site

Fuel Purchase (Name & Address):

Number of Gallons:

Price Per Gallon:
Total Amount of Sale:
Purchaser (Name & Address):

Fuel Type:

DELIVERY / LOAD INSTRUCTIONS

6:55AM Start 09995.3
10:53AM 09999.9
10002.5

Received By:

Signature

Robert BeBaut

Print Name

11-16-17

Date

RMCI INC
GENERAL CONTRACTOR

IFTA / IRP / WEIGHT DISTANCE POWER UNIT TRIP HAUL TICKET

EQUIPMENT / MATERIAL HAUL TICKET

MUST FILL OUT MILES / HRS. OF EQUIPMENT BEING HAULED

PO BOX 91447
Albuquerque, NM 87199
(505) 345-0008
(505) 345-0111 Fax

DATE: 11-17-17

Dispatch Location: 1611
Pickup Location: 1611
Delivery Location: 1611
Return Location: 1611
Vehicle/Trailer Used: 4610

Shop/Maintenance Transport ☐
Vendor Transport ☐
Job Transport ☐

Time Start: 6:30
Breakfast/Lunch/Dinner: —
Time End: 12:00
Total Time: 5.5
NM Start Mileage: 498588
NM End Mileage: 498590
Total NM Miles: 2
Out of State Start Mileage: —
Out of State Return Mileage: —
Total Out of State Miles: —

Trip Origin (Latitude/Longitude): _____
Trip Destination (Latitude/Longitude): _____

EQUIPMENT / MATERIAL HAULED		MUST FILL OUT MILES / HRS. OF EQUIPMENT BEING HAULED		
UNIT	MODEL / MATERIAL	MILES	HOURS	ACCESSORIES
4610	Interroad water	2	5.5	1 loads

Route of Travel: Jobsite

Fuel Purchase (Name & Address): _____

Number of Gallons: _____

Price Per Gallon: _____
Total Amount of Sale: _____
Purchaser (Name & Address): _____

Fuel Type: _____

DELIVERY / LOAD INSTRUCTIONS

7:00 AM

Start 10002.5
10006.6

Received By:

Signature

Robert BeBault
Print Name

11-17-17
Date

DRIVER'S VEHICLE INSPECTION REPORT

AS REQUIRED BY THE D.O.T. FEDERAL MOTOR CARRIER SAFETY REGULATIONS

CARRIER: RMCT

ADDRESS: 6211 Chappell Rd Alb NM

DATE: 11-20-17 TIME: 6:30 A.M. _____ P.M.

CHECK ANY DEFECTIVE ITEM AND GIVE DETAILS UNDER "REMARKS"

TRACTOR/ TRUCK NO. 4610 ODOMETER READING 498590

- ☐ Air Compressor
- ☐ Air Lines
- ☐ Battery
- ☐ Belts and Hoses
- ☐ Body
- ☐ Brake Accessories
- ☐ Brakes, Parking
- ☐ Brakes, Service
- ☐ Clutch
- ☑ Coupling Devices
- ☐ Defroster/Heater
- ☐ Drive Line
- ☐ Engine
- ☐ Exhaust
- ☑ Fifth Wheel
- ☐ Fluid Levels
- ☐ Frame and Assembly
- ☐ Front Axle
- ☐ Fuel Tanks
- ☐ Horn
- ☐ Lights
  - Head/Stop
  - Tail/Dash
  - Turn Indicators
  - Clearance/Marker
- ☐ Mirrors
- ☐ Muffler
- ☐ Oil Pressure
- ☐ Radiator
- ☐ Rear End
- ☐ Reflectors
- ☐ Safety Equipment
  - Fire Extinguisher
  - Flags/Flares/Fusees
  - Reflective Triangles
  - Spare Bulbs and Fuses
  - Spare Seal Beam
- ☐ Starter
- ☐ Steering
- ☐ Suspension System
- ☑ Tire Chains
- ☐ Tires
- ☐ Transmission
- ☑ Trip Recorder
- ☐ Wheels and Rims
- ☐ Windows
- ☐ Windshield Wipers
- ☑ Other

TRAILER(S) NO.(S) —

- ☐ Brake Connections
- ☐ Brakes
- ☐ Coupling Devices
- ☐ Coupling (King) Pin
- ☐ Doors
- ☐ Hitch
- ☐ Landing Gear
- ☐ Lights - All
- ☐ Reflectors/Reflective Tape
- ☐ Roof
- ☐ Suspension System
- ☐ Tarpaulin
- ☐ Tires
- ☐ Wheels and Rims
- ☐ Other

Remarks: Drain valve broken on Pto Housing

☑ CONDITION OF THE ABOVE VEHICLE IS SATISFACTORY

DRIVER'S SIGNATURE: [signature]

☐ ABOVE DEFECTS CORRECTED

☐ ABOVE DEFECTS NEED NOT BE CORRECTED FOR SAFE OPERATION OF VEHICLE

MECHANIC'S SIGNATURE: _____ DATE: _____

DRIVER'S SIGNATURE: _____ DATE: _____

ORIGINAL

© Copyright 2012 J. J. KELLER & ASSOCIATES, INC.®, Neenah, WI
USA • (800) 327-6868 • Printed in the United States

1862

DRIVER'S VEHICLE INSPECTION REPORT

AS REQUIRED BY THE D.O.T. FEDERAL MOTOR CARRIER SAFETY REGULATIONS

CARRIER: RMCI

ADDRESS: 6211 chappell rd Alb N.M

DATE: 11-21-17 TIME: 6:30 A.M. _____ P.M.

CHECK ANY DEFECTIVE ITEM AND GIVE DETAILS UNDER "REMARKS"

TRACTOR/ TRUCK NO. 4610 ODOMETER READING 488594

- ☐ Air Compressor
- ☐ Air Lines
- ☐ Battery
- ☐ Belts and Hoses
- ☐ Body
- ☐ Brake Accessories
- ☐ Brakes, Parking
- ☐ Brakes, Service
- ☐ Clutch
- ☑ Coupling Devices
- ☐ Defroster/Heater
- ☐ Drive Line
- ☐ Engine
- ☐ Exhaust
- ☑ Fifth Wheel
- ☐ Fluid Levels
- ☐ Frame and Assembly
- ☐ Front Axle
- ☐ Fuel Tanks
- ☐ Horn
- ☐ Lights
  - Head/Stop
  - Tail/Dash
  - Turn Indicators
  - Clearance/Marker
- ☐ Mirrors
- ☐ Muffler
- ☐ Oil Pressure
- ☐ Radiator
- ☐ Rear End
- ☐ Reflectors
- ☐ Safety Equipment
  - Fire Extinguisher
  - Flags/Flares/Fusees
  - Reflective Triangles
  - Spare Bulbs and Fuses
  - Spare Seal Beam
- ☐ Starter
- ☐ Steering
- ☐ Suspension System
- ☑ Tire Chains
- ☐ Tires
- ☐ Transmission
- ☑ Trip Recorder
- ☐ Wheels and Rims
- ☐ Windows
- ☐ Windshield Wipers
- ☑ Other

TRAILER(S) NO.(S) —

- ☐ Brake Connections
- ☐ Brakes
- ☐ Coupling Devices
- ☐ Coupling (King) Pin
- ☐ Doors
- ☐ Hitch
- ☐ Landing Gear
- ☐ Lights - All
- ☐ Reflectors/Reflective Tape
- ☐ Roof
- ☐ Suspension System
- ☐ Tarpaulin
- ☐ Tires
- ☐ Wheels and Rims
- ☐ Other

Remarks: Diesel Valve broken on PTO

☑ CONDITION OF THE ABOVE VEHICLE IS SATISFACTORY

DRIVER'S SIGNATURE: [signature]

☐ ABOVE DEFECTS CORRECTED

☐ ABOVE DEFECTS NEED NOT BE CORRECTED FOR SAFE OPERATION OF VEHICLE

MECHANIC'S SIGNATURE: _____ DATE: _____

DRIVER'S SIGNATURE: _____ DATE: _____

ORIGINAL

© Copyright 2012 J. J. KELLER & ASSOCIATES, INC.®, Neenah, WI
USA • (800) 327-6868 • Printed in the United States

1862

RMCI INC
GENERAL CONTRACTOR

IFTA / IRP / WEIGHT DISTANCE POWER UNIT TRIP HAUL TICKET

EQUIPMENT / MATERIAL HAUL TICKET

MUST FILL OUT MILES / HRS. OF EQUIPMENT BEING HAULED

PO BOX 91447
Albuquerque, NM 87199
(505) 345-0008
(505) 345-0111 Fax

DATE: 11-20-17

Dispatch Location: 1611
Pickup Location: 1611
Delivery Location: 1611
Return Location: 1611
Vehicle/Trailer Used: 4610

Shop/Maintenance Transport ☐
Vendor Transport ☐
Job Transport ☐

Time Start: 6:30
Breakfast/Lunch/Dinner: 1/2
Time End: 3:00
Total Time: 8
NM Start Mileage: 498590
NM End Mileage: 498594
Total NM Miles: 4
Out of State Start Mileage: —
Out of State Return Mileage: —
Total Out of State Miles: —

Trip Origin (Latitude/Longitude):
Trip Destination (Latitude/Longitude):

EQUIPMENT / MATERIAL HAULED		MUST FILL OUT MILES / HRS. OF EQUIPMENT BEING HAULED		
UNIT	MODEL / MATERIAL	MILES	HOURS	ACCESSORIES
4610	International water	4	8	1 loads

Route of Travel: Jobsite

Fuel Purchase (Name & Address):

Number of Gallons:

Price Per Gallon:
Total Amount of Sale:
Purchaser (Name & Address):

Fuel Type:

DELIVERY / LOAD INSTRUCTIONS start 10006.6
7:30 AM 10001.2

Received By:

Signature: Robert BeBault
Print Name: Robert BeBault
Date: 11-20-17

RMCI INC
GENERAL CONTRACTOR

IFTA / IRP / WEIGHT DISTANCE POWER UNIT TRIP HAUL TICKET

EQUIPMENT / MATERIAL HAUL TICKET

MUST FILL OUT MILES / HRS. OF EQUIPMENT BEING HAULED

PO BOX 91447
Albuquerque, NM 87199
(505) 345-0008
(505) 345-0111 Fax

DATE: 11-21-17

Dispatch Location: 1611
Pickup Location: 1611
Delivery Location: 1611
Return Location: 1611
Vehicle/Trailer Used: 4610

Shop/Maintenance Transport ☐
Vendor Transport ☐
Job Transport ☐

Time Start: 6:30
Breakfast/Lunch/Dinner: 12
Time End: 3:00
Total Time: 8
NM Start Mileage: 498594
NM End Mileage: 498596
Total NM Miles: 2
Out of State Start Mileage: —
Out of State Return Mileage: —
Total Out of State Miles: —

Trip Origin (Latitude/Longitude): _____
Trip Destination (Latitude/Longitude): _____

EQUIPMENT / MATERIAL HAULED		MUST FILL OUT MILES / HRS. OF EQUIPMENT BEING HAULED		
UNIT	MODEL / MATERIAL	MILES	HOURS	ACCESSORIES
4610	Interrent water	2	8	1 loads

Route of Travel: _____
Fuel Purchase (Name & Address): _____
Number of Gallons: _____

Price Per Gallon: _____
Total Amount of Sale: _____
Purchaser (Name & Address): _____
Fuel Type: _____

DELIVERY / LOAD INSTRUCTIONS

Start 10011.2
6:55Am 10015.8

Received By:

Signature: Robert Bebault
Print Name: Robert Bebault
Date: 11-21-17

RMCI INC
GENERAL CONTRACTOR
N.M. LICENSE No. 31964

EQUIPMENT CHECK LIST
LISTA DE REVISION DE MAQUINARIA

MODEL *(modelo)* ~~JD Backhoe~~ Volvo	WEEK ENDING *(fin de semana)* ~~Date~~ 11-23-17
ID NO. *(numero de la maquina)* ~~#1449~~ 2310	OPERATOR *(operador)* Jesus Moya
JOB NO. *(numero de trabajo)* 1611	HOURS / MILEAGE *(horas o millaje)* 12408

The Following Items To Be Checked Or Lubricated Daily As They Apply
(revisar o lubricar esta lista a diario)

CHECK *(revisar)*	MON *(lun)*	TUES *(mar)*	WED *(mier)*	THURS *(juev)*	FRI *(Vier)*
ENGINE OIL *(lubricasion del motor)*	✓	✓	✓		
AIR CLEANER *(filtro de aire)*	✓	✓	✓		
TRANSMISSION *(trasmisión)*	✓	✓	✓		
RADIATOR *(radiador)*	✓	✓	✓		
FUEL TANK *(tanque de disel o gasolina)*	✓	✓	✓		
AIR TANK *(tanque de aire)*					
TIRES *(presion de llantas)*	✓	✓	✓		
PARKING BRAKE/BRAKES *(freno de mano/frenos)*	✓	✓	✓		
HORN/BACK-UP-ALARM *(pito/alarma de reversa)*	✓	✓	✓		
GAUGES/OR INDICATORS (indicadores de sistemas)	✓	✓	✓		
CAB AND WINDOWS CLEAN (*cabina y vidrios limpios*)	✓	✓	✓		

LUBRICATE *(lubricasion)*	MON *(lun)*	TUES *(mar)*	WED *(mier)*	THURS *(juev)*	FRI *(Vier)*
STEERING OR SWIVEL PINS *(pernos de dirección)*					
BUCKET PINS *(pernos de cubeta)*	✓	✓	✓		

REMARKS/PROBLEMS *(reporte de problemas)*:

Operator (operador)	Date (fecha)	Superintendent *(superintendente)*	Date (fecha)
	11-22-17	Ed Hyde	

RMCI INC
GENERAL CONTRACTOR
N.M. LICENSE No. 31964

EQUIPMENT CHECK LIST
LISTA DE REVISION DE MAQUINARIA

MODEL *(modelo)* JD BackHoe	WEEK ENDING *(fin de semana* ~~8/27~~ 11-23-17
ID NO. *(numero de la maquina)* # 1415	OPERATOR *(operador)* Jesus Moya
JOB NO. *(numero de trabajo)* 1611	HOURS / MILEAGE *(horas o millaje)*

The Following Items To Be Checked Or Lubricated Daily As They Apply
(revisar o lubricar esta lista a diario)

CHECK *(revisar)*	MON *(lun)*	TUES *(mar)*	WED *(mier)*	THURS *(juev)*	FRI *(Vier)*
ENGINE OIL *(lubricasion del motor)*	✓	–	✓		
AIR CLEANER *(filtro de aire)*	✓	✓	–		
TRANSMISSION *(trasmisión)*	✓	✓	✓		
RADIATOR *(radiador)*	✓	✓	✓		
FUEL TANK *(tanque de disel o gasolina)*	–	✓	✓		
AIR TANK *(tanque de aire)*					
TIRES *(presion de llantas)*	✓	✓	✓		
PARKING BRAKE/BRAKES *(freno de mano/frenos)*	✓	✓	✓		
HORN/BACK-UP-ALARM *(pito/alarma de reversa)*	✓	✓	✓		
GAUGES/OR INDICATORS (indicadores de sistemas)	✓	✓	✓		
CAB AND WINDOWS CLEAN (*cabina y vidrios limpios*)	✓	✓	✓		

LUBRICATE *(lubricasion)*	MON *(lun)*	TUES *(mar)*	WED *(mier)*	THURS *(juev)*	FRI *(Vier)*
STEERING OR SWIVEL PINS *(pernos de dirección)*					
BUCKET PINS *(pernos de cubeta)*	✓	✓	✓		

REMARKS/PROBLEMS *(reporte de problemas)*:

Operator (operador)	Date (fecha)	Superintendent *(superintendente)*	Date (fecha)
Jesus Moya	11-22-17	Ed Hyde	

DRIVER'S VEHICLE INSPECTION REPORT

AS REQUIRED BY THE D.O.T. FEDERAL MOTOR CARRIER SAFETY REGULATIONS

CARRIER: RMCI

ADDRESS: 6211 chappell rd Alb N.M

DATE: 11-27-17 TIME: 6 30 A.M. P.M.

CHECK ANY DEFECTIVE ITEM AND GIVE DETAILS UNDER "REMARKS"

TRACTOR/ TRUCK NO. 4610 ODOMETER READING 498556

- ☐ Air Compressor
- ☐ Air Lines
- ☐ Battery
- ☐ Belts and Hoses
- ☐ Body
- ☐ Brake Accessories
- ☐ Brakes, Parking
- ☐ Brakes, Service
- ☐ Clutch
- ☑ Coupling Devices
- ☐ Defroster/Heater
- ☐ Drive Line
- ☐ Engine
- ☐ Exhaust
- ☑ Fifth Wheel
- ☐ Fluid Levels
- ☐ Frame and Assembly
- ☐ Front Axle
- ☐ Fuel Tanks
- ☐ Horn
- ☐ Lights
  - Head/Stop
  - Tail/Dash
  - Turn Indicators
  - Clearance/Marker
- ☐ Mirrors
- ☐ Muffler
- ☐ Oil Pressure
- ☐ Radiator
- ☐ Rear End
- ☐ Reflectors
- ☐ Safety Equipment
  - Fire Extinguisher
  - Flags/Flares/Fusees
  - Reflective Triangles
  - Spare Bulbs and Fuses
  - Spare Seal Beam
- ☐ Starter
- ☐ Steering
- ☐ Suspension System
- ☑ Tire Chains
- ☐ Tires
- ☐ Transmission
- ☑ Trip Recorder
- ☐ Wheels and Rims
- ☐ Windows
- ☐ Windshield Wipers
- ☑ Other

TRAILER(S) NO.(S) —

- ☐ Brake Connections
- ☐ Brakes
- ☐ Coupling Devices
- ☐ Coupling (King) Pin
- ☐ Doors
- ☐ Hitch
- ☐ Landing Gear
- ☐ Lights - All
- ☐ Reflectors/Reflective Tape
- ☐ Roof
- ☐ Suspension System
- ☐ Tarpaulin
- ☐ Tires
- ☐ Wheels and Rims
- ☐ Other

Remarks: Drain valve not working on PTO

☑ CONDITION OF THE ABOVE VEHICLE IS SATISFACTORY

DRIVER'S SIGNATURE: Robert Bob Ballard

☐ ABOVE DEFECTS CORRECTED

☐ ABOVE DEFECTS NEED NOT BE CORRECTED FOR SAFE OPERATION OF VEHICLE

MECHANIC'S SIGNATURE: _____ DATE: _____

DRIVER'S SIGNATURE: _____ DATE: _____

ORIGINAL

© Copyright 2012 J. J. KELLER & ASSOCIATES, INC.®, Neenah, WI USA • (800) 327-6868 • Printed in the United States

DRIVER'S VEHICLE INSPECTION REPORT

AS REQUIRED BY THE D.O.T. FEDERAL MOTOR CARRIER SAFETY REGULATIONS

CARRIER: RMCT

ADDRESS: 6211 chappell rd Alb N.M

DATE: 11-28-17 TIME: 6:30 A.M. _____ P.M.

CHECK ANY DEFECTIVE ITEM AND GIVE DETAILS UNDER "REMARKS"

TRACTOR/ TRUCK NO. 4610 ODOMETER READING 498606

- ☐ Air Compressor
- ☐ Air Lines
- ☐ Battery
- ☐ Belts and Hoses
- ☐ Body
- ☐ Brake Accessories
- ☐ Brakes, Parking
- ☐ Brakes, Service
- ☐ Clutch
- ☑ Coupling Devices
- ☐ Defroster/Heater
- ☐ Drive Line
- ☐ Engine
- ☐ Exhaust
- ☑ Fifth Wheel
- ☐ Fluid Levels
- ☐ Frame and Assembly
- ☐ Front Axle
- ☐ Fuel Tanks
- ☐ Horn
- ☐ Lights
  - Head/Stop
  - Tail/Dash
  - Turn Indicators
  - Clearance/Marker
- ☐ Mirrors
- ☐ Muffler
- ☐ Oil Pressure
- ☐ Radiator
- ☐ Rear End
- ☐ Reflectors
- ☐ Safety Equipment
  - Fire Extinguisher
  - Flags/Flares/Fusees
  - Reflective Triangles
  - Spare Bulbs and Fuses
  - Spare Seal Beam
- ☐ Starter
- ☐ Steering
- ☐ Suspension System
- ☑ Tire Chains
- ☐ Tires
- ☐ Transmission
- ☑ Trip Recorder
- ☐ Wheels and Rims
- ☐ Windows
- ☐ Windshield Wipers
- ☑ Other

TRAILER(S) NO.(S) _____

- ☐ Brake Connections
- ☐ Brakes
- ☐ Coupling Devices
- ☐ Coupling (King) Pin
- ☐ Doors
- ☐ Hitch
- ☐ Landing Gear
- ☐ Lights - All
- ☐ Reflectors/Reflective Tape
- ☐ Roof
- ☐ Suspension System
- ☐ Tarpaulin
- ☐ Tires
- ☐ Wheels and Rims
- ☐ Other

Remarks: valve on PTO broken

☑ CONDITION OF THE ABOVE VEHICLE IS SATISFACTORY

DRIVER'S SIGNATURE: [signature]

☐ ABOVE DEFECTS CORRECTED

☐ ABOVE DEFECTS NEED NOT BE CORRECTED FOR SAFE OPERATION OF VEHICLE

MECHANIC'S SIGNATURE: _____ DATE: _____

DRIVER'S SIGNATURE: _____ DATE: _____

ORIGINAL

© Copyright 2012 J. J. KELLER & ASSOCIATES, INC.®, Neenah, WI
USA • (800) 327-6868 • Printed in the United States

DRIVER'S VEHICLE INSPECTION REPORT

AS REQUIRED BY THE D.O.T. FEDERAL MOTOR CARRIER SAFETY REGULATIONS

CARRIER: RMCT

ADDRESS: 6211 chappell rd A1b nnm

DATE: 11-29-17 TIME: _____ A.M. _____ P.M.

CHECK ANY DEFECTIVE ITEM AND GIVE DETAILS UNDER "REMARKS"

TRACTOR/ TRUCK NO. 4610 ODOMETER READING 498612

- ☐ Air Compressor
- ☐ Air Lines
- ☐ Battery
- ☐ Belts and Hoses
- ☐ Body
- ☐ Brake Accessories
- ☐ Brakes, Parking
- ☐ Brakes, Service
- ☐ Clutch
- ☑ Coupling Devices
- ☐ Defroster/Heater
- ☐ Drive Line
- ☐ Engine
- ☐ Exhaust
- ☑ Fifth Wheel
- ☐ Fluid Levels
- ☐ Frame and Assembly
- ☐ Front Axle
- ☐ Fuel Tanks
- ☐ Horn
- ☑ Lights
  - Head/Stop
  - Tail/Dash
  - Turn Indicators
  - Clearance/Marker
- ☐ Mirrors
- ☐ Muffler
- ☐ Oil Pressure
- ☐ Radiator
- ☐ Rear End
- ☐ Reflectors
- ☐ Safety Equipment
  - Fire Extinguisher
  - Flags/Flares/Fusees
  - Reflective Triangles
  - Spare Bulbs and Fuses
  - Spare Seal Beam
- ☐ Starter
- ☐ Steering
- ☐ Suspension System
- ☑ Tire Chains
- ☐ Tires
- ☐ Transmission
- ☑ Trip Recorder
- ☐ Wheels and Rims
- ☐ Windows
- ☐ Windshield Wipers
- ☑ Other

TRAILER(S) NO.(S) —

- ☐ Brake Connections
- ☐ Brakes
- ☐ Coupling Devices
- ☐ Coupling (King) Pin
- ☐ Doors
- ☐ Hitch
- ☐ Landing Gear
- ☐ Lights - All
- ☐ Reflectors/Reflective Tape
- ☐ Roof
- ☐ Suspension System
- ☐ Tarpaulin
- ☐ Tires
- ☐ Wheels and Rims
- ☐ Other

Remarks: valve on pto broken, no turn sig or 4-way flashers

☑ CONDITION OF THE ABOVE VEHICLE IS SATISFACTORY

DRIVER'S SIGNATURE: [signature]

☐ ABOVE DEFECTS CORRECTED

☐ ABOVE DEFECTS NEED NOT BE CORRECTED FOR SAFE OPERATION OF VEHICLE

MECHANIC'S SIGNATURE: _____ DATE: _____

DRIVER'S SIGNATURE: _____ DATE: _____

ORIGINAL

© Copyright 2012 J. J. KELLER & ASSOCIATES, INC.®, Neenah, WI
USA • (800) 327-6868 • Printed in the United States

DRIVER'S VEHICLE INSPECTION REPORT

AS REQUIRED BY THE D.O.T. FEDERAL MOTOR CARRIER SAFETY REGULATIONS

CARRIER: RMCI

ADDRESS: 621 Chappell rd Alb N.M

DATE: 11-30-17 TIME: _____ A.M. _____ P.M.

CHECK ANY DEFECTIVE ITEM AND GIVE DETAILS UNDER "REMARKS"

TRACTOR/ TRUCK NO. 4610 ODOMETER READING 498619

- ☐ Air Compressor
- ☐ Air Lines
- ☐ Battery
- ☐ Belts and Hoses
- ☐ Body
- ☐ Brake Accessories
- ☐ Brakes, Parking
- ☐ Brakes, Service
- ☐ Clutch
- ☑ Coupling Devices
- ☐ Defroster/Heater
- ☐ Drive Line
- ☐ Engine
- ☐ Exhaust
- ☑ Fifth Wheel
- ☐ Fluid Levels
- ☐ Frame and Assembly
- ☐ Front Axle
- ☐ Fuel Tanks
- ☐ Horn
- ☐ Lights
  - Head/Stop
  - Tail/Dash
  - Turn Indicators
  - Clearance/Marker
- ☐ Mirrors
- ☐ Muffler
- ☐ Oil Pressure
- ☐ Radiator
- ☐ Rear End
- ☐ Reflectors
- ☐ Safety Equipment
  - Fire Extinguisher
  - Flags/Flares/Fusees
  - Reflective Triangles
  - Spare Bulbs and Fuses
  - Spare Seal Beam
- ☐ Starter
- ☐ Steering
- ☐ Suspension System
- ☑ Tire Chains
- ☐ Tires
- ☐ Transmission
- ☑ Trip Recorder
- ☐ Wheels and Rims
- ☐ Windows
- ☐ Windshield Wipers
- ☐ Other

TRAILER(S) NO.(S) —

- ☐ Brake Connections
- ☐ Brakes
- ☐ Coupling Devices
- ☐ Coupling (King) Pin
- ☐ Doors
- ☐ Hitch
- ☐ Landing Gear
- ☐ Lights - All
- ☐ Reflectors/Reflective Tape
- ☐ Roof
- ☐ Suspension System
- ☐ Tarpaulin
- ☐ Tires
- ☐ Wheels and Rims
- ☐ Other

Remarks: Driver Greased PTO, U-Joints and steering as well as Front end on truck

☑ CONDITION OF THE ABOVE VEHICLE IS SATISFACTORY

DRIVER'S SIGNATURE: Ralph BeBout

☐ ABOVE DEFECTS CORRECTED

☐ ABOVE DEFECTS NEED NOT BE CORRECTED FOR SAFE OPERATION OF VEHICLE

MECHANIC'S SIGNATURE: _____ DATE: _____

DRIVER'S SIGNATURE: _____ DATE: _____

ORIGINAL

© Copyright 2012 J. J. KELLER & ASSOCIATES, INC.®, Neenah, WI USA • (800) 327-6868 • Printed in the United States

DRIVER'S VEHICLE INSPECTION REPORT

AS REQUIRED BY THE D.O.T. FEDERAL MOTOR CARRIER SAFETY REGULATIONS

CARRIER: RMCI

ADDRESS: 6211 Chappell rd Alb N.M

DATE: 12-1-17 TIME: 6:30 A.M. _____ P.M.

CHECK ANY DEFECTIVE ITEM AND GIVE DETAILS UNDER "REMARKS"

TRACTOR/ TRUCK NO. 4160 ODOMETER READING 498622

- ☐ Air Compressor
- ☐ Air Lines
- ☐ Battery
- ☐ Belts and Hoses
- ☐ Body
- ☐ Brake Accessories
- ☐ Brakes, Parking
- ☐ Brakes, Service
- ☐ Clutch
- ☑ Coupling Devices
- ☐ Defroster/Heater
- ☐ Drive Line
- ☐ Engine
- ☐ Exhaust
- ☑ Fifth Wheel
- ☐ Fluid Levels
- ☐ Frame and Assembly
- ☐ Front Axle
- ☐ Fuel Tanks
- ☐ Horn
- ☐ Lights
  - Head/Stop
  - Tail/Dash
  - Turn Indicators
  - Clearance/Marker
- ☐ Mirrors
- ☐ Muffler
- ☐ Oil Pressure
- ☐ Radiator
- ☐ Rear End
- ☐ Reflectors
- ☐ Safety Equipment
  - Fire Extinguisher
  - Flags/Flares/Fusees
  - Reflective Triangles
  - Spare Bulbs and Fuses
  - Spare Seal Beam
- ☐ Starter
- ☐ Steering
- ☐ Suspension System
- ☑ Tire Chains
- ☐ Tires
- ☐ Transmission
- ☑ Trip Recorder
- ☐ Wheels and Rims
- ☐ Windows
- ☐ Windshield Wipers
- ☐ Other

TRAILER(S) NO.(S) ✓

- ☐ Brake Connections
- ☐ Brakes
- ☐ Coupling Devices
- ☐ Coupling (King) Pin
- ☐ Doors
- ☐ Hitch
- ☐ Landing Gear
- ☐ Lights - All
- ☐ Reflectors/Reflective Tape
- ☐ Roof
- ☐ Suspension System
- ☐ Tarpaulin
- ☐ Tires
- ☐ Wheels and Rims
- ☐ Other

Remarks: _____

☑ CONDITION OF THE ABOVE VEHICLE IS SATISFACTORY

DRIVER'S SIGNATURE: [signature]

☐ ABOVE DEFECTS CORRECTED

☐ ABOVE DEFECTS NEED NOT BE CORRECTED FOR SAFE OPERATION OF VEHICLE

MECHANIC'S SIGNATURE: _____ DATE: _____

DRIVER'S SIGNATURE: _____ DATE: _____

ORIGINAL

© Copyright 2012 J. J. KELLER & ASSOCIATES, INC.®, Neenah, WI USA • (800) 327-6868 • Printed in the United States

RMCI INC
GENERAL CONTRACTOR

IFTA / IRP / WEIGHT DISTANCE POWER UNIT TRIP HAUL TICKET

EQUIPMENT / MATERIAL HAUL TICKET

MUST FILL OUT MILES / HRS. OF EQUIPMENT BEING HAULED

PO BOX 91447
Albuquerque, NM 87199
(505) 345-0008
(505) 345-0111 Fax

DATE: 11-27-17

Dispatch Location: 1611
Pickup Location: 1611
Delivery Location: 1611
Return Location: 1611
Vehicle/Trailer Used: 4610

Shop/Maintenance Transport ☐
Vendor Transport ☐
Job Transport ☐

Time Start: 6:30
Breakfast/Lunch/Dinner: 1/2
Time End: 3:00
Total Time: 8
NM Start Mileage: 498596
NM End Mileage: 498606
Total NM Miles: 10
Out of State Start Mileage: —
Out of State Return Mileage: —
Total Out of State Miles: —

Trip Origin (Latitude/Longitude): _____
Trip Destination (Latitude/Longitude): _____

EQUIPMENT / MATERIAL HAULED		MUST FILL OUT MILES / HRS. OF EQUIPMENT BEING HAULED		
UNIT	MODEL / MATERIAL	MILES	HOURS	ACCESSORIES
4610	Interpoint water	10	8	1 loads

Route of Travel: Job site

Fuel Purchase (Name & Address): _____

Number of Gallons: _____

Price Per Gallon: _____
Total Amount of Sale: _____
Purchaser (Name & Address): _____

Fuel Type: _____

DELIVERY / LOAD INSTRUCTIONS Start 10015.8
7:00 AM 10019.0

Received By:

Robert BeBault
Signature

Robert BeBault
Print Name

11-27-17
Date

RMCI INC
GENERAL CONTRACTOR

IFTA / IRP / WEIGHT DISTANCE POWER UNIT TRIP HAUL TICKET

EQUIPMENT / MATERIAL HAUL TICKET

MUST FILL OUT MILES / HRS. OF EQUIPMENT BEING HAULED

PO BOX 91447
Albuquerque, NM 87199
(505) 345-0008
(505) 345-0111 Fax

DATE: 11-28-17

Dispatch Location: 1611
Pickup Location: 1611
Delivery Location: 1611
Return Location: 1611
Vehicle/Trailer Used: 4610

Shop/Maintenance Transport ☐
Vendor Transport ☐
Job Transport ☐

Time Start: 6:30
Breakfast/Lunch/Dinner: 1/2
Time End: 3:00
Total Time: 8
NM Start Mileage: 498606
NM End Mileage: 498612
Total NM Miles: 6
Out of State Start Mileage: —
Out of State Return Mileage: —
Total Out of State Miles: —

Trip Origin (Latitude/Longitude):
Trip Destination (Latitude/Longitude):

EQUIPMENT / MATERIAL HAULED		MUST FILL OUT MILES / HRS. OF EQUIPMENT BEING HAULED		
UNIT	MODEL / MATERIAL	MILES	HOURS	ACCESSORIES
4610	Internat water	6	8	1 loads

Route of Travel: Jobsite

Fuel Purchase (Name & Address):

Number of Gallons:

Price Per Gallon:
Total Amount of Sale:
Purchaser (Name & Address):

Fuel Type:

DELIVERY / LOAD INSTRUCTIONS start 10019.0
6:55 10021.3

Received By:

Signature

Robert BeBault
Print Name

11-28-17
Date

RMCI INC
GENERAL CONTRACTOR

IFTA / IRP / WEIGHT DISTANCE POWER UNIT TRIP HAUL TICKET

EQUIPMENT / MATERIAL HAUL TICKET

MUST FILL OUT MILES / HRS. OF EQUIPMENT BEING HAULED

PO BOX 91447
Albuquerque, NM 87199
(505) 345-0008
(505) 345-0111 Fax

DATE: 11-29-17

Dispatch Location: 1611
Pickup Location: 1611
Delivery Location: 1611
Return Location: 1611
Vehicle/Trailer Used: 4610

Shop/Maintenance Transport ☐
Vendor Transport ☐
Job Transport ☐

Time Start: 6:30
Breakfast/Lunch/Dinner: Yz
Time End: 6,100
Total Time: 11.5
NM Start Mileage: 498612
NM End Mileage: 498619
Total NM Miles: 7
Out of State Start Mileage: —
Out of State Return Mileage: —
Total Out of State Miles: —

Trip Origin (Latitude/Longitude):
Trip Destination (Latitude/Longitude):

EQUIPMENT / MATERIAL HAULED		MUST FILL OUT MILES / HRS. OF EQUIPMENT BEING HAULED		
UNIT	MODEL / MATERIAL	MILES	HOURS	ACCESSORIES
4610	Internat water	7	11.5	1 loads

Route of Travel: Jobsite

Fuel Purchase (Name & Address):

Number of Gallons:

Price Per Gallon:
Total Amount of Sale:
Purchaser (Name & Address):

Fuel Type:

DELIVERY / LOAD INSTRUCTIONS start 10021.3
7.05 am 10024.8

Received By:

Signature

Robert Belault
Print Name

11-29-17
Date

RMCI GENERAL CONTRACTOR

IFTA / IRP / WEIGHT DISTANCE POWER UNIT TRIP HAUL TICKET

EQUIPMENT / MATERIAL HAUL TICKET

MUST FILL OUT MILES / HRS. OF EQUIPMENT BEING HAULED

PO BOX 91447
Albuquerque, NM 87199
(505) 345-0008
(505) 345-0111 Fax

DATE: 11-30-17

Dispatch Location: 169
Pickup Location: 1611
Delivery Location: 1611
Return Location: 1611
Vehicle/Trailer Used: 4610

Shop/Maintenance Transport ☐
Vendor Transport ☐
Job Transport ☐

Time Start: 6:30
Breakfast/Lunch/Dinner: 1/2
Time End:
Total Time:
NM Start Mileage: 498619
NM End Mileage: 498622
Total NM Miles: 3
Out of State Start Mileage: —
Out of State Return Mileage: —
Total Out of State Miles: —

Trip Origin (Latitude/Longitude):
Trip Destination (Latitude/Longitude):

EQUIPMENT / MATERIAL HAULED		MUST FILL OUT MILES / HRS. OF EQUIPMENT BEING HAULED		
UNIT	MODEL / MATERIAL	MILES	HOURS	ACCESSORIES
4610	Internat water	3		2 loads

Route of Travel: Ibogite

Fuel Purchase (Name & Address):

Number of Gallons:

Price Per Gallon:
Total Amount of Sale:
Purchaser (Name & Address):

Fuel Type:

DELIVERY / LOAD INSTRUCTIONS	Start 100241.8
7:05 AM	100291.5
8:00 am	100324

Received By:

Signature: Robert BeBault

Print Name: Robert BeBault

Date: 11-30-17

RMCI INC
GENERAL CONTRACTOR

IFTA / IRP / WEIGHT DISTANCE POWER UNIT TRIP HAUL TICKET

EQUIPMENT / MATERIAL HAUL TICKET

MUST FILL OUT MILES / HRS. OF EQUIPMENT BEING HAULED

PO BOX 91447
Albuquerque, NM 87199
(505) 345-0008
(505) 345-0111 Fax

DATE: 12-1-17

Dispatch Location: 1611
Pickup Location: 1611
Delivery Location: 1611
Return Location: 1611
Vehicle/Trailer Used: 4610

Shop/Maintenance Transport ☐
Vendor Transport ☐
Job Transport ☐

Time Start: 6:30
Breakfast/Lunch/Dinner: 1/2
Time End: 3:00
Total Time: 8
NM Start Mileage: 498622
NM End Mileage: 498626
Total NM Miles: 4
Out of State Start Mileage: —
Out of State Return Mileage: —
Total Out of State Miles: —

Trip Origin (Latitude/Longitude):
Trip Destination (Latitude/Longitude):

EQUIPMENT / MATERIAL HAULED		MUST FILL OUT MILES / HRS. OF EQUIPMENT BEING HAULED		
UNIT	MODEL / MATERIAL	MILES	HOURS	ACCESSORIES
4610	Internat water	4	8	2 loads

Route of Travel: Jobsite

Fuel Purchase (Name & Address):

Number of Gallons:

Price Per Gallon:
Total Amount of Sale:
Purchaser (Name & Address):

Fuel Type:

DELIVERY / LOAD INSTRUCTIONS	Start 10032.4
7:05 AM	160 36.4
2:00 pm	100 38.6

Received By:

Signature

Robert BeBault
Print Name

12-1-17
Date

RMCI INC
GENERAL CONTRACTOR
N.M. LICENSE No. 31964

EQUIPMENT CHECK LIST
LISTA DE REVISION DE MAQUINARIA

MODEL *(modelo)* ~~JD Backhoe~~ L-120 LOADER	WEEK ENDING *(fin de semana* ~~9-2-17~~ 12-2-17
ID NO. *(numero de la maquina)* ~~# 1416~~ 2310	OPERATOR *(operador)* JESUS MOYA
JOB NO. *(numero de trabajo)* **1611**	HOURS / MILEAGE *(horas o millaje)* 12417

The Following Items To Be Checked Or Lubricated Daily As They Apply
(revisar o lubricar esta lista a diario)

CHECK *(revisar)*	MON *(lun)*	TUES *(mar)*	WED *(mier)*	THURS *(juev)*	FRI *(Vier)*
ENGINE OIL *(lubricasion del motor)*	✓	✓	✓	✓	✓
AIR CLEANER *(filtro de aire)*	✓	✓	✓	✓	✓
TRANSMISSION *(trasmisión)*	✓	✓	✓	✓	✓
RADIATOR *(radiador)*	✓	✓	✓	✓	✓
FUEL TANK *(tanque de disel o gasolina)*	✓	✓	✓	✓	✓
AIR TANK *(tanque de aire)*	4	4	4	4	4
TIRES *(presion de llantas)*	✓	✓	✓	✓	✓
PARKING BRAKE/BRAKES *(freno de mano/frenos)*	✓	✓	✓	✓	✓
HORN/BACK-UP-ALARM *(pito/alarma de reversa)*	✓	✓	✓	✓	✓
GAUGES/OR INDICATORS (indicadores de sistemas)	✓	✓	✓	✓	✓
CAB AND WINDOWS CLEAN (*cabina y vidrios limpios*)	✓	✓	✓	✓	✓

LUBRICATE *(lubricasion)*	MON *(lun)*	TUES *(mar)*	WED *(mier)*	THURS *(juev)*	FRI *(Vier)*
STEERING OR SWIVEL PINS *(pernos de dirección)*					
BUCKET PINS *(pernos de cubeta)*					

REMARKS/PROBLEMS *(reporte de problemas)*: FIRE EXTINGUISHER BRACKET NEEDS MOUNTED

Operator (operador)	Date (fecha)	Superintendent *(superintendente)*	Date (fecha)
J. Moya	12-1-17	Ed Hyde	

RMCI INC
GENERAL CONTRACTOR
N.M. LICENSE No. 31984

EQUIPMENT CHECK LIST
LISTA DE REVISION DE MAQUINARIA

MODEL *(modelo)* JD BackHoe	WEEK ENDING *(fin de semana)* 12-02-17
ID NO. *(numero de la maquina)* # 1415	OPERATOR *(operador)* Jesus Moya
JOB NO. *(numero de trabajo)* 1611	HOURS / MILEAGE *(horas o millaje)* 5079

The Following Items To Be Checked Or Lubricated Daily As They Apply
(revisar o lubricar esta lista a diario)

CHECK *(revisar)*	MON *(lun)*	TUES *(mar)*	WED *(mier)*	THURS *(juev)*	FRI *(Vier)*
ENGINE OIL *(lubricasion del motor)*	✓	✓	✓	✓	✓
AIR CLEANER *(filtro de aire)*	✓	✓	✓	✓	✓
TRANSMISSION *(trasmisión)*	✓	✓	✓	✓	✓
RADIATOR *(radiador)*	✓	✓	✓	✓	✓
FUEL TANK *(tanque de disel o gasolina)*	✓	✓	✓	✓	✓
AIR TANK *(tanque de aire)*					
TIRES *(presion de llantas)*	✓	✓	✓	✓	✓
PARKING BRAKE/BRAKES *(freno de mano/frenos)*	✓	✓	✓	✓	✓
HORN/BACK-UP-ALARM *(pito/alarma de reversa)*	✓	✓	✓	✓	✓
GAUGES/OR INDICATORS (indicadores de sistemas)	✓	✓	✓	✓	✓
CAB AND WINDOWS CLEAN (*cabina y vidrios limpios*)	✓	✓	✓	✓	✓

LUBRICATE *(lubricasion)*	MON *(lun)*	TUES *(mar)*	WED *(mier)*	THURS *(juev)*	FRI *(Vier)*
STEERING OR SWIVEL PINS *(pernos de dirección)*	✓	✓	✓	✓	
BUCKET PINS *(pernos de cubeta)*	✓	✓	✓	✓	✓

REMARKS/PROBLEMS *(reporte de problemas)*:

Operator (operador)	Date (fecha)	Superintendent *(superintendente)*	Date (fecha)
JMoya	12-01-17	Ed Hyde	

APPENDIX B

Submittals

(Provided on compact disc)

- **Attachment 1: Engineer-Approved Submittals**
- **Attachment 2: Field Change Approval Emails**

Status Date: **31-Jan-2018**

SUBMITTAL LOG
KIRTLAND AFB BULK FUELS FACILITY
CONTRACT NUMBER W912DR-12-D-0006 DM01
KAFB-106239 Conveyance Line Installation

Submittal Tracking #	Subcontractor	Spec. Section/ Doc.	Paragraph	Document Description/Title	Submittal Deadline	Submittal/ Resubmittal Date	Approval Date Date	Status	Comments
1	RMCI, Inc.	40 05 13	Pipelines, Liquid Process Piping	HDPE Pipe and Fittings	7/20/17 10:16 AM	7/21/17 3:00 PM	7/25/17 8:21 AM	Complete	
2	RMCI, Inc.	00 00 00	No Spec	Bilco Hatches	7/20/17 12:25 PM	7/25/17 11:00 AM	7/28/17 2:42 PM	Complete	
3	RMCI, Inc.	00 00 00	No Spec	Directional Drill Conduit	8/1/17 8:00 AM	8/2/17 8:00 AM	8/2/17 9:55 AM	Complete	
4	RMCI, Inc.	00 00 00	No Spec	Concrete Mix Design	8/1/17 8:00 AM	8/2/17 8:00 AM	8/2/17 9:48 AM	Complete	
5	RMCI, Inc.	31 00 00	Earthwork	Buried Warning Tape	8/1/17 8:00 AM	8/2/17 8:00 AM	8/2/17 9:52 AM	Complete	
6	RMCI, Inc.	40 05 13	Pipelines, Liquid Process Piping	Nuts, Bolts, Gasket Kits	8/1/17 8:00 AM	8/31/17 12:07 PM	9/6/17 10:26 AM	Complete	
7	RMCI, Inc.	00 00 00	No Spec	Tracer Wire	8/1/17 8:00 AM	8/16/17 8:30 AM	8/16/17 3:39 PM	Complete	
8	RMCI, Inc.	40 05 13	Pipelines, Liquid Process Piping	Steel Piping	8/1/17 8:00 AM	8/16/17 8:30 AM	8/16/17 3:29 PM	Complete	
9	RMCI, Inc.	40 05 13	Pipelines, Liquid Process Piping	Check Valve	8/1/17 8:00 AM	9/13/17 7:50 AM	9/13/17 4:40 PM	Complete	Resubmitted on 9/13/17
10	RMCI, Inc.	40 05 13	Pipelines, Liquid Process Piping	Pipe Supports	8/1/17 8:00 AM	8/3/17 12:50 PM	8/3/17 3:34 PM	Complete	
11	RMCI, Inc.	41 05 13	Pipelines, Liquid Process Piping	Wall Sleeve and Link Seal	8/1/17 8:00 AM	8/16/17 8:45 AM	8/16/17 3:22 PM	Complete	
12	RMCI, Inc.	40 05 13	Pipelines, Liquid Process Piping	Leak Detection System	8/1/17 8:00 AM	8/4/17 8:48 AM	8/7/17 10:30 AM	Complete	
13	RMCI, Inc.	00 00 00	No Spec	Basecourse Underneath Electrical Pad	9/7/17 12:13 PM	9/7/17 3:20 PM	9/12/17 3:21 PM	Complete	
14	RMCI, Inc.	00 00 00	No Spec	Gavel Underneath Electrical Pad	9/7/17 12:17 PM	9/7/17 3:20 PM	9/12/17 3:29 PM	Complete	
15	RMCI, Inc.	00 00 00	No Spec	Fencing and Gates	9/7/17 2:03 PM	9/11/17 9:45 PM	9/12/17 3:39 PM	Complete	
16	RMCI, Inc.	00 00 00	No Spec	Precast Vault Submittals	9/11/17 1:00 PM	9/13/17 7:50 AM	9/18/17 12:55 PM	Complete	
17	RMCI, Inc.	00 00 00	No Spec	Precast Vault Concrete Mix Design Submittals	9/11/17 1:00 PM	9/13/17 7:50 AM	9/14/17 12:24 PM	Complete	
18	RMCI, Inc.	00 00 00	No Spec	Pipe Coating	10/30/17 1:00 PM	11/1/17 9:00 AM	11/6/17 9:31 AM	Complete	
19	RMCI, Inc.	32 92 19	Seeding	Seed Certifications	11/17/17 10:00 AM	11/28/17 10:45 AM	11/28/17 3:30 PM	Complete	Resubmitted on 11/28/17
	RMCI, Inc.	31 00 00	Earthwork	Density Test Reports	As Completed	With Daily CQM Reports	With Daily CQM Reports	Complete	POST COMPLETION SUBMITTAL
	RMCI, Inc.	41 05 13	Pipelines, Liquid Process Piping	Hydrostatic Test Reports	As Completed	With Daily CQM Reports	With Daily CQM Reports	Complete	POST COMPLETION SUBMITTAL
	RMCI, Inc.	42 05 13	Pipelines, Liquid Process Piping	Pneumatic Test Reports	As Completed	With Daily CQM Reports	With Daily CQM Reports	Complete	POST COMPLETION SUBMITTAL
	RMCI, Inc.	43 05 13	Pipelines, Liquid Process Piping	Fusion Test Reports	As Completed	With Daily CQM Reports	With Daily CQM Reports	Complete	POST COMPLETION SUBMITTAL
	RMCI, Inc.	44 05 13	Pipelines, Liquid Process Piping	Fusion Welder Certifications	As Completed	With Daily CQM Reports	With Daily CQM Reports	Complete	POST COMPLETION SUBMITTAL
	RMCI, Inc.	00 00 00	No Spec	Concrete Test Reports	As Completed	With Daily CQM Reports	With Daily CQM Reports	Complete	POST COMPLETION SUBMITTAL
	RMCI, Inc.	00 00 00	No Spec	Electronic As-Builts	12/29/17 5:00 PM	12/29/17 5:00 PM			POST COMPLETION SUBMITTAL
	RMCI, Inc.	00 00 00	No Spec	Asphalt Mix Design					NOT NEEDED
	RMCI, Inc.	00 00 00	No Spec	Asphalt Test Reports					NOT NEEDED
	Wilson Electric	00 00 00	No Spec	Metering	8/7/17 3:30 PM	8/8/17 2:30 PM	8/14/17 11:58 AM	Complete	
	Wilson Electric	00 00 00	No Spec	MV Cable	8/7/17 3:30 PM	12/7/17 12:51 PM	12/7/17 1:43 PM	Complete	Resubmitted on 12/7/17
	Wilson Electric	00 00 00	No Spec	MV Terminations	8/7/17 3:30 PM	8/8/17 2:30 PM	8/14/17 11:44 AM	Complete	
	Wilson Electric	00 00 00	No Spec	Breaker/junction boxes	8/15/17 12:30 PM	8/16/17 11:00 AM	8/21/17 1:38 PM	Complete, with clarification	Wilson Electric Response: "The breakers in the Sentron Unit are what Siemens says are what are needed for adequate protection. They did say that the breakers can be changed out in the field with what is specified"
	Wilson Electric	00 00 00	No Spec	Transformer	8/15/17 12:30 PM	10/9/17 1:15 PM	10/10/17 2:54 PM	Complete	Resubmitted 10/9/17
	Wilson Electric	00 00 00	No Spec	Pull Boxes	8/16/17 5:07 PM	8/17/17 8:50 AM	8/24/17 12:04 PM	Complete	
	Wilson Electric	00 00 00	No Spec	Fiber Optic System	8/25/17 3:51 PM	9/6/17 2:30 PM	9/12/17 7:26 AM	Complete	
	Wilson Electric	00 00 00	No Spec	Pulling Plan					Identified at Preparatory Phase Meeting, instructed by USACE on 12-20-17 that a pulling plan would not be required as all of the runs were straight runs.
	Wilson Electric	00 00 00	No Spec	VLF Testing Certifications	As Completed	With Daily CQM Reports	With Daily CQM Reports	Complete	Identified at Preparatory Phase Meeting
8	Techsas, Inc.	00 00 00	No Spec	KAFB-106239 VFD	10/2/17 3:31 PM	11/21/17 9:05 AM	11/22/17 12:56 PM	Complete	10/10/17 15:33 USACE requested additional information requiring resubmittal
9	Techsas, Inc.	00 00 00	No Spec	PLC and Instrumentation	10/2/17 3:31 PM	10/13/17 9:30 AM	10/17/17 3:23 PM	Complete	
10	Techsas, Inc.	00 00 00	No Spec	Well Pump and Components	10/2/17 3:31 PM	10/31/17 12:00PM	10/6/17 9:49 AM	Complete	
11	Techsas, Inc.	00 00 00	No Spec	Recovery Well Vault Components	10/2/17 3:31 PM	10/13/17 9:30 AM	12/7/17 11:14 AM	Complete	Resubmitted on 12/05/17
	I&C Solutions			None					NOT NEEDED
	EA	00 00 00	No Spec	Existing Conveyance Line Drainage Plan	9/26/17 5:00 PM	9/27/17 3:27 PM	10/2/17 12:25 PM	Complete	
					--END OF LOG--				

DEPARTMENT OF THE ARMY
ALBUQUERQUE DISTRICT, CORPS OF ENGINEERS
ALBUQERQUE DISTRICT OFFICE
4101 JEFFERSON PLAZA NE
ALBUQUERQUE, NM 87109

SUBMITTAL REVIEW VERIFICATION SHEET

PROJECT TITLE: Kirtland BFF Mid-Plume Pump and Treat System Expansion
CONTRACT NUMBER: W912DR-12-D-0006 DM01
DATE RECEIVED: 7-21-2017
DATE REVIEWED: 7-25-2017

DESCRIPTION OF ITEMS REVIEWED:

1. HDPE Pipe and Fittings

NO EXCEPTIONS TAKEN.	X
EXCEPTIONS AS NOTED ON DRAWINGS AND/OR ATTACHED SHEETS(S). RESUBMISSION NOT REQUIRED.	
EXCEPTIONS AS NOTED ON DRAWINGS AND/OR ATTACHED SHEETS(S). RESUBMISSION REQUIRED.	
RECEIPT ACKKNOWLEDGED.	

Notes:

NOTE: ITEMS REVIEWED AS TO GENERAL LAYOUT ONLY. DIMENSIONS AND QUANTITIES NOT CHECKED. REVIEW DOES NOT RELIEVE CONTRACTOR OF RESPONSIBILITIES FOR ANY ERRORS WHICH MAY EXIST AS CONTRACTOR SHALL BE RESPONSIBLE FOR DIMENSIONS AND DESIGN OF ADEQUATE CORRECTIONS, DETAILS AND SATISFACTORY CONSTRUCTION OF WORK.

SIGNATURE SANCHEZ.AMY.ELIZABETH.1454434338 Digitally signed by SANCHEZ.AMY.ELIZABETH.1454434338 DN: c=US, o=U.S. Government, ou=DoD, ou=PKI, ou=USA, cn=SANCHEZ.AMY.ELIZABETH.1454434338 Date: 2017.07.25 08:17:21 -06'00' **DATE** 07/25/2017

EA Engineering, Science, and Technology, Inc., PBC

Submittal Review Sheet 1

Project Name: **Kirtland BFF Mid-Plume Pump and Treat System Expansion**				Date Received: **07/20/2017**	
Project Owner: **Kirtland Air Force Base**				Checked By: **Tyler Curley**	
Contractor: **RMCI, Inc.**	Engineer: **EA Engineering, Science and Technology, Inc., PBC.**			Log Page: **NA**	
Address: **6211 Chappell Rd NE, Albuquerque, NM 87113**	Address: **320 Gold Ave. SW, Suite 1300 Albuquerque, NM 87102**			EA No.: 62599DM01	
				Spec. Section: **40 05 13 - Pipelines Liquid Process Piping**	
				Drawing/Detail No.:	
ATTN: Philip Johnson	ATTN: **Devon Jercinovic**			1st Sub	Re-Sub
Date Transmitted: **07/20/2017**	Prev. Transmittal Date:				

Item No.	No. Copies	Description	Manufacturer	Mfg/Vendor Dwg or Detail	Action Taken*
1	1	HDPE Pipe and Fittings	Harrington Industrial Plastics LLC		**B**

The Action Designated Above is in Accordance with the Following Legend:

A – Furnish as Submitted
B – Furnish as Noted
C – Revise and Re-submit
1. Not enough information for review.
2. No reproducible submitted.
3. Copies illegible.
4. Not enough copies submitted.
5. Wrong sequence number.
6. Wrong resubmittal number.
7. Wrong Spec. Section.
8. Wrong form used.
9. See Comments.

D – Rejected
E – Engineer's Review not Required
1. Submittal not required.
2. Supplemental Information. Submittal retained for Information purposes only.
3. Information reviewed and approved on prior submittal.
4. See Comments.

Review is for general compliance with Contract Documents. No responsibility is assumed for correctness of dimensions or detail. Contractor is required to specify deviations from contract requirements. Lack of exceptions noted by Engineer does not waive Contractor's obligation to comply with Drawings and Specifications.

Comments:
Items reviewed and confirmed to meet requirements
(Reviewed Material in Parentheses)
Issues in Bold

- Piping material is PE 4710 for both the carrier and containment piping instead of PE 4710/3608 as specified. The pressure rating of the containment pipe is 125 psi when using PE 4710 compared to 100 psi of the specified PE 3608. Due to the higher pressure rating of the PE 4710 I feel this is an acceptable material. Spec sheet provided to RMCI by manufacturer is included and replaces the Spec sheet in the submittal (page 23 of the submittal).

EA Engineering, Science, and Technology, Inc., PBC

By: _____ Date: 7/21/17

Distribution: [1] Contractor [1] Engineer [1] Owner

Asahi/America, Inc.

SPECIFICATION FOR
FLUID-LOK HDPE DUAL CONTAINMENT PIPE

SECTION 1500 MECHANICAL

1. GENERAL

1.1.1 Summary

This specification shall govern the materials and installation of High Density Polyethylene dual contained system of pipe and structures. Materials identified in ASTM D-2657 shall be purchased and installed according to this specification. The general contractor shall be responsible for the overall operation of the complete system. The mechanical contractor shall be responsible for the acceptable condition of the containment piping. No deviation from this specification shall be allowed without express written consent of the engineer.

1.1.2 References

ASME B31.3 Hydrostatic Testing Guidelines

AWW C901-Polyethylene Pressure Pipe, Tubing and Fittings, ½" through 3" for Water
AWWA C906-Polyethylene (PE) Pressure Pipe and Fittings, 4" through 63" for Water Distribution.

ASTM F714-Polyethylene Plastic Pipe Based on Outside Diameter (3" to 63")

NSF Std #14-Plastic Piping Components & Related Materials

ASTM C-1147-Practice for Determining Short Term Tensile Weld Strength of Chemical Resistance

ASTM D-638-Test Method of Tensile Properties of Plastics

ASTM D-790-Test Method for Flexural Properties of Unreinforced and Reinforced Plastics and Electrical Insulating Materials

ASTM D-1238-Test Method for Flow Rates of Thermal Plastics by Extrusion Plastometer

ASTM D-1248-Specification for Polyethylene Plastics Molding and Extrusion Materials

ASTM F-1248-Determination of Environmental Stress Crack Resistance (ESCR) of Polyethylene Pipe

ASTM D-1505-Test Method for Density of Plastics by the Density Gradient Technique

ASTM D-1599-Test Method for Short Time Hydraulic Failure Pressure of Plastic Pipe, Tubing and Fittings

ASTM D-1693-Test Method for Environmental Stress Cracking of Ethylene Plastics

ASTM D-2122-Method for Determining Dimensions of Thermal Plastic Pipe and Fittings

ASTM D-2239-Polyethylene Plastic Pipe (SIDR-PR). (Iron Pipe Size; Inside Diameter)

ASTM D-2513- Specification for Thermoplastic Gas Pressure Pipe, Tubings and Fittings

ASTM D-2657-Guideline for Polyolefin Thermoplastic Butt Fusion Heat Welding

ASTM D-2737-Polyethylene Plastic Tubing (Copper Tube Size; Outside Diameter)

ASTM D-2837- Method for Obtaining Hydrostatic Design Basis for Thermal Plastic Pipe Materials

ASTM D-3035-Polyethylene (PE) Plastic (DR-PR) Based on Controlled Outside Diameter (1/2" to 24")

ASTM D-3350-Specification for Polyethylene Plastics Pipe and Fittings Material

ASTM D-4218-Test Method for Carbon Black Content in Polyethylene Compounds by the Muffle-Furnace Technique
Plastic Piping Institute Best Practices TR 31/9-79

1.1.3 Definitions

Product pipe = Inside pipe or carrier pipe
Containment Pipe – Outer pipe

1.1.4 System Description

A. System shall be a double-containment piping system produced on High Density Polyethylene on both the product and containment pipe.
B. System shall provide the ability to incorporate leak detection as specified within the Leak Detection Section. Access tees, pull ropes and low-point instrumentation taps shall be provided as specified by leak detection vendor or contract drawings.
C. System shall provide full containment of all accessories such as floor drains, cleanouts, valves and tanks, etc.

1.2 System Performance Requirements

System shall handle the following:

Description	Product Pipe	Containment Pipe
Operation Pressure		
Operating Temperature		
Test Pressure		
Media concentration		

1.2.1 Submittals

Submit the following:

A. Product data for each type of double containment specified including details of construction relative to materials, dimensions of individual components, profiles and finishes.
B. Product certificates signed by manufacturer of double containment product stating compliance with stated requirements.
C. Welder certificates certifying that welders comply with the installation procedures as outlined by ASTM D 2657 Section 9 prior to construction.
D. Qualifications of firms supplying double containment piping. Firms must have a minimum of 10 years experience in the design, installation and operation of a thermoplastic double-wall piping system.

1.2.2 Quality Assurance

A. Obtain components from a single source having responsibility and accountability to answer and resolve problems regarding proper installation, compatibility, performance and acceptance.
B. Design, fabricate and install double-containment piping to meet ASME/ANSI B31.3 where applicable manufacturer shall provide thermal stress analysis demonstrating the ability of the double-containment piping system to handle the stated piping conditions with a restrained or a flexible design, as follows:

1. **Restrained Design**
   The system shall be restrained with no accommodation for inner-pipe movement. Location of anchors shall be responsibility of manufacturer.

2. **Flexible Design**
   The system shall be a flexible design with provisions to allow inner and outer pipe ability to move independent of one another. Anchors will be selectively used to direct thermal expansion into expansion loops, offsets, etc. Size, location and quantity of expansion loops, etc., shall be responsibility of manufacturer.

1.2.3 Delivery, Storage and Handling

A. Deliver double-containment piping as a factory assembled unit with protective wrapping/coverings.

B. Store products on elevated platforms in a dry location with protection from elements.
C. Lift, support and transport double-containment piping per manufacturer's recommendations.

1.2.4 Warranty
Warranty period is one year after date of substantial completion of installation.

1.2.5 Extra Materials
Turn over to owner at end of construction necessary welding equipment as suggested by manufacturer for repair and maintenance of the double-containment product.

PART 2. PRODUCTS

2.1 Manufacturers
Subject to the compliance with requirements and products that may be incorporated into the work include Fluid-Lok by Asahi/America, Inc. of Malden, Massachusetts 1-800-343-3618.

2.2 Materials
A. PIPE AND FITTINGS

The pipe used to fabricate the system supplied under this specification shall be high density, extra high molecular weight polyethylene pipe. The pipe and fittings shall conform to ASTM D-3350 with minimum cell classification values of 345464C. The pipe and fittings shall be made from the same polyethylene resin base which meets this specification.

B. PHYSICAL PROPERTIES OF PIPE COMPOUND

Density – the density shall be no less than 0.955 gms/ccm as referenced in ASTM D1505.

Melt Index-the melt index shall be no greater than 0.15 gms/10 minutes when tested in accordance with ASTM D 1238.

Flex Modulus-flexural modulus shall be 135,000 psi as referenced in ASTM D638.

Tensile Strength at yield-tensile strength shall be 3,200 to less than 3,500 psi as referenced in ASTM D638.

ESCR-Environmental Stress Crack Resistance shall be in excess of 5,000 hours with zero failures when tested in accordance with ASTM D 1693-Condition C.

Hydrostatic Design Basis shall be 1,600 psi at 23 degrees C when tested in accordance with ASTM D2837.

Tested according to ASTM F 1248, ring specimen ESCR is zero failures in more than 1,000 hours.

No slow-crack growth pipe ring failures in more than 32 days of testing at 1,600 psi, cycled at 9 RPMs according to Battelle Rotary Test.

The HDPE pipe extruder and resin manufacturer shall be the same company. Third party testing data may be required by the engineer to certify the manufacturer's material data.

Chemical resistance date from the pipe manufacturer on the application will be provided as part of the submittal. The engineer may require a certification letter from the manufacturer as part of the submittal.

C. PIPE DIMENSIONS AND SDR

Pipe supplied under this specification shall have IPS (Iron Pipe Size) OD and shall meet ASTM D 3035. Pipe sizes shall be as specified in the following table. The dual containment combination, inner by outer pipe, the ID and OD of the carrier and containment, and the SDRs shall be as specified herein.

Pipe Size	Carrier ID	Carrier OD	Carrier SDR	Cont ID	Cont OD	Const SDR

Fittings shall be manufactured to the same IPS ID and OD as the pipe.

All molded and fabricated fittings shall meet the pressure requirements of the system as specified and based on ASTM D2837 Hydrostatic Design Basis for Thermoplastic Pipes.

All molded fittings shall be manufactured per ASTM D3261.

Pipe joints and fittings shall be supplied to the job site ready for simultaneous butt-fusion.

Cleanouts shall be installed every 600 feet or as per the drawings. Cleanouts shall be capped with metallic blind flanges and a full blind gasket (to prevent condensation on the inside of the metal blind) for easy access. (Alternate: Position cleanouts in leak detection manholes, valve boxes or well heads).

Carrier pipe support shall be with full round centralizers welded to the carrier pipe. Centralizer support spacing per Plastic Piping Institute standards and manufacturer's recommendations.

The centralizers shall be machined for accuracy from pipe grade resin ½" sheet stock HDPE. Centralizers have openings at 6 o'clock and 12 o'clock per the drawings. The opening at 6 o'clock will permit the flow of liquid between the carrier pipe and the containment pipe. Then minimum vertical opening shall be .75 inches or greater including allowance for internal beads. The minimum horizontal opening shall be 1.25 inches. The opening at 12 o'clock shall be the same dimensions.

The OD of the centralizer shall match the ID of the containment piping as closely as possible.

All pipe and fittings with a carrier pipe diameter of 8" or larger and all piping with a carrier pipe of 6" DR 11 or lower DR (thicker wall) shall have the centralizers extrusion welded to the carrier pipe based on the specified support spacing above. End centralizers shall be extrusion welded to the carrier pipe and the containment piping at the ends of all pipe and fittings.

The pipe and fitting manufacturer shall provide documentation that the fabricator/welders have a minimum of 2 years experience fabricating dual containment systems and shall show compliance with ASTM C 1147.

Force Transfer Dogbones™ shall be used to anchor the differential and the total forces from thermal expansion / contraction. The Force Transfer Dogbone™ shall be a mass anchor machined from solid high density polyethylene pipe grade resin. The coupling shall anchor the inner carrier pipe and the outer containment pipe to an external anchor point. Force Transfer Dogbones™ shall be used to protect fittings from thermal expansion as required by the manufacturer's thermal analysis of the system based on the standards outlined in this specification.

Force Transfer Dogbones™ shall simultaneously fused into the system.

Solid Force Transfer Dogbones™ shall be used to segment the annular space as required and drawn.

Force Transfer Dogbones™ shall be ported unless indicated on the drawings. Ports shall provide a continuous annular space and match the openings in the centralizers. POSITION PORTS PROPERLY DURING INSTALLATION.

End termination/Force Transfer Dogbones™ shall be used to seal the system at both ends. The coupling shall be simultaneously butt fused to the carrier and containment pipe to seal the annular space. No other closure or termination will be allowed. This fitting will also provide the transition to single wall piping.

Tie-ins to other piping systems and/or equipment where butt-fusion is not applicable shall be with HDPE flange adapters and coated metal back-up rings, unless otherwise specified by the engineer on the drawings. Mechanical compression or clamp style fittings will not be allowed under this specification.

PART 3. EXECUTION

3.1 Installation

A. Install double-containment piping to comply with manufacturer's recommended procedures.
B. Installers shall be pre-qualified through sufficient training in butt fusion techniques according to ASTM D2657 Section 9.
C. Hot gas welding shall not be allowed for wetted components.
D. Manufacturer/Manufacturer's Representative shall provide on-site training in the assembly, installation and operation of double-containment systems.
E. Install continuous running pull rope for installation of leak detection cable if required. Manufacturer shall supply pipe spools with pull rope in place.

3.2 Testing

Pressure Systems

Testing shall be conducted in accordance with manufacturer's recommendations. The owner shall be notified at the time of test and choose to be present.

A. Product Pipe
Should be tested hydrostatically to 150% of operating pressure per ASME B31.3 part 345 or per local code.

B. Containment Pipe
The containment piping shall be hydrostatically tested to 150% of operating pressure per ASME B31.3 or per local codes. The product pipe must be pressurized to the same pressure as the test to prevent collapsing of product pipe.

Alternate to containment pipe hydrostatic test.

To avoid moisture in the containment space, an air test can be conducted on the containment pipe. Pressure test is recommended at 5 psi and shall not exceed 10 psi. The inner carrier shall be full of water and under pressure to avoid any possible collapse.

When testing with air, the ambient temperature should be above 32°F and extra safety precautions for personnel shall be put in place during the test.

Drainage Systems

C. Product Pipe
Product pipe shall be tested to 10 feet of H_2O or less. Compressed air or gas may be used at 10 psi where conditions warrant at temperatures above 45°F. Systems with elevation changes greater than 20 feet of H_2O shall be tested at 1-1/2 times the elevation head. Fabricated fittings shall not be used for these systems; pressure fittings should be used in their place.

D. Containment Pipe
Containment pipe should be tested per 3.2.C. Compressed air/gas shall be used for systems where electronic leak detection shall be used to prevent contamination of the annular space with moisture. In no case shall a test pressure of greater than 10 psi of compressed gas/air be allowed. Ambient temperature shall be above 32°F when using air/gas for testing.

Simultaneous Pipe

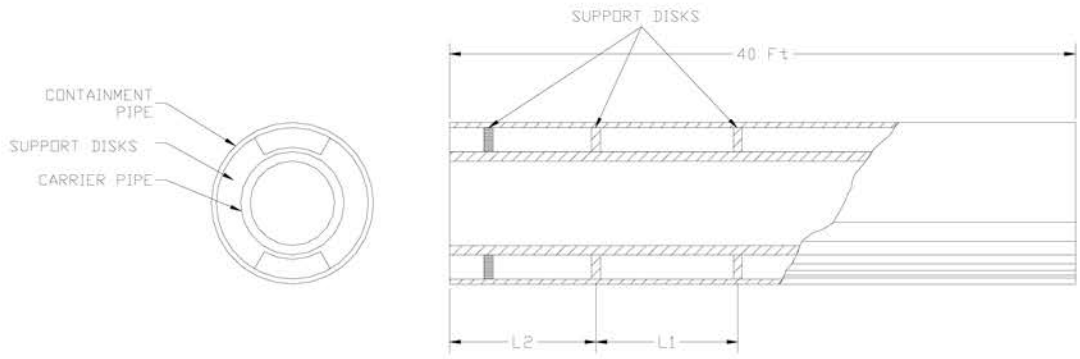

SDR Rating	11 x 11	11 x 17	11 x 26	17 x 26	26 x 26	26 x 32.5
Part Number	4001	4002	4085	4005	4695	4977

Size	Standard SDR	Size Code	L1	L2
1" x 3"	11 x 11	134	34.25	35.25
1" x 4"	11 x 17	401	34.25	35.25
1.5" x 4"	11 x 17	415	34.25	35.25
2" x 4"	11 x 17	420	37.0	38.0
2" x 6"	11 x 17	530	37.0	38.0
3" x 6"	11 x 17	531	48.0	49.0
	11 x 26		48.0	49.0
	17 x 26		43.75	44.75
4" x 8"	11 x 17	583	53.25	54.25
	11 x 26		53.25	54.25
	17 x 26		48.0	49.0
6" x 10"	11 x 17	627	60.0	61.0
	17 x 26		60.0	61.0
	26 x 26		53.25	54.25
8" x 12"	17 x 26	660	68.5	69.5
	26 x 32.5		60.0	61.0
10" x 14"	17 x 26	702	68.5	69.5
12" x 16"	26 x 26	690	80.0	81.0
12" x 18"	17 x 26	711	80.0	81.0

in inches
More sizes and SDRs available

Asahi America Inc. 35 Green St Malden Ma 02148 Office 1-781-321-5409 Fax 1-781-321-4421
Email: asahi@asahi-america.com
Internet: www.asahi-america.com

22.5° Elbow
Part Number + Size Code

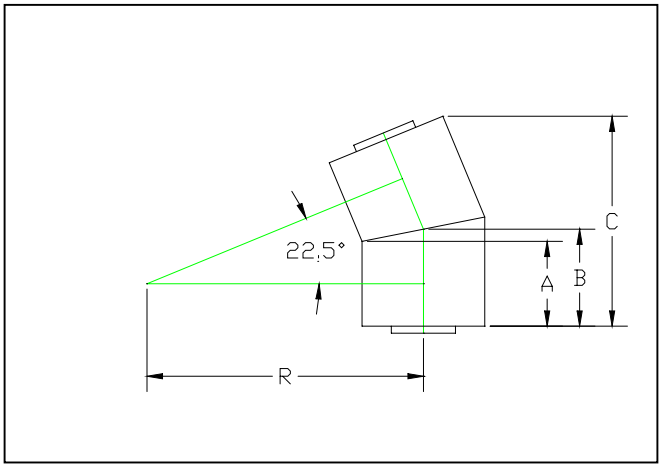

SDR RATING	11 x 11	11 x 17	11 x 26	17 x 26	26 x 26	26 x 32.5
PART # Number	4957	4958	4959	4960	4961	4981

SIZE	Standard SDR	Size Code	A	B	C	R
1” x 3”	11 x 11	134	3.0”	3.5”	7.4”	7.4
1” x 4” 1.5” x 4” 2” x 4”	11 x 17	401 415 420	5.0”	5.6”	11.6”	11.6”
2” x 6”	11 x 17	530	6.0”	6.9”	14.5”	14.5”
3” x 6”	11 x 17 11 x 26 17 x 26	531	6.0”	6.9”	14.5”	14.5”
4” x 8”	11 x 17 11 x 26 17 x 26	583	6.0”	7.1”	15.5”	15.5”
6” x 10”	11 x 17 17 x 26 26 x 26	627	6.0”	7.4”	16.6”	16.6”
8” x 12”	17 x 26 26 x 32.5	660	8.0”	9.7”	21.3”	21.3”
10” x 14”	17 x 26	702	8.0”	9.9”	22.0”	22.0”
12” x 16”	26 x 26	690	10.0”	12.1”	26.7”	26.7”

Asahi America Inc. 35 Green St Malden Ma 02148 Office 1-781-321-5409 Fax 1-781-321-4421
Email: asahi@asahi-america.com
Internet: www.asahi-america.com

45° Elbow
Part Number + Size Code

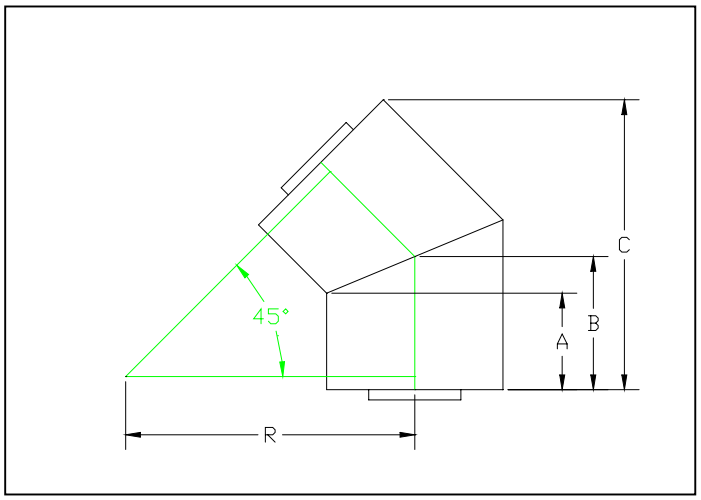

SDR RATING	11 x 11	11 x 17	11 x 26	17 x 26	26 x 26	26 x 32.5
PART # Number	4021	4022	4025	4026	4027	4693

SIZE	Standard SDR	Size code	A	B	C	R
1” x 3”	11 x 11	134	C.F.	C.F.	C.F.	C.F.
1” x 4” 1.5” x 4” 2” x 4”	11 x 17	401 415 420	4.7”	5.0”	10.13”	10.13”
2” x 6”	11 x 17	530	5.13”	6.5”	13.44”	13.44”
3” x 6”	11 x 17 11 x 26 17 x 26	531	5.13”	6.5”	13.44”	13.44”
4” x 8”	11 x 17 11 x 26 17 x 26	583	4.71”	6.5”	14.14”	14.14”
6” x 10”	11 x 17 26 x 26 17 x 26	627	5.77”	8.0”	17.46”	17.46”
8” x 12”	17 x 26 26 x 32.5	660	5.86”	8.5”	19.02”	19.02”
10” x 14”	17 x 26	702	C.F.	C.F.	C.F.	C.F.
12” x 16”	26 x 26	690	C.F.	C.F.	C.F.	C.F.
12” x 18”	17 x 26	711	C.F.	C.F.	C.F.	C.F.

45° Lateral
Part Number + Size Code

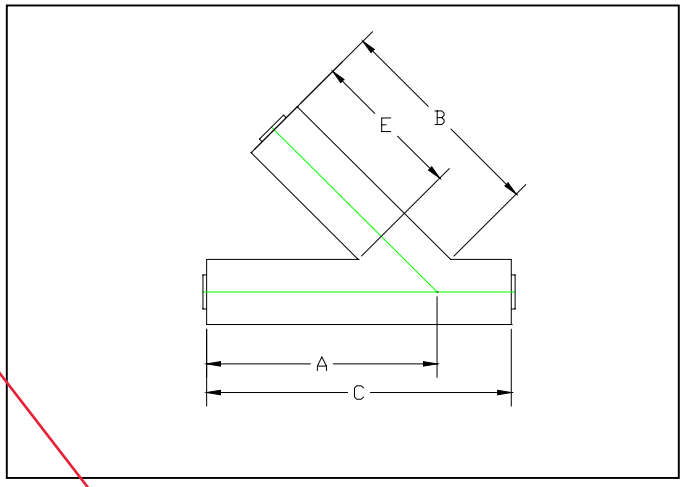

SDR RATING	11 x 17	11 x 26	17 x 26	26 x 26	26 x 32.5
PART # Number	4047	4087	4048	4052	4053

SIZE	Standard SDR	Size code	A	B	C	E	Gusset Thickness
2” x 4”	11 x 17	420	19.5”	19.5”	26.5”	14.1”	N/R
2” x 6”	11 x 17	530	27.6”	27.9”	35.5”	19.9”	N/R
3” x 6”	11 x 17 11 x 26 17 x 26	531	27.6”	27.9”	35.5”	19.9”	N/R
4” x 8”	11 x 17 11 x 26 17 x 26	583	30.4”	30.4”	40.2”	20.0”	N/R
6” x 10”	11 x 17 17 x 26 26 x 26	627	40.3”	35.0”	50.5”	20.0”	1.0”
8” x 12”	17 x 26 26 x 23.5	660	44.0”	35.4”	54.6”	20.0”	1.0”
10” x 14”	17 x 26	702	47.3”	38.9”	58.2”	22.0”	1.0”
12” x 16”	26 x 26	690	55.3”	45.3”	66.0”	26.0”	1.0”
12” x 18”	17 x 26	711	59.5”	49.7”	71.2”	28.0”	1.5”

90° Elbow
Part Number + Size Code

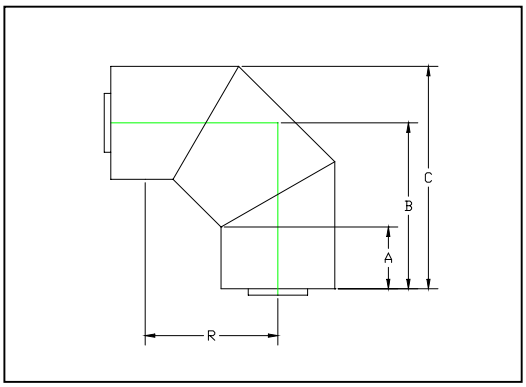

SDR RATING	11 x 11	11 x 17	11 x 26	17 x 26	26 x 26	26 x 32.5
PART # Number	4011	4012	4015	4016	4017	4974

SIZE	Standard SDR	Size code	A	B	C	R
1” x 3”	11 x 11	134	C.F.	C.F.	C.F.	C.F.
1” x 4” 1.5” x 4” 2” x 4”	11 x 17	401 415 420	4.07”	8.54”	10.79”	6.5”
2” x 6”	11 x 17	530	5.13”	11.45”	14.76”	8.9”
3” x 6”	11 x 17 11 x 26 17 x 26	531	5.13”	11.45”	14.76”	8.9”
4” x 8”	11 x 17 11 x 26 17 x 26	583	4.71”	12.66	16.97”	10.05”
6” x 10”	11 x 17 17 x 26 26 x 26	627	5.77”	14.72”	20.09”	11.93”
8” x 12”	17 x 26 26 x 32.5	660	5.86”	15.92	22.3”	13.0”
10” x 14”	17 x 26	702	C.F.	C.F.	C.F.	C.F.
12” x 16”	26 x 26	690	C.F.	C.F.	C.F.	C.F.
12” x 18”	17 x 26	711	C.F.	C.F.	C.F.	C.F.

Access Port with Flange
Part Number + Size Code

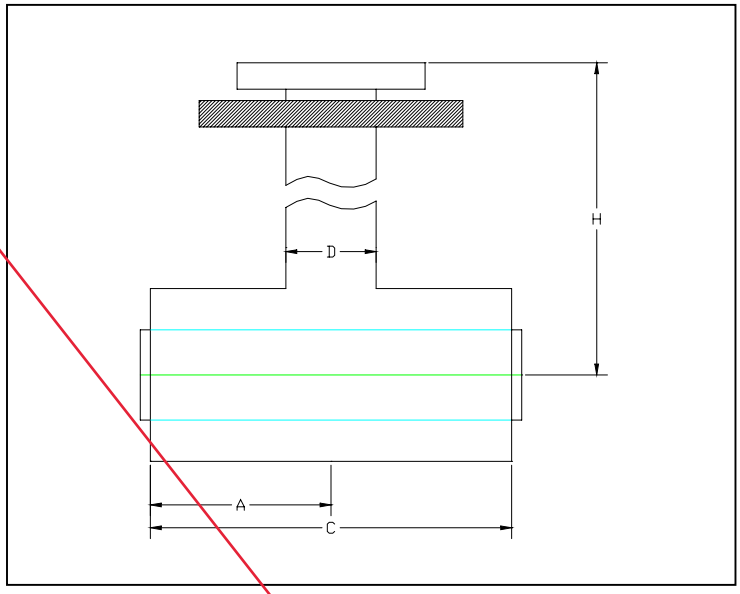

SDR RATING	11 x 11	11 x 17	11 x 26	11 x 32.5	17 x 17	17 x 26	17 x 32.5	26 x 26	26 x 32.5	32 x32
PART # Number	4916	4917			4918					

SIZE	Size code	A	C	D	H
1” x 4”	401	6.0”	12.0”	4.5”	Varies
2” x 6” 3” x 6”	530 531	9.0”	18.0”	4.5”	Varies
3” x 8” 4” x 8”	582 583	9.0”	18.0”	4.5”	Varies
6” x 10”	627	9.0”	18.0”	4.5”	Varies
8” x 12”	660	9.0”	18.0”	4.5”	Varies

Asahi America Inc. 35 Green St Malden Ma 02148 Office 1-781-321-5409 Fax 1-781-321-4421
Email: asahi@asahi-america.com
Internet: www.asahi-america.com

Dogbone End Termination

Part Number + Size Code

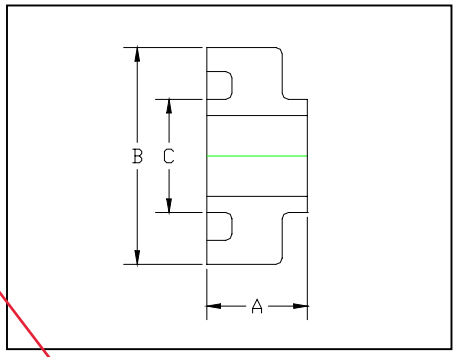

SDR RATING	11 x 11	11 x 17	11 x 26	17 x 26	26 x 26	26 x 32.5
PART # Number	4940	4941	4938	4939	4947	4948

SIZE (SDRxSDR)	Size code	A	B	C
1” x 3” (11 x 11)	134	2.5”	3.5”	1.315”
1” x 4” (11 x 17)	401	2.5”	4.5”	1.315”
1.5” x 4” (11 x 17)	415	2.5”	4.5”	1.9”
2” x 4” (11 x 17)	420	2.5”	4.5”	2.375”
2” x 6” (11 x 17)	530	3.0”	6.625”	2.375”
3” x 6” (11 x 17)	531	3.0”	6.625”	3.5”
3” x 6” (11 x 26)	531	3.0”	6.625”	3.5”
3” x 6” (17 x 26)	531	3.0”	6.625”	3.5”
4” x 8” (11 x 17)	583	4.0”	8.625“	4.5”
4” x 8” (11 x 26)	583	3.0”	8.625”	4.5”
4” x 8” (17 x 26)	583	3.0”	8.625”	4.5”
6” x 10” (11 x 17)	627	4.0”	10.75”	6.625”
6” x 10” (17 x 26)	627	3.0”	10.75”	6.625”
6” x 10” (26 x 26)	627	3.0”	10.75”	6.625”
8” x 12” (17 x 26)	660	4.0”	12.75”	8.625”
8” x 12” (26 x 32)	660	3.0”	12.75”	8.625”
10” x 14” (17 x 26)	702	4.0”	14.0”	10.75”
10” x 16” (17 x 26)	633	4.0”	16.0”	10.75”
10” x 16” (26 x 26)	633	4.0”	16.0”	10.75”
12” x 16” (26 x 26)	690	4.0”	16.0”	12.75”
12” x 18” (17 x 26)	711	4.0”	18.0”	12.75”

Fabricated Tee

Part Number + Size Code

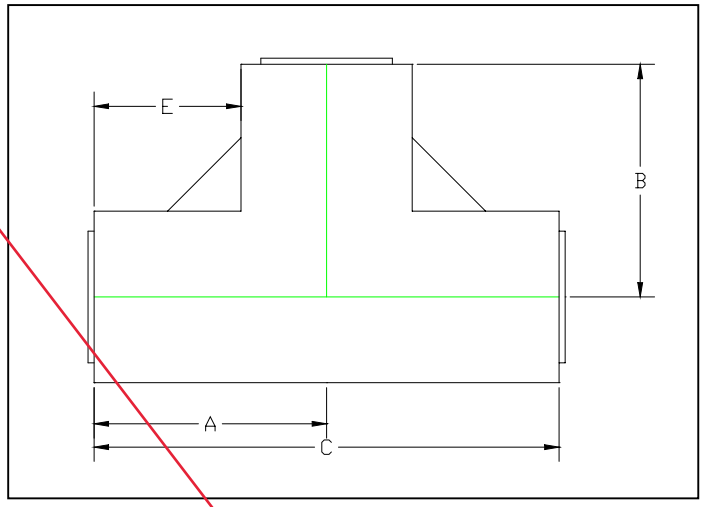

SDR RATING	11 x 17	11 x 26	17 x 26	26 x 26	26 x 32.5
PART # Number					

SIZE	Standard SDR	Size code	A	B	C	E
6” x 10”	11 x 17 17 x 26 26 x 26	627	13.5”	16”	27.5”	8.1”
8” x 12”	17 x 26 26 x 32.5	660	24.0”	24.0”	48.0”	17.6”
10” x 14”	17 x 26	702	24.0”	24.0”	48.0”	17.0”
12” x 16”	26 x 26	690	24.0”	24.0”	48.0”	16.0”
12” x 18”	17 x 26	711	24.0”	24.0”	48.0”	15.0”

Asahi America Inc. 35 Green St Malden Ma 02148 Office 1-781-321-5409 Fax 1-781-321-4421
Email: asahi@asahi-america.com
Internet: www.asahi-america.com

Long Sweep 45° Elbow

Part Number + Size Code

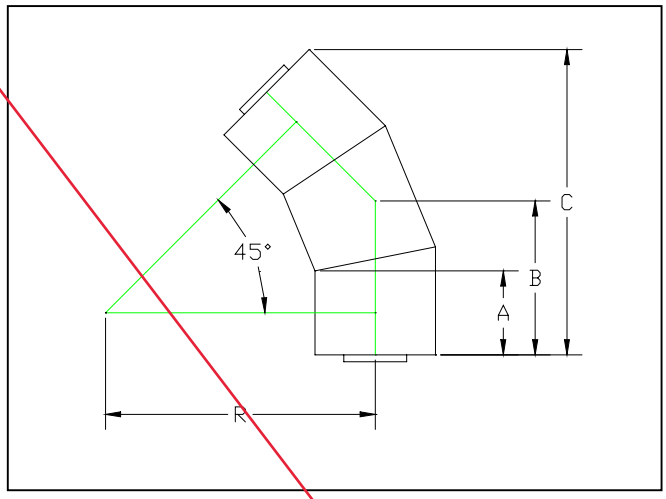

SDR RATING	11 x 11	11 x 17	11 x 26	11 x 32.5	17 x 17	17 x 26	17 x 32.5	26 x 26	26 x 32.5	32 x32
PART # Number	4121	4022	4025	4028	4029	4026	4023	4027	4056	4024

SIZE	Size code	A	B	C	R
1” x 3”	134	3.0”	5.4”	10.4”	9.3”
1” x 4” 1.5” x 4” 2” x 4”	401 415 420	5.0”	8.5”	16.1”	14.2”
2” x 6” 3” x 6”	530 531	6.0”	10.6”	20.5”	18.4”
3” x 8” 4” x 8”	582 583	6.0”	11.0”	21.9”	19.4”
6” x 10”	627	6.0”	11.5”	23.4”	20.4”
8” x 12”	660	8.0”	15.0”	30.0”	26.5”
10” x 14”	702	8.0”	15.3”	30.9”	27.1”
10” x 16” 12” x 16”	633 690	10.0”	18.7”	37.6”	33.1”
12” x 18”	711	10.0”	19.1”	39.0”	34.1”
14” x 20”	717	11.0”	21.1”	43.1”	37.7”
16” x 22”	735	11.0”	21.5”	44.5”	38.7”
18” x 24”	738	11.0”	21.9”	45.9”	39.7”
20” x 28”	785	10.0”	21.2”	46.1”	39.0”
22” x 30”	789	10.0”	21.6”	47.9”	40.1”
24” x 32”	793	10.0”	22.1”	48.9”	41.1”

Asahi America Inc. 35 Green St Malden Ma 02148 Office 1-781-321-5409 Fax 1-781-321-4421
Email: asahi@asahi-america.com
Internet: www.asahi-america.com

Long Sweep
60° Elbow
Part Number + Size Code

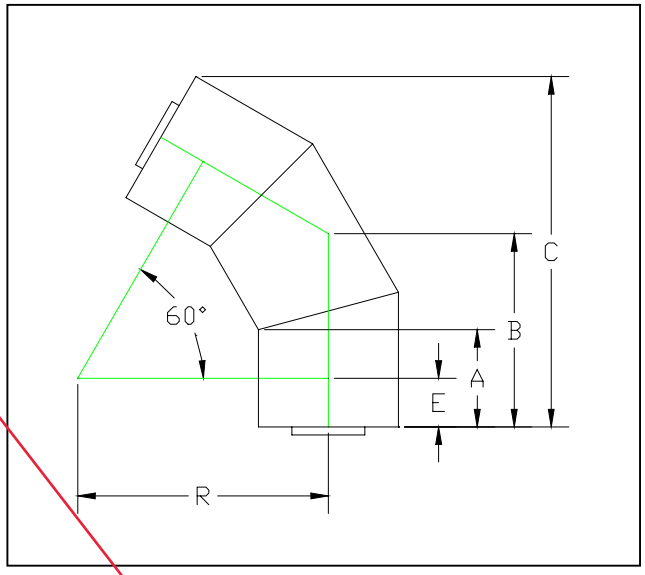

SDR RATING	11 x 11	11 x 17	11 x 26	11 x 32.5	17 x 17	17 x 26	17 x 32.5	26 x 26	26 x 32.5	32 x32
PART # Number	4121	4022	4025	4028	4029	4026	4023	4027	4056	4024

SIZE	Size code	A	B	C	E	R
1” x 3”	134	3.0”	5.4”	10.4”	1.5”	9.3”
1” x 4” 1.5” x 4” 2” x 4”	401 415 420	5.0”	8.5”	16.1”	2.5”	14.2”
2” x 6” 3” x 6”	530 531	6.0”	10.6”	20.5”	3.0”	18.4”
3” x 8” 4” x 8”	582 583	6.0”	11.0”	21.9”	3.0”	19.4”
6” x 10”	627	6.0”	11.5”	23.4”	3.0”	20.4”
8” x 12”	660	8.0”	15.0”	30.0”	4.0”	26.5”
10” x 14”	702	8.0”	15.3”	30.9”	4.0”	27.1”
10” x 16” 12” x 16”	633 690	10.0”	18.7”	37.6”	5.0”	33.1”
12” x 18”	711	10.0”	19.1”	39.0”	5.0”	34.1”
14” x 20”	717	11.0”	21.1”	43.1”	5.5”	37.7”
16” x 22”	735	11.0”	21.5”	44.5”	5.5”	38.7”
18” x 24”	738	11.0”	21.9”	45.9”	5.5”	39.7”
20” x 28”	785	10.0”	21.2”	46.1”	5.0”	39.0”
22” x 30”	789	10.0”	21.6”	47.9”	5.0”	40.1”
24” x 32”	793	10.0”	22.1”	48.9”	5.0”	41.1”

Long Sweep
90° Elbow

Part Number + Size Code

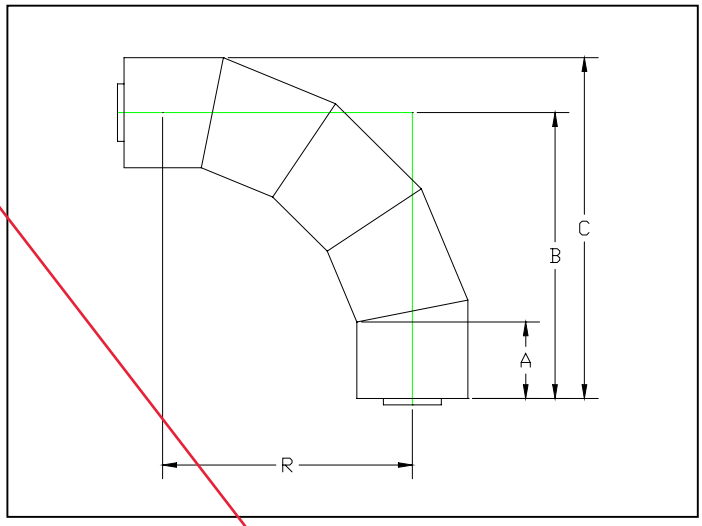

SDR RATING	11 x 11	11 x 17	11 x 26	11 x 32.5	17 x 17	17 x 26	17 x 32.5	26 x 26	26 x 32.5	32 x32
PART # Number										

SIZE	Size code	A	B	C	R
1” x 3”	134	3.0”	10.8”	12.5”	9.3”
1” x 4” 1.5” x 4” 2” x 4”	401 415 420	5.0”	16.8”	19.1”	14.2
2” x 6” 3” x 6”	530 531	6.0”	21.4”	24.7”	18.3”
3” x 8” 4” x 8”	582 583	6.0”	22.4”	26.7”	19.4”
6” x 10”	627	6.0”	23.5”	28.8”	20.1”
8” x 12”	660	8.0”	30.5”	36.8”	26.5”
10” x 14”	702	8.0”	31.0”	38.0”	27.1”
10” x 16” 12” x 16”	633 690	10.0”	38.1”	46.1”	33.1”
12” x 18”	711	10.0”	39.1”	48.1”	34.1”
14” x 20”	717	11.0”	43.2”	53.2”	37.7”
16” x 22”	735	11.0”	44.2”	55.2”	38.7”
18” x 24”	738	11.0”	45.2”	57.2”	39.7”
20” x 28”	785	10.0”	44.1”	58.1”	39.0”
22” x 30”	789	10.0”	45.1”	60.1”	40.1”
24” x 32”	793	10.0”	46.1”	62.1”	41.1”

Tee

Part Number + Size Code

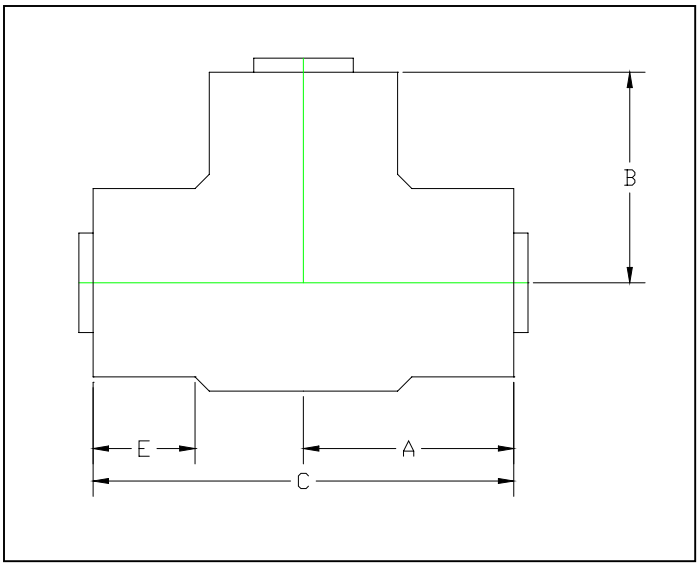

SDR RATING	11 x 11	11 x 17	11 x 26
PART # Number	4031	4032	4091

SIZE	Size code	A	B	C	E
1” x 3”	134	5.9”	5.6”	11.8”	3.0”
1” x 4” 1.5” x 4” 2” x 4”	401 415 420	6.7”	5.6”	13.9”	3.0”
2” x 6” 3” x 6”	530 531	8.9”	7.8”	17.8”	3.75”
4” x 8”	583	11.8”	9.5”	23.6”	4.0”

Asahi America Inc. 35 Green St Malden Ma 02148 Office 1-781-321-5409 Fax 1-781-321-4421
Email: asahi@asahi-america.com
Internet: www.asahi-america.com

P-Trap

Part Number + Size Code

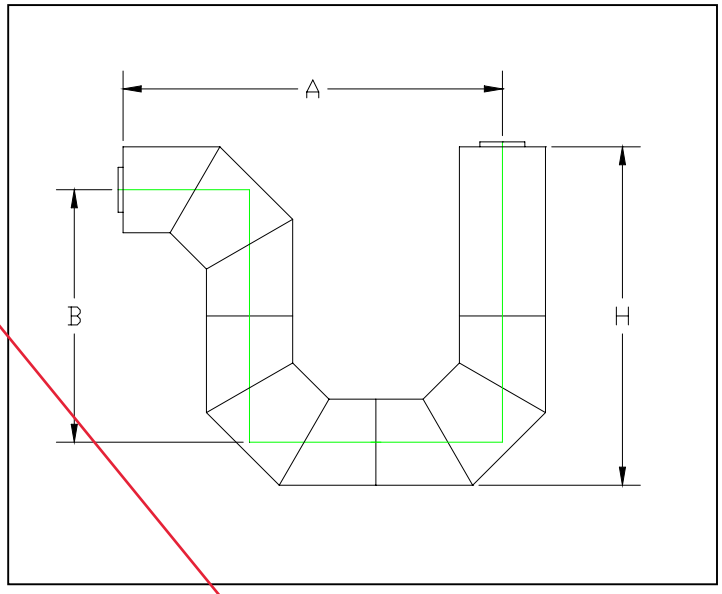

SDR RATING	11 x 11	11 x 17	11 x 26	11 x 32.5	17 x 17	17 x 26	17 x 32.5	26 x 26	26 x 32.5	32 x32
PART # Number	4901	4902	4097	4903	4904	4975	4905	4949	4950	4906

SIZE	Size code	A	B	H
1” x 3”	(134)	15.39”	10.26”	13.76”
1” x 4” 1.5” x 4” 2” x 4”	(401) (415) (420)	25.62”	17.08”	21.58”
2” x 6” 3” x 6”	(530) (531)	34.35”	22.90”	29.52”
3” x 8” 4” x 8”	(582) (583)	37.98”	25.32”	33.94”
6” x 10”	(627)	44.16”	29.44”	40.18”

Asahi America Inc. 35 Green St Malden Ma 02148 Office 1-781-321-5409 Fax 1-781-321-4421
Email: asahi@asahi-america.com
Internet: www.asahi-america.com

Reducers

Part Number + Size Code

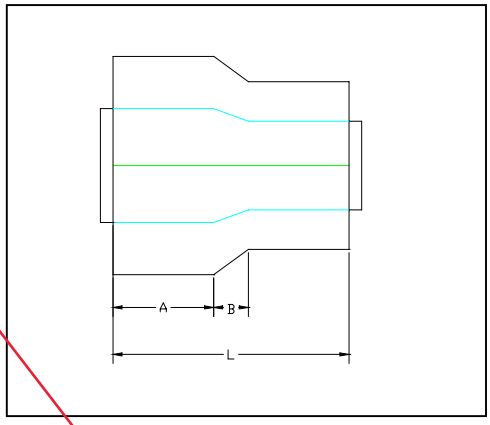

SDR RATING	11 x 11	11 x 17	11 x 26	11 x 32.5	17 x 17	17 x 26	17 x 32.5	26 x 26	26 x 32.5	32 x32
PART # Number	4071	4072	4096	4073						4074

SIZE	Size code	A	B	L
1” x 4” to 1” x 3” 1.5” x 4” to 1” x 3” 2” x 4” to 1” x 3”		3.13”	2.38”	8.62”
2” x 6” to 1” x 3” 3” x 6” to 1” x 3”		5.12”	2.36”	11.42”
2” x 6” to 1” x 4” 2” x 6” to 1.5” x 4” 2” x 6” to 2” x 4” 3” x 6” to 1” x 4” 3” x 6” to 1.5” x 4” 3” x 6” to 2” x 4”		3.0”	1.875	7.5”
4” x 8” to 2” x 6” 4” x 8” to 3” x 6”		4.0”	1.38”	9.38”
6” x 10” to 4” x 8” 8” x 12” to 4” x 8”		6.0”	4.0”	16.0”
8” x 12” to 6” x 10”		6.0”	4.0”	16.0”
10” x 14” to 8” x 12”		7.0”	4.0”	16.0”
10” x 16” to 10” x 14” 12” x 16” to 10” x 14”		7.0”	4.0”	18.0”
12” x 18” to 10” x 16” 12” x 18” to 12” x 16”		7.0”	4.0”	18.0”

Restraint Dogbone
Part Number + Size Code

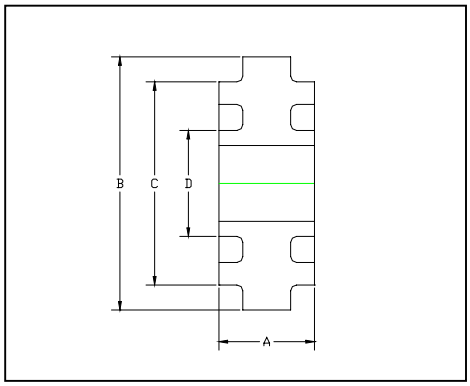

SDR RATING	11 x 11	11 x 17	11 x 26	11 x 32.5	17 x 17	17 x 26	17 x 32.5	26 x 26	26 x 32.5	32 x32
PART # Number	4951	4952	4953			4954		4955	4956	

SIZE (SDRxSDR)	Size code	A	B	C	D
1” x 3” (11 x 11)	134	2.5”	6.0”	3.5”	1.315”
1” x 4” (11 x 17)	401	2.5”	6.625”	4.5”	1.315”
1.5” x 4” (11 x 17)	415	2.5”	6.625”	4.5”	1.9”
2” x 4” (11 x 17)	420	2.5”	6.625”	4.5”	2.375”
2” x 6” (11 x 17)	530	3.0”	8.625”	6.625”	2.375”
3” x 6” (11 x 17)	531	3.0”	8.625”	6.625”	3.5”
3” x 6” (11 x 26)	531	3.0”	8.625”	6.625”	3.5”
3” x 8” (11 x 17)	582	4.0”	10.75”	8.625”	3.5”
4” x 8” (11 x 17)	583	4.0”	10.75”	8.625“	4.5”
4” x 8” (11 x 26)	583	3.0”	10.75”	8.625”	4.5”
4” x 8” (17 x 26)	583	3.0”	10.75”	8.625”	4.5”
6” x 10” (11 x 17)	627	4.0”	12.75”	10.75”	6.625”
6” x 10” (17 x 26)	627	3.0”	12.75”	10.75”	6.625”
6” x 10” (26 x 26)	627	3.0”	12.75”	10.75”	6.625”
8” x 12” (17 x 26)	660	4.0”	15.0”	12.75”	8.625”
8” x 12” (26 x 32)	660	3.0”	15.0”	12.75”	8.625”
10” x 14” (17 x 26)	702	4.0”	18.0”	14.0”	10.75”
10” x 16” (17 x 26)	633	4.0”	20.0”	16.0”	10.75”
10” x 16” (26 x 26)	633	4.0”	20.0”	16.0”	10.75”
12” x 16” (26 x 26)	690	4.0”	20.0”	16.0”	12.75”
12” x 18” (17 x 26)	711	4.0”	22.0”	18.0”	12.75”
14” x 20” (17 x 26)	717	4.0”	24.0”	20.0”	14.0”
16” x 22” (26 x 32)	735	4.0”	26.0”	22.0”	16.0”
18” x 24” (26 x 32)	738	4.0”	28.0”	24.0”	18.0”
20” x 28” (26 x 32)	785	4.0”	32.0”	28.0”	20.0”
22” x 30” (26 x 32)	789	4.0”	34.0”	30.0”	22.0”
24” x 32” (26 x 32)	793	4.0”	36.0”	32.0”	24.0”

Force Transfer Dogbone End Termination with Plug
Part Number + Size Code

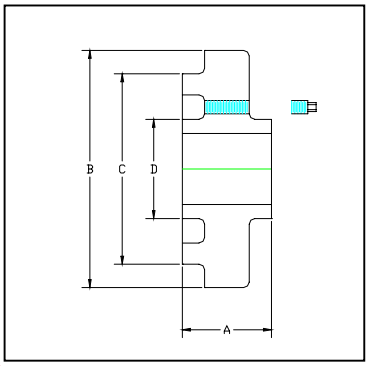

SDR RATING	11 x 11	11 x 17	11 x 26	17 x 26	26 x 26	26 x 32.5
PART # Number						

SIZE (SDRxSDR)	Size code	A	B	C	D
1” x 3” (11 x 11)	134	2.5”	6.0”	3.5”	1.315”
1” x 4” (11 x 17)	401	2.5”	6.625”	4.5”	1.315”
1.5” x 4” (11 x 17)	415	2.5”	6.625”	4.5”	1.9”
2” x 4” (11 x 17)	420	2.5”	6.625”	4.5”	2.375”
2” x 6” (11 x 17)	530	3.0”	8.625”	6.625”	2.375”
3” x 6” (11 x 17)	531	3.0”	8.625”	6.625”	3.5”
3” x 6” (11 x 26)	531	3.0”	8.625”	6.625”	3.5”
3” x 6” (17 x 26)	531	3.0”	8.625”	6.625”	3.5”
4” x 8” (11 x 17)	583	4.0”	10.75”	8.625“	4.5”
4” x 8” (11 x 26)	583	3.0”	10.75”	8.625”	4.5”
4” x 8” (17 x 26)	583	3.0”	10.75”	8.625”	4.5”
6” x 10” (11 x 17)	627	4.0”	12.75”	10.75”	6.625”
6” x 10” (17 x 26)	627	3.0”	12.75”	10.75”	6.625”
6” x 10” (26 x 26)	627	3.0”	12.75”	10.75”	6.625”
8” x 12” (17 x 26)	660	4.0”	15.0”	12.75”	8.625”
8” x 12” (26 x 32)	660	3.0”	15.0”	12.75”	8.625”
10” x 14” (17 x 26)	702	4.0”	18.0”	14.0”	10.75”
12” x 16” (26 x 26)	690	4.0”	20.0”	16.0”	12.75”
12” x 18” (17 x 26)	711	4.0”	22.0”	18.0”	12.75”

Restraint Dogbone End Termination
Part Number + Size Code

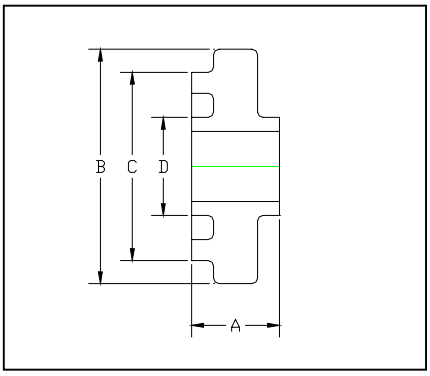

SDR RATING	11 x 11	11 x 17	11 x 26	17 x 26	26 x 26	26 x 32.5
PART # Number						

SIZE (SDRxSDR)	Size Code	A	B	C	D
1” x 3” (11 x 11)	134	2.5”	6.0”	3.5”	1.315”
1” x 4” (11 x 17)	401	2.5”	6.625”	4.5”	1.315”
1.5” x 4” (11 x 17)	415	2.5”	6.625”	4.5”	1.9”
2” x 4” (11 x 17)	420	2.5”	6.625”	4.5”	2.375”
2” x 6” (11 x 17)	530	3.0”	8.625”	6.625”	2.375”
3” x 6” (11 x 17)	531	3.0”	8.625”	6.625”	3.5”
3” x 6” (11 x 26)	531	3.0”	8.625”	6.625”	3.5”
3” x 6” (17 x 26)	531	3.0”	8.625”	6.625”	3.5”
4” x 8” (11 x 17)	583	4.0”	10.75”	8.625“	4.5”
4” x 8” (11 x 26)	583	3.0”	10.75”	8.625”	4.5”
4” x 8” (17 x 26)	583	3.0”	10.75”	8.625”	4.5”
6” x 10” (11 x 17)	627	4.0”	12.75”	10.75”	6.625”
6” x 10” (17 x 26)	627	3.0”	12.75”	10.75”	6.625”
6” x 10” (26 x 26)	627	3.0”	12.75”	10.75”	6.625”
8” x 12” (17 x 26)	660	4.0”	15.0”	12.75”	8.625”
8” x 12” (26 x 32)	660	3.0”	15.0”	12.75”	8.625”
10” x 14” (17 x 26)	702	4.0”	18.0”	14.0”	10.75”
10” x 16” (17 x 26)	633	4.0”	20.0”	16.0”	10.75”
10” x 16” (26 x 26)	633	4.0”	20.0”	16.0”	10.75”
12” x 16” (26 x 26)	690	4.0”	20.0”	16.0”	12.75”
12” x 18” (17 x 26)	711	4.0”	22.0”	18.0”	12.75”
14” x 20” (17 x 26)	717	4.0”	24.0”	20.0”	14.0”
16” x 22” (26 x 32)	735	4.0”	26.0”	22.0”	16.0”
18” x 24” (26 x 32)	738	4.0”	28.0”	24.0”	18.0”
20” x 28” (26 x 32)	785	4.0”	32.0”	28.0”	20.0”
22” x 30” (26 x 32)	789	4.0”	34.0”	30.0”	22.0”
24” x 32” (26 x 32)	793	4.0”	36.0”	32.0”	24.0”

Fluid-Lok® - HDPE

Fluid-Lok® HDPE double containment piping system is available in high density polyethylene and has the widest variety of sizes and wall thickness options. Fluid-Lok® provides a cost-effective piping material with sound engineering design to create a reliable HDPE double wall system for environmental protection. The system is designed around centralizing the carrier pipe inside the containment pipe and locking the two components together. Once inner and outer pipe and fittings are fabricated and locked together, all field welds are performed as in a single wall piping system; inner and outer welds are joined reliably at the same time.

Supply Range

Standard Sizes: 1x3 though 24x32
Materials: PE 4710, PE 3608

Welding Methods:
Simultaneous butt fusion

Features and Benefits

- Homogenous material inside and out, providing equal chemical resistance on the carrier and containment pipe.
- Many leak detection options. Systems can be provided with continuous leak detection cable, low- point sensors, or manual observation ports.
- Custom components can also be supplied for each specific project including:
  - Thermoplastic manholes
  - Double contained valve boxes
  - Observation ports
  - Double contained tanks
  - Custom fittings and assemblies

Sample Specification

System shall be a double containment piping system produced with high density polyethylene on both the product and containment pipe and shall provide the ability to incorporate leak detection as specified. Access tees, pull ropes and low-point instrumentation taps shall be provided as specified by leak detection specifications or contract drawings.

Please consult Asahi/America for expanded product sample specification.

Why Choose Fluid-Lok®?

Available in various SDR combinations to allow cost savings when high pressures are not required (sizes 3x6 and up).

Domestically made HDPE 4710/3608 conforming with Buy American Act requirements.

Fluid-Lok® Ideal Applications

- Landfill
- Ground water remediation
- Mining slurry

ASAHI/AMERICA®

JM Eagle *Building essentials for a better tomorrow™*

POLYETHYLENE WATER & SEWER

SUBMITTAL AND DATA SHEET

Carrier Piping

HDPE IRON PIPE SIZE (I.P.S.) PRESSURE PIPE

ANSI/NSF-61, 14 LISTED

PE 4710		DR 7 (333 psi)			DR 9 (250 psi)			DR 11 (200 psi)		
PIPE SIZE	AVG. O.D.	MIN. T.	AVG. I.D.	WEIGHT LB/FT	MIN. T.	AVG. I.D.	WEIGHT LB/FT	MIN. T.	AVG. I.D.	WEIGHT LB/FT
1/2	0.840	0.120	0.586	0.12	0.093	0.643	0.10	0.076	0.679	0.08
3/4	1.050	0.150	0.732	0.19	0.117	0.802	0.15	0.095	0.849	0.12
1	1.315	0.188	0.916	0.29	0.146	1.005	0.23	0.120	1.061	0.20
1-1/4	1.660	0.237	1.158	0.46	0.184	1.270	0.37	0.151	1.340	0.31
1-1/2	1.900	0.271	1.325	0.61	0.211	1.453	0.49	0.173	1.533	0.41
2	2.375	0.339	1.656	0.95	0.264	1.815	0.77	0.216	1.917	0.64
3	3.500	0.500	2.440	2.06	0.389	2.675	1.66	0.318	2.826	1.39
4	4.500	0.643	3.137	3.40	0.500	3.440	2.75	0.409	3.633	2.30
5-3/8	5.375	0.768	3.747	4.85	0.597	4.109	3.92	0.489	4.338	3.29
5	5.563	0.795	3.878	5.20	0.618	4.253	4.20	0.506	4.490	3.52
6	6.625	0.946	4.619	7.36	0.736	5.065	5.96	0.602	5.349	4.99
7	7.125	0.976	5.056	8.52	0.792	5.446	6.89	0.648	5.751	5.78
8	8.625	1.232	6.013	12.48	0.958	6.594	10.09	0.784	6.963	8.46
10	10.750	1.536	7.494	19.40	1.194	8.219	15.68	0.977	8.679	13.14
12	12.750	1.821	8.889	27.28	1.417	9.746	22.07	1.159	10.293	18.49
14	14.000	2.000	9.760	32.90	1.556	10.107	26.61	1.273	11.301	22.30
16	16.000	2.286	11.154	42.97	1.778	12.231	34.75	1.455	12.915	29.12
18	18.000	2.571	12.549	54.37	2.000	13.760	43.97	1.636	14.532	36.84
20	20.000	2.857	13.943	67.13	2.222	15.289	54.28	1.818	16.146	45.49
22	22.000	3.143	15.337	81.23	2.444	16.819	65.68	2.000	17.76	55.05
24	24.000	3.429	16.732	96.67	2.667	18.346	78.18	2.182	19.374	65.52
26	26.000	—	—	—	2.889	19.875	91.75	2.364	20.988	76.90
28	28.000	—	—	—	3.111	21.405	106.40	2.545	22.605	89.15
30	30.000	—	—	—	3.333	22.934	122.13	2.727	24.219	102.35
32	32.000	—	—	—	—	—	—	2.909	25.833	116.46
34	34.000	—	—	—	—	—	—	3.091	27.447	131.48
36	36.000	—	—	—	—	—	—	3.273	29.061	147.41

I.D. : Inside Diameter
O.D. : Outside Diameter
T. : Wall Thickness

* For data, sizes, or classes not reflected in these charts, please contact JM Eagle™ for assistance.

Revised 3/7/2013. This information may have been updated. Please download the latest version at www.jmeagle.com

JM Eagle *Building essentials for a better tomorrow™*

Containment Piping

HDPE IRON PIPE SIZE (I.P.S.) PRESSURE PIPE (continued)

ANSI/NSF-61, 14 LISTED

PE 4710		DR 13.5 (160 psi)			DR 17 (125 psi)			DR 19 (111 psi)		
PIPE SIZE	AVG. O.D.	MIN. T.	AVG. I.D.	WEIGHT LB/FT	MIN. T.	AVG. I.D.	WEIGHT LB/FT	MIN. T.	AVG. I.D.	WEIGHT LB/FT
1/2	0.840	—	—	—	—	—	—	—	—	—
3/4	1.050	0.078	0.885	0.10	—	—	—	—	—	—
1	1.315	0.097	1.109	0.16	—	—	—	—	—	—
1-1/4	1.660	0.123	1.399	0.26	—	—	—	—	—	—
1-1/2	1.900	0.141	1.601	0.34	—	—	—	—	—	—
2	2.375	0.176	2.002	0.53	0.140	2.078	0.43	—	—	—
3	3.500	0.259	2.951	1.16	0.206	3.063	0.94	0.184	3.110	0.84
4	4.500	0.333	3.794	1.91	0.265	3.938	1.55	0.237	3.998	1.39
5-3/8	5.375	0.398	4.531	2.73	0.316	4.705	2.21	0.283	4.775	1.99
5	5.563	0.412	4.690	2.92	0.327	4.870	2.36	0.293	4.942	2.13
6	6.625	0.491	5.584	4.15	0.390	5.798	3.35	0.349	5.885	3.02
7	7.125	0.528	6.006	4.80	0.419	6.237	3.88	0.375	6.330	3.49
8	8.625	0.639	7.270	7.03	0.507	7.550	5.68	0.454	7.663	5.12
10	10.750	0.796	9.062	10.92	0.632	9.410	8.82	0.566	9.550	7.95
12	12.750	0.944	10.749	15.36	0.750	11.160	12.41	0.671	11.327	11.19
14	14.000	1.037	11.802	18.52	0.824	12.253	14.98	0.737	12.438	13.49
16	16.000	1.185	13.488	24.19	0.941	14.005	19.55	0.842	14.215	17.61
18	18.000	1.333	15.174	30.61	1.059	15.755	24.75	0.947	15.992	22.29
20	20.000	1.481	16.860	37.79	1.176	17.507	30.53	1.053	17.768	27.52
22	22.000	1.630	18.544	45.75	1.294	19.257	36.86	1.158	19.545	33.30
24	24.000	1.778	20.231	54.44	1.412	21.007	43.99	1.263	21.322	39.63
26	26.000	1.926	21.917	63.89	1.529	22.759	51.61	1.368	23.100	46.51
28	28.000	2.074	23.603	74.09	1.647	24.508	59.87	1.474	24.875	53.94
30	30.000	2.222	25.289	85.04	1.765	26.258	68.74	1.579	26.653	61.92
32	32.000	2.370	26.976	96.76	1.882	28.010	78.18	1.684	28.430	70.45
34	34.000	2.519	28.660	109.26	2.000	29.760	88.28	1.790	30.205	79.54
36	36.000	2.667	30.346	122.49	2.118	31.510	98.98	1.895	31.983	89.17
42	42.000	3.111	35.404	166.70	2.471	36.761	134.72	2.211	37.314	121.37
48	48.000	3.556	40.462	217.76	2.824	42.013	175.97	2.526	42.644	158.52
54	54.000	—	—	—	3.177	47.265	222.67	2.842	47.975	200.63

* For data, sizes, or classes not reflected in these charts, please contact JM Eagle™ for assistance.

Revised 3/7/2013. This information may have been updated. Please download the latest version at www.jmeagle.com

DOUBLE WALL SYSTEMS

Installing any piping system properly requires preplanning. The installation is more than the welding of components. It requires the proper environment, material inventory, welding equipment, tools, and thorough training. This guide is to assist in the planning and installation of a double wall pipe system either in a pipe rack or trench.

This guide will concentrate on Duo-Pro and Fluid-Lok systems, as produced and supplied by Asahi/America, Inc. Duo-Pro and Fluid-Lok systems are similar with only a few minor exceptions. Both systems are highly engineered systems, fabricated from single wall components to provide the widest variety of selection and performance for all circumstances. By the time a Duo-Pro system arrives on site, most of the engineering and design layout work should have been completed.

Covered in this guide are the steps to plan and complete a successful installation.

Step 1. Welding Environment
Step 2. Tool Selection
Step 3. Material Handling
Step 4. Training and Preparation
Step 5. Tool Commission and Daily Checks
Step 6. Pipe Cutting
Step 7. Weld Preparation
Step 8. Weld Inspection
Step 9. Hanging
Step 10. Trenching and Burial
Step 11. System Testing
Step 12. Repair Procedures

Step 1. Welding Environment

Asahi/America does not set requirements for proper welding environments. As the installer, it is necessary to choose the environment based on the installation type, timing or quality goal. In most systems, pipe is either going into a pipe rack, beneath a floor or wall, or buried underground. In all these cases, conducting welds in the actual final location may not always be the most convenient location for welding. In fact, in most cases, it is preferable to prefabricate spool piece components and conduct final welds or hook-up in the pipe rack.

If possible, set up a welding area to build the spool pieces. The weld area should be situated in an area that has reduced exposure to wind, possible rain, and extreme cold temperatures. Building spool pieces inside a weld shop may prove advantageous. A fairly controlled environment and organized work space will improve efficiency and quality of the system to be installed.

Not all welding can be conducted in a shop and eventually field welds will need to be done. Some systems will be installed completely outside, with all the welds perhaps conducted in place.

When welding outside, several factors have to be considered. It is always important not to weld in the rain. Rain will damage equipment and improperly influence the weld. For rainy days, a shelter or tent should be constructed over equipment. In addition to rain, high winds and cold temperatures, below 40° F, will negatively influence the welding process. If these conditions are not avoidable, a heated tent structure is recommended. For specific recommendations by tool type, consult the Asahi/America Engineering Department.

When conducting field welds in a pipe rack or in a trench, it is important to have the location of the weld well planned. Vertical welds in any location will prove difficult to conduct and should be avoided. The field weld that connects up prefabricated spool pieces should be a pipe-to-pipe weld whenever possible. Pipe-to-pipe welds are easier to align and level, making the weld easier to conduct in possibly tight quarters.

In all field welds, in the rack or in a trench, it is important to have ample room for welding equipment and to choose the proper welding equipment. In some underground installations, it may be necessary to increase the width of the trench in weld locations. Many underground systems are welded above ground and then lowered down into the trench to avoid placing equipment in narrow trenches. The same is true in crowded pipe racks. Many times it will prove more efficient to prefab spools and use flanges or unions to connect them together in the pipe rack. Consult Asahi/America for the design and use of a double contained flange.

Step 2. Tool Selection

The selection of the type of welding method conducted on a double wall industrial piping project should be based on the following criteria:

- Material
- Sizes to be installed
- Welding location
- Type of installation
- Similar to dissimilar material
- Available expertise

For assembling double containment piping systems made from PVDF, PP, E-CTFE, and HDPE, there are many choices of equipment available, each having its advantages and disadvantages. On all Asahi/America's standard double wall containment systems, butt fusion is the only joining system offered due to its ideal functionality in this application. Tables F-15 and F-16 contain data on available welding equipment. There is no one right piece of equipment that can handle all sizes and materials. It is absolutely critical to have the right equipment on site for proper installation.

ASAHI/AMERICA
Rev. EDG–02/A
P.O. Box 653 • 35 Green Street, Malden, MA 02148 • Tel: (800) 343-3618, (781) 321-5409
Fax: (800) 426-7058 • Internet: http://www.asahi-america.com • Email: asahi@asahi-america.com

Table F-15. Equipment Selection: Simultaneous Fusion

Description	Pro 150 x 150	Pro 150 x 45	Pro 45 x 45	PVDF x PVDF	HDPE SDR 11 x 11	HDPE SDR 11 x 17	HDPE SDR 17 x 17
Shop 4	1 x 3: A	2 x 4: A	2 x 4: A	1 x 3: A	1 x 3: A	1 x 3: A	1 x 3: A
Miniplast	2 x 4: A	—	—	2 x 4: A	2 x 4: A	2 x 4: A	2 x 4: A
Shop 12	2 x 4: A	2 x 4: A	2 x 4: A	2 x 4: A	2 x 4: A	2 x 4: A	2 x 4: A
	3 x 6: A	3 x 6: A	3 x 6: A	3 x 6: A	3 x 6: A	3 x 6: A	3 x 6: A
	4 x 8: B	4 x 8: B	4 x 8: B	4 x 8: B	4 x 8: B	4 x 8: B	4 x 8: B
	6 x 10: X	6 x 10: B	6 x 10: B	6 x 10: B	6 x 10: X	6 x 10: X	6 x 10: x
Field 6	2 x 4: A	2 x 4: A	2 x 4: A	2 x 4: A	2 x 4: A	2 x 4: A	2 x 4: A
	3 x 6: A	3 x 6: A	3 x 6: A	3 x 6: A	3 x 6: A	3 x 6: A	3 x 6: A
Field 12	3 x 6: A	3 x 6: A	3 x 6: A	3 x 6: A	3 x 6: A	3 x 6: A	3 x 6: A
	4 x 8: A	4 x 8: A	4 x 8: A	4 x 8: A	4 x 8: A	4 x 8: A	4 x 8: A
	6 x 10: A	6 x 10: A	6 x 10: A	6 x 10: A	6 x 10: A	6 x 10: A	6 x 10: A
	8 x 12: B	8 x 12: A	8 x 12: B	—	8 x 12: B	8 x 12: B	8 x 12: B
Field 20	4 x 8: B	4 x 8: B	4 x 8: B	—	4 x 8: B	4 x 8: B	4 x 8: B
	6 x 10: A	6 x 10: A	6 x 10: A	—	6 x 10: A	6 x 10: A	6 x 10: A
	8 x 12: A	8 x 12: A	8 x 12: A	—	8 x 12: A	8 x 12: A	8 x 12: A
	10 x 14: A	10 x 14: A	10 x 14: A	—	10 x 14: A	10 x 14 A	10 x 14: A
	12 x 16: A	12 x 16: A	12 x 16: A	—	12 x 16: A	12 x 16: A	12 x 16: A
	—	14 x 18: A	14 x 18: A	—	—	14 x 18: A	14 x 18: A
	—	16 x 20: A	16 x 20: A	—	—	16 x 20: A	16 x 20: A
MacElroy 1-4	X	X	X	X	1 x 3 A	1 x 3 A	—
	X	X	X	X	1 x 4 A	1 x 4 A	—
	X	X	X	X	1.5 x 4 A	1.5 x 4 A	—
	X	X	X	X	2 x 4 A	2 x 4 A	—
MacElroy 2-8	X	X	X	X	2 x 4 A	2 x 4 A	—
	X	X	X	X	3 x 6 A	3 x 6 A	3 x 6 A
	X	X	X	X	4 x 8 A	4 x 8 A	4 x 8 A
MacElroy 4-12	X	X	X	X	4 x 8 A	4 x 8 A	4 x 8 A
	X	X	X	X	6 x 10 A	6 x 10 A	6 x 10 A
	X	X	X	X	8 x 12 A	8 x 12 A	8 x 12 A
MacElroy 6-18	X	X	X	X	6 x 10 A	6 x 10 A	6 x 10 A
	X	X	X	X	8 x 12 A	8 x 12 A	8 x 12 A
	X	X	X	X	10 x 14 or 10 x 16 A	10 x 14 or 10 x 16 A	10 x 14 or 10 x 16 A
	X	X	X	X	12 x 16 or 12 x 18 A	12 x 16 or 12 x 18 A	12 x 16 or 12 x 18 A
MacElroy 8-24	X	X	X	X	8 x 12 B	8 x 12 B	8 x 12 B
	X	X	X	X	10 x 14 or 10 x 16 B	10 x 14 or 10 x 16 B	10 x 14 or 10 x 16 B
	X	X	X	X	12 x 16 or 12 x 18 A	12 x 16 or 12 x 18 A	12 x 16 or 12 x 18 A
	X	X	X	X	14 x 20 or 14 x 22 A	14 x 20 or 14 x 22 A	14 x 20 or 14 x 22 A
	X	X	X	X	16 x 22 or 16 x 24 A	16 x 22 or 16 x 24 A	16 x 22 or 16 x 24 A
	X	X	X	X	18 x 24 A	18 x 24 A	18 x 24 A

A: Recommended. B: Will work, but a better choice is available. X: Not recommended.

Table F-16. Equipment Selection: Staggered Welding

Description	Pro 150 x 150	Pro 150 x 45	Pro 45 x 45	PVDF x Pro 150	PVDF x Pro 45	PVDF x PVDF
1 x 4	Shop 4 Shop 10	Shop 4 Shop 10	DNA	Shop 4 Shop 10	DNA	Shop 4 Shop 10
2 x 4	Shop 4 Shop 10	Shop 4 Shop 10	DNA	Shop 4 Shop 10	Shop 4 Shop 10	Shop 4 Shop 10
3 x 6	Shop 10	Shop 10	DNA	Shop 10	Shop 10	Shop 10
4 x 8	Shop 10	Shop 10	Shop 10	Shop 10	Shop 10	Shop 10
6 x 10	Shop 10 carrier Field 12 containment	Shop 10 carrier Field 12 containment	Shop 10 carrier Field 12 containment	Shop 10 carrier Field 12 containment	Shop 10 carrier Field 12 containment	Shop 10 carrier Field 12 containment
8 x 12	Shop 10 carrier Field 12 containment	Shop 10 carrier Field 12 containment	Shop 10 carrier Field 12 containment	Shop 10 carrier Field 12 containment	Shop 10 carrier Field 12 containment	Shop 10 carrier Field 12 containment
10 x 14	Shop 10 carrier Field 12 containment	Shop 10 carrier Field 12 containment	Shop 10 carrier Field 12 containment	Shop 10 carrier Field 12 containment	Shop 10 carrier Field 12 containment	Shop 10 carrier Field 12 containment

P.O. Box 653 • 35 Green Street, Malden, MA 02148 • Tel: (800) 343-3618, (781) 321-5409
Fax: (800) 426-7058 • Internet: http://www.asahi-america.com • Email: asahi@asahi-america.com

Step 3. Material Handling

When pipe, fittings, and fabrications arrive on site, they should be inspected to ensure the proper components have arrived and no damage has occurred during shipment. Asahi/America goes to great lengths to ensure that pipe and fittings are properly packaged for shipment. If damage occurs, the freight company should be notified immediately.

Preferably, pipe should be stored inside or in a trailer. Care should be taken to properly support pipe during storage. Use the hanging criteria for the proper support distance. Pipe can be stacked during storage. Heavier pipes of larger dimensions should be stored at the bottom. However, it may prove more practical to segregate by size for easier access during the project. Pipe should not be stored above the recommended maximum height of 4 feet.

If material is stored outside, it is preferable to cover with a tarp in case of rain. PVDF is UV resistant, but polypropylene will degrade over time when exposed directly to UV. Depending on the size of the pipe and the wall thickness, it could cause physical damage that could reduce the allowable pressure rating. In all cases, the UV will cause a color change over time that may not be acceptable for aesthetic reasons. In general, covering polypropylene during storage is recommended.

Fittings are best kept in their boxes or bags, as they are shipped in separate containers by size, style, and material. This will allow for simplified picking and inventory control throughout the project.

Step 4. Training and Preparation

A double containment system is a critical utility within a plant. It is often under flooring or underground where it is not easily accessible. In addition, double containment systems also are in overhead piping and provide additional needed safety for plant personnel from a leak in a hazardous chemical system. A repair to a system can prove difficult and costly. One bad weld can cause hours of repair and frustration, as well as lost revenue. For these reasons, it is critical to receive training at the time of job start-up and use certified personnel throughout the course of a project.

Tool operation is only one of several factors in a thorough training course. Operators, inspectors, and managers need to understand the physical nature of the material, how to properly handle it, how to inspect welds, how to identify potential problems, how to properly maintain equipment and finally, how best to tie into a line and test it.

During Asahi/America's certified training sessions, all of the above topics are discussed. For the installation of a double containment system, the following training sessions are available:

- Tool Operator Training
- Quality Control Inspection

Both of these can be conducted on site during the time of the start-up. The depth of training in a double containment piping system is based on the system type to be installed. Systems that require staggered fusion are more involved to install and may require the operation of different equipment.

In addition to the above on-site training, Asahi/America also offers courses that are held at the corporate office for the following topics:

- Certified Maintenance and Repair
- Certified Trainer (prerequisites apply)

Consult with Asahi/America's Engineering Department for dates and availability of corporate programs.

During the on-site training process, Asahi/America certified trainers will set recommendations for the class size based on the tool type. In general, groups of four are recommended for the welding operation portion of the training. Typically, two groups can be certified in one day on the welding portion of the seminar. On simple installations, it may be faster; and on more complex installations, it may be longer. To reduce the distraction within the class, it is important that only personnel who will be conducting the weld operation during the project participate in the training. It is also recommended that if a third party QC is to be used that they also attend the full training course to fully understand the welding process and QC parameters.

Preparation

To best use training time, preparation should be made prior to the trainers' arrival on site. A recommended list of preparations follows.

- Ensure that project material is on site. It is not critical to have all material, but enough to start the project. Once training is complete, it is practical for the trainer to oversee the beginning portion of the installation. Many times new questions and challenges arise once the actual installation starts. In addition, if there is a significant period of time between the training and actual installation, operators may forget portions of the training or different operators may now be slated for the welding operation. Both scenarios require additional training.
- Ensure required tools are on site. Do not open the tools until a certified trainer is present. If more tools are ordered during a project, this is no longer required as proper unpacking and set up of the equipment is covered in the training process.
- Ensure that the correct power is available. Many pieces of equipment require 220 Volt single or three phase power supply. Consult with the factory or distributor at the time of tool ordering.
- If possible, have a conference room with an overhead projector available for the classroom portion of the training. If this is not available, select an area where all personnel will be able to see and hear the trainer for this portion of the discussion.

P.O. Box 653 • 35 Green Street, Malden, MA 02148 • Tel: (800) 343-3618, (781) 321-5409
Fax: (800) 426-7058 • Internet: http://www.asahi-america.com • Email: asahi@asahi-america.com

- Ensure that pipe samples are available for the training session. Asahi/America does not normally provide samples for the training.
- Ensure extra components such as welding rod, support discs, and hot air welders are ordered and available at the time of training. Such components.will be required throughout the project.

Formal training can be the key factor in starting a project off in the right direction. Take advantage of this service while on site. Asahi/America also offers field technicians for hire to oversee project welding and training for any specified amount of time. Contact the Asahi/America Engineering Department for more information.

Step 5. Tool Commission and Daily Checks

Checking equipment and welding technique daily is recommended. This is particularly important on larger projects where there are many welders on site. This daily check will allow QA to ensure all welders are up to speed on tool operation, welding technique, and inspection. Most problems in the field occur due to improper usage of equipment, rather than equipment failure.

During the initial training of the project, many welds are produced in the presence of a qualified trainer. These welds should be kept and used for the daily checks. Each welder should conduct one coupon test weld and submit it to QA. The coupons should be compared to initial samples. Inspection should include bead formation, sizing, and weld label.

Conducting preventive maintenance to the equipment at the beginning of each day is also required. The maintenance recommended varies on each weld tool type. Consult the Operation Manual for items to be checked daily.

By keeping equipment in good operating condition and ensuring all operators are up to speed, tool problems or welding errors are less likely to occur.

Step 6. Pipe Cutting

Cutting plastic pipe can be handled in a variety of methods. In small dimensions, 1/2" through 4", roll wheel pipe cutters are commonly available and work well. These types of cutters are similar to a tube cutter, but only larger. When using a roll cutter on PP or PE, it is important to ensure the wheel has a larger radius than the wall thickness of the pipe so it will cut all the way through. A roll cutter will only cut single wall pipe. It can be used to cut the inner and outer pipe separately, but if a pipe is already fabricated into a double contained configuration, a roll cutter cannot be used. Poly-Flo systems cannot be cut using a roll cutter.

In most sizes, band saws, vertical or horizontal, will work very well for plastic. Since plastic pipes can have a very heavy wall thickness, it is important to travel slowly through the band saw to avoid the blade from bending and creating an angled cut. For smaller pipe sizes and Poly-Flo pipes up to 2 x 3, a circular blade chop saw will also provide neat and accurate cuts. A miter box chop saw is also very useful if angled welds are to be done in the field.

If only manual saws are available, a hack saw will certainly cut through small dimensions, but avoid using a fine blade as it will take considerable time. In addition, reciprocating saws are generally not the best choice as the blades are only long enough to cut one wall at a time. If too fine of a blade is used, the material will become hot and can fuse itself back together partially behind the blade travel.

Step 7. Weld Preparation

The type of material and system will dictate welding method and tool selection. One important factor in welding a Duo-Pro or Fluid-Lok system is the alignment of the support discs. To allow the pulling of cable, it is necessary to have the disc openings aligned at the pipe bottom.

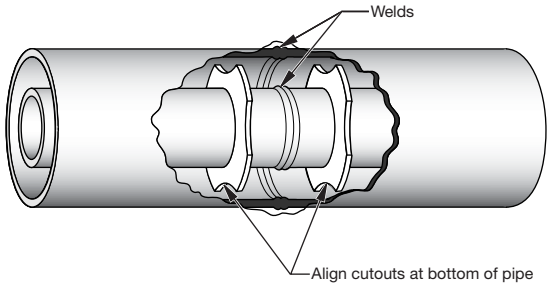

Figure F-93. Support disc alignment

In a Poly-Flo system, it is important to rotate the pipe ribs. Since a Poly-Flo system cannot accommodate leak detection cable, rotating the ribs is recommended to allow a possible leak to make its path to the bottom annular space.

The cold weld is more difficult to identify, and virtually impossible to detect with the naked eye. Two cross-sectional views of a pipe wall that has been welded are shown in Figure F-79. Weld 1 is a good fusion joint, while Weld 2 is a cold weld. Notice in the cold weld there is very little material joined together in the pipe wall area. The molten material has been forced to the outer and inner bead, and the unheated sections of the pipe have been forced together in the pipe wall region. In the proper Weld 1, you can see there is material joined together in the pipe wall, as well as in the inner and outer beads.

P.O. Box 653 • 35 Green Street, Malden, MA 02148 • Tel: (800) 343-3618, (781) 321-5409
Fax: (800) 426-7058 • Internet: http://www.asahi-america.com • Email: asahi@asahi-america.com

Step 8. Weld Inspection

To ensure a safe and on-time system start-up, initiating a standard inspection process is recommended on each project. This quality assurance measure can be conducted by a third party QC or can be done by each individual operator after each weld. A recommended inspection report for recording quality assurance on each weld is attached to the end of Section F. Use the recommendation of this weld inspection guide in conjunction with the equipment manual to achieve the best project results.

To inspect butt-fusion joints, the inspector should look for the following characteristics on each weld.

- Welds should have two beads that are 360° around the pipe.
- Beads should be of consistent height and width.
- Beads should have a rounded shape.
- Beads should be free of burrs or foreign material.
- A bead on either side should not reduce greatly in width or disappear.
- Components welded should be properly aligned and cannot be misaligned by more than 10% of the wall thickness.

When welding the inner and outer pipe and fitting simultaneously, the outer bead will provide an accurate depiction of the inner weld. If the outer pipe appears improperly aligned, the inner pipe will also be out of alignment. For simultaneous fusion, it is necessary to ensure the carrier component is flush in length with the containment component. Check on each part with a straight edge after the planing and prior to the heating step of welding. Other methods include marking the ends of the carrier in four locations 90° apart prior to planing. If planing on the containment pipe is complete and all the original marks on the carrier have been removed by the planer, then both parts are flush.

Figure F-94 shows a detail of a standard butt-fusion bead formation.

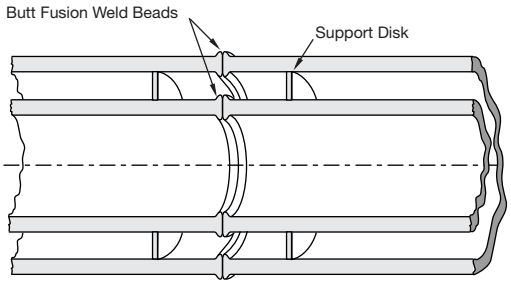

Figure F-94. Typical butt-fusion weld bead

Butt-fusion beads will vary in size and a little in shape with different materials. In general, PP and HDPE will have larger bead formations in comparison to PVDF. With PP and HDPE, there will be a pronounced double-bead formation that will be simple to identify. With PVDF, there will also be a double-bead formation, but not as pronounced. The material will appear to flow more together, making what appears to be one single weld. However, upon examination, you will always see the seam where the components were joined. In addition, when butt welding PVDF pipe to fittings, the fitting bead will be larger than the pipe bead. This is normal as the resin used to produce PVDF fittings flows at a higher rate when melted compared to the resin used to extrude pipes. Mechanically, there will be no issues on strength of the joint, only the appearance of the weld.

Since outside temperatures and conditions will have some effect on bead sizes, there is no formal specification for the size of the bead. Also, measuring each bead would be time consuming. During the training process, welding one of each size to use as a rough gauge for the project may prove useful. These sample coupons can be referred to on a regular basis to check welding throughout the project.

If bead formations do not meet the inspection criteria, they should be rejected. Consult the operation manual for each tool on how to correct the problem. If problems persist, contact Asahi/America for assistance. Many times these issues can be cleared up quickly over the phone, avoiding waste in time and material. Never continue welding if proper fusion cannot be accomplished. This will only add to problems at a later time.

Limitations of Inspection

Following proper weld procedures in conjunction with a thorough inspection process will lead to a safe and reliable system. However, a weld cannot be 100% judged by viewing it after the fusion is complete. Bad welds with obvious problems can be identified, such as missing beads, small beads, and misalignment, but other problems may not be easily found.

A cold weld occurs when an operator either maintains too high a force during the heat soak time or joins the material together at too high a force. Molten material is then pushed to the outer bead and cooler material is forced together inside the weld.

P.O. Box 653 • 35 Green Street, Malden, MA 02148 • Tel: (800) 343-3618, (781) 321-5409
Fax: (800) 426-7058 • Internet: http://www.asahi-america.com • Email: asahi@asahi-america.com

The problem with inspecting a cold weld is the outer bead is the same as a good joint. Since the occurrence of a cold weld is difficult to find and inspect, it is important to use proper welding procedures when joining the material. The issue of inspecting and avoiding a cold weld is no different than a PVC joint that has not been primed prior to cementing. You cannot tell after the weld is made, but if you correctly follow procedures, it will not occur. Cold welds can be avoided with the following operating techniques on all butt fusion and socket fusion equipment.

- Ensure proper heating element temperature throughout the project.
- Use the correct welding parameters by pipe size, wall thickness, and material.
- Do not delay between removal of heating element and joining of material.
- Do not slam material together after heating. Material should be joined quickly, but the pressure build up should be smooth and even.
- Do not join components together above the joining force.

Step 9. Hanging

Hanging any thermoplastic double wall system is not that much different than hanging a metal system. Typically, the spacing between hangers is shorter due to the flexibility of plastic. In addition, the type of hanger is important.

Hangers should be placed based on the spacing requirements provided in Appendix A. Since thermoplastic materials vary in strength and rigidity, it is important to select hanging distances based on the material you are hanging. Also, operating conditions must be considered. If the pipe is operated at a higher temperature, the amount of hangers will generally be increased. Finally, if the system is exposed to thermal cycling, the placement of hangers, guides, and anchors is critical In these cases. The hanger locations should be identified by the system engineer and laid out to allow for expansion and contraction of the pipe over its life of operation.

When selecting hangers for a system, it is important to avoid using a hanger that will place a pinpoint load on the pipe when tightened. For example, a U-bolt hanger is not acceptable for high-purity thermoplastic piping systems. See Figures F-95 and F-96.

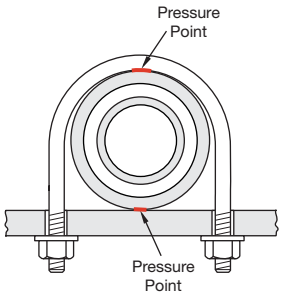

Figure F-95. Effects of U-bolt on pipe– not recommended

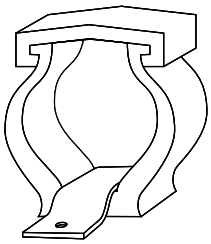

Figure F-96. Recommended hanger

Hangers that secure the pipe 360° around the pipe are preferred. Thermoplastic clamps are also recommended over metal clamps, as they are less likely to scratch the pipe in the event of movement. If metal clamps are specified for the project, they should be inspected for rough edges that could damage the pipe. Ideally, if a metal clamp is being used, an elastomeric material should be used in between the pipe and the clamp. This is a must for PVDF and E-CTFE systems, which are less tolerant to scratching.

P.O. Box 653 • 35 Green Street, Malden, MA 02148 • Tel: (800) 343-3618, (781) 321-5409
Fax: (800) 426-7058 • Internet: http://www.asahi-america.com • Email: asahi@asahi-america.com

Step 10. Trenching and Burial

Proper trenching and burial of a pipe system requires engineering prior to an installation. Asahi/America's *Engineering Manual* (Section C) provides a comprehensive guide to burial calculations load tolerance of thermoplastic pipe. This information should be supplied and be specified prior to installation. Refer to Asahi/America's manual for the burial calculations.

For installation purposes, it is important to look at several factors as the installer of underground piping.

- Soil conditions should match that of the specification and/or drawings.
- Trenches should be dug according to plan.
- Pipe should be surrounded by specified soil type and compaction.
- Accommodations for welding in the trench should be made.
- Safety issues of being in a trench should always be observed.

For each underground installation, burial designs will specify depth of trench and width of trench. The wider the trench, the more load the pipe will see upon compaction. Therefore, it is important to follow trench design closely to avoid excess load on the pipe. In addition to the trench details, the type of soil becomes important. Different types of soils have differing densities and will create differing loads on the buried pipe. If the soil does not match that of the design, it needs to be rechecked or different top fill may be required.

The surrounding material of the pipe is also important. Items such as large rocks may cause pinpoint loads on the pipe that could eventually damage the pipe. Figure F-97 depicts a recommended cross section of a trench and proper fill material and compaction.

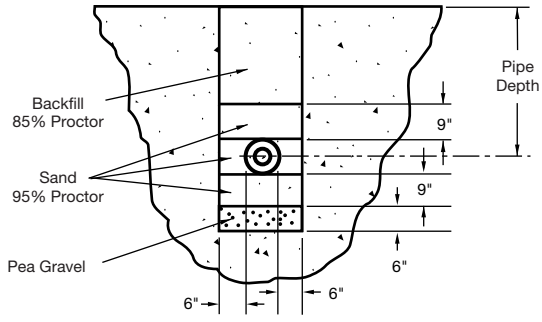

Figure F-97. Trench detail

Welding in a trench should also be preplanned. It is common that all welding is done above ground, and then, the welded components are all lowered into the trench. In many instances it may be necessary to weld in the trench. For conducting welds in a trench, it is important to allocate space for the machine as it will be wider than the pipe itself. Widening of the trench may be required to accommodate the machine.

Step 11. System Testing

Procedures for testing installed sections of Duo-Pro systems must take into account factors affecting both carrier and containment pipes. Basic recommendations may be given, but a comprehensive testing program should be developed for each and every system design. The program should be developed based on the needs and characteristics of the particular system at hand.

All pressure tests must be conducted prior to backfilling a buried system.

Carrier Pipe, Pressure System

If the carrier piping is intended for pressure service greater than 10 feet of head, a hydrostatic pressure test must be conducted.

In any hydrostatic pressure test, provisions must be made to vent all air out of the inner pipe. If necessary, special high-point vents should be installed to bleed any trapped air. Air pockets can create a dangerous situation if a cold weld exists and is found during a test. Compressed air pockets can contribute to extensive propagation of fault lines when a failure occurs. Compressed air or gas should not be used for pressure testing of any carrier pipe in excess of 10 psi.

Pressure tests should be conducted at a maximum of 150 percent of the operating pressure of the lowest rated component of the system.

F

Filling the System
The piping should be capped off at the end of the spool section to be tested and fitted with an adapter to allow tie-in for testing. All flanges in the vertical position should be left open at this point. Bleed off air through the relief valves.

Introduce water very slowly into the system at the low point. In no instance should the water velocity exceed two feet per second. When the water fills all vertical risers, the flanges can be resealed. The relief valves should be left open until it is certain that all air is out of the system.

The system can then be brought up to pressure through gradual steps using a hand pump or other similar equipment.

Do not use city water pressure to accomplish this step if the water pressure in the city mains is greater than the pressure test to be conducted.

Conducting the Test
The test should be done in gradual steps of 10 psi for Pro 150/PE 150, 5 psi for Pro 45/PE 45, or 10 psi for PVDF until the desired pressure is achieved. There will be some gradual drop in pressure due to natural creep effects and elongation of the pipe wall. Also, there could be some drop occurring due to thermal expansion effects where there are sudden environmental temperature changes.

After one hour, check the pressure gauge. If there is a decrease without an indication of leakage, pump the pressure back up to the test pressure. If the total pressure drops more than 10% after the second pressurization, the test can be considered a failed test. Check the system for leaks or other problems. Otherwise, continue the pressure test for a minimum of two hours up to a recommended duration of 12 hours or as required by local code requirements.

Cyclic Hydrostatic Testing
In critical applications, the inner piping should be tested hydrostatically for more than one cycle. To test for more than one cycle, do not empty the system and start all over. Instead, drop the system pressure down to below 5 psi, and then raise it back in gradual steps of 10 to 20 psi to the desired test pressure. Follow the same procedures as described above. Repeat this procedure for as many cycles as required up to a maximum recommendation of seven cycles.

Note: Do not use fabricated drainage fittings in pressurized systems where a pressure over 10 feet of head is required. Use molded pressure fittings in these applications.

Carrier Pipe, Drainage Systems
Inner piping that is intended for drainage service (10 feet of head or less) should be tested by implementing a 10-foot standing water test. A 10-foot standing water test consists of welding or attaching in some manner a 10-foot riser to the upstream (high end) of the system. It is not unusual that there are several high points (branch connections) in a system. It is important that every riser or branch connection be affixed with a 10-foot riser in order to ensure that every point in the system will see 10 feet of head. In fact, at the low point, the system will see a pressure equal to 10 feet of head plus the value of the elevation change. A maximum of 20 feet of head must not be exceeded in a drainage system.

To consider a standing water test acceptable, the water level after 12 hours should be at a level equal to the level at the start of the test, minus normal evaporation and expansion due to temperature fluctuations. Compressed air or gas should not be used for pressure testing of any carrier pipe in excess of 10 psi.

Containment Pipe, Pressure Systems

If outer piping is designed and required to withstand the same pressure as the inside piping, then a hydrostatic pressure test should be conducted for both inner and outer pipes. This is for situations where the inner pipe pressure is greater than 10 psi. It is important to remember that when the annular space is pressurized during this situation, two pipes are involved. A plastic pipe is always less capable of withstanding external pressure than internal pressure. The inner pipe should be kept full of water at a pressure equal to the pressure test of the outer pipe.

Equal pressure on the carrier and containment is necessary for the following reasons:

1. To prevent possible collapse of the inner piping during the test.
2. Both the inner and outer piping will elongate equally, thus minimizing any differential stress or stress buildup between the two pipes.
3. In the event of a carrier failure, the containment piping must handle the same pressure as the carrier. The inner pipe will continue to pressurize the outer pipe until the two reach an equilibrium.

P.O. Box 653 • 35 Green Street, Malden, MA 02148 • Tel: (800) 343-3618, (781) 321-5409
Fax: (800) 426-7058 • Internet: http://www.asahi-america.com • Email: asahi@asahi-america.com

Filling the System
The outer piping can be filled after the inner test is conducted or at the same time as the inner pipe. The system should be filled in the exact same way as described for pressurized carrier pipe.

Do not use city water pressure to accomplish this step if the water pressure in the city mains is greater than the pressure test to be conducted.

In many cases, it is not an advantage to conduct a hydrostatic test on the annular space, as it is very difficult to dry the space after the test. An air test can be used as an alternative. The pressure should be no higher than 10 psi, and extra safety precautions must be made for surrounding personnel. In all cases, the ambient temperature should be above 32° F. The carrier pipe should also be filled with water and pressurized any time a test is conducted on the annular space.

Conducting the Test

Testing is conducted on the containment in the same manner as the carrier. The test should be done in gradual steps of 10 psi for Pro 150/PE 150, or 5 psi for Pro 45/PE 45 until the desired test pressure is achieved. There will be some gradual drop in pressure due to natural creep effects and elongation of the pipe wall. Also, there could be some drop occurring due to thermal expansion effects where there are sudden ambient changes.

After one hour, check the pressure gauge. If there is a decrease without an indication of leakage, pump the pressure back up to the test pressure. If the total pressure drops more than 10% after this second pressurization, the test can be considered a failed test. Check the system for leaks or other problems. In larger systems and pipelines exposed to large changes in temperature, it may take several tries to get the pressure to remain constant. Otherwise, continue the pressure test for a minimum of two hours up to a recommended duration of 12 hours. A cyclic hydrostatic test as described above for the inner pipes may be used where appropriate.

Note: Do not use fabricated drainage fittings in pressurized systems where a pressure exceeding 10 feet of head is required. Use molded pressure fittings in these applications.

Containment Pipe, Drainage Systems
Outer piping that is intended for drainage capability (10 feet of head or less) or that is flowing open ended, should be tested by implementing a 10-foot standing water test. It should be noted that the carrier pipe pressure must be maintained equal to the outer pipe pressure at all points in order that the inner pipe does not collapse. Pro 45/PE 45 inside carrier pipe is common in some large-diameter systems such as drainage mains. In order to test these systems, special consideration must be given to ensure that the inner pipe is kept under equal pressure with the outer pipe.

The standing water test should be conducted in the same manner as the inside pipes. A riser should be attached to every vertical riser equal to 10 feet, and the system filled with water. The level should be checked after 12-18 hours, and if no fluid has escaped (minus normal evaporative losses and expansion due to temperature fluctuation), the test should be considered successful. It should be noted that the total of the elevational change plus 10 feet should not exceed the sum of 20 feet.

In order not to trap fluid in the annular space, a low-pressure compressed air or nitrogen test (≤10 psi) may be used. Note that if this type of test is used, the carrier inner pipe must be filled with fluid and kept to at least the level of the pressure in the annular space to prevent collapse. If this type of test is used, it is required to "soap" each joint thoroughly to check for visual leaks. In addition, the pressure gauge must also be checked after 2-12 hours for indication. Again, any time compressed air is used, extra safety precautions should be taken. Air tests should be done at 32° F or higher ambient temperature.

Annular Test, Drainage Systems

The purpose of the annular test is to test both the carrier and containment simultaneously. For low-pressure drainage systems, an annular test can be conducted to reduce test time. This type of test can only be used on drainage systems using Pro 150 carrier.

Cap off the carrier and containment pipe, and provide a pressure gauge on each. Using low-pressure compressed air (≤10 psi), charge the annular space. In a tight system, the containment gauge should read 10 psi (minus losses due to creep), and the carrier gauge should be zero. If there is a leak in the containment piping, the containment gauge will begin to drop. If, however, there is a leak in the carrier piping, the inner piping will become pressurized. See Figure F-98 for typical test results. Pressure should be maintained on the system for 2-12 hours to ensure against a possible slow leak.

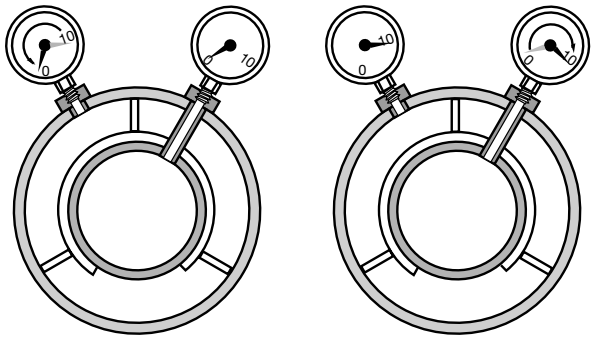

(a) Leak Out of Containment Pipe (b) Leak In to Carrier Pipe

Figure F-98. Annular pressure test leak indications

P.O. Box 653 • 35 Green Street, Malden, MA 02148 • Tel: (800) 343-3618, (781) 321-5409
Fax: (800) 426-7058 • Internet: http://www.asahi-america.com • Email: asahi@asahi-america.com

Drying the Annular Space

If the annular space is contaminated with water due to the test procedures or other unforeseen events, it is essential that all moisture be removed thoroughly to minimize condensation that may cause false alarms in leak detection cables and low-point sensors. As discussed in Section C, *Engineering Theory and Design Considerations*, the installation of properly sized vents and drains will assist greatly with this process. It may be necessary to use Vortek blowers and/or clean dry air to remove all moisture completely. The greater the number of vents and drains, the higher the volume of air can be pushed through the system, thereby decreasing the drying time. As it is extremely difficult to remove moisture from the annular space, it may be appropriate to use compressed air (≤10 psi) for testing carrier and containment pipe where pressure requirements are low. Use of compressed air will not contaminate the annular space with moisture.

Locating a Leak

In the event of a leak in the carrier, the pressure should be relieved and the water drained to prevent flooding of the annular space. To determine the location of the leak, Asahi/America has available ultrasonic leak detection guns, as shown in Figure F-99. The gun is capable of hearing disturbances in air flow (vibration) through the containment wall. To locate the leak, put a compressed air charge on the carrier piping (≤10 psi). Using the gun, walk the pipe line placing the gun extension against the containment wall. The compressed air escaping through a leak will be heard through the ear phones of the gun, thus locating the leak. In many situations, the time required to locate a leak on the carrier pipe using this technology is less than one hour.

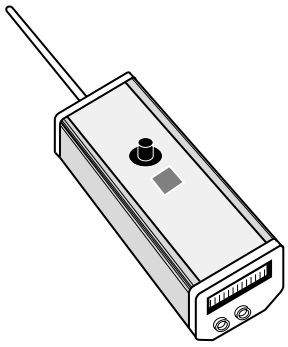

Figure-99. Ultrasonic leak detection gun

Step 12. Repair Procedures

A properly designed, installed, and maintained double-containment piping system will provide years of reliable service. The system, however, should offer the means to perform a repair in the event of a mishap, and this repair should be of such quality that the operating parameters, pressure, temperature, and safety factors are not reduced. The Duo-Pro and Fluid-Lok systems offer this capability for all pressure ratings with minimum disruption to site conditions.

The first step in a repair procedure is to isolate the leak source. The ease of finding a leak is determined by the leak detection method selected at the time of installation. The use of a leak detection cable will pinpoint the location of the leak to plus or minus three feet, and is possibly the most efficient system. The low-point sensors will identify a zone that has been contaminated. Further testing methods will be required to locate the actual leak source. Several methods are available for this, including the use of an ultrasonic test gun (Figure F-99), fiber optic cameras, and dye solutions. These methods, although more time consuming, are viable alternatives to leak detection cable.

The second step in a repair procedure is to flush the carrier and containment pipes to remove any hazardous chemicals that will create safety concerns for the workers doing the repairs. The ability to flush the system is determined by the initial design. The installation of high-point vents and low-point drains in the containment pipe will provide a safe means to perform the flushing. Attempts to install high-point vents and low-point drains during repair are costly and potentially dangerous.

To completely weld a system repair, the pipe must be flexible in movement in the axial direction. If movement is not present, then a double-wall flange repair may prove convenient. Double-wall flanges may have reduced pressure ratings. Consult factory prior to installation.

The third step is to expose the damaged pipe and perform the repair procedure with one of the following methods.

P.O. Box 653 • 35 Green Street, Malden, MA 02148 • Tel: (800) 343-3618, (781) 321-5409
Fax: (800) 426-7058 • Internet: http://www.asahi-america.com • Email: asahi@asahi-america.com

Repairs to Systems without Flexibility

Flanged Repairs (similar materials)

Duo-Pro and Poly-Flo systems offer patented, double-wall flanges that permit the flow of fluids through the annular space, as shown in Figure F-100. (Consult factory for pressure rating.)

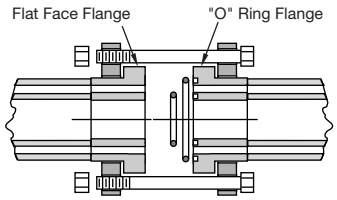

Figure F-100. Double-wall flange

1. The damaged section of pipe is removed first (Figure F-101).

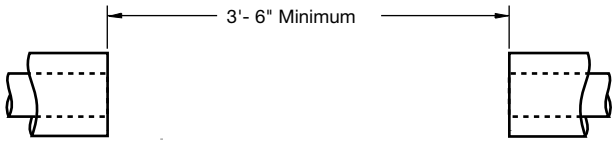

Figure F-101. Remove damaged section of pipe

2. Plane ends and install supports discs. Next, weld two flanges onto the exposed pipe ends.

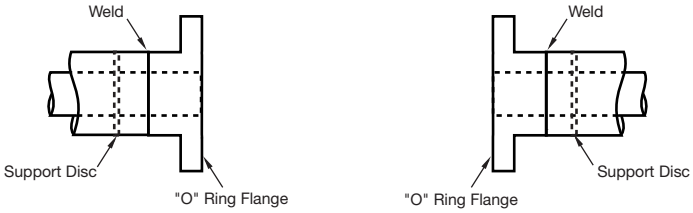

Figure F-102. Install double-wall flanges

3. A flanged spool piece is fabricated and installed.

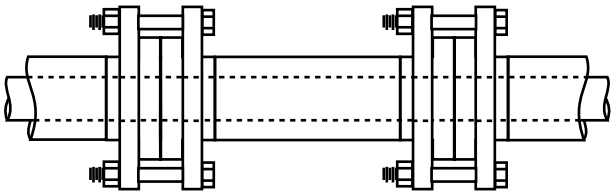

Figure F-103. Install flanged spool

4. The system is then tested and returned to working order.

For all repair methods, a minimum of 3'- 6" is required to facilitate use of welding equipment.

Repairs to Systems with Flexibility

Butt-Fusion Repairs (similar materials)

The second method of repair is performed without the use of flanges but instead, only with thermal butt fusion. The use of butt fusion, as the repair procedure requires a larger excavation due to the requirement that the pipe be able to move at least three inches to perform the weld.

To perform the repair:

1. The damaged section of pipe is removed and the area cleared to allow the pipe to move in the radial direction. Note that only one end of the pipe needs this flexibility (Figure F-104).

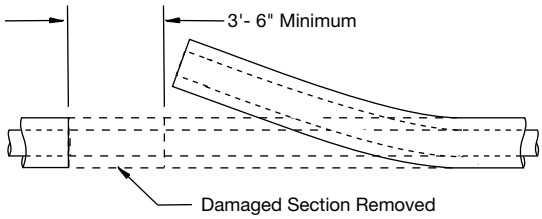

Figure F-104. Remove damaged section of pipe

2. The pipe in the ground is prepared for simultaneous fusion.

3. A spool of pipe is assembled and butt welded to the stationary pipe.

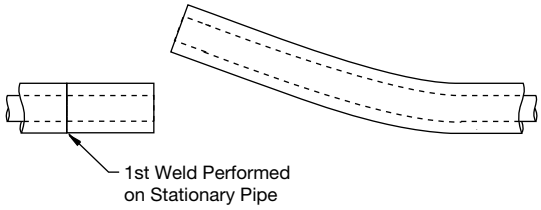

Figure F-105. Install new spool

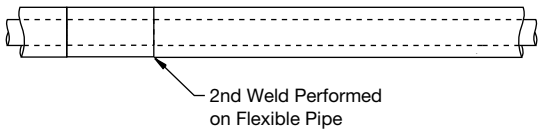

Figure F-106. Butt weld spool to remaining pipe

4. The second weld is then performed on the flexible side.

5. The system is then tested and returned to working order.

F

The repair procedures described above are appropriate for Duo-Pro and Poly-Flo systems when the same material is used for the carrier and containment piping. To perform a repair on a system with a PVDF carrier and a polypropylene containment, the following steps should be followed.

Repairing PVDF Carrier/Polypropylene Containment (Duo-Pro only)

Flanged Repairs (dissimilar materials)

To perform the repair:

1. The damaged section of pipe is removed and prepared.

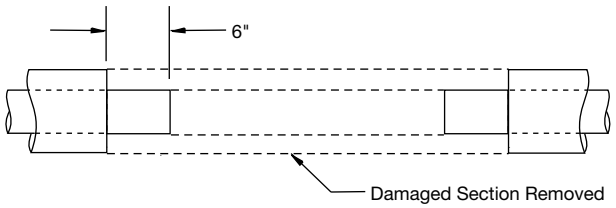

Figure F-107. Remove damaged section of pipe

2. Polypropylene flanges are welded to the containment pipe.

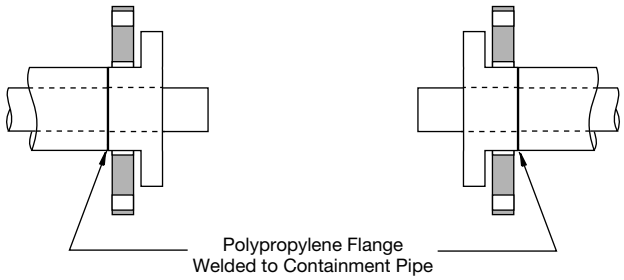

Figure F-108. Weld polypropylene flanges to pipe ends

3. PVDF flanges are bolted to the polypropylene flanges. Now both the inner and outer piping are similar material.

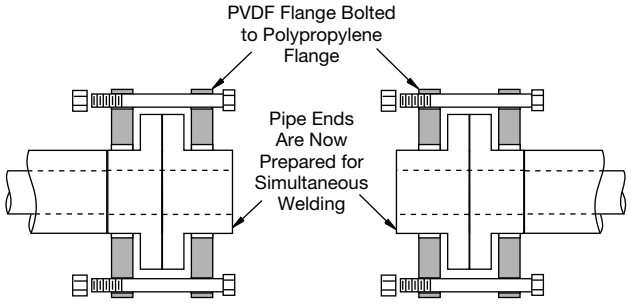

Figure F-109. Bolt polypropylene flanges to PVDF flanges

4. The repair procedure is now the same as for similar materials, as described above.

There are other repair options available that require the use of slip couplings, electro-fusion couplings, and use of hot-gas welding and extrusion welding. These repair options are adequate for drainage systems only and require well-trained technicians to perform the repair. Consult the Asahi/America Engineering Department for assistance.

P.O. Box 653 • 35 Green Street, Malden, MA 02148 • Tel: (800) 343-3618, (781) 321-5409
Fax: (800) 426-7058 • Internet: http://www.asahi-america.com • Email: asahi@asahi-america.com

DEPARTMENT OF THE ARMY
ALBUQUERQUE DISTRICT, CORPS OF ENGINEERS
ALBUQERQUE DISTRICT OFFICE
4101 JEFFERSON PLAZA NE
ALBUQUERQUE, NM 87109

SUBMITTAL REVIEW VERIFICATION SHEET

PROJECT TITLE: Kirtland BFF Mid-Plume Pump and Treat System Expansion
CONTRACT NUMBER: W912DR-12-D-0006 DM01
DATE RECEIVED: 7-26-2017
DATE REVIEWED: 7-28-2017

DESCRIPTION OF ITEMS REVIEWED:

1. Bilco Hatches

NO EXCEPTIONS TAKEN.	**X**
EXCEPTIONS AS NOTED ON DRAWINGS AND/OR ATTACHED SHEETS(S). RESUBMISSION NOT REQUIRED.	
EXCEPTIONS AS NOTED ON DRAWINGS AND/OR ATTACHED SHEETS(S). RESUBMISSION REQUIRED.	
RECEIPT ACKKNOWLEDGED.	

Notes:

NOTE: ITEMS REVIEWED AS TO GENERAL LAYOUT ONLY. DIMENSIONS AND QUANTITIES NOT CHECKED. REVIEW DOES NOT RELIEVE CONTRACTOR OF RESPONSIBILITIES FOR ANY ERRORS WHICH MAY EXIST AS CONTRACTOR SHALL BE RESPONSIBLE FOR DIMENSIONS AND DESIGN OF ADEQUATE CORRECTIONS, DETAILS AND SATISFACTORY CONSTRUCTION OF WORK.

SIGNATURE _____ **DATE** 7/28/2017

EA Engineering, Science, and Technology, Inc., PBC

Submittal Review Sheet 1

Project Name: **Kirtland BFF Mid-Plume Pump and Treat System Expansion**				Date Received: **7/20/17**			
Project Owner: **Kirtland Air Force Base**				Checked By: **Tyler Curley**			
Contractor: **RMCI, Inc.**	Engineer: **EA Engineering, Science and Technology, Inc., PBC.**			Log Page: **NA**			
Address: **6211 Chappell Rd NE, Albuquerque, NM 87113**	Address: **320 Gold Ave. SW, Suite 1300 Albuquerque, NM 87102**			EA No.: 62599DM01			
				Spec. Section: **00 00 00 - Items called out on the plans. No specs**			
				Drawing/Detail No.: **S-101**			
ATTN: Philip Johnson	ATTN: **Devon Jercinovic**			1st Sub		Re-Sub	
Date Transmitted: **07/20/2017**	Prev. Transmittal Date:						
Item No.	No. Copies	Description	Manufacturer	Mfg/Vendor Dwg or Detail		Action Taken*	
1	1	Bilco Hatches	HD Supply Waterworks, Ltd.			A	

The Action Designated Above is in Accordance with the Following Legend:

A – Furnish as Submitted
B – Furnish as Noted
C – Revise and Re-submit
1. Not enough information for review.
2. No reproducible submitted.
3. Copies illegible.
4. Not enough copies submitted.
5. Wrong sequence number.
6. Wrong resubmittal number.
7. Wrong Spec. Section.
8. Wrong form used.
9. See Comments.

D – Rejected
E – Engineer's Review not Required
1. Submittal not required.
2. Supplemental Information. Submittal retained for Information purposes only.
3. Information reviewed and approved on prior submittal.
4. See Comments.

Review is for general compliance with Contract Documents. No responsibility is assumed for correctness of dimensions or detail. Contractor is required to specify deviations from contract requirements. Lack of exceptions noted by Engineer does not waive Contractor's obligation to comply with Drawings and Specifications.

Comments:
Items reviewed and confirmed to meet requirements
(Reviewed Material in Parentheses)
Issues in Bold

- Vault hatches meet specifications and dimensions of pre-cast vault drawings.

By: _____ Date: 7-25-17

EA Engineering, Science, and Technology, Inc., PBC

Distribution: [1] Contractor [1] Engineer [1] Owner

Junction Vaut, Qty 1

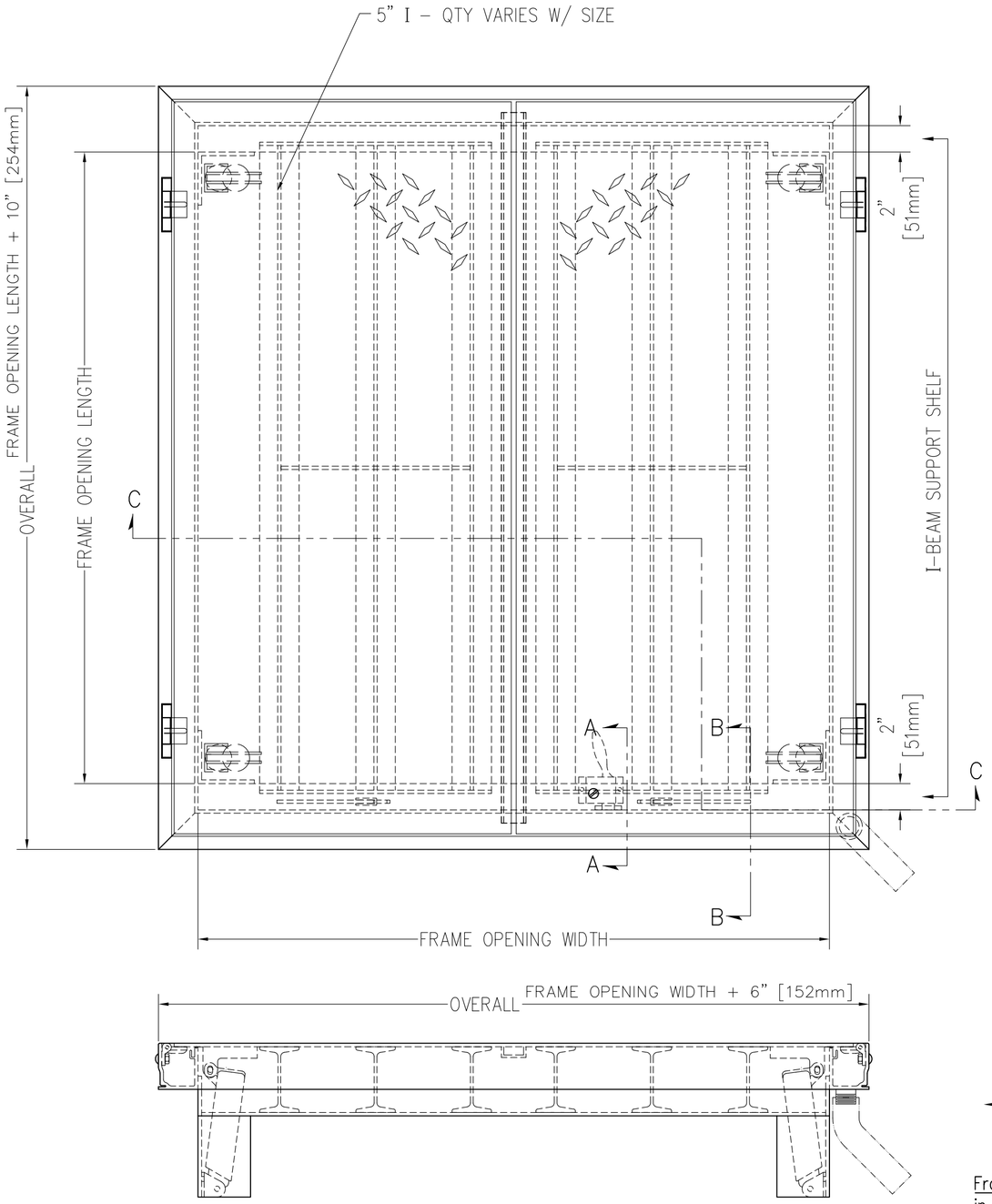

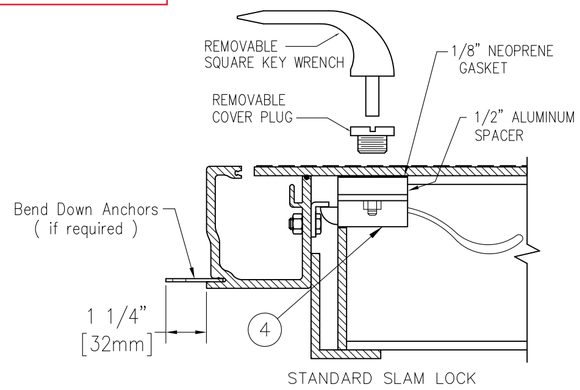

SECTION A–A

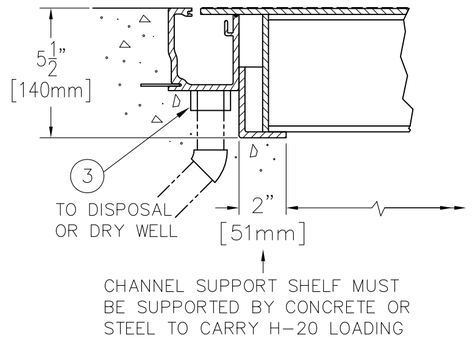

SECTION B–B

NOTE:
DESIGNED TO WITHSTAND H–20 WHEEL LOADINGS SUITABLE FOR USE IN OFF–STREET LOCATIONS WHERE NOT SUBJECTED TO HIGH DENSITY TRAFFIC

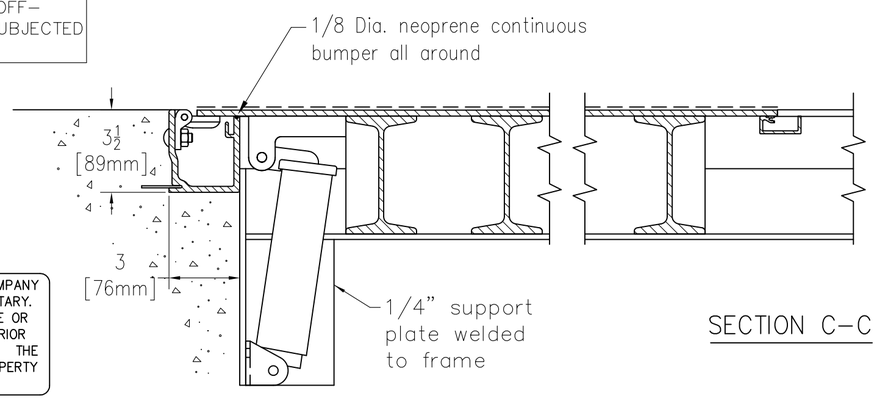

SECTION C–C

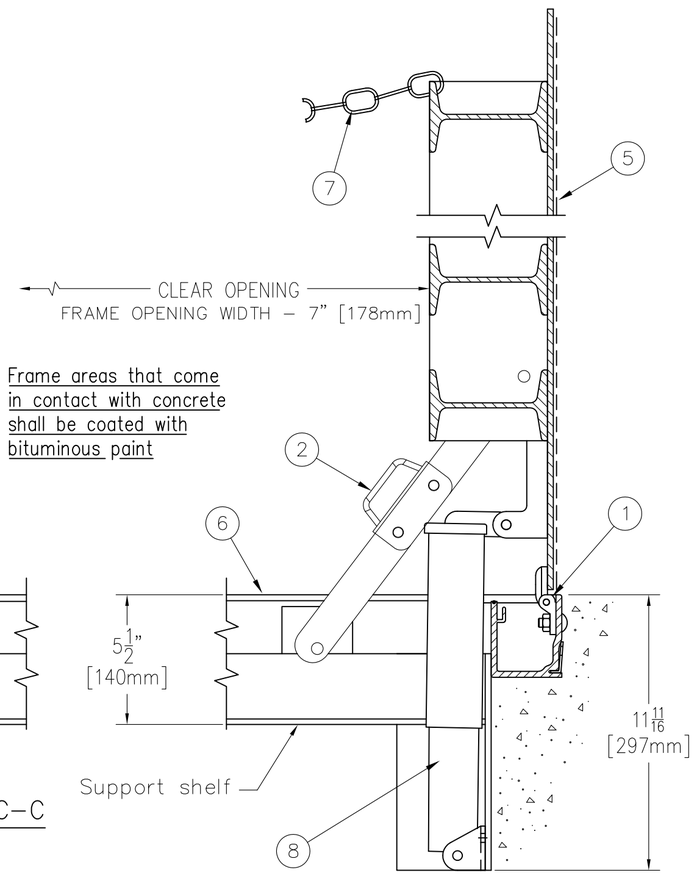

THIS DRAWING IS THE PROPERTY OF THE BILCO COMPANY AND INCORPORATES INFORMATION WHICH IS PROPRIETARY. PUBLICATION AND/OR PUBLIC DISTRIBUTION IN WHOLE OR IN PART IS EXPRESSLY PROHIBITED WITHOUT THE PRIOR WRITTEN CONSENT OF THE BILCO COMPANY. THE INFORMATION CONTAINED HEREIN REMAINS THE PROPERTY OF THE BILCO COMPANY. ALL RIGHTS RESERVED.

SPECIFICATIONS

1. Bilco heavy duty forged stainless steel hinges with stainless steel pins
2. Bilco automatic hold open arm
3. 1–1/2" drain coupling
4. Standard slam lock
5. 1/4" aluminum diamond pattern plate cover
6. Bilco 1/4" aluminum channel frame with recessed anchors
7. Heavy duty check chain
8. Stainless steel lifting mechanism

SHOP FINISH:
ALUMINUM: MILL FINISH
HARDWARE: TYPE 316 STAINLESS STEEL
(unless otherwise specified)

REINFORCED FOR H20 LOADING

INSTALLER NOTES:

A. Use caution. Cover is spring loaded. Do not remove safety shipping bolt until unit is to be installed and in normal horizontal operating position.
B. Be sure unit is set on slight pitch toward drain corner.
C. Before anchoring in place open and close door. Check to see that the door in the closed position rests on the frame all around. If not, shim under the frame at the proper corner.
D. Do not reduce 1 1/2" drain pipe to dry well or disposal system.
E. Bend down anchors if required

Customer:

P.O. N°

Job:

Sales Rep:

Manufacturers of Doors for Special Services
Bilco® THE BILCO COMPANY
New Haven, Connecticut 06505

DOUBLE LEAF ACCESS DOOR
TYPE JD-ALH20 - EXTERIOR

QTY	TYPE	SIZE WIDTH x LENGTH
☐	JD-1ALH20	4'-0" x 2'-6" [1220mm] x [762mm]
☐	JD-2ALH20	4'-0" x 4'-0" [1220mm] x [1220mm]
☐	JD-3ALH20	4'-0" x 6'-0" [1220mm] x [1830mm]
☐	JD-4ALH20	5'-0" x 5'-0" [1525mm] x [1525mm]

© 11-16-09 THE BILCO COMPANY

Well Head Vault, Qty 2

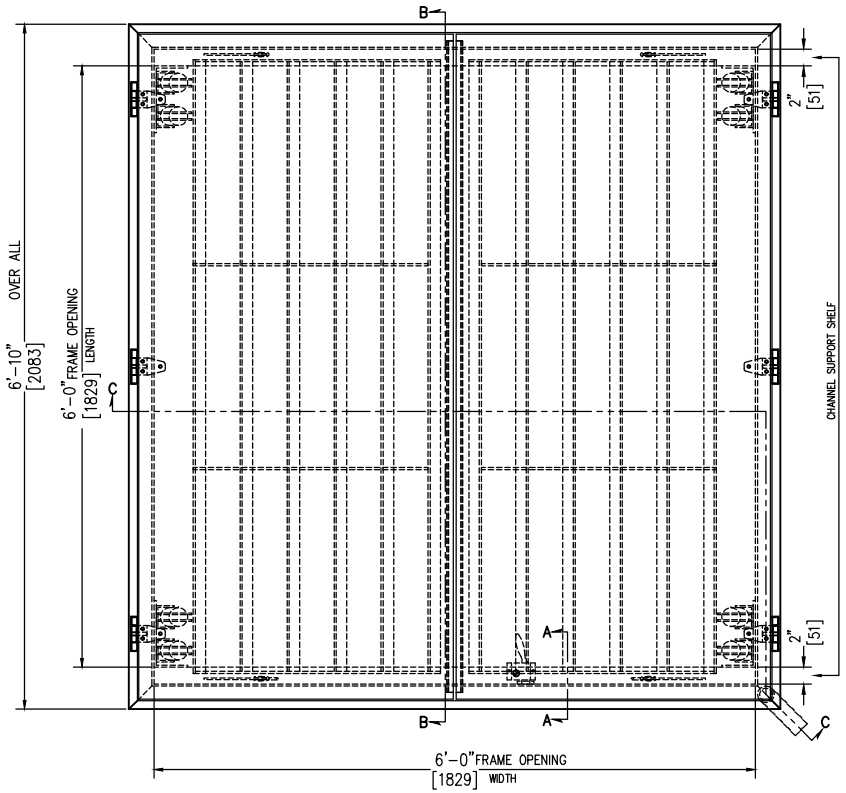

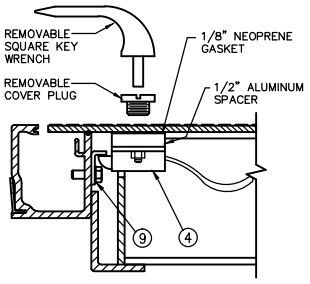

SECTION A-A
STANDARD SLAM LOCK

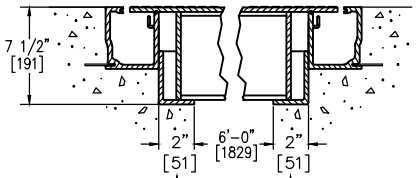

CHANNEL SUPPORT SHELF MUST BE SUPPORTED BY CONCRETE OR STEEL TO CARRY H-20 LOADING

SECTION B-B

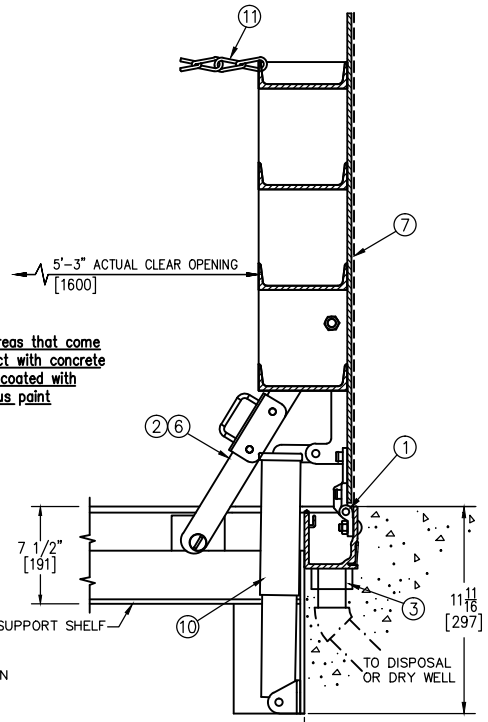

Frame areas that come in contact with concrete shall be coated with bituminous paint

NOTE:
DESIGNED TO WITHSTAND H-20 WHEEL LOADINGS SUITABLE FOR USE IN OFF-STREET LOCATIONS WHERE NOT SUBJECTED TO HIGH DENSITY TRAFFIC

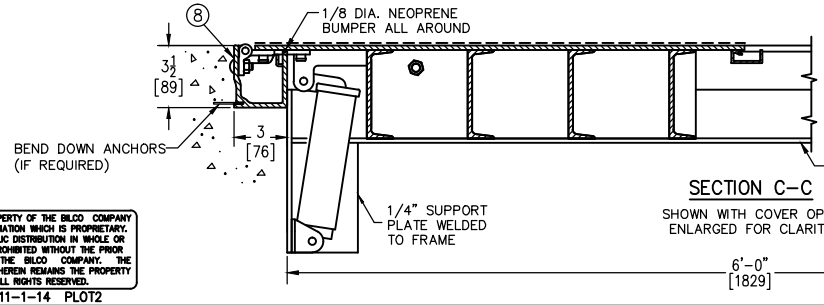

SECTION C-C
SHOWN WITH COVER OPEN
ENLARGED FOR CLARITY

SPRINGS 2 @ 300 & 2 @ 400

THIS DRAWING IS THE PROPERTY OF THE BILCO COMPANY AND INCORPORATES INFORMATION WHICH IS PROPRIETARY. PUBLICATION AND/OR PUBLIC DISTRIBUTION IN WHOLE OR IN PART IS EXPRESSLY PROHIBITED WITHOUT THE PRIOR WRITTEN CONSENT OF THE BILCO COMPANY. THE INFORMATION CONTAINED HEREIN REMAINS THE PROPERTY OF THE BILCO COMPANY. ALL RIGHTS RESERVED.

JD-HN_AL 11-1-14 PLOT2

Sym.	Revision	Date	By
A	New Release	7-14-17	root

SPECIFICATIONS:

1. Bilco heavy duty forged stainless steel hinges with stainless steel pins
2. Guide arm (if req'd)
3. 1-1/2" drain coupling
4. Standard slam lock
5.
6. Bilco automatic lock open arm
7. 1/4" aluminum diamond pattern plate cover
8. Bilco 1/4" aluminum channel frame with recessed anchors
9. Stainless steel lock strike
10. Stainless steel spring lifting mechanism
11. Heavy duty check chain

INSTALLER NOTES:

A. Use caution. Cover is spring loaded. Do not remove safety shipping bolt until unit is to be installed and in normal horizontal operating position.
B. Be sure unit is set on slight pitch toward drain corner.
C. Before anchoring in place open and close door. Check to see that the door in the closed position rests on the frame all around. If not, shim under the frame at the proper corner.
D. Do not reduce 1 1/2" drain pipe to dry well or disposal system.
E. Bend down anchors if required

(1) UNIT(S) REQUIRED AS SHOWN (Aluminum Weldment)
COVER REINF. FOR H-20 LOADING

SHOP FINISH:
COVER: MILL FINISH
FRAME: MILL FINISH
HARDWARE: STAINLESS STEEL TYPE 316 (UNLESS OTHERWISE SPECIFIED)

Customer: HD SUPPLY WATERWORKS ALBUQUERQ
ALBUQUERQUE NM 64TH ST
WACO, TX 76714

P.O. N°

Job:

Builder:

Architect:

Engineer:

Sales Rep: MOUNTAIN WEST SALES INC.
2718 UNIVERSITY BLVD NE
ALBUQUERQUE, NM 87107

Manufacturers of Doors for Special Services
THE BILCO COMPANY
New Haven, Connecticut 06505

TYPE "JD"- (H20) ALUMINUM DOUBLE LEAF ACCESS DOOR - SIZE 6'-0" x 6'-0" [1829mm x 1829mm]

Drawn By	Date	Drawing No.	Rev.
CAD	7-14-17	JD-X10172	A
SHEAR	Scale DO NOT SCALE		

DEPARTMENT OF THE ARMY
ALBUQUERQUE DISTRICT, CORPS OF ENGINEERS
ALBUQERQUE DISTRICT OFFICE
4101 JEFFERSON PLAZA NE
ALBUQUERQUE, NM 87109

SUBMITTAL REVIEW VERIFICATION SHEET

PROJECT TITLE: Kirtland BFF Mid-Plume Pump and Treat System Expansion
CONTRACT NUMBER: W912DR-12-D-0006 DM01
DATE RECEIVED: 8-02-2017
DATE REVIEWED: 8-02-2017

DESCRIPTION OF ITEMS REVIEWED:

1. Directional Drill Conduit

NO EXCEPTIONS TAKEN.	**X**
EXCEPTIONS AS NOTED ON DRAWINGS AND/OR ATTACHED SHEETS(S). RESUBMISSION NOT REQUIRED.	
EXCEPTIONS AS NOTED ON DRAWINGS AND/OR ATTACHED SHEETS(S). RESUBMISSION REQUIRED.	
RECEIPT ACKKNOWLEDGED.	

Notes:

NOTE: ITEMS REVIEWED AS TO GENERAL LAYOUT ONLY. DIMENSIONS AND QUANTITIES NOT CHECKED. REVIEW DOES NOT RELIEVE CONTRACTOR OF RESPONSIBILITIES FOR ANY ERRORS WHICH MAY EXIST AS CONTRACTOR SHALL BE RESPONSIBLE FOR DIMENSIONS AND DESIGN OF ADEQUATE CORRECTIONS, DETAILS AND SATISFACTORY CONSTRUCTION OF WORK.

SIGNATURE _____ DATE 8/2/17

EA Engineering, Science, and Technology, Inc., PBC

Submittal Review Sheet 1

Project Name: **Kirtland BFF Mid-Plume Pump and Treat System Expansion**				Date Received: **8/1/17**		
Project Owner: **Kirtland Air Force Base**				Checked By: **Tyler Curley**		
Contractor: **RMCI, Inc.**	Engineer: **EA Engineering, Science and Technology, Inc., PBC.**			Log Page: **NA**		
Address: **6211 Chappell Rd NE, Albuquerque, NM 87113**	Address: **320 Gold Ave. SW, Suite 1300 Albuquerque, NM 87102**			EA No.: **62599DM01**		
				Spec. Section: **No Specs**		
				Drawing/Detail No.: **No Drawing**		
ATTN: **Phillip Johnson**	ATTN: **Devon Jercinovic**			1st Sub		Re-Sub
Date Transmitted: **08/01/2017**	Prev. Transmittal Date:					

Item No.	No. Copies	Description	Manufacturer	Mfg/Vendor Dwg or Detail	Action Taken*
1	1				

The Action Designated Above is in Accordance with the Following Legend:

A – Furnish as Submitted
B – Furnish as Noted
C – Revise and Re-submit
1. Not enough information for review.
2. No reproducible submitted.
3. Copies illegible.
4. Not enough copies submitted.
5. Wrong sequence number.
6. Wrong resubmittal number.
7. Wrong Spec. Section.
8. Wrong form used.
9. See Comments.

D – Rejected
E – Engineer's Review not Required
1. Submittal not required.
2. Supplemental Information. Submittal retained for Information purposes only.
3. Information reviewed and approved on prior submittal.
4. See Comments.

Review is for general compliance with Contract Documents. No responsibility is assumed for correctness of dimensions or detail. Contractor is required to specify deviations from contract requirements. Lack of exceptions noted by Engineer does not waive Contractor's obligation to comply with Drawings and Specifications.

Comments:
Items reviewed and confirmed to meet requirements
(Reviewed Material in Parentheses)
Issues in Bold

-

By: _____ Date: 8/1/2017

Distribution: [1] Contractor [1] Engineer [1] Owner

UNITED POLY SYSTEMS

C O N D U I T

Applications include:

Telecom, Energy, DOT, Etc.

Installation:

Existing Conduit, Plow, Direct Burial,
HDD (Horizontal Directional Drilling)

- Product may be striped for a number of different indicators
- Product is manufactured in IPS (iron pipe size) and DIPS (ductile iron pipe size 4" and up). Product available in ¾" to 16" diameters
- The material requirements for PE conduit shall be classified in accordance with ASTM Standard D 3350 "Standard Specification for Polyethylene Plastic Pipe and Fittings Materials". ASTM D 3350 defines important physical properties of HDPE materials into ranges, or cell classes, so that each property can be defined within a range that is appropriate for the application.
- For HDPE conduit according to ASTM F 2160, the High Density Polyethylene material is defined as noted below:

Property	Range or Minimum Requirement	Units	Cell Class	Test Method
Density	0.941-0.955	g/cc	3	ASTM D 792 or 1505
Melt Index [a]	<0.25-0.40	g/10 minutes	3or4	ASTM D 1238
Flexural Modulus	110,000-160,000	Psi	4or5	ASTM D 790
Tensile Strength	3000-4000	Psi	4or5	ASTM D 638
Environmental Stress Crack Resistance [b]	F20>192	Hours (condition C)	3or4	ASTM D 1693
HDB	Not Defined		0,1,2,3,or 4	ASTM D2837

*Nominal values are to be used as guidelines only; this is not a product specification and does not indicate minimum or maximum values.

4707 E. Kearney, Springfield, MO 65803 • 417.708.9887 • www.unitedpolysystems.com

Print line

The duct product shall be sequentially marked and identified along its outer length in contrasting color. The print interval shall be every two feet and shall include the following:

MANUFACTURER'S NAME: United Poly Systems

PRODUCT SIZE/SDR

PRODUCTION CODE (Date, Location, Period)

SPECIFICATION

LENGTH OF CONDUIT (in feet) on reel

Optional custom print lines are available and may include customer name, project name, application etc.

Minimum Order Quantities

Minimum order quantities are as follows:

Size (in)	Color	Minimum (ft)
¾”	Any	2500
1”	Any	2500
1 ¼”	Orange or Black	2000
1 ¼”	Other	3000
1 ½”	Orange or Black	1500
1 ½”	Other	2500
2”	Orange or Black	1000
2”	Other	2000
2 ½”	Orange or Black	2500
2 ½”	Other	5000
3”	Orange or Black	1000
3”	Other	2000
4”	Orange or Black	500
4”	Other	750
	Ducts larger than 4”diameter offered in black or w/stripes only	
5”		1000
6”		900
8”		560
10”		560
12”		480
14”		560
16”		480

Reel Dimensions

Standard dimensions for United Poly Systems reels are as follows:

All reels come in a standard 48” width unless otherwise requested by customer. Standard common reel diameters are 48”, 66”, 72”, 83” 96”, 102”, 114” and 120”.

Segmented reels are also available in 2-way, 3-way or 4-way configurations. United Poly Systems does not currently parallel wrap duct.

¾” and 1” size ducts are wrapped to a preferred diameter reel size of 48”, 66” or 72”.

6” duct is offered on 450’ 120” reels or in coils of 500’

United Poly Systems will not coil 4” schedule 40 HDPE pipe due to the potential for compromise of product integrity.

Options

- Straight longitudinal internal ribbing is available for all pipes 2” and below.
  - ***UNIFORM STRAIGHT INTERNAL RIBS SPANNING THE LENGTH OF THE PIPE***
- Optional custom print lines are available and may include customer name, project name, application, lightning bolt etc.
- Pull tape is offered in a number of tensile strengths. United Poly Systems standard pull tape is an 1130# strength, while other options include strengths from 200# to 2500#.
- Segmented reels are available in 2-way, 3-way or 4-way configurations. United Poly Systems does not currently parallel wrap duct.
- A number of colors and stripes are offered to customize the product to the customer’s needs. United Poly Systems offers orange, blue, black, red, gray, white, green, yellow, terracotta, violet, brown, lilac, and custom colors upon customer’s request.

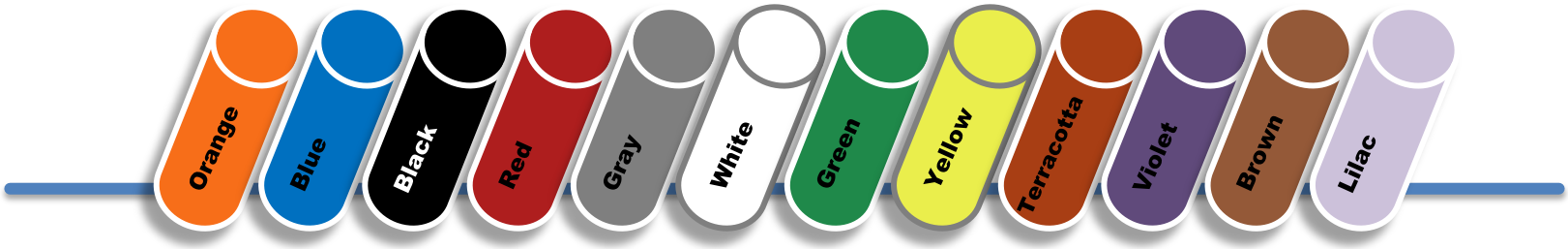

Custom colors available upon request

Coil Sizes

Standard coil lengths are as follows:

Size (in)	Standard Coil Footages (ft)	Quantity per pallet	Coil ID(in)	Coil Width (in)
¾”	500 - 1000	8	30	10 - 20
1”	500 - 1000	7 - 5	30	11 - 20
1 ¼”	500 - 1000	5 - 3	30	16 - 29.5
1 ½”	500 - 1000	8 - 6	51 - 51	13.5 - 16
2”	500 - 1000 - 1500 - 2000	7 - 4 - 3 - 3	51 - 51 - 51 - 51	14 - 22.5 - 28 - 32
3”	500 - 1000	4 - 2	69.5 - 69.5	23.5 - 45
4”	500 - 600 - 800	3 - 2 - 2 - 2	69.5 - 70 - 69.5	31 - 48 - 49
5”	500	2	84	50
6”	450	2	84	50

Internal Ribbing

United Poly Systems is proud to offer HDPE duct with longitudinal internal ribbing for ¾” to 2” diameters. Ribbed duct offers a way to maximize the distance cable may be pulled and jetted into conduit. The internal ribs help to reduce the coefficient of friction within that particular pipe. Air may flow more readily around the cable and contact with the wall of the duct is reduced thereby reducing friction and simplifying instillation. Inside ribbed duct is available up to 6’ diameter conduit. Ribbed conduit is offered on segmented reels with or without any of our pre-installed pull tape options and can be manufactured in any solid color or striping.

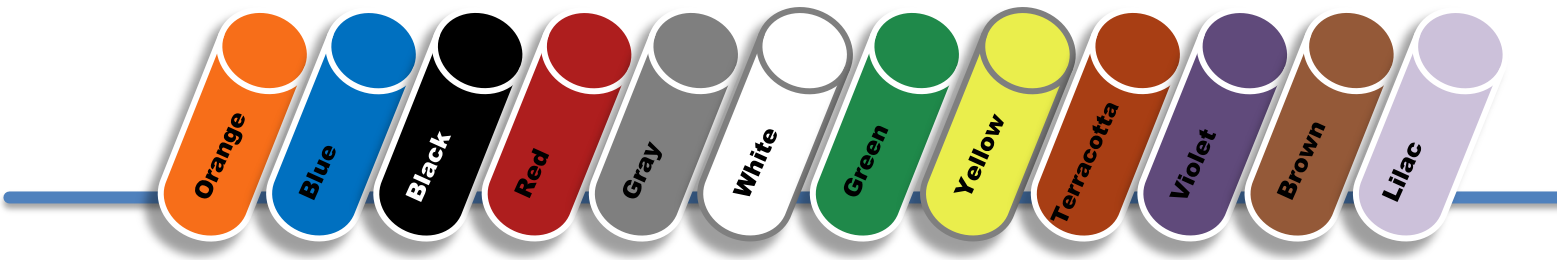

Custom colors available upon request

4707 E. Kearney, Springfield, MO 65803 • 417.708.9887 • www.unitedpolysystems.com

Notes

¬ Ovality of 2 inch and smaller conduit shall not exceed 7% off the coil. Coiled conduit larger than 2 inch through 3 inch IPS shall not exceed 10%. Ovality in coiled 4 inch and greater diameter conduit and casing is largely a packaging condition where greater than 15% ovality shall be corrected in
the field by processing the roundable conduit through re-rounding and straightening equipment during installation. Straight lengths of conduit shall have ovality of 5% or less.
PPI. *HDPE Solid Wall Conduit Model Specification Power and Communications Conduit and Casing*. Tech. no. MS-5. 2008.

¬ HDPE conduit will ovalize when it is coiled, and after a period of time,will set into the coiled state. A residual curve is normal for all coiled HDPE duct products. Since larger duct is coiled into a relatively tighter bending radius, residual curvature and ovality is greater for larger diameters. Some couplers may be affected by ovalized duct, along with installations where cable-fill ratios reach near capacity, or where larger diameter cables are being placed. Residual curvature and ovality may be corrected in the field by running the entire coil through rerounding and straightening equipment during installation.

¬ **Schedule 40 HDPE conduit through 3" has a wall thickness greater than SDR 15.5. Schedule *40 HDPE conduits in diameters above 3" and Schedule 80 in 6" have wall thickness ranges that are less than SDR 15.5. United Poly Systems will not offer these sizes in continuous coils to preserve pipe integrity and limit ovality*.**

¬ "All HDPE pipes produced under ASTM D3035, F714, D2447, D2239 and D2737 specifications are suitable for the transport of liquids, including water, fluid chemicals, effluents, municipal sewage, etc. The user should consult with the HDPE pipe manufacturer to determine whether the composition of the liquid material being transported is compatible with polyethylene pipe so as not to affect the service life below limits acceptable to the user."
PPI. Resistance of Solid Wall Polyethylene Pipe to a Sanitary Sewage Environment. Tech. no. 15. 2009.

¬ **Pressure Rating (psig) Comparison Between PE 4710 and PE 3408 for Water Applications**

	DR 9	DR 11	DR 13.5	DR 17
PE 4710	252	202	161	126
PE 3408	200	160	128	100

¬ **RECOMMENDED COLOR CODE**

This color code is only intended for solid wall pipe used outside of buildings

Color or Stripe Color	Solid Wall Piping Application
Red	Electric power lines, cable, conduit, and lighting cables
Orange	Telecommunication, alarm or signal lines, cables, or conduit
Yellow	Fuel gas (methane or propane), oil, petroleum, steam, or gaseous materials
Green	Sewers and drain lines
Blue	Potable water
Violet(Purple)	Reclaimed water, irrigation, and slurry lines

The recommended color code provided in this document is consistent with the American Public Works Association (APWA) Uniform Color Code.

DEPARTMENT OF THE ARMY
ALBUQUERQUE DISTRICT, CORPS OF ENGINEERS
ALBUQERQUE DISTRICT OFFICE
4101 JEFFERSON PLAZA NE
ALBUQUERQUE, NM 87109

SUBMITTAL REVIEW VERIFICATION SHEET

PROJECT TITLE: Kirtland BFF Mid-Plume Pump and Treat System Expansion
CONTRACT NUMBER: W912DR-12-D-0006 DM01
DATE RECEIVED: 8-02-2017
DATE REVIEWED: 8-02-2017

DESCRIPTION OF ITEMS REVIEWED:

1. Concrete Mix Design

NO EXCEPTIONS TAKEN.	**X**
EXCEPTIONS AS NOTED ON DRAWINGS AND/OR ATTACHED SHEETS(S). RESUBMISSION NOT REQUIRED.	
EXCEPTIONS AS NOTED ON DRAWINGS AND/OR ATTACHED SHEETS(S). RESUBMISSION REQUIRED.	
RECEIPT ACKKNOWLEDGED.	

Notes:

NOTE: ITEMS REVIEWED AS TO GENERAL LAYOUT ONLY. DIMENSIONS AND QUANTITIES NOT CHECKED. REVIEW DOES NOT RELIEVE CONTRACTOR OF RESPONSIBILITIES FOR ANY ERRORS WHICH MAY EXIST AS CONTRACTOR SHALL BE RESPONSIBLE FOR DIMENSIONS AND DESIGN OF ADEQUATE CORRECTIONS, DETAILS AND SATISFACTORY CONSTRUCTION OF WORK.

SIGNATURE _____ **DATE** 8/2/2017

EA Engineering, Science, and Technology, Inc., PBC

Submittal Review Sheet 1

Project Name: **Kirtland BFF Mid-Plume Pump and Treat System Expansion**			Date Received: **8/1/17**
Project Owner: **Kirtland Air Force Base**			Checked By: **Tyler Curley**
Contractor: **RMCI, Inc.**	Engineer: **EA Engineering, Science and Technology, Inc., PBC.**		Log Page: **NA**
Address: **6211 Chappell Rd NE, Albuquerque, NM 87113**	Address: **320 Gold Ave. SW, Suite 1300 Albuquerque, NM 87102**		EA No.: 62599DM01
			Spec. Section: **No Specs**
			Drawing/Detail No.: **No Drawing**
ATTN: Philip Johnson	ATTN: **Devon Jercinovic**	1st Sub	Re-Sub
Date Transmitted: **08/01/2017**	Prev. Transmittal Date:		

Item No.	No. Copies	Description	Manufacturer	Mfg/Vendor Dwg or Detail	Action Taken*
1	1	Concrete Mix Design	Duke City Redi Mix		A

The Action Designated Above is in Accordance with the Following Legend:

A – Furnish as Submitted
B – Furnish as Noted
C – Revise and Re-submit
1. Not enough information for review.
2. No reproducible submitted.
3. Copies illegible.
4. Not enough copies submitted.
5. Wrong sequence number.
6. Wrong resubmittal number.
7. Wrong Spec. Section.
8. Wrong form used.
9. See Comments.

D – Rejected
E – Engineer's Review not Required
1. Submittal not required.
2. Supplemental Information. Submittal retained for Information purposes only.
3. Information reviewed and approved on prior submittal.
4. See Comments.

Review is for general compliance with Contract Documents. No responsibility is assumed for correctness of dimensions or detail. Contractor is required to specify deviations from contract requirements. Lack of exceptions noted by Engineer does not waive Contractor's obligation to comply with Drawings and Specifications.

Comments:
Items reviewed and confirmed to meet requirements
(Reviewed Material in Parentheses)
Issues in Bold

4,000 PSI concrete conforming to COA specifications for exterior structures.

By: _____ Date: 8/1/17

Distribution: [1] Contractor [1] Engineer [1] Owner

CITY OF ALBUQUERQUE

Department of Municipal Development
Melissa R. Lozoya, P.E., Acting Director

February 2, 2017

Duke City Redi Mix
P.O. Box 250
Moriarty, NM 87035

Attention: Mr. Miles Shiver, General Manager

Subject: Review and Evaluation of the Request for Authorization Period for Portland Cement Concrete Submittal, December 21, 2016; CA² Testing, December 21, 2016; and Sampled December 19, 2016.

CODES	APPLICATION(S)	f'c @ 28 days, psi
50.17	Interior Concrete	3,000
51.17	Hydraulic Structures	3,500
→ 52.17	Structures	4,000
54.17	Sanitary Sewer	4,000
55.17	Exterior Concrete	3,000
56.17	Exterior Concrete, Slip Formed	3,000
57.17	High Early Release	4,000 psi @ 7 days
59.17	Lean Fill	N/A

PO Box 1293

Albuquerque

New Mexico 87103

www.cabq.gov

Sir:

The City of Albuquerque Department of Municipal Development Street Maintenance Division has reviewed and evaluated the subject Portland Cement Concrete Submittal for authorization for the period of 2017-2018. The review and evaluation were conducted in order to verify compliance with the requirements of the City of Albuquerque Standard Specifications for Public Works Construction, 1986 Edition, Updates 1-9. The submittal's authorization may be extended for a period of fourteen (14) months from latest date of sampling of the aggregates, assuming, (1) if there are no changes in materials and/or suppliers, (2) the production concrete performance complies with the requirements of the reference submittal design mixes, (3) the design mixes are produced at a ready mix plant and/or transit mix trucks certified to comply with the requirements of SECTION 101-PORTLAND CEMENT CONCRETE. Written plant and transit mix truck certifications shall be made available to for plant(s) and the transit mix trucks for inspection, and submitted to the Engineer upon request.

The design mixes specified in the submittal were proportioned with ASTM C33 aggregates as Orona Pit washed concrete sand, South Valley Pit #89 (3/8" Los Lunas) intermediate and #67 (7/8" Los Lunas) coarse aggregates; Holcim, Florence, Co. Type I-II LA Portland Cement; Salt River Materials 4 Corners, NM, ASTM C 618 Class F fly ash, Sika Plastocrete 161 Water Reducing Admixture and Sika-Air Air-Entraining Admixture.

The fine aggregate failed to meet the grading requirements of ASTM Section 6.1 for the #30 sieve. The intermediate aggregate failed to meet the grading requirements of ASTM C33 Table 3 for the #200 sieve. A variance request for the gradation was included in the submittal.

Based on this review and evaluation, the request for re-authorization for the Portland Cement Concrete Submittal for the 2017-2018 period was determined to comply with the requirements of City of Albuquerque Standard Specifications for Public Works Construction, Updates 1-9, with the included variations. The submittal is authorized for use on City and City related projects for a period of fourteen (14) months from date of sampling, December 19, 2017, to February 19, 2018. *Accelerating, normal range, and high range water reducing admixtures (flowable concrete application(s)), retarding and color admixtures, are not authorized for use in the design mixes included in the submittal and this extension.*

The review and evaluation are only to verify compliance with the design and specification concepts of the City of Albuquerque Standard Specifications for Public Works Construction, 1986 Edition, and **Updates 1-9. It shall not be construed as relieving the Contractor of the full responsibility of providing materials, equipment, and the work required either by a specific contract or contract plans, and/or specification: a) the proper fitting and construction of the work; b) accuracy and completeness of the submittal; c) selecting the fabrication and fabrication techniques of construction; and, d) performing the work in a safe manner.**

This authorization does not relieve the CONTRACTOR of the responsibility to provide the design mixes submittal for use on a specific project for authorization by the ENGINEER. The submittal shall include copies of this authorization, and the authorized design mixes submittal.

submittal may not comply. It is the responsibility of the CONTRACTOR to provide submittals and materials that comply with a CONTRACT.

Authorized by:

S Woodall

Stephen P. Woodall, PE
Pavement & Materials Engineer

Copies: David Harrison, PE, Division Manager, Construction Services
Shahab Biazar, PE, City Engineer, Planning Department
File

Attachments: 1

7705 BROADWAY S.E.
ALBUQUERQUE, NEW MEXICO
P.O. Box 250
Moriarty, NM 87035
PHONE: (505) 877-5777
FAX: (505) 452-0806
DukeCityRediMix@aol.com

December 21, 2016

City of Albuquerque Public Works Dept.
Materials Testing Bureau
Attn: Phillip Romo, P.E.
P.O. Box 1293
Albuquerque, NM 87103

RE: 2017 Portland Cement Concrete Recertification
Submittals for the City of Albuquerque

Attached is certification of Duke City' Redi-Mix's City of Albuquerque mix designs performed by Concrete, Aggregate & Asphalt Testing, LLC for your approval. We trust the submitted items will satisfy the requirements in Section 101-Portland Cement Concrete, City of Albuquerque Standard Specifications for Public Works Construction.

Feel free to contact me at (505) 877-5777 if you need any additional information.

Sincerely,

W M Shiver, III

Miles Shiver
Managing Partner
Duke City Redi-Mix, LLC

CA2 TESTING

PO Box 1228
414 Bibb Industrial Drive
Las Vegas, NM 87701

Phone: 505-718-3030
Fax: 505-425-9159
E-mail: leaann@ca2testing.com

December 21, 2016

Miles Shiver
Duke City Redi Mix
7705 Broadway SE
Albuquerque, NM 87105

RE: 2017 Concrete mix designs recertification as per Section 101 of the City of Albuquerque (CoA) Amendment 1 to Table 101C of Section 101 of the City of Albuquerque Standard Specifications for Public Works Construction Update #8.

Dear Sir,
We have completed the aggregate testing and review analysis has been performed on data obtained and provided on the referenced concrete mixes for recertification for use on projects for 2017 in accordance with the City of Albuquerque Standard Specifications for Public Works Construction – Section 101 and Amendment 1 of Table 101.C – update #8.

The mix performance data for the 3000 and 4000 psi exterior concrete (52.16 & 55.16) mixes were provided by Duke City Redi-Mix and is contained in Appendix A. When current year mix data was not available, data from the original lab design was used. The statistical analysis of the performance data confirms that the original 2009 laboratory trial data is still representative and valid. The strength data for 2016 shows that the mixes performed equal to or better than the original designs and the mixes meet and exceed the necessary overdesign requirements.

The component materials are essentially the same as when the original mixes were established. The coarse and fine aggregates gradation data was reviewed and compared to last years and also to verify that they meet the gradation specification requirements. The fine aggregate failed to meet the grading requirements of ASTM C33 Section 6.1 for the #30 sieve. However, ASTM C33 Section 6.3 states that the fine aggregate shall meet the requirements of Section 6 provided that the supplier can demonstrate to the purchaser or specifier that the class of concrete specified will have relevant properties. Also, the fineness modulus has remained within the 0.20 of the "base fineness modulus". Hence a variation is requested for the fine aggregate grading. The specific gravities of the fly ash and aggregates have changed and the 2017 recommended mix proportions have been adjusted to reflect the changes.

Appendix B contains data and information on the individual constituents: cement, flyash, aggregates and admixtures. A copy of the original mix design submittal is included in Appendix C.

PO Box 1228
414 Bibb Industrial Drive
Las Vegas, NM 87701

Phone: 505-718-3030
Fax: 505-425-9159
E-mail: leaann@ca2testing.com

Based on the items discussed above, including laboratory dry density and compressive strength testing of the lean fill trial batch, certification is hereby given that the Portland cement concrete mixes listed below comply with the City of Albuquerque Standard Specifications for Public Works Construction – Section 101 and Amendment 1 of Table 101.C and Section 207– update #8.

Mix Code	Mix Strength	Mix Use
50.17	3000 psi	Interior concrete (heated areas) foundations and slabs on grade
51.17	3500 psi	Hydraulic structures, storm drain structures & channels and water reservoirs
52.17	4000 psi	Exterior structures, bridges/bridge decks, parking structures
54.17	4000 psi	Sanitary sewer and manhole structures
55.17	3000 psi concrete	Exterior structures, sidewalks, storm drain manholes, Misc exterior
56.17	3000 psi	Exterior concrete – curb & gutter, curb machine (low slump)
57.17	4000 psi	High early release concrete
59.17	N/A	Lean Fill, Section 207

If there should be any questions, please do not hesitate to call.

Sincerely,

LEA ANN MARQUEZ
NEW MEXICO
16029
PROFESSIONAL ENGINEER

Lea Ann Marquez, P.E.

City Of Albuquerque 3000 PSI - Interior

Interior Structure & Slab on Grade, Heated areas, Section 510

Client: Duke City Redimix
Address: 7705 Broadway SE
Albuquerque, NM 87105

Report Date: 12/21/2016

CONCRETE MIX PROPORTIONS

Mix Code: **50.17**

Material Description	Material Source	SSD Batch Weights	Specific Gravity SSD	Absorption	Abs Vol in Ft^3
Cement, type I-II LA>	***Holcim I/II***	425	3.15		2.16
Ash, type F	***SRM 4 Corners Fly Ash***	120	1.95		0.99
	Total Cementitious>	545			
Fine Aggregate/Lb>	***Orona Concrete Sand***	1161	2.564	2.08%	7.26
Coarse Aggregate #1/	***South Valley Pit 7/8"***	1345	2.738	2.20%	7.87
Coarse Aggregate #2/	***South Valley Pit 3/8"***	550	2.768	2.30%	3.19
Coarse Aggregate #3/	***N/A***	0	1	1.00%	
	Total design coarse aggregate at ssd:	1895			
	Total design FA & CA at ssd:	3057		18.30	
Air Content % by volume>	Entrained	5.5			1.49
Water @ SSD aggregates>	Gals/cubic yard:	30.5			4.07
	Lbs per cubic yard:	254			
	Total Weight>	3856		Total Volume>	27.0
Air Entraining Admixture - OZ	***Sika Air***	2.7	oz.	0.50	oz/cwt
MRWR - OZ	***Sika Plastocrete 161***	27.3	oz.	5.0	oz/cwt

Temperature and slump variations may cause adjustments in admixtures dosages.

	Design	Specs	Production
Total Cementitious content in lbs:	545		
Cement content in lbs:	425	> 423	425
Water/cementitious ratio:	0.47	< 0.5	0.47
Water/cement ratio:	0.60		
Ash wt as % of cement wt only:	28.2%		
Ash wt as % of total cementitious:	22.0%	> 20%	22.0%
Orona Concrete Sand	38.0%		
South Valley Pit 7/8"	44.0%		
South Valley Pit 3/8"	18.0%		
N/A	0.0%		

Adjusted Workability Factor	34.1
Coarseness Factor	50.6
Target corrected air content:	4.5-7.5%
Anticipated Air Content:	5.5%
Aggregate Correction Factor:	1.50
Target slump:	< 4"
Anticipated Slump:	4
Anticipated Unit Weight:	142.7
Max Theo. unit weight:	151.0
Calc'd Air:	5.5%

Age in Days	Average compressive strength	Specs
3	2964	
7	3918	
14	4281	f'c = 3000 psi
28	4720	f'cr = 4200 psi

Batch weights and anticipated plastic and hardened properties are based on trial batches Alb. 1, 2, 3, 4 & 5 which were batched 4/1/09. Volumetrics were updated based on December 2017 aggregate testing.

Concrete, Aggregate and Asphalt Testing, LLC
P.O. Box 1228 - 414 Bibb Industrial Drive
Las Vegas, NM 87701
(505)718-3030 phone

City Of Albuquerque 3500 PSI - Exterior

Hydraulic Structures, Storm Drain Structures & Channels, and Water Reservoirs Sectio
510, 512, and 602

CA2 TESTING

Client: Duke City Redimix
Address: 7705 Broadway SE
Albuquerque, NM 87105

Report Date: 12/21/2016

CONCRETE MIX PROPORTIONS

Mix Code: **51.17**

Material Description	Material Source	SSD Batch Weights	Specific Gravity SSD	Absorption	Abs Vol in Ft^3
Cement, type I-II LA>	*Holcim I/II*	519	3.15		2.64
Ash, type F	*SRM 4 Corners Fly Ash*	146	1.95		1.20
	Total Cementitious>	665			
Fine Aggregate/Lb>	*Orona Concrete Sand*	1106	2.564	2.08%	6.91
Coarse Aggregate #1/	*South Valley Pit 7/8"*	1280	2.738	2.20%	7.49
Coarse Aggregate #2/	*South Valley Pit 3/8"*	524	2.768	2.30%	3.03
Coarse Aggregate #3/	*N/A*	0	1	1.00%	
	Total design coarse aggregate at ssd:	1804			
	Total design FA & CA at ssd:	2910		17.42	
Air Content % by volume>	Entrained	5.5			1.49
Water @ SSD aggregates>	Gals/cubic yard:	31.9			4.26
	Lbs per cubic yard:	266			
	Total Weight>	3840		Total Volume>	27.0
Air Entraining Admixture - OZ	*Sika AIr*	3.3	oz.	0.50	oz/cwt
MRWR - OZ	*Sika Plastocrete 161*	33.3	oz.	5.0	oz/cwt

Temperature and slump variations may cause adjustments in admixtures dosages.

	Design	Specs	Production
Total Cementitious content in lbs:	665		
Cement content in lbs:	519	> 517	519
Water/cementitious ratio:	0.40	< 0.4	0.40
Water/cement ratio:	0.51		
Ash wt as % of cement wt only:	28.2%		
Ash wt as % of total cementitious:	22.0%	> 20%	22.0%
Orona Concrete Sand	38.0%		
South Valley Pit 7/8"	44.0%		
South Valley Pit 3/8"	18.0%		
N/A	0.0%		

Adjusted Workability Factor	37.3
Coarseness Factor	50.6
Target corrected air content:	4.5-7.5%
Anticipated Air Content:	5.5%
Aggregate Correction Factor:	1.50
Target slump:	< 4"
Anticipated Slump:	4
Anticipated Unit Weight:	142.1
Max Theo. unit weight:	150.4
Calc'd Air:	5.5%

Age in Days	Average compressive strength	Specs
3	4019	
7	5313	
14	5085	f'c = 3500 psi
28	6400	f'cr = 4700 psi

Batch weights and anticipated plastic and hardened properties are based on trial batches Alb. 1, 2, 3, 4 & 5 which were batched 4/1/09. Volumetrics were updated based on December 2017 aggregate testing.

Concrete, Aggregate and Asphalt Testing, LLC
P.O. Box 1228 - 414 Bibb Industrial Drive
Las Vegas, NM 87701
(505)718-3030 phone

City Of Albuquerque 4000 PSI - Exterior

Structures, Bridges/Bridge decks, and Parking Structures, Section 337 and 510

CA2 TESTING

Client: Duke City Redimix
Address: 7705 Broadway SE
Albuquerque, NM 87105

Report Date: 12/21/2016

CONCRETE MIX PROPORTIONS

Mix Code: **52.17**

Material Description	Material Source	SSD Batch Weights	Specific Gravity SSD	Absorption	Abs Vol in Ft³
Cement, type I-II LA>	*Holcim I/II*	566	3.15		2.88
Ash, type F	*SRM 4 Corners Fly Ash*	160	1.95		1.31
	Total Cementitious>	725			
Fine Aggregate/Lb>	*Orona Concrete Sand*	1079	2.564	2.08%	6.74
Coarse Aggregate #1/	*South Valley Pit 7/8"*	1221	2.738	2.20%	7.14
Coarse Aggregate #2/	*South Valley Pit 3/8"*	539	2.768	2.30%	3.12
Coarse Aggregate #3/	*N/A*	0	1	1.00%	
	Total design coarse aggregate at ssd:	1760			
	Total design FA & CA at ssd:	2839		16.99	
Air Content % by volume>	Entrained	5.5			1.49
Water @ SSD aggregates>	Gals/cubic yard:	32.5			4.34
	Lbs per cubic yard:	271			
	Total Weight>	3834		Total Volume>	27.0
Air Entraining Admixture - OZ	*Sika Air*	3.6	oz.	0.50	oz/cwt
MRWR - OZ	*Sika Plastocrete 161*	36.3	oz.	5.0	oz/cwt

Temperature and slump variations may cause adjustments in admixtures dosages.

	Design	Specs	Production
Total Cementitious content in lbs:	725		
Cement content in lbs:	566	> 564	566
Water/cementitious ratio:	0.37	< 0.4	0.37
Water/cement ratio:	0.48		
Ash wt as % of cement wt only:	28.2%		
Ash wt as % of total cementitious:	22.0%	> 20%	22%
Orona Concrete Sand	38.0%		
South Valley Pit 7/8"	43.0%		
South Valley Pit 3/8"	19.0%		
N/A	0.0%		

Adjusted Workability Factor	39.7
Coarseness Factor	51.3
Target corrected air content:	4.5-7.5%
Anticipated Air Content:	5.5%
Aggregate Correction Factor:	1.50
Target slump:	< 4"
Anticipated Slump:	4
Anticipated Unit Weight:	141.9
Max Theo. unit weight:	150.2
Calc'd Air:	5.5%

Age in Days	Average compressive strength	Specs
3		
7	4119	
14		f'c = 4000 psi
28	5711	f'cr = 5050 psi

Batch weights and anticipated plastic and hardened properties are based on trial batches Alb. 1, 2, 3, 4 & 5 which were batched 4/1/09. Volumetrics were updated based on December 2017 aggregate testing. Compressive strength results from statistical analysis ranging from 1/4/16 thru 6/16/16.
f'cr = 3780 psi
f'cr = 4012 psi

Concrete, Aggregate and Asphalt Testing, LLC
P.O. Box 1228 - 414 Bibb Industrial Drive
Las Vegas, NM 87701
(505)718-3030 phone

City Of Albuquerque 4000 PSI - Exterior

Sanitary Sewer and Manhole Structures Section 900

Client: Duke City Redimix
Address: 7705 Broadway SE
Albuquerque, NM 87105

Report Date: 12/21/2016

CONCRETE MIX PROPORTIONS

Mix Code: **54.17**

Material Description	Material Source	SSD Batch Weights	Specific Gravity SSD	Absorption	Abs Vol in Ft^3
Cement, type I-II LA>	*Holcim I/II*	659	3.15		3.35
Ash, type F	*SRM 4 Corners Fly Ash*	186	1.95		1.53
	Total Cementitious>	845			
Fine Aggregate/Lb>	*Orona Concrete Sand*	985	2.564	2.08%	6.15
Coarse Aggregate #1/	*South Valley Pit 7/8"*	1224	2.738	2.20%	7.17
Coarse Aggregate #2/	*South Valley Pit 3/8"*	452	2.768	2.30%	2.62
Coarse Aggregate #3/	*N/A*	0	1	1.00%	
	Total design coarse aggregate at ssd:	1677			
	Total design FA & CA at ssd:	2661		15.92	
Air Content % by volume>	Entrained	5.5			1.49
Water @ SSD aggregates>	Gals/cubic yard:	35.3			4.71
	Lbs per cubic yard:	294			
	Total Weight>	3800		Total Volume>	27.0
Air Entraining Admixture - OZ	*Sika Air*	4.2	oz.	0.50	oz/cwt
MRWR - OZ	*Sika Plastocrete 161*	42.3	oz.	5.0	oz/cwt

Temperature and slump variations may cause adjustments in admixtures dosages.

	Design	Specs	Production
Total Cementitious content in lbs:	845		
Cement content in lbs:	659	> 658	659
Water/cementitious ratio:	0.35	< 0.4	0.35
Water/cement ratio:	0.45		
Ash wt as % of cement wt only:	28.2%		
Ash wt as % of total cementitious:	22.0%	> 20%	22.0%
Orona Concrete Sand	37.0%		
South Valley Pit 7/8"	46.0%		
South Valley Pit 3/8"	17.0%		
N/A	0.0%		

Adjusted Workability Factor	41.2
Coarseness Factor	52.2
Target corrected air content:	4.5-7.5%
Anticipated Air Content:	5.5%
Aggregate Correction Factor:	1.50
Target slump:	< 4"
Anticipated Slump:	4
Anticipated Unit Weight:	140.7
Max Theo. unit weight:	148.8
Calc'd Air:	5.5%

Age in Days	Average compressive strength	Specs
3		
7	4117	
14		f'c = 4000 psi
28	7560	f'cr = 5200 psi

Batch weights and anticipated plastic and hardened properties are based on trial batches Alb. 1, 2, 3, 4 & 5 which were batched 4/1/09. Volumetrics were updated based on December 2017 aggregate testing. Compressive strenth results shown are based on 2014 statistical data. Not enough data for 2016 to perform an analysis.

Concrete, Aggregate and Asphalt Testing, LLC
P.O. Box 1228 - 414 Bibb Industrial Drive
Las Vegas, NM 87701
(505)718-3030 phone

City Of Albuquerque 3000 PSI - Exterior

Exterior Structures, Sidewalks, Storm Drain Manholes, Misc Concrete
Sections 340, 346, 420, 510, 511, 701 and 1500

Client: Duke City Redimix
Address: 7705 Broadway SE
Albuquerque, NM 87105

Report Date: 12/21/2016

CONCRETE MIX PROPORTIONS

Mix Code: **55.17**

Material Description	Material Source	SSD Batch Weights	Specific Gravity SSD	Absorption	Abs Vol in Ft^3
Cement, type I-II LA>	*Holcim I/II*	471	3.15		2.40
Ash, type F	*SRM 4 Corners Fly Ash*	133	1.95		1.09
	Total Cementitious>	604			
Fine Aggregate/Lb>	*Orona Concrete Sand*	1131	2.564	2.08%	7.07
Coarse Aggregate #1/	*South Valley Pit 7/8"*	1310	2.738	2.20%	7.67
Coarse Aggregate #2/	*South Valley Pit 3/8"*	536	2.768	2.30%	3.10
Coarse Aggregate #3/	*N/A*	0	1	1.00%	
	Total design coarse aggregate at ssd:	1846			
	Total design FA & CA at ssd:	2977		17.82	
Air Content % by volume>	Entrained	5.5			1.49
Water @ SSD aggregates>	Gals/cubic yard:	31.5			4.20
	Lbs per cubic yard:	262			
	Total Weight>	3844	Total Volume>		27.0
Air Entraining Admixture - OZ	*Sika Air*	3.0	oz.	0.50	oz/cwt
MRWR - OZ	*Sika Plastocrete 161*	30.2	oz.	5.0	oz/cwt

Temperature and slump variations may cause adjustments in admixtures dosages.

	Design	Specs	Production
Total Cementitious content in lbs:	604		
Cement content in lbs:	471	> 470	471
Water/cementitious ratio:	0.43	< 0.45	0.43
Water/cement ratio:	0.56		
Ash wt as % of cement wt only:	28.2%		
Ash wt as % of total cementitious:	22.0%	> 20%	22%
Orona Concrete Sand	38.0%		
South Valley Pit 7/8"	44.0%		
South Valley Pit 3/8"	18.0%		
N/A	0.0%		

Adjusted Workability Factor	35.7
Coarseness Factor	50.6
Target corrected air content:	4.5-7.5%
Anticipated Air Content:	5.5%
Aggregate Correction Factor:	1.50
Target slump:	< 4"
Anticipated Slump:	4
Anticipated Unit Weight:	142.2
Max Theo. unit weight:	150.5
Calc'd Air:	5.5%

Age in Days	Average compressive strength	Specs
3		
7	3569	
14		f'c = 3000 psi
28	4914	f'cr = 3540 psi

Batch weights and anticipated plastic and hardened properties are based on trial batches Alb. 1, 2, 3, 4 & 5 which were batched 4/1/09. Volumetrics were updated based on December 2017 aggregate testing. Compressive strength results from statistical analysis ranging from 1/11/16 thru 5/3/16.
f'cr = 3540 psi
f'cr = 3439 psi

Concrete, Aggregate and Asphalt Testing, LLC
P.O. Box 1228 - 414 Bibb Industrial Drive
Las Vegas, NM 87701
(505)718-3030 phone

City Of Albuquerque 3000 PSI - Exterior

Exterior Structures, Curb & Gutter, Curb Machine (Low Slump), Section 340

Client: Duke City Redimix
Address: 7705 Broadway SE
Albuquerque, NM 87105

Report Date: 12/21/2016

CONCRETE MIX PROPORTIONS

Mix Code: **56.17**

Material Description	Material Source	SSD Batch Weights	Specific Gravity SSD	Absorption	Abs Vol in Ft^3
Cement, type I-II LA>	*Holcim I/II*	471	3.15		2.40
Ash, type F	*SRM 4 Corners Fly Ash*	133	1.95		1.09
	Total Cementitious>	604			
Fine Aggregate/Lb>	*Orona Concrete Sand*	1148	2.564	2.08%	7.18
Coarse Aggregate #1/	*South Valley Pit 7/8"*	1330	2.738	2.20%	7.78
Coarse Aggregate #2/	*South Valley Pit 3/8"*	544	2.768	2.30%	3.15
Coarse Aggregate #3/	*N/A*	0	1	1.00%	
	Total design coarse aggregate at ssd:	1874			
	Total design FA & CA at ssd:	3022		18.09	
Air Content % by volume>	Entrained	5.5			1.49
Water @ SSD aggregates>	Gals/cubic yard:	29.5			3.94
	Lbs per cubic yard:	246			
	Total Weight>	3872		Total Volume>	27.0
Air Entraining Admixture - OZ	*Sika Air*	3.0	oz.	0.50	oz/cwt
MRWR - OZ	*Sika Plastocrete 161*	30.2	oz.	5.0	oz/cwt

Temperature and slump variations may cause adjustments in admixtures dosages.

	Design	Specs	Production
Total Cementitious content in lbs:	604		
Cement content in lbs:	471	> 470	471
Water/cementitious ratio:	0.41	< 0.45	0.41
Water/cement ratio:	0.52		
Ash wt as % of cement wt only:	28.2%		
Ash wt as % of total cementitious:	22.0%	> 20%	22%
Orona Concrete Sand	38.0%		
South Valley Pit 7/8"	44.0%		
South Valley Pit 3/8"	18.0%		
N/A	0.0%		

Adjusted Workability Factor	35.7
Coarseness Factor	50.6
Target corrected air content:	4.5-7.5%
Anticipated Air Content:	5.5%
Aggregate Correction Factor:	1.50
Target slump:	< 2.5"
Anticipated Slump:	2 1/2
Anticipated Unit Weight:	143.3
Max Theo. unit weight:	151.6
Calc'd Air:	5.5%

Age in Days	Average compressive strength	Specs
3		
7	4431	
14		f'c = 3000 psi
28	5924	f'cr = 4200 psi

Batch weights and anticipated plastic and hardened properties are based on trial batches Alb. 1, 2, 3, 4 & 5 which were batched 4/1/09. Volumetrics were updated based on December 2017 aggregate testing. Compressive strenth results shown are based on 2014 statistical data. Not enough data for 2016 to perform an analysis.

Concrete, Aggregate and Asphalt Testing, LLC
P.O. Box 1228 - 414 Bibb Industrial Drive
Las Vegas, NM 87701
(505)718-3030 phone

City Of Albuquerque - High Early Release Concrete

Client: Duke City Redimix
Address: 7705 Broadway SE
Albuquerque, NM 87105

Report Date: 12/21/2016

CONCRETE MIX PROPORTIONS

Mix Code: **57.17**

Material Description	Material Source	SSD Batch Weights	Specific Gravity SSD	Absorption	Abs Vol in Ft^3
Cement, type I-II LA>	*Holcim I/II*	542	3.15		2.76
Ash, type F	*SRM 4 Corners Fly Ash*	153	1.95		1.26
	Total Cementitious>	695			
Fine Aggregate/Lb>	*Orona Concrete Sand*	1090	2.564	2.08%	6.81
Coarse Aggregate #1/	*South Valley Pit 7/8"*	1262	2.738	2.20%	7.38
Coarse Aggregate #2/	*South Valley Pit 3/8"*	516	2.768	2.30%	2.99
Coarse Aggregate #3/	*N/A*	0	1	1.00%	
	Total design coarse aggregate at ssd:	1778			
	Total design FA & CA at ssd:	2867		17.16	
Air Content % by volume>	Entrained	5.5			1.49
Water @ SSD aggregates>	Gals/cubic yard:	32.5			4.34
	Lbs per cubic yard:	271			
	Total Weight>	3833	Total Volume>		27.0
Air Entraining Admixture - OZ	*Sika Air*	3.5	oz.	0.50	oz/cwt
MRWR - OZ	*Sika Plastocrete 161*	34.8	oz.	5.0	oz/cwt

Temperature and slump variations may cause adjustments in admixtures dosages.

	Design	Specs	Production
Total Cementitious content in lbs:	695		
Cement content in lbs:	542	N/A	542
Water/cementitious ratio:	0.39	N/A	0.39
Water/cement ratio:	0.50		
Ash wt as % of cement wt only:	28.2%		
Ash wt as % of total cementitious:	22.0%	> 20%	22.0%
Orona Concrete Sand	38.0%		
South Valley Pit 7/8"	44.0%		
South Valley Pit 3/8"	18.0%		
N/A	0.0%		

Adjusted Workability Factor	38.1
Coarseness Factor	50.6
Target corrected air content:	4.5-7.5%
Anticipated Air Content:	5.5%
Aggregate Correction Factor:	1.50
Target slump:	< 4"
Anticipated Slump:	4
Anticipated Unit Weight:	141.9
Max Theo. unit weight:	150.1
Calc'd Air:	5.5%

Age in Days	Average compressive strength	Specs
3	3915	f'c = 4000 psi
7	5325	f'cr = 5200 psi
14	5908	
28	6478	

Batch weights and anticipated plastic and hardened properties are based on trial batches Alb. 1, 2, 3, 4 & 5 which were batched 4/1/09. Volumetrics were updated based on December 2017 aggregate testing.

Concrete, Aggregate and Asphalt Testing, LLC
P.O. Box 1228 - 414 Bibb Industrial Drive
Las Vegas, NM 87701
(505)718-3030 phone

City Of Albuquerque - Lean Fill

Client: Duke City Redimix
Address: 7705 Broadway SE
Albuquerque, NM 87105

Report Date: 12/29/2016

MIX PROPORTIONS

10/29/2013 batch date — Mix Code: **59.17**

Material Description	Material Source	SSD Batch Weights	Specific Gravity SSD	Absorption	Abs Vol in Ft^3
Cement, type I-II LA>	*Holcim I/II*	47	3.15		0.24
Ash, type F	*SRM 4 Corners Fly Ash*	0	1.95		0.00
	Total Cementitious>	47			
Fine Aggregate/Lb>	*Orona Concrete Sand*	2004	2.564	2.08%	12.53
Coarse Aggregate #1/L	*South Valley Pit 7/8"*	0	2.738	2.20%	0.00
Coarse Aggregate #2/L	*South Valley Pit 3/8"*	987	2.768	2.30%	5.71
Coarse Aggregate #3/L	*N/A*	0	1	1.00%	
	Total design coarse aggregate at ssd:	987			
	Total design FA & CA at ssd:	2991		18.22	
Air Content % by volume>	Entrained	5.0			1.35
Water @ SSD aggregates>	Gals/cubic yard:	53.9			7.19
	Lbs per cubic yard:	449			
	Total Weight>	3487		Total Volume>	27.0
Air Entraining Admixture - OZ	*Sika AIr*	0.3	oz.	0.60	oz/cwt
MRWR - OZ	*Sika Plastocrete 161*	0.0	oz.	0.0	oz/cwt

Temperature and slump variations may cause adjustments in admixtures dosages.

	Design	Specs	Production
Total Cementitious content in lbs:	47		
Cement content in lbs:	47	> 47	47
Water/cementitious ratio:	9.55	N/A	9.55
Water/cement ratio:	9.55		
Ash wt as % of cement wt only:	0.0%		
Ash wt as % of total cementitious:	0.0%	N/A	0.0%
Orona Concrete Sand	67.0%		
South Valley Pit 7/8"	0.0%		
South Valley Pit 3/8"	33.0%		
N/A	0.0%		

Adjusted Workability Factor	45.9
Coarseness Factor	2.5
Target corrected air content:	> 2%
Anticipated Air Content:	3.5%
Aggregate Correction Factor:	0.80
Target slump:	5 - 8"
Anticipated Slump:	5 1/2
Anticipated Unit Weight:	131.8
Max Theo. unit weight:	135.8
Calc'd Air:	3.0%

Concrete, Aggregate and Asphalt Testing, LLC
P.O. Box 1228 - 414 Bibb Industrial Drive
Las Vegas, NM 87701
(505)718-3030 phone

City Of Albuquerque - Lean Fill

Client: Duke City Redimix
Address: 7705 Broadway SE
Albuquerque, NM 87105

Report Date: 12/29/2016

	Age in Days	compressive strength (psi)	avg	specs	Moisture Content	Dry Density	% Compaction	specs
10/30/13	1	7						
10/30/13	1	9						
10/30/13	1	6	7		9.3	124	99.7%	> 95%
11/05/13	7	14						
11/05/13	7	12						
11/05/13	7	16	14		9.1	123.5	99.3%	
11/12/13	14	23						
11/12/13	14	25	24		8.8	123.8	99.5%	
11/26/13	28	43						
11/26/13	28	41			9.2	124.1	99.7%	
11/26/13	28	40	41	< 60 psi	9.3	123.8	99.5%	

	Combined grading	SPEC	Individual Sieve retained
1"	100	100	
3/4"	100	95-100	0
1/2"	100		0
3/8"	98	82-100	2
#4	73	70-100	24
#8	61	55-85	12
#16	56	38-60	5
#30	45		11
#50	18	6-30	27
#100	2	2-10	15
#200	1.4		1

Workability Factor: 60.9
Adjusted Workability Factor 47.2
Coarseness Factor: 5.9

Maximum Density 124.4
Optimum Moisture 7.8

Note: Proctor tested Fall 2013

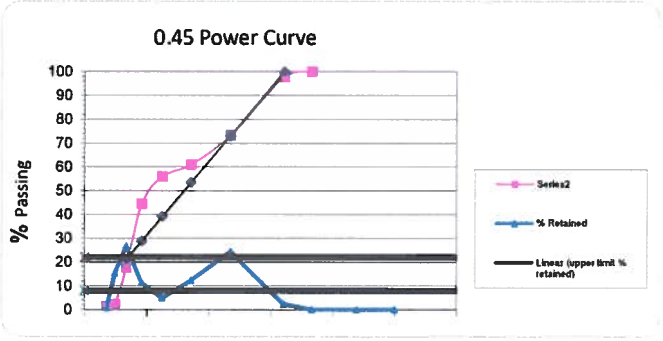

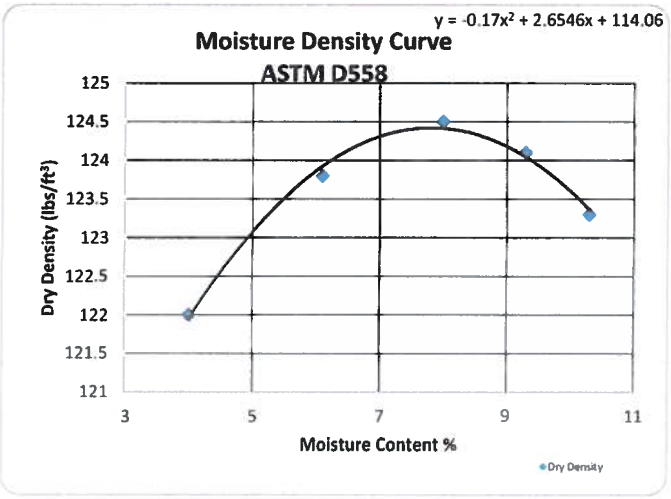

Concrete, Aggregate and Asphalt Testing, LLC
P.O. Box 1228 - 414 Bibb Industrial Drive
Las Vegas, NM 87701
(505)718-3030 phone

FOC0SBMRVWWKSHT3X3.xls

PORTLAND CEMENT CONCRETE SUBMITTAL ANALYSIS

REPORT DATE: 13-Jan-17
SUPPLIER: Duke City Redi Mix

ENGLISH BATCH WEIGHTS		CODE	50.17		51.17		52.17		54.17		55.17		56.17		57.17	
DESCRIPTION		APPLICATION	Interior		Hydraulic Structures		Structures		Sanitary		Exterior		Exterior Low Slump		HER	
BATCH WEIGHTS		UNITS		ft^3		ft^3		ft^3		ft^3		ft^3		ft^3		ft^3
c_d= DESIGN CEMENT	Holcim Type-II LA	pcy	425	2.16	519	2.64	566	2.88	659	3.35	471	2.40	471	2.40	542	2.76
fa_d= DESIGN FLY ASH	SRM- 4 Corners	pcy	120	0.97	146	1.18	160	1.30	186	1.51	133	1.08	133	1.08	153	1.24
fa_d : (c_d+fa_d) ratio	20.0 % minimum		22.00	22.00	22.00	22.00	22.00	22.00	22.00	22.00	22.00	22.00	22.00	22.00	22.00	22.00
W_d = DESIGN WATER		pcy	254.00	4.07	266.00	4.26	271.00	4.34	294.00	4.71	262.00	4.20	246.00	3.94	271.00	4.34
			30.50	30.49	31.90	31.93	32.50	32.53	35.30	35.29	31.50	31.45	29.50	29.53	32.50	32.53
AGG1, FA	Orona	pcy	1,161	7.26	1,106	6.91	1,079	6.74	985	6.16	1,131	7.07	1,148	7.18	1,090	6.81
AGG2, CA1	South Valley Pit	pcy	1,345	7.87	1,280	7.49	1,221	7.15	1,224	7.16	1,310	7.67	1,330	7.78	1,262	7.39
AGG3, CA2	South Valley Pit	pcy	550	3.18	524	3.03	539	3.12	452	2.62	536	3.10	544	3.15	516	2.99
ADMX1, AEA	Sika Air	oz/cy	2.7		3.3		3.6		4.2		3.0		3.0		3.5	
	TARGET Entr Air	%	5.5	1.49	5.5	1.49	5.5	1.49	5.5	1.49	5.5	1.49	5.5	1.49	5.5	1.49
ADMX2, NWRDA	Sika Plastocrete 161	oz/cy	27.3		33.3		36.3		42.3		30.2		30.2		34.8	
ADMX3, MRWRA	0	oz/cy														
ADMX4, HRWRA	0	oz/cy														
ADMX5, ACCEL	0	oz/cy														
ADMX6, RETARDER	0	oz/cy														
ENGLISH ANALYSIS																
TOTAL		pcy	3,856.0	3,855	3,840.0	3,841	3,834.0	3,836	3,800.0	3,800	3,844.0	3,843	3,872.0	3,872	3,860.0	3,834
UNIT WEIGHT		pcf	142.7	142.78	142.1	142.26	141.9	141.97	140.7	140.74	142.2	142.28	143.3	143.30	142.9	141.89
YIELD		ft3	27.00	27.000	27.00	27.000	27.00	27.020	27.00	27.000	27.00	27.010	27.00	27.020	27.00	27.020
WATER TO CEMENTITIOUS RATIO: $[w:(c+fa)]_d$			0.47	0.466	0.40	0.400	0.37	0.373	0.35	0.348	0.43	0.434	0.41	0.407	0.39	0.390
Trial Mix/Specification: $[w:(c+fa)]_{max}$																
COMPLIANCE: $[w:(c+fa)]_d \leq [w:(c+fa)]_{max}$			0.000		0.000		0.000		0.000		0.000		0.000		0.000	
Design Water: w_d		pcy	254	254	266	266	271	271	294	294	262	262	246	246	271	271
Req'd Cementitious: $(c_d'+fa_d')= [w:(c+fa)]_d$ x Wbw_d		pcy	540	545	665	665	732	726	840	845	609	604	600	604	695	695
Req'd Fly Ash: $fa_d'= (c_d' + fa_d') \times fa_d/(c_d+fa_d)$		pcy	119	120	146	146	161	160	185	186	134	133	132	133	153	153
Delta $(fa)_{del}$= fad-fad'		pcy	1		0		-1		1		-1		1		0	
Req'd: $c_d'= (c_d'+fa_d') - fa_d'$		pcy	421	425	519	519	571	566	655	659	475	471	468	471	542	542
Minimum Cement Content Specified, lbs/yd^3		pcy	423		517		564		658		470		470		542	
Delta $(c)_{del}$= cd-cd' If negative, adjust water		pcy	4		0		-5		4		-4		3		0	
FA:(FA+CA1+CA2)		%	18	17	18	17	19	18	17	16	18	17	18	17	18	17
DESIGN STRENGTH, f_d @ 28 DAYS		psi	4,720		6,400		5,711		7,560		4,914		5,924		5,325	@7 dys
REQUIRED, f_{cr} @ 28 DAYS		psi	4,200		4,700		5,050		5,200		3,540		4,200		5,200	@7 dys
SLUMP	NORMAL	in.	4		4		4		4		4		2.5		4	
	W/HRWRDA	in.														
ENTRAINED AIR		%	5.5		5.5		5.5		5.5		5.5		5.5		5.5	

DEPARTMENT OF THE ARMY
ALBUQUERQUE DISTRICT, CORPS OF ENGINEERS
ALBUQERQUE DISTRICT OFFICE
4101 JEFFERSON PLAZA NE
ALBUQUERQUE, NM 87109

SUBMITTAL REVIEW VERIFICATION SHEET

PROJECT TITLE: Kirtland BFF Mid-Plume Pump and Treat System Expansion
CONTRACT NUMBER: W912DR-12-D-0006 DM01
DATE RECEIVED: 8-02-2017
DATE REVIEWED: 8-02-2017

DESCRIPTION OF ITEMS REVIEWED:

1. Detectable Warning Tape

NO EXCEPTIONS TAKEN.	**X**
EXCEPTIONS AS NOTED ON DRAWINGS AND/OR ATTACHED SHEETS(S). RESUBMISSION NOT REQUIRED.	
EXCEPTIONS AS NOTED ON DRAWINGS AND/OR ATTACHED SHEETS(S). RESUBMISSION REQUIRED.	
RECEIPT ACKKNOWLEDGED.	

Notes:

NOTE: ITEMS REVIEWED AS TO GENERAL LAYOUT ONLY. DIMENSIONS AND QUANTITIES NOT CHECKED. REVIEW DOES NOT RELIEVE CONTRACTOR OF RESPONSIBILITIES FOR ANY ERRORS WHICH MAY EXIST AS CONTRACTOR SHALL BE RESPONSIBLE FOR DIMENSIONS AND DESIGN OF ADEQUATE CORRECTIONS, DETAILS AND SATISFACTORY CONSTRUCTION OF WORK.

SIGNATURE _____ **DATE** 8/2/2017

EA Engineering, Science, and Technology, Inc., PBC

Submittal Review Sheet 1

Project Name: **Kirtland BFF Mid-Plume Pump and Treat System Expansion**				Date Received: **8/1/17**		
Project Owner: **Kirtland Air Force Base**				Checked By: **Tyler Curley**		
Contractor: **RMCI, Inc.**	Engineer: **EA Engineering, Science and Technology, Inc., PBC.**			Log Page: **NA**		
Address: **6211 Chappell Rd NE, Albuquerque, NM 87113**	Address: **320 Gold Ave. SW, Suite 1300 Albuquerque, NM 87102**			EA No.: **62599DM01**		
				Spec. Section: **31 00 00 2.2.2**		
				Drawing/Detail No.: **C-301/E-501**		
ATTN: **Phillip Johnson**	ATTN: **Devon Jercinovic**			1st Sub		Re-Sub
Date Transmitted: **08/01/2017**	Prev. Transmittal Date:					

Item No.	No. Copies	Description	Manufacturer	Mfg/Vendor Dwg or Detail	Action Taken*
1	1	Detectable Warning Tape	Pro-Line Safety Products		C-9

The Action Designated Above is in Accordance with the Following Legend:

A – Furnish as Submitted
B – Furnish as Noted
C – Revise and Re-submit
1. Not enough information for review.
2. No reproducible submitted.
3. Copies illegible.
4. Not enough copies submitted.
5. Wrong sequence number.
6. Wrong resubmittal number.
7. Wrong Spec. Section.
8. Wrong form used.
9. See Comments.

D – Rejected
E – Engineer's Review not Required
1. Submittal not required.
2. Supplemental Information. Submittal retained for Information purposes only.
3. Information reviewed and approved on prior submittal.
4. See Comments.

Review is for general compliance with Contract Documents. No responsibility is assumed for correctness of dimensions or detail. Contractor is required to specify deviations from contract requirements. Lack of exceptions noted by Engineer does not waive Contractor's obligation to comply with Drawings and Specifications.

Comments:
Items reviewed and confirmed to meet requirements
Issues in Bold

Detectable warning (3" green striped) is suitable for the GWTS influent line.

By: _____ Date: 8/1/17

Distribution: [1] Contractor [1] Engineer [1] Owner

DETECTABLE TAPE (5.0 MIL)

Solid Aluminum Foil Core • Virgin Clear Polypropylene Film Laminated Top Structure
Virgin Clear Polyethylene Film Laminated Base Structure • Reverse Printed Polypropylene Structure
Acid, Alkali, Chemical, and Oil Resistant • Direct Burial Rated • Made in the USA

Applications and Information

- **Pro-Line's Detectable Marking Tape** is used for detecting, locating, identifying, and protecting buried utility lines for gas, water, sewer, telecommunication, and electrical markets. The width of tape used, is determined by the size of, and depth at which the underground utility line is buried. The depth at which detectable tape is buried, is determined by the width of the tape used.
- **DETECT:** Aluminum core is detected through means of inductive locating.
- **LOCATE:** Line is located and marked after inductive locating is performed.
- **IDENTIFY:** Utility type is identified by both the APWA color-code and utility legend printed on the marking tape.
- **PROTECT:** Detectable tape works 24 hours a day and year round, even if tape is not inductively located during excavation, the tape provides a "stop-sign" effect that is highly visible.

Standards and References

Pro-Line's Detectable Marking Tape meets or exceeds all applicable ASTM specifications.

- ASTM D2103-08: Standard Specification for Polyethylene Films and Sheeting.
- ASTM D882-09: Standard Test Method for Tensile Properties and Elongation of Thin Plastic Sheeting.
- ASTM D2578-08: Standard Test Method for Wetting Tension of Polyethylene and Polypropylene Films.
- ASTM D792-08: Standard Test Methods for Density of Plastics by Displacement.
- ASTM D671-93: Standard Test Method for Flexural Fatigue of Plastics.

Construction

Pro-Line's Detectable Marking Tape consists of a minimum 5.0 mil overall thickness. Construction is 0.8 mil clear virgin polypropylene film, reverse printed and laminated to a 0.35 solid aluminum foil core and then laminated to a 3.75 mil clear virgin polyethylene film. Tape is printed with our APWA Color-Coded, patented "Diagonally Striped" design with big, bold, black lettering to identify a specific buried utility line.

Specifications

DETECTABLE UNDERGROUND MARKING TAPE
Underground marking tape shall be a (2", 3", 4", 6", or 12" width), detectable marking tape, with a minimum 5.0 mil overall thickness. Tape shall be manufactured using a 0.8 mil clear virgin polypropylene film, reverse printed and laminated to a **0.35 mil solid aluminum foil core**, and then laminated to a 3.75 mil clear virgin polyethylene film. Tape shall be printed using a diagonally striped design for maximum visibility, and meet the APWA Color-Code standard for identification of buried utilities. Detectable marking tape shall be **Pro-Line Safety Products** or approved equal and made in the USA.

DETECTABLE TAPE (5.0 MIL)

TABLE 1: DETECTABLE TAPE CONSTRUCTION (Polypropylene, Aluminum Foil, and Polyethylene)

PROPERTY	2" WIDTH	3" WIDTH	4" WIDTH	6" WIDTH	12" WIDTH
Nominal Overall Thickness	5.0 mil	5.0 mil	5.0 mil	5.0 mil	5.0 mil
Aluminum Foil Core Thickness	0.35 mil	0.35 mil	0.35 mil	0.35 mil	0.35 mil
Polyethylene Film Thickness	3.75 mil	3.75 mil	3.75 mil	3.75 mil	3.75 mil
Polypropylene Film Thickness	0.80 mil	0.80 mil	0.80 mil	0.80 mil	0.80 mil
Polypropylene Print Method	Reverse Printed	Reverse Printed	Reverse Printed	Reverse Printed	Reverse Printed
Print Design #1 (Patented)	**Diagional Striped**	**Diagional Striped**	**Diagional Striped**	**Diagional Striped**	**Diagional Striped**
Print Design #2 (Custom)	Solid Block	Solid Block	Solid Block	Solid Block	Solid Block
Print Design #3 (Custom)	Solid Flood	Solid Flood	Solid Flood	Solid Flood	Solid Flood
Print Design Color-Code	APWA Color-Code	APWA Color-Code	APWA Color-Code	APWA Color-Code	APWA Color-Code

Diagional striped design is a PATENTED design of Pro-Line Safety Products that enhances tape visibility for superior protection.

Please note that there may be a nominal + or - 10% difference throughout the overall thickness.

TABLE 2: TESTING SPECIFICATIONS (Physical and Mechanical Properties)

TEST DESCRIPTION	STANDARD	2" WIDTH	3" WIDTH	4" WIDTH	6" WIDTH	12" WIDTH
Aluminum Foil Core	MFG. SPECS	Virgin Grade	Virgin Grade	Virgin Grade	Virgin Grade	Virgin Grade
Polyethylene Film	MFG. SPECS	Virgin Grade	Virgin Grade	Virgin Grade	Virgin Grade	Virgin Grade
Polypropylene Film	MFG. SPECS	Virgin Grade	Virgin Grade	Virgin Grade	Virgin Grade	Virgin Grade
Adhesive Type	MFG. SPECS	AV1257/CA100	AV1257/CA100	AV1257/CA100	AV1257/CA100	AV1257/CA100
Adhesive Bond Strength	BOILING WATER	5 hrs W/O Peel	5 hrs W/O Peel	5 hrs W/O Peel	5 hrs W/O Peel	5 hrs W/O Peel
Printed Inks	MFG. SPECS	Chromabond	Chromabond	Chromabond	Chromabond	Chromabond
Print Repeat	MFG. SPECS	Varies by Legend	Varies by Legend	Varies by Legend	Varies by Legend	Varies by Legend
Coefficient Friction	ASTM D4521-96	0.247 Static	0.247 Static	0.247 Static	0.247 Static	0.247 Static
Density	ASTM D792-66	1.09 g/cm³	1.09 g/cm³	1.09 g/cm³	1.09 g/cm³	1.09 g/cm³
Elongation (MD)	ASTM D882-80A	139%	139%	139%	139%	139%
Elongation (TD)	ASTM D882-80A	80%	80%	80%	80%	80%
Flexural Fatigue	ASTM D671-93	Pliable Hand	Pliable Hand	Pliable Hand	Pliable Hand	Pliable Hand
Printability	ASTM D2578-08	45 Dynes	45 Dynes	45 Dynes	45 Dynes	45 Dynes
Tensile Strength	ASTM D882-09	15,000 psi	15,000 psi	15,000 psi	15,000 psi	15,000 psi

WEIGHTS, MEASUREMENTS AND PACKAGING

PRODUCT PART NO.	SIZE (WIDTH)	NOMINAL OVERALL THICKNESS	NOMINAL THICKNESS OF STRUCTURAL MATERIALS			RECOMMENDED BURIAL DEPTHS FOR DETECTION	PRODUCT WEIGHT PER ROLL	STANDARD PACKAGING
			ALUMINUM FOIL THICKNESS	POLYETHYLENE THICKNESS	POLYPROPYLENE THCINKESS			
10311**XXX**3	2" x 1000'	5.0 MIL	0.35 MIL	3.75 MIL	0.80 MIL	6-9 inches	4.75 lbs	9 / CARTON
10312**XXX**3	3" x 1000'	5.0 MIL	0.35 MIL	3.75 MIL	0.80 MIL	9-12 inches	7.13 lbs	6 / CARTON
10313**XXX**3	4" x 1000'	5.0 MIL	0.35 MIL	3.75 MIL	0.80 MIL	12-15 inches	9.50 lbs	4 / CARTON
10314**XXX**3	6" x 1000'	5.0 MIL	0.35 MIL	3.75 MIL	0.80 MIL	15-18 inches	14.25 lbs	3 / CARTON
10316**XXX**3	12" x 1000'	5.0 MIL	0.35 MIL	3.75 MIL	0.80 MIL	18-24 inches	28.50 lbs	1 / CARTON

****FOR CUSTOM LEGENDS OR SIZES CALL 800.554.3424****

PRINT LEGEND	PART #
CAUTION BURIED CHILLED WATER LINE BELOW	103
CAUTION BURIED GEOTHERMAL LINE BELOW	128
CAUTION BURIED POTABLE WATER LINE BELOW	115
CAUTION BURIED WAT	
CAUTION BURIED FOR	
CAUTION BURIED FOR	
CAUTION BURIED SAN	
CAUTION BUIRED SEWER LINE BELOW	319
CAUTION BURIED STORM DRAIN LINE BELOW	321
CAUTION BURIED STORM SEWER LINE BELOW	322

PRINT LEGEND	PART #
CAUTION BURIED CATV LINE BELOW	402
CAUTION BURIED COMMUNICATION LINE BELOW	404
CAUTION BURIED FIBER OPTIC CABLE BELOW	406
BELOW	423
TER LINE	512
R LINE BELOW	517
OW	605
CAUTION BURIED HIGH VOLTAGE LINE BELOW	610
CAUTION BURIED GAS LINE BELOW	809
CAUTION BURIED PIPELINE BELOW	814

SPECIAL ORDER TAPE-
3x1000' DETECT GREEN STRIPE TAPE MARKED:
"GWTS INFLUENT PIPELINE BELOW"

DETECTABLE TAPE (5.0 MIL)

PRO-LINE SAFETY PRODUCTS
A DIVISION OF PRO-PAK IND. INC.

PRO-LINE SAFETY PRODUCTS COMPANY
1099 ATLANTIC DRIVE, UNIT 1 • WEST CHICAGO, IL 60185
TOLL FREE: 800.554.3424

MADE IN THE U.S.A. WITH PRIDE

DEPARTMENT OF THE ARMY
ALBUQUERQUE DISTRICT, CORPS OF ENGINEERS
ALBUQERQUE DISTRICT OFFICE
4101 JEFFERSON PLAZA NE
ALBUQUERQUE, NM 87109

SUBMITTAL REVIEW VERIFICATION SHEET

PROJECT TITLE: Kirtland BFF Mid-Plume Pump and Treat System Expansion
CONTRACT NUMBER: W912DR-12-D-0006 DM01
DATE RECEIVED: 9-01-2017
DATE REVIEWED: 9-06-2017

DESCRIPTION OF ITEMS REVIEWED:

1. Nuts, Bolts and Gasket Kits

NO EXCEPTIONS TAKEN.	**X**
EXCEPTIONS AS NOTED ON DRAWINGS AND/OR ATTACHED SHEETS(S). RESUBMISSION NOT REQUIRED.	
EXCEPTIONS AS NOTED ON DRAWINGS AND/OR ATTACHED SHEETS(S). RESUBMISSION REQUIRED.	
RECEIPT ACKKNOWLEDGED.	

Notes:

NOTE: ITEMS REVIEWED AS TO GENERAL LAYOUT ONLY. DIMENSIONS AND QUANTITIES NOT CHECKED. REVIEW DOES NOT RELIEVE CONTRACTOR OF RESPONSIBILITIES FOR ANY ERRORS WHICH MAY EXIST AS CONTRACTOR SHALL BE RESPONSIBLE FOR DIMENSIONS AND DESIGN OF ADEQUATE CORRECTIONS, DETAILS AND SATISFACTORY CONSTRUCTION OF WORK.

SIGNATURE SANCHEZ.AMY.ELIZABETH.1454434338 Digitally signed by SANCHEZ.AMY.ELIZABETH.1454434338 DN: c=US, o=U.S. Government, ou=DoD, ou=PKI, ou=USA, cn=SANCHEZ.AMY.ELIZABETH.1454434338 Date: 2017.09.06 10:08:15 -06'00' **DATE** 9/6/2017

EA Engineering, Science, and Technology, Inc., PBC

Submittal Review Sheet 1

Project Name: **Kirtland BFF Mid-Plume Pump and Treat System Expansion**			Date Received: **8/31/17**
Project Owner: **Kirtland Air Force Base**			Checked By: **Tyler Curley**
Contractor: **RMCI, Inc.**	Engineer: **EA Engineering, Science and Technology, Inc., PBC.**		Log Page: **NA**
Address: **6211 Chappell Rd NE, Albuquerque, NM 87113**	Address: **320 Gold Ave. SW, Suite 1300 Albuquerque, NM 87102**		EA No.: **62599DM01**
			Spec. Section: **40 05 13 2.4.3.1**
			Drawing/Detail No.: **C-301**
ATTN: **Philip Johnson**	ATTN: **Devon Jercinovic**	1st Sub	Re-Sub
Date Transmitted: **09/01/2017**	Prev. Transmittal Date: **08/28/2017**		

Item No.	No. Copies	Description	Manufacturer	Mfg/Vendor Dwg or Detail	Action Taken*
1	1	Nuts, bolts, gasket kits	M&M Bolt and Screw		A

The Action Designated Above is in Accordance with the Following Legend:

A – Furnish as Submitted
B – Furnish as Noted
C – Revise and Re-submit
1. Not enough information for review.
2. No reproducible submitted.
3. Copies illegible.
4. Not enough copies submitted.
5. Wrong sequence number.
6. Wrong resubmittal number.
7. Wrong Spec. Section.
8. Wrong form used.
9. See Comments.

D – Rejected
E – Engineer's Review not Required
1. Submittal not required.
2. Supplemental Information. Submittal retained for Information purposes only.
3. Information reviewed and approved on prior submittal.
4. See Comments.

Review is for general compliance with Contract Documents. No responsibility is assumed for correctness of dimensions or detail. Contractor is required to specify deviations from contract requirements. Lack of exceptions noted by Engineer does not waive Contractor's obligation to comply with Drawings and Specifications.

Comments:
Items reviewed and confirmed to meet requirements
(Reviewed Material in Parentheses)
Issues in Bold

Nuts and bolts meet ASTM A193.
Gasket material meets specifications. Supplier will cut to be in accordance with ASME B16.21

By: _____ Date: 09/01/17

Distribution: [1] Contractor [1] Engineer [1] Owner

M & M Bolt & Screw, Inc

110 SENTRY DRIVE
MANSFIELD, TEXAS 76063-3608

Phone (817) 453-0001 TOLL FREE (888) 676-2658
FAX (817) 453-0038

August 25, 2017 Job Name: KAFB Conveyance Line

HD Supply Waterworks
6135 Second Street NW
Albuquerque, NM 87107

To Whom It May Concern:

This letter is to certify that all materials provided exceed or conform to all ASTM, AWWA, ASME, SAE, ANSI and/or API specifications.

BOLT	SPECIFICATION
Bolts	
Heavy Hex Bolts 304 SS "USA"	ASTM A193 GR. B-8
(Bolts Dimensional)	ASME B18.2.1
Nuts	
Heavy Hex Nuts 304 SS "USA"	ASTM A193 GR. 8
(Nuts Dimensional)	ASME B18.2.2

Respectfully,
Scotty Murphy

SUBMITTAL INFORMATION

"BOLTS, NUTS AND FLAT WASHERS"
"ABSTRACT OF ASTM A193/ASTM A194"
"GRADE B8" T-304

GRADE: UNSTABILIZED 18 CHROMIUM, 8 NICKEL, (AISI TYPE 304)

CHEMICAL REQUIREMENTS:

	RANGE	VARIATION
CARBON MAX	0.08	0.01 OVER
MANGANESE	2.00	0.04 OVER
PHOSPHOROUS, MAX	0.045	0.01 OVER
SULFUR, MAX	0.03	0.005 OVER
SILICON	1.00	0.005 OVER
CHROMIUM	16.00 - 20.00	0.20
NICKEL	8.00 - 10.5	0.15

MECHANICAL REQUIREMENTS:

	MINIMUM
TENSILE STRENGTH (KSI)	75
YIELD STRENGTHS (KSI)	30
ELONGATION (%)	30
REDUCTION OF AREA (%)	50
HARDNESS (BRINELL)	223
HARDNESS (ROCKWELL)	B96

NOTES: MATERIALS ARE CARBIDE SOLUTION TREATED

IDENTIFICATION SYMBOL: B8

OTHER:

ALL BOLTS, NUTS & STUDS, UNLESS OTHERWISE SPECIFIED IN THE PURCHASE ORDER SHALL BE THREADED IN ACCORDANCE WITH ANSI/ASME B1.1, PAGE A-26, CLASS 2a FIT.

BOLT HEADS SHALL BE IN ACCORDANCE WITH THE DIMENSIONS OF ANSI/ASME B18.2.1, PAGE C-1. UNLESS OTHERWISE SPECIFIED IN THE PURCHASE ORDER, THE HEAVY HEX SCREWS SERIES SHOULD BE USED. NUTS SHALL CONFORM TO ASTM 194, UNLESS OTHERWISE SPECIFIED, THE HEAVY HEX SERIES SHALL BE USED.

ADDITIONAL INFORMATION CAN BE FOUND IN ASTM 193/A193M, DTD 1997 (ALLOY STEEL AND STAINLESS STEEL BOLTING MATERIALS FOR HIGH-TEMPERATURE SERVICES) AND IN ASTM A194/A194M, DTD 1997 (CARBON AND ALLOY STEEL NUTS FOR BOLTS FOR HIGH-TEMPERATURE SERVICE).

FLAT WASHERS: ALL WASHERS SHALL BE OF THE SAME MATERIAL AS THE NUTS.

SUBMITTAL USED FOR:
4"X1/8" FF RR GASKET

DuPont™ Teflon® PTFE Specifications

TYPICAL PROPERTIES of TEFLON® PTFE

ASTM or UL test	Property	PTFE (unfilled)	PTFE (25% glass filled)	PTFE (25% carbon filled)
	PHYSICAL			
D792	Density (lb/in³) (g/cm³)	0.078 2.16	0.081 2.25	0.075 2.08
D570	Water Absorption, 24 hrs (%)	< 0.01	0.02	0.05
	MECHANICAL			
D638	Tensile Strength (psi)	3,900	2,100	1,900
D638	Tensile Modulus (psi)	80,000	-	-
D638	Tensile Elongation at Break (%)	300	270	75
D790	Flexural Strength (psi)	No break	1,950	2,300
D790	Flexural Modulus (psi)	72,000	190,000	160,000
D695	Compressive Strength (psi)	3,500	1,000	1,700
D695	Compressive Modulus (psi)	70,000	110,000	87,000
D785	Hardness, Shore D	D50	D60	D62
D256	IZOD Notched Impact (ft-lb/in)	3.5	-	-
	THERMAL			
D696	Coefficient of Linear Thermal Expansion (x 10^{-5} in./in./°F)	7.5	6.4	6.0
D648	Heat Deflection Temp (°F / °C) at 264 psi	132 / 55	150 / 65	150 / 65
D3418	Melting Temp (°F / °C)	635 / 335	635 / 335	635 / 335
-	Max Operating Temp (°F / °C)	500 / 260	500 / 260	500 / 260
C177	Thermal Conductivity (BTU-in/ft²-hr-°F) (x 10^{-4} cal/cm-sec-°C)	1.70 5.86	3.1 10.6	4.5 15.5
UL94	Flammability Rating	V-O	V-O	V-O
	ELECTRICAL			
D149	Dielectric Strength (V/mil) short time, 1/8" thick	285	-	-
D150	Dielectric Constant at 1 MHz	2.1	2.4	-
D150	Dissipation Factor at 1 MHz	< 0.0002	0.05	-
D257	Volume Resistivity (ohm-cm)at 50% RH	> 10^{18}	> 10^{15}	10^{4}

NOTE: The information contained herein are typical values intended for reference and comparison purposes only. They should NOT be used as a basis for design specifications or quality control. Contact us for manufacturers' complete material property datasheets.
All values at 73°F (23°C) unless otherwise noted.

TEFLON ® is a registered trademark of DuPont

The gasket material is ordered in large rolls. The gaskets are then machined/cut by the supplier to meet the requirements of the project.

DEPARTMENT OF THE ARMY
ALBUQUERQUE DISTRICT, CORPS OF ENGINEERS
ALBUQERQUE DISTRICT OFFICE
4101 JEFFERSON PLAZA NE
ALBUQUERQUE, NM 87109

SUBMITTAL REVIEW VERIFICATION SHEET

PROJECT TITLE: Kirtland BFF Mid-Plume Pump and Treat System Expansion
CONTRACT NUMBER: W912DR-12-D-0006 DM01
DATE RECEIVED: 8-16-2017
DATE REVIEWED: 8-16-2017

DESCRIPTION OF ITEMS REVIEWED:

1. Tracer Wire

NO EXCEPTIONS TAKEN.	**X**
EXCEPTIONS AS NOTED ON DRAWINGS AND/OR ATTACHED SHEETS(S). RESUBMISSION NOT REQUIRED.	
EXCEPTIONS AS NOTED ON DRAWINGS AND/OR ATTACHED SHEETS(S). RESUBMISSION REQUIRED.	
RECEIPT ACKKNOWLEDGED.	

Notes:

NOTE: ITEMS REVIEWED AS TO GENERAL LAYOUT ONLY. DIMENSIONS AND QUANTITIES NOT CHECKED. REVIEW DOES NOT RELIEVE CONTRACTOR OF RESPONSIBILITIES FOR ANY ERRORS WHICH MAY EXIST AS CONTRACTOR SHALL BE RESPONSIBLE FOR DIMENSIONS AND DESIGN OF ADEQUATE CORRECTIONS, DETAILS AND SATISFACTORY CONSTRUCTION OF WORK.

SIGNATURE SANCHEZ.AMY.ELIZABETH.1454434338 **DATE** 8/16/2017

EA Engineering, Science, and Technology, Inc., PBC

Submittal Review Sheet 1

Project Name: **Kirtland BFF Mid-Plume Pump and Treat System Expansion**			Date Received: **8/15/17**		
Project Owner: **Kirtland Air Force Base**			Checked By: **Tyler Curley**		
Contractor: **RMCI, Inc.**	Engineer: **EA Engineering, Science and Technology, Inc., PBC.**		Log Page: **NA**		
Address: **6211 Chappell Rd NE, Albuquerque, NM 87113**	Address: **320 Gold Ave. SW, Suite 1300 Albuquerque, NM 87102**		EA No.: 62599DM01		
			Spec. Section: **31 00 00 2.3**		
			Drawing/Detail No.:		
ATTN: Phillip Johnson	ATTN: **Devon Jercinovic**		1st Sub		Re-Sub 1
Date Transmitted: **08/15/2017**	Prev. Transmittal Date: **8/1/15**				

Item No.	No. Copies	Description	Manufacturer	Mfg/Vendor Dwg or Detail	Action Taken*
1	1	Tracer wire	Pro Trace		A

The Action Designated Above is in Accordance with the Following Legend:

A – Furnish as Submitted
B – Furnish as Noted
C – Revise and Re-submit
1. Not enough information for review.
2. No reproducible submitted.
3. Copies illegible.
4. Not enough copies submitted.
5. Wrong sequence number.
6. Wrong resubmittal number.
7. Wrong Spec. Section.
8. Wrong form used.
9. See Comments.

D – Rejected
E – Engineer's Review not Required
1. Submittal not required.
2. Supplemental Information. Submittal retained for Information purposes only.
3. Information reviewed and approved on prior submittal.
4. See Comments.

Review is for general compliance with Contract Documents. No responsibility is assumed for correctness of dimensions or detail. Contractor is required to specify deviations from contract requirements. Lack of exceptions noted by Engineer does not waive Contractor's obligation to comply with Drawings and Specifications.

Comments:
Items reviewed and confirmed to meet requirements
Issues in Bold

Tracer wire has equal permformance rating plus increased tensile strength.

By: _____ Date: 8/15/17

Distribution: [1] Contractor [1] Engineer [1] Owner

RMCI, INC
PO Box 91447
Albuquerque NM 87199

RE: KAFB - Groundwater Conveyance Infrastructure Installation

ITEM	***PRODUCT***
	Proline 10GA Tracer Wire
Resubmittal 40 05 13-003	
NOTES:	
	Copper Clad Tracer Wire has = Signal Strength as solid copper. But is
	43% Stronger then Solid Copper. i.e. Tensile Strength

TRACER WIRE

PRO-TRACE® HF-CCS PE30

HF-CCS PE30 (HIGH-FLEX / OPEN-TRENCH)

Tracer Wire • High-Flex Copper Clad Steel (HF-CCS) • 21% IACS Conductivity • Corrosion Resistant
High-Density, High Molecular Weight Polyethylene (HMWPE-HDPE) Insulation • Moisture, Chemical, and Oil Resistant
Impact, Crush, and Abrasion Resistant • RoHS Compliant • Direct Burial Rated • 30 Volts • Made in the USA

"PRO-TRACE® HF-CCS -- FLEXIBILITY & STRENGTH -- IT'S THE FUTURE OF TRACER WIRE"

Applications and Information

- **PRO-TRACE® HF-CCS PE30** is used for tracer wire applications not exceeding 30 Volts. Tracer wire is used to conductively locate buried utility lines for the gas, water, sewer, telecommunication, and electrical markets.
- **PRO-TRACE® HF-CCS PE30** is designed to embody the flexibility, memory, and feel of copper. It also has a 43% higher break-load, minimizing damage during installation and while in service. Equal to copper in signal tracing performance. It simply outperforms copper tracer wire. Designed for open-trench and plow-in installations using 1 wire.
- Considerably lower in cost and great price stability compared to copper.
- RoHS Compliant, made in the USA, and works with connectors you already use.

Standards and References

PRO-TRACE® HF-CCS PE30 conductors meets or exceeds all applicable ASTM specifications, and requirements of the National Electrical Code.

- ASTM B910 / B190M: Standard Specification for Annealed Copper-Clad Steel Wire
- ASTM B170: Standard Specification for Oxygen-Free Electrolytic Copper
- ASTM D1248: Standard Specification for Polyethylene Plastics Extrusion Materials For Wire and Cable

Construction

PRO-TRACE® HF-CCS PE30 is a flexible, copper-clad steel tracer wire. A low carbon steel core, metallurgically bonded with a copper cladding, that is uniform and continuous, creating a bi-metal conductor that acts as one and is corrosion resistant. Special annealing processes are performed during the cladding process giving HF-CCS the flexibility and feel of copper, but 43% higher in strength which means less breaks then copper tracer wire.

PRO-TRACE® HF-CCS PE30 uses a 30 mil, high-density, high molecular weight polyethylene (HDPE) insulation. HDPE provides an excellent balance of surface smoothness, processing ease and electrical consistency. HDPE provides superior strength against underground elements that help prevent accidental breaks caused buy rocks in shifting soil conditions.

Specification Example

Tracer wire for open-trench installation shall be a 12 AWG solid, PRO-TRACE® HF-CCS PE30. Conductor shall be soft-drawn, 21% IACS, copper clad steel, utilizing a AISI 1006 low carbon steel core (required to meet break load and flexibility), with breakload of 282 lbs (55,000 psi). Conductor shall be extruded with a 30 mil, high density, high molecular weight polyethylene (HMW-HDPE) persuant to ASTM D1248 standard. Tracer wire shall be rated for direct burial use at 30 volts and RoHS compliant. Tracer wire shall be PRO-TRACE® HF-CCS PE30 as manufactured by **Pro-Line Safety Products** and made in the USA.

Specification Updated: 9.26.2011 09:23:00 CST

PRO-TRACE® is a registered trademark of Pro-Line Safety Products Co.

TABLE 1: CONDUCTOR (Physical, Mechanical and Electrical Properties)

PROPERTY	18 AWG	16 AWG	14 AWG	12 AWG	10 AWG	8 AWG
Conductor Type	HF-CCS	HF-CCS	HF-CCS	HF-CCS	HF-CCS	HF-CCS
Conductor Temper	Annealed	Annealed	Annealed	Annealed	Annealed	Annealed
Steel Grade	AISI 1006	AISI 1006	AISI 1006	AISI 1006	AISI 1006	AISI 1006
Copper Grade	UNS C10200	UNS C10200	UNS C10200	UNS C10200	UNS C10200	UNS C10200
Rated Break Load	70 lbs	111 lbs	177 lbs	282 lbs	448 lbs	713 lbs
Rated Tensile Strength	55,000 psi	55,000 psi	55,000 psi	55,000 psi	55,000 psi	55,000 psi
Elongation	20.0%	20.0%	20.0%	21.0%	21.0 %	22.0%
Nominal Copper Thickness (% of Diameter)	3.0%	3.0%	3.0%	3.0%	3.0%	3.0%
Nominal Copper Weight (Per 1,000')	13.0%	13.0%	13.0%	13.0%	13.0%	13.0%
Nominal DC Resistance	30.399 ohms	19.119 ohms	12.024 ohms	7.562 ohms	4.756 ohms	2.991 ohms

TABLE 2: INSULATION (Physical, Mechanical and Electrical Properties)

TEST DESCRIPTION	ASTM STANDARD	TYPICAL VALUES
Density @ 23°C	ASTM D1505	0.945 g/cm^3
Melt Flow Rate	ASTM D1238	0.70 g/10 min
Tensile Strength	ASTM D638	3,400 psi
Tensile Strength Retention	ASTM D638	90% after 48 hours @ 100°C
Tensile Elongation	ASTM D638	500%
Tensile Elongation Retention	ASTM D638	90% after 48 hours @ 100°C
Environmental Stress Cracking	ASTM D1693	0 failures @ 48 hours
Thermal Stress Cracking	ASTM D2951	0 failures @ 96 hours
Brittleness Temperature	ASTM D746	-76°C
Melting Temperature	ASTM D3418	260°C
Oxidative Induction Time	ASTM D3895	170 min @ 200°C
Dielectric Constant	ASTM D1531	2.32 @ 1 MHz
Dissipation Factor	ASTM D1531	0.00006 @ 1 MHz
DC Volume Resistivity @ 23°C	ASTM D257	> 1 x 10^{15} ohm-cm

PRODUCT PART NO.	PRODUCT DESCRIPTION	RATED BREAK LOAD	RATED TENSILE STRENGTH	HDPE INSULATION THICKNESS	NOMINAL O.D.	APPROX. WEIGHT PER 1,000 FT		STANDARD PACKAGES
						CCS WEIGHT	SHIPPING WEIGHT	
WEIGHTS, MEASUREMENTS AND PACKAGING								
74418XXXX	18 SOL HF-CCS PE30	70 lbs	55,000 psi	0.030"	0.101"	4.4191	7.14	500' / 1000' / 2500'
74416XXXX	16 SOL HF-CCS PE30	111 lbs	55,000 psi	0.030"	0.111"	7.0219	10.15	CUSTOM ORDER
74411XXXX	14 SOL HF-CCS PE30	177 lbs	55,000 psi	0.030"	0.124"	11.1800	14.82	500' / 1000' / 2500'
74412XXXX	12 SOL HF-CCS PE30	282 lbs	55,000 psi	0.030"	0.141"	17.7644	22.05	500' / 1000' / 2500'
74413XXXX	10 SOL HF-CCS PE30	448 lbs	55,000 psi	0.030"	0.162"	28.2537	33.35	500' / 1000' / 2500'
74414XXXX	8 SOL HF-CCS PE30	713 lbs	55,000 psi	0.030"	0.189"	44.9297	51.05	CUSTOM ORDER

INSULATION COLOR & REEL LENGTH			
COLOR	500' REEL	1000' REEL	2500' REEL
BLACK	0132	0141	0147
BLUE	0232	0241	0247
GREEN	0532	0541	0547
ORANGE	0632	0641	0647
PURPLE	0832	0841	0847
RED	0932	0941	0947
WHITE	1132	1141	1147
YELLOW	1232	1241	1247
SOME PART NUMBERS MAY BE SUBJECT TO MINS			

REEL & PACKAGING INFORMATION					
SIZE	LENGTH	MATERIAL	REEL DIMENSION	ARBOR HOLE	PALLET QUANTITY
14 AWG	500	PLYWOOD (TREATED)	8" x 4"	1.5"	162,000 FT
	1000	PLYWOOD (TREATED)	8" x 9"	1.5"	180,000 FT
	2500	PLYWOOD (TREATED)	12" x 6"	1.5"	180,000 FT
12 AWG	500	PLYWOOD (TREATED)	8" x 6"	1.5"	126,000 FT
	1000	PLYWOOD (TREATED)	8" x 9"	1.5"	108,000 FT
	2500	PLYWOOD (TREATED)	12" x 9"	1.5"	120,000 FT
10 AWG	500	PLYWOOD (TREATED)	8" x 9"	1.5"	72,000 FT
	1000	PLYWOOD (TREATED)	12" x 6"	1.5"	80,000 FT
	2500	PLYWOOD (TREATED)	12" x 12"	1.5"	80,000 FT
8 AWG	500	PLYWOOD (TREATED)	8" x 9"	1.5"	54,000 FT
	1000	PLYWOOD (TREATED)	12" x 9"	1.5"	48,000 FT
	2500	PLYWOOD (TREATED)	16" x 10"	1.5"	45,000 FT

TRACER WIRE

PRO-TRACE® HF-CCS PE30

Specification Updated: 9.26.2014 09:23:00 CST

PRO-LINE SAFETY PRODUCTS
A DIVISION OF PRO-PAK IND, INC.

PRO-LINE SAFETY PRODUCTS COMPANY
1099 ATLANTIC DRIVE, UNIT 1 • WEST CHICAGO, IL 60185
TOLL FREE: 800.554.3424

MADE IN THE U.S.A. WITH PRIDE

DEPARTMENT OF THE ARMY
ALBUQUERQUE DISTRICT, CORPS OF ENGINEERS
ALBUQERQUE DISTRICT OFFICE
4101 JEFFERSON PLAZA NE
ALBUQUERQUE, NM 87109

SUBMITTAL REVIEW VERIFICATION SHEET

PROJECT TITLE: Kirtland BFF Mid-Plume Pump and Treat System Expansion
CONTRACT NUMBER: W912DR-12-D-0006 DM01
DATE RECEIVED: 8-16-2017
DATE REVIEWED: 8-16-2017

DESCRIPTION OF ITEMS REVIEWED:

1. Junction Vault Steel Piping

NO EXCEPTIONS TAKEN.	**X**
EXCEPTIONS AS NOTED ON DRAWINGS AND/OR ATTACHED SHEETS(S). RESUBMISSION NOT REQUIRED.	
EXCEPTIONS AS NOTED ON DRAWINGS AND/OR ATTACHED SHEETS(S). RESUBMISSION REQUIRED.	
RECEIPT ACKKNOWLEDGED.	

Notes:

NOTE: ITEMS REVIEWED AS TO GENERAL LAYOUT ONLY. DIMENSIONS AND QUANTITIES NOT CHECKED. REVIEW DOES NOT RELIEVE CONTRACTOR OF RESPONSIBILITIES FOR ANY ERRORS WHICH MAY EXIST AS CONTRACTOR SHALL BE RESPONSIBLE FOR DIMENSIONS AND DESIGN OF ADEQUATE CORRECTIONS, DETAILS AND SATISFACTORY CONSTRUCTION OF WORK.

SIGNATURE SANCHEZ.AMY.ELIZABETH.1454434338 Digitally signed by SANCHEZ.AMY.ELIZABETH.1454434338 DN: c=US, o=U.S. Government, ou=DoD, ou=PKI, ou=PKI, cn=SANCHEZ.AMY.ELIZABETH.1454434338 Date: 2017.08.16 15:25:37 -06'00' **DATE** 8/16/2017

EA Engineering, Science, and Technology, Inc., PBC

Submittal Review Sheet 1

Project Name: **Kirtland BFF Mid-Plume Pump and Treat System Expansion**		Date Received: **8/15/17**			
Project Owner: **Kirtland Air Force Base**		Checked By: **Tyler Curley**			
Contractor: **RMCI, Inc.**	Engineer: **EA Engineering, Science and Technology, Inc., PBC.**	Log Page: **NA**			
Address: **6211 Chappell Rd NE, Albuquerque, NM 87113**	Address: **320 Gold Ave. SW, Suite 1300 Albuquerque, NM 87102**	EA No.: 62599DM01			
		Spec. Section: **40 05 13 2.2.3.3**			
		Drawing/Detail No.: **NA**			
ATTN: Phillip Johnson	ATTN: **Devon Jercinovic**	1st Sub		Re-Sub	1
Date Transmitted: **08/15/2017**	Prev. Transmittal Date: **8/1/15**				

Item No.	No. Copies	Description	Manufacturer	Mfg/Vendor Dwg or Detail	Action Taken*
1	1	Junction Vault Steel Piping	Custom Piping Sytems		A

The Action Designated Above is in Accordance with the Following Legend:

A – Furnish as Submitted
B – Furnish as Noted
C – Revise and Re-submit
1. Not enough information for review.
2. No reproducible submitted.
3. Copies illegible.
4. Not enough copies submitted.
5. Wrong sequence number.
6. Wrong resubmittal number.
7. Wrong Spec. Section.
8. Wrong form used.
9. See Comments.

D – Rejected
E – Engineer's Review not Required
1. Submittal not required.
2. Supplemental Information. Submittal retained for Information purposes only.
3. Information reviewed and approved on prior submittal.
4. See Comments.

Review is for general compliance with Contract Documents. No responsibility is assumed for correctness of dimensions or detail. Contractor is required to specify deviations from contract requirements. Lack of exceptions noted by Engineer does not waive Contractor's obligation to comply with Drawings and Specifications.

Comments:
Items reviewed and confirmed to meet requirements
Issues in Bold

A53 Grade B carbon steel conforms to Specs

Flanges conform to the Specs.

By: _____ Date: 8/16/17

Distribution: [1] Contractor [1] Engineer [1] Owner

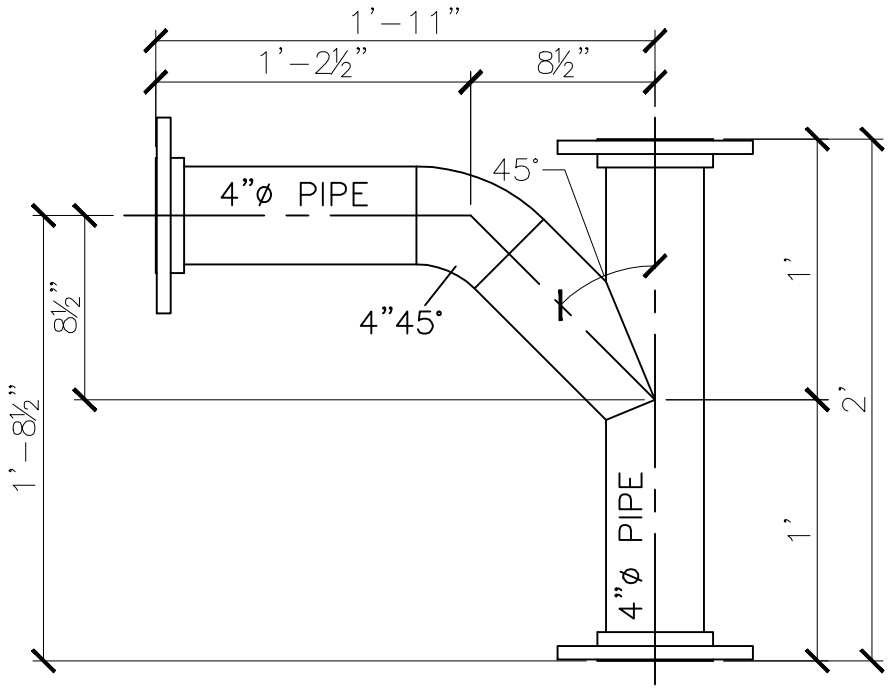

1. Pipe: Std. Wt. A53 Grade B

2. Fittings: ASTM A-234

3. Flanges: Class 150, 1/16" Raised Face, Conforming to ASTM A105/A105M and ASME B16-5.

4. Lining: Bare

5. Coating: Bare

6. All dimensions are theoretical. Contractor must verify depth of existing infrastructure and all dimensions prior to fabrication.

7. All welds to be performed by a certified welder in accordance with ASME Section IX BPVC.

APPROVED:_____

DATE:_____

8/9/17
N.T.S.
Dwg. Number 1.0

KIRTLAND AIR FORCE BASE
4" JUNCTION VAULT PIPING

Custom Piping Systems LLC
4230 Milling Rd
San Antonio, TX. 78219
P-210.867.6356 F-210.558.9975
"Providing Custom Fabrications for the Water & Waste Water Industries"

TEL: 708/594-1700
FAX: 708/458-0106
www.weldbend.com

For Ring Type Joint Facing Dimension information see page 148.

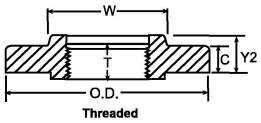

Threaded

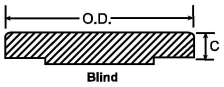

Blind

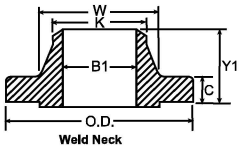

Weld Neck

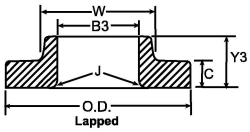

Lapped

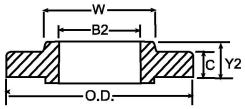

Slip-on

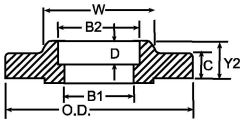

Socket Weld

Pipe Size	Outside Diameter of Flange	Thickness of Flange (Min.)	Thickness of Lap Joint (Min.)	Diameter of Hub *	Diameter of Weld Neck	Length Through Hub			Thread Length (Min.)	Bore			Lap Joint Radius	Depth of Socket
						Threaded, Slip-on & Socket Weld	Lap Joint	Weld Neck		Slip-on & Socket Weld (Min.)	Lap Joint (Min.)	Weld Neck & Socket Weld		
	O.D.	C	C	W	K	Y2	Y3	Y1	T	B2	B3	B1 ▲	J	D
ASME B16.5														
½	3.50	0.38	0.44	1.19	0.84	0.56	0.62	1.81	0.62	0.88	0.90	0.62	0.12	0.38
¾	3.88	0.44	0.50	1.50	1.05	0.56	0.62	2.00	0.62	1.09	1.11	0.82	0.12	0.44
1	4.25	0.50	0.56	1.94	1.32	0.62	0.69	2.12	0.69	1.36	1.38	1.05	0.12	0.50
1 ¼	4.62	0.56	0.62	2.31	1.66	0.75	0.81	2.19	0.81	1.70	1.72	1.38	0.19	0.56
1 ½	5.00	0.62	0.69	2.56	1.90	0.81	0.88	2.38	0.88	1.95	1.97	1.61	0.25	0.62
2	6.00	0.69	0.75	3.06	2.38	0.94	1.00	2.44	1.00	2.44	2.46	2.07	0.31	0.69
2 ½	7.00	0.81	0.88	3.56	2.88	1.06	1.12	2.69	1.12	2.94	2.97	2.47	0.31	0.75
3	7.50	0.88	0.94	4.25	3.50	1.12	1.19	2.69	1.19	3.57	3.60	3.07	0.38	0.81
3 ½	8.50	0.88	0.94	4.81	4.00	1.19	1.25	2.75	1.25	4.07	4.10	3.55	0.38	
4	9.00	0.88	0.94	5.31	4.50	1.25	1.31	2.94	1.31	4.57	4.60	4.03	0.44	
5	10.00	0.88	0.94	6.44	5.56	1.38	1.44	3.44	1.44	5.66	5.69	5.05	0.44	
6	11.00	0.94	1.00	7.56	6.63	1.50	1.56	3.44	1.56	6.72	6.75	6.07	0.50	
8	13.50	1.06	1.12	9.69	8.63	1.69	1.75	3.94	1.75	8.72	8.75	7.98	0.50	
10	16.00	1.12	1.19	12.00	10.75	1.88	1.94	3.94	1.94	10.88	10.92	10.02	0.50	
12	19.00	1.19	1.25	14.38	12.75	2.12	2.19	4.44	2.19	12.88	12.92	12.00	0.50	
14	21.00	1.31	1.38	15.75	14.00	2.19	3.12	4.94	2.25	14.14	14.18	13.25	0.50	
16	23.50	1.38	1.44	18.00	16.00	2.44	3.44	4.94	2.50	16.16	16.19	15.25	0.50	
18	25.00	1.50	1.56	19.88	18.00	2.62	3.81	5.44	2.69	18.18	18.20	17.25	0.50	
20	27.50	1.62	1.69	22.00	20.00	2.81	4.06	5.62	2.88	20.20	20.25	19.25	0.50	
24	32.00	1.81	1.88	26.12	24.00	3.19	4.38	5.94	3.25	24.25	24.25	23.25	0.50	
		WN BLD												
ASME B16.47 Series A														
30	38.75	2.88 2.88		30.75	30.00			5.32						
36	46.00	3.50 3.50		36.75	36.00			6.13						
42	53.00	3.75 3.75		43.00	42.00			6.69						
48	59.50	4.19 4.19		49.12	48.00			7.50						
		WN BLD												
ASME B16.47 Series B														
30	34.94	1.69 1.94		31.00	30.06			3.88						
36	41.62	2.00 2.25		37.19	36.06			4.57						
42	48.25	2.25 2.65		43.38	42.12			5.19						
48	54.81	2.50 3.00		48.50	48.12			5.82						

WELDBEND NOTES

1. Standard flange facings on page 146.
2. All dimensions are in inches.
3. Calculated flange weights on page 99.
4. For dimensional tolerances see page 144.
5. Weld end preparations on page 154.
6. Thread standards on page 156.
7. Blind flanges may be produced with or without hubs.
8. All flanges conform to ASTM A105/ASME SA105.
9. All flanges ½"-24" conform to ASME B16.5.
   All flanges 30" and larger conform to ASME B16.47.

* A taper shall not exceed 7 degrees on threaded, slip-on and lapped flanges.
▲ Dimensions listed for socket weld and weld neck flanges are for Standard bore unless specified by purchaser.

Copyright © 2010 by Weldbend Corporation. All Rights Reserved.

DEPARTMENT OF THE ARMY
ALBUQUERQUE DISTRICT, CORPS OF ENGINEERS
ALBUQERQUE DISTRICT OFFICE
4101 JEFFERSON PLAZA NE
ALBUQUERQUE, NM 87109

SUBMITTAL REVIEW VERIFICATION SHEET

PROJECT TITLE: Kirtland BFF Mid-Plume Pump and Treat System Expansion
CONTRACT NUMBER: W912DR-12-D-0006 DM01
DATE RECEIVED: 09-13-2017
DATE REVIEWED: 09-13-2017

DESCRIPTION OF ITEMS REVIEWED:

1. Junction Vault Check Valve

NO EXCEPTIONS TAKEN.	**X**
EXCEPTIONS AS NOTED ON DRAWINGS AND/OR ATTACHED SHEETS(S). RESUBMISSION NOT REQUIRED.	
EXCEPTIONS AS NOTED ON DRAWINGS AND/OR ATTACHED SHEETS(S). RESUBMISSION REQUIRED.	
RECEIPT ACKKNOWLEDGED.	

Notes:

NOTE: ITEMS REVIEWED AS TO GENERAL LAYOUT ONLY. DIMENSIONS AND QUANTITIES NOT CHECKED. REVIEW DOES NOT RELIEVE CONTRACTOR OF RESPONSIBILITIES FOR ANY ERRORS WHICH MAY EXIST AS CONTRACTOR SHALL BE RESPONSIBLE FOR DIMENSIONS AND DESIGN OF ADEQUATE CORRECTIONS, DETAILS AND SATISFACTORY CONSTRUCTION OF WORK.

SIGNATURE SANCHEZ.AMY.ELIZABETH.1454434338 Digitally signed by SANCHEZ.AMY.ELIZABETH.1454434338 DN: c=US, o=U.S. Government, ou=DoD, ou=PKI, ou=USA, cn=SANCHEZ.AMY.ELIZABETH.1454434338 Date: 2017.09.13 11:27:12 -06'00' **DATE** 9/13/2017

EA Engineering, Science, and Technology, Inc., PBC

Submittal Review Sheet 1

Project Name: **Kirtland BFF Mid-Plume Pump and Treat System Expansion**			Date Received: **9/12/17**	
Project Owner: **Kirtland Air Force Base**			Checked By: **Tyler Curley**	
Contractor: **RMCI, Inc.**	Engineer: **EA Engineering, Science and Technology, Inc., PBC.**		Log Page: **NA**	
Address: **6211 Chappell Rd NE, Albuquerque, NM 87113**	Address: **320 Gold Ave. SW, Suite 1300 Albuquerque, NM 87102**		EA No.: 62599DM01	
			Spec. Section: **40 05 13 2.6.4.1**	
			Drawing/Detail No.:	
ATTN: Phillip Johnson	ATTN: **Devon Jercinovic**		1st Sub	Re-Sub
Date Transmitted: **09/13/2017**	Prev. Transmittal Date:			

Item No.	No. Copies	Description	Manufacturer	Mfg/Vendor Dwg or Detail	Action Taken*
1	1	Junction Vault Check Valve	Mueller Co.		A

The Action Designated Above is in Accordance with the Following Legend:

A – Furnish as Submitted
B – Furnish as Noted
C – Revise and Re-submit
1. Not enough information for review.
2. No reproducible submitted.
3. Copies illegible.
4. Not enough copies submitted.
5. Wrong sequence number.
6. Wrong resubmittal number.
7. Wrong Spec. Section.
8. Wrong form used.
9. See Comments.

D – Rejected
E – Engineer's Review not Required
1. Submittal not required.
2. Supplemental Information. Submittal retained for Information purposes only.
3. Information reviewed and approved on prior submittal.
4. See Comments.

Review is for general compliance with Contract Documents. No responsibility is assumed for correctness of dimensions or detail. Contractor is required to specify deviations from contract requirements. Lack of exceptions noted by Engineer does not waive Contractor's obligation to comply with Drawings and Specifications.

Comments:
Items reviewed and confirmed to meet requirements
Issues in Bold

Check valve conforms to specs (flanges are compatible with ASME B16.5)

By: _____ Date: 9/13/17

Distribution: [1] Contractor [1] Engineer [1] Owner

September 12, 2017

To Whom It Might Concern,

There is a lot of confusion regarding flange standards. There are three standards that are often referenced when specifying flanges:

- ANSI/ASME B16.1 – Gray Iron Pipe Flanges and Flanged Fittings: Classes 25, 125 and 250
- ANSI/ASME B16.42 – Ductile Iron Pipe Flanges and Flanged Fittings: Classes 150 and 300
- ANSI/ASME B16.5 – Pipe Flanges and Flanged Fittings: NPS 1/2 through NPS 24 Metric/Inch Standard

ANSI/ASME B16.5 Class 150 (aka 150#) is a standard for flanges that are on the end of steel pipe or flanges made for steel pipe. Mueller manufacturers both Gray Iron and Ductile Iron Flat Face (FF); Gray Iron valves comply with ANSI/ASME B16.1 Class 125 and Ductile Iron valves comply with ANSI/ASME B16.42 Class 150.

B16.1 Class 125, B16.42 Class 150 and B16.5 Class 150 are dimensionally the same with the material being the significant difference. Therefore FF valves and fittings manufactured to these standards will mate. FF and Raised Face flanges should not be used together.

For a more complete explanation of these standards please reference the attached white paper found on pages 2 & 3 of this document.

MUELLER CO.

Amanda Owens

9/12/17

Amanda Owens
Date

Application Engineer
Water Products Division
Mueller Company
1401 Mueller Ave.
Chattanooga TN, 37406
aowens@muellercompany.com

What's Up With Flanges?

There's a lot of confusion regarding pressure ratings of flanged valves for water works service. Industry standards, manufacturer's literature and project specifications often contradict or are subject to interpretation which leads to delays, improper equipment and potential system failures.

ASME and ANSI

Most flanged valves for water works service in North America are supplied with flanges conforming to dimensional standards developed by the American Society of Mechanical Engineers (ASME) and accredited by the American National Standards Institute (ANSI). Various "committees" within ASME are charged with developing, issuing and maintaining individual standards. The ASME "B16" committees have this responsibility for valves, flanges and flanged fittings. Standardized dimensions for cast iron flanges and flanged fittings are provided in ANSI/ASME B16.1 standard, steel and stainless steel dimensions in the ANSI/ASME B16.5 standard and ductile iron in the ANSI/ASME B16.42 standard. Compliance with the applicable standardized flange and flanged fitting dimensions is voluntary but ensures uniformity so that flanged valves from one manufacturer will bolt to flanges from another.

Flange Classes

There are four common pressure "classes" within the ANSI/ASME standards listed above. Class 125 and Class 250 are "cast iron" flanges and flanged fittings while Class 150 and Class 300 are ductile iron, steel or stainless steel. Hence, ANSI/ASME B16.1 Class 125 flanges are made from cast iron, ANSI/ASME B16.5 Class 150 can be made from steel or stainless and ANSI/ASME B16.42 Class 150 is made from ductile iron.

However, the bolting pattern is the same for both Class 125 and 150 so, regardless of material, they will bolt together. This is also the case for Class 250 and 300. Cast iron flanges are usually supplied "flat faced" while ductile iron and steel are usually "raised face." When bolting a cast iron flange to a steel or ductile iron flange, the "raised face" of the mating flange should be removed to avoid breaking the cast iron flange when tightening the bolts.

Pressure and Temperature

The ANSI/ASME standards also provide pressure ratings for various "classes" of flanges and flanged fittings. The pressure ratings change based on the material from which it is made and/or the temperature at which it operates. The nominal flange "Class" (e.g., Class 125) generally represents the maximum working pressure at the temperature of saturated steam at that pressure. For example, an ANSI/ASME B16.1 Class 125 flange is rated for 125 PSI at 353º F.

But when used at colder temperatures, such as that of water, the ANSI/ASME maximum working pressure is higher than the nominal class. ANSI/ASME B16.1 rates Class 125 flanges and flanged fittings made from high strength cast iron for 200 PSI at temperatures up to 150º F. ANSI/ASME B16.42 rates Class 150 ductile iron flanges and fittings for 250 PSI at temperatures up to 100º F.

Complete flange and flanged fitting pressure-temperature ratings can be found in tables within the applicable ANSI/ASME B16.x standard.

Are you confused?

It gets worse.

Enter AWWA
The American Water Works Association (AWWA) also has committees charged with addressing the particular needs of the water works industry.

The AWWA C110 committee considered the ANSI/ASME pressure ratings too conservative when used on water. Through burst testing they determined flanges and fittings made from high strength cast iron and with dimensions conforming to ANSI/ASME B16.1 Class 125 could be rated for a working pressure of 250 PSI with at least a 3.0 safety factor. This allows Class 125 cast iron flanges and flanged fittings to have the same pressure rating as Pressure Class 250 ductile iron pipe.

AWWA C110 does not address ANSI/ASME B16.1 Class 250 cast iron flanges or flanged fittings that have a 300 to 500 PSI or higher pressure rating and a totally different bolt pattern than Class 125. Mistakes sometimes occur because cast iron or ductile iron flanged fittings have "250" cast in them (indicating a 250 PSI pressure rating) but the flange dimensions and bolt pattern conform to ANSI/ASME B16.1 Class 125 (or ANSI/ASME B16.42 Class 150). These will not bolt to an ANSI/ASME B16.1 Class 250 flange!

Valve Pressure Ratings
ANSI/ASME B16 and AWWA C110 pressure ratings are based on flanges and flanged fittings conforming to standardized geometry and dimensions, including wall thickness. By comparison, valves are available in countless types, shapes, configurations and geometries that vary from one manufacturer to the other.

While the valve's connecting flanges may conform to ANSI/ASME B16.x dimensions, there are many reasons why its pressure rating may not be the same as a flange or flanged fitting made from identical material as the valve. It is the responsibility of the valve manufacturer to establish the pressure ratings for their products. The design professional should consult the manufacturer's published information and not assume it is the same as the flange or fitting being bolted to it.

However, the pressure ratings of many ANSI/ASME B16.x flanged valves used in waterworks service are defined in AWWA standards applicable to that type of valve. The pressure rating (or Pressure Class) listed in the AWWA valve standard may or may not conform to the ANSI/ASME B16.x or the AWWA C110 pressure rating, leading to even more confusion.

The AWWA "valve" standards which define a Pressure Class or pressure rating are too numerous to detail in this commentary but include C500 gate valves, C504 butterfly valves, C507 ball valves, C508 check valves and C517 eccentric plug valves. The design professional should become familiar with the applicable AWWA valve standard and select the pressure class that is adequate for the working pressure and be aware that the valve's pressure class and connection flange class may not correspond.

One should remember that "a chain is only as strong as its weakest link" so every component of a piping system should be able to withstand the highest pressure that could be realized at the location where it is installed.

2"-12" SWING TYPE LEVER AND WEIGHT CHECK VALVES – FL. X FL.

- Catalog number---
  A-2600-6-01BB flanged ends, with bronze disc facing
  A-2602-6-01B1 flanged ends, with rubber disc facing
- Sizes---2", 2-1/2", 3", 4", 6", 8", 10", 12"
- Meets all applicable parts of ANSI/AWWA C508 Standard
- Epoxy coated interior & exterior for corrosion resistance
- Certified to NSF 61
- Flanged end dimensions and drilling comply with ANSI B16.1, class 125
- Iron body, bronze mounted (IBBM)
- Choice of bronze or rubber disc facing
- For vertical or horizontal installation
- O-ring sealed stuffing box
- Adjustable weight to control opening and closing of clapper, lever can be installed on either side of valve
- 200 psig (1379 kPa) maximum working pressure, 400 psig (2758 kPa) test pressure

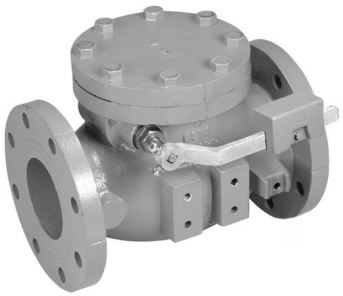

A-2600-6-01BB

Options

- Stainless Steel Nuts & Bolts
- Allen Bradley Limit Switch
- Tapped Bosses
- PN 10/PN 16 Flange Drilling 4"-12"

Check Valve Parts (2011-present)

Catalog Part No.	Description	Material	Material Standard
C-301	Retaining Plug	Brass	ANSI B21
C-306	O-ring C	Rubber	ASTM D2000, BK 707
C-307	O-ring B	Rubber	ASTM D2000, BK 707
C-308	Gasket	Rubber	ASTM D2000, BK 807
C-309	Cover Bolt	Zinc Coated Steel	A307 Grade B
C-310	Washer	Brass	ANSI B21
C-311	Spacer	Brass	ANSI B21
C-312	Disc Nut	Brass	ANSI B21
C-313	Disc Stud	Brass	ANSI B21
C-314	Snap Ring	Stainless Steel	—
C-315	Weight Bolt & Nut	Zinc Coated Steel	A307 Grade B
C-318	Pin	Stainless Steel	ASTM A276 Type 304
C-319	Test Plug	Malleable Iron	A47
C-320	Key	Stainless Steel	ASTM A276 Type 304
C-321	Hinge Pin	Stainless Steel	ASTM A276 Type 304
C-322	Weight Arm	Ductile Iron	A536 Gr. 65-45-12
C-323	Bolt & Nut	Zinc Coated Steel	A307 Grade B
C-325	Seat Nut	Brass	ANSI B21
C-327	Body Seat Ring	Bronze	ANSI B62
C-329	Arm	Ductile Iron	A536 Gr. 65-45-12
C-330	Weight	Cast Iron	ASTM A126 Cl. B
C-331	Cover	Cast Iron	ASTM A126 Cl. B
C-332	Disc	Cast Iron	ASTM A126 Cl. B
C-333	Body	Cast Iron	ASTM A126 Cl. B
Rubber Faced Disc Parts			
C-316	Disc Seat Bolt	Stainless Steel	ASTM A276 Type 304
C-326	Disc Seat Ring	Rubber	ASTM D2000, BK 807
C-328	Seat Holder	Cast Iron*	ASTM A126 Cl. B
Bronze Faced Disc Parts			
C-326	Disc Seat Ring	Bronze	ANSI B62

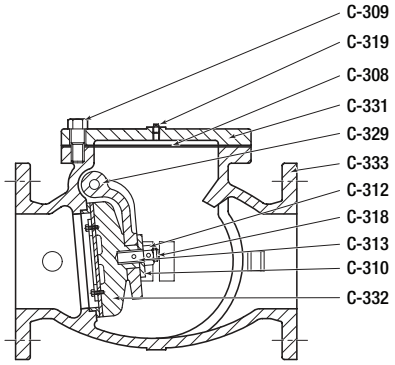

Valve body and clapper
Rubber faced disc shown

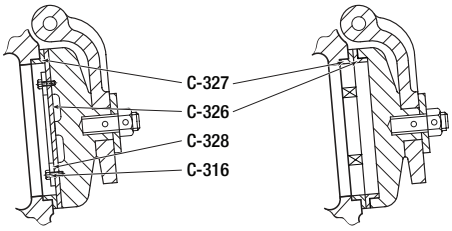

Rubber faced disc clapper

Bronze faced disc clapper

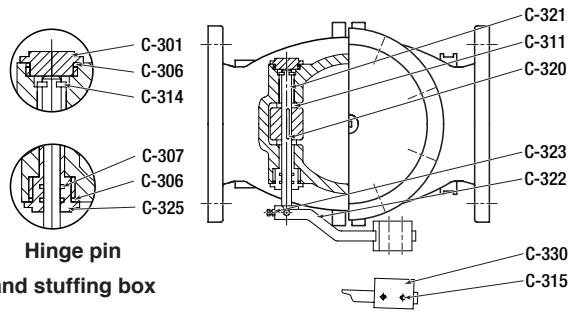

Hinge pin
and stuffing box

Lever assembly and weight

*2"- 6" sizes are cast iron, ASTM A126 Cl. B, 8"- 12" sizes are ductile iron ASTM A536 Gr. 65-45-12.

2"-12" SWING TYPE LEVER AND WEIGHT CHECK VALVE DIMENSIONS-FL.X FL.

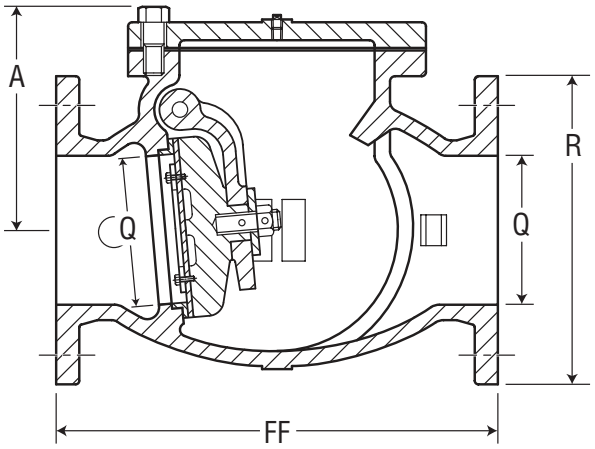

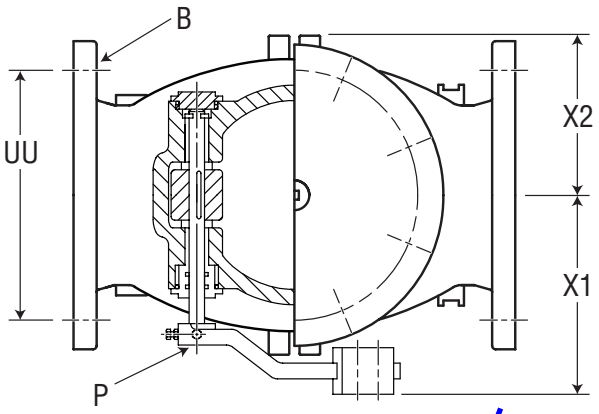

Dimension**	Size*			
	2"	2-1/2"	3"	4"
Q (bore)	2.00	2.50	3.00	4.00
R	6.00	7.00	7.50	9.00
FF	8.00	8.50	9.50	11.50
X1	5.13	5.13	6.31	7.13
X2	2.81	3.56	4.06	4.94
A	4.31	5.69	6.06	6.88
P (hinge pin diameter)	.38	.38	.50	.50
B (number and size of bolts)	4--.75	4--.75	4--.75	8--.75
UU (bolt circle diameter)	4.75	5.50	6.00	7.50
Weight	35	51	67	91

Dimension**	Size*			
	6"	8"	10"	12"
Q (bore)	6.00	8.00	10.00	12.00
R	11.00	13.50	16.00	19.00
FF	14.00	19.50	24.50	27.50
X1	8.69	10.88	12.25	14.38
X2	5.94	8.06	9.19	10.81
A	8.50	9.94	11.19	13.56
P	.75	.88	1.00	1.13
B (number and size of bolts)	8--.88	8--.88	12--1.00	12--1.00
UU (bolt circle diameter)	9.50	11.75	14.25	17.00
Weight	164	282	420	638

*Nominal
**All dimensions are in inches. All weights are in pounds and are approximate.

DEPARTMENT OF THE ARMY
ALBUQUERQUE DISTRICT, CORPS OF ENGINEERS
ALBUQERQUE DISTRICT OFFICE
4101 JEFFERSON PLAZA NE
ALBUQUERQUE, NM 87109

SUBMITTAL REVIEW VERIFICATION SHEET

PROJECT TITLE: Kirtland BFF Mid-Plume Pump and Treat System Expansion
CONTRACT NUMBER: W912DR-12-D-0006 DM01
DATE RECEIVED: 08-03-2017
DATE REVIEWED: 08-03-2017

DESCRIPTION OF ITEMS REVIEWED:

1. 40 05 13-006 Junction Vault Pipe Supports

NO EXCEPTIONS TAKEN.	**X**
EXCEPTIONS AS NOTED ON DRAWINGS AND/OR ATTACHED SHEETS(S). RESUBMISSION NOT REQUIRED.	
EXCEPTIONS AS NOTED ON DRAWINGS AND/OR ATTACHED SHEETS(S). RESUBMISSION REQUIRED.	
RECEIPT ACKKNOWLEDGED.	

Notes:

NOTE: ITEMS REVIEWED AS TO GENERAL LAYOUT ONLY. DIMENSIONS AND QUANTITIES NOT CHECKED. REVIEW DOES NOT RELIEVE CONTRACTOR OF RESPONSIBILITIES FOR ANY ERRORS WHICH MAY EXIST AS CONTRACTOR SHALL BE RESPONSIBLE FOR DIMENSIONS AND DESIGN OF ADEQUATE CORRECTIONS, DETAILS AND SATISFACTORY CONSTRUCTION OF WORK.

SIGNATURE SANCHEZ.AMY.ELIZABETH.1454434338 Digitally signed by SANCHEZ.AMY.ELIZABETH.1454434338 DN: c=US, o=U.S. Government, ou=DoD, ou=PKI, ou=USA, cn=SANCHEZ.AMY.ELIZABETH.1454434338 Date: 2017.08.03 15:29:32 -06'00' **DATE** 8/3/2017

EA Engineering, Science, and Technology, Inc., PBC

Submittal Review Sheet 1

Project Name: **Kirtland BFF Mid-Plume Pump and Treat System Expansion**				Date Received: **8/1/17**		
Project Owner: **Kirtland Air Force Base**				Checked By: **Tyler Curley**		
Contractor: **RMCI, Inc.**	Engineer: **EA Engineering, Science and Technology, Inc., PBC.**			Log Page: **NA**		
Address: **6211 Chappell Rd NE, Albuquerque, NM 87113**	Address: **320 Gold Ave. SW, Suite 1300 Albuquerque, NM 87102**			EA No.: 62599DM01		
				Spec. Section: **40 05 13 2.10**		
				Drawing/Detail No.:		
ATTN: Phillip Johnson	ATTN: **Devon Jercinovic**			1st Sub		Re-Sub
Date Transmitted: **08/01/2017**	Prev. Transmittal Date:					

Item No.	No. Copies	Description	Manufacturer	Mfg/Vendor Dwg or Detail	Action Taken*
1	1	Junction Vault Pipe Supports	Material Resources Inc.		A

The Action Designated Above is in Accordance with the Following Legend:

A – Furnish as Submitted
B – Furnish as Noted
C – Revise and Re-submit
1. Not enough information for review.
2. No reproducible submitted.
3. Copies illegible.
4. Not enough copies submitted.
5. Wrong sequence number.
6. Wrong resubmittal number.
7. Wrong Spec. Section.
8. Wrong form used.
9. See Comments.

D – Rejected
E – Engineer's Review not Required
1. Submittal not required.
2. Supplemental Information. Submittal retained for Information purposes only.
3. Information reviewed and approved on prior submittal.
4. See Comments.

Review is for general compliance with Contract Documents. No responsibility is assumed for correctness of dimensions or detail. Contractor is required to specify deviations from contract requirements. Lack of exceptions noted by Engineer does not waive Contractor's obligation to comply with Drawings and Specifications.

Comments:
Items reviewed and confirmed to meet requirements
Issues in Bold

Pipe supports conform to specs.

By: _____ Date: 8/3/17

Distribution: [1] Contractor [1] Engineer [1] Owner

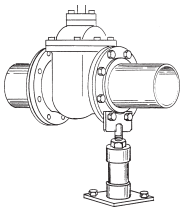

Material Resources, Inc.

STANDON ADJUSTABLE PIPE SUPPORTS

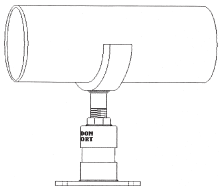

Standon Model S92 Saddle Support

The Standon Model S92 Saddle Support was specifically designed to fit your pipe! A nearly 50% circumferential cradle (170°), and a pipe-to-saddle gap clearance of less than .125" guarantees excellent performance.

The Standon Saddle Support comes with an oversized base and an adjustable collar allowing up to 3" of fine adjustment.

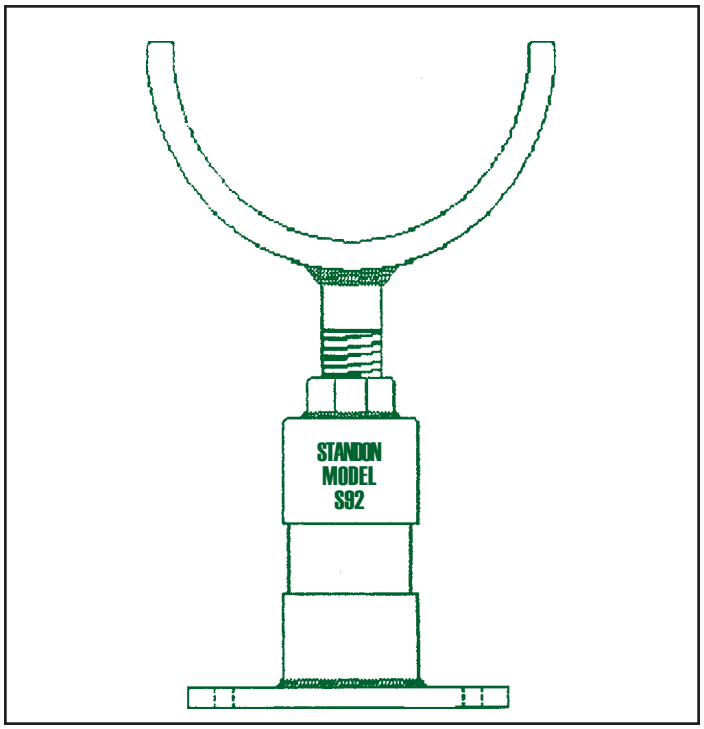

The Standon Saddle Support is offered in a variety of metals and sizes. Because corrosion is a concern, we offer a galvanized finish. Better yet - try our 100% 304 stainless steel version.

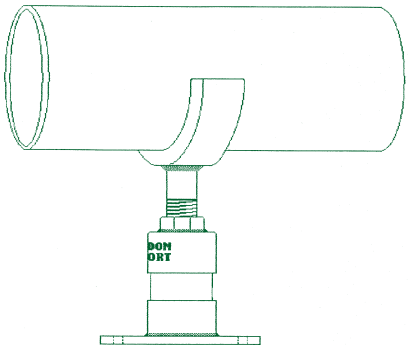

Packaged in an easily inventoried box, the Standon Saddle Support is always ready to do the job. An installation guide is included with each Support. The customer supplies the course extension pipe (size is determined by the size of the support being used). The extension pipe should be field cut to the length required. No threading is needed. The collar and base cups are sized to accept standard sizes of iron pipe. Schedule 40 is the minimum thickness recommended.

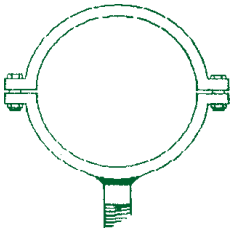

The Standon model C92 is a two piece, full circle saddle clamp. It comes supplied with two bolts and nuts to retain the matching top saddle.

"Quality you can Stand On"

"All Models Tested to 10,000 lbs. Compressive Strength"

For product availability and ordering information on these and other products offered by Material Resources Inc. please call:

(503) 533-5256 or **FAX (503) 533-5501**

or visit our website at

www.standon.net

MATERIAL RESOURCES, INC.

PO Box 247

Forest Grove, Oregon 97116

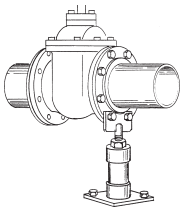

Material Resources, Inc.

STANDON ADJUSTABLE PIPE SUPPORTS

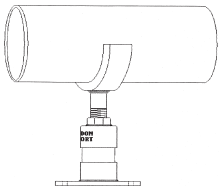

Standon Model S92 Saddle Support Product Specification Sheet

ALL MODELS TESTED TO OVER 10,000 POUNDS - COMPRESSIVE STRENGTH

MATERIAL -

Saddle strap:	ASTM A36
Collar / base cups:	ASTM A53 D.O.M. tubing
Thread stud:	ASTM A36, rolled thread, grade ASTM A307
Base plate:	ASTM A36 sheet steel

Optional Material - 100% 304L or 316L Stainless steel

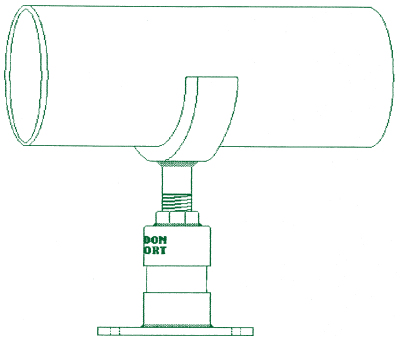

FABRICATION -

All welds:	100% MIG welding, electrode E70XX
Saddle:	Formed to ductile iron pipe radius
	Optional neoprene liner available for IPS pipe

FINISH - All supports have corrosion resistant, electro-galvanized finish.
Hot dip galvanizing available - specify at time of order

OPTION- A neoprene liner is available to isolate pipe from saddle.

DIMENSIONS - (Note: call manufacturer for 30" through 48" support info.)

SUPPORT SIZE	STRAP SIZE	THRD STUD	BASE PLATE	EXTENSION PIPE REQ.	MINIMUM DIST. TO FLOOR
2″	.375" x 2"	1" x 6"	4" x 6" x .25"	2" Sch. 40	7"
2.5″	.375" x 2"	1" x 6"	4" x 6" x .25"	2" Sch. 40	7"
3″	.375" x 2"	1" x 6"	4" x 6" x .25"	2" Sch. 40	7"
4″	.50" x 2"	1" x 6"	8" x 8" x .25"	2" Sch. 40	7"
6″	.50" x 2"	1" x 6"	8" x 8" x .25"	2" Sch. 40	7"
8″	.50" x 2"	1" x 6"	8" x 8" x .25"	2" Sch. 40	7"
10″	.50" x 2"	1" x 6"	8" x 8" x .25"	2" Sch. 40	7"
12″	.50" x 2"	1" x 6"	8" x 8" x .25"	2" Sch. 40	7"
14″	.625" x 3"	1.5" x 6"	8" x 8" x .5"	3" Sch. 40	9.5"
16″	.625" x 3"	1.5" x 6"	8" x 8" x .5"	3" Sch. 40	9.5"
18″	.75" x 4"	2" x 6"	8" x 8" x .5"	4" Sch. 40	10"
20″	.75" x 4"	2" x 6"	8" x 8" x .5"	4" Sch. 40	10"
24″	.75" x 4"	2" x 6"	8" x 8" x .5"	4" Sch. 40	10"

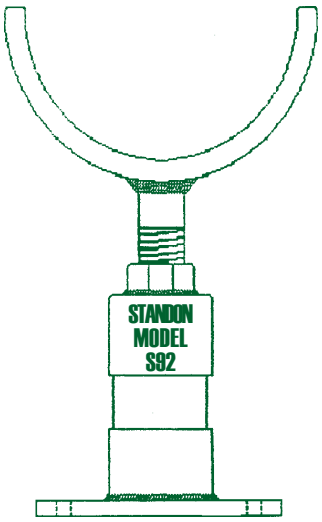

INSTALLATION -

To insure proper Support performance and stability; After final height adjustment is attained, apply tack welds to both support cups and extension pipe. Use E70XX electrode for welds. The base plate should be anchored to the floor with removable anchor bolts. If re-adjustment is required at a later date, remove anchor bolts and rotate entire lower unit using collar nut. Re-anchor base plate.

For product availability and ordering information on these and other products offered by Material Resources Inc please call:

(503) 533-5256 or (877)693-0727

FAX (503) 533-5501

WWW.STANDON.NET

MATERIAL RESOURCES, INC.

2800 Taylor Way Bldg. 2 C

PO Box 247

Forest Grove, OR 97116

DEPARTMENT OF THE ARMY
ALBUQUERQUE DISTRICT, CORPS OF ENGINEERS
ALBUQERQUE DISTRICT OFFICE
4101 JEFFERSON PLAZA NE
ALBUQUERQUE, NM 87109

SUBMITTAL REVIEW VERIFICATION SHEET

PROJECT TITLE: Kirtland BFF Mid-Plume Pump and Treat System Expansion
CONTRACT NUMBER: W912DR-12-D-0006 DM01
DATE RECEIVED: 8-16-2017
DATE REVIEWED: 8-16-2017

DESCRIPTION OF ITEMS REVIEWED:

1. Wall Sleeves and link seal.

NO EXCEPTIONS TAKEN.	**X**
EXCEPTIONS AS NOTED ON DRAWINGS AND/OR ATTACHED SHEETS(S). RESUBMISSION NOT REQUIRED.	
EXCEPTIONS AS NOTED ON DRAWINGS AND/OR ATTACHED SHEETS(S). RESUBMISSION REQUIRED.	
RECEIPT ACKKNOWLEDGED.	

Notes:

NOTE: ITEMS REVIEWED AS TO GENERAL LAYOUT ONLY. DIMENSIONS AND QUANTITIES NOT CHECKED. REVIEW DOES NOT RELIEVE CONTRACTOR OF RESPONSIBILITIES FOR ANY ERRORS WHICH MAY EXIST AS CONTRACTOR SHALL BE RESPONSIBLE FOR DIMENSIONS AND DESIGN OF ADEQUATE CORRECTIONS, DETAILS AND SATISFACTORY CONSTRUCTION OF WORK.

SIGNATURE SANCHEZ.AMY.ELIZABETH.1454434338 Digitally signed by SANCHEZ.AMY.ELIZABETH.1454434338 DN: c=US, o=U.S. Government, ou=DoD, ou=PKI, ou=USA, cn=SANCHEZ.AMY.ELIZABETH.1454434338 Date: 2017.08.16 15:18:10 -06'00' **DATE** 8/16/2017

EA Engineering, Science, and Technology, Inc., PBC

Submittal Review Sheet 1

Project Name: **Kirtland BFF Mid-Plume Pump and Treat System Expansion**			Date Received: **8/15/17**			
Project Owner: **Kirtland Air Force Base**			Checked By: **Tyler Curley**			
Contractor: **RMCI, Inc.**	Engineer: **EA Engineering, Science and Technology, Inc., PBC.**		Log Page: **NA**			
Address: **6211 Chappell Rd NE, Albuquerque, NM 87113**	Address: **320 Gold Ave. SW, Suite 1300 Albuquerque, NM 87102**		EA No.: 62599DM01			
			Spec. Section: **NA**			
			Drawing/Detail No.: **S-101**			
ATTN: Phillip Johnson	ATTN: **Devon Jercinovic**		1st Sub		Re-Sub	1
Date Transmitted: **08/15/2017**	Prev. Transmittal Date: **08/01/2017**					

Item No.	No. Copies	Description	Manufacturer	Mfg/Vendor Dwg or Detail	Action Taken*
1	1	Wall sleeves and link seal.	Link Seal		A

The Action Designated Above is in Accordance with the Following Legend:

A – Furnish as Submitted
B – Furnish as Noted
C – Revise and Re-submit
1. Not enough information for review.
2. No reproducible submitted.
3. Copies illegible.
4. Not enough copies submitted.
5. Wrong sequence number.
6. Wrong resubmittal number.
7. Wrong Spec. Section.
8. Wrong form used.
9. See Comments.

D – Rejected
E – Engineer's Review not Required
1. Submittal not required.
2. Supplemental Information. Submittal retained for Information purposes only.
3. Information reviewed and approved on prior submittal.
4. See Comments.

Review is for general compliance with Contract Documents. No responsibility is assumed for correctness of dimensions or detail. Contractor is required to specify deviations from contract requirements. Lack of exceptions noted by Engineer does not waive Contractor's obligation to comply with Drawings and Specifications.

Comments:
Items reviewed and confirmed to meet requirements
Issues in Bold

Link seal conforms to drawing S-101

By: _____ Date: 8/16/17

Distribution: [1] Contractor [1] Engineer [1] Owner

EXPERIENCE COUNTS

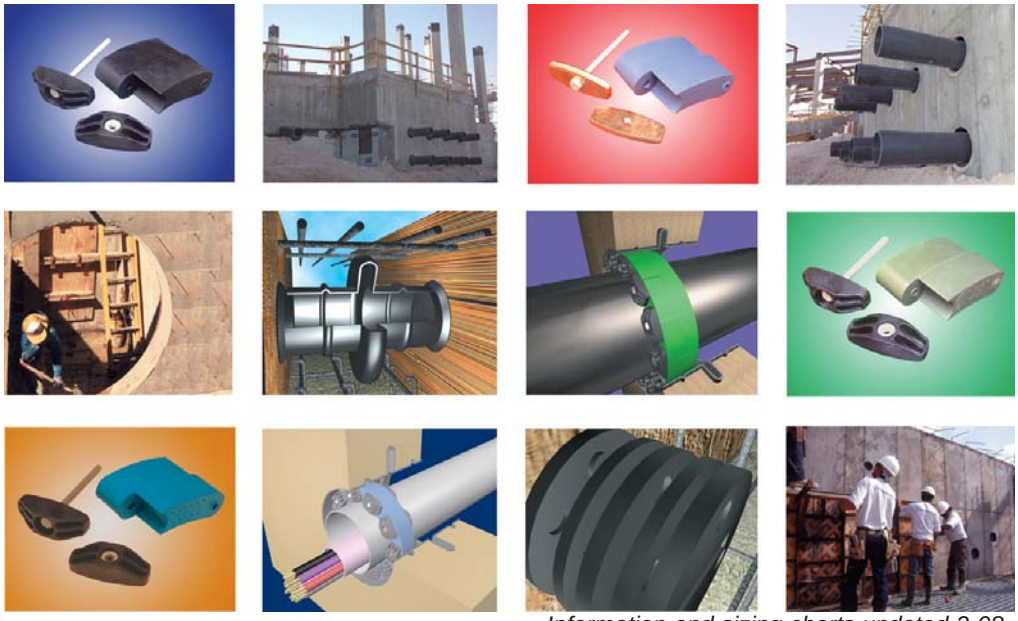

Information and sizing charts updated 2-08.

ENGINEERING MANUAL

Link-Seal® Modular Seals
Century-Line® Sleeves
Cell-Cast® Disks

APPROVED
THE INDUSTRY'S HEAVY DUTY PENETRATION SEAL

Use the original engineered fit...
there are no equals!

Made in U.S.A.

The system is the solution.

LinkSeal® Modular Seals...

The best way to permanently seal any cylindrical object, of any size, passing through any type of concrete barrier is to use Link-Seal® modular seals. From ductle iron to pre-stressed concrete to metal or plastic pipe, conduit or cables - whatever your application - Link-Seal® modular seals will effect a hydrostatic seal capable of holding 20 psig (40 feet of static head) between the pipe and the penetration cylinder through which the pipe passes.

in combination with Century-Line® sleeves...

The best way to guarantee a perfect seal is to use Century-Line® sleeves with Link-Seal® modular seals. They're engineered and sized to provide a stable hole that matches dimensionally with Link-Seal® modular seals. It makes ordering quick and easy and guarantees a perfect fit - and seal - each and every time.

or Cell-Cast® disks.

For larger holes in poured concrete structures, (29.25" to 64.75"Ø) Cell-Cast® disks are used to produce a dimensionally stable hole and smooth concrete surface that is perfect for use with Link-Seal® modular seals.

Tighten Your Specifications!

Approvals - - - - - - - -ISO 9001:2000, Factory Mutual
Elastomers - - - - - - - - - - - - - -EPDM, Nitrile, Silicone
Made in America (U.S.A) - - - - - - - - - - - - - - - - - -YES
Permanent Identification - - - - - - - - - - - - - - - - - -YES
Corrosion Resistant Fasteners
316 Stainless as Standard - - - - - - - - - - - - - -YES
16 Model Sizes -YES
Hi/Low Temp. Seals -YES
FM Approved Fire Seals - - - - - - - - - - - - - - - - - -YES
Bolts available in USA or Metric Format - - - - - - -YES
Bolts pass 1470 hour salt spray test - - - - - - - - - - -YES
Non-conductive CS Molded
Sleeve Penetration System - - - - - - - - - - - - - - - -YES
Low torque Pressure Plate and Elastomer - - - - -YES
Special "V" Modification - - - - - - - - - - - - - - - - - - -YES
Color Coded elastomers - - - - - - - - - - - - - - - - - - -YES
Cell-Cast® Hole Forms - - - - - - - - - - - - - - - - - - -YES
On Staff Seal Engineering Assistance - - - - - - - - -YES
Worldwide Stocking Distributors - - - - - - - - - - - - -YES
Bolt and nut specifications per ASTM standards---YES

(See Link-Seal® Modular Seal specification,section 2.2, on page 26)

Link-Seal® Modular Seal

The following is a partial listing of the many Federal agencies, associations, code groups, laboratories and organizations which have approved, listed, specified, tested or otherwise indicated acceptance of Link-Seal® modular seals.

General Code Groups, Associations, Laboratories and Approval Authorities

AWWA - American Water Works Association
API - American Petroleum Institute
TUV - Technischer Überwachungs-Verein
Bureau Veritas - Marine Division
ASME - American Society of Mechanical Engineers
DNV - Det Norske Veritas
FM - Factory Mutual Engineering Corporation
LLOYD'S - Lloyd's Register of Shipping
NACE - National Association of Corrosion Engineers

Governmental Agencies

Bureau of Public Roads - Division of Bridges
United States Coast Guard
Corps. of Engineers
GSA - General Services Administration
Military Specifications
TVA - Tennessee Valley Authority

Link-Seal® Modular Seal Features

Saves time and money...
Link-Seal® modular seals install in up to 75% less time when compared to lead-oakum joints, hand fitted flashings, mastics or casing boots.

Positive hydrostatic seal...
Link-Seal® modular seals are rated at 20 psig (40 feet of head), which exceeds the performance requirements of most applications.

Long seal life...
Link-Seal® modular seals are designed for use as a permanent seal. Seal elements are specially compounded to resist aging and attack from ozone, sunlight, water and a wide range of chemicals.

Maximum protection against corrosion...
Standard fasteners employ the use of a proprietary coating process on carbon steel. For extremely corrosive environments, corrosion resistant 316 stainless steel hardware is offered as a standard.

ISO Quality Assurance...
Link-Seal® modular seals are manufactured in an ISO 9001:2000 certified facility. In addition, they are completely manufactured and assembled in the U.S.A.

Certification/Approvals...
Factory Mutual Fire Approvals.
Det Norske Veritas Marine Deak/Bulkhead Penetration Certification.
Also a wide variety of approvals from various Federal agencies, associations, code groups, laboratories and organizations.

Configure a Link-Seal® modular seal to match your application...
Color coded EPDM, Nitrile, & Silicone elastomers may be used with various hardware options to match performance characteristics with service conditions.

Choose a Link-Seal® modular seal to match your pipe size and wall opening...
Link-Seal® modular seals are now available in 16 sizes to provide a solution for varying pipe penetration applications.

Link-Seal® Modular Seal Applications

- Mechanical Contractors - Interior Piping Systems
- Floor Sleeves
- Wall Sleeves
- Manhole Pipe Entry Seals
- Waste Treatment Plants
- Cased Road Crossings
- Elevator Shafts
- Thermal Storage Systems
- Fire Protection Wall Penetrations
- Cased Railroad Crossings
- Electrical Isolation of Pipes
- Precast Concrete Vault Seals
- Insulated Pipe Seals
- Dual Containment Seals
- Marine Applications
- Noise Dampening
- Flexible Sign & Pole Supports
- Electrical Isolation of Pipe Supports
- Mining
- Pulp & Paper
- Decorative Fountains
- Bank Tube Transfer Systems
- Pool Contractors
- Electrical Contractors
- Marine Applications
- Waste & Water Treatment
- Telecommunications
- Valve Pits
- Refrigeration Buildings
- Overhead Signs
- Guard Post Assemblies
- Power Generation Dams
- Offshore Oil Rigs
- High Pressure Tank Guards
- Underground Steel Tanks
- Precast Concrete Manufacturers
- Perimeter Berm Installations Around Tank Farms
- Flow Restrictors in Sewer Maintenance
- Fluid Overflow Devices
- Noise and Sway Dampener
- Through Deck Fire Breaks
- Parking Garage Column Protectors
- Cable TV Installations
- Bridge Construction
- Septic Tank Installations
- Coal Preparation Plants
- Flag Pole Installations
- Tunneling Operations

Link-Seal® Modular Seal Model Properties

with EPDM Seal Elements

EPDM (Black)
EPDM (Blue) Low Durometer

Model "C" or "L" Link-Seal Modular Seal

Suitable for use in water, direct ground burial and atmospheric conditions. Provides electrical isolation where cathodic protection is required.
Type: Standard
Seal Element: EPDM (Black) or EPDM (Blue)
Pressure Plates: Reinforced Nylon Polymer
Bolts & Nuts: Steel with 2-part Zinc Dichromate & proprietary corrosion inhibiting coating.
Temp. Range: -40 to +250ºF (-40 to +121ºC)*

Model "S-316" Link-Seal Modular Seal

For chemical processing & waste water treatment. EPDM rubber is resistant to most inorganic acids and alkalis, some organic chemicals (acetone, alcohol, ketones).
Type: Stainless
Seal Element: EPDM (Black) or EPDM (Blue)
Pressure Plates: Reinforced Nylon Polymer
Bolts & Nuts: 316 Stainless Steel
Temp. Range: -40 to +250ºF (-40 to +121ºC)*

* = Sustained operation near temperature limits may affect life expectancy.

with Nitrile Seal Elements

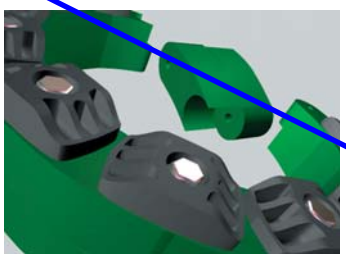

Nitrile (Green)

Model "O" Link-Seal Modular Seal

Nitrile rubber is resistant to oils, fuel and many solvents (gasoline, motor oil, kerosene, methane, jet fuel, hydraulic fluid, water, etc.).
Type: Oil Resistant
Seal Element: Nitrile (Green) Note: Not U.V resistant.
Pressure Plates: Reinforced Nylon Polymer
Bolts & Nuts: Steel with 2-part Zinc Dichromate & proprietary corrosion inhibiting coating.
Temp. Range: -40 to +210ºF (-40 to +99ºC)*

Model "OS-316" Link-Seal Modular Seal

Combination of oil resistant rubber and stainless steel hardware.
Type: Oil Resistant
Seal Element: Nitrile (Green) Note: Not U.V resistant.
Pressure Plates: Reinforced Nylon Polymer
Bolts & Nuts: 316 Stainless Steel
Temp. Range: -40 to +210 ºF (-40 to +99ºC)*

* = Sustained operation near temperature limits may affect life expectancy.

with Silicone Seal Elements

Silicone (Grey)

Model "T" Link-Seal Modular Seal

Silicone rubber is ideal for temperature extremes. The "T" model is one-hour Factory Mutual approved.
Type: High/Low Temperature
Seal Element: Silicone (Grey)
Pressure Plates: Steel Zinc Dichromate
Bolts: Steel with 2-part Zinc Dichromate & proprietary corrosion inhibiting coating.
Temp. Range: -67 to +400ºF (-55 to +204ºC)*

Model "FD/FS" Link-Seal Modular Seal

Double seal for added protection.
Type: Fire Seals
Seal Element: Silicone (Grey)
Pressure Plates: Steel zinc dichromate
Bolts: Steel with 2-part Zinc Dichromate proprietary corrosion inhibiting coating.
Temp. Range: -67 to +400ºF (-55 to +204ºC)*

NOTE: Sustains a constant temp. of 325ºF (163º C.)
* = Sustained operation near temperature limits may affect life expectancy.

Material Properties of Link-Seal Modular Seal Elements

PROPERTY	ASTM METHOD	EPDM (EPDM L)	NITRILE	SILICONE
Hardness (shore A)	D-2240	50 ±5 (40 ±5)	50 ±5	50 ±5
Tensile	D-412	1450 psi	1300 psi	860 psi
Elongation	D-412	400%	300%	250%
Compression Set	S-395	15% 22 hrs. @ 158ºF (70ºC)	45% 22 hrs. @ 212ºF (100ºC)	40% 22 hrs. @ 350ºF (177ºC)
Specific Gravity	D-297	1.10	1.15	1.40

Material Properties of Composite Pressure Plates

PROPERTY	ASTM METHOD	VALUE
Izod Impact - Notched	D-256	2.05 ft-lb/in
Tensile Strength @ Yield	D-638	20,000 psi
Tensile Strength - Break	D-638	20,250 psi
Flexural Strength @ Yield	D-790	30,750 psi
Flexural Modulus	D-790	1,124,000 psi
Elongation, Break	D-638	11.07%
Specific Gravity	D-792	1.38
Moisture Content	--	0.18%

Bolt & Nut Specifications

Standard: Carbon Steel
Carbon steel, zinc dichromated per ASTM B633, with an additional corrosion inhibiting proprietary organic coating. (passes 1470 hour salt spray test)
Tensile Strength = 60,000 psi, minimum.

Option: Stainless Steel
ANSI Type = 316, Per ASTM F593-95
Tensile Strength = 85,000 psi, average.

Dimensional Data

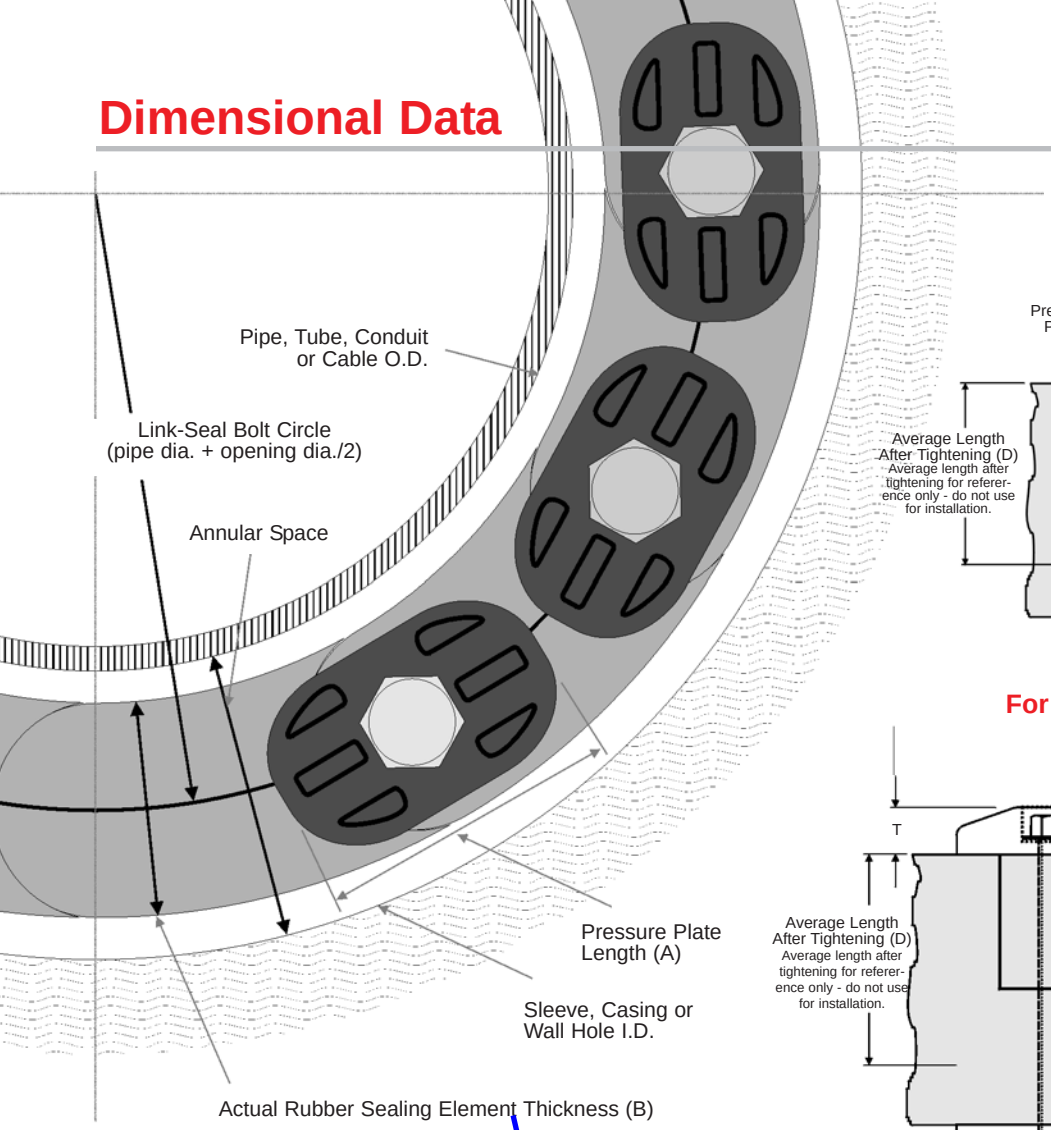

For LS-200 through LS-315

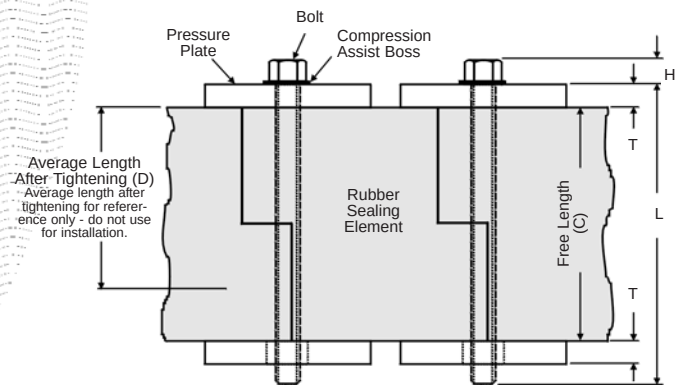

For LS-325 through LS-600

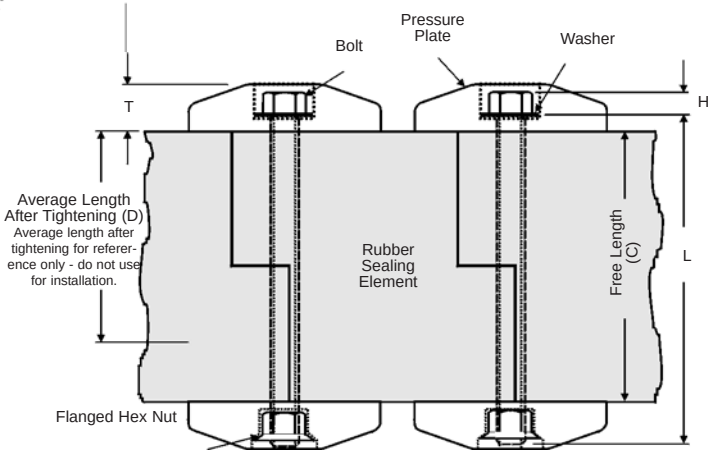

Dimensional Data for Models C, L, O, S-316 and OS-316 (Dimensions in inches except as noted)

LINK-SEAL MODEL NO.	RUBBER SEALING ELEMENT			PRESSURE PLATE		BOLT				WEIGHT FOR 10 LINK SECTION (LBS)	MIN. REQUIRED SEATING WIDTH
	ACTUAL THICKNESS (B)	FREE LENGTH (C)	AVG. LENGTH AFTER TIGHTENING (D)	(A)	(T)	HEX ACROSS FLATS	(H)	THREAD SIZE	(L)		
LS-200-C	0.48	1.75	1.38	1.06	0.31	M5 (slotted hex)	0.18	M5	2.50	0.75	2.25
LS-275-C	0.61	1.75	1.38	0.90	0.31	M5 (slotted hex)	0.18	M5	2.50	0.85	2.25
LS-300-C	0.69	2.37	1.87	1.50	0.44	0.50	0.22	5/16-18	3.50	2.10	3.00
LS-315-C	0.81	2.37	1.87	1.44	0.44	0.50	0.22	5/16-18	3.50	3.00	3.00
LS-325-C	0.88	2.63	2.00	3.13	1.00	0.50	0.22	5/16-18	4.50	5.50	4.00
LS-340-C	1.00	2.70	2.25	1.52	0.67	0.50	0.22	5/16-18	4.50	3.40	4.00
LS-360-C	1.24	2.70	2.25	2.05	0.77	0.50	0.22	5/16-18	4.50	5.00	4.00
LS-400-C	1.38	3.50	2.75	3.50	1.06	0.56	0.25	3/8-16	5.00	12.00	5.00
LS-410-C	1.43	3.37	2.87	2.52	0.88	0.56	0.25	3/8-16	5.00	8.20	5.00
LS-425-C	1.06	3.00	2.25	3.50	1.19	0.56	0.25	3/8-16	5.00	10.00	5.00
LS-475-C	1.56	3.38	2.63	2.63	0.88	0.56	0.25	3/8-16	5.00	10.00	5.00
LS-500-C	2.25	3.75	2.75	3.63	1.06	0.75	0.34	1/2-13	5.50	22.50	5.00
LS-525-C	2.06	3.75	2.87	3.63	1.06	0.75	0.34	1/2-13	5.50	21.00	5.00
LS-575-C	1.81	3.75	3.00	3.00	1.00	0.75	0.34	1/2-13	5.50	15.50	5.00
LS-600-C	3.09	4.00	3.00	6.00	1.90	1.16	.50	M20X2.5	7.10	60.60	6.00
LS-650-C	2.71	3.98	3.00	3.96	1.19	.75	.31	M12X1.75	6.88	26.10	6.00

Installation Techniques - Link-Seal® Modular Seals

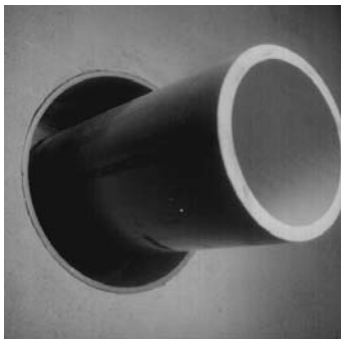

1. Center the pipe, cable or conduit in wall opening or casing. Make sure the pipe will be adequately supported on both ends. Link-Seal® modular seals are not intended to support the weight of the pipe.

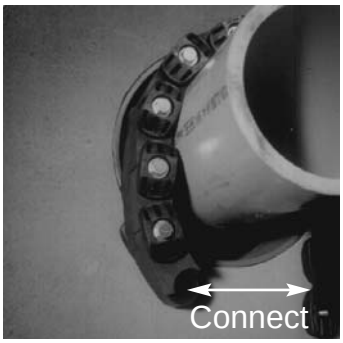

2. Loosen rear pressure plate with nut just enough so links move freely. Connect both ends of belt around the pipe.

3. Check to be sure all bolt heads are facing the installer. Extra slack or sag is normal. Do not remove links if extra slack exists. **Note:** On smaller diameter pipe, links may need to be stretched.

4. Slide belt assembly into annular space. For larger size belts, start inserting Link-Seal modular seal assembly at the 6 O'Clock position and work both sides up toward the 12 O'Clock position in the annular space.

5. Using a hand socket or offset wrench ONLY, start at 12 O' Clock. Do not tighten any bolt more than 4 turns at a time. Continue in a clockwise manner until links have been uniformly compressed. (Approx. 2 or 3 rotations)

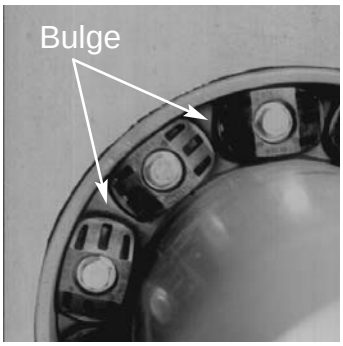

6. Make 2 or 3 more passes at 4 turns per bolt MAXIMUM, tightening all bolts clockwise until all sealing elements **"bulge"** around all pressure plates. On type 316 stainless steel bolts, hand tighten ONLY without power tool.

7. If the seal doesn't appear to be correct using the instructions provided, **Call PSI at 800-423-2410.**

Installation Notes: The Link-Seal® modular seal bolt heads are usually recessed below the wall opening or the edge of casing pipe and therefore a socket or offset wrench must be used.
Hand Tools: Use 5/16" hex or #6 screwdriver for LS-200. 1/2" hex requires 3/8" drive socket wrench. 9/16" and 3/4" hex requires 1/2" drive socket wrench. (Tools not provided.)

Always Wear Safety Equipment When Installing Link-Seal® modular seals!

Always Wear Safety Equipment When Using Link-Seal® Modular Seals!

Link-Seal® Modular Seal - Do's

1. Make sure pipe is centered.
2. Install the belt with the pressure plates evenly spaced.
3. Install the exact number of links indicated in sizing charts.
4. Check to make sure pipe is supported properly during backfill operations. Note: Link-Seal modular seals are not intended to support the weight of the pipe.
5. Make sure seal assembly and pipe surfaces are free from dirt.
6. For tight fits, use non-polluting liquid detergent to assist installation.

Link-Seal® Modular Seal - Don'ts

1. Don't Install the belt with the pressure plates aimed in irregular directions. (Staggered)
2. Don't Install Link-Seal® modular seals where weld-beads or other irregular surfaces exist without consideration of the sealing requirements.
3. Don't torque each bolt completely before moving on to the next.
4. Don't use high speed power tools (450 rpm or more)
5. Do not use power tools on Link-Seal modular seal 316 stainless steel bolts.
6. Don't use grease installing Link-Seal modular seals.

If the seal doesn't appear to be correct using the techniques provided, **Call PSI at 713-747-6948 or 800-423-2410.**

Typical Specification

1.0 General

Under this section there shall be furnished and installed a complete Link-Seal® modular seal assembly, manufactured by PSI-Thunderline/Link-Seal® located at 6525 Goforth Street, Houston, TX 77021, as shown on drawings and specifications. For clarification, complete assembly is defined as a combined:

A. Wall opening (i.e. steel sleeve, Thermoplastic (HDPE) sleeve, cored hole or formed hole). The wall opening size and/or type shall be selected according to information found in the most recent Link-Seal® modular seal catalog.

B. Sufficient quantity and type of Link-Seal® modular seals required to effectively provide a hydrostatic and/or fire-rated seal.

C. Each individual link shall be conspicuously and permanently identified with the name of the manufacturer and model number. Manufacturers other than the above-named company wishing to quote equipment in this section shall submit detail drawings of their proposed equipment and suitable evidence of a minimum of 25 years of experience and results to the engineer to obtain written approval to quote at least ten (10) days prior to bid opening.

2.0 Link-Seal® Modular Seal Rubber Links

Shall be modular, mechanical type, consisting of inter-locking synthetic rubber links shaped to continuously fill the annular space between the pipe and the wall opening. The elastomeric element shall be sized and selected per manufacturer's sizing procedure and have the following properties as designated by ASTM. Coloration shall be throughout elastomer for positive field inspection. Each link shall have a permanent identification of the size and manufacturer's name molded into it.

A. For Standard Service Applications = Model C
-40 to +250ºF (-40 to +121ºC)
EPDM = ATSM D2000 M3 BA510
Color = Black

B. For Thin Walled Pipe Applications = Model L
-40 to +250ºF (-40 to +121ºC)
EPDM = ATSM D2000 M3 BA510
Color = Blue

C. For Hydrocarbon Service Applications = Model O
-40 to +210ºF (-40 to +99ºC)
Nitrile = ASTM D2000 M1BF510
Color = Green

D. For High Temperature or Fire Seal Applications = Model T
-67 to +400ºF (-55 to +204ºC)
Silicone = ASTM D2000 M1GE505
Color = Gray
Reference shall always be made to the latest published Link-Seal® modular seal selection guide for the service intended.

2.1 Link-Seal® Modular Seal Pressure Plates

A. Link-Seal® modular seal pressure plates shall be molded of glass reinforced Nylon Polymer with the following properties:

Izod Impact - Notched =	2.05ft-lb/in. per ASTM D-256
Flexural Strength @ Yield =	30,750 psi per ASTM D-790
Flexural Modulus =	1,124,000 psi per ASTM D-790
Elongation Break =	11.07% per ASTM D-638
Specific Gravity =	1.38 per ASTM D-792

B. Models LS200-275-300-315 shall incorporate the most current Link-Seal® Modular Seal design modifications and shall include an integrally molded compression assist boss on the top (bolt entry side) of the pressure plate, which permits increased compressive loading of the rubber sealing element. Models 315-325-340-360-400-410-425-475-500-525-575-600 shall incorporate an integral recess known as a "Hex Nut Interlock" designed to accommodate commercially available fasteners to insure proper thread engagement for the class and service of metal hardware. All pressure plates shall have a permanent identification of the manufacturer's name molded into it.

C. For fire and Hi-Temp service, pressure plates shall be steel with 2-part Zinc Dichromate Coating.

2.2 Link-Seal® Modular Seal Hardware

All fasteners shall be sized according to latest Link-Seal® modular seal technical data. Bolts, flange hex nuts shall be either:

A. Mild Steel with a 60,000 psi minimum tensile strength and 2-part Zinc Dichromate coating per ASTM B-633 and Organic Coating, tested in accordance with ASTM B-117 to pass a 1,470 hour salt spray test.

B. 316 Stainless Steel per ASTM F593-95, with a 85,000 psi average tensile strength.

3.0 Wall Opening

A. Century-Line® Sleeves - for openings to 24.81" diameter.
Where pipes must pass through walls and floors of new structures, unless otherwise shown or specified, install molded non-metallic high density polyethylene Model CS Century-Line® sleeves as manufactured by PSI-Thunderline/Link-Seal®. Model CS sleeves shall have integrally formed hollow water stop sized having a minimum of four inches larger than the outside diameter of the sleeve itself and allowing 1/2" movement between wall forms to resist pour forces. Each sleeve assembly shall have end caps manufactured of the same material as the sleeve itself and installed at each end of the sleeve so as to prevent deformation during the initial concrete pour, and to facilitate attaching the sleeve to the wall forms. End caps shall remain in place to protect the opening from residual debris and rodent entry prior to pipe insertion.

B. Cell-Cast® Disks - for openings from 29.25" to 64.74" diameter.
The contractor shall install Cell-Cast® disks, providing a round hole in conformance with Link-Seal® modular seal sizing data. Cell-Cast® disks shall consist of 3" and/or 4" lightweight interlocking polyethylene cells stacked to form the thickness of the poured concrete wall. Molded into each cell shall be a cavity to accept a 2" x 4" nailer.

4.0 Quality Assurance

Link-Seal® Modular Seal components and systems shall be domestically manufactured at a plant with a current ISO-9001:2000 registration. Copy of ISO-9001:2000 registrations shall be a submittal item.

NOTE: Link-Seal Modular Seals are specifically designed as hydrostatic and/or fire rated seals and are not considered to be pipe supports. When appropriate, Link-Seal Modular Seals should be used with proper pipe supports on both ends.

Frequently Asked Questions

1) Q - Can Link-Seal® modular seals be used with pipe types not listed in the standard published charts?
A - Yes, The best way to permanently seal any cylindrical object, of any size, passing through any type of concrete barrier is to use Link-Seal® modular seals. From ductle iron to pre-stressed concrete to metal or plastic pipe, conduit or cables - whatever your application - Link-Seal® modular seals will effect a hydrostatic seal capable of holding 20 psig (40 feet of static head) between the pipe and the penetration cylinder through which the pipe passes.

2) Q - How much angular pipe movement will Link-Seal® modular seals allow and still maintain a seal?
A - Link-Seal® modular seals may allow angular pipe movement or misalignment depending on the ratio of annular space of the penetration to the expanded range of the Link-Seal® model sized for the penetration. Please call PSI for more information.

3) Q - When is the recommended time to install Link-Seal® modular seals?
A - Always install Link-Seal® modular seals prior to any final connections. This helps prevent off-center pipe alignment.

4) Q - Is it necessary to use WS or CS sleeves when installing Link-Seal® modular seals?
A - WS model steel and CS model HDPE sleeves are specially designed for use with Link-Seal® modular seals. When installed with Link-Seal® modular seals these sleeves provide the best possible assurance of a quality wall penetration system.

5) Q - What tools are required to install Link-Seal® modular seals?
A - A socket or offset wrench with 5/16”, 1/2”, 3/8”, 9/16”, 3/4” & 1-3/16” sockets will handle all installations. A low speed (450 RPM or less) power tool is suggested for multiple installations to increase efficiency.

6) Q - Can I use power tools when installing Link-Seal modular seals with 316 stainless steel bolts?
A - No, please refer to suggested installation techniques.

7) Q - Sometimes when installing a Link-Seal® modular seal belt, it hangs loose on the pipe even though all my sizing calculations are correct. Why does it appear that I have too many links?
A - Link-Seal® modular seals are basically sized to fit the annular space, not the pipe. Use the assemblies suggested by the charts or calculation. It may not look right, but it will fit.

8) Q - Can Link-Seal® modular seals be used for penetrations where the pipe is off-center to the opening?
A - Centering is very important. Contact PSI for more information.

9) Q - How do I install Link-Seal® modular seals over a weld-bead?
A - Weld-beads and all other irregularities on the pipe or opening should be addressed in accordance with the manufacturer’s and/or project engineer’s suggestions to provide a round, smooth and clean surface for Link-Seal® installation.

10) Q - My wall is 24” thick. Do I need Link-Seal® modular seals on both sides of the wall?
A - In many cases, one single Link-Seal® modular seal assembly is appropriate. Double seals are typically found in critical applications such as fire walls or nuclear power stations. Double seals are also suggested for building foundation wall penetrations where the wall thickness is greater than 12”.

11) Q- Can Link-Seal modular seals be used with manhole vault installed thimbles, not sleeves?
A- No, only if the area creates a penetration cylinder, such that the axis of the cylinder is parrallel to the axis of the pipe going through it.

12) Q- Can lubricant be used to install Link-Seal® modular seals?
A- Yes, any non-polluting liquid detergent is preferred over a grease. If you need to use grease or another lubricant, please contact PSI.

13) Should you grout over Link-Seal® modular seals?
A- Link-Seal modular seals do not require any assistance to create a water tight seal, if they are installed per our published installation techniques. Any material placed between the seal and the ID of the penetration is not recommended. However, if grout is needed for appearance purposes only, it’s suggested that the links be installed far enough into the penetration to accommodate a layer of “bubble wrap”. If the pipe needs future maintenance the grout can be removed and access can be gained to the bolts of the Link-Seal modular seal.

14) What model Link-Seal® modular seals should be used for submerged sea water applications?
A- For submerged sea water applications use Model S-316 Link-Seal modular seals. See page 5 for material property information.

15) Why is it sometimes difficult to seal an insulated pipe with Link-Seal® modular seals?
A- Jacket thickness, or more importantly, its ability to maintain its diameter without deforming is key to success of the Link-Seal modular seal’s ability to seal. If the jacket withstands the constricting force of the Link-Seal modular seal without cracking or deforming, Link-Seal modular seals are effective. If the jacket “gives”, much like an aluminum can, the jacket will crack enabling water to go directly into the insulation and by pass the Link-Seal modular seal installation.

16) Q - Is it necessary to use riser clamps, pipe saddles and hanger supports with Link-Seal® modular seals?
A - Link-Seal® modular seals are penetration type seals. It is not intended to be a structural support. Standard pipe hanger practice should always be applied.

Updated engineering catalogs, literature, CAD Drawings, submittals and installation techniques are available on-line at: www.linkseal.com

DEPARTMENT OF THE ARMY
ALBUQUERQUE DISTRICT, CORPS OF ENGINEERS
ALBUQERQUE DISTRICT OFFICE
4101 JEFFERSON PLAZA NE
ALBUQUERQUE, NM 87109

SUBMITTAL REVIEW VERIFICATION SHEET

PROJECT TITLE: Kirtland BFF Mid-Plume Pump and Treat System Expansion
CONTRACT NUMBER: W912DR-12-D-0006 DM01
DATE RECEIVED: 08-04-2017
DATE REVIEWED: 08-07-2017

DESCRIPTION OF ITEMS REVIEWED:

1. 40 05 13-008 Leak Detection System

NO EXCEPTIONS TAKEN.	**X**
EXCEPTIONS AS NOTED ON DRAWINGS AND/OR ATTACHED SHEETS(S). RESUBMISSION NOT REQUIRED.	
EXCEPTIONS AS NOTED ON DRAWINGS AND/OR ATTACHED SHEETS(S). RESUBMISSION REQUIRED.	
RECEIPT ACKKNOWLEDGED.	

Notes:

NOTE: ITEMS REVIEWED AS TO GENERAL LAYOUT ONLY. DIMENSIONS AND QUANTITIES NOT CHECKED. REVIEW DOES NOT RELIEVE CONTRACTOR OF RESPONSIBILITIES FOR ANY ERRORS WHICH MAY EXIST AS CONTRACTOR SHALL BE RESPONSIBLE FOR DIMENSIONS AND DESIGN OF ADEQUATE CORRECTIONS, DETAILS AND SATISFACTORY CONSTRUCTION OF WORK.

SIGNATURE SANCHEZ.AMY.ELIZABETH.1454434338 Digitally signed by SANCHEZ.AMY.ELIZABETH.1454434338 DN: c=US, o=U.S. Government, ou=DoD, ou=PKI, ou=USA, cn=SANCHEZ.AMY.ELIZABETH.1454434338 Date: 2017.08.07 10:16:26 -06'00' **DATE** 8/7/2017

EA Engineering, Science, and Technology, Inc., PBC

Submittal Review Sheet 1

Project Name: **Kirtland BFF Mid-Plume Pump and Treat System Expansion**				Date Received: **8/1/17**	
Project Owner: **Kirtland Air Force Base**				Checked By: **Tyler Curley**	
Contractor: **RMCI, Inc.**	Engineer: **EA Engineering, Science and Technology, Inc., PBC.**			Log Page: **NA**	
Address: **6211 Chappell Rd NE, Albuquerque, NM 87113**	Address: **320 Gold Ave. SW, Suite 1300 Albuquerque, NM 87102**			EA No.: 62599DM01	
				Spec. Section: **2.4.4.5**	
				Drawing/Detail No.:	
ATTN: Phillip Johnson	ATTN: **Devon Jercinovic**			1st Sub	Re-Sub
Date Transmitted: **08/01/2017**	Prev. Transmittal Date:				

Item No.	No. Copies	Description	Manufacturer	Mfg/Vendor Dwg or Detail	Action Taken*
1	1	Leak Detection	PermAlert		A

The Action Designated Above is in Accordance with the Following Legend:

A – Furnish as Submitted
B – Furnish as Noted
C – Revise and Re-submit
1. Not enough information for review.
2. No reproducible submitted.
3. Copies illegible.
4. Not enough copies submitted.
5. Wrong sequence number.
6. Wrong resubmittal number.
7. Wrong Spec. Section.
8. Wrong form used.
9. See Comments.

D – Rejected
E – Engineer's Review not Required
1. Submittal not required.
2. Supplemental Information. Submittal retained for Information purposes only.
3. Information reviewed and approved on prior submittal.
4. See Comments.

Review is for general compliance with Contract Documents. No responsibility is assumed for correctness of dimensions or detail. Contractor is required to specify deviations from contract requirements. Lack of exceptions noted by Engineer does not waive Contractor's obligation to comply with Drawings and Specifications.

Comments:
Items reviewed and confirmed to meet requirements
Issues in Bold

Leak detection consists on suitable material and will allow pin-pointing of any leaks should they occur. Consists of a continuous sensing cable instead of individual probes.

By: _____ Date: 8/4/17

Distribution: [1] Contractor [1] Engineer [1] Owner

Yellow highlighted spot indicates approximate location of access tees.

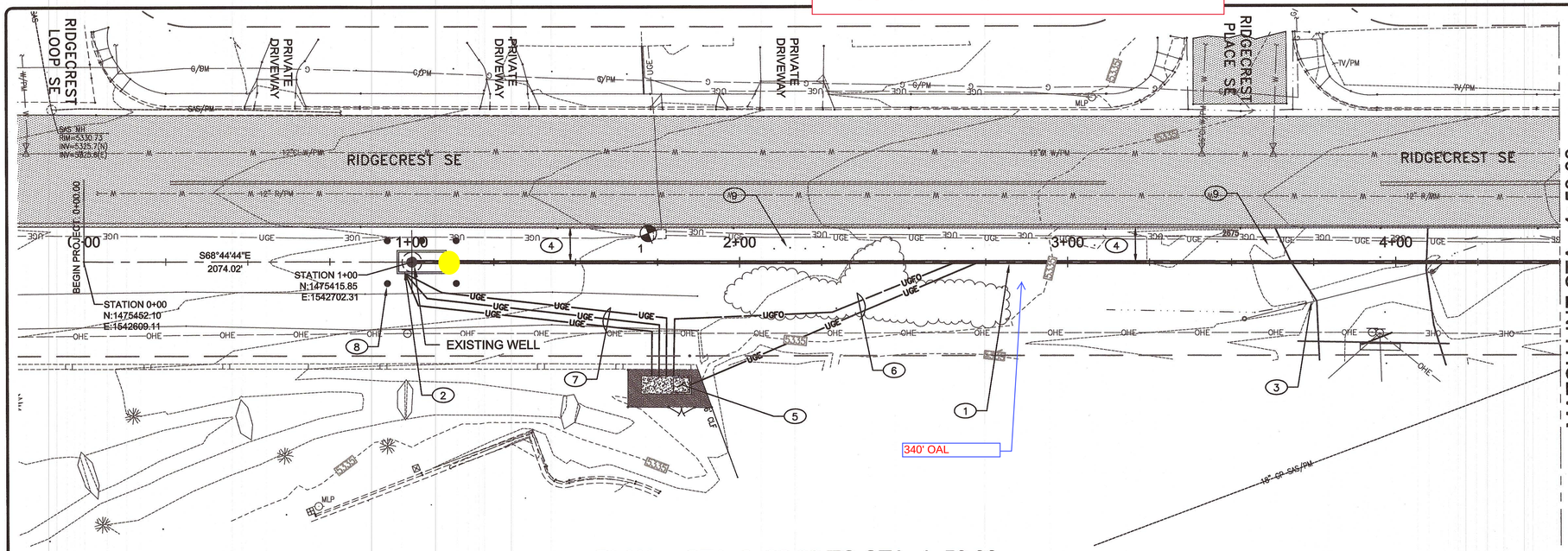

PLAN - STA: 0+00.00 TO STA: 4+50.00

SCALE: 1" = 20'

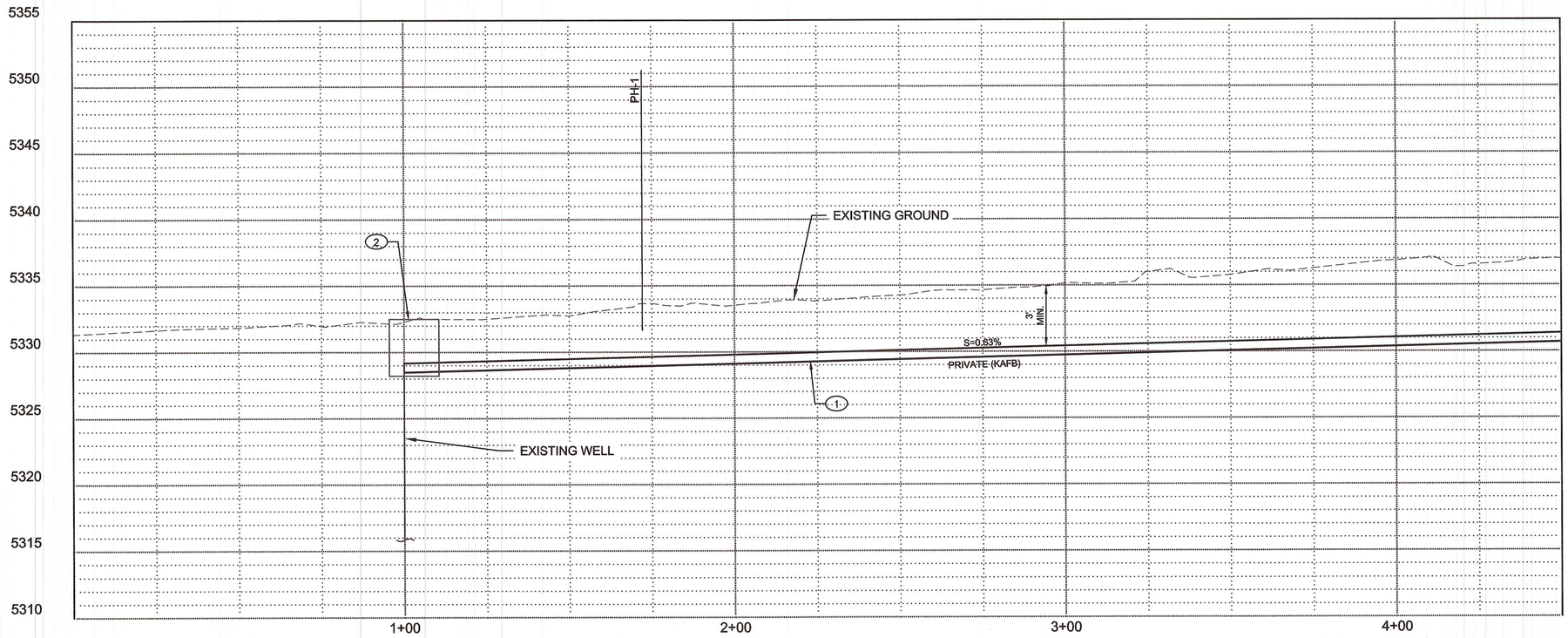

PROFILE - STA: 0+00.00 TO STA: 4+50.00

GENERAL NOTES:

1. MAINTAIN A MINIMUM OF 3 FEET OF SOIL COVER OVER INSTALLED 4"x8" DOUBLE WALL PIPE.
2. PROVIDE A MINIMUM OF 18" OF VERTICAL SEPARATION WHEN CROSSING OVER OR UNDER EXISTING UTILITIES.

KEYED NOTES:

1. NEW PRIVATE 4"x8" HDPE PIPELINE. SEE C-301, DETAIL 2 FOR TYP. TRENCH SECTION
2. NEW REINFORCED PRECAST CONCRETE WELL VAULT W/ - 5 GUARD POSTS. SEE C-302 DETAIL 1 FOR VAULT DETAIL.
3. REMOVE AND SALVAGE EXIST. CULVERT PIPE. RESET TO EXISTING ELEVATION AFTER PIPELINE IS INSTALLED AND BACKFILLED.
4. INSTALL PIPELINE 10' OFF EXISTING EDGE OF PAVEMENT UNLESS OTHERWISE NOTED.
5. ELECTRICAL EQUIPMENT YARD. SEE C-401 FOR ENLARGED PLAN.
6. SEE C-301, DETAIL 5 FOR TRENCH SECTION.
7. SEE E-501, DETAIL 2 FOR TRENCH SECTION.
8. GUARD POST (TYP. OF 5) SEE C-301, DETAIL 4.
9. RESTORE EXISTING SWALE AFTER PIPELINE INSTALLATION IS COMPLETE. SEED SWALE AND ALL GROUND DISTURBED BY CONSTRUCTION WITH COA STANDARD SPEC. (1012) NATIVE GRASS SEED MIX AND PROCEDURES.

HORIZONTAL
SCALE: 1" = 20'
VERTICAL
SCALE: 1" = 5'

20' 0 20' 40' 60' HORIZ.
5' 0 5' 10' 15' VERT.

POTHOLE TABLE

NO.	DESCRIPTION	DEPTH
1	2" DIA. ELEC.	25"

COA PROJECT NO: 586082

Design Review Committee	City Engineer Approval	Last Design Update	No. / Day / Yr.	No. / Day / Yr.

GEORGE NEMETH NEW MEXICO 12284 REGISTERED PROFESSIONAL ENGINEER
5-3-17

NO.	REVISION DESCRIPTION	DATE	BY
5			
4			
3			
2			
1			

Name
Location

KIRTLAND AIR FORCE BASE
BULK FUELS FACILITY
KAFB - 106239 CONVEYANCE LINE
CONVEYANCE LINE INSTALLATION
STA: 0+00 TO STA: 4+50

SMITH ENGINEERING COMPANY
2201 SAN PEDRO NE BLDG 4, SUITE 200
ALBUQUERQUE, NM 87110

JOB NO: 116112
DATE: MAY 3, 2017
SHEET NO: C-201 / 12 OF 27

G:\SEC-----PROJECTS\116112 KAFB Groundwater Reclam Pipeline\ENGINEERING\CADD\PLANSET\C-201- Plan and Profile.dwg May 03, 2017 - 9:22am Saved By: jamiev

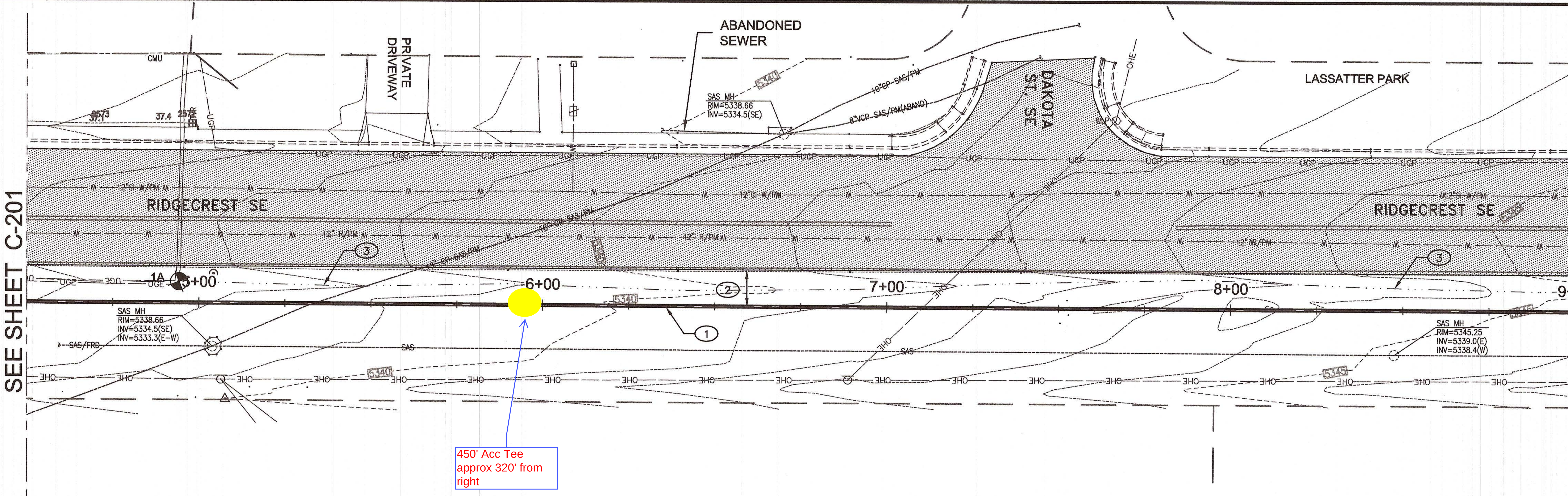

PLAN - STA: 4+50.00 TO STA: 9+00.00

SCALE: 1" = 20'

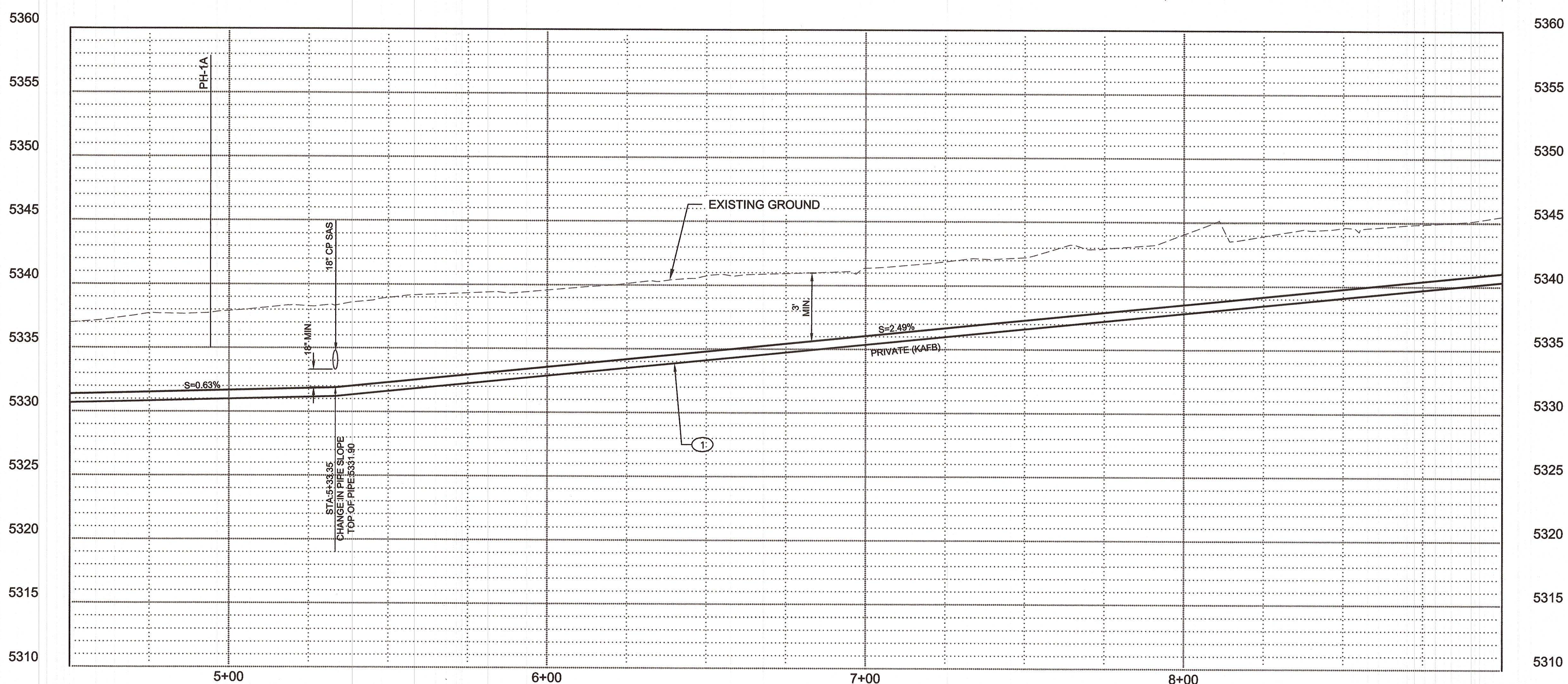

PROFILE - STA: 4+50.00 TO STA: 9+00.00

GENERAL NOTES:

1. MAINTAIN A MINIMUM OF 3 FEET OF SOIL COVER OVER INSTALLED 4"x8" DOUBLE WALL PIPE.
2. PROVIDE A MINIMUM OF 18" OF VERTICAL SEPARATION WHEN CROSSING OVER OR UNDER EXISTING UTILITIES.

KEYED NOTES:

1. NEW PRIVATE 4"x8" HDPE PIPELINE. SEE C-301, DETAIL 2 FOR TYP. TRENCH SECTION.
2. INSTALL PIPELINE 10' OFF EXISTING EDGE OF PAVEMENT. UNLESS OTHERWISE NOTED.
3. RESTORE EXISTING SWALE AFTER PIPELINE INSTALLATION IS COMPLETE. SEED SWALE AND ALL GROUND DISTURBED BY CONSTRUCTION WITH COA STANDARD SPEC. (1012) NATIVE GRASS SEED MIX AND PROCEDURES.

HORIZONTAL SCALE: 1" = 20'
VERTICAL SCALE: 1" = 5'

POTHOLE TABLE

NO.	DESCRIPTION	DEPTH
1A	2- 1.5" DIA. ELEC.	33"

COA PROJECT NO: 586082

Design Review Committee | City Engineer Approval | Mo./Day/Yr. | Mo./Day/Yr.

Last Design Update

GEORGE NEMETH, NEW MEXICO, 12284, REGISTERED PROFESSIONAL ENGINEER, 5-3-17

NO.	REVISION DESCRIPTION	DATE	BY
5			
4			
3			
2			
1			

Name
Location

KIRTLAND AIR FORCE BASE
BULK FUELS FACILITY
KAFB - 106239 CONVEYANCE LINE

CONVEYANCE LINE INSTALLATION
STA: 4+50 TO STA: 9+00

SMITH ENGINEERING COMPANY
2201 SAN PEDRO NE BLDG 4, SUITE 200
ALBUQUERQUE, NM 87110

JOB NO: 116112
DATE: MAY 3, 2017
SHEET NO: C-202 / 13 OF 27

Q:\SEC---PROJECTS\116112 KAFB Groundwater Reclaim Pipeline\ENGINEERING\CADD\PLANSET\C-202-Plan and Profile.dwg May 03, 2017 - 9:29am Saved By: jerriep

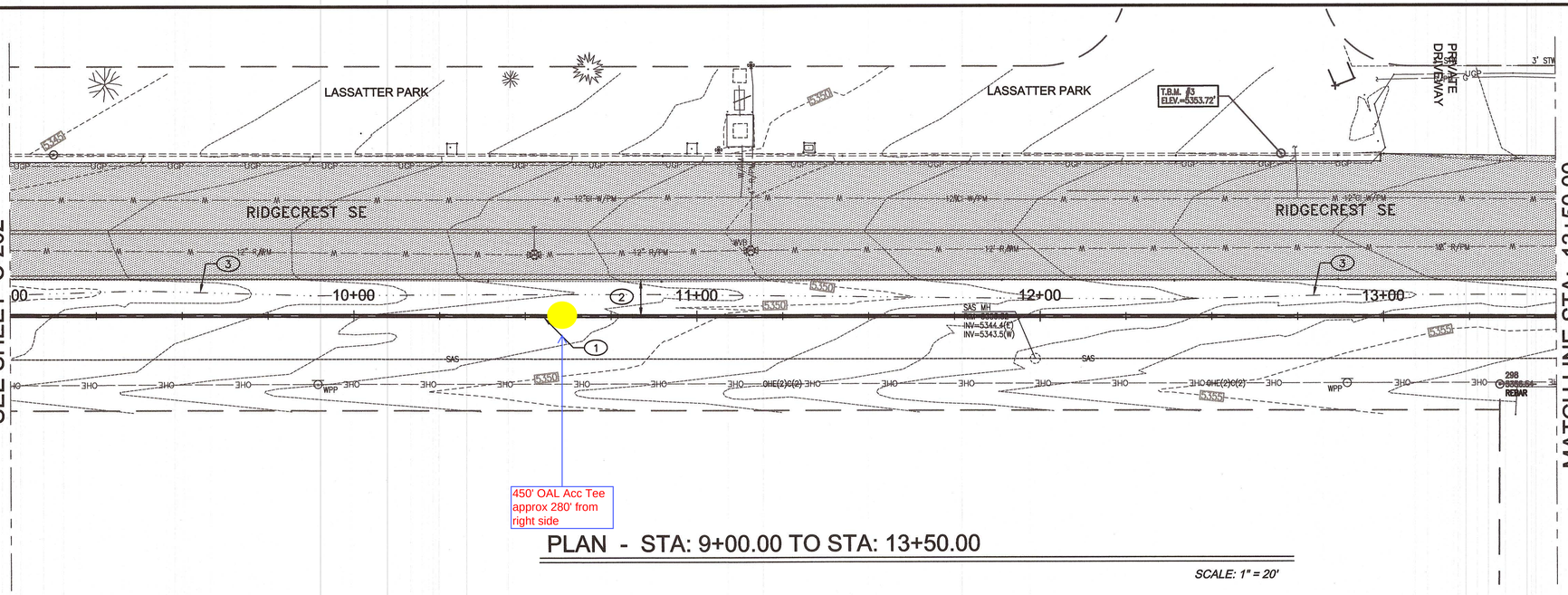

PLAN - STA: 9+00.00 TO STA: 13+50.00

SCALE: 1" = 20'

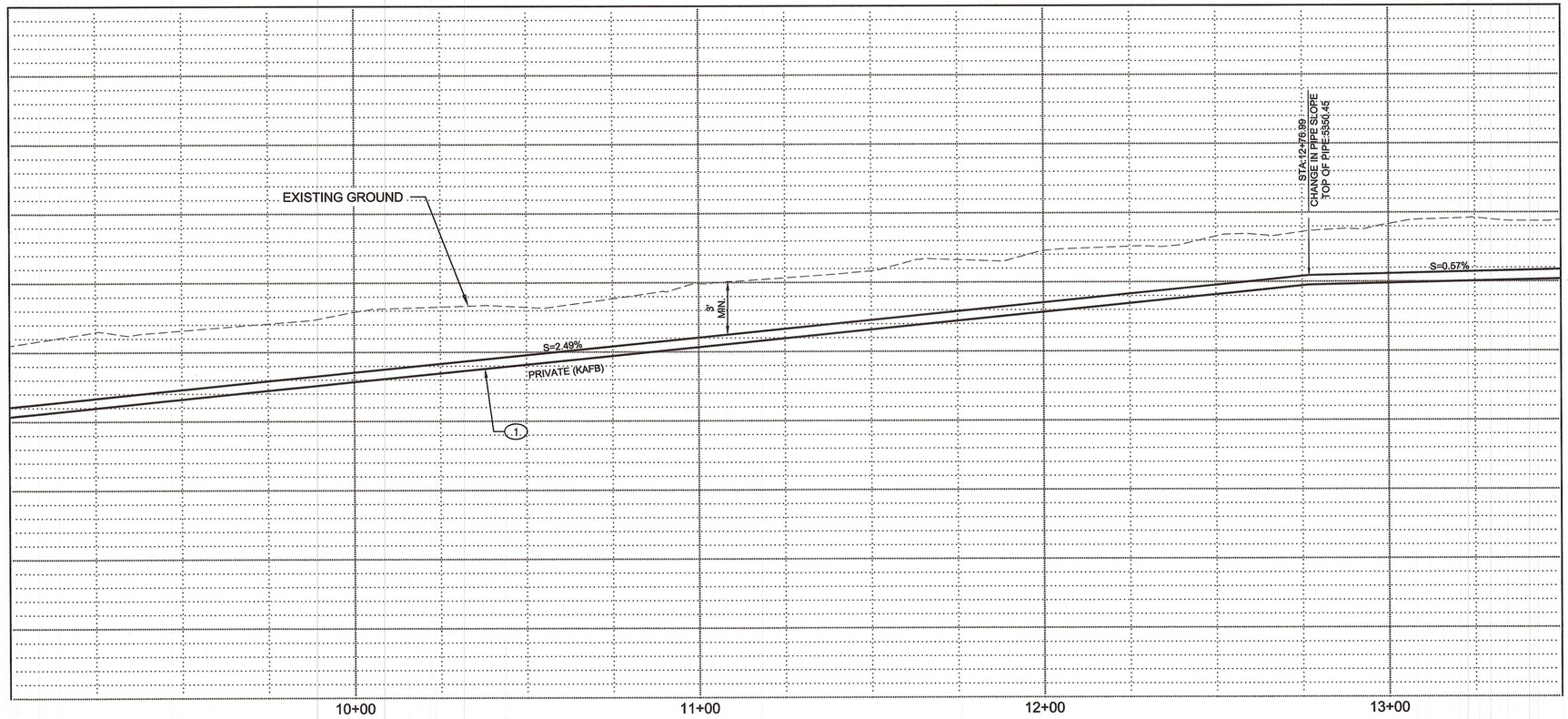

PROFILE - STA: 9+00.00 TO STA: 13+50.00

GENERAL NOTES:

1. MAINTAIN A MINIMUM OF 3 FEET OF SOIL COVER OVER INSTALLED 4"x8" DOUBLE WALL PIPE.
2. PROVIDE A MINIMUM OF 18" OF VERTICAL SEPARATION WHEN CROSSING OVER OR UNDER EXISTING UTILITIES.

KEYED NOTES:

(1) NEW PRIVATE 4"x8" HDPE PIPELINE. SEE C-301, DETAIL 2 FOR TYP. TRENCH SECTION.

(2) INSTALL PIPELINE 10' OFF EXISTING EDGE OF PAVEMENT. UNLESS OTHERWISE NOTED.

(3) RESTORE EXISTING SWALE AFTER PIPELINE INSTALLATION IS COMPLETE. SEED SWALE AND ALL GROUND DISTURBED BY CONSTRUCTION WITH COA STANDARD SPEC. (1012) NATIVE GRASS SEED MIX AND PROCEDURES.

HORIZONTAL
SCALE: 1" = 20'
VERTICAL
SCALE: 1" = 5'

20' 0 20' 40' 60' HORIZ.
5' 0 5' 10' 15' VERT.

GEORGE NEMETH
NEW MEXICO
12284
REGISTERED PROFESSIONAL ENGINEER
5-3-17

NO.	REVISION DESCRIPTION	DATE	BY
1			
2			
3			
4			
5			

Name
Location

KIRTLAND AIR FORCE BASE
BULK FUELS FACILITY
KAFB - 106239 CONVEYANCE LINE

CONVEYANCE LINE INSTALLATION
STA: 9+00 TO STA: 13+50

COA PROJECT NO: 586082

Design Review Committee	City Engineer Approval	Last Design Update	No. / Day / Yr.	No. / Day / Yr.

SMITH ENGINEERING COMPANY
2201 SAN PEDRO NE BLDG 4, SUITE 200
ALBUQUERQUE, NM 87110

JOB NO: 116112
DATE: MAY 3, 2017
SHEET NO: C-203 / 14 OF 27

Q:\SEC----PROJECTS\116112 KAFB Groundwater Reclam Pipeline\ENGINEERING\CADD\PLANSET\C-203--Plan and Profile.dwg May 03, 2017 - 9:31am Saved By: jerrep

MATCH LINE STA: 13+50.00
SEE SHEET C-203

MATCH LINE STA: 18+00.00
SEE SHEET C-205

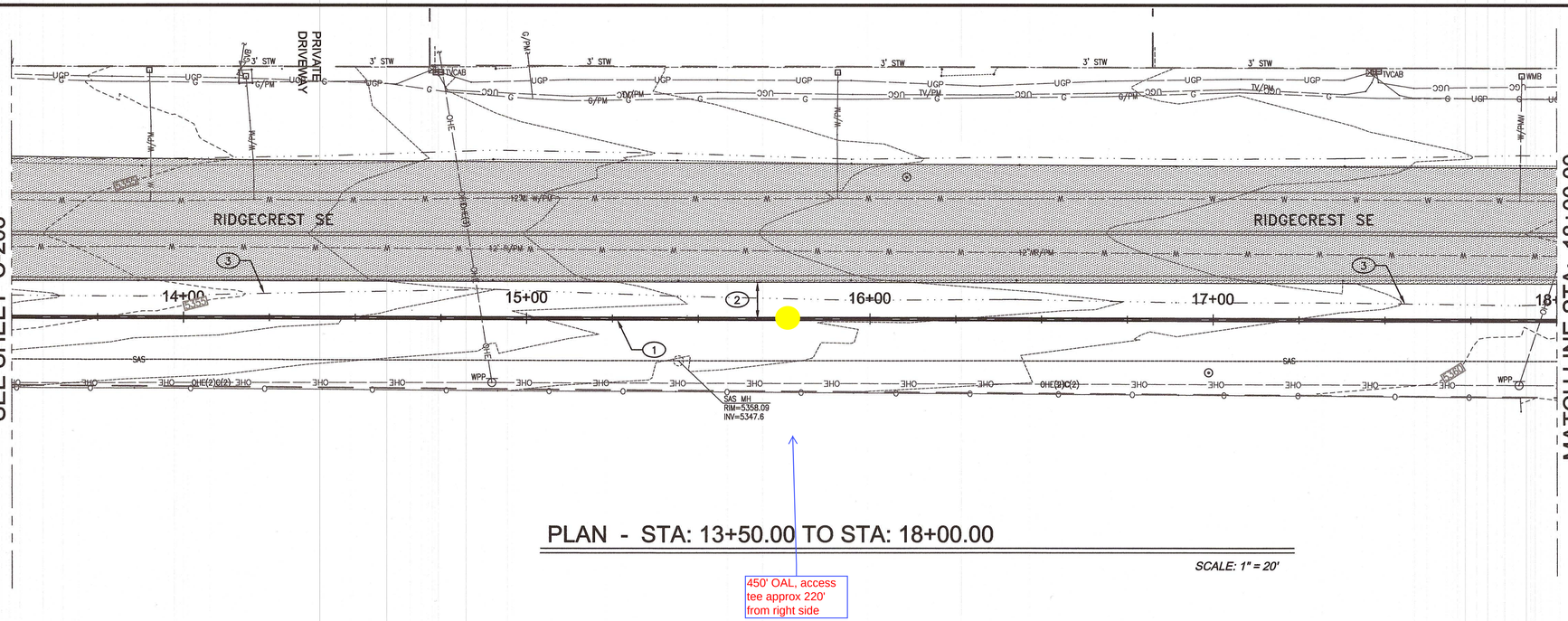

PLAN - STA: 13+50.00 TO STA: 18+00.00

SCALE: 1" = 20'

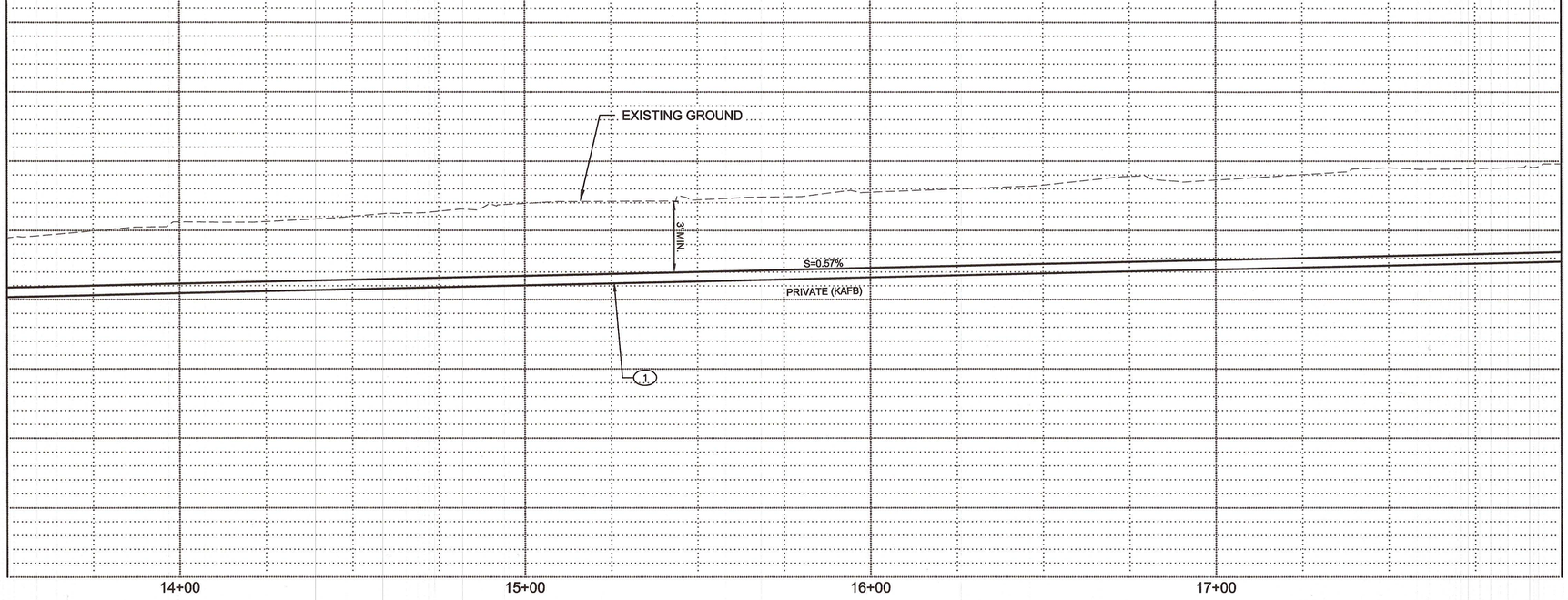

PROFILE - STA: 13+50.00 TO STA: 18+00.00

GENERAL NOTES:

1. MAINTAIN A MINIMUM OF 3 FEET OF SOIL COVER OVER INSTALLED 4"x8" DOUBLE WALL PIPE.
2. PROVIDE A MINIMUM OF 18" OF VERTICAL SEPARATION WHEN CROSSING OVER OR UNDER EXISTING UTILITIES.

KEYED NOTES:

(1) NEW PRIVATE 4"x8" HDPE PIPELINE. SEE C-301, DETAIL 2 FOR TYP. TRENCH SECTION.

(2) INSTALL PIPELINE 10' OFF EXISTING EDGE OF PAVEMENT. UNLESS OTHERWISE NOTED.

(3) RESTORE EXISTING SWALE AFTER PIPELINE INSTALLATION IS COMPLETE. SEED SWALE AND ALL GROUND DISTURBED BY CONSTRUCTION WITH COA STANDARD SPEC. (1012) NATIVE GRASS SEED MIX AND PROCEDURES.

HORIZONTAL
SCALE: 1" = 20'
VERTICAL
SCALE: 1" = 5'

20' 0 20' 40' 60' HORIZ.
5' 0 5' 10' 15' VERT.

COA PROJECT NO: 586082

Design Review Committee	City Engineer Approval	Last Design Update	No. / Day / Yr.	No. / Day / Yr.

GEORGE NEMETH
NEW MEXICO
12284
REGISTERED PROFESSIONAL ENGINEER
5-3-17

NO.	REVISION DESCRIPTION	DATE	BY
5			
4			
3			
2			
1			

Name
Location

KIRTLAND AIR FORCE BASE
BULK FUELS FACILITY
KAFB - 106239 CONVEYANCE LINE

CONVEYANCE LINE INSTALLATION
STA: 13+50 TO STA: 18+00

SMITH ENGINEERING COMPANY
2201 SAN PEDRO NE BLDG 4, SUITE 200
ALBUQUERQUE, NM 87110

JOB NO: 116112
DATE: MAY 3, 2017
SHEET NO: C-204 / 15 OF 27

Q:\SEC-----PROJECTS\116112 KAFB Groundwater Reclam Pipeline\ENGINEERING\CADD\PLANSET\C-204-plan and Profile.dwg May 03, 2017 - 9:35am Saved By: jerrep

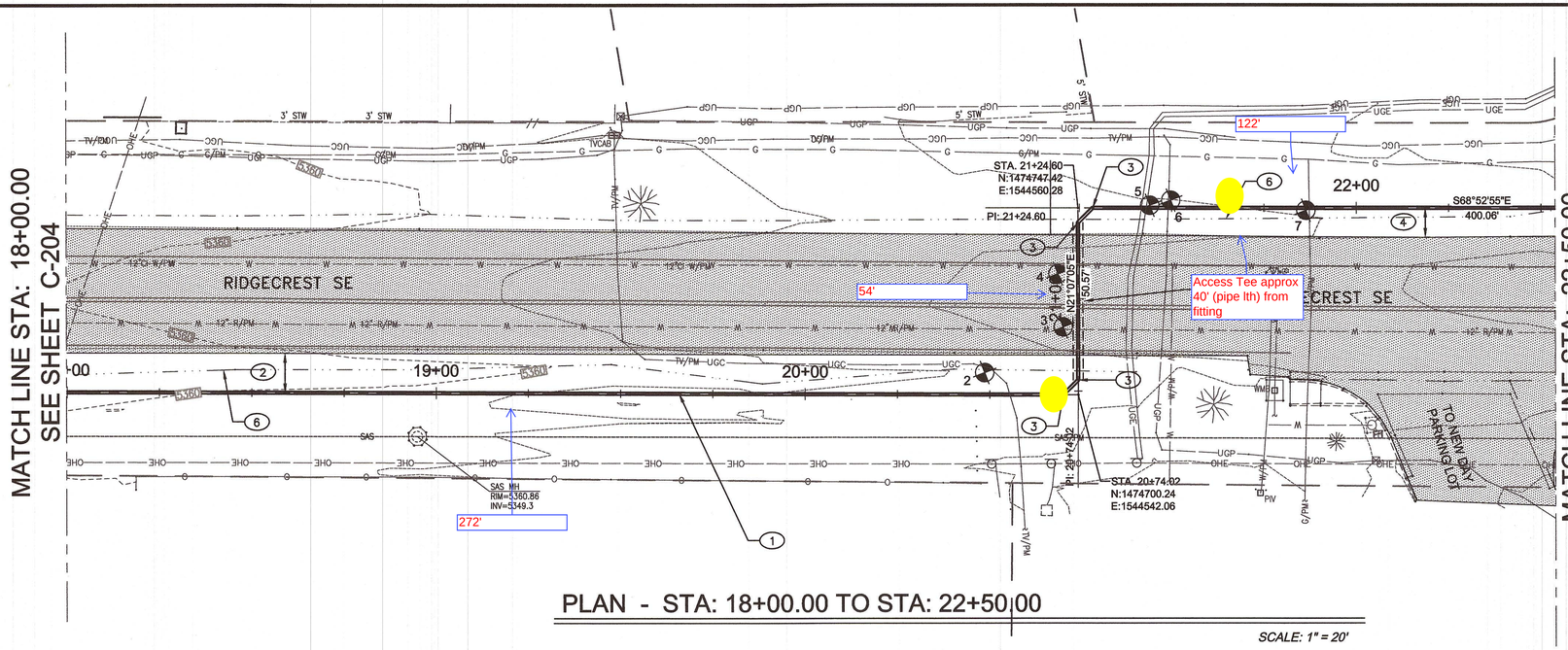

PLAN - STA: 18+00.00 TO STA: 22+50.00

SCALE: 1" = 20'

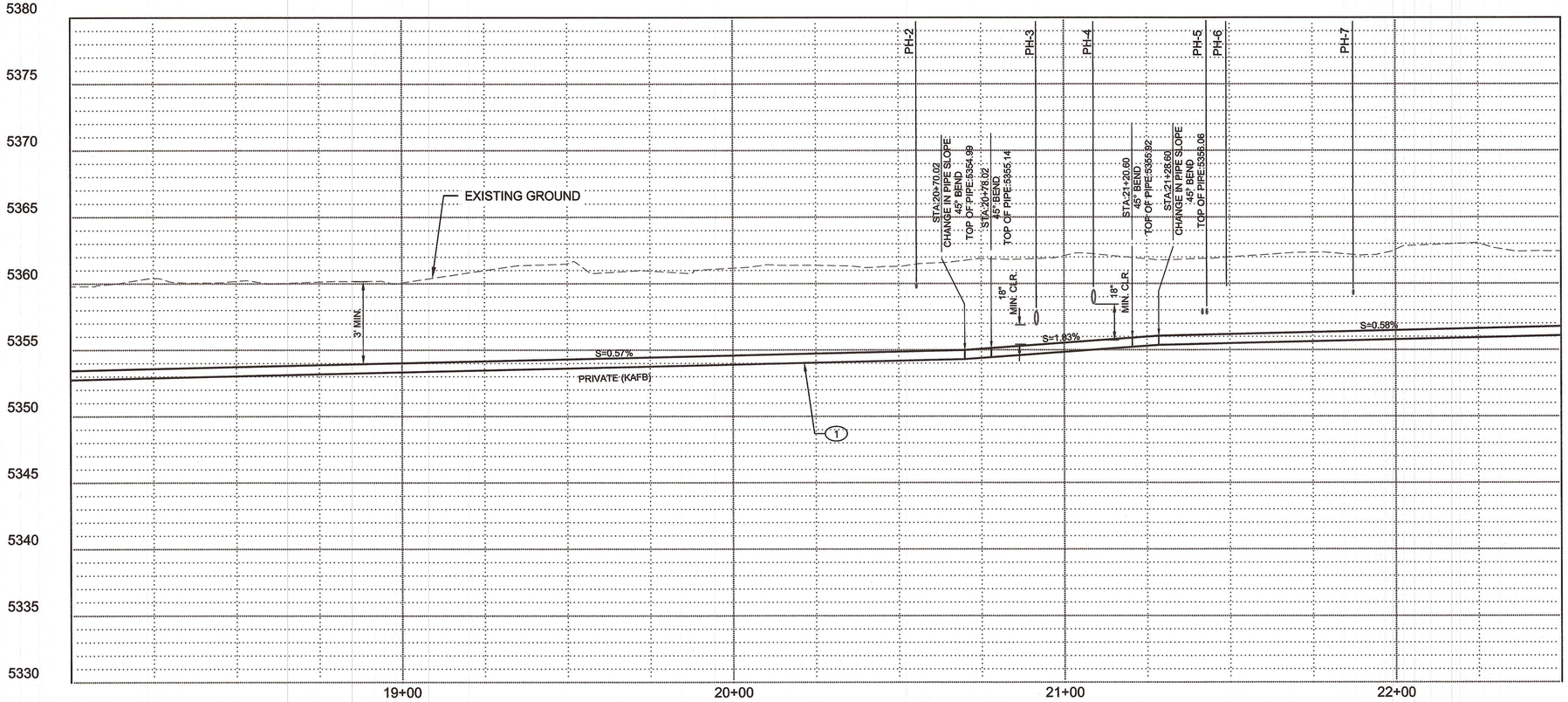

PROFILE - STA: 18+00.00 TO STA: 22+50.00

GENERAL NOTES:

1. MAINTAIN A MINIMUM OF 3 FEET OF SOIL COVER OVER INSTALLED 4"x8" DOUBLE WALL PIPE.
2. PROVIDE A MINIMUM OF 18" OF VERTICAL SEPARATION WHEN CROSSING OVER OR UNDER EXISTING UTILITIES.

KEYED NOTES:

1. NEW PRIVATE 4"x8" HDPE PIPELINE. SEE C-301, DETAIL 2 FOR TYP. TRENCH SECTION.
2. INSTALL PIPELINE 10' OFF EXISTING EDGE OF PAVEMENT. UNLESS OTHERWISE NOTED.
3. 45° BEND
4. INSTALL PIPELINE 8' OFF EXISTING EDGE OF PAVEMENT. UNLESS OTHERWISE NOTED.
5. HORIZONTAL DIRECTIONAL DRILL FROM STA. 20+74.02 TO STA. 21+24.60. EXISTING ASPHALT TO REMAIN UNDISTURBED.
6. RESTORE EXISTING SWALE AFTER PIPELINE INSTALLATION IS COMPLETE. SEED SWALE AND ALL GROUND DISTURBED BY CONSTRUCTION WITH COA STANDARD SPEC. (1012) NATIVE GRASS SEED MIX AND PROCEDURES.

HORIZONTAL
SCALE: 1" = 20'
VERTICAL
SCALE: 1" = 5'

20' 0 20' 40' 60' HORIZ.
5' 0 5' 10' 15' VERT.

POTHOLE TABLE

NO.	DESCRIPTION	DEPTH
2	1.5" DIA. HDPE CATV	17"
3	12" DIA. PVC WATER	50"
4	12" DIA. CI WATER	32"
5	1" DIA. ELEC	48"
6	1" DIA. TEL	28"
7	1.5" DIA. HDPE GAS	31"

COA PROJECT NO: 586082

GEORGE NEMETH NEW MEXICO 12284 REGISTERED PROFESSIONAL ENGINEER
5-3-17

NO.	REVISION DESCRIPTION	DATE	BY
5			
4			
3			
2			
1			

Name
Location

KIRTLAND AIR FORCE BASE
BULK FUELS FACILITY
KAFB - 106239 CONVEYANCE LINE

CONVEYANCE LINE INSTALLATION
STA: 18+00 TO STA: 22+50

Design Review Committee | City Engineer Approval | Last Design Update | No. / Day / Yr. | No. / Day / Yr.

SMITH ENGINEERING COMPANY
2201 SAN PEDRONE BLDG 4, SUITE 200
ALBUQUERQUE, NM 87110

JOB NO: 116112
DATE: MAY 3, 2017
SHEET NO: C-205 / 16 OF 27

Q:\SEC-----PROJECTS\116112 KAFB Groundwater Reclam Pipeline\ENGINEERING\CADD\PLANSET\C-205-Plan and Profile.dwg May 03, 2017 - 9:38am Saved By: jarriep

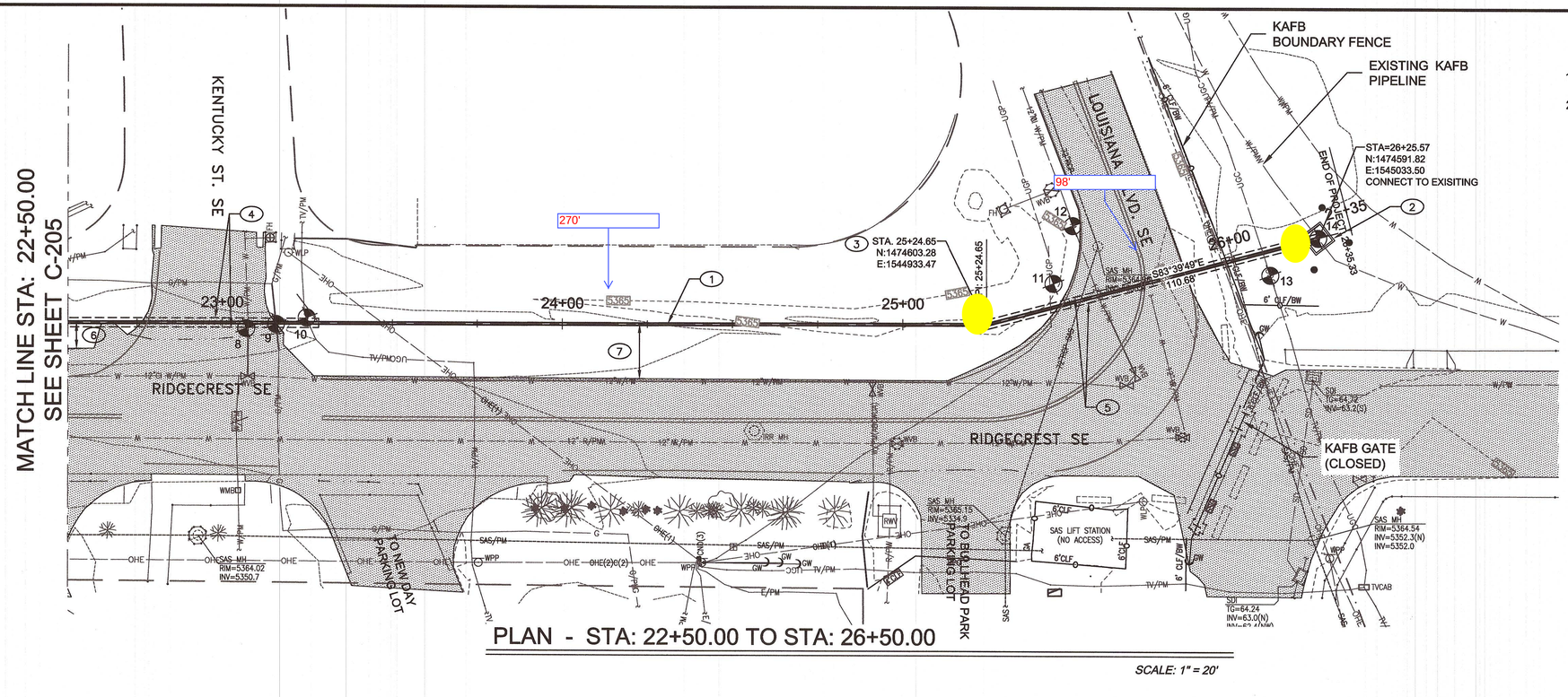

PLAN - STA: 22+50.00 TO STA: 26+50.00

SCALE: 1" = 20'

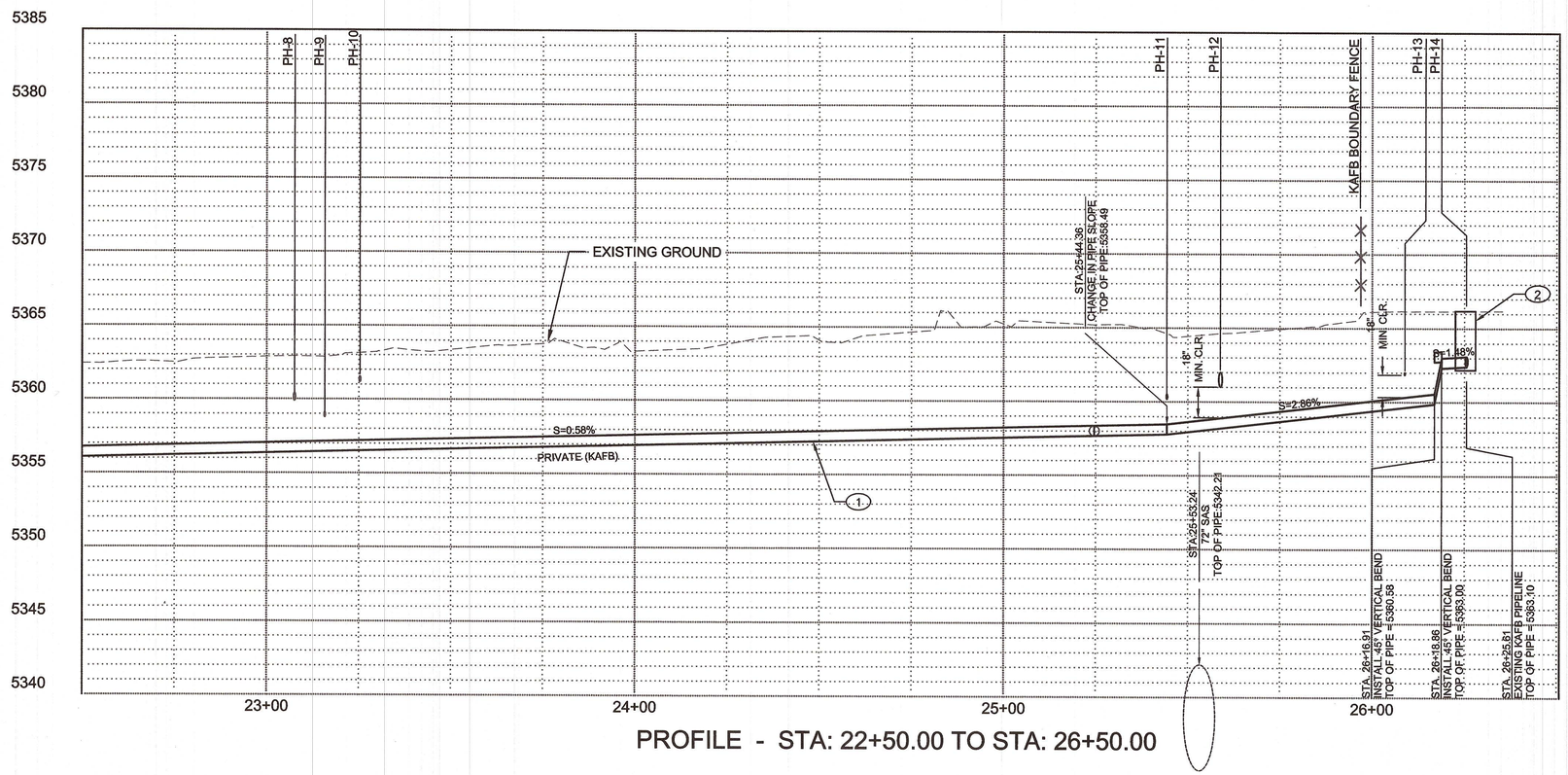

PROFILE - STA: 22+50.00 TO STA: 26+50.00

GENERAL NOTES:

1. MAINTAIN A MINIMUM OF 3 FEET OF SOIL COVER OVER INSTALLED 4"x8" DOUBLE WALL PIPE.
2. PROVIDE A MINIMUM OF 18" OF VERTICAL SEPARATION WHEN CROSSING OVER OR UNDER EXISTING UTILITIES.

KEYED NOTES:

1. NEW PRIVATE 4"x8" HDPE PIPELINE. SEE C-301, DETAIL 2 FOR TYP. TRENCH SECTION
2. NEW REINFORCED PRECAST CONCRETE JUNCTION VAULT W/ - 4 GUARD POSTS. SEE C-301 DETAIL 3.
3. 15° BEND
4. HORIZONTAL DIRECTIONAL DRILL FROM STA. 22+54.19 TO STA. 23+28.32. EXISTING ASPHALT TO REMAIN UNDISTURBED.
5. HORIZONTAL DIRECTIONAL DRILL FROM STA. 25+ 24.65 TO STA. 26+25.57. EXISTING ASPHALT TO REMAIN UNDISTURBED.
6. INSTALL PIPELINE 8' OFF EXISTING EDGE OF PAVEMENT. UNLESS OTHERWISE NOTED.
7. INSTALL PIPELINE 16' OFF EXISTING EDGE OF PAVEMENT. UNLESS OTHERWISE NOTED.

POTHOLE TABLE

NO.	DESCRIPTION	DEPTH
8	6" DIA PVC WL	29"
9	2" DIA. STEEL GAS	44"
10	2.5" CATV	21"
11	4" DIA. HDPE FIBER OPTIC	49"
12	12" DIA. DI WATER	34"
13	2 - 2" COMM.	48" & 50"
14	8" WATER	37"

DEPTH IS TO TOP OF UTILITY.

GEORGE NEMETH NEW MEXICO 12284 REGISTERED PROFESSIONAL ENGINEER
5-3-17

NO.	DESCRIPTION	DATE	BY
1			
2			
3			
4			
5			

Name
Location

KIRTLAND AIR FORCE BASE
BULK FUELS FACILITY
KAFB - 106239 CONVEYANCE LINE

CONVEYANCE LINE INSTALLATION
STA: 22+50 TO STA: 26+50

SMITH ENGINEERING COMPANY
2201 SAN PEDRO NE BLDG 4, SUITE 200
ALBUQUERQUE, NM 87110

COA PROJECT NO: 586082

Design Review Committee	City Engineer Approval	Last Design Update	No. / Day / Yr.	No. / Day / Yr.

JOB NO: 116112
DATE: MAY 3, 2017
SHEET NO: C-206 / 17 OF 27

Q:\SEC----PROJECTS\116112 KAFB Groundwater Reclam Pipeline\ENGINEERING\CADD\PLANSET\C-206-Plan and Profile.dwg May 03, 2017 - 8:41am Saved By: jamier

Access Tee

Access Port with Flange
Part Number + Size Code

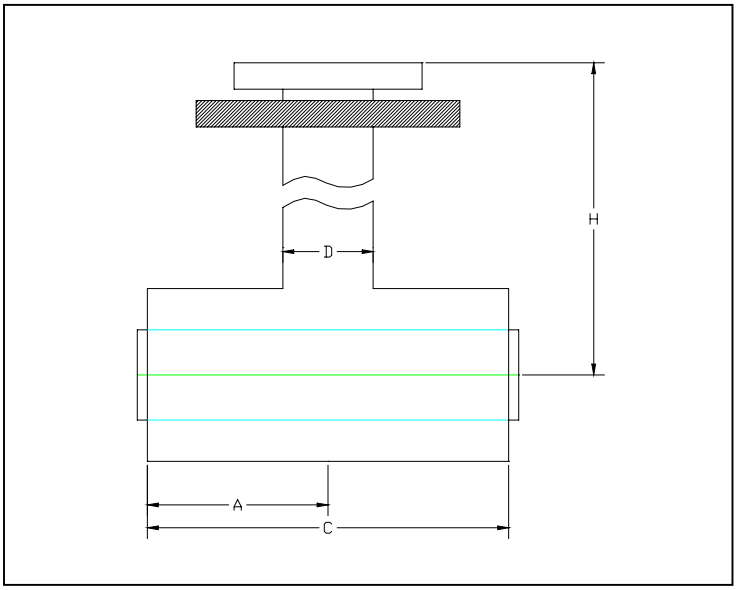

SDR RATING	11 x 11	11 x 17	11 x 26	11 x 32.5	17 x 17	17 x 26	17 x 32.5	26 x 26	26 x 32.5	32 x32
PART # Number	4916	4917			4918					

SIZE	Size code	A	C	D	H
1” x 4”	401	6.0”	12.0”	4.5”	Varies
2” x 6” 3” x 6”	530 531	9.0”	18.0”	4.5”	Varies
3” x 8” 4” x 8”	582 583	9.0”	18.0”	4.5”	Varies
6” x 10”	627	9.0”	18.0”	4.5”	Varies
8” x 12”	660	9.0”	18.0”	4.5”	Varies

Asahi America Inc. 35 Green St Malden Ma 02148 Office 1-781-321-5409 Fax 1-781-321-4421
Email: asahi@asahi-america.com
Internet: www.asahi-america.com

Leak Detection/Location Systems

PAL-AT® • LIQUIDWATCH® • FLUIDWATCH®

PermAlert™

Division of Perma-Pipe, Inc.

PAL-AT detects and locates leaks for

~~Data Centers~~, Jet Fuel Systems, Tank Farms, ~~Clean Rooms and Other Applications~~

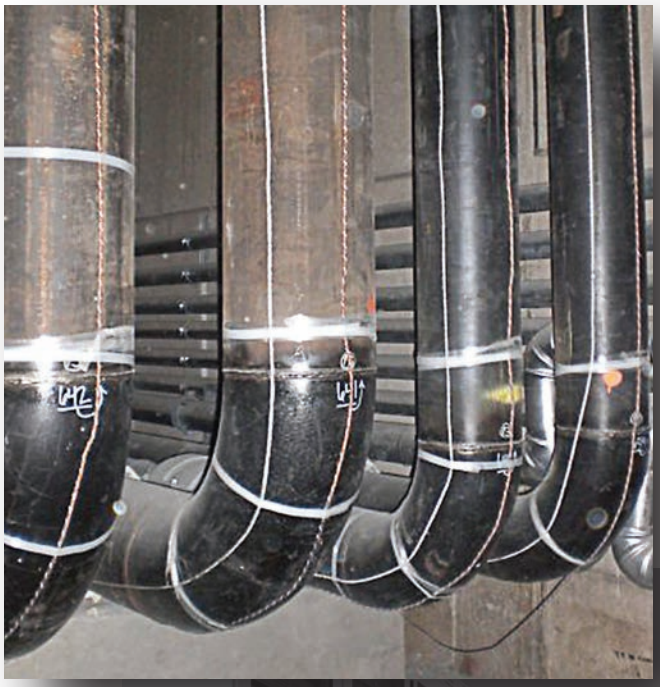

Why PAL-AT®? *Control the damage and you control costs*

In most monitoring situations, just knowing that you have a liquid leak is not good enough. You need to know: Where is it? When did it occur? Where did it start? Is there more than one leak? You need accurate information and you need it now!

The sooner you pinpoint the where and when, the sooner you can begin to control and minimize damage to your facility, personnel, the environment and to your balance sheet.

With PAL-AT® you can have this type of information instantly. PAL-AT is a sophisticated micro-processor system with multi-sensing and remote monitoring capabilities. Its advanced technology provides dependable around the clock surveillance of all monitored areas. And it's the first system to actually help manage your risks and associated costs.

PAL-AT® ADVANTAGES

Wet Cable Start Up and Multiple Leak Location and Multilevel Alarms: Because the PAL-AT system uses data specific to the condition of the installed sensor cable, the system's software can incorporate short lengths of wet cable in a reference map. This allows continous monitoring, even though the cable may be wet due to liquid entering the monitored area during installation, condensation at start up or small leaks in the system. After moisture is detected, a "new" reference map is made automatically to continue to provide leak surveillance. Changes in the cable in relation to the new reference map from additional sections of wet cable (additional or growing leak), will cause PAL-AT to re-alarm. The alarm queue stores the information for retrieval by the BMS, PALCOM® 10 or by the operator at the panel.

Versatility: PAL-AT models can monitor up to four separate sensing zones each having up to 7,500 ft (2300 m) of sensor cable. Each sensor cable can be integrated with liquid probes and float switches for the monitoring of underfloor areas, sumps, trays, single and/or double-wall piping and tanks. The PAL-AT system permits cost effective installation of complex systems, with its ability to integrate different cable types and probes that can monitor for leaks in multiple piping networks, tanks, subfloors and other sensitive work areas. Hydrocarbon sensing cables can be direct buried for monitoring pipelines and aboveground storage tanks.

Low Power Installation: For solar and/or battery applications, 24 VDC connection and reduced power consumption is available to reduce power supply initial costs. A four sensor circuit unit is available to effectively monitor pipelines.

Communications: can be via Ethernet, RS-485, RS-232, or other means, as desired by the user.

System Archives: Date and time ledgers of all significant operating events, including power failure, cable leak/short/break/fault and probe activation are stored in permanent memory. The stored documentation is very helpful to the system's operator to establish if clean-up, repairs and other remedial efforts were promptly performed and in compliance with local codes.

Security System: PAL-AT has a multi-level security password system that requires a security code before accepting commands for advanced system functions. This allows access to control functions, based on the operator's responsibilities.

UL Listed, FM Approved, CE compliance and EPA Third Party Tested: The optional Zener Barrier Panel is UL (US and Canada), FM, ATEX, IECEx listed to provide connections for intrinsically safe sensor circuits for use Class I, Division 1, Groups C and D or Zone 0, Group IIB hazardous locations.

Other Features:

- 2 line X 40 character display, showing status, date and time
- Keypad entry of system data and alarm acknowledgement
- RS232 and RS485 serial ports
- Ethernet connection and Modbus TCP/IP
- Modbus RTU
- Remote trouble shooting and control using PALCOM® 10 software
- Battery back-up of date and time functions
- Programmable Relays: SPDT, 10A, 250 VAC
- Automatic restart when power is restored after power loss
- Available in other languages

FM APPROVED
c UL us LISTED
IEC IECEx

Leak Detection *At Work*

PermAlert leak detection systems provide protection for the following applications:

Wet Benches
Dry Storage
Pharmaceutical Manufacturing
Process Control Rooms
File Storage Areas
Sprinkler System Monitoring
Chemical Storage Areas
Environmental Chambers
Microfilm Storage Rooms
Military Mothballing Facilities
Cable Trays and Tunnels
Microwave Relay Stations
Museum Storage
Radioactive Liquid Storage
Landfill Leachate Piping Systems
Hazardous Chemical Storage
Mining Industry
POP Sites

Double-Wall Piping
Buried Chilled/Hot Water Lines
Buried Steam Lines
Hospital Operating Rooms
Ground Water Monitoring
Manholes, Electrical/Mechanical
Process Drain Lines
Solvent Leak Detection
Acid Leak Detection
Electrical Vaults
Laboratories
Underground Storage Tanks
Data Centers
Airport Hydrant Systems
Semiconductor Facilities
Computer Rooms
Tank Farms, Above/Below Grade
Web Hosting Facilities

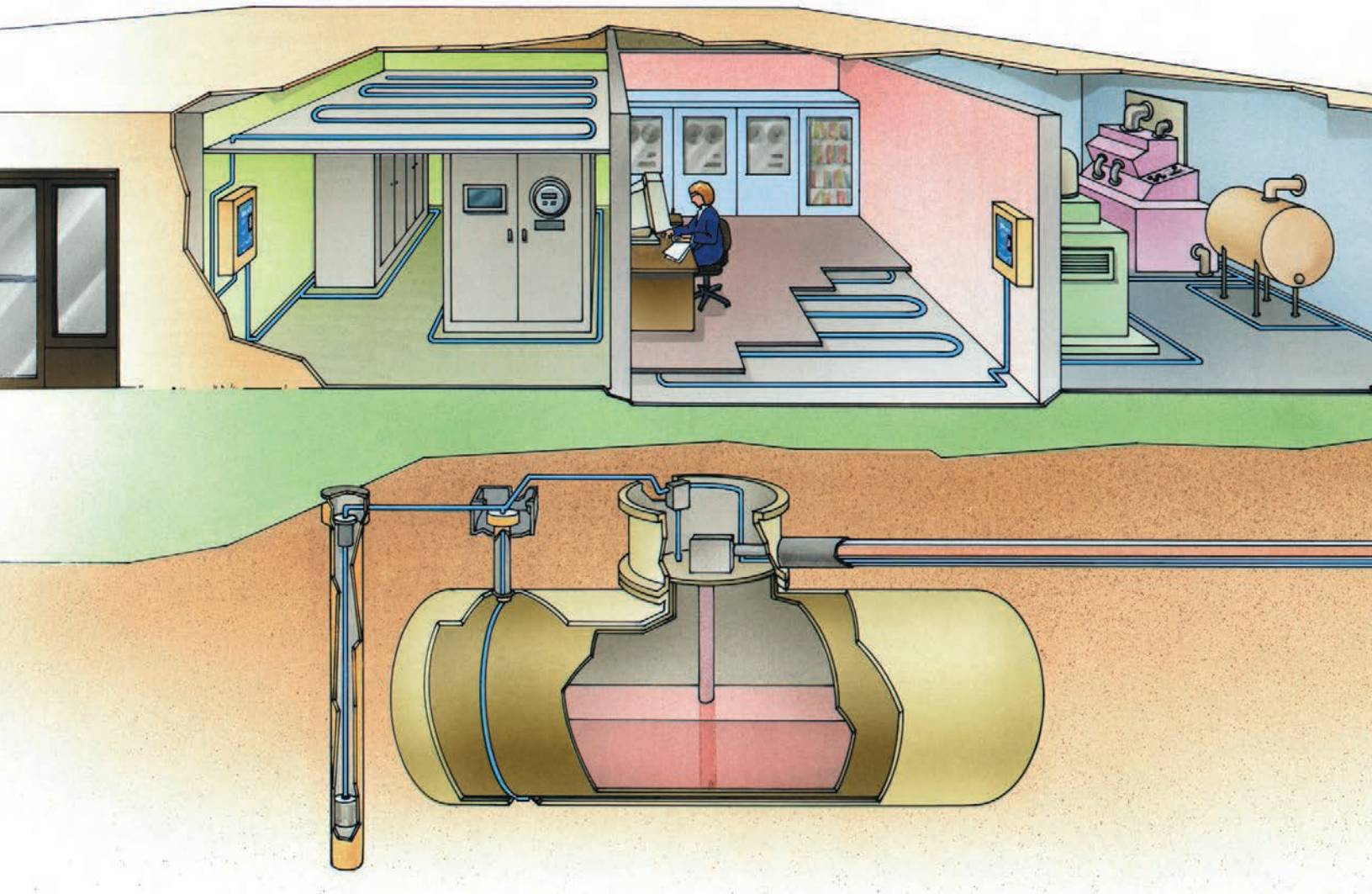

Centralized Operations with *PALCOM® 10 Network Software*

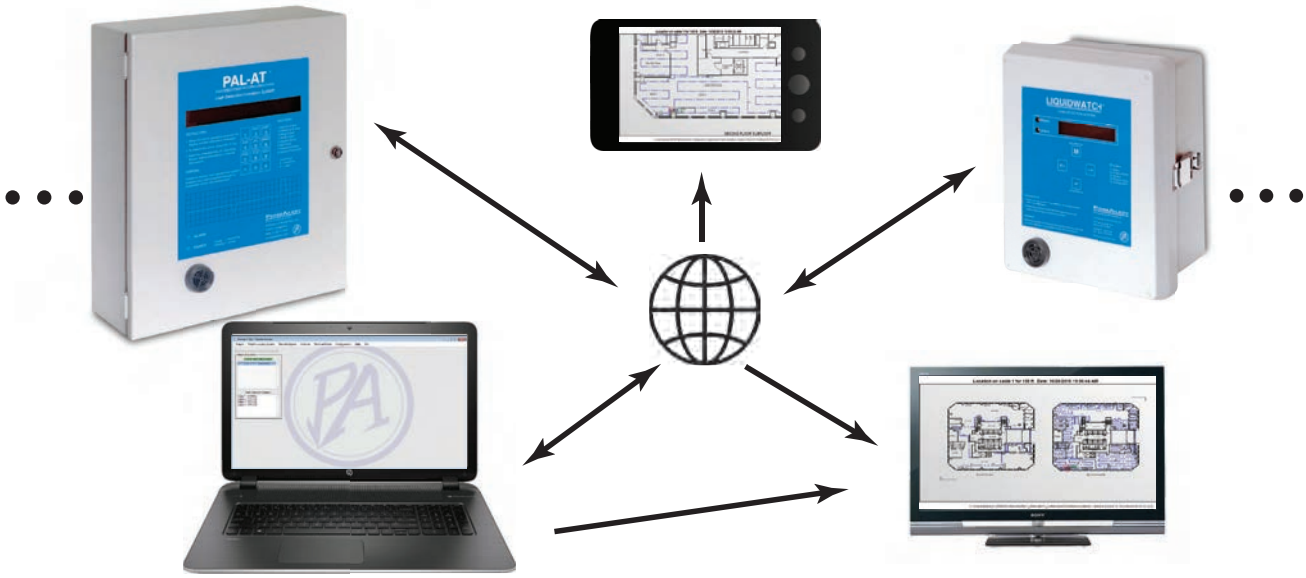

PALCOM® 10 w/GLS is an interactive remote monitoring software package for Windows®. It is designed to remotely monitor up to 254 PAL-AT® cable leak detection systems and LiquidWatch® probe leak detection systems. A computer is connected to the systems via Ethernet, RS-485 or RS-232. The software is supplied with two auxiliary programs, GLSViewer and GraphViewer.

Graphic Locator System (GLS) drawings are displayed with **GLSViewer**. A GLS drawing shows a leak detection installation and a flashing icon identifies the location of a problem on a sensor cable or probe. This enables an operator to locate the problem quickly without having to locate a hardcopy site reference drawing.

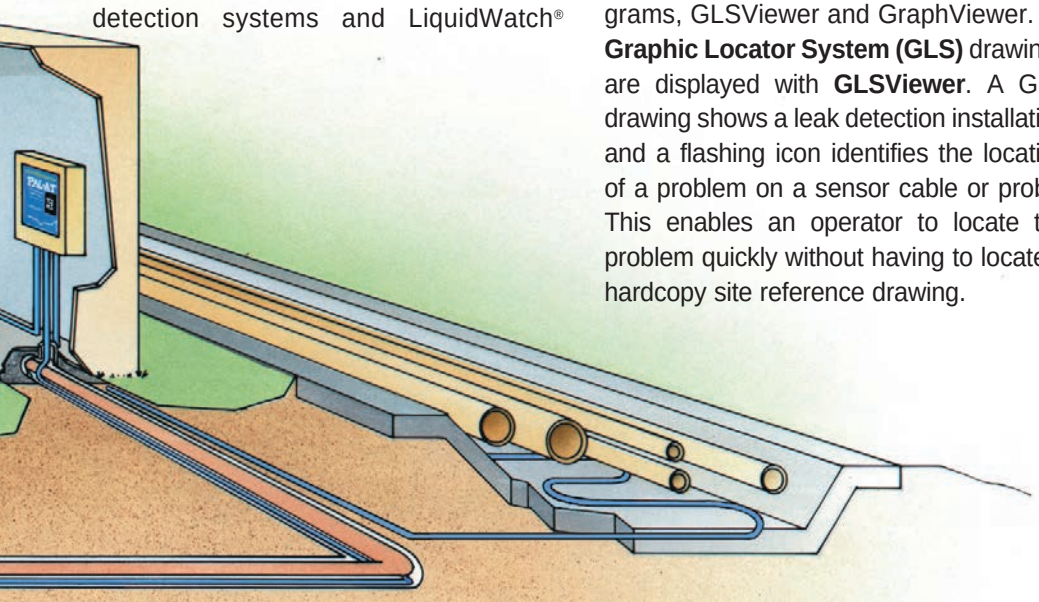

The **Graph** feature is only used with PAL-AT systems. PALCOM captures and plots PAL-AT "map" data. The graphs are opened automatically in **GraphViewer**. The graphs are TDR (time-domain reflectometry) traces and can be interpreted by trained personnel who are familiar with characteristics of the PAL-AT system. This documentation can be used for compliance records and troubleshooting.

The **Automonitor** function continuously checks all leak detection systems and updates the status of the systems 24/7. The status of each system and each cable is displayed. PALCOM automatically keeps a record of all archived events, which can be reviewed or printed.

SMS email and text messages are sent when an event is detected. An email message includes several images of the GLS drawing that zoom in to the event location. This provides 24/7 notification of leak detection events to any location.

Remote Keypad enables an operator to view the LCD display information and operate all functions of a system by using the computer keyboard instead of being at the alarm panel.

PAL-AT® *Sensor Cable*

The PAL-AT sensing string can be made up of any combination of probes and sensor cables. Sensor cables and probes are designed to serve a wide variety of applications.

With PAL-AT's sensor technology, the system is not subject to false alarms caused by dust or other non-liquid conductive materials that may come in contact with the cable or from casually stepping on the cable. Several sensor cables are capable of detecting and locating both water-based and hydrocarbon liquids and others will detect only hydrocarbons, ignoring water. In some applications, the sensor cable can be dried and reused after a leak is repaired and clean up has been completed. The state-of-the-art "Gold cables" have no exposed metal and are designed for corrosive chemical applications. The length of sensor cable that must be "wetted" with a specific liquid, before an alarm condition occurs, is referred to as the cable sensitivity. Sensitivity is a function of sensor string length and PAL-AT monitoring panel settings.

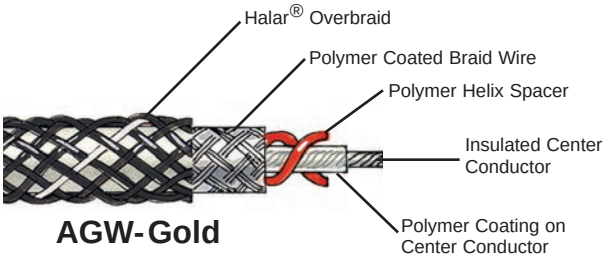

AGW-Gold is a quick drying cable, that is chemically resistant and designed to detect highly corrosive liquid leaks, such as acids, bases and solvents. Typical applications are secondary containment pipes, computer rooms, sub-floors of clean rooms and high temperature applications.

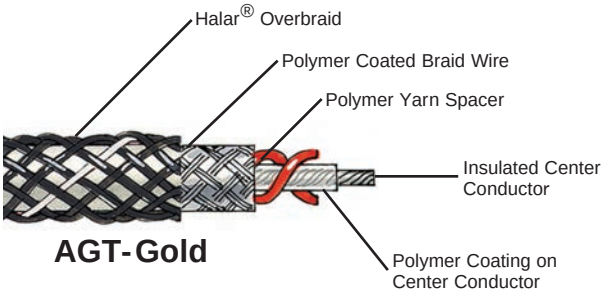

~~**AGT-Gold** is a wicking cable specially designed for the detection of accumulations at a shallow depth of 1/16 inch of liquid. The cable is chemically resistant and designed to detect water, highly corrosive acid, base and solvent leaks. Typical applications are in computer rooms (attached to single wall piping), clean room sub-floors, aboveground single wall pipes and equipment applications. AGT-Gold is suitable for stable, humidity-controlled rooms. This cable requires more drying time than AGW-Gold.~~

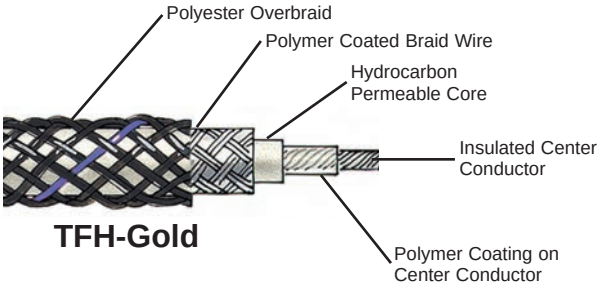

~~**TFH-Gold** is a wicking cable specifically designed to detect only hydrocarbons. This cable may be direct buried in slotted PVC screen pipe to a maximum depth of 20 feet (6m) to locate fuel leaks while ignoring the presence of water. This cable is ideal for monitoring single-wall pipes and tanks.~~

In addition to sensor cable, PermAlert provides jumper cables. Jumper cable is used to connect the monitoring unit and sensing string or link sensing strings between monitored areas.

PERMALERT *Probes*

Probes monitor for leaks at specific locations. PermAlert offers several probes to monitor for water-based liquids, chemicals and/or hydrocarbons. They can be connected in series to the sensing string for PAL-AT or wired to the LiquidWatch System.

PHLR Probe will only detect hydrocarbon liquid and is typically installed in the interstitial space of double-wall tanks, sumps, double contained piping or other low points for detecting hydrocarbon leakage.

PWS Probes will detect water-based liquids.

PSTV and PTHL Probes are float switches, designed for installation in a 2" stand pipe on double-wall tanks. They allow monitoring of the interstitial space of a double-wall tank or high/low level of the product in the tank. Special materials are available for specific liquids for chemical compatability.

PFS Probe is a float switch designed to monitor liquids in manholes, sumps, etc. It will detect water-based or hydrocarbon liquids. Special materials are available for specific liquids for chemical compatability.

Speciality Probes: With the use of the PA10 (LiquidWatch) and the PT10 (PAL-AT) our systems can monitor probes that are specially required for given applications providing for greater flexibility in meeting customers requirements.

PT10 Probe Integrator and the PA10 Adapter monitor any normally-closed or normally-open switch that indicates an alarm condition. The switches can be temperature, pressure or other sensors, as required. Typical examples are reed type float switches in double contained piping and brine monitoring switches in double-wall tanks.

How does PAL-AT work?

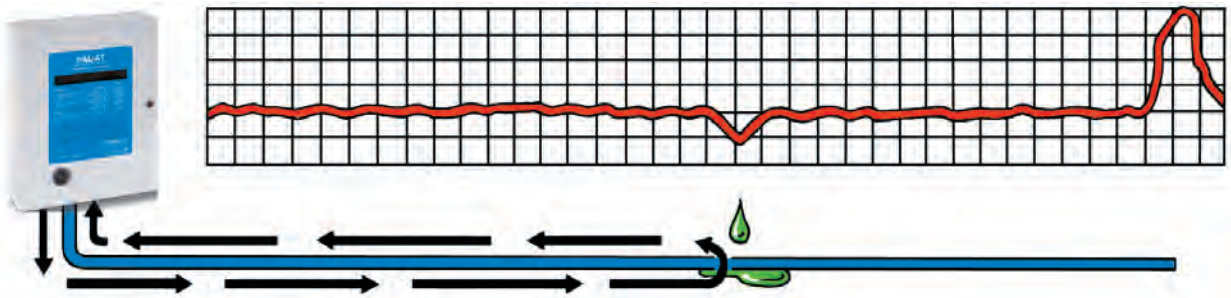

PAL-AT operates similar to radar by sending out safe energy pulses, two thousand times each second on the sensor cable. The reflections (echoes), generated by these energy pulses are specific to the condition of the installed sensor cable. These reflections are stored in memory as a reference map. The alarm unit continuously measures the cable reflections and compares them with the values of the reference map stored in memory. Liquids in sufficient quantities to "wet" the sensor cable will alter the cable's impedance at the leak location. This alteration of impedance will change the energy reflected from the cable at this location. The monitoring unit recognizes the change in energy reflection from the wet portion of cable and enters into alarm. A new reference map with the change is stored automatically allowing monitoring to continue. The alarm queue stores the alarm messages and must be cleared by the operator. The system also detects and locates breaks, shorts and probe activations. This allows for fast response to the location of the alarm for repairs or remedial action.

The PAL-AT locates the point of origin of a leak or cable fault within ± 0.3% of the sensor string length or ± 6 feet, whichever is greater for water based liquids and ± 0.6% of the sensor string or ± 6 feet for hydrocarbon liquids. In the alarm mode, the unit activates output relays to facilitate the control of valves or remote alarms, while providing output to the BMS via Modbus, PALCOM 10, audio and visual alarms, including a digital display of the distance to the leak origin at the panel.

LiquidWatch® *Leak Detection Systems*

PRODUCT FEATURES

- Sensing of organic liquids (hydrocarbons and solvents) or water within seconds of contact
- Vapor and gases are ignored
- Remote monitoring capability with an RS-232 interface and relays
- UL, cUL Listed with Class I, Division 1, Groups C & D sensor circuits optional
- NEMA 4X Enclosure
- Up to 64 probes and 16 programmable alarm relays available
- Optional Modbus RTU Available

Specifications

Part 1 - System

1.1 The Discrete Point Monitoring System (D.P.M.S.) shall consist of a monitoring unit, probe module, relay module and probes. The D.P.M.S. shall be capable of detecting liquids in contact with a sensor probe connected to the monitoring panel. It shall not detect vapors or gases.

1.2 When liquid is detected, an audible alarm shall sound and an LCD readout of the probe activation shall be visible on the front display. The D.P.M.S. system shall alarm within one (1) minute or less after contact with liquid, depending on the liquid.

1.3 The system supplier shall have at least ten (10) years experience in the manufacturing of leak detection systems.

Part 2 - Components

2.1 The standard sensors shall be probes. The PHLR hydrocarbon probe shall be less than 1⅛" in diameter and less than 2" long for use with organic liquids. The hydrocarbon probe shall reset after the elements are cleaned and/or replaced.The PWS conductivity probe shall be of solid state construction and corrosion resistant housing. The conductivity probes shall reset after liquids are removed from the probe. Lead wires shall consist of 24 AWG shielded conductor with color coded insulation.

2.2 The use of other probes such as float switches, ground water monitoring or other devices shall use a dry contact to indicate an alarm condition. Float switch probes shall be resettable after fluids are removed and shall use material of construction suitable for liquids to be sensed for corrosion resistance.

2.3 The monitoring panel shall be modular in design and accept up to sixty-four (64) probes and sixteen (16) programmable alarm relays. The LCD shall provide indication of the system's status. When a probe alarms, the type of alarm (active, short or break) and the probe number shall be indicated. Using the membrane keypad the operator shall be able to program the system and review the history archive. An RS-232 interface port shall be available for use in remote monitoring of the unit using ASCII commands. A Modbus RTU interface shall be available for interface to a BMS system. The enclosure shall be NEMA 4X.

Part 3 - Safety

3.1 The unit must be UL Listed and provide connections for intrinsically safe sensor circuits for use in Class I, Division 1, Groups C & D hazardous locations (where required).

LiquidWatch® Monitoring Units have been engineered to meet a broad range of customer needs. The system can be configured with up to sixty-four (64) probes and sixteen (16) alarm relays. The modular design allows for meeting current needs while allowing for future expansion of the system.

LiquidWatch employs a two (2) line, twenty (20) character backlit LCD with a membrane keypad for operator interface. The probe circuits are supervised and provide alarms for probe active, short and break conditions. Probes can be programmed on a leak alarm to operate one of sixteen (16) optional relays for remote alarm indication or operation of a shut down procedure.

LiquidWatch Monitoring Units are equipped with normally energized 10 A, 240 VAC, DPDT relays: 1 common alarm relay and up to sixteen (16) programmable relays (in modules of four). The alarm console can be located up to 20,000 feet (6000m) from the probes. The probe modules (8 probes per module) can be mounted remotely to reduce wiring costs.

The patented PHLR probe for LiquidWatch is solid-state design and responds in seconds after contact with organic liquids. Hydrocarbon fumes or vapors have no effect, thereby virtually eliminating false alarms.

The LiquidWatch Monitoring Unit can also monitor any switch (float switch, thermostat, high level switch, dry contact, etc.), using the optional probe adapter.

FluidWatch® *Leak Detection Systems*

PRODUCT FEATURES

- Senses water based liquids within seconds of contact
- Sensitivity from several inches to several feet
- Durable sensor cable
- Available in sensor lengths: 10 ft to 100 ft
- Comes in a kit, complete with (if required) jumper cable, sensor cable, cable clips and cable tags
- 120 VAC, 240 VAC or 24 VDC input power

The FluidWatch® Leak Detection Monitoring Unit is engineered to monitor small areas for water leaks. Typical applications include unmanned equipment rooms, small raised floor areas and small tanks. The system continuously monitors the capacitance of the sensor cable and detects changes. Seconds after the coaxial sensor cable contacts water or water-based liquids, the unit enters into alarm. The sensor cable can be quickly dried in place after the leak is cleaned up and the system is back online.

FluidWatch (115/240 volt version) uses an LED "traffic light" display to indicate status: Green - normal, Yellow - break and Red - leak. An audible alarm and two (2) 250 VAC, 10 A, SPDT relays activate when either a leak or break occurs. There are two (2) operator buttons, one to test the system and the other to silence the alarm.

Internal jumpers are used to enable alarm silencing, to select cable sensitivity and to enable automatic silencing upon return of the system to normal conditions.

FluidWatch II System is a low voltage (10-30 V AC/DC) with the status display on the circuit board and three relays (two leak and one fault) for use with CRAC/CRAH units and other applications not requiring an alarm horn.

Specifications

Part 1 - System

1.1 FluidWatch Leak Detection System shall consist of an electronic monitoring unit, coaxial water-sensing cable, interconnecting jumper cable, cable clamps and identification tags. All cable connectors shall be factory installed.

The system supplier shall have at least ten (10) years experience in the manufacture of the leak detection systems.

Part 2 - Components

2.1 The monitoring unit shall be able to monitor a length of sensing cable. Three (3) LED's shall be visible on the door of the unit indicating System Monitoring (Green), Leak Detection (red) or Cable Break (Yellow). The unit shall have an audible alarm and be equipped with two (2) normally energiized SPDT Form 1C relays having contacts rated for 10 A continuous at 250 VAC. The audible alarm and relays shall be activated in the event of a leak or a continuity fault.

The system shall have two (2) external switches for operator input, test and alarm silence. Internal switches shall select cable sensitivity (high, medium and low), enable the silence button, enable automatic silence when the cable dries and select 120/240 VAC operating voltage.

The monitoring unit shall be powered by [120 VAC] [240 VAC] [24 VDC]. It shall be housed in a modified NEMA 4X nonmetallic enclosure with nominal dimensions or 7" x 7" x3".

2.2 The sensor shall be a coaxial cable consisting of an insulated center conductor, water permeable dielectric core and outer braid conductor.

The sensing cable shall have the ability to detect the presence of water at any point along the cable's length. The cable shall be easily field repairable, flexible and carry less than six (6) VAC under normal operating conditions.

The sensing cable shall be available in lengths of 50, 75 and 100 feet or special lengths as required up to 100 feet. All sensing cable shall be supplied with connectors.

2.3 The system shall include one monitoring unit, one length of sensing cable, one jumper cable to connect the sensing cable to the monitoring unit, one cable clamp for every five (5) feet of sensing and jumper cable and five (5) cable tags.

Part 3 - Installation

3.1 All FluidWatch system components shall be installed in accordance with manufacturer's installation instructions.

3.2 The monitoring unit shall be installed and powered in accordance with NEC and local code requirements.

PAL-AT® Specification Guide

The leak detection/location system shall consist of microprocessor based monitoring unit(s) capable of continuous monitoring of a sensor string for leaks/faults. The unit shall have a sensing range of (3,000 ft) [900m], (7,500 ft) [2300m] per cable. The alarm unit(s) shall operate on the principle of pulsed energy reflection and be capable of mapping the entire length of the sensor cable and storing the digitized system map in non-volatile memory. The alarm unit(s) shall provide continuous indications that the sensor cable is being monitored.

After the detection of a minor leak, the leak detection/location system shall reset itself and continue to monitor the entire sensing string for a growing leak or an additional leaks(s) even if they are smaller than the leak(s) previously acknowledged. The system shall be capable of accounting for minor installation irregularities, static moisture and puddles (such as condensation) with no loss in accuracy or sensitivity. The system shall locate the point of origin of the first leak or fault within ± 0.3% of the sensor string length or ± 6 feet, whichever is greater for water-based liquids and ± 0.6% of the sensor string length or ± 6 feet, whichever is greater for hydrocarbon based liquids. The monitoring unit shall report and record, to non-volatile memory, the type of fault, distance, date and time of an alarm. The alarm queue will require clearing by an operator after alarms are detected to reset from the alarm mode.

The system manufacturer shall have at least fifteen (15) years of experience with leak detection/location sensor cable technology and provide a factory trained representative at on-site meetings for pre-construction sensor/electronics installation, commissioning and owner training.

The system shall have multi-level security passwords for access to operating functions with recording of all password entries to non-volatile memory.

The alarm unit(s) shall be enclosed in a NEMA 12 enclosure and have a two line by forty character display providing status and alarm data. The monitoring unit(s) shall have a factory mounted alarm horn. The unit shall be UL listed and CE compliant. The optional Zener Barrier Panel will provide connections for intrinsically safe sensor circuits for use in Class I, Division 1, Groups C and D/Zone 0, Group IIB hazardous locations.

The system shall be tested and found to comply with the limits for a Class A digital device, pursuant to Part 15 of the FCC rules and so labeled.

The system shall be evaluated by an independent third party according to the Third Party Procedures developed according to the U.S. EPA's "Standard Test Procedure for Evaluating Leak Detection Methods: Liquid-Phase Out-of-Tank Product Detectors".

Ability to locate a leak shall not depend on battery backed-up functions. In the event of power failure, system conditions and parameters shall be stored in non-volatile memory allowing the unit(s) to automatically resume monitoring, without resetting, upon restoration of power.

The monitoring unit(s) power requirements shall be 110/240 VAC, 50 VA, 50/60 Hz, single phase. Monitoring units shall be equipped with RS-232, RS-485 and Ethernet communication ports and a minimum of three SPDT output relays, rated for 250 VAC, 10 amps.

The sensor cable, connectors, (probes) and jumpers shall be supplied by the manufacturer of the monitoring unit(s). The cable sensing principle shall provide for continuous monitoring while short lengths of the cable are in contact with liquids, without altering the systems sensitivity and/or accuracy.

Software will be provided that allows remote or on-site interface through communication ports for user interface, troubleshooting and diagnostics. Software shall have the ability to interface with the PAL-AT monitoring units and retrieve each of the stored reference maps and current condition TDR traces. The software shall be able to have a digital map of the layout of the system and indicate on the map the location of alarms. The software shall have SMS capability to send text messages with drawings attached, facilitating the users response to alarms.

PermAlert™
Division of Perma-Pipe, Inc.
6410 West Howard Street
Niles, Illinois 60714
Phone 847-966-2190
Fax 847-470-1204
www.permalert.com

The information contained in this document is subject to change without notice. PermAlert believes the information contained herein to be reliable, but makes no representations as to its accuracy or completeness.

PermAlert, Division of Perma-Pipe, Inc., sole and exclusive warranty is as stated in the Standard Terms and Conditions of Sale for these products. In no event will PermAlert be liable for any indirect, incidental, or consequential damages.

Halar is a Registered Trademark of Ausimont USA, Inc.

Windows is a Trademark of Microsoft Corporation.

PAL-AT, PALCOM, LiquidWatch and FluidWatch are registered trademarks of PERMA-PIPE, Inc.

PAL (01/17 3M PG) Printed in the U.S.A. ©2017 PERMA-PIPE, Inc.

PermAlert™
Division of Perma-Pipe, Inc.

PAL-AT® ~~AT30C~~/AT75C/~~AT30K~~
Leak Detection System
Product Data

PRODUCT FEATURES / BENEFITS

- Locates multiple leaks without loss of accuracy or sensitivity
- Detects growing leaks
- Locates breaks and shorts to reduce downtime
- Displays location of leaks up to location of breaks/shorts
- Ethernet and RS-232/RS-485 serial ports
- Able to commission system with limited initial lengths of wet cable
- Not susceptible to dust/dirt contamination of the sensor string
- Modbus TCP, RTU, and RTU over TCP protocols
- Optional BACnet IP gateway available
- FM Approved for FM 7745 - Diesel Leak Detector
- Zener barrier panel (ZBP) provides intrinsically safe sensor cable output circuits for hazardous locations:
  Class I, Division 1, Groups C & D
  Zone 0, Group IIB

PRINCIPLE OF OPERATION

PAL-AT®'s TDR pulse echo technology operates similar to radar. Thousands of times each minute, safe energy pulses are sent out on the sensor cables. As these energy pulses travel down the cable, reflections are returned to the monitoring unit and a "map" of the reflected energy from the cable is stored in memory. The presence of liquids on the sensor cable, in sufficient quantities to "wet" the cable, will alter its electrical properties. This alteration will cause a change of the reflection at that location. When PAL-AT recognizes a change, it enters into alarm mode and automatically creates a new "map". This becomes the base line for the system, allowing PAL-AT to continue monitoring the cable for growing leaks, new leaks, breaks, shorts and/or faults. The alarms are stored in an alarm queue to be acknowledged by an authorized user.

SECURITY SYSTEM

PAL-AT requires a password entry before alarms can be acknowledged or system information can be changed. This feature limits access to only those employees who have been authorized to perform the advanced functions.

SYSTEM ARCHIVES

Date and time history of significant events including power failure and cable leak/fault/break/short are stored in nonvolatile memory providing a documented record of system alarms.

OUTPUT RELAYS

PAL-AT has several dry contact output relays, rated for 10 A @ 250 VAC. A fault relay monitors for loss of power. A common alarm relay is activated when any fault is detected on any cable. It is reset when the audible alarm is silenced. A cable relay can be programmed to activate when any fault occurs or only when leaks are detected. The relay will stay active until the alarm is acknowledged.

COMMUNICATION

PAL-AT has an Ethernet port and two serial ports, RS-485 and RS-232, to interface with PALCOM® 10 w/GLS software or custom software. Refer to the Communication Options Data Sheet for detailed information.

MODBUS

PAL-AT communicates via Modbus TCP and Modbus RTU to pass system and cable status data to a Modbus host. It also enables the host to acknowledge the alarm queue remotely.

Model No.	Part No.	Cable Capacity	Maximum Cable Range Feet	(Meters)
~~AT30C~~	~~8028300~~	~~1~~	~~3000~~	~~(900)~~
AT75C	8028310	1	7500	(2300)
~~AT30K~~	~~8028320~~	~~4~~	~~7500~~	~~(2300)~~

*Refer to Sensor Cables Product Data for Technical details

CE

FM APPROVED

c UL us LISTED
Leak Detection System
4ER7

PermAlert™
Division of Perma-Pipe, Inc.

PAL-AT® AT30C/AT75C/AT30K
Zener Barrier Panel
Product Data

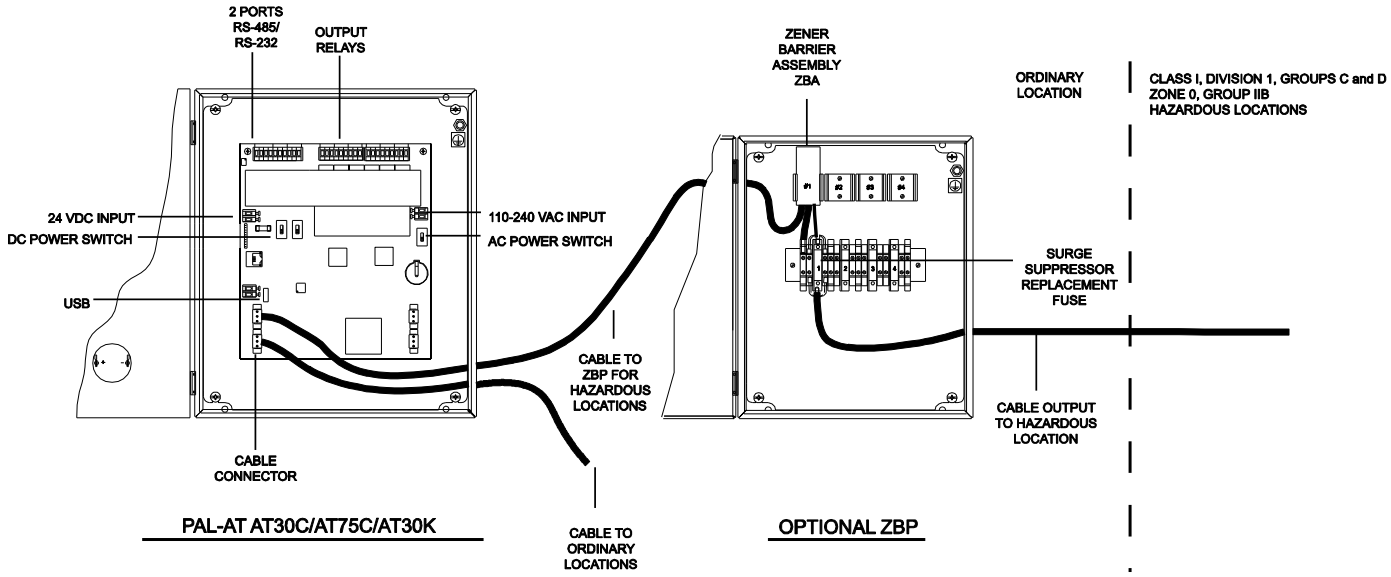

HAZARDOUS AREAS

An optional **Zener Barrier Panel (ZBP)** is available if PAL-AT cables or probes are installed in Class I, Division 1, Groups C & D / Zone 0, Group IIB hazardous locations. The ZBP includes one **Zener Barrier Assembly (ZBA)**. One ZBA is required for each cable sensing string. The ZBP is expandable to hold up to four ZBAs.

FM 7745 Approval

The PAL-AT system has been certified by FM Approvals as a diesel leak detector per FM 7745. **Contact PermAlert for specific FM requirements**.

SURGE SUPPRESSOR

Each ZBA also functions as a surge suppressor to reduce damage to the PAL-AT from external voltage surges. It is used when cable locations are subject to frequent voltage surges or nearby lightning strikes. It has a replaceable fuse to get the system back on-line quickly. Each ZBA protects one cable string.

Model Number	Part Number	Description
ZBP	8028115	Zener Barrier Panel
ZBA	8028110	Zener Barrier Assembly
	8027884	FM Approval Modification

92P1

TECHNICAL DATA:

PAL-AT

- Dimensions: 13.75" x 11.81" x 4.00" (350 mm x 300 mm x 102 mm) Type 12 (IP52)
- Power: 110-240 VAC, 50/60 Hz, 0.3 A/50 VA 24 VDC, 1 A/24 VA
- Weight: 14.6 lb (6.6 kg)
- Operating Range:-4°F to 122°F (-20°C to 50°C)

ALARM OUTPUTS:

- Fault Conditions: Leak, Break, Short or Probe Activation
- Distance to Fault Location
- Date and Time of Fault
- Activation of Output Relays
- Red LED Optical Alarm
- BMS Interface
- Modbus TCP/RTU Output
- BACnet IP gateway available

ZBP:

- Dimensions: 11.81" x 9.84" x 4.00" (300 mm x 250 mm x 102 mm) Type 4, 12 (IP66)
- Weight: 12.0 lb (5.4 kg)
- Operating Range:-4°F to 140°F (-20°C to 60°C)

The information contained in this document is subject to change without notice. PermAlert, a Division of PERMA-PIPE, Inc., believes the information contained herein to be reliable, but makes no representations as to accuracy or completeness. PermAlert offers a sole and exclusive warranty as is stated in the Standard Terms and Conditions of Sale for these products. In no event will PermAlert be liable for any indirect, incidental or consequential damages.

PermAlert • 6410 W. Howard St. • Niles, IL 60714-3302
Ph: 847 966-2190 • Fax 847 470-1204 • www.permalert.com

© 2017 PERMA-PIPE, Inc. • All Rights Reserved • *Printed in the U.S.A.* • (02/17)

PermAlert™
Division of Perma-Pipe, Inc.

Sensor Cables
Product Data

The PAL-AT® family of sensor cables are able to meet the specific requirements of a wide variety of applications and environments including subfloors, containment pipe systems, direct burial and foam insulated pipes. The sensor cables offer the leak detection designer flexibility and choice in selecting the proper cable for the desired system sensitivity.

All **PAL-AT** cables and connectors are easily spliced or repaired in the field to minimize downtime and repair cost.

PAL-AT AGW-Gold and AGT-Gold sensor cables have the ability to detect both water-based and hydrocarbon liquids. This reduces the number of sensor cables required in many applications. Each of these PAL-AT sensor cables can be dried and reused after a water-based or volatile hydrocarbon leak has been cleaned up. These cables have no exposed metal and are designed for corrosive chemical applications. Each individual strand of braid wire is coated with a high-temperature, corrosion-resistant polymer and the length of the cable is covered with a fluoropolymer overbraid. Because there is no exposed metal, the Gold cables eliminate the need for special isolation precautions in cathodic-protected pipe applications.

PAL-AT TFH-Gold hydrocarbon sensor cable uses a hydrocarbon permeable core to detect hydrocarbon liquids while ignoring water-based liquids. In most cases, the sensor cable must be replaced after exposure to hydrocarbons.

ATP

ATP is a cable designed to monitor pre-fabricated polyurethane insulated pipes. The twisted pair type sensor cable will detect water-based liquids. The cable is factory installed in the insulation of each pipe length. The sections of ATP cable are easily spliced together as the pipe is assembled in the field.

Liquids Detected with TFH-Gold < 5 Minutes

Liquid (tested at 70°F)		
Gasoline	Alcohol	Acetone
Diesel Fuel	Naptha	Crude Oil**
Kerosene	MEK	Transformer
Jet Fuel	Xylene	Oil**

**Contact PermAlert for details on these and other liquids.

AGW-Gold

AGW-Gold is a quick drying cable that is chemically resistant and designed to detect highly corrosive liquid leaks such as acids, bases and solvents. Typical applications are secondary contained pipes in chemical installations, subfloors of clean room manufacturing areas, computer rooms and high temperature applications such as steam pipe containment systems. The cable has passed UL 910 for Plenum Rating.

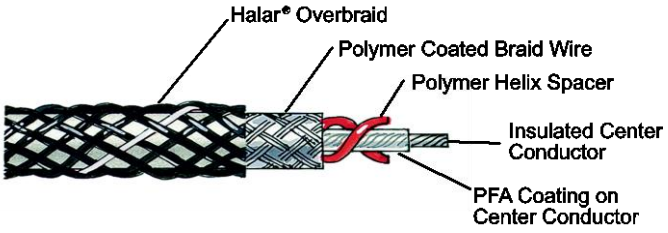

AGT-Gold

AGT-Gold is a wicking cable that is chemically resistant and designed to detect highly corrosive acid, base, and solvent leaks. Typical applications are clean rooms, subfloors, aboveground single-wall pipes and equipment applications. AGT-Gold should be installed in temperature and humidity controlled environments. This cable requires more drying time than AGW-Gold.

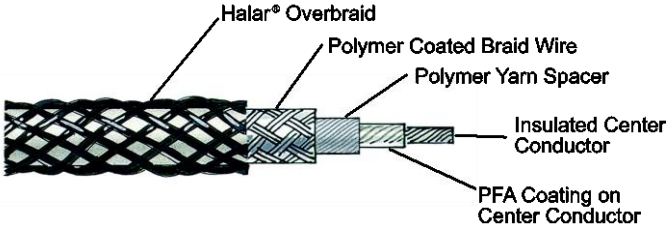

TFH-Gold

TFH-Gold is a wicking cable specifically designed to detect only hydrocarbons. This cable may be direct buried in slotted PVC pipe, or screen pipe, to a maximum depth of 20 ft (6 m) to locate fuel leaks while ignoring the presence of water. This is ideal for monitoring single-wall pipes and tanks. The cable is suitable for applications where hydrogen sulfide or other corrosive gases may be encountered, such as refineries and oil fields.

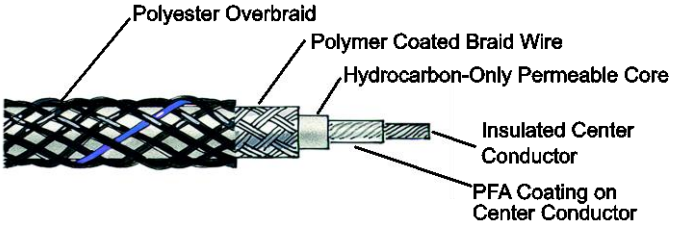

*Halar® is a registered trademark of Ausimont USA, Inc.

Sensitivity is the length of wet cable that is required to activate the PAL-AT under standard sensitivity settings. The length required for quick-drying AGW-Gold refers to the submerged length of the cable. ~~Wicking cables AGT-Gold and TFH-Gold will quickly draw a liquid into the cable through capillary action when it is in contact with a 1/16" (2 mm) film of liquid. The length of wet cable required for wicking cables is the saturated length of cable. For example, if a few inches of AGT-Gold cable contact a film of water at 5,000 ft (1,500 m), in less than two minutes, the cable will be saturated sufficiently and the PAL-AT will go into alarm.~~ The PAL-AT sensitivity can be adjusted.

Sensitivity and Accuracy

Effective Length ft(m)		<2,500 (750)	<5,000 (1500)	<7,500 (2300)
Sensitivity				
AGW-Gold, ~~AGT-Gold~~	Water	3 (1)	3 (1)	3 (1)
AGW-Gold, ~~AGT-Gold~~	Hydrocarbon	6 (2)	15 (4)	23 (7)
~~TFH~~	~~Hydrocarbon~~	~~6 (2)~~	~~18 (5)~~	~~30 (9)~~
~~ATP~~	~~Water~~	~~3 (1)~~	~~6 (2)~~	~~N/A~~
Accuracy ft(m)				
AGW-Gold, ~~AGT-Gold~~	Water	±6 (2)	±12 (4)	±18 (5)
AGW-Gold, ~~AGT-Gold~~	Hydrocarbon	±6 (2)	±26 (8)	±40 (12)
~~TFH-Gold, TFH~~	~~Hydrocarbon~~	~~±6 (2)~~	~~±30 (9)~~	~~±48 (15)~~
~~ATP~~	~~Water~~	~~±10 (3)~~	~~±30 (9)~~	~~N/A~~

Cable Type	**Part No.**	**Temp. (max.) ◦F (◦C)**	**O.D. In (mm)**	**Liquids Detected**
AGW-Gold	8017705	400 (205)	.31 (8.0)	water-based & hydrocarbon
~~AGT-Gold~~	~~8017700~~	~~250 (120)~~	~~.31 (8.0)~~	~~water-based & hydrocarbon~~
~~TFH-Gold~~	~~8017640~~	~~250 (120)~~	~~.31 (8.0)~~	~~hydrocarbon only~~
~~TFH~~	~~8017635~~	~~250 (120)~~	~~.31 (8.0)~~	~~hydrocarbon only~~
~~ATP~~	~~8017732~~	~~250 (120)~~	~~.20 (5.0)~~	~~water-based only~~

NOTES:

- Effective length is the total length of sensor cable, and effective length of jumper cable and probes **(see Jumper Cable Data Sheet)** that are connected together to form the "sensing string". For cables longer than 5,000 ft, an additional effective length of 50 ft is added for each connector exceeding 1 connector per 500 ft of cable.
- The actual length or the effective length of a sensor string cannot exceed the maximum cable range for the selected Leak Detection System.
- Temperatures shown are continuous operating exposures.

SENSOR CABLE SPECIFICATIONS

AGW-Gold

Sensor cable shall be of fluoropolymer and polymer coated wire construction with no exposed metal parts. Cable shall detect water-based, chemical and hydrocarbon liquids. The sensor cable can be flushed and dried in-place and will not require replacement after a leak event of any volatile liquid. The cable shall have a breaking strength of at least 100 lb (45 kg) and shall be resistant to corrosion, abrasion and most chemicals tested in accordance with exposure procedures in ASTM D-543.

~~AGT-Gold~~

~~Sensor cable shall be of fluoropolymer and polymer coated wire construction with no exposed metal parts. Sensor cable shall detect accumulations at a shallow depth of 1/16" (1.5 mm) and be resistant to most acids, bases and solvents and be capable of being flushed and dried in place. The cable will not require replacement after a leak event of any compatible and/or volatile liquid. The cable shall have a breaking strength of at least 100 lb (45 kg) and shall be resistant to corrosion, abrasion and most chemicals tested in accordance with exposure procedures in ASTM D-543.~~

~~TFH-Gold~~

~~Sensor cable shall detect only hydrocarbons while ignoring water and water-based liquids. The cable is designed for direct burial in slotted PVC pipe, or screen pipe, to a maximum depth of 20 ft (6 m) and capable of providing a response time of not more than four minutes after contact with most hydrocarbon liquids. The sensor cable is not reusable after exposure to hydrocarbons.~~

~~ATP~~

~~Sensor cable shall be a twisted-pair construction. The cable insulation shall be irradiated cross-linked PE. The cable shall be designed to detect water-based liquids and be factory installed in polyurethane foam insulation.~~

ATP COMPONENTS

Part No.	**Description**
8017732	ATP Sensor Cable
8027800	ATP Crimp Splice Kit
8068308	ATP Crimp Tool

The information contained in this document is subject to change without notice. PermAlert, a Division of PERMA-PIPE, Inc., believes the information contained herein to be reliable, but makes no representations as to accuracy or completeness. PermAlert offers a sole and exclusive warranty as is stated in the Standard Terms and Conditions of Sale for these products. In no event will PermAlert be liable for any indirect, incidental or consequential damages.

PermAlert • 6410 W. Howard St. • Niles, IL 60714-3302
Ph: 847 966-2190 • Fax 847 470-1204 • www.permalert.com

© 2017 PERMA-PIPE, Inc. • All Rights Reserved • Printed in the U.S.A. • (06/17)

PAL-AT®

INSTALLATION MANUAL

MODELS AT30C, AT75C & AT30K

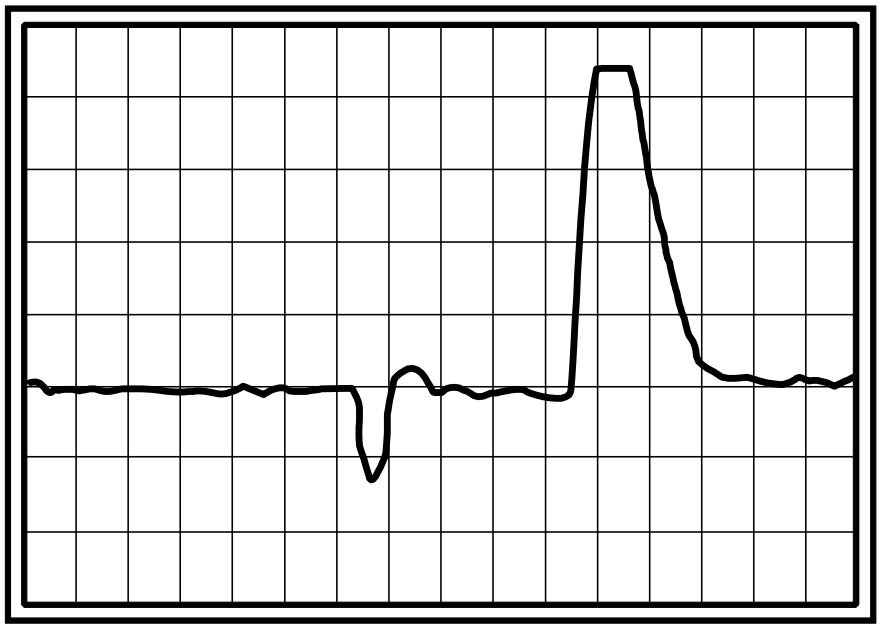

PermAlert™

Division of Perma-Pipe, Inc.

Notice

The information contained in this manual, including but not limited to any product specifications, is subject to change without notice.

PERMALERT (PERMALERT), A DIVISION OF PERMA-PIPE, INC., PROVIDES NO WARRANTY WITH REGARD TO THIS MANUAL OR ANY OTHER INFORMATION CONTAINED HEREIN AND HEREBY EXPRESSLY DISCLAIMS ANY WARRANTIES, INCLUDING IMPLIED WARRANTIES, OF MERCHANTABILITY OR FITNESS FOR ANY PARTICULAR PURPOSE WITH REGARD TO ANY OF THE FOREGOING. PERMALERT ASSUMES NO LIABILITY FOR ANY DAMAGES INCURRED DIRECTLY OR INDIRECTLY FROM ANY TECHNICAL OR TYPOGRAPHICAL ERRORS OR OMISSIONS CONTAINED HEREIN OR FOR DISCREPANCIES BETWEEN THE PRODUCT AND THE MANUAL. IN NO EVENT SHALL PERMALERT BE LIABLE FOR ANY INCIDENTAL, CONSEQUENTIAL, SPECIAL, OR EXEMPLARY DAMAGES, WHETHER BASED ON TORT, CONTACT OR OTHERWISE, ARISING OUT OF OR IN CONNECTION WITH THIS MANUAL OR ANY OTHER INFORMATION CONTAINED HEREIN OR THE USE THEREOF.

Caution --This manual may not be up-to-date.

Please check the PermAlert website, www.permalert.com, for the latest revision of this manual.

The manual is typically revised at least once a year. The revision date is on the back cover.

Contact techsupport@permalert.com for technical assistance with the PAL-AT system.

Table of Contents

Safety Information 4

1 Introduction 5

1.1 General Description 5
1.2 Applications 5
1.3 Receiving and Handling Precautions 5
1.4 Materials and Equipment Normally Supplied by PermAlert 5
1.5 Materials and Equipment Normally Supplied by Installing Contractor 6

2 PAL-AT Alarm/Locator Panel 7

2.1 Alarm/Locator Panel Installation 7
2.2 Terminals 8
2.3 Power Connection 8
2.4 Audible Alarm Wiring 8
2.5 Control Relays 8
2.6 Communications 11
2.6.1 Port 1 - RS-485/RS-232 11
2.6.2 Port 2 - RS-232 11
2.6.3 Ethernet 11
2.7 Replaceable Parts 11
2.7.1 Battery 11
2.7.2 24 VDC Fuse 12
2.8 Contrast Adjustment 12
2.9 Impedance Jumper Setting 12
2.10 UL 12
2.11 FCC and CE Compliance Requirements 12

3 Zener Barrier Panel 13

3.1 Introduction 13
3.2 Panel Installation 13
3.2 Panel Wiring 15
3.3 Zener Barrier Assembly (ZBA) Installation 15
3.4 Fuse Protection 15
3.5 Allowable Cables and Probes 15

4 Jumper Cable and Junction Box Installation 17

4.1 Jumper Cable 17
4.2 Calibration Points 18

4.3 Junction Boxes 18

5 Cable Installation in Secondary Contained Piping 19

5.1 General 19
5.2 Pull Points 20
5.3 Cable Splices 22
5.3.1 Factory Installed Fiber Pull Rope to Continuous Pull Wire Rope Splice 22
5.3.2 Wire Rope to Wire Rope Splice 23
5.3.3 Wire Rope to Wire Rope Splice (alternate) 24
5.3.4 Wire Rope to Leak Detection Cables 25
5.4 Installation of the Continuous Pull Rope 27
5.5 Installing Sensor and Jumper Cables 29
5.6 Air Testing 32

6 Installation of Direct Buried Sensor Cable 33

6.1 General 33
6.2 Installing the Sensor Cable 34
6.3 Above Ground Storage Tanks 37

7 Cable Installation for Raised Floor Areas 39

7.1 General 39
7.2 Install the Sensor Cable 39
7.3 Locator Chart 40

8 Cable Connectors 41

8.1 General 41
8.2 Cable Connector Installation 41
8.2.1 CAGOLD and CATFH Connectors for Sensor Cables AGW-Gold, AGT-Gold, TFH-Gold and TFH 41
8.2.2 CAJMP Connectors for Jumper Cables JMP-U/-UD 44
8.2.3 CAJPP Connectors for Jumper Cables JPP and JMP 46
8.2.4 CAGOLD Connector for ATP Cable 47
8.3 Shrink Tubing 49
8.3.1 Cable Type TFH 49
8.3.2 Cable Types AGW-Gold, AGT-Gold and TFH-Gold 50
8.3.3 Cable Types JMP-U/-UD, JPP and JMP 51
8.4 Cable and Connector Testing Procedures 51
8.4.1 General 51
8.4.2 Continuity Test 51
8.4.3 Alternative System Test 52
8.4.4 Insulation Test 52

8.5 Cable Connections to Panels 52
8.5.1 General 52
8.5.2 Ferrule Installation in PAL-AT Panel 52
8.5.3 Ferrule Installation in Zener Barrier Panel 54
8.5.4 ATP Cable Connection at PAL-AT 56

9 Probes 57

9.1 UL Requirements 57
9.2 Probe Integrator Selection 57
9.3 Probe Installation 57
9.4 PHLR Hydrocarbon Probe 59
9.4.1 Cleaning Sensor Elements Procedure 60
9.4.2 Testing the Probe 61
9.4.3 Troubleshooting 61
9.4.4 Calibrating the Probe 61
9.5 Typical Installations 62
9.6 Probe Tests 67

10 ATP Cable in Polyurethane Foam Insulation 69

10.1 General 69
10.2 Pipe Installation Precautions 69
10.3 System Configuration 69
10.4 Calibration Points 69
10.5 ATP Cable and Connector Testing Procedures 69
10.5.1 Continuity Test 70
10.5.2 Insulation Test 70
10.5.3 Insulation Test with Wet Cloth 71
10.6 Start of Run 71
10.7 ATP Cable Splices 72
10.8 ATP Cable at Tee Connections 74
10.9 End of Run Termination 75
10.10 Requirements for Field Joints with Wind-Down End Seals 76

Appendix A – Special Instructions 77

A.1 Supply Power 77
A.2 Control Drawing 77
A.3 Zener Barrier Panel (ZBP) 77
A.4 Probe Integrator 77
A.5 Probe Integrator Static Precautions 77
A.6 ZBP Enclosure Fittings 78

WARRANTY 79

Safety Information

Please Read This Installation Manual

Please take the time to read this installation manual carefully. It will help you set up and operate your system properly. **Failure to follow these instructions may impair the safety of the equipment**. Please save this installation manual for future reference.

For your safety

Caution: *To reduce the risk of fire or electric shock, do not expose the PAL-AT to rain or moisture.*

CAUTION: TO REDUCE THE RISK OF ELECTRIC SHOCK,
TURN OFF POWER BEFORE OPENING ENCLOSURE DOOR.
REFER ALL SERVICING TO QUALIFIED PERSONNEL

This symbol alerts the user to the presence of uninsulated, dangerous voltage within the system enclosure that may be of sufficient magnitude to constitute a risk of electric shock.

This symbol alerts the user to the presence of important operating and maintenance instructions in this manual.

Approvals and Certifications

Regulatory Compliance Statements

FCC Class A Notice

This device complies with part 15 of the FCC Rules. Operation is subject to the following two conditions.

1. This device may not cause harmful interference, and
2. This device must accept any interference received, including interference that may cause undesired operation

NOTE: This equipment has been tested and found to comply with the limits for a Class A digital device, pursuant to Part 15 of the FCC Rules. These limits are designed to provide reasonable protection against harmful interference when the equipment is operated in a commercial environment. This equipment generates, uses, and can radiate radio frequency energy and, if not installed and used in accordance with this instruction manual, may cause harmful interference to radio communications.

Operation of this equipment in a residential area is likely to cause harmful interference in which case the user will be required to correct the interference at his own expense.

Changes or modifications not expressly approved by the party responsible for compliance could void the user's authority to operate the equipment.

The party responsible for product compliance:

Perma-Pipe, Inc.
6410 W. Howard St.
Niles, IL 60714

1 Introduction

1.1 General Description

This PAL-AT® Installation Manual is intended for use as a general installation guide for PAL-AT alarm/locator panels, sensor cable, cable connectors, and probes. Users (installers) should independently evaluate the suitability of this information and PermAlert's products for their application and specific installation. If you receive a PermAlert product not described in this manual, contact PermAlert for the appropriate instructions. PermAlert is a division of Perma-Pipe, Inc. Refer to the PermAlert website, permalert.com, for the latest revision of manuals and product data sheets.

1.2 Applications

The PAL-AT system consists of an electronic microprocessor-based alarm/locator panel that monitors sensor cables and/or probes. The sensor cable may be installed in many applications including: secondary contained piping; directly in the ground adjacent to fuel pipes or tanks; computer room subfloors; cleanroom subfloors, or any area where liquids need to be detected. There are several PAL-AT models available including:

AT30C: Monitors 1 cable up to 3,000 ft [900 m].

AT75C: Monitors 1 cable up to 7,500 ft [2300 m].

AT30K: Monitors 4 cables each up to 7,500 ft [2300 m].

Applications monitoring cables in hazardous locations must use a Zener Barrier Panel (see section 3).

1.3 Receiving and Handling Precautions

The following general precautions should be observed:

1. **Do not use substitute materials or short cut recommended procedures**. Understanding and following this guide is essential to avoid installation problems.
2. Collect the needed quantities of all materials well in advance of scheduled work.
3. Check the packing list against received items. **Report immediately any shortages or damaged materials to the delivering carrier.**
4. All cable must be tested immediately upon receipt following the cable test procedures contained in this manual. Report immediately to PermAlert any cables that fail the tests. Failure to report within ten workdays of receipt of goods shall waive the purchaser's right to file a warranty claim.
5. **The recommended minimum bend radius for all sensor and jumper cables is 1.5" [38mm].**
6. Care must be taken to store all PAL-AT components in a dry and protected area at all times. Electronic alarm/locator panels and sensor cable should be wrapped and sealed with plastic.
7. System drawings, provided by the designer, should indicate the extent, general location, and arrangement of leak detection equipment, cable, and probes. The contractor (installer) should become familiar with all details of the installation before proceeding.
8. Electrical work should be performed by a qualified electrician.

1.4 Materials and Equipment Normally Supplied by PermAlert

Each system may include the following items as quoted:

1. Leak detection/location alarm panel
2. Leak sensor cable
3. Jumper cable
4. Cable connector assemblies
5. Adhesive backed cable mounts (CMA) furnished for attachment of sensor cable to flat surfaces
6. Probe assembly, including a PT10 Probe Integrator installed in a NEMA 4X [IP66] junction box with 60' of jumper cable and one cable connector assembly

7. Watertight junction boxes conforming to NEMA 4X [IP66].

Maximum No. of Cable Connectors in Enclosure	Enclosure Dimensions
1	6" x 6" x 4" [150 mm x 150 mm x 100 mm]
2	8" x 6" x 4" [200 mm x 150 mm x 100 mm]
4	10" x 8" x 4" [250 mm x 200 mm x 100 mm]

8. Watertight cord grips
9. Shrink tubing for cable connectors
10. Non-corrosive RTV adhesive/sealant for cable connectors

1.5 Materials and Equipment Normally Supplied by Installing Contractor

Each system may require the installing contractor to supply the following items:

1. Pull rope, 1/8" [3 mm] diameter, 7 strands, steel wire rope aircraft cable. For installation of cable in fiberglass or other plastic piping systems, use plastic coated (non-vinyl) wire rope. Provide pull rope in quantities equal to 120% of system length. (Included with Perma-Pipe piping systems)
2. Cable spool rack or stand
3. PVC electrical tape
4. Miscellaneous pipe nipples, unions, and fittings, as required to provide watertight jumper cable connections to sensor cable.
5. 1" rigid or liquid-tight flexible electrical conduit, as required, for installation of jumper cable within manholes, pits, and buildings. Use 1" conduit hub, OZ Gedney CH-100, or equal, connection to junction boxes.
6. Electrical conduit, junction boxes, and wiring, as required.
7. Ohmmeter for testing jumper cables and sensor cables.
8. 1000-volt megger for testing ATP sensor cable.
9. Hole saw or knockout punch.
10. Construction adhesive mastic for attachment of cable mounts to unsealed concrete surfaces
11. Hot air gun for shrink tube application on cable connector assemblies

2 PAL-AT Alarm/Locator Panel

2.1 Alarm/Locator Panel Installation

The PAL-AT panel is designed to be permanently mounted indoors in a dry area. The enclosure is rated Type 12 [IP52]**.** It must not be located in direct sunlight to prevent excessive heat buildup. **In all installations, the ambient temperature surrounding the PAL-AT panel must be within the limits below.** The equipment is designed to be safe in the following range of environmental conditions:

a) Indoor use;
b) Altitude up to 6,560 ft [2000 m];
c) Temperature -4°F [-20°C] to 122°F [50°C];
d) Maximum relative humidity 95%;
e) Pollution degree 2.

Warning: Do not mount the PAL-AT panel in a hazardous location. The panel must be in an ordinary location even though sensor cables may be located in hazardous locations. Refer to the Zener Barrier Panel section of this manual.

Mount the PAL-AT panel securely to a wall, using ¼" [M6] hardware in the 4 holes on the back of the panel (see figure 2-1). If it is mounted to a typical ½" plasterboard wall, use ¼" x 1 ½" [M6 x 40mm] lag screws to secure it to the studs (nominal 2" x 4" [50mm x 100mm]). The panel can also be mounted to steel mounting channel struts using ¼" [M6] machine screws.

The PAL-AT panel is connected to the sensor cable using jumper cable (Type JMP-U, JMP-UD or JPP). An exception to this requirement is ATP cable that uses 50' [15 m] of ATP for jumper (see section 9). **At least 50' [15 m] of jumper cable (65' [20 m] if JPP) must be connected between the panel and the connection to the sensor cable.**

The jumper cable must be run in a separate conduit from the power supply cable. All conduit fittings must be appropriately rated and installed properly to maintain the rating of the enclosure. All electrical connections must comply with local codes. **Remove the system board from the white back panel (six #6-32 screws) before drilling holes in the enclosure for conduit openings to prevent damage and contamination from metal shavings.**

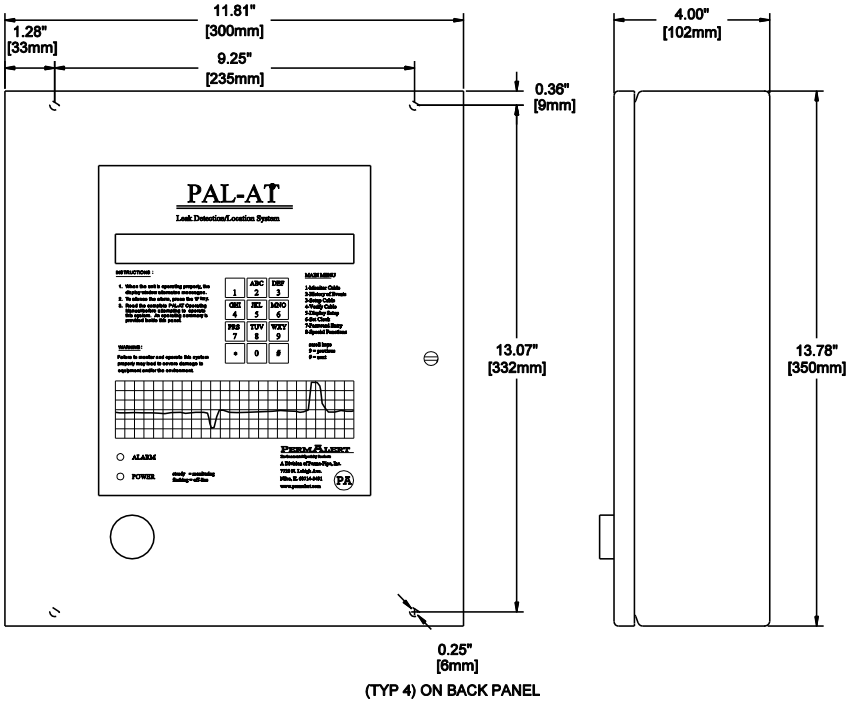

Models AT30C, AT75C and AT30K
Mounting Dimensions

Figure 2-1

2 PAL-AT Alarm Panel

2.2 Terminals

The terminals on the PAL-AT system board use a quick-connect design that provides an easy, fast and robust connection. A flat blade screwdriver, 1/8" [3.5 mm], is used to press down on the terminal lever and open the terminal for easy wire insertion. Release the lever, and the wire is tightly clamped. **The acceptable wire size for connection to any terminal, including the mains, is 28 - 12 AWG [0.08-2.5 mm^2].** The terminals can accommodate solid or stranded wires. **If ferrules are used with stranded wire, the maximum wire size is 14 AWG [1.5 mm^2].** Refer to the detail located at the upper right side of figures 2-2 and 2.3. **Caution: The lever only travels 1/8" [3.5 mm] to open the terminal completely, and only requires 5 - 8 lbs [2-4 kg] force. Do not exceed these limits or the terminal will be damaged.**

2.3 Power Connection

The PAL-AT must be permanently wired to instrument-quality power using appropriate certified conduit, fittings, and wiring. Refer to figures 2-2 and 2-3 wiring diagrams for details. The PAL-AT contains a universal power supply. The power requirement is 110-240 VAC, 50 / 60 Hz, 0.3 A / 50 VA.

A suitable external over-current protection device, such as a fuse or circuit breaker (15 A), and disconnect device is recommended. The over-current protection and disconnect devices shall be installed on all ungrounded conductors, i.e. the terminal marked hot (L) (and neutral (N) terminal if ungrounded for 240 VAC). The disconnect device shall be located near the equipment and marked with appropriate ON (I) OFF (O) markings as specified by local codes. The ground conductor shall have green with a yellow stripe insulation and be connected to the grounding connection on the upper right corner of the back panel as shown. Installation should be performed by qualified personal in accordance with local codes and procedures.

The PAL-AT can also be powered by a 24 VDC, 1 A / 24 VA, over-current protected power source at terminal T5. Fuse F1 on the PAL-AT system board protects the 24 VDC input. It is a 2A, 250 V, time-delay, 5 x 15 mm fuse.

Caution - Before accessing the PAL-AT panel, the panel must be disconnected from the power source and isolated from any hazardous voltage present in the panel, e.g. relay wiring.

Three internal switches on the system board control the power source utilized by the panel. These switches are intended for use by service personnel. Set the AC Power Switch (SW3) and the 24 VDC Power Switch (SW1) in the down, or "OFF" position. Next, set the Input Power Select Switch (SW2) to either VAC or VDC depending on the desired power source. The panel is controlled by SW3 for AC power *or SW1 for DC power.*

2.4 Audible Alarm Wiring

An internal 90-dBA pulse horn is supplied. An optional chime alarm is available. The wiring for the horn is a 2-wire cable connected to terminal strip T6. The red wire must be connected between the "+" terminal on the horn and the "+" T6 terminal. The black wire must be connected between the "-" terminal on the horn and the "-" T6 terminal. The terminal provides 24 VDC @ 10 mA.

2.5 Control Relays

PAL-AT has 3 to 6 SPDT output relays, depending on the model, rated for 250 VAC, 10 A. They are labeled "Fault Alarm", "Common Alarm" and "Cable x", where x=1 to 4 for the appropriate cable number (see figures 2-2 and 2-3). The relay contacts are labeled in their unpowered or "on-the-shelf" condition.

The fault relay is energized whenever the panel is powered. It is used to monitor for power loss.

The common alarm relay will be switched in response to any fault condition. The # key can be pressed to reset the common alarm relay to its normal state and deactivate the internal audible alarm for up to 96 hours. The default reset time is 12 hours.

The cable relay(s) will activate when a fault is detected and will reset when the fault returns to normal or the alarm queue is cleared. The default setting is to activate for all alarms, but it is firmware selectable to activate in response to only leak and probe active alarms.

Control devices or auxiliary equipment should be connected to the cable relay(s) so they will not be reactivated when the alarm is silenced. PAL-AT is shipped with the common alarm and cable

relays configured to operate in a normally de-energized mode, so they energize when the panel is in the alarm state (see the *PAL-AT Operating Manual* for changing relay configuration).

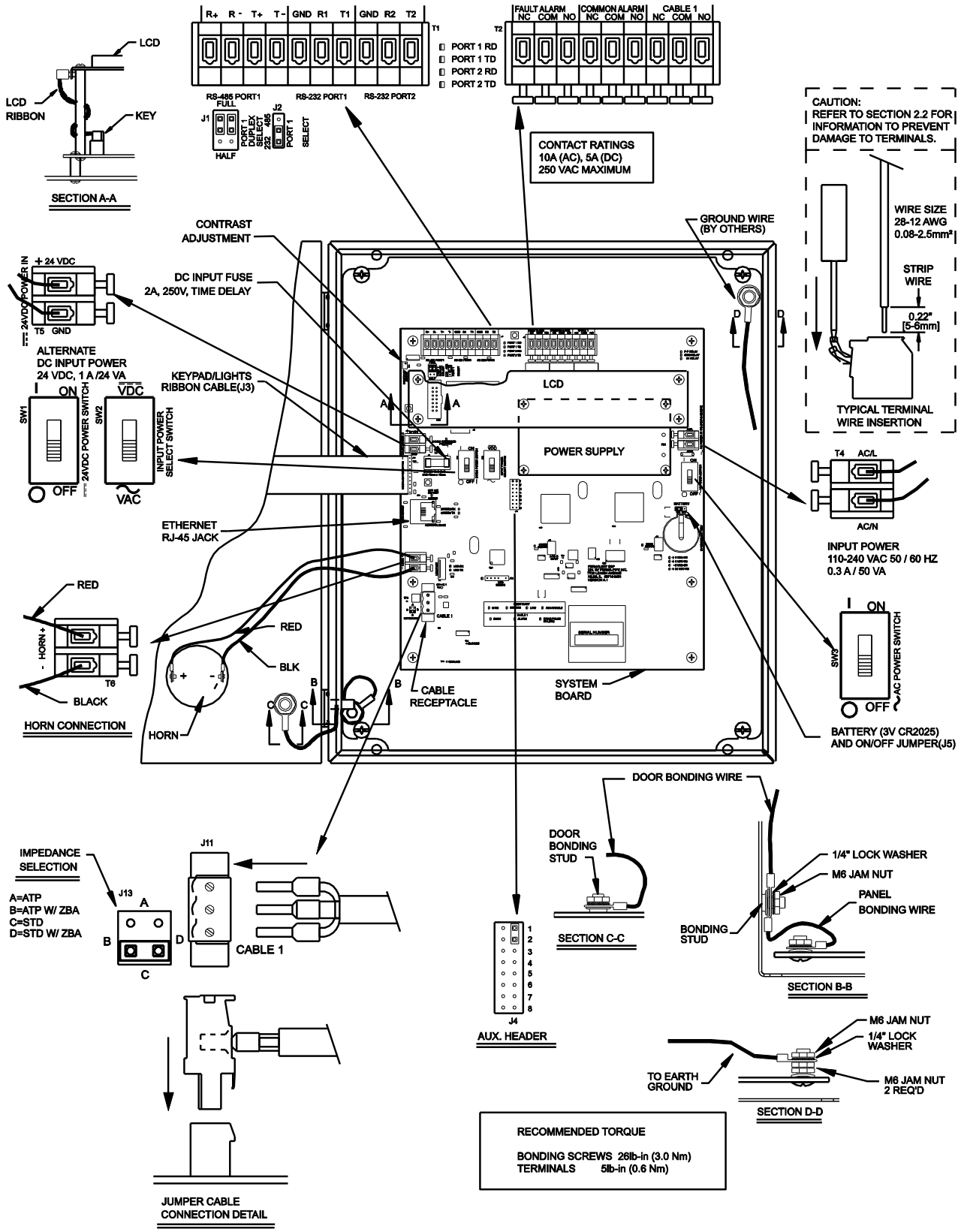

Figure 2-2
Wiring Diagram for PAL-AT Models AT30C & AT75C

2 PAL-AT Alarm Panel

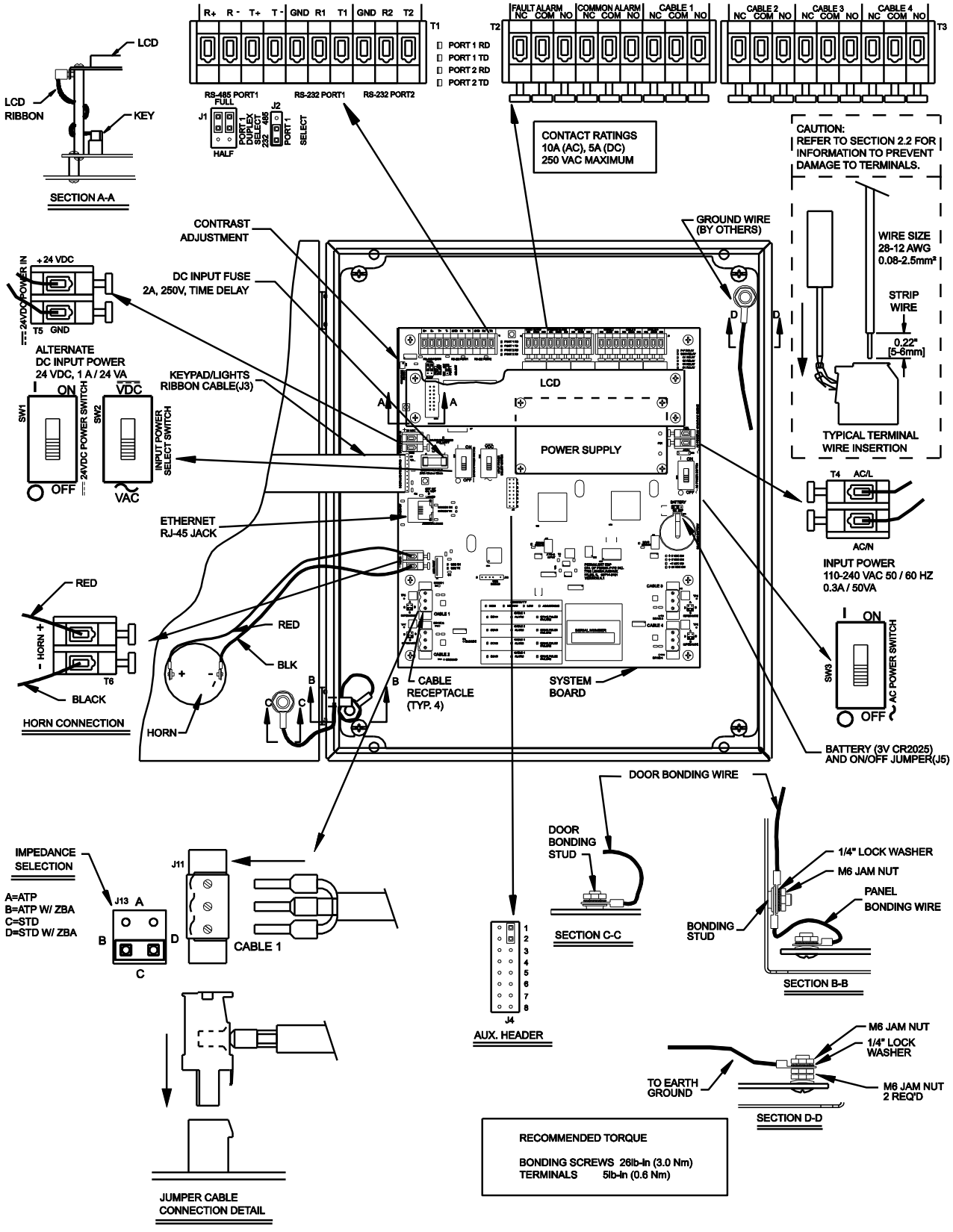

Figure 2-3
Wiring Diagram for PAL-AT Model AT30K

2.6 Communications

PAL-AT is provided with several options for communication. The options include:

Port 1 – RS-485/RS-232
Port 2 – RS-232
Ethernet - RJ-45 connector

Refer to the *PAL-AT Operating Manual* for complete operating details and firmware configuration.

2.6.1 Port 1 - RS-485/RS-232

Port 1 can be configured for RS-485 or RS-232 (refer to figures 2-2 and 2-3). To configure it for RS-485, jumper J2 should be placed in the top position. Then the two jumpers at J1 can be set to select either full (top positions) or half-duplex (bottom positions).

Full duplex is available using two twisted-pairs connected to T1 terminals R+, R-, T+ and T-.

Half duplex, or 2-wire RS-485, requires a jumper wire connecting terminal R+ to T+ and a jumper from R- to T-. Each PAL-AT is a full load for the RS-485 network. A crimp ferrule is recommended to connect each incoming RS-485 lead to the corresponding jumper wire to insure a solid connection of the two wires in the T1 terminals.

All RS-485 cables in the network should be properly terminated as per EIA RS-485 recommendations. Typically the network is a daisy-chain configuration and two 120 ohm termination resistors are installed, one at each end of the network. Shields of the network cables should be connected together and grounded at only one point.

Port 1 can be configured for RS-232 by moving J2 to the bottom position. Then a 3-conductor cable should be connected to T1 terminals GND, R1 (receive) and T1 (transmit). The baud rate is configured via the PAL-AT firmware.

2.6.2 Port 2 - RS-232

RS-232 communications through port 2 requires a 3-conductor cable connected to T1 terminals GND, R2 (receive) and T2 (transmit). The baud rate is configured via the PAL-AT firmware.

2.6.3 Ethernet

An Ethernet RJ-45 jack provides a TCP connection to the PAL-AT. There are three ports available to handle different protocols: port 1024 for ASCII data (PALCOM), port 502 for Modbus TCP, and port 1050 for Modbus RTU over TCP.

An optional BACnet gateway is also available. Refer to Modbus to BACnet Converter Instructions (DOCID: PPPA-PRC-CSV-006) for more information.

Refer to the *PAL-AT Operating Manual* for complete operating details and firmware configuration.

2.7 Replaceable Parts

Caution - Before accessing the PAL-AT panel, the panel must be disconnected from the power source and isolated from any hazardous voltage present in the panel, e.g. relay wiring.

2.7.1 Battery

Battery BT1 on the PAL-AT system board maintains the clock settings when the panel is off. Jumper J5, located above the battery, must be set “On” (left position) to enable the battery. The battery is a 3 V lithium type.

Replace Battery With Energizer CR2025 Only. Use of Another Battery May Present A Risk of Fire or Explosion.

Caution, Battery May Explode if Mistreated. Do Not Recharge, Disassemble or Dispose Of in Fire.

It can be obtained locally or through PermAlert. It is replaceable by gently lifting the retaining clip to remove the old battery and sliding in the new one. Be careful to install the battery correctly. The lettering on the battery (+) should be facing out.

2.7.2 24 VDC Fuse

In addition to a user supplied external overcurrent protection device, fuse F1 on the PAL-AT system board protects the 24 VDC input. It is a 2 A, 250 V, time-delay, 5 x 15 mm fuse. It can be obtained locally or through PermAlert.

2.8 Contrast Adjustment

The contrast of the LCD can be adjusted by turning the contrast adjustment screw on the system board (see figures 2-2 and 2-3). This may be necessary to get the best viewing angle, depending on the mounting height of the PAL-AT panel.

2.9 Impedance Jumper Setting

Refer to figures 2-2 and 2-3 for positioning the impedance jumper. The 2-pin jumper is placed in position A, B, C, or D according to the type of cable and whether a Zener Barrier Assembly (for hazardous locations) is connected to the selected cable. The position should be:

Jumper Position	Cable Type	Zener Barrier Ass'y Installed
A	ATP only	No
B	ATP only	N/A
C	All others	No
D	All others	Yes

2.10 UL

PAL-AT is listed by Underwriters Laboratories, Inc. for installation in ordinary locations. The optional Zener Barrier Panel must be installed if any leak detection circuits are located in hazardous locations.

CAUTION - The maximum operating voltage allowed in the PAL-AT panel is 250 VAC. In addition, the voltage on any wires to the control relays must be limited to 250 VAC.

2.11 FCC and CE Compliance Requirements

Each PAL-AT system is supplied with several "ferrite blocks" (PermAlert part # 8058207) to comply with FCC and CE regulations for a Class A digital device. The sensor cables, jumper cables, and all communications wires must pass through two blocks before exiting the enclosure (see figure 2-4). All relay wires and power wires must pass through one block.

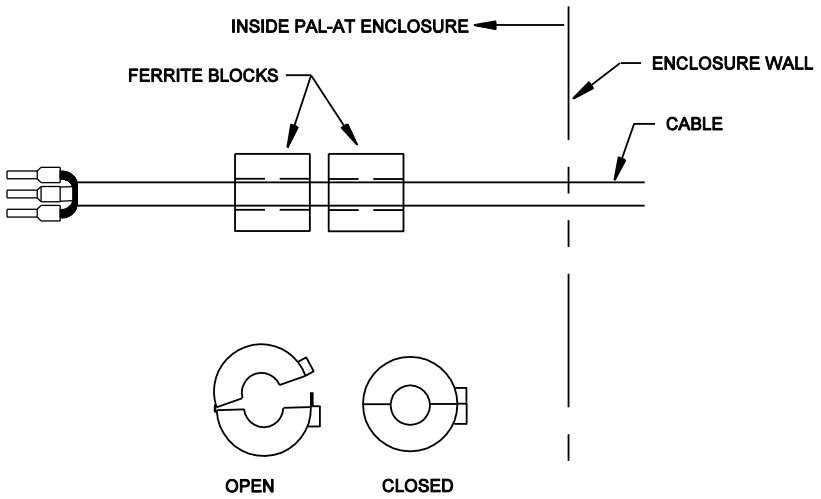

NOTE: JUMPER CABLES AND COMMUNICATION CABLES MUST PASS THROUGH 2 FERRITE BLOCKS.
RELAY WIRES AND POWER WIRES MUST PASS THROUGH 1 FERRITE BLOCK.
A FERRITE BLOCK CAN HAVE MORE THAN 1 WIRE IN IT IF THERE IS SUFFICIENT SPACE.

Figure 2-4
Ferrite Block Assembly

3 Zener Barrier Panel

3.1 Introduction

The optional Zener Barrier Panel (ZBP) is available for connection to PAL-AT when leak detection cables and probes are installed in hazardous locations. It provides intrinsically safe output circuits for use in Class I, Division 1 Groups C and D hazardous locations (Zone 0, Group IIB) when used with PAL-AT sensor cables, jumper cables, and probes, installed in accordance with the instructions in this manual. **Refer to Appendix A, Special Instructions, for intrinsic safety requirements.**

The ZBP also functions as a surge suppressor and reduces the chance of damage to the internal Zener Barrier Assemblies (ZBA) and PAL-AT from external voltage spikes, e.g. nearby lightning strikes.

3.2 Panel Installation

The ZBP is designed to be permanently mounted indoors in a dry, non-hazardous location. The enclosure is rated Type 4, 12 [IP66] (see figures 3-1, 3-2, and 3.3). The enclosure must not be located in direct sunlight to prevent excessive heat buildup. **In all installations, the ambient temperature surrounding the panel must not be less than -4°F [-20°C] and not exceed 140°F [60°C].** Relative humidity must be less than 95% (non-condensing).

The ZBP must be located adjacent to the PAL-AT panel. **Each Zener Barrier Assembly (ZBA) in the panel has a 5 ft [1.5 m] cable connected to the cable plug in the PAL-AT. The cable must be run in conduit between the two panels.**

The jumper cable from the ZBP to the sensing cable in the hazardous location must be routed in conduit. All conduit fittings must be appropriately rated and installed properly to maintain the rating of the enclosures. All electrical connections must comply with local codes. Seal-offs may be required to prevent vapors from traveling into the ZBP.

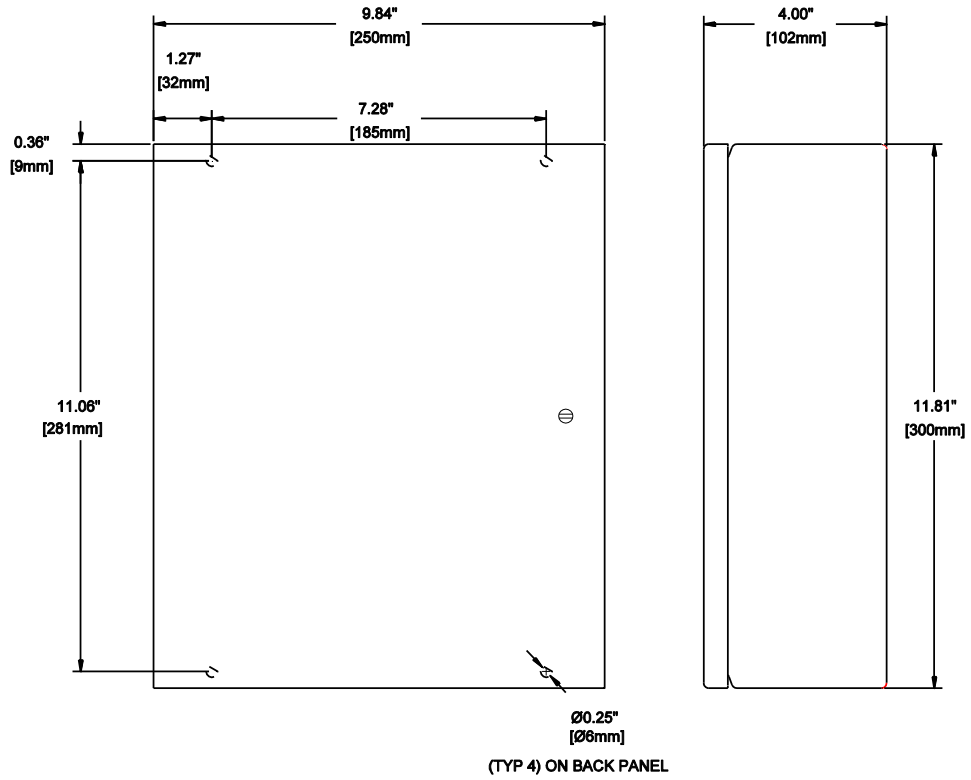

Figure 3-1
Zener Panel Mounting

3 Zener Barrier Panel

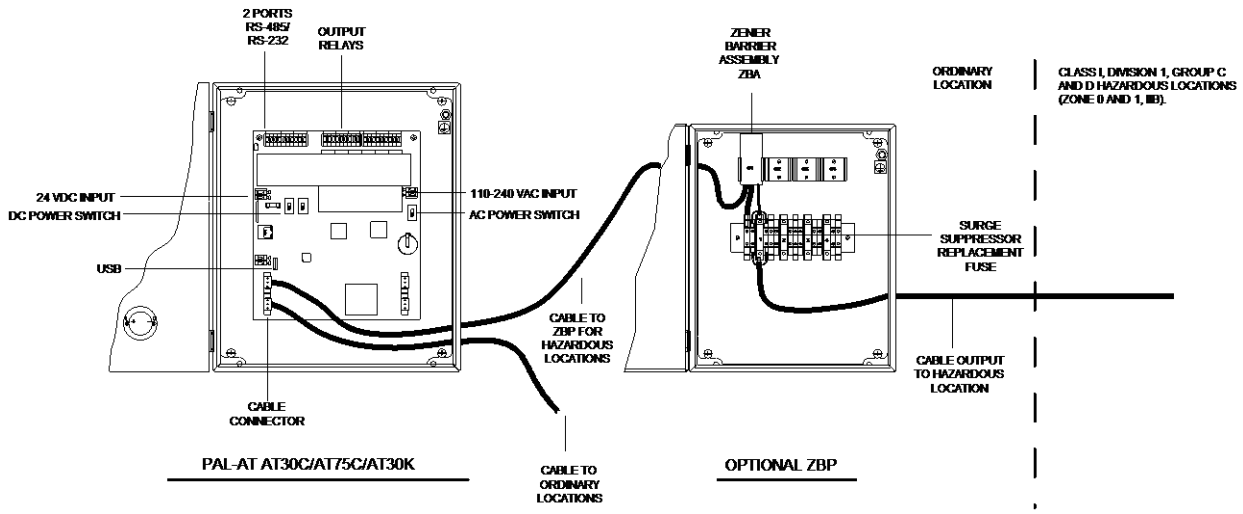

Figure 3-2
PAL-AT and Zener Barrier Panel

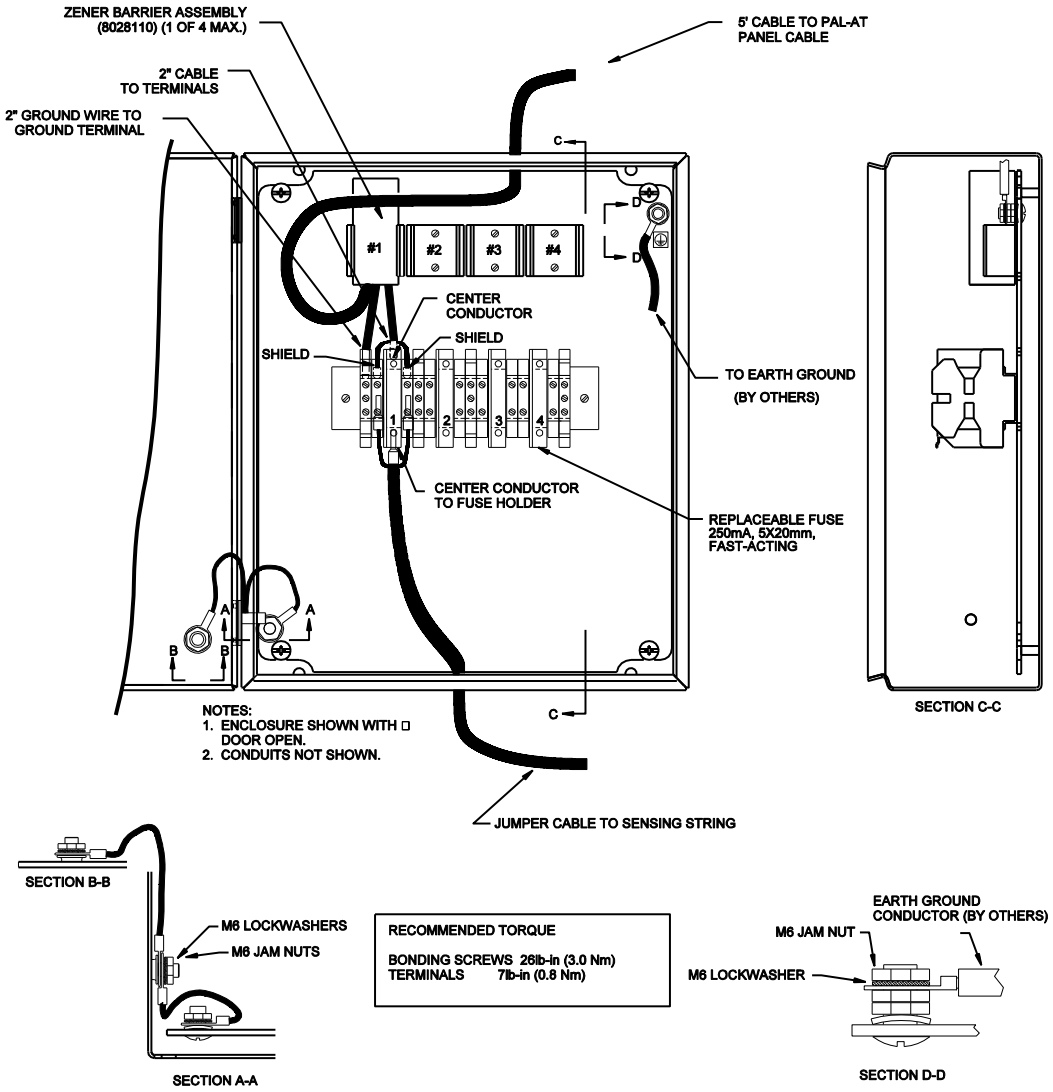

Figure 3-3

Zener Barrier Panel (ZBP) Wiring

3.2 Panel Wiring

The standard Zener Barrier Panel (ZBP) includes one zener barrier assembly (ZBA) and has provisions to install three additional ZBA's. Each ZBA has a 2" [50 mm] coaxial cable lead, a 5' [1.5 m] coaxial lead and a 2" [50 mm] ground wire.

The 5' [2 m] cable should be routed through conduit and connected to the appropriate cable plug in the PAL-AT panel. The jumper cable to the PAL-AT sensing string should be connected to the fuse holder and adjacent terminal blocks for the appropriate cable number. The jumper cable should have a ferrule on the center conductor and two ferrules on the braid. Refer to section 8, Cable Connectors, for details.

A customer supplied earth ground wire, minimum 12 AWG [4 mm^2], must be connected between the ground connection on the upper right corner of the white back plate of the enclosure and the ground bus of the power distribution panel.

3.3 Zener Barrier Assembly (ZBA) Installation

Refer to figure 3-3 to install a ZBA.

1. If an existing ZBA is to be replaced, loosen the four screws on the terminal strip for the ground wire, coaxial cable center conductor, and two coaxial cable braid wire ferrules. Lift the ZBA out of the mounting clip. Remove the end of the 5 ft. long cable from the connector in the PAL-AT panel.
2. Position and rotate the new ZBA so the 2" ground wire aligns with the appropriate ground terminal (green/yellow terminal). Note the ground terminal for barrier #4 is on the opposite side of the fuse holder as the other barriers. Loosely insert the ground wire, the coaxial center conductor ferrule and two braid wire ferrules into the ground terminal, fuse holder and adjacent terminals. The ground wire ferrule is a snug fit in the terminal and may have to be rotated slightly to insert fully.
3. Press and hold the ground wire fully inserted into the ground terminal, while tightening the terminal screw. Next, press and hold in place the coaxial center conductor ferrule into the fuse terminal and tighten the terminal screw. Similarly, press, hold and tighten each of the braid wire ferrules. Snap the zener barrier assembly into the plastic holder. The 5' [1.5 m] cable should be routed through conduit and connected to the appropriate cable plug in the PAL-AT panel.

3.4 Fuse Protection

Each Zener Barrier Assembly is protected from external voltage surges by a replaceable fuse in the terminal strip fuse holder. The 5 x 20 mm fuse is rated 250 mA, 250 V, fast-acting (Littelfuse 0217.250 or equal). A replacement may be purchased from PermAlert (part # 8067989) or obtained locally.

3.5 Allowable Cables and Probes

Refer to Appendix A – Special Instructions for the PAL-AT control drawing and additional intrinsic safety requirements for hazardous areas. The following cables, probes, and probe integrators supplied by PermAlert comply with the allowable electrical characteristics:

Part No.	Cable Type	Part No.	Probe Type	Part No.	Probe Type
8017705	AGW-Gold	8027888	PHLR-S	8027920	PSTV-L
8017700	AGT-Gold	8027889	PHLR-L	8027633	PTHL-S
8017640	TFH-Gold	8027911	PHLR-P-S	8027970	PTHL-L
8017635	TFH	8027912	PHLR-P-L	8027629	PT10-SC
8017715	JMP-U	8027623	PFS-S	8027932	PT10-SO
8017718	JMP-UD	8027910	PFS-L	8027930	PT10-LC
8017685	JPP	8027624	PSTV-S	8027934	PT10-LO

Note: A PWS probe or a probe integrator connected to a customer supplied probe having an exposed conductive surface, may not be connected to a ZBA.

3 Zener Barrier Panel

4 Jumper Cable and Junction Box Installation

4.1 Jumper Cable

1. Jumper cable (types JMP-U, JMP-UD, or JPP) is used to connect sensor cable segments and probes in series to form the sensing circuit (sensing string). Jumper cable is not affected by occasional contact with water and can be installed in building and vaults. In underground locations and areas where damage may occur to the jumper cable, electrical conduit should be used to provide protection. In wet environments or areas subject to flooding, cable connectors on jumper cable should be located in watertight electrical junction boxes (NEMA 4 or 4X) [IP66].
2. At least 50' [15 m] of jumper cable (65' [20 m] for type JPP) must be installed from the PAL-AT panel or Zener Barrier Panel to the first section of sensor cable or probe. An exception is connecting to ATP cable (see section 10).
3. Table 4-1 lists the length of jumper installed at the very end of a sensing string. A cable connector must be installed to terminate the end of the last jumper cable section and a threaded plastic cap is supplied to cover the connector.
4. Refer to section 9, table 9-1 for additional jumper cable required in a probe section.
5. Where possible, jumper cable connections to sensor cable should be made within the monitored area. PermAlert recommends the use of OZ Gedney, or equal, cord grips installed as shown in figure 4-1. Cord grips must clamp only jumper cable or TFH cable. The plastic outer braid on TFH cable must be pulled back so the cord grip is located on the smooth outer jacket.
6. Check the cable/connector assembly with an ohmmeter in accordance with the cable testing procedures contained in this manual.
7. The recommended minimum bend radius for all jumper cables is 1.5” [38mm].

Table 4-1
End of System Jumper Cable Length

System Length ft / [m]	JMP-U/UD End Jumper Length ft / [m]	JPP End Jumper Length ft / [(m]
0–2500 / [0-750]	30 / [9]	40 / [12]
2500-5000 / [750-1500]	50 / [15]	65 / [20]
5000-7500 / [1500-2300]	100 / [30]	125 / [40]

4 Jumper Cable Installation

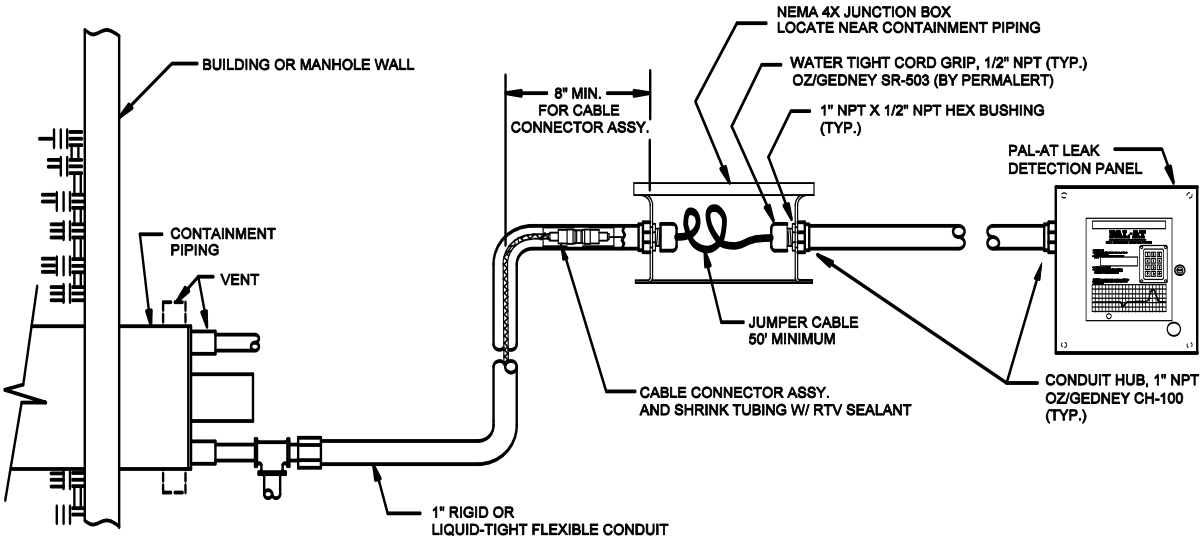

Figure 4-1
Typical Cable Connection in Monitored Areas with Junction Boxes

4.2 Calibration Points

1. During the initial setup and calibration of the PAL-AT system, connectors at selected locations (calibration points) are temporarily disconnected. **Therefore, it is imperative to have accessibility to connectors at calibration points at all times until the system is brought on-line.**
2. Reported fault location accuracy of the first leak is dependent upon the use of and distance between calibration points. Calibration points are required at changes of cable types unless connected to short lengths of jumper cable (15' [5 m] or less). Additional calibration intervals of 500' [150 m] or less will result in location accuracy of within +/- 5' [1.5 m]. Systems installed with calibration intervals exceeding 500' [150 m] will have a location accuracy of less than +/- 1% of the cable length from the previous calibration point.

4.3 Junction Boxes

There are two series of junction boxes supplied by PermAlert. The standard, polyester box has a maximum temperature rating of 150°F [65°C]. A fiberglass box is available for temperatures to 300°F [150°C].

1. Locate and install all junction boxes before installing any cable. Locate junction boxes as indicated on system drawings or as required. These locations include calibration points, the start and end of cable runs, manholes, probes, etc. Care must be taken to prevent water from contaminating these areas.
2. Securely mount the junction boxes to a vertical wall. In manholes or pits that might collect and hold water, mount junction boxes as high as possible. Use NEMA 4X [IP66] junction boxes at all locations.
3. Use a hole saw to cut the junction box as needed for conduit.
4. When jumper cable is installed in electrical conduit, use watertight conduit hubs and cord grips at junction boxes. Discard the male bushing supplied with the hub and use the cord grip supplied in its place. Depending upon the specific products used, a lock nut may be required on the cord grip's threads to pull the hub tight to the wall of the junction box.

   Caution: Always keep junction boxes and electrical conduits capped to prevent water from entering.

5 Cable Installation in Secondary Contained Piping

5.1 General

In secondary contained pipe applications, the sensor cable is installed in the bottom (6 o'clock position) of the air space between the product pipe(s) and secondary containment (outer casing or conduit). The leak detection cable is a sensitive sensor, capable of detecting small amounts of liquid. **Therefore, every effort must be made to keep the cable dry and prevent water from entering the air space. In addition, long-term accumulations of water, corrosive liquids, or hydrocarbon liquids in the containment pipe may degrade the containment or the leak detection system components.** The piping system must remain sealed during installation to prevent moisture entering the system. The installing contractor must install caps on the open ends of pipe installed in a trench to prevent liquids from entering the conduit or containment pipe.

Caution: A heated system using mineral wool or fiberglass insulation should be carefully monitored during startup. If the insulation is wet (even from atmospheric moisture) prior to startup, the water may combine with the ammonium sulfate binders in the insulation and release ammonia when the pipe is heated. The ammonia is detrimental to the leak detection cable and may be detrimental to the piping system if left uncorrected.

If the system becomes wet, it must be completely dried. Drying methods can consist of pulling a vacuum on the interstitial space, using compressors with desiccant dryers, or other methods. Obtain guidance from your piping supplier on proper techniques to be used with your system.

This section is intended to cover installation methods typically employed with any fabricated secondary contained pipe systems. Typically, these manufactured products are custom fabricated with product pipes positioned by specially designed supports within the secondary containment. **All pipe supports and changes in direction must have guides constructed out of stainless steel, minimum ¾" [20 mm] ID tubing, with flared ends. Plastic supports must be avoided when the carrier pipe is metal. Consult with the piping system manufacturer before installation to ensure provisions are being made for the cable installation.** Because the sensor cable installation is dependent upon the design provisions employed by the pipe manufacturer, it is recommended the secondary pipe manufacturer supply the leak detection/location products. This sole source responsibility will greatly facilitate proper installation with lower cost.

The following charts are general references for installing a sensor cable into field-constructed secondary contained pipe system built with piping components. Typically, these systems are constructed using standard lengths of pipe and fittings for the product and secondary containment structures. Components of the piping system should be designed, manufactured, and installed to facilitate sensor cable installation. Because the sensor cable is placed on the bottom of the air space, there must be a continuous unobstructed passage for the cable(s) being pulled into the system. **PermAlert recommends a 1" [25 mm] air space. Pipe support design and alignment is critical. Pipe supports and other surfaces the cable contacts during "pulling" operations must be smooth to prevent snagging or damaging the cable.**

Field joint designs and procedures employed in the installation of the piping system must prevent damage to the pull rope and/or sensor cable.

Pull ropes must be installed as the pipe system is assembled together to facilitate the installation. Special stainless steel ¾" [20 mm] ID guide tubes must be installed in the air space of the containment straight, elbows, tees and wyes (lateral) at the factory. Pull points must be designed and provided at specific locations to facilitate the installation of the pull cable and leak detection cable. **The recommended minimum bend radius for all sensor and jumper cables is 1.5" [38mm].**

5 Cable Installation

Leak Detection Sizing Chart
Polypropylene / Polyethylene Piping SDR Sizes

Pipe Size (in) [mm]	Casing Size (in) [mm]	SDR11/SDR11	SDR11/SDR32.5
1.5 [40]	4 [100]	OK	OK
2 [50]	6 [150]	OK	OK
3 [80]	6 [150]	OK	OK
4 [100]	8 [200]	OK	OK
6 [150]	10 [250]	OK	OK
8 [200]	12 [300]	OK	OK
10 [250]	14 [350]	NO	OK
12 [300]	16 [400]	N/A	OK
14 [350]	18 [450]	N/A	OK
16 [400]	20 [500]	N/A	OK

Leak Detection Sizing Chart
For Standard Weight Steel and Fiberglass Pipe
(w/o insulation, 10 gauge steel or fiberglass containment)

Pipe Size (in) [mm]	Casing Size (in) [mm]
2 [50]	6 [150]
3 [80]	6 [150]
4 [100]	8 [200]
6 [150]	10 [250]
8 [200]	12 [300]
10 [250]	14 [350]
12 [300]	16 [400]

Note:

1. **Not all pipe types or sizes are shown in the above charts. For different systems, contact PermAlert.**
2. **Chart is based on smooth pulling surfaces and installation of guide tubes.**
3. **Multi pipe system will require factory sizing.**

5.2 Pull Points

1. Sensor cable must be “pulled” into the monitored areas using a continuous pull rope free of splices between pull points. Surfaces the cable contacts during “pulling” operations must be smooth to prevent snagging or damaging the cable.
2. Generally, pull points can be located at 500' [150 m] intervals for straight runs. Each 90° fitting on the run reduces the interval by 150' [50 m]. For example, a run of 50' [15 m] with three elbows is allowable (500' - (3 x 150') = 50').
3. Pull point designs should be selected not only based on accessibility during installation, but potential future cable replacement. When future cable replacement is a consideration, it is recommended underground installations have watertight junction boxes or secondary contained access points installed at grade or in vaults (see figure 5-1).

Caution: Pulling points often become calibration locations. When this occurs, accessibility to the cable connectors is necessary during the initial commissioning of the PAL-AT and the system’s setup procedures.

4. **Pull ports may also be used for periodic testing**. If so, a short length of sensor cable (minimum 5' - AGW-Gold, 15' – TFH/TFH-Gold) with connectors should be installed in the pull port during the initial setup. It is used as a test piece and can be replaced if needed after testing without setting up the cable string again.

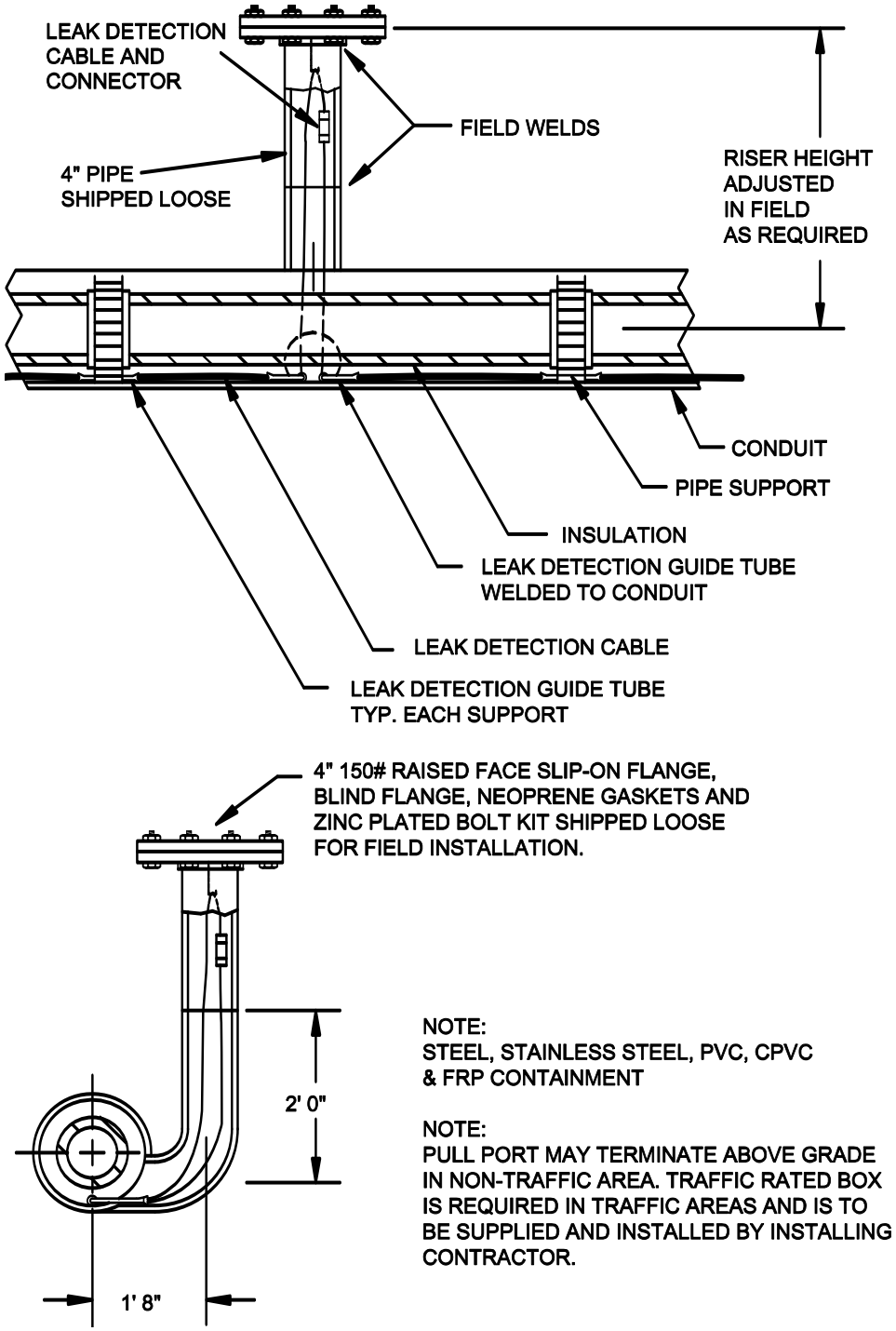

Figure 5-1
Detail of Pulling Point

5 Cable Installation

5.3 Cable Splices

Continuous pull rope and sensor cable are "pulled" into the secondary containment during certain stages of installation. Several splices are used to provide secure attachments to pull ropes and cable during this procedure. The following methods are recommended for splicing.

Note: When using tape to seal the splices, use only PVC electrical tape. PVC tape minimizes drag on the cable and reduces snags.

5.3.1 Factory Installed Fiber Pull Rope to Continuous Pull Wire Rope Splice

Step A Extend 12" to 18" [300 mm to 450 mm] of fiber rope and 14" to 20" [350 mm to 500 mm] of wire rope.

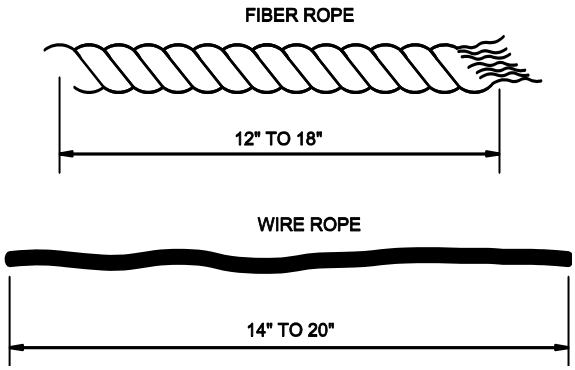

Step B Wrap a small amount of electrical tape around the fiber rope's end to prevent unraveling. Using a small pointed object (such as a nail), slightly separate the fiber rope braid and weave the wire rope into each opening of the braid as you go.

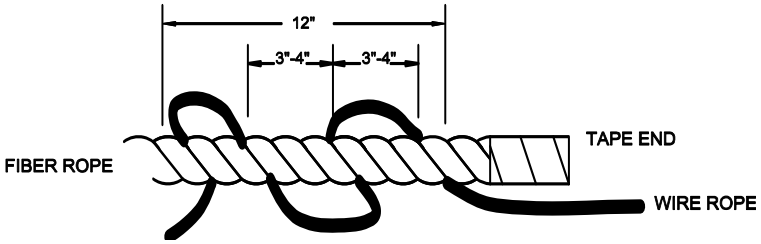

Step C Pull the wire rope tight, as it is woven into the braid.

Step D Using electrical tape, wrap the entire length of the splice area. The tape should extend approximately 2" [50 mm] over each end of the splice.

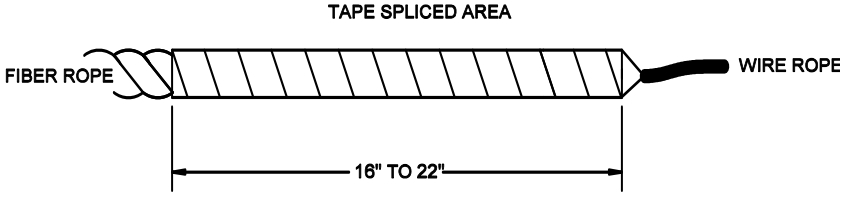

5.3.2 Wire Rope to Wire Rope Splice

Step A Extend 12" to 18" [300 mm to 450 mm] of each wire rope end for the splice.

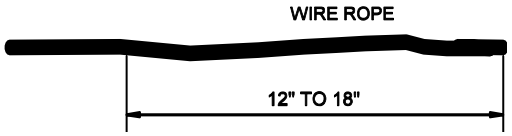

Step B Unravel each of the 12" to 18" ends into a 3-strand and a 4-strand section (approximately 50% in each), keeping the adjacent strands together.

Step C Starting approximately ¼" to ½" [6 mm to 12 mm] from the start of the wire rope's split, intertwine a section from each of the two ropes.

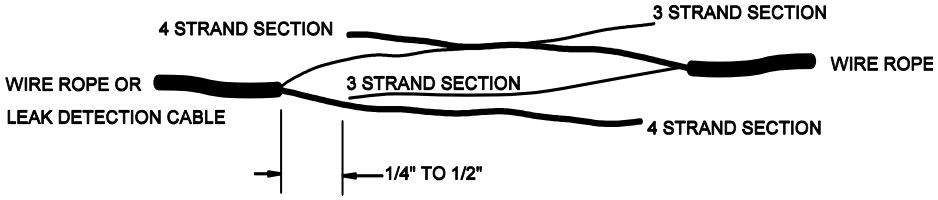

Step D Line up the two remaining sections and intertwine them together in a similar manner. In order to minimize the size of the splice, make sure the starting points for each intertwining operation line up with each other.

Step E Starting at approximately 1" [25 mm] from the beginning of the splice, wrap electrical tape around the splice until the entire splice, plus 1" on each end, is covered. Normally only one wrap is needed. Make sure both ends of the tape wrap are tapered and smooth in case the pull direction must be reversed.

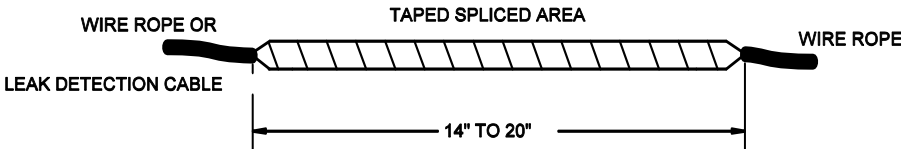

5.3.3 Wire Rope to Wire Rope Splice (alternate)

Note: Use this splice when splicing two different size wire ropes together

Step A Extend 8"-10" [200 mm to 250 mm] of each wire rope to be spliced.

Step B Unravel each of the 8"-10" sections (to approximately the same length) into two sections to form a Y with three adjacent spiral strands on one side, three adjacent spiral strands with center strand on the other.

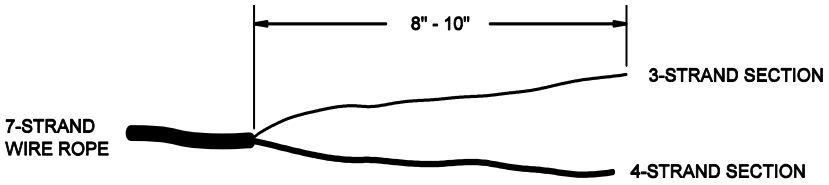

Step C Taking one end of the first cable, fold over the 4-strand section of the Y to form a loop. Join the 3-strand section to the 4-strand section. Wrap the 3-strand section around the 4-strand section so the strands appear as in the original undisturbed cable.

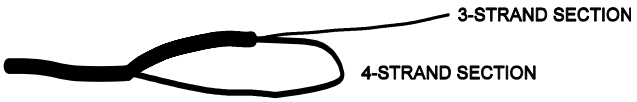

Step D Take the second cable Y end and place the 4-strand end through the eye of the first cable loop.

Step E Repeat steps A through C.

Step F Using a pair of pliers, crimp the ends of the loops.

Step G Spiral wrap the splice tightly, using electrical tape.

5.3.4 Wire Rope to Leak Detection Cables

The following steps apply in general to all sensor and jumper cables. However, there may be slight variations to the steps presented depending on the cable selected. For example, the jumper cables have an outer jacket but no plastic overbraid, while the TFH cable has both a jacket and an overbraid.

Step A Extend the 7-strand 1/8" [3 mm] wire rope for splicing. Cut the end so all strands are even.

Step B Unravel 8" [200 mm] of the wire rope into two sections to form a "Y" with three adjacent spiral strands on one side and four strands on the other side.

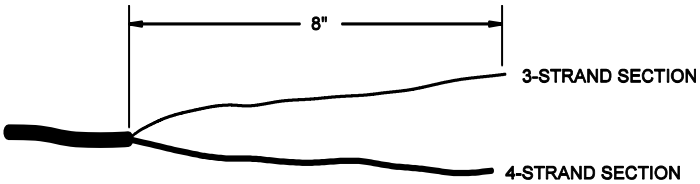

Step C Extend approximately 5' [1.5 m] of cable for the splice. Form a small loop in the shape of a "U" 5' from the end of the cable and tape it in place tightly. Do not kink the cable when forming the "U" (Skip this step with jumper cables.)

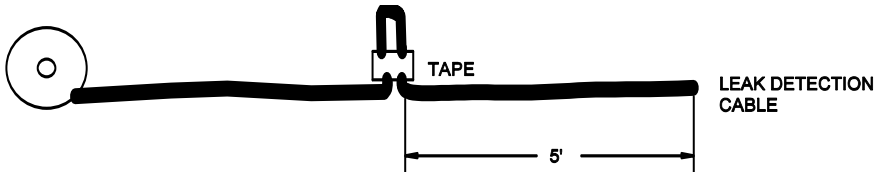

Step D Cut the end of the cable so the plastic overbraid, jacket, metallic braid, center conductor insulation, and center conductor are flush at the end of the cable.

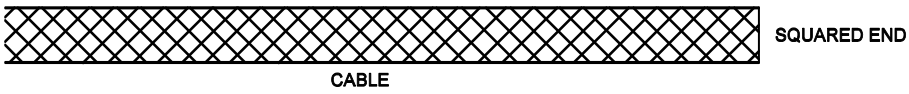

Step E Slide the plastic overbraid back over the sensor cable at least 24” [600 mm] and tape in place tightly.

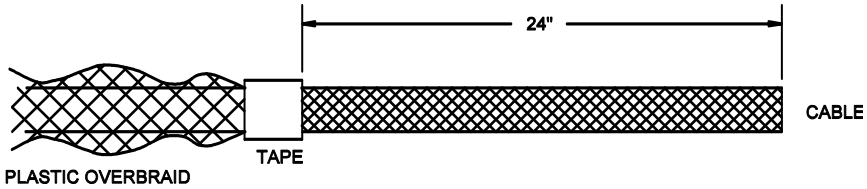

5 Cable Installation

Step F Cut 5" [125 mm] off the exposed end of the sensing cable.

Step G Cut off 15"-18" [380 mm to 450 mm] of the outer jacket and tightly tape the edge of the outer jacket to the metallic braid. (This applies to only TFH and jumper cables.)

Step H Slide 12" [300 mm] of the metal braid back towards the taped jacket. Tape the metallic braid in place.

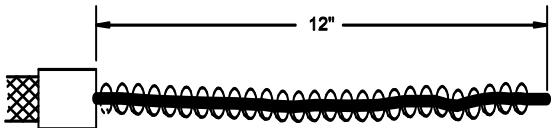

Step I Cut 4" [100 mm] off the end of the center conductor and conductor insulation.

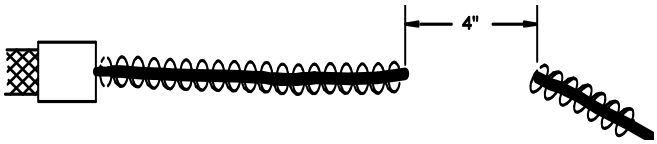

Step J Carefully remove 6"-8" [150 mm to 200 mm] of the dielectric spacer material and conductor insulation from the center conductor. Do not cut the center conductor strands when removing the thin film of insulation. Securely tape the end of the dielectric spacer to the center conductor.

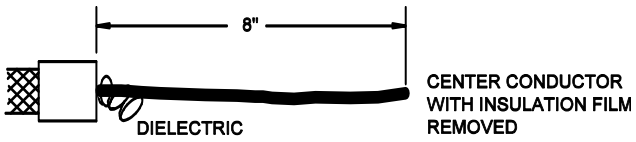

Step K Insert 1" [25 mm] of the cable's center conductor into the throat of the wire rope.

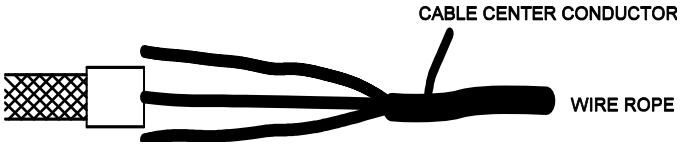

Step L Carefully braid 1" of the 3 and 4-strand sections of the wire rope.

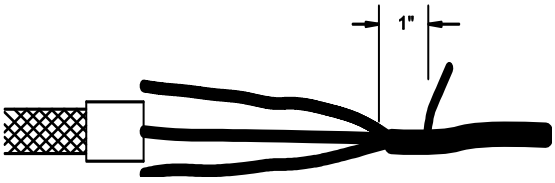

Step M Insert the center conductor of the cable into the next section of the Y throat of the wire rope. Continue to wrap and insert until approximately 5"-7" [125 mm to 175 mm] of the cable center conductor is woven into the wire rope. Tape the end of the wire rope with electrical tape. Cut off excess wire rope at the end of the splice if necessary.

Step N Spirally tape the entire spliced wire rope/center conductor area tightly from front to end.

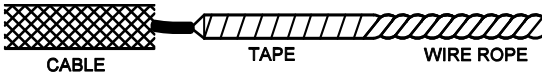

Step O Carefully slide the metallic braid over the woven splice area making sure the braid extends over the splice as much as possible, and is tight.

Step P Tightly tape the metallic braid in place, from the left end. Extend the tape just past the woven splice area. (Include 2”-3" [50 mm to 75 mm] of the white jacket if applicable.)

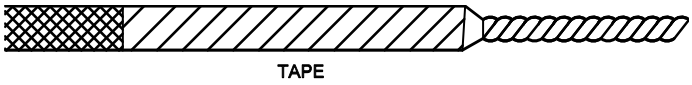

Step Q Carefully slide the plastic overbraid over the cable splice. Extend the plastic overbraid over the splice area as far as possible.

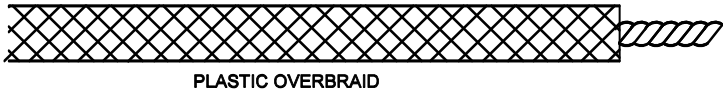

Step R Tightly tape the plastic overbraid in place, spirally, from the front end. Extend the tape just past the spliced area. The finished splice should be tapered in appearance.

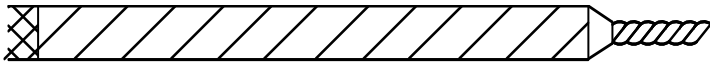

5.4 Installation of the Continuous Pull Rope

1. PermAlert recommends the installation of a continuous pull rope, free of splices between properly located and accessible pull points.
2. All sections of factory-prefabricated piping should be supplied with a factory-installed pull rope. The factory-installed ropes shall be used to pull the continuous pull rope into the air space before the secondary containment field joint closures are completed. Make sure the factory installed pull rope moves freely in each section of conduit when laying the pipe in the trench.

5 Cable Installation

3. Pulling the continuous pull rope into the air space of the secondary containment requires careful planning on the installer's part. Care must be taken during the installation of the pipe system to proceed in a manner to maintain accessibility to the factory installed pull rope.
4. The installation of the continuous pull rope and the pipe system must proceed simultaneously. Working ahead on closing the pipe system joints may prevent the successful installation of the pull rope, necessitating the reopening of a joint(s). **Avoid allowing water, mud or other debris from entering the air space.** This can prevent successful cable pulling and a functional system.
5. **Caution all workers involved in the pipe installation that the factory installed pull rope should never be "temporarily" removed with the expectation it can be replaced later.** Losing the end of the pull rope and allowing it to fall back inside the secondary containment must be avoided. Special care must be taken at risers where the weight of the rope, in the vertical section of the pipe, tends to pull the rope into the secondary containment.

Step A Splice the continuous pull rope to the factory installed pull rope. Follow splicing procedures contained in the "Cable Splices" section.

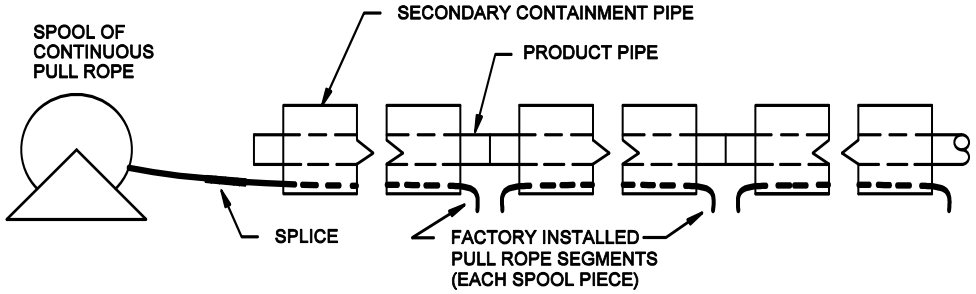

Step B Go to the first uncompleted secondary containment field joint and pull the continuous pull rope into the first section of piping until the splice exits the field joint.

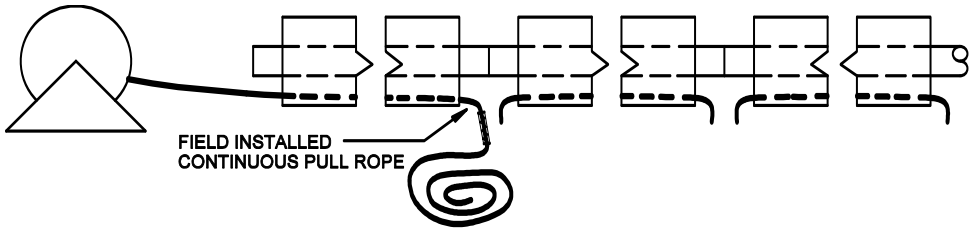

Step C Break the splice on the factory installed pull rope and discard the pull rope. Splice the continuous pull rope to the next section of factory pull rope, and pull the continuous pull rope into the next pipe

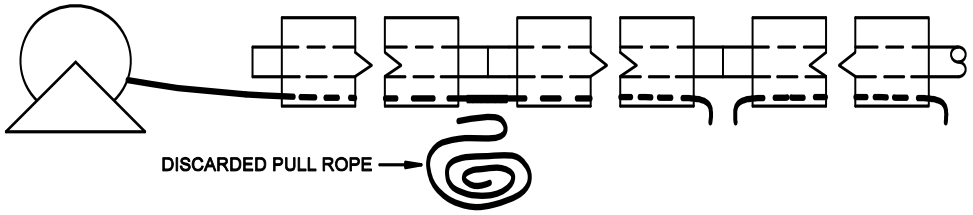

Step D Return to the first field joint. If the product pipes are insulated, apply insulation material. To prevent the continuous pull rope from being damaged during joining of the secondary containment, it must be held off the bottom of the containment. Attach the pull rope temporarily to the carrier pipe (insulation) by looping a piece of 22 gauge steel wire around the carrier pipe (insulation) and twisting the ends together to form a hook around the pull rope.

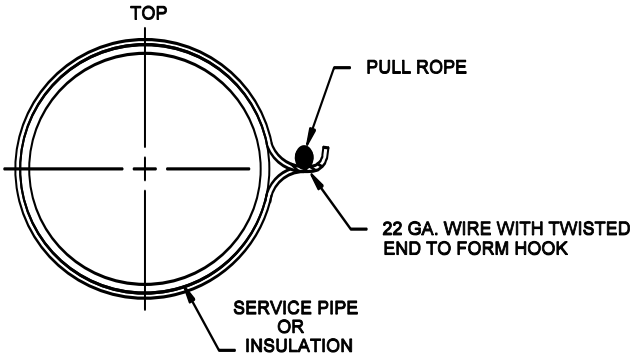

Step E The secondary containment field joint can now be made. After closing the field joint of the secondary containment, restrain the continuous pull rope at the spool end, and pull on the rope at the open field joint in order to pull the rope off the wire hook.

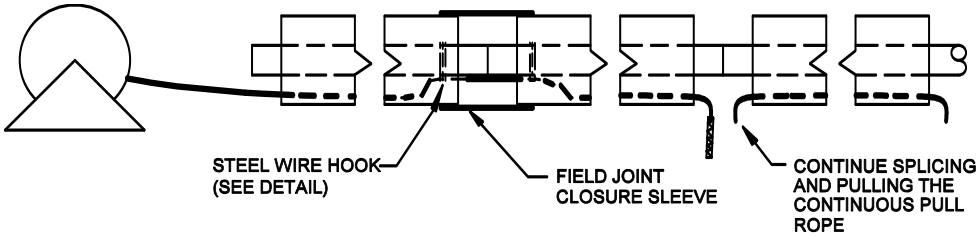

Step F Pull the continuous pull rope from the previously sealed joint to the next open field joint.

Step G Repeat the sequence of splicing, pulling and closing the field joints of the secondary containment until the continuous pull rope has been pulled through the entire piping run. Each time after completing 3 or 4 field closures, move the continuous pull rope back and forth in the containment to insure the pull rope moves freely.

5.5 Installing Sensor and Jumper Cables

1. After all other work is completed and the area is free and clear of all activities that can cause damage, the sensor cable should be installed. **Care must be taken during installation of sensor cable to avoid contact with potential contaminants such as water puddles or oil.**
2. PermAlert recommends installing the sensor cable before backfilling of underground secondary contained pipe systems.
3. **Keep the cable dry and clean.** Tent the spool area and do not install the sensor cable during a rainstorm.
4. Slowly play out the cable by hand rotating the spool. Never attempt pulling loose coils of cable off the end of the spool. When loose coils are pulled taut, kinks may form that could prevent bringing the system on-line.
5. **Always be careful to prevent the cable from falling into the secondary containment.** Be particularly careful at risers, where the weight of the cable in the vertical section of pipe tends to pull back the cable.
6. The bottom of a secondary containment that penetrates into a vault or building should be fitted with a minimum 1" [25 mm] threaded pipe coupling or similar fitting. This fitting will be located where the sensor cable enters (exits) the secondary contained piping system.
7. Check that the air spaces of secondary containment, at termination points of the piping system, are dry. Drain plugs in the containment should be provided for this purpose. If water is found, dry the system completely before attempting installation of the sensor cable.

8. Place the spool of sensor cable at the high end of the run. At this time, do not route the pull rope or cable through the junction box and conduit.
9. Splice the sensor cable to the continuous pull rope using the method described in section 4.3, "Cable Splices".
10. At least two workers are required to pull sensor cable. Work should proceed continuously from pull point to pull point. At the lowest elevation between two pull points, one person should slowly pull on the pull rope. At the higher elevation pull point, the second person should carefully play out the cable while pushing it into the interstitial air space. This push/pull action significantly reduces the pulling force required to install the cable. If a problem does arise, the workers must be able to signal each other quickly. Walkie-talkies are recommended so communication can occur to prevent cable damage.
11. **The pulling force should never exceed 50 lb [23 kg].** If a snag is encountered, carefully work the cable back and forth in an attempt to clear the cable. If the snag cannot be cleared, contact PermAlert's Field Service Department for assistance.
12. Where electrical conduit and junction boxes are required, use watertight NEMA 4X [IP66] boxes and mount per the instructions contained in this guide. Temporarily pull enough sensor cable out of the secondary containment and into the junction box (approximately 2' [600 mm]) to allow installation of cable connectors (see figure 5-2). **Make sure the bushings and cord grips are slipped on the jumper cable before installing the cable connectors.** Attach the cable connectors, test them, and push the assemblies into the electrical conduits. Thread and tighten the cord grips making a watertight seal against the jumper cable. The conduit termination points must be sealed. **Do not leave conduit termination points open, or moisture may enter and wet the sensor cable.**
13. **The ends of all cables should be kept dry during installation. If the cable ends are submerged in water, capillary action will wick water into the center conductor. This could cause corrosion and shorten the life of the cable.**
14. **If TFH cable is installed, the ends of the cable must be immediately sealed with the shrink tube caps supplied by PermAlert to prevent water from entering the cable under the jacket.** Make sure the polyester overbraid is not under the shrink cap to insure a good seal. **If water is allowed to enter the ends of TFH cable, it must be replaced.**

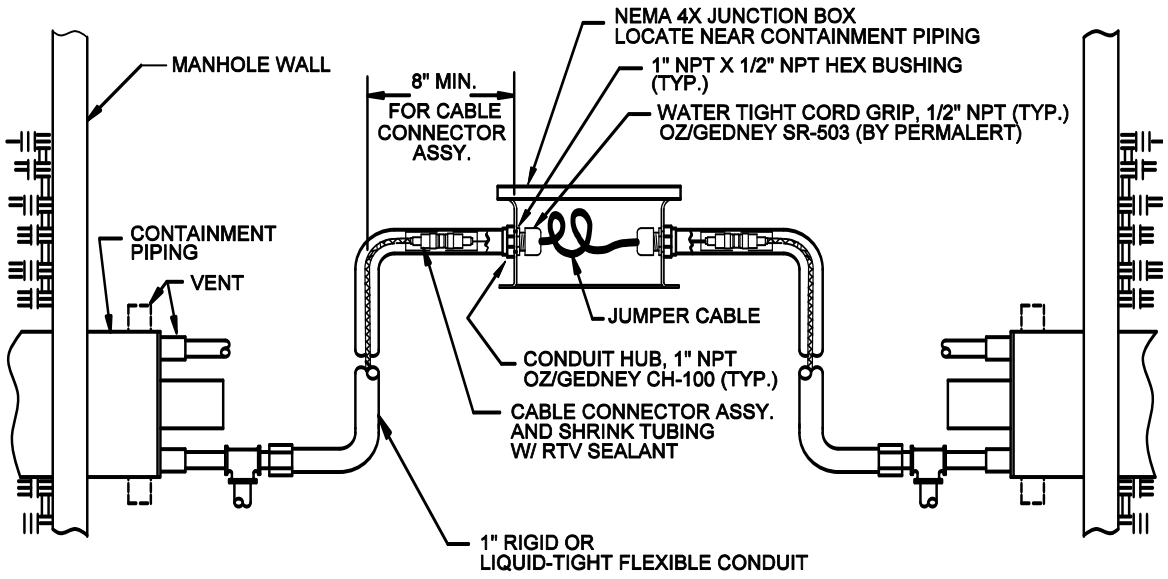

Figure 5-2
Cable Connections with Electrical Conduit and Junction Boxes

15. In contained pipe systems where branch runs and main runs are monitored, jumper cable can be used to return to the main from the branch. For these installations, PermAlert can furnish a cable routing drawing showing locations requiring the installation of sensor cable and jumper. Depending on the design of the secondary contained system and the free unobstructed air space available, both cables (sensor and jumper) may be installed in the secondary containment air space. This will require simultaneously pulling both cables, and most likely will reduce the length of cables that can be pulled at one time. When 2 cables are installed in the same air space, both cables must be pulled out of the secondary containment through the threaded coupling and finally connected together with a cable connector in either: (1) a watertight capped pipe chamber connected to the threaded coupling, as shown in figure 5-3 or (2) a NEMA 4X [IP66] junction box. This type of termination should also be accessible to allow for future maintenance. As an alternative to pulling both cables into the air space of the secondary containment, jumper cable can be routed in electrical conduit. If connectors must be used, it is recommended they be installed in accessible watertight NEMA 4X [IP66] junction boxes located at grade.

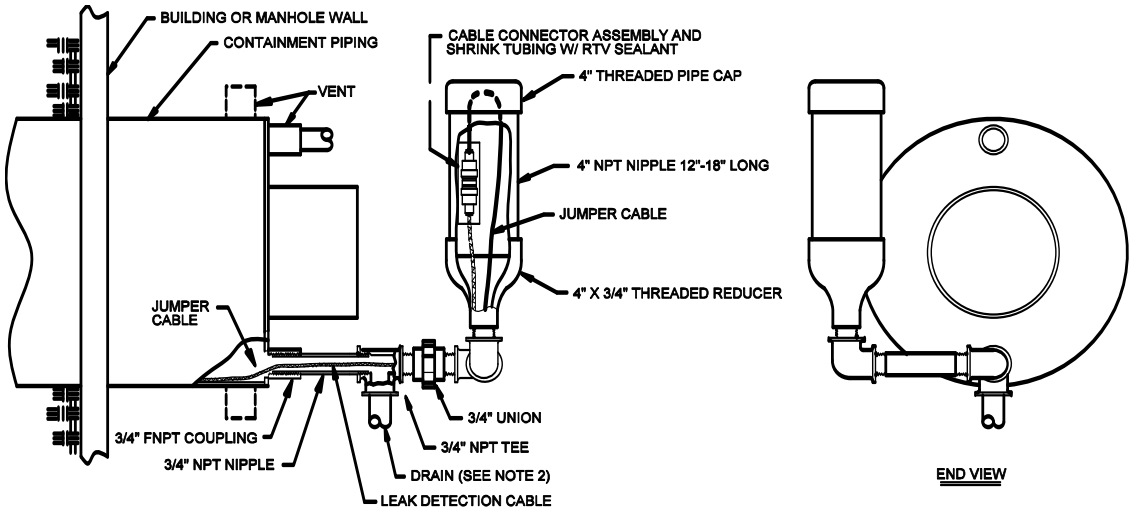

Figure 5-3
Branch Line Routing of Jumper Cable

16. At least 50' [15 m] of jumper cable must be installed from the PAL-AT panel before connection to sensor cable. Refer to table 1 (see section 3) for jumper installed at the very end of a sensing string in an enclosure (see figure 5-4). A cable connector must be attached to terminate the end of the jumper cable. Install the red plastic cap supplied with the PAL-AT, over the connector to keep it clean. The termination of the sensing string should be accessible for future maintenance.

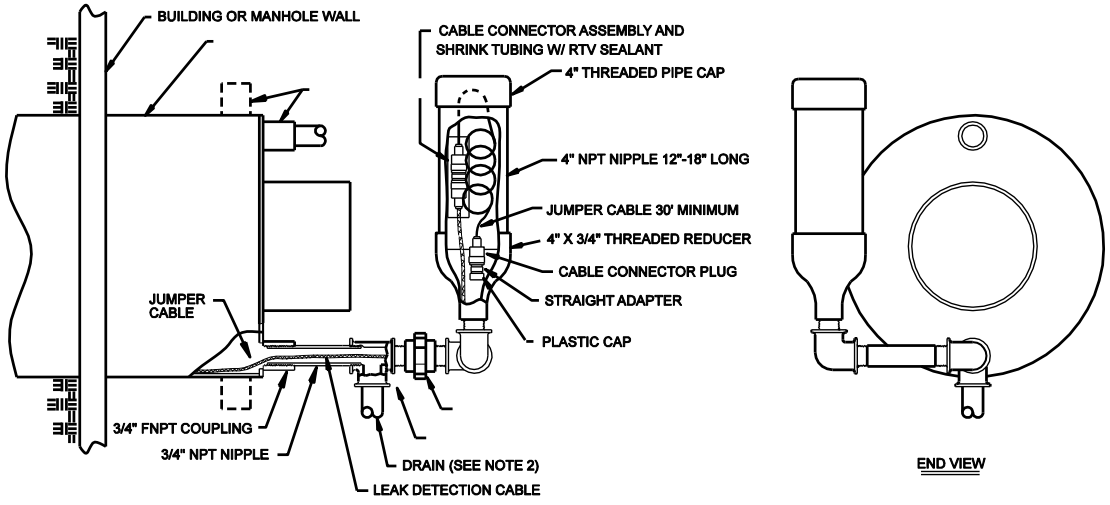

Figure 5-4
Termination of Sensing String

5.6 Air Testing

1. Air testing of the secondary containment must be performed before backfilling.
2. All sensor cable termination chambers (see figures 5-3 and 5-4) must be completely installed before applying the air test. Also, cap any open vents or drains. Be careful to prevent the pull rope or sensor cable from being blown back into the secondary containment.
3. Assemble required piping for air test and follow test procedure provided by the secondary containment piping manufacturer's installation guide.

   CAUTION: THE COMPRESSED AIR SUPPLY MUST BE FREE OF WATER AND OIL.
4. After the air test has been completed, remove test piping and cap test ports on the secondary containment.

6 Installation of Direct Buried Sensor Cable

6.1 General

The following instructions and precautions are very important for the successful installation and operation of the PAL-AT system with direct buried sensor cable. These instructions do not cover every possible situation, but are intended as guidelines for the majority of applications. Remember, the sensor cable is a sensitive electrical cable and should not be crushed, stretched, kinked, cut or damaged. If you have any questions regarding the installation of the direct buried cables, contact PermAlert. Failure to follow these instructions may result in damage to the cables or its jacket and prevent or limit operation of the PAL-AT system.

1. TFH and TFH-Gold cables are constructed of materials that detect hydrocarbon liquids, but ignore the presence of water. TFH cable has an outer jacket to protect the nickel-plated, copper braid wire. TFH-Gold cable does not have an outer jacket, but uses polymer-coated braid wire that is corrosion resistant.
2. These unique sensor cables can be installed in wet soil environments while monitoring for the leakage of hydrocarbon liquids. This feature permits direct burial of TFH/TFH-Gold, in 1½" or 2" "screened" or slotted PVC pipe, for the monitoring of underground single wall piping and tanks. The maximum burial depth of TFH/TFH-Gold cables is 20' [6 m]. This limitation is due to the fact the cable materials repel water to a maximum pressure of 8.7 psi [0.6 bar]. If the cable jacket (TFH) or cable core (TFH-Gold) is damaged, water may enter the cable and prevent or limit the operation of the PAL-AT system.
3. The location of the slotted pipe and hydrocarbon detection cable is determined by several variables. These variables include soil type, backfill material, product in the pipeline, water table, pipeline pressure and leak rate. Another consideration is if the installation is new or a retrofit of an existing pipeline.
4. It is recommended to slide a fabric sleeve or sock liner over the slotted PVC pipe to minimize soil entering and possibly blocking the pipe after an extended time. A 3" sleeve is typically available in home improvement stores and other sizes are available at industrial sources.
5. The sensor cables must be located where the hydrocarbon liquids will collect and allow detection. For some applications, the use of a closed synthetic liner, installed in the pipe trench, may be considered to facilitate the collection of hydrocarbon liquid for detection and reduce soil contamination. Normally one cable located in a slotted pipe adjacent to an underground pipe will provide satisfactory results. The slotted pipe may be located under the service pipe for a new installation. If the system is installed with an existing pipeline, the slotted pipe can be installed a few inches to the side of the pipeline to minimize the excavation cost.

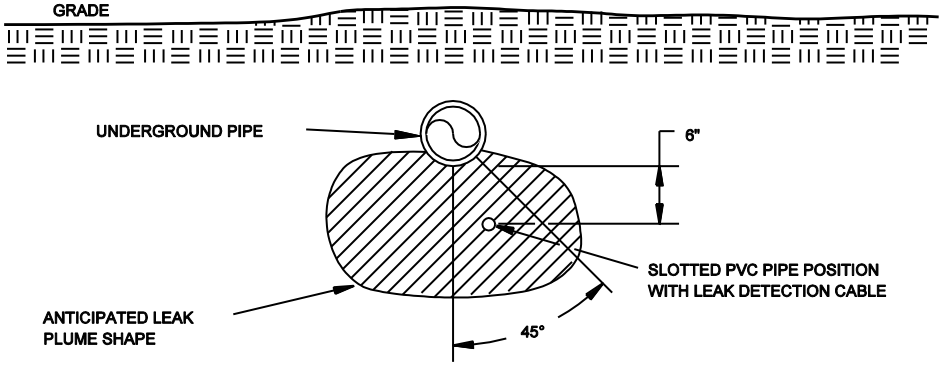

6. If buried TFH/TFH-Gold is submerged in water and the water freezes, the resulting compression of the cable may be detected as a leak and cause an alarm. This effect should be considered when determining the placement of the cable to reduce false alarms. It does not damage the cable.
7. **The recommended minimum bend radius for all sensor and jumper cables is 1.5" [38mm].**

8. If a synthetic liner is not installed under the slotted pipe, a compacted clay/silt base layer should be used under the pipe to minimize the vertical migration of a leak. The slotted pipe should be covered with backfill material of sand or soil.
9. It is recommended to have 12" [300 mm] inches of backfill installed and compacted with hand tampers above the slotted pipe before mechanical compactors are used, to prevent crushing the pipe.
10. During the storage and installation of TFH cable, the ends of the cable must be protected to keep water from entering. The cable is shipped with shrink tube caps on the ends. Additional caps are supplied with TFH connectors to be installed on the cable temporarily until the connectors are installed. The caps should be installed over the jacket, but under the outer plastic overbraid of the cable. The cable ends should not be immersed in water at any time, even with the shrink caps installed. After the connectors are installed, if there is any possibility of water contacting the connectors, they should be sealed with non-corrosive RTV and shrink tubing immediately. If the connector needs to be reopened later for calibration, slit open the outer shrink tubing. Replace it with a new shrink tube immediately after calibration. Shrink tube caps are not required for TFH-Gold.
11. The sensor cable must be protected from damage when it is in the trench before backfilling. The cable must be protected when pipes are being welded or other work is occurring nearby. The cable should not be stepped on.
12. All connectors of sensor cable must be located in junction boxes at or above grade. A vertical riser of PVC conduit or other material suitable for the project must be installed to provide protection to the cable through the backfill and into the junction box (see figure 6-1). Follow the instructions for installing cable connectors using shrink tubing and RTV sealant to insure a watertight assembly.

CAUTION: It is extremely important to prevent damage to the TFH cable jacket. A damaged cable must be replaced.

6.2 Installing the Sensor Cable

1. After all other work is completed and the area is free and clear of all activities that can cause damage, the sensor cable should be installed.

Care must be taken during installation of sensor cable to avoid contact with potential contaminants such as oil, hydrocarbon liquid, soap or other material that may contain surfactants. Contamination by any of these liquids will destroy the water repellency of the cable and it will need to be replaced.

2. When the construction schedule allows, the PAL-AT panel should be permanently mounted and connected with electrical power before installing jumper or sensor cable. This will allow the system's setup and calibration procedures to proceed efficiently. For additional information on calibration points, refer to the *PAL-AT Operating Manual*.
3. Slowly play out the cable by hand rotating the spool. Never pull loose coils of cable off the end of the spool. When loose coils are pulled taut, kinks form in the cable that could prevent bringing the system on-line. Protect open ends of the cable from damage, contaminants and moisture.
4. Starting from the panel, connect a minimum of 50' [15 m] of jumper cable before connecting the sensor cable. Route the sensor cable as shown on the contract drawings. Refer to table 1 (see section 3) for amount of jumper cable to be connected to the end of the sensing string.
5. Make sure all TFH cable ends are sealed with shrink tubing after installation.

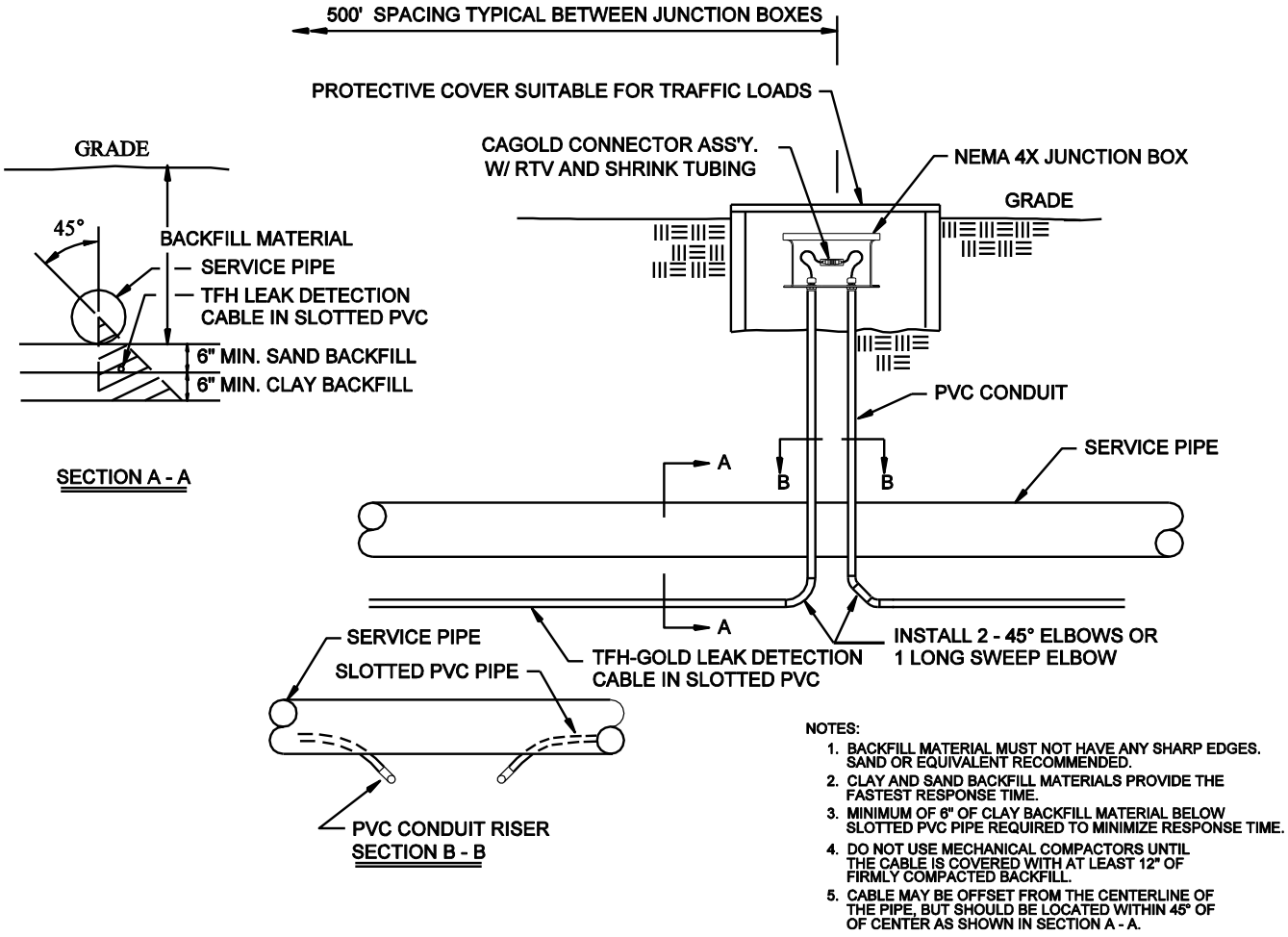

Figure 6-1
Direct Buried TFH/TFH-Gold Hydrocarbon Sensor Cables

6 Direct Buried Sensor Cable

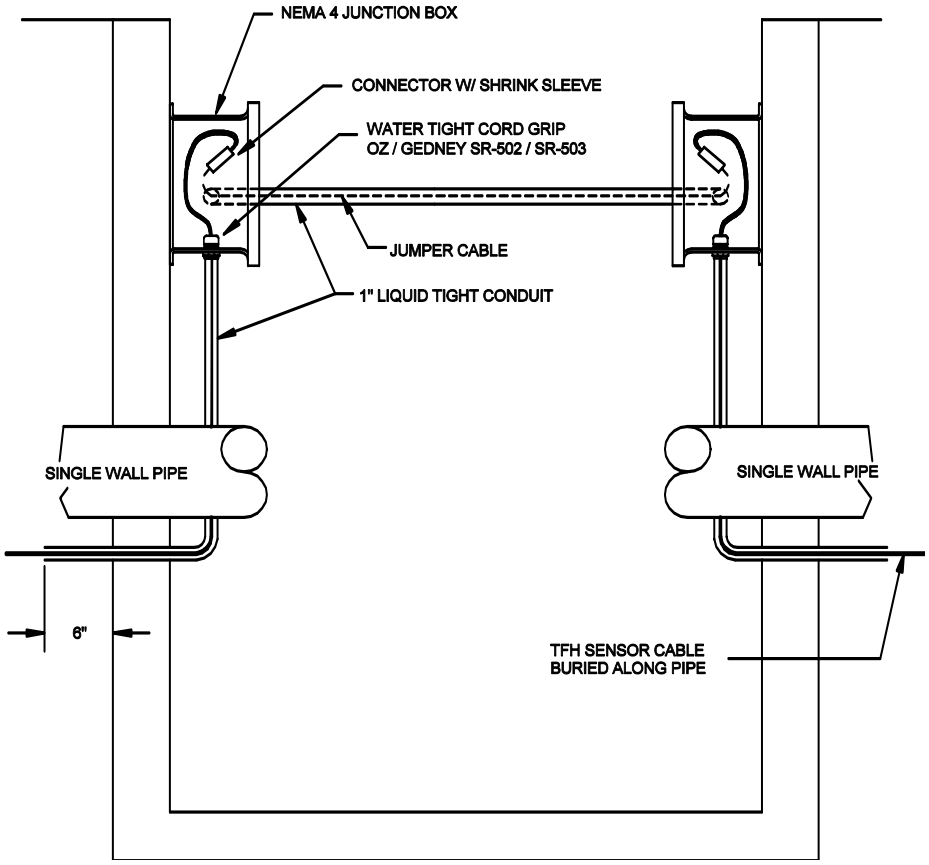

Figure 6-2
Hydrant Valve Pit / Manhole Penetration
Direct Buried Cable

6.3 Above Ground Storage Tanks

Above ground storage tanks can be monitored for leaks by installing TFH/TFH-Gold sensor cable in slotted PVC pipe under the bottom of the tank or around the perimeter. Figures 6-3 and 6-4 show two such applications. For specific applications, contact PermAlert for assistance.

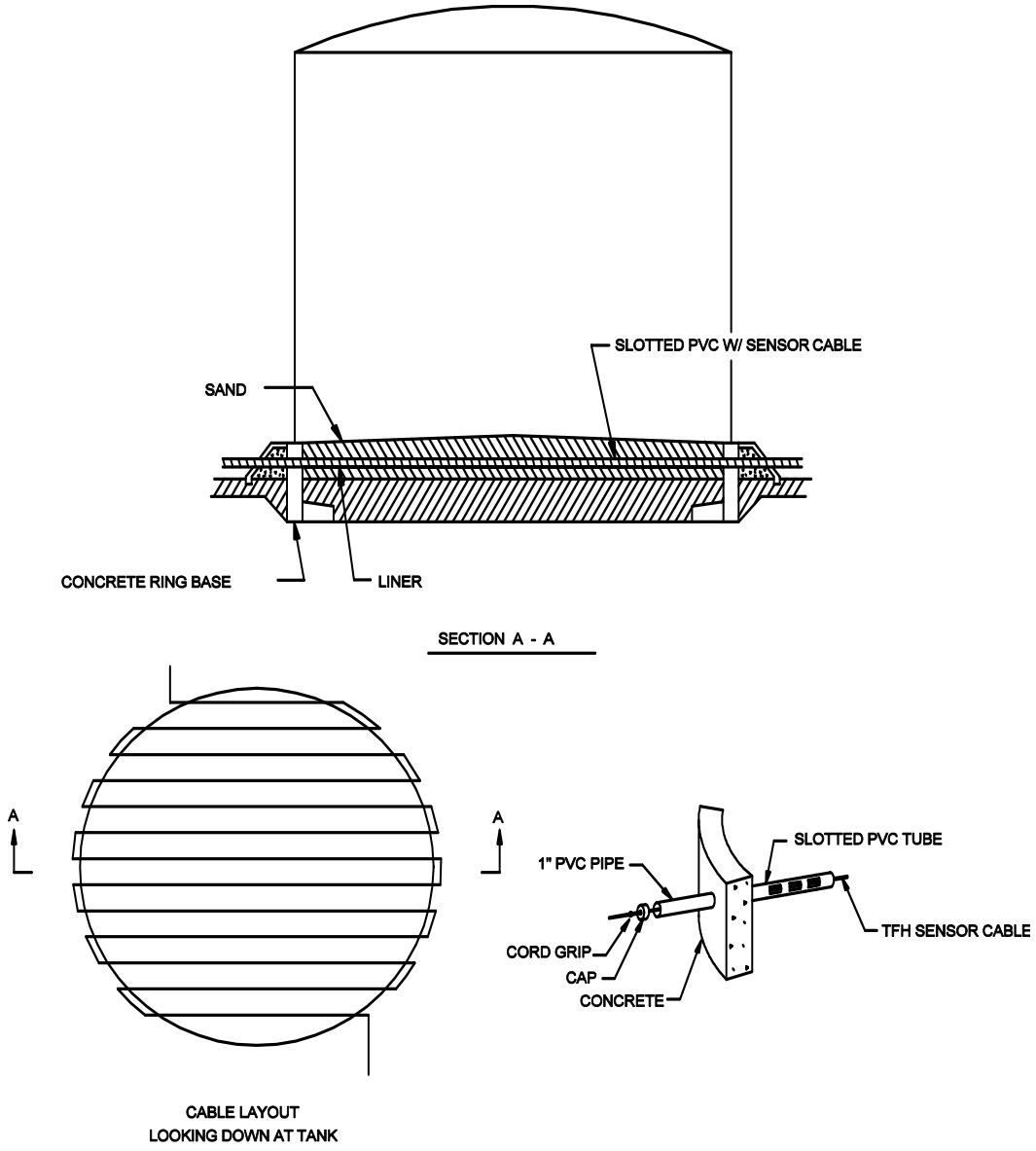

Figure 6-3
Double Bottom Above Ground Storage Tank

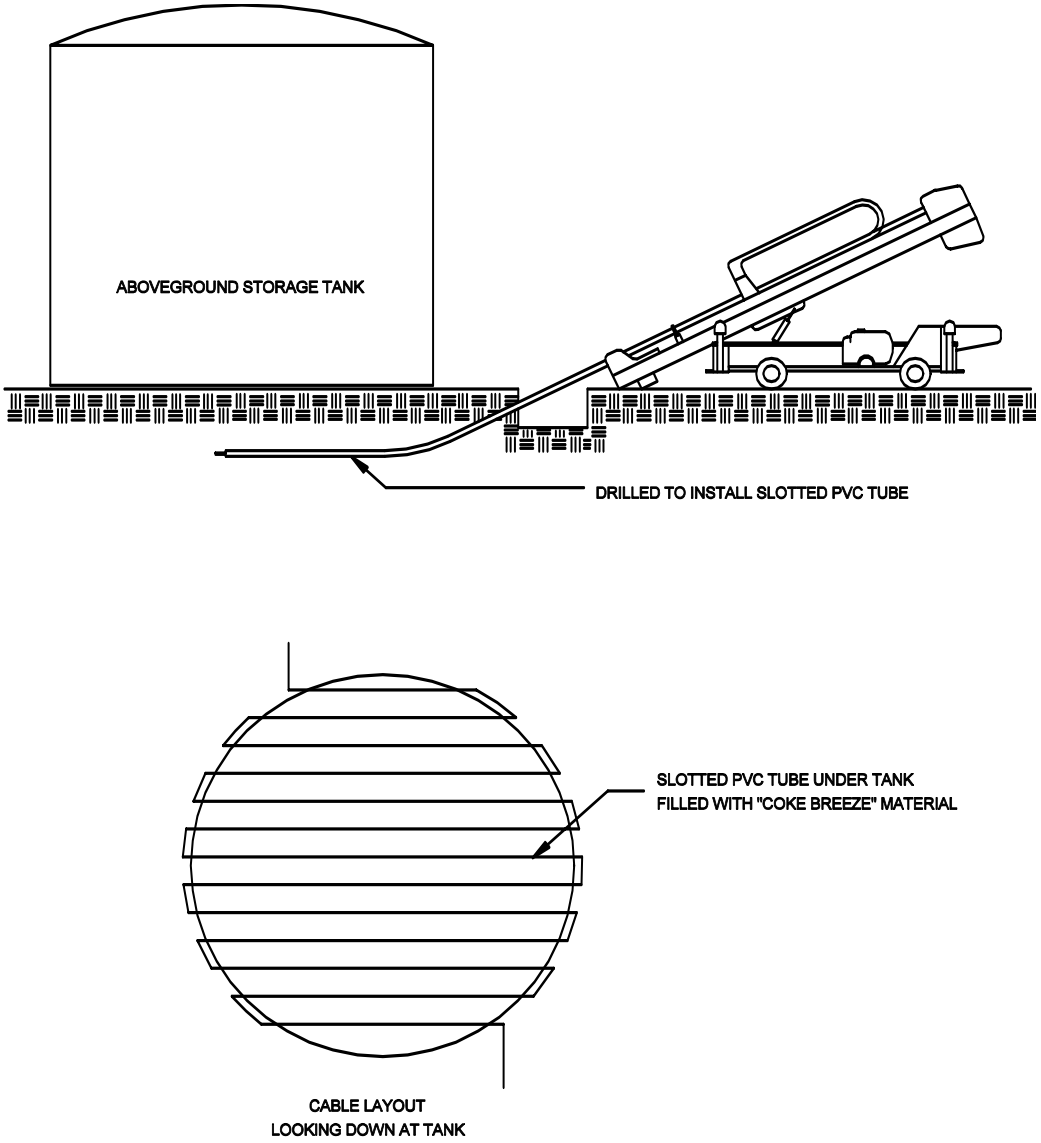

Figure 6-4
Above Ground Storage Tank Horizontal Drilling

7 Cable Installation for Raised Floor Areas

7.1 General

The PAL-AT sensor cables can be installed in ceilings or on subfloors below raised flooring to detect water, hydrocarbons, or chemical liquids. AGT-Gold responds quickly to thin films of liquid. AGW-Gold allows a small accumulation before detecting a leak and dries quickly after removal of the liquid. AGW-Gold was tested and passed UL910 for Plenum applications. AGW-Gold is the preferred selection unless the application requires wicking of the liquid for detection of small liquid leakage.

The AGT-Gold sensor cable has a polypropylene yarn dielectric and is designed to absorb liquids readily and detect leaks quickly. It also absorbs moisture from the air if the air is saturated or near saturation. PermAlert recommends a maximum of 80% relative humidity, keeping in mind the relative humidity will increase if the temperature of the air or a surface in the airflow decreases. In subfloor applications, care must be taken to make sure the cable is not located directly in the airflow where localized higher humidity or saturated air is present.

If the humidity level cannot be controlled and intermittent high humidity conditions exist, then the best option is to use the quick-drying AGW-Gold cable in place of the wicking AGT-Gold cable.

7.2 Install the Sensor Cable

1. After all other work is completed and the area is free and clear of all activities that can cause damage, the sensor cable should be installed. Care must be taken during installation of the sensor cable to avoid contact with potential contaminants, such as water puddles or oil.
2. When the construction schedule allows, the PAL-AT panel should be permanently mounted and connected with electrical power before installing jumper or sensor cable. This will allow the system's setup and calibration procedures to proceed efficiently. For additional information on calibration points, refer to the *PAL-AT Operating Manual*.
3. Slowly play out the cable by hand rotating the spool. Never pull loose coils of cable off the end of the spool. When loose coils are pulled taut, kinks form in the cable that could prevent bringing the system on-line. **Keep the cable dry and clean.**
4. Starting from the PAL-AT panel, connect a minimum of 50' [15 m] of JMP-UD jumper cable (65' [20 m] for type JPP) before connecting the sensor cable. Route the sensor cable as shown on the contract drawings. Most designs require the sensor cable to be installed in a serpentine pattern of 4' [1.2 m] centers. Normally, this method gives satisfactory protection and does not require the cable to be repositioned when equipment is moved later. Typically, centers of 6’ to 12’ [2 m to 4 m] can be used if the facility has low risk (see figure 7-1).
5. If the serpentine pattern cannot be adapted to the installation, an alternative is to isolate the potential leakage areas. Typically, this means running the sensor cable around the perimeter of the room and placing a run of cable under or near any water lines or drains in the room's interior. The sensor cable should be routed around air conditioning units and chillers so an overflow from a plugged condensate tray must pass the sensor cable before it can reach power or data cables.
6. The sensor cable should not be routed directly in the airflow from an air-handling unit, especially if a humidifier is being used. In this case, the unit may send out drops of water that can collect in the cable and give an alarm for a minor puddle.

   This is more critical with AGT-Gold cable. The wicking nature of the cable will absorb the fine spray from the humidifier and cause an alarm. Typically, the cables are 3' to 5' from the perimeter of the air units.
7. Refer to table 1 (see section 3) for amount of jumper cable to be connected to the end of the sensing string.
8. Cables are attached to the subfloors and ceilings with fasteners (cable mounts). Normally, cable mounts are spaced on 8' [2.5 m] intervals along the sensor and jumper cable length. Additional cable mounts are located adjacent to all changes in direction of the sensor cable.

9. Cable mounts (CMA) ordered from PermAlert are adhesive backed. When installations require mounting to unsealed concrete surfaces, it is recommended construction mastic be used. Care must be taken to ensure the mastic does not touch the sensor cable. This material can be purchased from most supply houses. Inspect subfloor (or ceiling) surfaces to be sure it is clean and dry before beginning installation. Cable tags (CTA) are typically installed on 50' [15 m] intervals for location purposes.
10. In high traffic areas, cable shields should be used to protect the cable from damage.
11. Service loops (slack cable) should be positioned at connector locations.

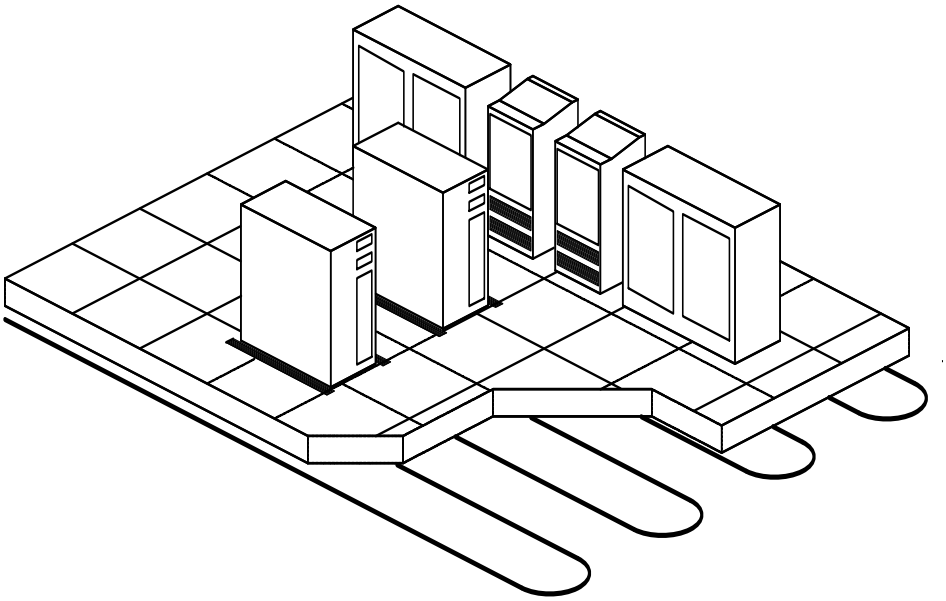

Figure 7-1
Computer Room Floor

7.3 Locator Chart

A graphic display map drawn to scale shall be prepared by the contractor (installer) after completion of installation from "as built" drawings. The map shall indicate, in relation to the raised floor grid, the location of the cable, connectors, and landmarks (such as equipment, walls, and drains). Cable distance readings shall be marked off in 100' [30 m] (or other suitable) increments, beginning at the monitoring panel, to facilitate physically locating a leak detected by the system. The locator chart should be placed in a plastic frame suitable for permanent mounting adjacent to the PAL-AT panel.

8 Cable Connectors

8.1 General

This section outlines: (1) the installation procedures for several types of connectors; (2) the application of shrink tubing; and (3) the electrical testing of connectors and cable. **All connectors are crimp style and soldering is not required**.

Instructional videos for Cable Connector Installations are available at the PermAlert web site, www.permalert.com.

WARNING For Hazardous Locations – Some cable connectors are located in NEMA 4X [IP66] junction boxes that are made of plastic and as such, present a possible electrostatic hazard. They are not intended to be cleaned, but if they are, a damp cloth should be used**.**

8.2 Cable Connector Installation

1. Cable connectors must be installed at changes of cable types, pull points, junction boxes, calibration points, and at the termination of the sensing string.
2. All the PAL-AT cables, except ATP, are coaxial construction consisting of an insulated center conductor and a braid shield. Jumper cables and TFH sensor cable have a polymer jacket over the braid. All coaxial sensor cables also have a polymer overbraid surrounding the cable.
3. **Crimp style connectors are required for all sensor cables and all jumper cables**.
4. **TFH sensor cable ends must be kept dry and encapsulated in shrink tubing until the connectors are installed. Connectors that become calibration points during the commissioning of the system should not be installed prior to commissioning, if they cannot be kept dry. Install the shrink tube caps, included with the connectors, on the end of the cables temporarily.**

8.2.1 CAGOLD and CATFH Connectors for Sensor Cables AGW-Gold, AGT-Gold, TFH-Gold and TFH

The CAGOLD connector assembly for AGW-Gold, AGT-Gold and TFH-Gold consists of two crimp style UHF plugs, two #14 AWG wire ferrules, one UHF straight adapter, and one piece of shrink tubing. The CATFH assembly for TFH includes the same connectors and 3 pieces of shrink tubing. Steps A thru I must be followed to install a connector.

Step A Measure and cut the required length of cable.

Step B Carefully cut and remove 2½" [65 mm] of the plastic overbraid. It may be helpful to slide the remaining overbraid back several inches and use electrical tape to hold it in place out of the way.

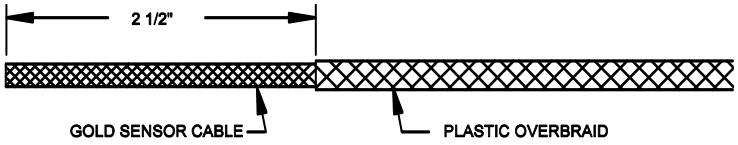

TFH cable has a white outer jacket under the overbraid. Remove 2 ½" [65 mm] of the white jacket.

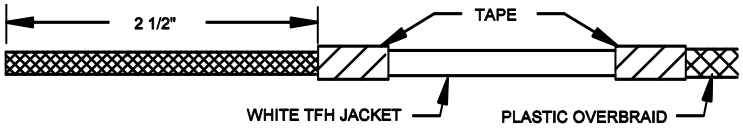

Step C Skip this step for TFH cable. A sanding tool (included with the purchase of a crimp tool) is inserted into the cable. The tool is a 6" [150 mm] length of stainless steel tubing.

For AGW-Gold, insert the center conductor and two plastic spiral spacers into the end of the tool. Then slowly rotate the tool counterclockwise and gently push the tool 3" [75 mm] into the cable underneath the braid wire.

For TFH-Gold, insert the center conductor and the white core into the end of the tool. Then slowly rotate the tool and gently push the tool 3" [75 mm] into the cable underneath the braid wire.

For AGT-Gold, slide the braid wire back 2" [50 mm] and remove 1 7/8" [47 mm] of the yarn spacer. Then insert the sanding tool 3" [75 mm] over the center conductor and slide the braid wire back over the tool.

For all three cables, hold the end of the braid in place against the sanding tool while you sand the 1¼" [32 mm] area as shown below. Rotate the cable slightly and repeat the sanding process until the entire circumference of the 1¼" section has been sanded. The gold-colored plastic coating on the braid strands does not have to be removed completely. However, the outer surface of the braid strands should have bare copper exposed around the entire circumference of the cable.

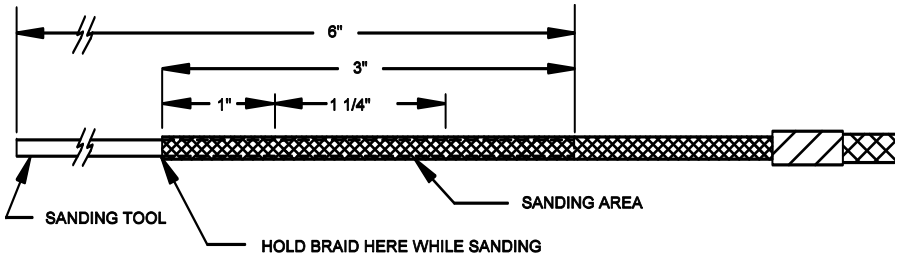

Step D Carefully cut and remove approximately 1¼" [32 mm] of braid (this should remove all the unsanded braid wire). Tap the cable gently on a hard surface to knock off loose strand ends, clippings and any debris.

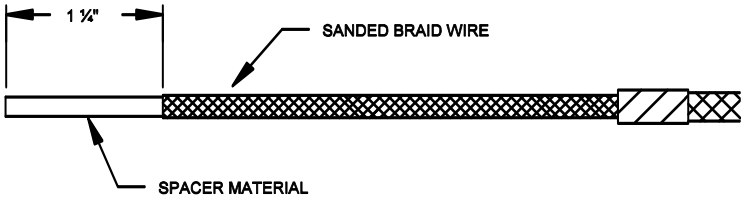

Step E For AGW-Gold and TFH cables, slide the braid back an additional ¾" [19 mm] then remove 1 7/8" [47 mm] of spacer material (plastic spiral on AGW-Gold and white core on TFH).

Or

For TFH-Gold cable, the white core needs to be "thinned" for 1 7/8" [47 mm] to reduce the diameter of the white core slightly so it fits into the connector body. This requires a wire stripper tool set for #10 AWG. First, make sure the center conductor is straight so the thin film of insulation on the conductor is not nicked. Starting ½" from the end, strip the wire using the #10 setting. This does not remove the white core, but stretches it and makes it smaller in diameter. Continue this process, moving in ½" increments from the end. Each time apply the tool and strip to the end of the cable, until the insulation over the last 1 7/8" of the conductor is thinned. Cut off the white material that was stretched past the end of the center conductor. Next, using a #14 AWG wire stripper, strip ¾" of the white core from the center conductor.

For all cables, remove ¾" of the thin film of insulation from the center conductor.

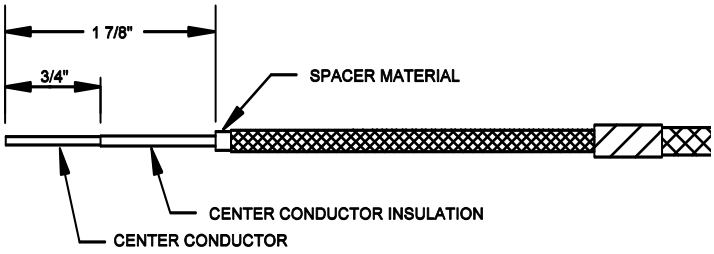

Step F For TFH cable only, slide one 4" [100 mm] piece of heavy wall shrink tubing over the end of the cable, and position it over the overbraid.

For all cables, slide the UHF plug coupling ring onto the cable. Then slide the outer crimp ferrule onto the cable.

A ¾" [19 mm] long, #14 AWG [1.5 mm^2] wire ferrule should be installed on the center conductor. If the wire ferrule is slightly crushed, the conductor will not slide in easily. If this happens, push the ferrule onto a piece of solid #14 AWG copper wire (or standard 3d finish nail) to straighten the ferrule. Slide the ferrule over the conductor until it stops at the center conductor insulation. Make sure all the strands go through the ferrule and extend out of the end.

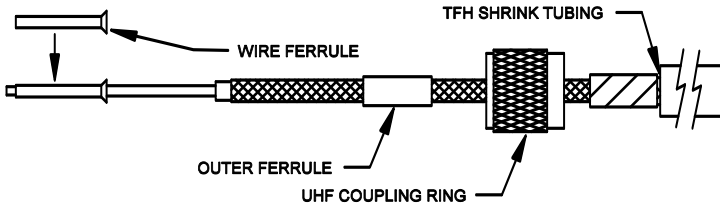

Step G Slide the UHF plug body over the cable center conductor. Be sure all the strands of the center conductor or the wire ferrule slide completely through the center contact of the plug. At the same time, slide the braid over the inner ferrule to the UHF plug body.

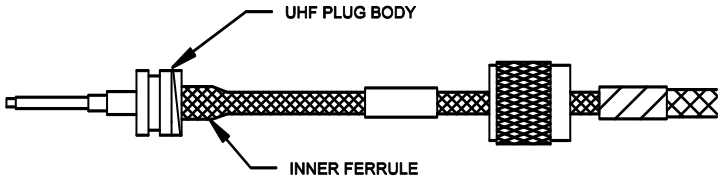

Step H Slide the outer ferrule over the braid and up against the UHF plug body. Make sure the braid extends slightly past the end of the outer ferrule against the UHF plug body. **Caution: Once the crimp tool (PermAlert Part No. 8068301) starts to close, it must be closed completely before it will open again.** Position the crimp tool (0.255" die) carefully around the outer ferrule and crimp it.

Crimp the end of the center contact as shown using a 0.100" die. Leave a 1/8" [3 mm] gap from the end of the plug and trim the excess center conductor and ferrule.

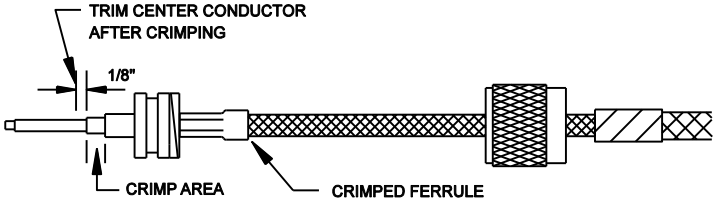

Step I Slide the plastic overbraid as close to the UHF plug body as possible to remove any slack. Trim it so there is approximately a 1" [25 mm] gap between the end of the overbraid and the end of the ferrule.

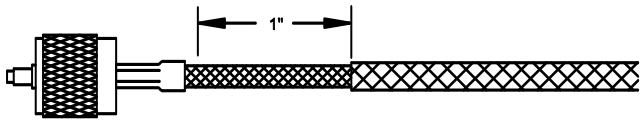

Test all connections as described in the "Cable and Connector Testing Procedures" section. Each end of the cable in the stage shown above will be fastened together by using one UHF straight adapter. All cable connectors should be encapsulated with non-corrosive RTV sealant and shrink tubing.

8.2.2 CAJMP Connectors for Jumper Cables JMP-U/-UD

The CAJMP connector assembly for JMP-U/-UD jumper cables consists of two crimp style UHF plugs and one UHF straight adapter. It also includes 2 pieces of shrink tubing and spiral cable wrap. Steps A thru H must be followed to install a connector.

Step A Measure and cut the required length of cable.

Step B Carefully cut and remove 1 5/8" [41 mm] of the outer jacket, 3/4" [19 mm] of the braid and 3/4" [19 mm] of the plastic dielectric core. JMP-U has a sticky water-blocking material on the braid. To make handling it easier, keep your fingers and tools damp with water.

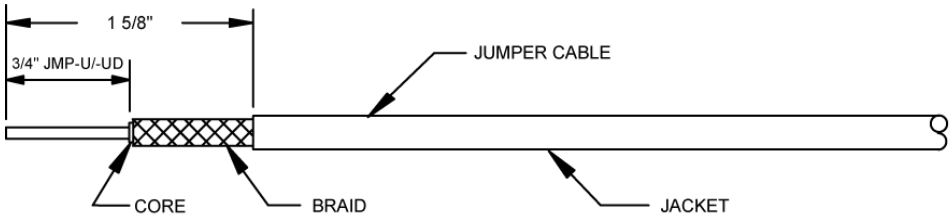

Step C Slide the 3" [75 mm] piece of shrink tubing onto the cable. Next, slide the UHF coupling ring and the outer ferrule onto the cable.

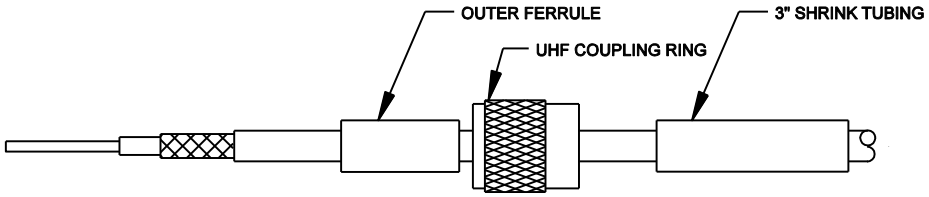

Step D Slide the UHF plug body over the cable center conductor. Be sure all the strands of the center conductor slide completely through the center contact of the plug. At the same time, the plastic core should fit inside the inner ferrule of the plug body and the braid should go over the outside of the inner ferrule. When the cable is inserted properly, 1/8" [3 mm] to 3/8" [9 mm] of the center conductor will extend past the end of the UHF plug body and **the plastic core will be tight against the plug body inside the inner ferrule**.

Note: Before installing JMP-U/-UD, flair the braid wire I.D. slightly with a small 1/8" [3 mm] slotted screwdriver so the braid will slide over the inner ferrule. **Be careful to keep the wire braided, i.e. two strands thick, over the inner ferrule, to have the correct thickness for a good crimp**.

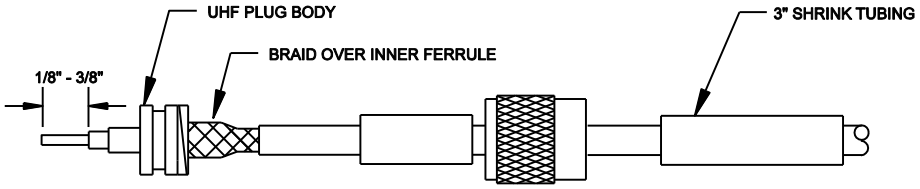

Step E Slide the outer ferrule over the braid and up to the UHF plug body. Make sure the braid extends slightly past the end of the outer ferrule against the UHF plug body. **The center conductor should extend at least 1/8" [3 mm] past the end of the connector**. **Caution: Once the crimp tool (PermAlert Part No. 8068300) starts to close, it must be closed completely before it can be opened again**. Position the crimp tool 0.429" die carefully around the outer ferrule and crimp it.

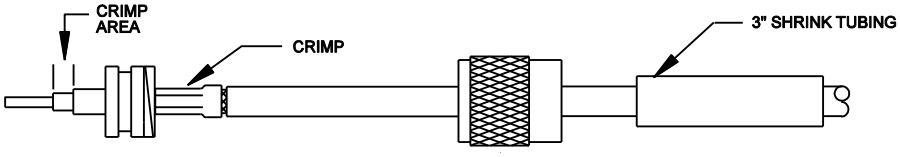

The procedure for crimping the center conductor requires a short length of #14 AWG solid copper wire to fill the center contact of the connector. Strip 3/8" of insulation from the wire. Bend the end of the strands of the center conductor slightly to the side. Next, carefully slide the bare #14 AWG wire all the way into the center contact as shown. The #14 wire should be inserted next to the JMP-U conductor and not into the strands of the conductor. Be careful so the strands of JMP-U do not slide into the connector with the #14 wire. Crimp the center contact as shown using a **0.100" die**.

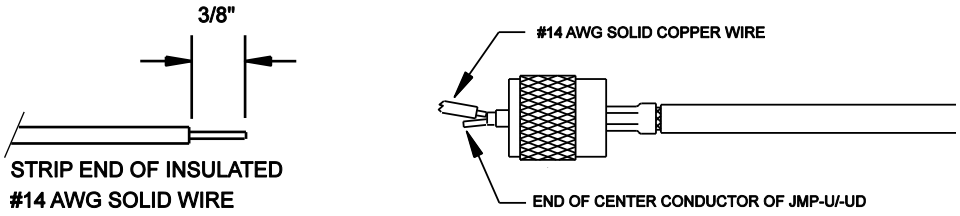

Step F Trim any center conductor (and #14 AWG wire, if applicable) extending out of the center contact of the plug. Thread the UHF coupling ring onto the UHF plug body.

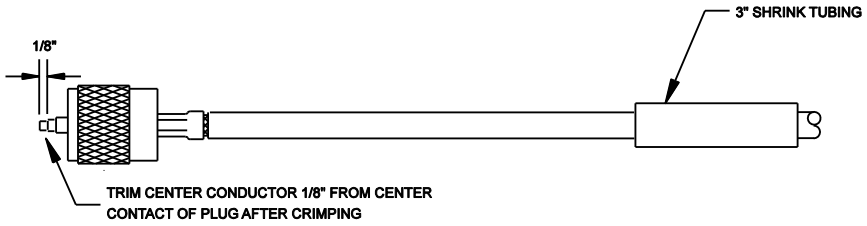

Step G Place a 2" piece of plastic cable wrap around the cable jacket and slide it under the uncrimped end of the outer ferrule as far as possible.

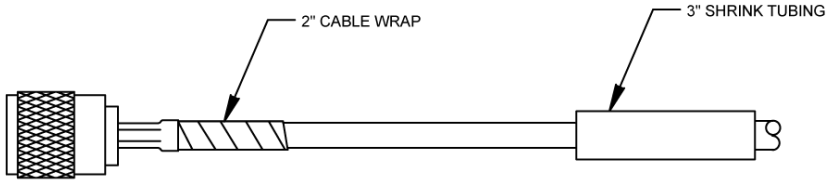

Step H Slide the 3" [75 mm] piece of shrink tubing over the crimped outer ferrule until it completely covers the ferrule. Make sure the shrink tubing does not slide onto the plug body. Heat the shrink tubing with a heat gun until it has fully shrunk and adhesive oozes out the end. Let the assembly cool before handling.

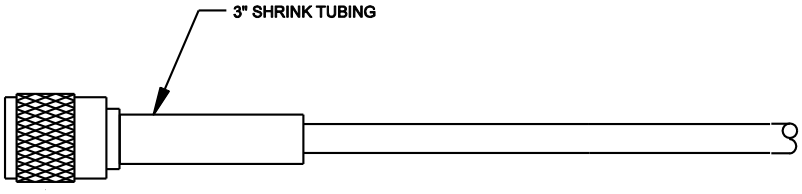

Test all connections as described in the "Cable and Connector Testing Procedures" section. Each end of the cable in the stage shown above will be fastened together by using one UHF straight adapter. All cable connectors should be encapsulated with non-corrosive RTV sealant and shrink tubing.

8.2.3 CAJPP Connectors for Jumper Cables JPP and JMP

The CAJPP connector assembly for JPP and JMP jumper cables consists of two crimp style UHF plugs and one UHF straight adapter. Steps A thru F must be followed to install a connector. It is recommended to use Ideal Stripmaster® Model 45-091 or 45-092 wire strippers, or equal, for stripping the wires. Use the die openings for stranded wire for the wire size specified in the steps below.

Step A Measure and cut the required length of cable. The connector components are shown below.

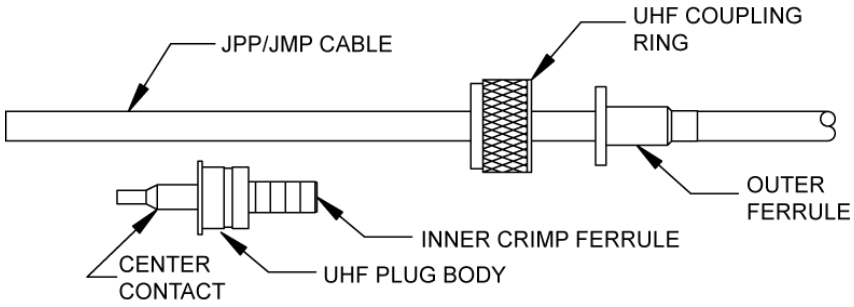

Step B Carefully mark the cable jacket at 3/8", 3/4" and 1 5/8" from the end.
At the 3/8" mark, strip the wire with the 14 AWG stripping hole. You may need to repeat the strip with the 16 AWG stripping hole to remove all the core insulation.
At the 3/4" mark, strip the wire with the 12 AWG stripping hole to remove the braid.
At the 1 5/8" mark, strip the wire with the 10 AWG stripping hole to remove the jacket.

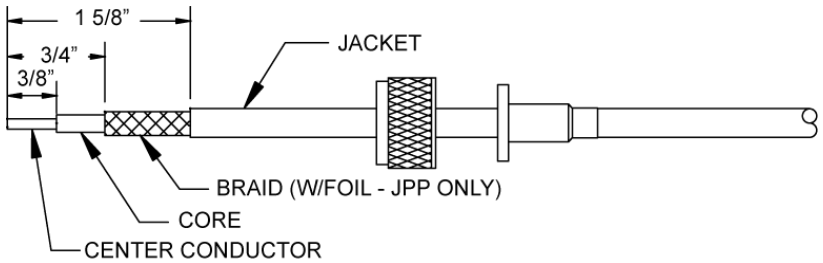

Step C **JPP only -** JPP has foil wrapped under the braid and bonded to the core insulation. Slide the braid back to the jacket to expose the foil. Use long nose pliers with serrated grip surfaces and gently squeeze the foil near the end of the core. Gently rotate the pliers back and forth 10° - 30° several times until the foil breaks free from the core. Unwrap the foil and remove it. This step may need to be repeated to remove all the foil under the exposed braid.

Step D Slide the UHF plug body over the cable center conductor. Be sure all the strands of the center conductor slide completely through the center contact of the plug. At the same time, the plastic core should fit inside the large section of the center contact and the braid should go over the outside of the inner ferrule. When the cable is inserted properly, 1/16" [1.5 mm] to 1/8" [6 mm] of the center conductor will extend past the end of the UHF plug body and the plastic core will be inside the center contact. **Caution: Once the crimp tool (PermAlert Part No. 8068300) starts to close, it must be closed completely before it can be opened again**. Crimp the center contact in the crimp area using a 0.068" die.

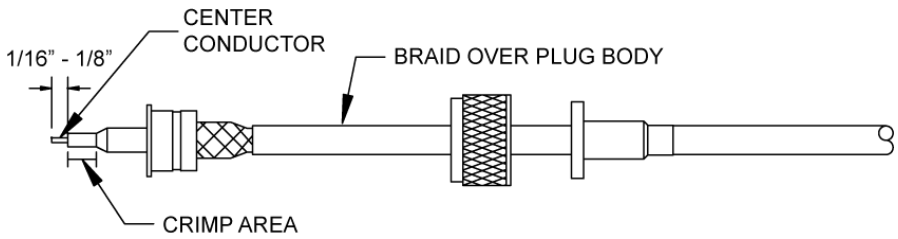

Step E Slide the UHF coupling ring onto the plug. Slide the outer ferrule (and the remaining foil, if any, for JPP cable) over the braid and up to the UHF plug body. Make sure the braid extends slightly past the end of the outer ferrule against the UHF plug body. Position the crimp tool 0.255" die carefully around the outer ferrule. Hold the outer ferrule tight against the plug body and crimp it. The UHF coupling ring is now captive and cannot be removed from the plug body.

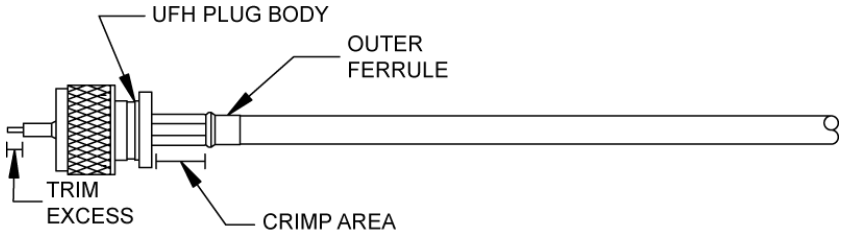

Step F Trim any center conductor extending out of the center contact of the plug.

Test all connections as described in the “Cable and Connector Testing Procedures” section. Each end of the cable in the stage shown above will be fastened together by using one UHF straight adapter. All cable connectors should be encapsulated with non-corrosive RTV sealant and shrink tubing.

8.2.4 CAGOLD Connector for ATP Cable

The CAGOLD cable connector can be used at a calibration point to make it reusable, instead of the standard permanent crimp connector. Steps A thru G must be followed to install a connector.

Step A Make sure the red and white wires are twisted with an approximate 2”–3” [50mm-75mm] pitch and then cut off excess ATP cable. Slide the UHF coupling ring onto the cable, followed by the outer ferrule.

Step B Remove ½” [12 mm] of the insulation on the red wire.

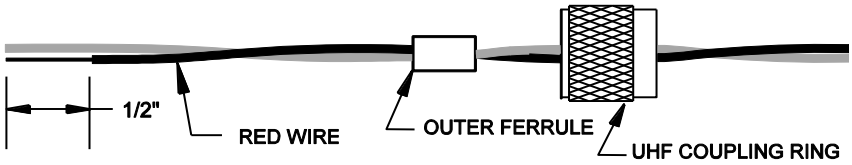

Step C As a measuring guide, slide the plug body onto the red wire until it stops against the wire insulation. The wire should extend out of the center contact. Cut the white wire even with the shoulder of the plug body. Remove the plug body and strip ½” [12 mm] of the insulation from the white wire.

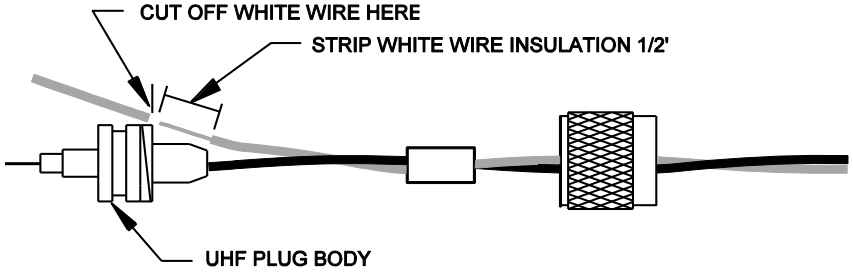

Step D Slide the plug body on the red wire again until the white wire is just past the tapered end of the inner ferrule. Then slide the outer ferrule over the end of the inner ferrule and the white wire until it is a snug fit.

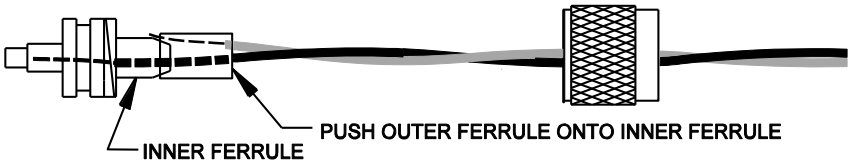

Step E Next, take the crimp tool and clamp the 0.255” die around the twisted wires behind the outer ferrule. Be careful not to pinch the wires. They should slide freely through the die. Then push the plug body toward the crimp tool to force the outer ferrule and white wire to slide over the inner ferrule until they are tight against the plug shoulder as shown in the second view.

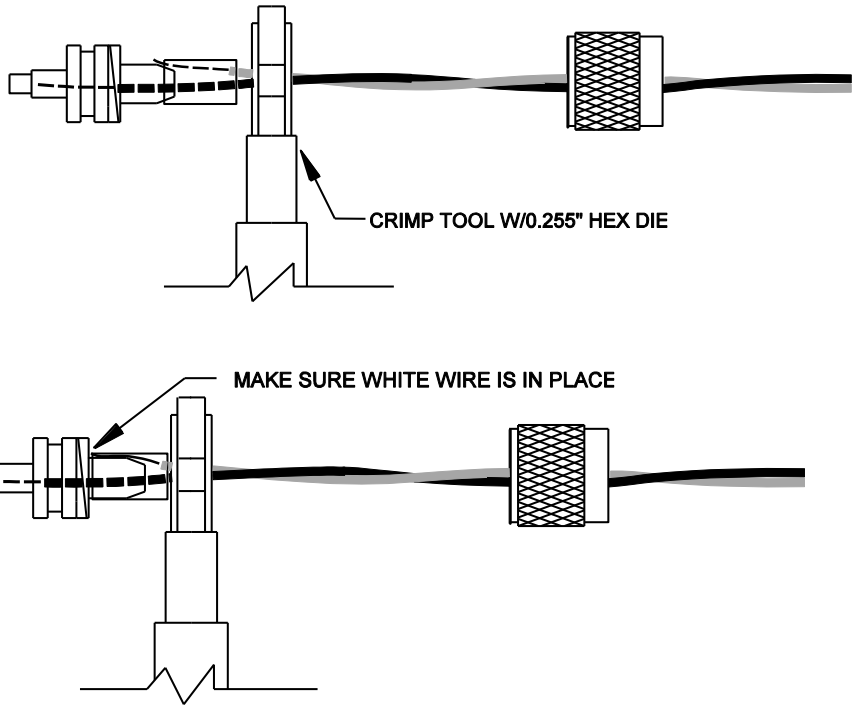

Step F Use the 0.255” hex die and crimp the outer ferrule.

Step G Bend a short length of #18 AWG [0.75 mm^2] solid copper wire to a ¼” [6mm] long right angle and insert it into the center contact next to the ATP conductor. Insert it as far as the bend.

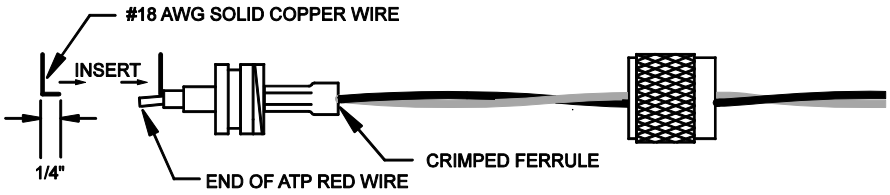

Straighten the copper wire so it does not interfere with the crimp tool closing. Crimp the center contact using the crimp tool 0.100” die. Trim excess wire as shown. Slide the coupling ring to the plug body and thread it onto the body. If there are any gaps between the red and white wires, twist the connector slightly to remove them.

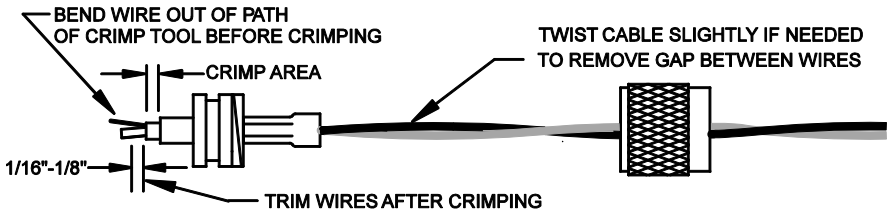

8.3 Shrink Tubing

All cable connectors installed in inaccessible locations or locations subject to frequent leaks or corrosive environments must be encapsulated with shrink tubing. This applies to sensor cables and jumper cables. Connectors used for calibration points should not be sealed until the system has been brought online unless they may be exposed to water before start-up.

8.3.1 Cable Type TFH

1. **The TFH cable connector assemblies must be encapsulated in watertight shrink tubing.** Test connectors according to the "Cable and Connector Testing Procedures" before heating the shrink tubing. **Connectors used for calibration points must be kept dry until the system has been commissioned. After commissioning, the shrink tubing should be installed. If water is allowed to enter the end of the cable and get under the jacket, the cable must be replaced**.
2. Install the shrink tubing in accordance with the following steps:

Step A Slide the overbraid and cable jacket back from the reducing adapter, to expose ½" [12 mm] of braid wire. Smooth the excess cable jacket away from the connector, so there is at least 5" [125 mm] of smooth surface adjacent to the connector. If the sensor cable is being connected to a jumper cable, skip steps A and B for jumper cable.

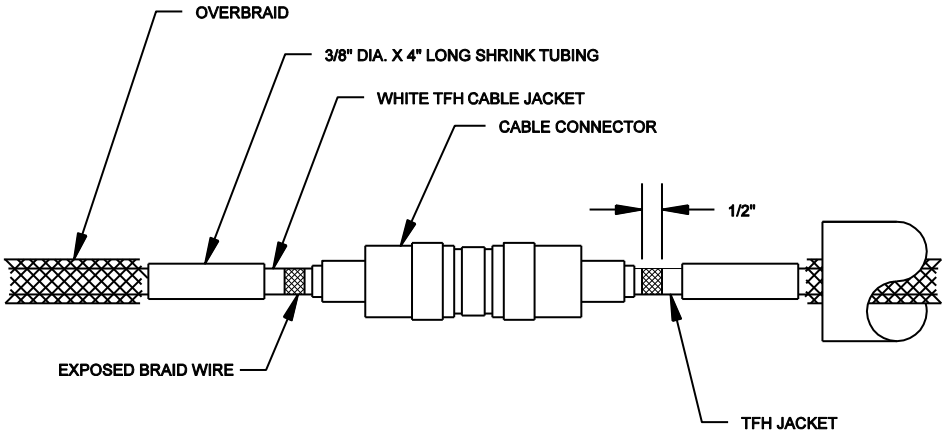

Step B Place a 1/4" [6 mm] bead of non-corrosive RTV sealant around the cable on the exposed braid wire.

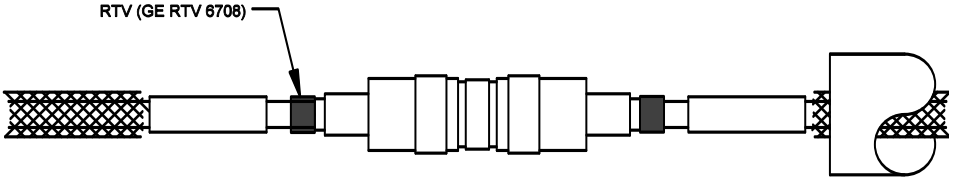

Step C Slide the 4" [100 mm] long shrink tubing to the reducing adapter, if the CASTD connector is used. Make sure there are no wrinkles in the cable jacket. Make sure the shrink tubing does not overlap the reducing adapter. Slide the shrink tubing over the outer crimp ferrule to the back of the connector body if the CAGOLD crimp style connector is used. Heat the shrink tubing with a heat gun until it has fully shrunk and adhesive oozes out the end. Do not disturb the assembly until the shrink tubing has cooled (approximately 5-10 minutes).

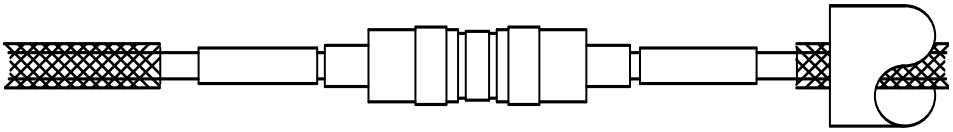

Step D After both cable ends have been sealed with the 4" [100 mm] shrink tubing, recheck that the connectors are tightened securely. Test the connector according to the "Cable and Connector Testing Procedures". Then slide and center the 8" [200 mm] shrink tubing over the connector and heat it until it is fully shrunk and adhesive oozes out the ends.

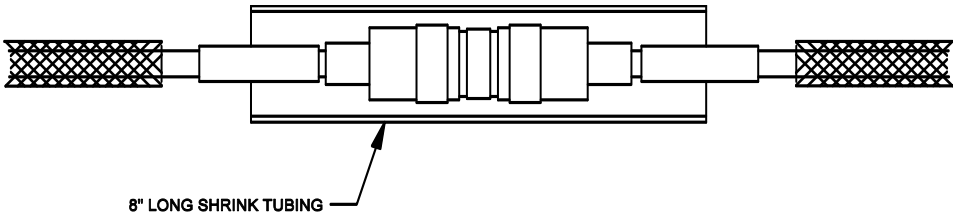

Step E Slide the overbraid to the connector and tape in place with electrical tape.

8.3.2 Cable Types AGW-Gold, AGT-Gold and TFH-Gold

Step A Install connectors and test them following the "Cable and Connector Testing Procedures" in this manual.

Step B Slide a 6" [150 mm] piece of shrink tubing on the cable and tighten the connector assembly securely.

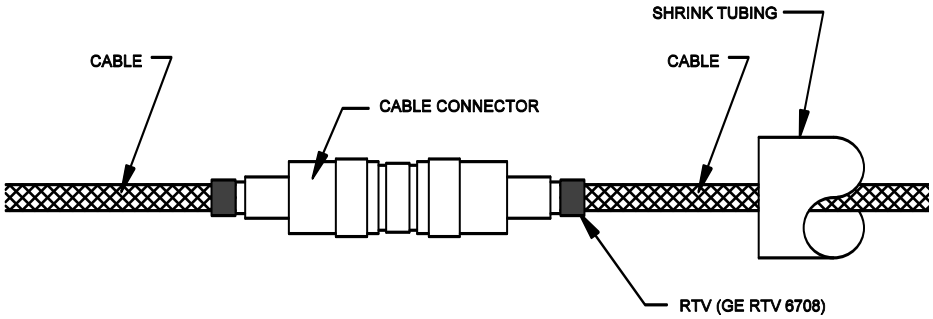

Apply a minimum ¼" [6 mm] bead of **noncorrosive type RTV** completely around the cable next to the end of each of the connectors.

Step C Center the shrink tubing over the connector. Carefully heat the tubing, slightly, over the center of the connector. **Caution: If the shrink tubing is overheated in the center area, it may tear as it tries to shrink to the size of the cable. Next heat the remainder of the tubing. Do not heat the tubing any longer than required to shrink the tubing around the cable.**

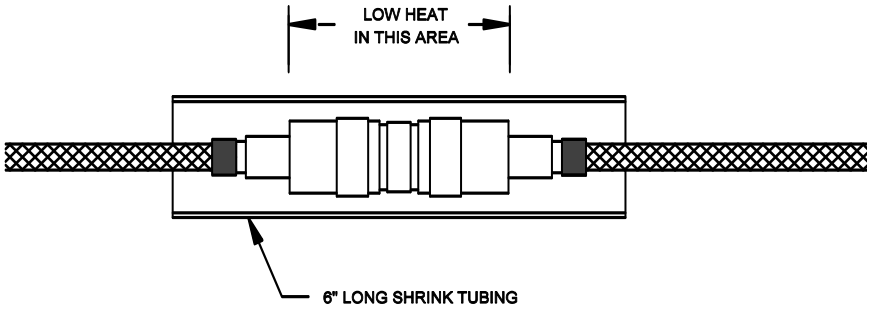

8.3.3 Cable Types JMP-U/-UD, JPP and JMP

Step A Install connectors and test them following the "Cable and Connector Testing Procedures" in this manual.

Step B Slide a 6" [150 mm] piece of shrink tubing on the cable and tighten the connector assembly securely.

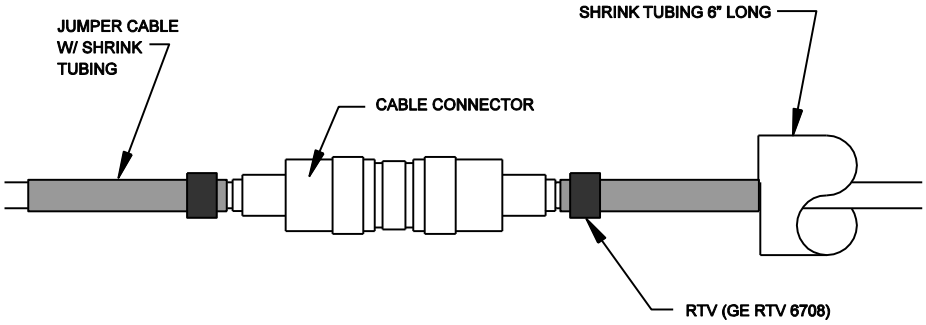

Apply a minimum ¼" [6 mm] bead of **noncorrosive type RTV** completely around the cable on the installed shrink tubing next to the end of each of the connectors.

Step C Center the 6" long shrink tubing over the connector. Carefully heat the tubing, slightly, over the center of the connector. **Caution: If the shrink tubing is overheated in the center area, it may tear as it tries to shrink to the size of the cable. Next heat the remainder of the tubing. Do not heat the tubing any longer than required to shrink the tubing around the cable.**

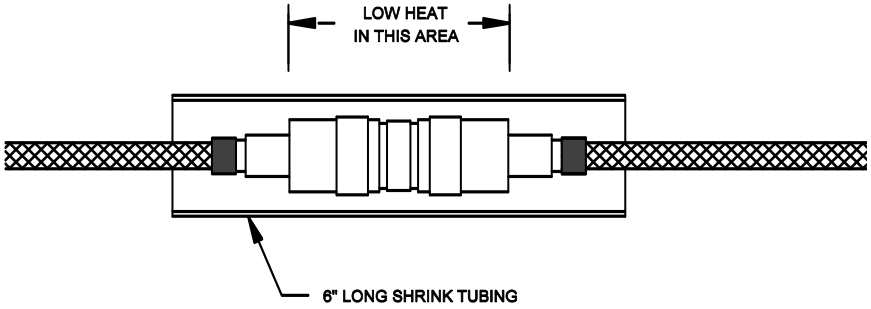

8.4 Cable and Connector Testing Procedures

8.4.1 General

The following tests should be performed on each length of cable after both connectors are installed. Figure 8-1 illustrates the tests. Any overbraid or outer jacket is not shown.

8.4.2 Continuity Test

The continuity test checks for broken cable, open connectors, and poor connections.

1. Connect a short jumper wire with alligator clips between the UHF connector's center contact and the body of the connector at one end of the cable, as shown in figure 8-1. **Note: Do not clip onto the threaded coupling ring because the ring is not tightly secured, resulting in intermittent readings**.
2. Connect the ohmmeter's test leads to the connector's center contact and connector body on the other end of the cable.
3. The ohmmeter reading should be less than 10 ohms/1000' [10 ohms/300 m] of cable. If it is not, check the jumper wire, test lead connections, and repeat the test. If the problem persists, contact the PermAlert Field Service Department for assistance.

8.4.3 Alternative System Test

1. Connect the entire cable string to the PAL-AT panel.
2. Make sure the panel is turned off. Set the impedance jumper for the cable under test – position C (w/o ZBA) or D (w/ZBA). If applicable, make sure the replaceable fuse in the ZBP is good.
3. Measure the resistance at the far end of the cable string. Connect one test lead to the center contact of the last connector and the other lead to the connector body. The resistance should be less than 60 ohms + 10 ohms/1000' [75 ohms/300 m] of cable string.
4. If intermittent connections are suspected, gently flex the connectors while the meter is monitored.

8.4.4 Insulation Test

The insulation test checks for a short between the center conductor and outer braid.

1. Remove the jumper wire used in the continuity test, as shown in figure 8-1 and connect one ohmmeter test lead to the connector's center contact and the other lead to the connector body.
2. A good cable will give a full-scale reading (at least 10 megohms). Test readings below full scale indicate damaged cable or an improperly installed connector. If you cannot resolve the problem, contact PermAlert's Field Service Department for assistance.

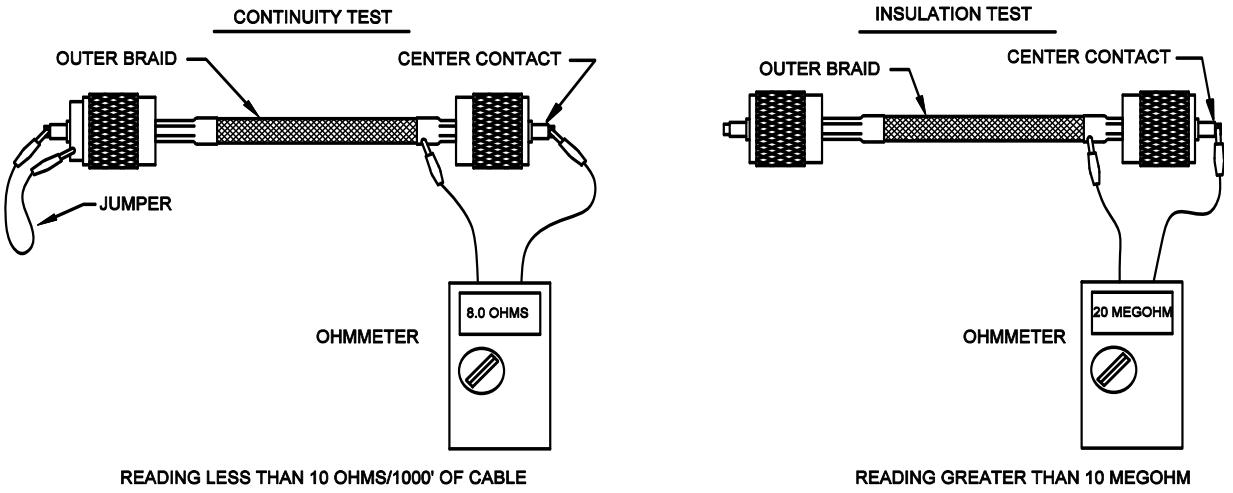

Figure 8-1
Cable Test Procedures

8.5 Cable Connections to Panels

8.5.1 General

The ends of the jumper cables connected to the PAL-AT panel or Zener Barrier Panel need to be terminated with wire ferrules. The ferrules provide a positive connection and prevent stray strands of the wires from shorting to adjacent terminals.

8.5.2 Ferrule Installation in PAL-AT Panel

Step A Remove 1.25” [32 mm] of cable jacket

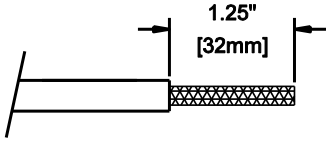

Step B Separate the braid wire into two equal groups. It is easier to unbraid the wire if it is done in ¼” long increments. It is helpful when working with JMP-U cable to keep tools and fingers damp

when touching the sticky, water-blocking material. Twist each group into a small wire. Remove 1.0" [25 mm] of insulation from the center wire.

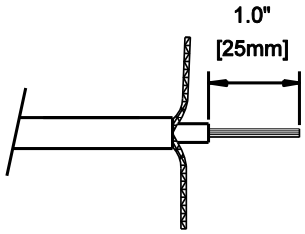

Step C JMP-U/-UD Cable

Slide a 14 AWG [2.5 mm²] uninsulated ferrule onto the center wire until it is tight against the center insulation. Crimp the ferrule using a 2.5 mm² die. Then crimp it again with a 1.5 mm die. Slide a 16 AWG [1.5 mm²] insulated ferrule over each group of braid wire twisted strands. Spread the ferrules apart to fit into the connector as shown. Align the ferrule ends as shown while minimizing slack in the braid wire. Crimp the ferrules using a 1.0 mm crimp die.

JMP (from ZBA) or JPP Cable

Slide an 18 AWG (1.0mm²) insulated ferrule onto the center wire until the ferrule insulation is completely over the wire insulation. Crimp the ferrule using a 0.50 mm crimp die. Slide an 18 AWG (1.0mm²) insulated ferrule over each group of braid wire twisted strands. Spread the ferrules apart to fit into the connector as shown. Align the ferrule ends as shown while minimizing slack in the braid wire. Crimp the ferrules using a 0.50 mm crimp die.

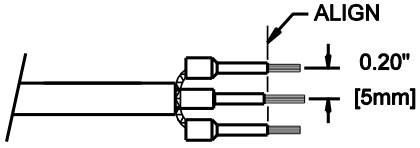

Step D Trim excess wire from the end of the ferrules.

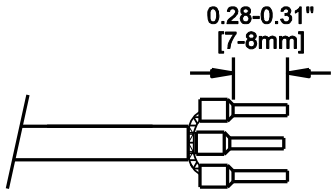

Step E The cable ferrules should be inserted into the cable plug and tightened as shown. **Before connecting the cable, route the excess cable in the enclosure so there will not be excessive strain or twisting at the terminals**. Insert the plug into the appropriate receptacle as shown. The center conductor ferrule should be in the center terminal of the plug and the two braid ferrules in the outer terminals. When removing the cable, grip the plug and pull it straight out of the receptacle. **Note the plug and receptacle are polarized so they can only be connected one way**.

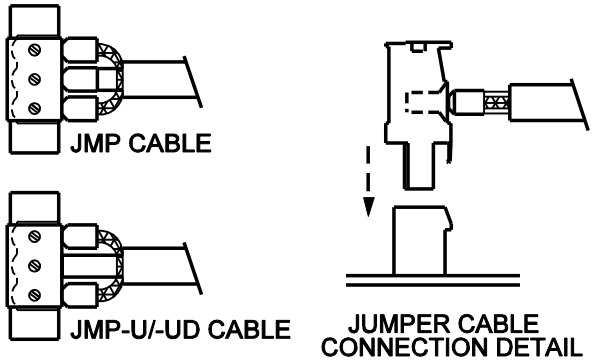

8.5.3 Ferrule Installation in Zener Barrier Panel

Step A Remove 1.5” [38 mm] of cable jacket.

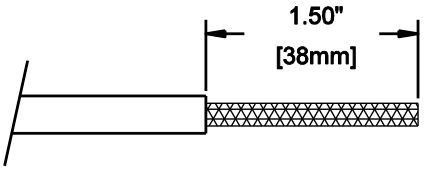

Step B Separate the braid wire into two equal groups. Twist each group into a small wire. Remove 1.25” [32 mm] of insulation from the center wire.

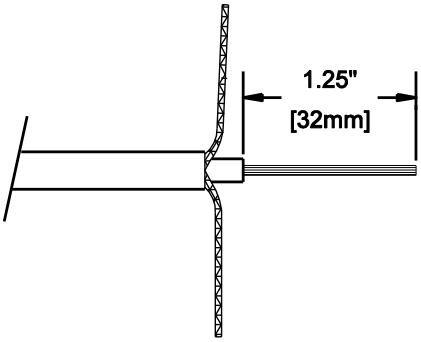

Step C JMP-U/-UD Cable

Slide a 14 AWG [2.5 mm²] uninsulated ferrule onto the center wire until it is tight against the center insulation. Crimp the ferrule using a 2.5 mm² die. Then crimp it again with a 1.5 mm die. Slide a 16 AWG [1.5 mm²] insulated ferrule over each group of braid wire twisted strands. Align the ferrule ends as shown while minimizing slack in the braid wire. Crimp the ferrules using a 1.0 mm crimp die.

JPP Cable

Slide an 18 AWG (1.0mm²) insulated ferrule onto the center wire until the ferrule insulation is completely over the wire insulation. Crimp the ferrule using a 0.50 mm crimp die. Slide an 18 AWG (1.0mm²) insulated ferrule over each group of braid wire twisted strands. Align the ferrule ends as shown while minimizing slack in the braid wire. Crimp the ferrules using a 0.50 mm crimp die.

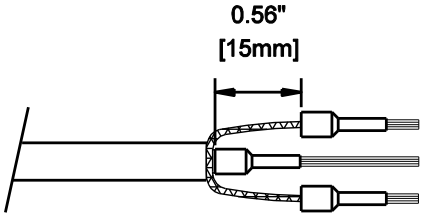

Step D Trim excess wire from the end of the ferrules.

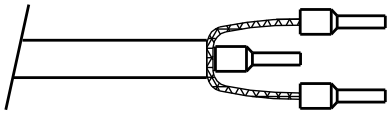

Step E **Before connecting the cable, route the excess cable in the enclosure so there will not be excessive strain or twisting at the terminals**. Insert the center wire into the fuse holder terminal and tighten the screw. Then insert one of the braid ferrules in the adjacent braid terminal and fasten it. Repeat with the remaining braid ferrule. If the ferrules were installed properly, there should be very little slack braid wire.

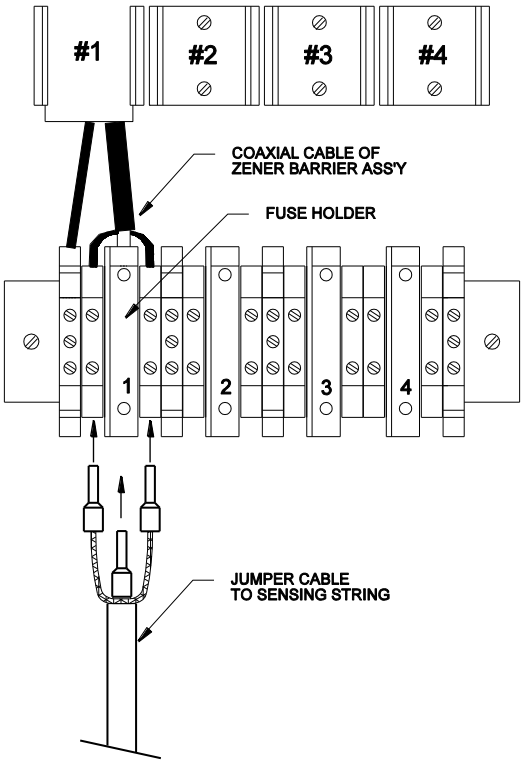

8.5.4 ATP Cable Connection at PAL-AT

The ATP cable uses two of the three cable plug terminals as shown below. Strip 3/8" [10mm] of insulation from the end of the red and white wires. Insert the red wire into the center terminal and the white wire into either of the side terminals of the cable plug and tighten as shown. **Before connecting the plug, route the excess cable in the enclosure so there will not be excessive strain or twisting at the terminals**. Insert the plug into the appropriate receptacle as shown. When removing the cable, grip the plug and pull it straight out of the receptacle. **Note the plug and receptacle are polarized so they can only be connected one way.**

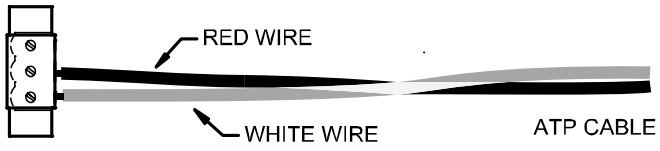

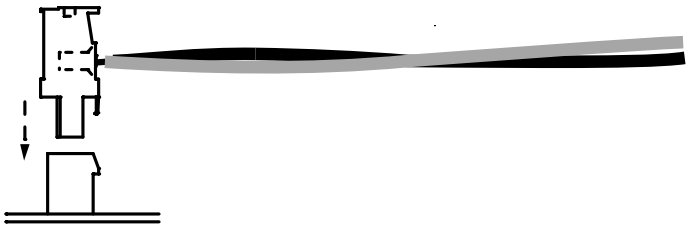

ATP CABLE
CONNECTION DETAIL

9 Probes

9.1 UL Requirements

All PermAlert probes are approved for installation in ordinary, or unclassified, locations. All PermAlert probes, **except the PWS water probe**, are also approved for installation in hazardous locations (see figures 3-2 and 3-3) when the sensing string is connected to a Zener Barrier Panel and Zener Barrier Assembly.

9.2 Probe Integrator Selection

All probe integrators have a red or blue band(s) of shrink tubing on the probe lead cable. A probe integrator with a red band(s) is used with PHLR, PSTV, PFS and PTHL probe or a normally closed switch. A probe integrator with a blue band(s) is used with the PWS probe or a normally open switch.

The number of bands on the probe integrator indicates where it can be used in the sensing string. One band (-S model) indicates the probe integrator must be connected to the system in the first 5,000' [1500 m] of sensing string. Two bands (-L model) indicate the probe integrator must be connected to the sensing string beyond 5,000' [1500 m] (Contact factory for specific requirements).

9.3 Probe Installation

1. All PAL-AT probes are furnished with a probe integrator and 60' [18 m] of JMP-U jumper cable in a NEMA 4X [IP66] junction box. The probe integrator allows the attachment of probes to the PAL-AT monitoring system. The standard 10" x 8" x 4" [250 mm x 200 mm x 100 mm] junction box can house one integrator. A 12" x 10" x 4" [300 mm x 250 mm x 100 mm] junction box is recommended if 2 probe integrators are located in one box.
2. The maximum temperature for a probe integrator is 180°F [80°C] in ordinary locations. **If a probe integrator is connected to a ZBA in a hazardous location, the maximum temperature is 140°F [60°C**].
3. The standard polyester probe junction box is rated for 150°F [65°C]. An optional high- temperature fiberglass box is also available. Make sure the enclosure is appropriate for the ambient temperature.
4. Some probe components (epoxy, shrink tubing, etc.) are resistant to many hydrocarbons and chemicals. However, the probes should be cleaned promptly after a leak event. **If left exposed to hydrocarbon liquids or chemicals for extended periods, the probes may require replacement.**
5. Mount the probe integrator junction box at a location close to the point being monitored. PermAlert supplies probes with 20' [6 m] of twin lead cable. Uncoil the twin lead cable. **Do not splice on additional wire to lengthen the leads.** If the probe integrator is located in a manhole or pit, which may collect and hold water, mount the junction box as high as possible.
6. Figures 9-1 and 9-2 show the recommended installation procedures. Figures 9-3 thru 9-7 show typical probe installations. Install the probe and use electrical conduit and/or watertight cord grips, as necessary, to prevent water entry where the probe twin lead penetrates the monitored area. If the probe lead length is longer than 5' [1.5 m] and the probe is installed in the first 800' [245 m] of a system, plastic conduit should be used instead of metal conduit. The cord grip (part # 8057950) with the oval opening in the bushing is used with the twin lead cable. The cord grip (part # 8057954) with the round hole is for the jumper cable.
7. Once a probe is installed, the twin lead should be routed to the junction box containing the probe integrator. **Trim the excess length of the probe twin lead before splicing it to the probe integrator.** Splice the leads to the integrator by using the crimp connectors supplied with the probe. Heat the splice with a heat gun to seal the adhesive-lined shrink tubing on the connector.
8. Use all 60' [18 m] of jumper cable furnished with the probe integrator. **If the jumper cable leads are too long, do not shorten,** but loosen the watertight cord grips and coil the excess jumper cable within the probe junction box. One jumper cable length is shorter than the other is. Connect the shorter end (10') [2.5 m] to the cable segment closest to the PAL-T panel. The longer end of jumper cable (50') [15 m] should be routed to the connection point for the continuation of the sensing string.
9. Additional jumper cable may be required to be added to the end of a probe installed beyond 3000' [900 m] on the cable string (see table 9-1).

10. If the probe is the end of the sensing string, refer to table 4-1 (section 4) for the required length of jumper cable needed to be added to the end of the probe.
11. Additional jumper cable may be connected on either side of the probe integrator to facilitate connection of remote sensing string components.
12. Refer to the "Cable Connector Installation" section of this manual and install a connector on each length of jumper cable. Test all connectors using the "Cable and Connector Testing Procedures".
13. Cable connections to jumper cable from the probe integrators will become calibration points and must be accessible during system start-up.
14. The maximum number of probes per cable string is 10. A maximum of three probes installed past 5000' [1500 m] is allowed (Contact factory).

Table 9-1
Additional Jumper Cable after Probe

Probe Location on Sensing String ft / [m]	Additional JMP-U/-UD At End of Probe ft / [m]			Additional JPP At End of Probe ft / [m]		
	Twin Lead Length			Twin Lead Length		
	20 / [6]	15 / [4.5]	10 / [3]	20 / [6)	15 / [4.5]	10 / [3]
0-3000 / [0-900]	0 / [0]	0 / [0]	0 / [0]	0 / [0]	0 / [0]	0 / [0]
3001-4000 / [900-1200]	20 / [6]	0 / [0]	0 / [0]	25 / [8]	0 / [0]	0 / [0]
4001-5000 / [1200-1500]	60 / [18]	25 / [8]	20 / [6]	80 / [25]	35 / [11]	25 / [8]
Over 5000 / [over 1500]	Contact Factory					

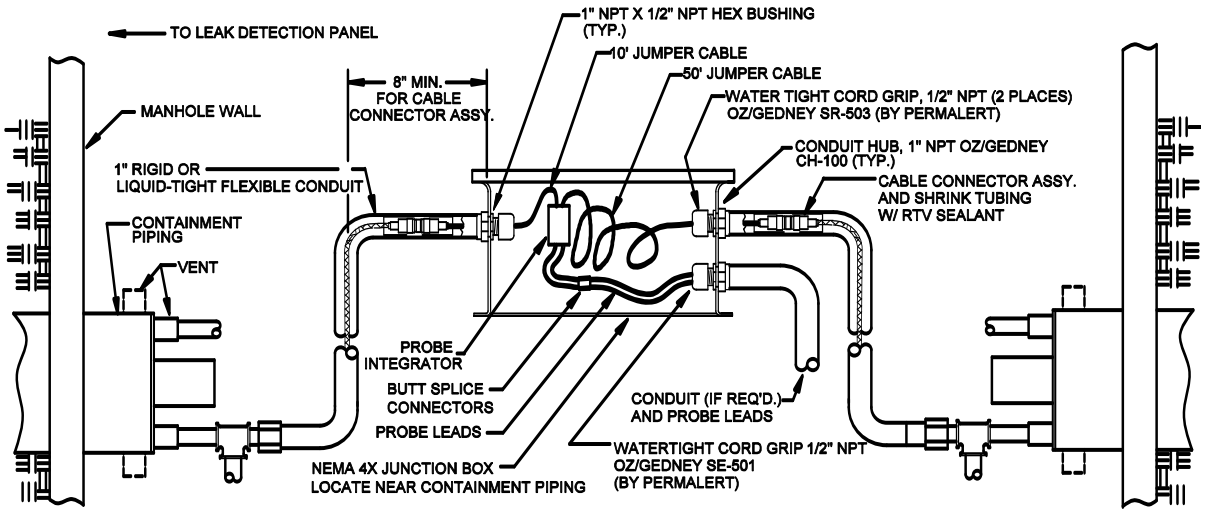

NOTES:

1. WATERTIGHT CORD GRIPS, CONDUIT HUBS AND CONDUIT ARE RECOMMENDED
2. THE 10' AND 50' JUMPER CABLE CONNECTED TO THE PROBE INTEGRATOR MUST NOT BE SHORTENED. COIL EXCESS WITHIN NEMA 4X JUNCTION BOX.
3. 50' LENGTH OF JUMPER CABLE ATTACHED TO THE PROBE INTEGRATOR MUST BE DOWNSTREAM OF THE PROBE INTEGRATOR AWAY FROM THE PAL-AT PANEL
4. CONDUIT SHOULD BE USED TO PROTECT THE PROBE LEADS IN APPLICATIONS WHERE DAMAGE MAY OCCURE
5. MARK UNPROTECTED PROBE LEADS WITH CABLE TAG, PART NUMBER 8057661.
6. ALLOW SLACK ON SENSOR CABLES TO INSTALL CONNECTORS.

Figure 9-1
Typical Probe Connection in Monitored Areas

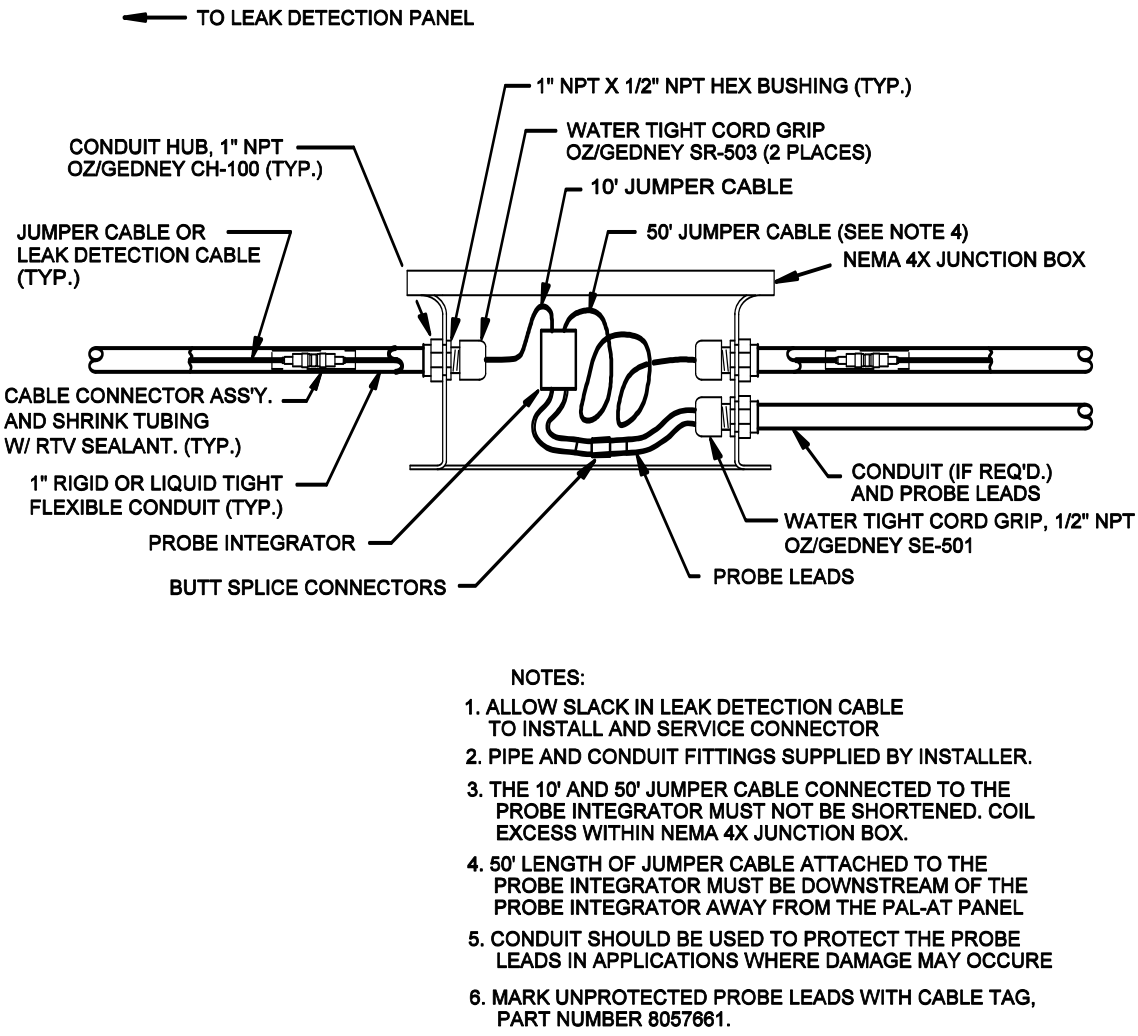

NOTES:

1. ALLOW SLACK IN LEAK DETECTION CABLE TO INSTALL AND SERVICE CONNECTOR
2. PIPE AND CONDUIT FITTINGS SUPPLIED BY INSTALLER.
3. THE 10' AND 50' JUMPER CABLE CONNECTED TO THE PROBE INTEGRATOR MUST NOT BE SHORTENED. COIL EXCESS WITHIN NEMA 4X JUNCTION BOX.
4. 50' LENGTH OF JUMPER CABLE ATTACHED TO THE PROBE INTEGRATOR MUST BE DOWNSTREAM OF THE PROBE INTEGRATOR AWAY FROM THE PAL-AT PANEL
5. CONDUIT SHOULD BE USED TO PROTECT THE PROBE LEADS IN APPLICATIONS WHERE DAMAGE MAY OCCURE
6. MARK UNPROTECTED PROBE LEADS WITH CABLE TAG, PART NUMBER 8057661.

Figure 9-2
Typical Conduit Connection Detail

9.4 PHLR Hydrocarbon Probe

The PHLR series is a reusable hydrocarbon probe that detects hydrocarbon liquids in sumps, interstitial spaces of pipes and any other areas where hydrocarbon liquids can accumulate to a depth of ¼" [6 mm]. The probe is designed to detect fuels (gasoline, diesel fuel, jet fuel, crude oil, etc.) and many hydrocarbon solvents. The probe is reusable by cleaning or replacing the sensor elements. There are two models of the PHLR probe available:

- The standard PHLR is designed for non-pressurized locations such as sumps, manholes, and non-pressurized containments. The PHLR can be installed in any orientation – vertical or horizontal.
- The PHLR-P is designed for pressurized containment applications. This model is ideal for typical sealed, containment piping systems that are maintained under pressure with a nitrogen or air blanket. The PHLR-P should be installed in a vertical orientation. **The PHLR-P has vent holes that must not be submerged in a liquid before the containment is pressurized** (see figure 9-4).

An extension to the probe housing can easily be added with standard ¾" Schedule 40 PVC pipe to accommodate installation requirements.

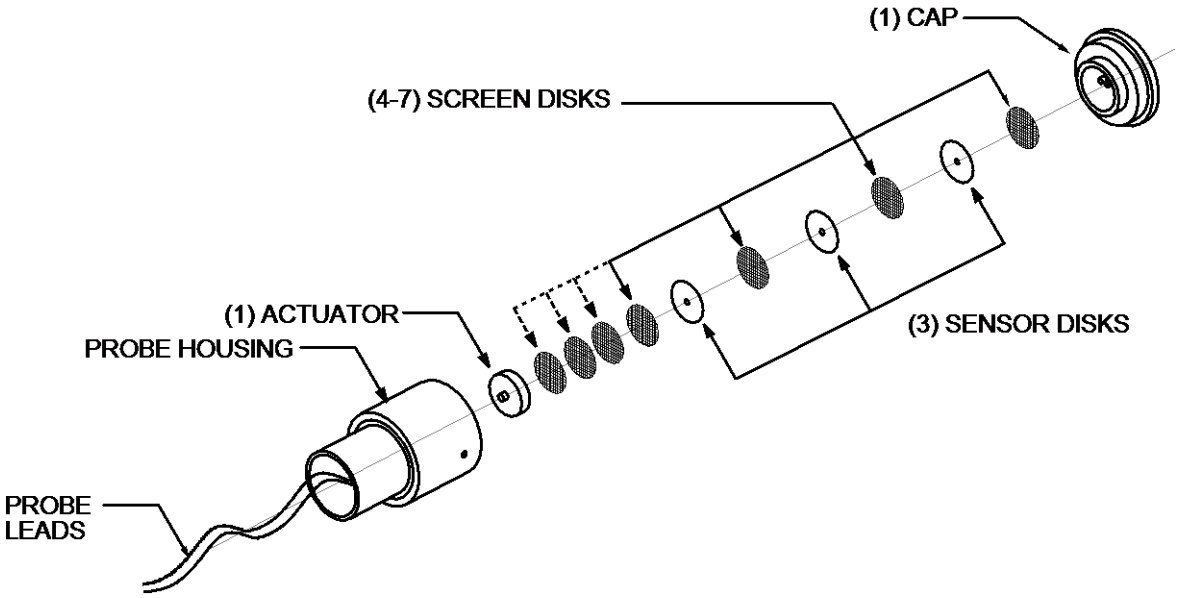

Figure 9-3
PHLR Sensor Package

9.4.1 Cleaning Sensor Elements Procedure

The replacement sensor package consists of 10 disks: seven screen disks and three sensor disks as shown in figure 9-3. The replacement package includes all removable parts: probe cap, sensor elements, and actuator. Replacement sensor elements can also be purchased separately.

The following procedure is a general guideline to follow to clean the probe and sensor elements after exposure to hydrocarbon liquids.

Caution: It is the user's responsibility to determine safety precautions and the suitability of exposing personnel to the hydrocarbon liquid on the probes and various cleaning solvents suggested.

The sensor disks swell after exposure to fuels and solvents. The swelling forces the actuator to move and operate a low-force sealed switch. Volatile hydrocarbon liquids, such as gasoline, will eventually evaporate resulting in the sensor disks returning to their original size. This allows the switch to return to the normal position. A faster resetting process is to disassemble the probe to speed the evaporation of the liquid. Other liquids, such as diesel fuel and jet fuel that do not evaporate, must be flushed with a solvent to remove the contamination. Disassemble and clean the probe as follows:

1. Remove excess hydrocarbon contamination from the exterior of the probe.
2. Hold the switch in a vertical position with the cap downward and unscrew the cap. Do this over a table so the small parts are not lost if they are dropped. **Be very careful not to lose the sensor disks.** They are very similar to contact lenses in size and texture.
3. Place the actuator, screens, cap, and sensor disks into a small container of solvent. Coleman Camp Fuel, which is naphtha, works well and evaporates very quickly. Other solvents that evaporate quickly and completely are also suitable.
4. Soak the components for a minute or two and then remove them.
5. Let the solvent evaporate until the disks return to the original diameter and fit into the cap easily. If the sensor disks do not slip easily into the circular holder in the cap, repeat the cleaning process. The disks should be about 0.5" [12 mm] diameter when dry.

6. Reassemble the switch. Carefully alternate the screens and three sensor disks in the cap as shown in figure 9-3. If there are more than 4 screens, place the extra screens on top. Place the actuator on top of the top screen. The actuator has a small point in the center of one side that must face the probe housing as shown. Hold the probe housing vertically and screw the cap finger-tight into the bottom of the housing.
7. If response time is over 5 minutes for diesel fuel at room temperature, insert the optional fifth screen next to the actuator. Make sure the extra screen does not activate the probe when it is tightened. If so, remove the extra screen. The extra screen accommodates manufacturing tolerances and reduces the amount of swelling of the sensor disks required before the probe activates.

9.4.2 Testing the Probe

The assembled probe can be easily tested with an ohmmeter and a small paperclip.

1. Connect the ohmmeter leads to the probe leads.
2. The reading should be very low, typically under two ohms.
3. Insert the paper clip into one of the five holes in the center of the cap and press gently (1-2 oz of force [25 g to 50 g]) into the switch.
4. The ohmmeter should read an open circuit or 0.L.
5. Remove the paper clip and the meter should return to the original low reading.
6. Disconnect the ohmmeter.

9.4.3 Troubleshooting

If the test results are not as expected, the following checks should help determine the problem.

- If the original reading is greater than 2 ohms or open, or 0.L, then
    - Check the sensor disks and screens are installed correctly. They must be flat, not folded over.
    - Verify the diameter has returned to the original size. Clean again if needed.
    - Recalibrate the probe as described below.
- If the ohmmeter reading is not an open circuit, 0.L, when the paperclip is inserted, then
    - Check the meter leads or probe wires are not shorted together.
    - Disassemble the probe and make sure the actuator point is oriented properly to press into the center of the switch in the probe housing.
    - Recalibrate the probe as described below.

9.4.4 Calibrating the Probe

If the sensor elements are replaced, it is necessary to use the correct number of screen elements for optimum sensitivity (see figure 9-3). The number of screens required varies due to manufacturing tolerances of the probe. A multimeter is required.

1. Set the multimeter to the ohms function, auto-ranging scale, and connect to the probe leads.
2. Assemble the probe with seven screens and three elements as shown. Tighten the cap finger tight.
3. If the meter reading is less than 2 ohms, the probe fails the calibration. Make sure there are no extra screen or sensor disks installed.
4. If the reading is 0.L, remove a screen (shown by the dashed arrows in figure 9-3). If the reading is less than 2 ohms, the calibration is complete.
5. If more than four screens are installed repeat step 4.
6. If the reading is 0.L with four screens, the probe fails the calibration. Make sure there are three sensor disks and at least four screen disks installed.

If the reading in step 4 is not less than 2 ohms, hold the probe in a vertical orientation and gently tap the housing. The switch resistance should be less than 2 ohms in the normal dry state.

9 Probes

9.5 Typical Installations

Contained Pipe

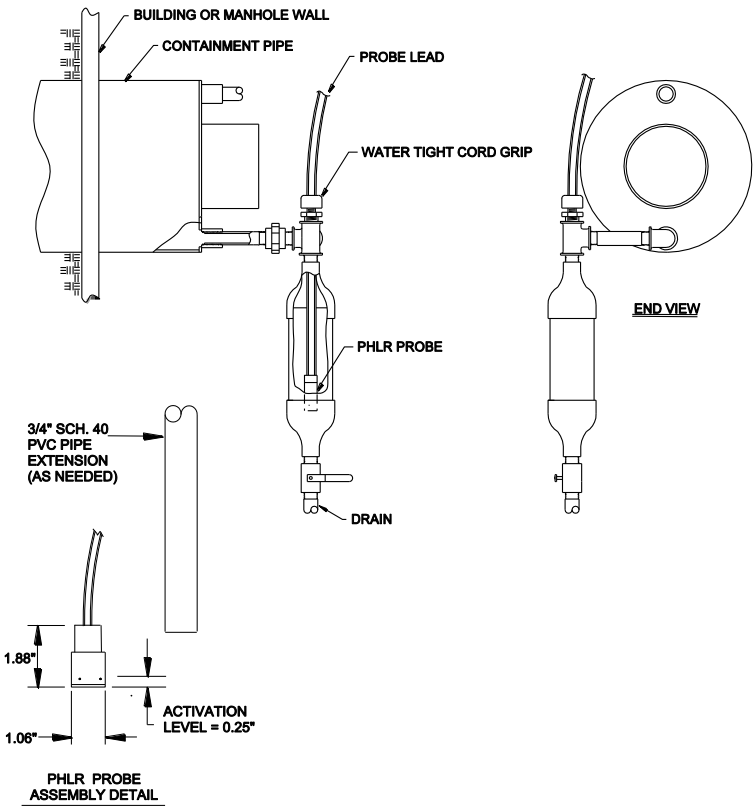

Pressurized Contained Pipe

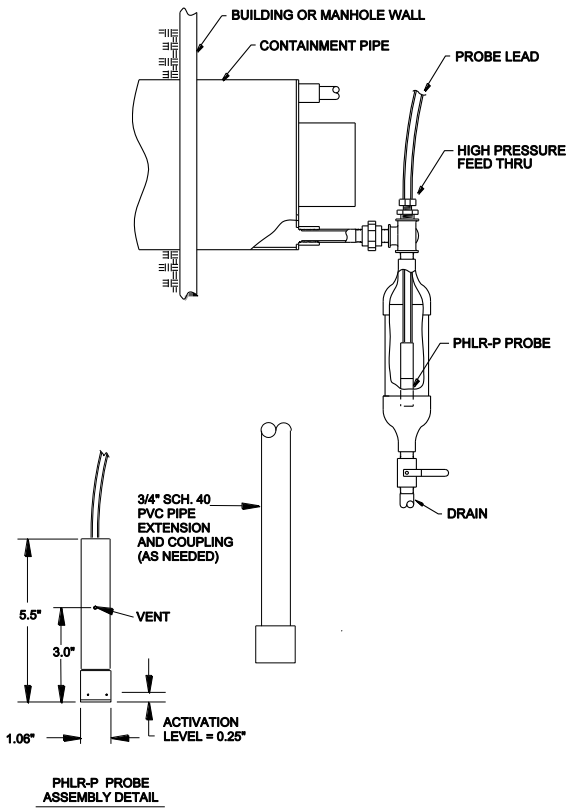

Double-Wall Tanks

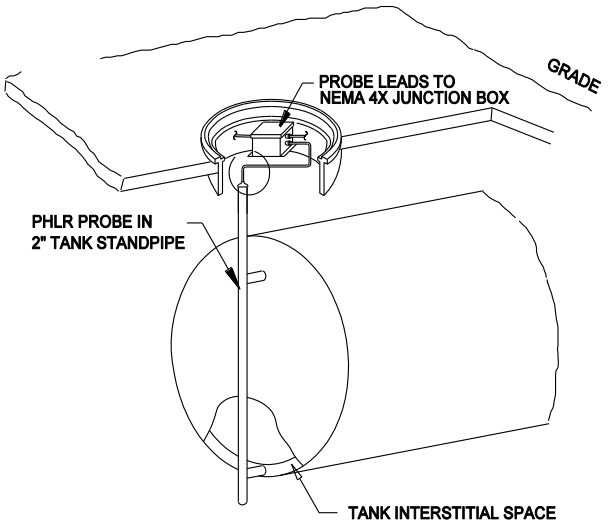

Contained Area

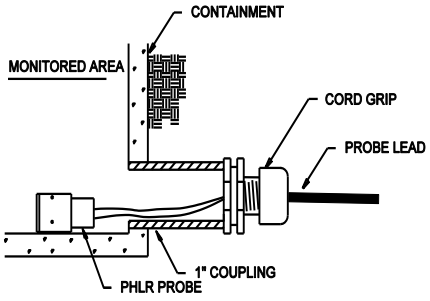

Figure 9-4
Typical PHLR and PHLR-P Probe Installations

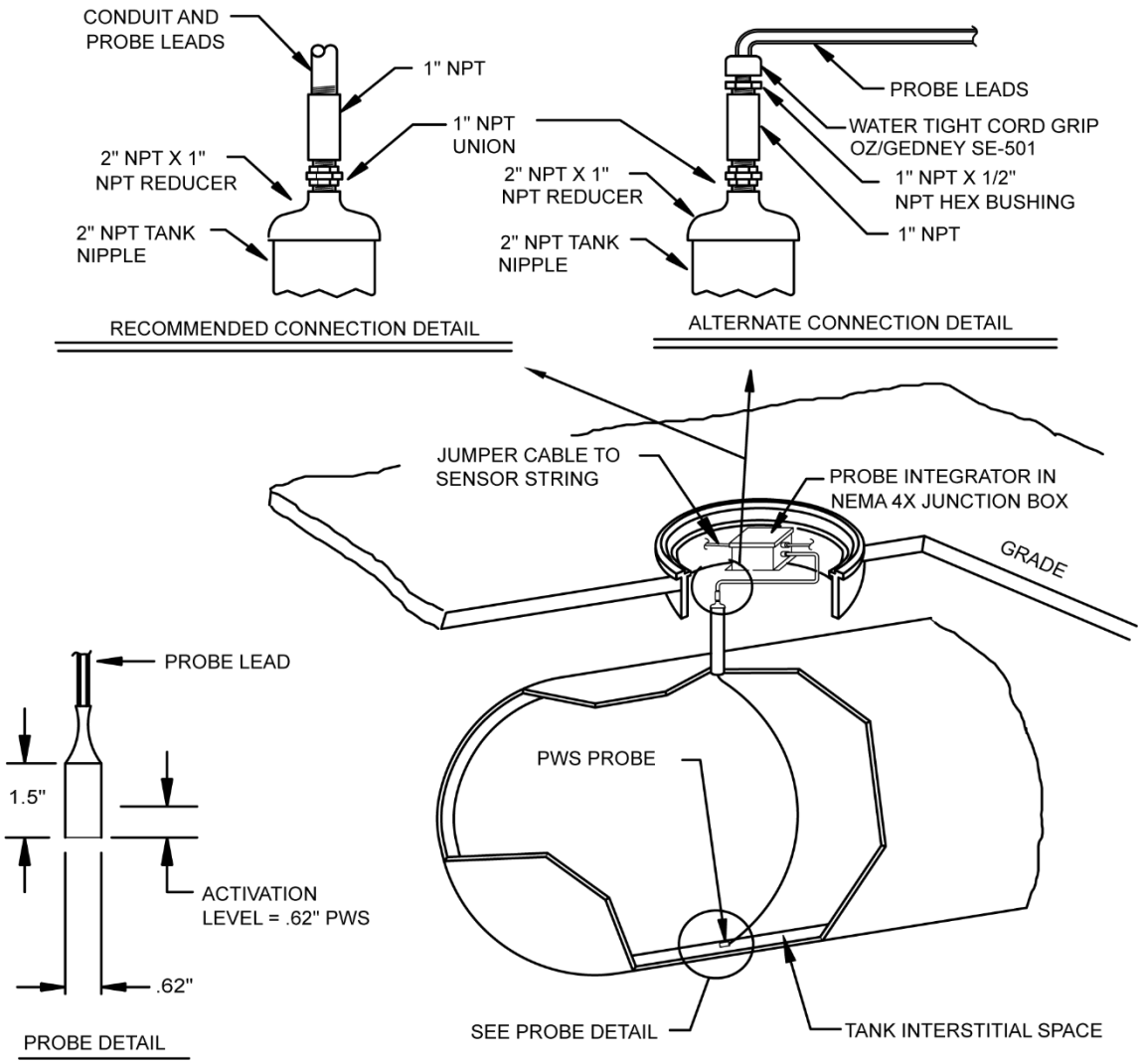

NOTES:

1. LENGTH OF PROBE LEAD IS 20 FEET MAX.

Figure 9-5
Typical PWS Probe Installation

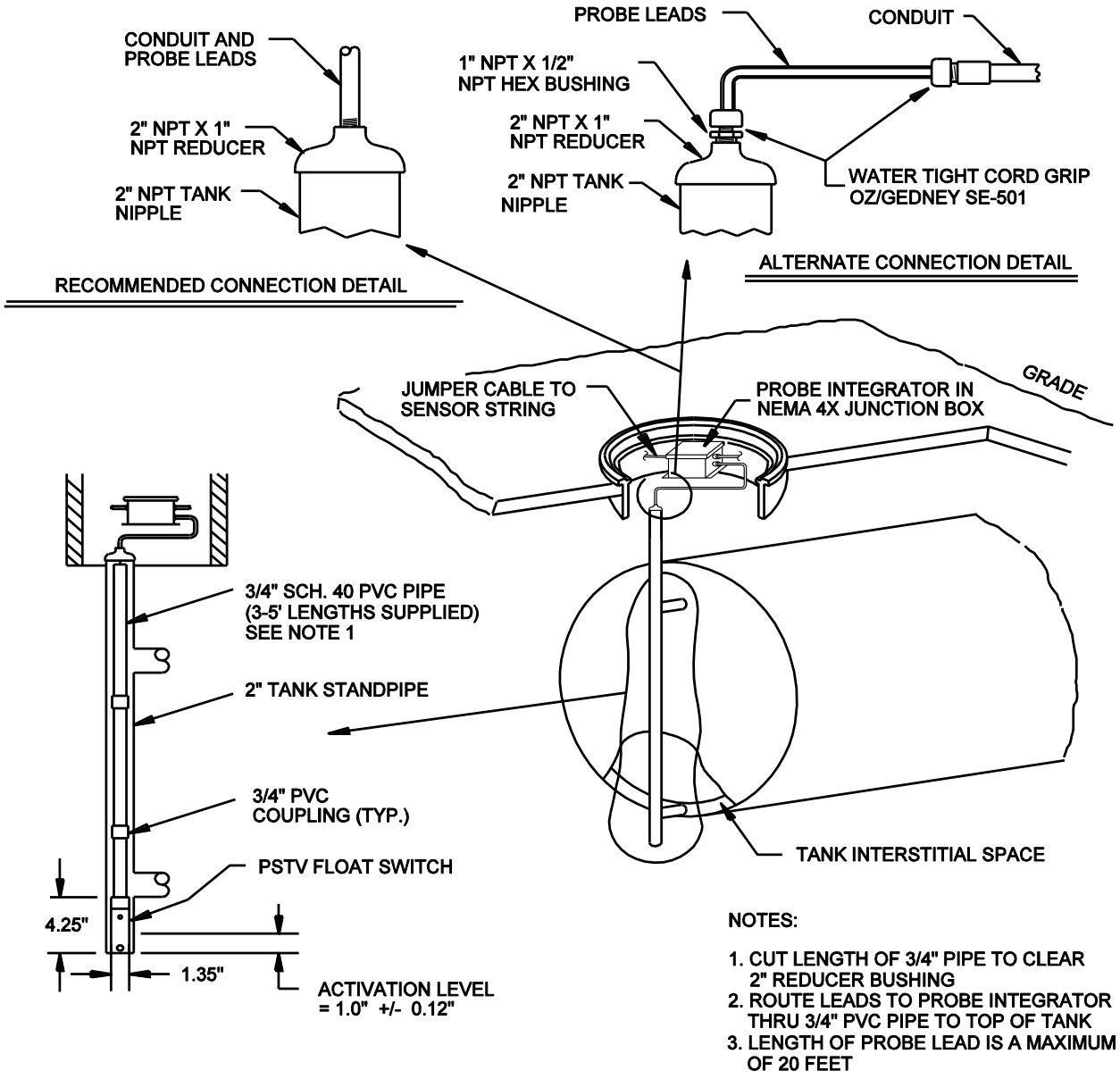

Figure 9-6
Typical PSTV Tank Float Switch Installation

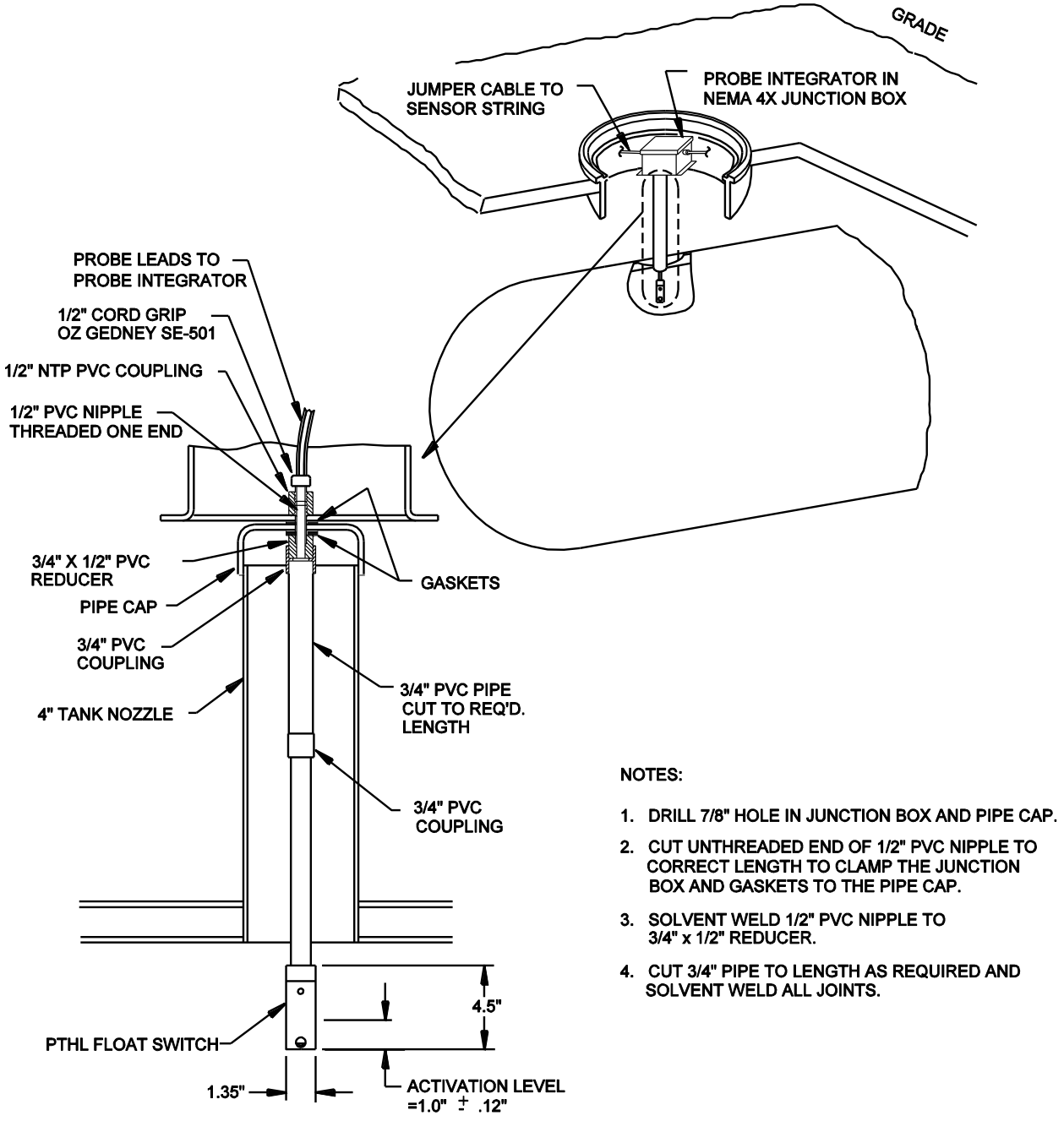

Figure 9-7
Typical PTHL Installation

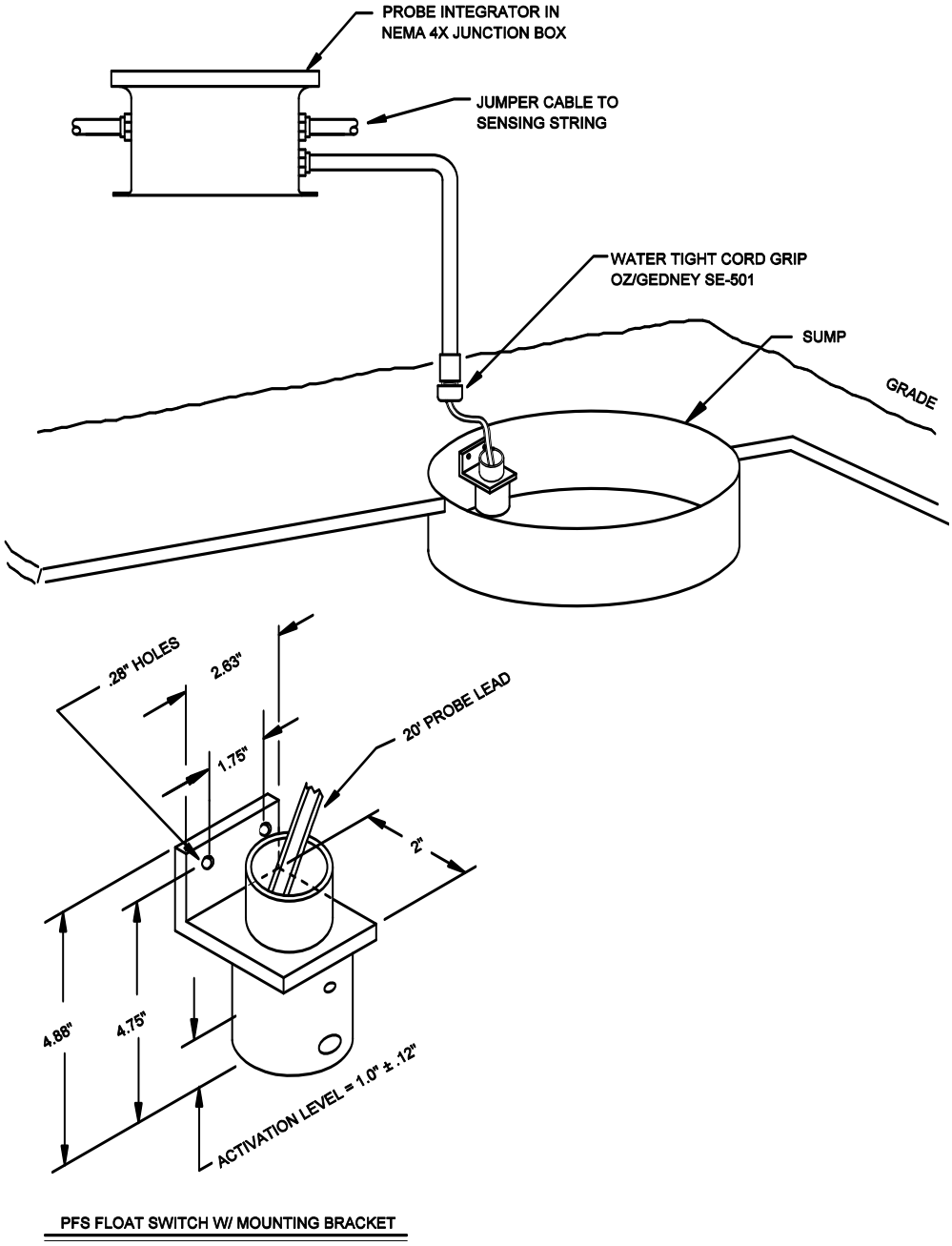

Figure 9-8
Typical PFS Installation

9.6 Probe Tests

Figure 9-9 shows a typical probe integrator test setup. There are four test procedures based on the type of integrator used. The red lead of an ohmmeter should be connected to the center pin of either of the connectors (point A). The black lead should be connected to the connector housing (point B). The ohmmeter should be set to resistance. Follow the test procedure in figure 9-10 to test the probe integrator and probes.

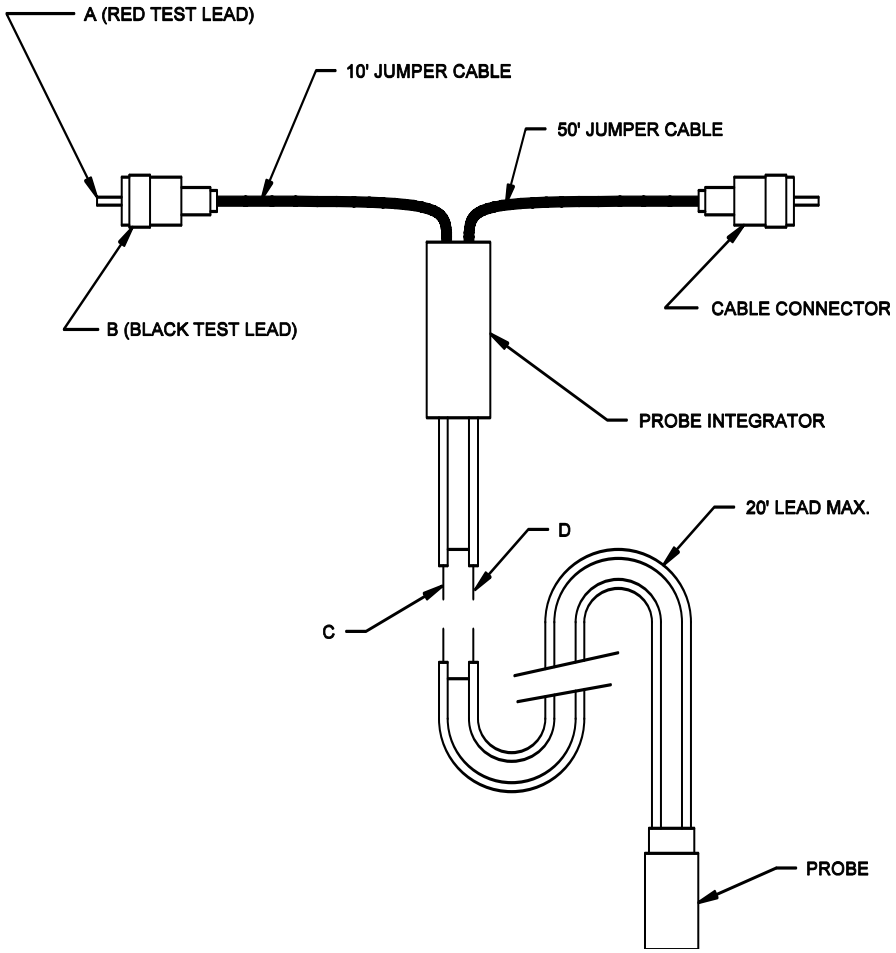

Figure 9-9
Probe Integrator Test Setup

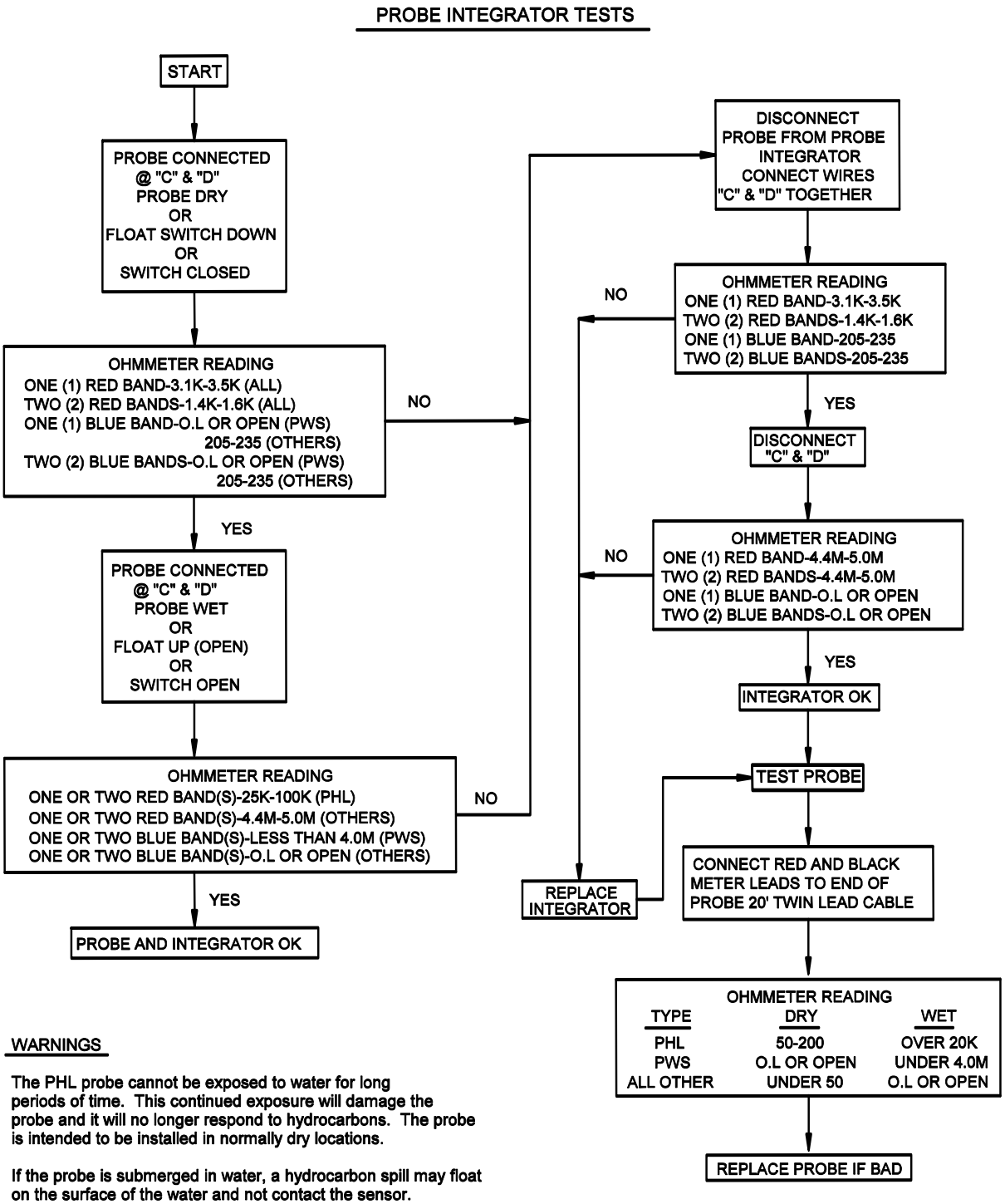

Figure 9-10
Probe Integrator Test

10 ATP Cable in Polyurethane Foam Insulation

10.1 General

This section outlines installation procedures for ATP twisted pair leak detection cable. The cable has two insulated solid copper wires, one red and the other white. It is installed at the factory in polyurethane foam insulation.

The cable is typically installed at the 12 o'clock position in the foam insulation for straight runs. It may be in other orientations for fittings and returns from branch runs, so check the drawing layout for specific job information. **It is very important that the ATP cable be installed straight across each field joint. The pipe should be rotated so the location where the ATP cable exits the polyurethane foam in adjacent pipe sections line up to each other. The exit location is stenciled "ATP" on the pipe jacket.**

10.2 Pipe Installation Precautions

Extra cable extends past each end of the pipe and is coiled around the pipe to protect it during shipping. **The extra cable must be protected from damage and must be moved away from the pipe before welding the pipe. Repeated bending of the cable can also damage it.**

There are several techniques to protect the ATP cable during the pipe welding/brazing process, depending on the pipe dimensions and material. The cable can be exposed to temperatures of 300°F [150°C] for a short time. A wet rag next to the cable can reduce the temperature sufficiently in some cases. **If the ATP cable is within 6" from the weld, additional precautions must be taken.** There are heat block insulator paste products available that can be placed on the pipe between the heat source and the cable. Typically, the process involves applying a thick layer of insulator paste around the pipe and then removing it after the welding operation (per manufacturer's instructions).

10.3 System Configuration

A PAL-AT Leak Detection and Location System can monitor 1 to 4 cables, or sensing strings, depending on the model. **A sensing string used to monitor ATP must only monitor ATP. No jumper cable, probes or other types of sensor cables can be connected to the string.**

An ATP cable string has at least 50' [15 m] of ATP connected to the panel that replaces the standard jumper cable. The ATP "jumper" cable connects directly to the ATP cable in the pipe foam insulation at the start of the pipeline. Watertight electrical conduit should be used to protect the cable and keep it dry. **The watertight requirement for conduit is critical to prevent false alarms.**

10.4 Calibration Points

During the initial setup and calibration of the PAL-AT system, connectors at selected locations, called calibration points, are temporarily disconnected. **Therefore, it is imperative to have accessibility to connectors at calibration points at all times until the system is brought on-line.** The cable at these locations can be prepared for permanent crimp connectors, but the connectors should not be crimped until the calibration process is completed for each section. A reusable connector (CAGOLD) can be installed at these points to allow multiple making/breaking the connection if needed (see section 8.2.4).

10.5 ATP Cable and Connector Testing Procedures

The following "Continuity Test" and "Insulation Test with Wet Cloth" should be performed after each pair of crimp connectors is installed at a field joint, prior to installing the polyurethane foam. In addition, the continuity test and standard insulation test should be performed again, prior to backfilling the pipe. When performing connector tests, if a CAGOLD connector is used, the center pin of the UHF connector is connected to the red wire and the connector housing is connected to the white wire.

A 9-volt digital multimeter, e.g. a Fluke Model 75, **can be used for the continuity test** and a **500-volt megger must be used for the insulation test**.

10.5.1 Continuity Test

The continuity test checks for broken cable, open connectors and poor connections. The test can be performed on the entire ATP sensor string or a partial section.

1. At the start of the pipe (or at the connector in the panel) temporarily connect the red and white wires together. A short jumper wire with alligator clips or wire nut can be used. If a UHF connector is installed, connect the jumper between the UHF connector's center contact and the body of the connector, as shown. **Note: Do not clip onto the threaded coupling ring because it is not tightly secured and will give intermittent readings**

2. Connect the ohmmeter's test leads to the red and white wires on the other end of the cable.

3. The ohmmeter reading should be less than 6 ohms/1000 ft [20 ohms/1000 m] of cable. If it is not, check the jumper wire, test lead connections and repeat the test. If the problem still persists, check the last connector installed and correct the problem.

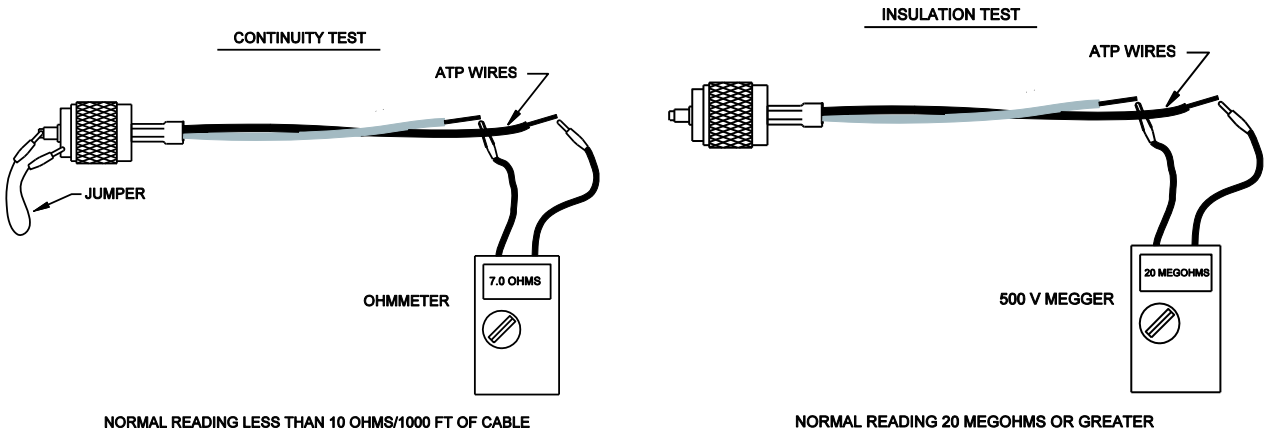

ATP Cable Test Procedures

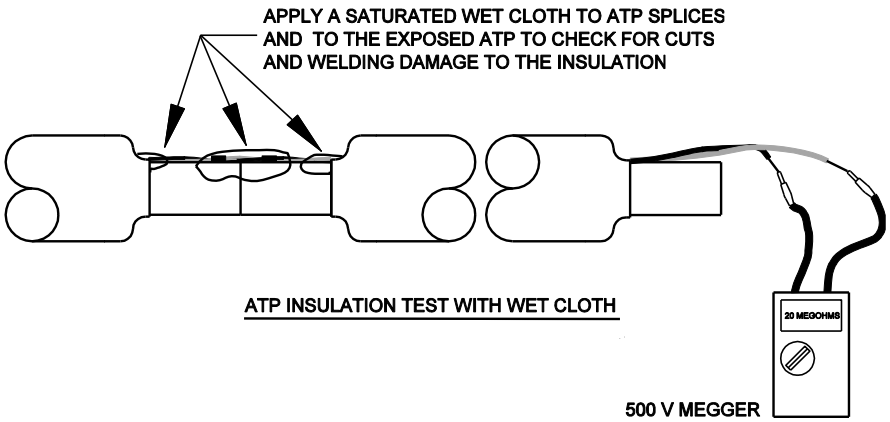

ATP Wet Cloth Test Procedure

10.5.2 Insulation Test

This insulation test checks for a short between the red and white wires or from either wire to the pipe. The test can be performed on the entire ATP sensor string or a partial section.

The ATP cable must be disconnected from the PAL-AT panel when conducting the insulation tests or damage to the equipment will result. A 500-volt megger is used to measure the resistance between the wires and the carrier pipe.

1. If the jumper wire used in the continuity test is still installed, remove it.

2. Perform this test at the unconnected end of the length of ATP.

3. Connect one of the megger test leads to the red wire and the other lead to the pipe. The reading should be “open” or greater than 20 megohms.
4. Check the white wire in a similar manner.
5. Connect one of the megger test leads to the red wire and the other lead to the white wire. The reading should be “open” or greater than 20 megohms.
6. A good cable will have a reading of at least 20 megohms. If any reading is less than 20 megohms, check the last connection for a short and repair the problem. The wire insulation may be damaged or adhesive lined shrink tubing was not installed over a splice and the condition must be corrected.

10.5.3 Insulation Test with Wet Cloth

This insulation test checks for a short between the red and white wires or from either wire to the pipe. This test should be performed when the ATP splice connections are completed at each field joint, before the field joint insulation and jacket are installed.

The ATP cable must be disconnected from the PAL-AT panel when conducting the insulation tests or damage to the equipment will result. A 500-volt megger is used to measure the resistance between the wires and the carrier pipe. Make sure no one is touching the wet cloth when the megger test is conducted.

7. If the jumper wire used in the continuity test is still installed, remove it.
8. Perform this test at the unconnected end of the length of ATP just added to the sensor string.
9. Place a saturated cloth on the splices and exposed ATP cable at the field joint. The water will enter any damaged wire insulation and cause a low megger reading.
10. Connect one of the megger test leads to the red wire and the other lead to the pipe. The reading should be “open” or greater than 20 megohms.
11. Check the white wire in a similar manner.
12. Connect one of the megger test leads to the red wire and the other lead to the white wire. The reading should be “open” or greater than 20 megohms.
13. A good cable will have a reading of at least 20 megohms. If any reading is less than 20 megohms, check the last connection for a short and repair the problem. The wire insulation may be damaged or adhesive lined shrink tubing was not installed over a splice and the condition must be corrected.
14. Remove the wet cloth and dry the pipe before insulating the field joint.

10.6 Start of Run

The initial length of ATP cable from the PAL-AT panel is connected to the ATP cable at the start of the pipe run as shown in figure 10-1.

The ATP cable should be connected to the cable plug in the PAL-AT panel as follows:

Before connecting the cable to the plug, route the excess cable in the enclosure so there will not be excessive strain or twisting at the terminals. Connect the ATP red wire to the center terminal of the cable plug. The white wire should be connected to either of the side terminals of the plug. Insert the plug into the appropriate receptacle as shown. When removing the cable, grip the plug and pull it straight out of the receptacle. **Note the plug and receptacle are polarized so they can only be connected one way**.

10 ATP Cable

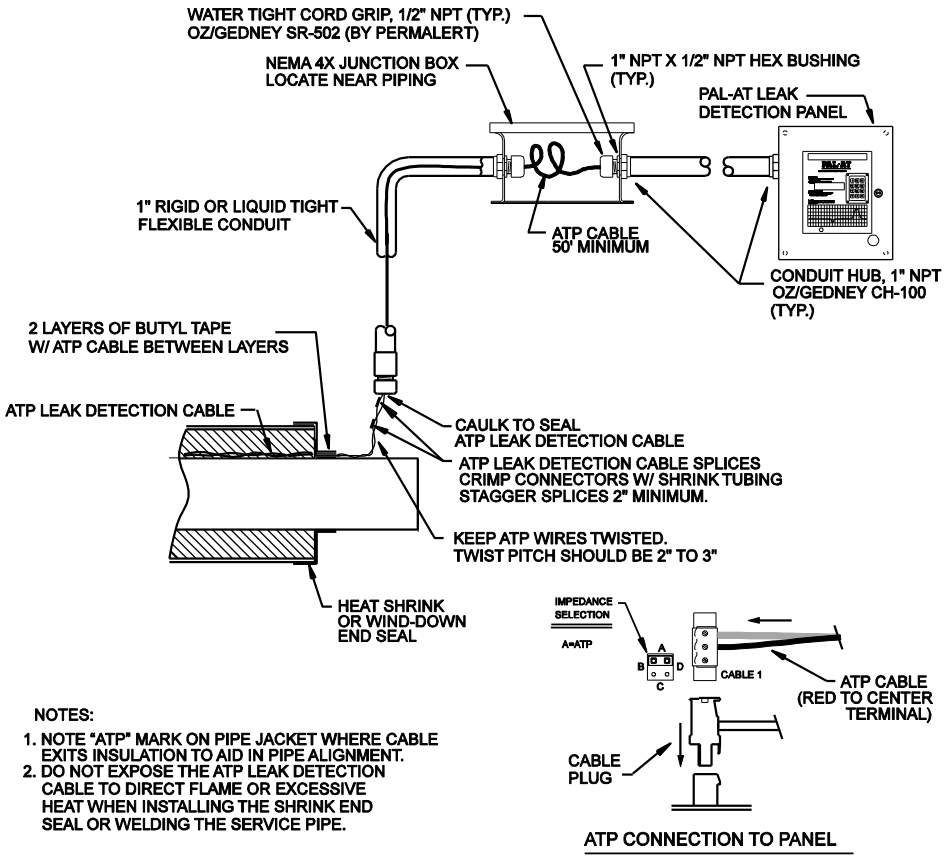

Figure 10-1
ATP Cable Connection - Start of Run

10.7 ATP Cable Splices

The ATP cable is spliced at field joints with crimp connectors using the following steps (see figure 10-2).

1. The red wires should be spliced on one side of the pipe joint and the white wires on the other side, each splice approximately 3"- 4" [75 mm -100 mm] from the end of the pipe.
2. If the ATP cable from the first pipe is not directly in line with the cable from the second pipe, the cable should be routed in as direct a line as possible between the two splice points (refer to Branch Return design in figure 10-2).
3. Cut the red wire from one pipe so the end is centered over the first splice location. Cut the other red wire so the wires meet. Minimize excess slack in the wire.
4. Strip 5/16"-3/8" [7 mm - 9 mm] of insulation from the ends of the red wires. The wire size is 1.5 mm^2 (metric size). If the correct stripping tool, Model T60/124, part number 8068309, is not available, use a tool for #14 AWG. Do not use a smaller die or uncalibrated hand tool, such as wire cutters, that may damage the conductor.
5. **Slide a 1½" [38 mm] long piece of adhesive lined shrink tubing on the wire before crimping the connector**.
6. The crimp tool, Model T60/125, part number 8068308, is ratcheted so the crimp must be completed once it is started. The crimp connector has an indentation (wire stop) in the center. **Two crimps are required, one on each half of the connector. The model T60/125 crimp tool must be used**.
7. Insert one red wire into the connector and place the connector in the T60/125 tool so the die is centered over the half of the connector with the wire. Make sure the wire is fully inserted into the connector until it hits the stop, and then crimp the connector.

8. Repeat step 7 with the other red wire.
9. Try to pull the splice apart with 10-25 lb [4.5-11 kg] force to ensure the wires were correctly seated in the connector.
10. Repeat steps 3-9 for the white wire. The red and white wires must be twisted with a 2" – 3" [50-75 mm] pitch throughout the splice area before crimping the second connector.
11. Slide the 2 pieces of shrink tubing over the splices and shrink the tubing. There should be no copper wire exposed after the tubing shrinks. If so, the connector should be replaced.
12. **There should not be gaps between the red and white twisted wires**. If they are not in contact with each other, twist the wires slightly to eliminate any gap.
13. Test each wire for continuity and insulation as described above.

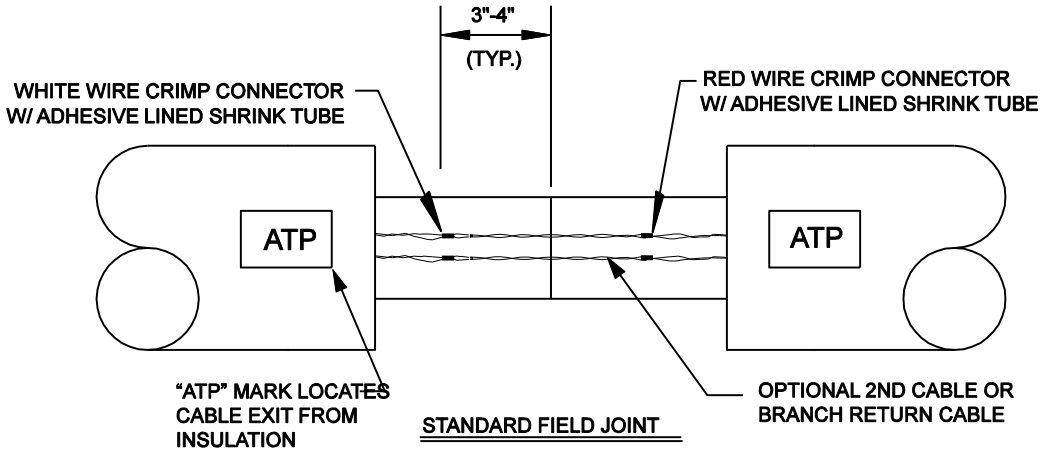

NOTES:

1. NOTE "ATP" MARK ON PIPE JACKET WHERE CABLE EXITS INSULATION TO AID IN PIPE ALIGNMENT.
2. DO NOT EXPOSE THE ATP LEAK DETECTION CABLE TO DIRECT FLAME OR EXCESSIVE HEAT WHEN INSTALLING THE SHRINK END SEAL OR WELDING THE SERVICE PIPE.
3. KEEP ATP LEAK DETECTION CABLE WIRES TWISTED. TWIST PITCH 2" TO 3" IN FIELD JOINT AREA.
4. ONLY USE THE CRIMP CONNECTORS AND CRIMP TOOL SUPPLIED BY PERMALERT.

Figure 10-2
ATP Connection Details

10.8 ATP Cable at Tee Connections

Two lengths of ATP cable are used on branch lines and tees (see figures 10-2 and 10-3). Both cables are typically at the 12 o'clock, position separated 2" - 3" apart. The ATP cable from the preceding section before a tee is connected to the ATP cable using the procedure described above. At the end of the branch, the two cables are spliced together as shown.

The return length of ATP cable from the end of the branch is spliced at the tee to the appropriate ATP cable as shown below using the standard procedure.

An optional second ATP cable may be supplied as a spare or to make all sections available for branch installation.

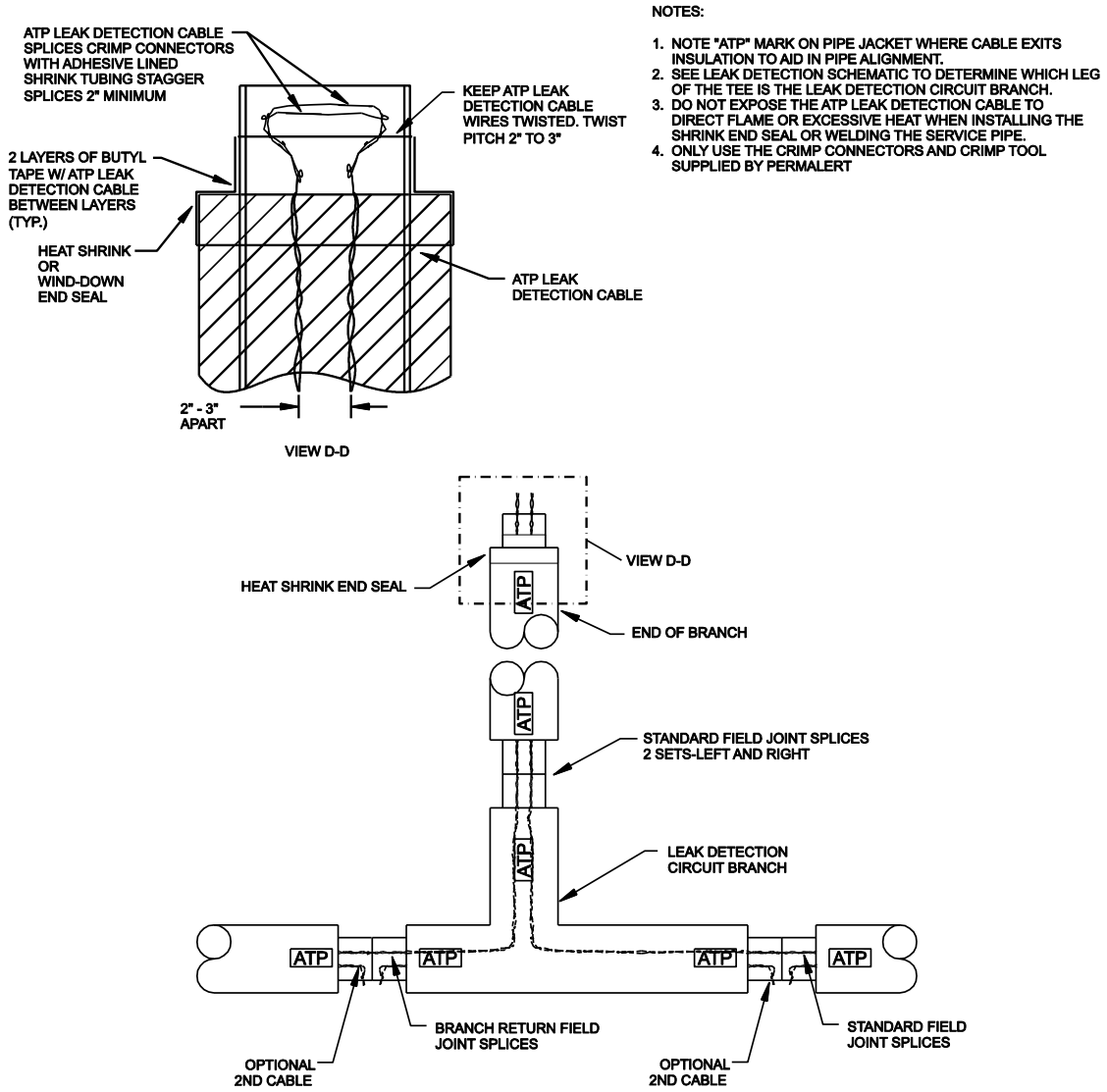

Figure 10-3
ATP Cable at Tee and End of Branch

10.9 End of Run Termination

Install a NEMA 4X [IP66] junction box near the end of the pipe. Electrical conduit should be used to protect the wire if the box is more than a few inches from the pipe end seal. The ATP cable from the pipe should be spliced to 50 ft [15 m] of ATP cable that is coiled in the junction box (100 ft [30 m] is required if the cable length is greater than 3300 ft [1000 m]). Make sure the ATP cable remains twisted. The splices to the red and white wires should be staggered and encapsulated with shrink tubing as described previously.

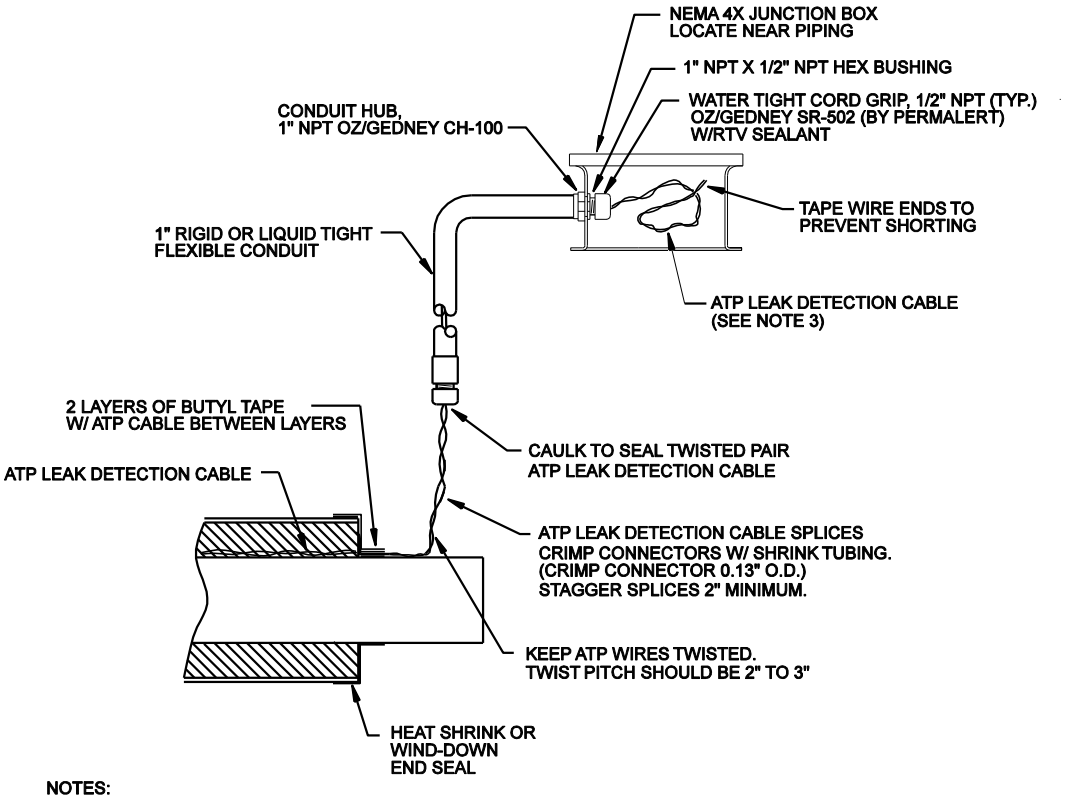

NOTES:

1. DO NOT EXPOSE THE ATP LEAK DETECTION CABLE TO DIRECT FLAME OR EXCESSIVE HEAT WHEN INSTALLING THE SHRINK END SEAL OR WELDING THE SERVICE PIPE.
2. ONLY USE THE CRIMP CONNECTORS AND CRIMP TOOL SUPPLIED BY PERMALERT.
3. ATP LEAK DETECTION CABLE LENGTHS:
   50' MINIMUM FOR LEAK DETECTION CIRCUIT< 3300 FT.
   100 ' MINIMUM FOR LEAK DETECTION CIRCUIT> 3300 FT.
4. NOTE "ATP" MARK ON PIPE JACKET WHERE CABLE EXITS INSULATION TO AID IN PIPE ALIGNMENT.

Figure 10-4

ATP Cable End of Run Detail

10.10 Requirements for Field Joints with Wind-Down End Seals

This procedure only applies to field joints where two pipes with wind-down end seals are joined together. **It should not be performed until immediately before the insulation and shrink sleeve are applied to seal the field joint.**

1. Drill two 1” diameter holes through the jacket **in the wind-down portion of only one** of the end seals. It does not matter which of the two end seals is drilled (see Figure 10-5).
2. **The holes should be spaced at least 2” away from the ATP cable to prevent accidental damage to the cable during drilling**.
3. One hole should be located in the top half on the end seal and the other approximately opposite it in the bottom half.
4. **Be careful not to damage the ATP cable or pipe when drilling the holes.**
5. Test the ATP wires for continuity and insulation as described above after drilling the holes.
6. Proceed with the normal field joint closing procedure.

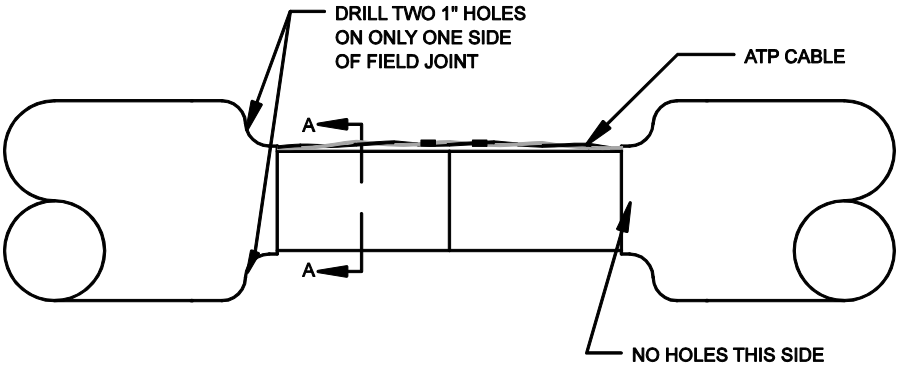

TYPICAL FIELD JOINT W/WIND-DOWN END SEALS

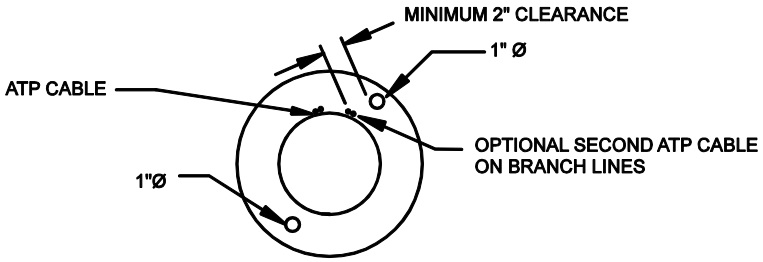

SECTION A-A

Figure 10-5

Wind-Down End Seal Modification

Appendix A – Special Instructions

A.1 Supply Power

Supply Power shall be provided by a UL Recognized Power Supply Cat No PS-35-24, manufactured by Meanwell Enterprises, or a Listed Class 2 Power Supply.

A.2 Control Drawing

Refer to control drawing LD-4901-A0, shown in Figure A-1, for intrinsic safety requirements.

A.3 Zener Barrier Panel (ZBP)

Sensing cable strings that are located in hazardous areas must connect to a Zener Barrier Panel (ZBP), which is located in an unclassified area. Inside the ZBP is one Zener Barrier Assembly (ZBA) for each cable sensing string to connect the PAL-AT panel to the ZBP.

The following information for the ZBP is provided for proper connection and installation:

Model ZBP, Part No. 8028115 1 2 3 4

This Leak Detection Equipment (Associated Apparatus) provides intrinsically safe circuits for use in Class I Division 1 Groups C and D hazardous locations when the unit is installed in accordance with control drawing (Descriptive System Document) LD-4901-A0.

Maximum input voltage: Um = 250 VAC

WARNING - SUBSTITUTION OF COMPONENTS MAY IMPAIR INTRINSIC SAFETY.

Each zener barrier assembly (ZBA) is assigned the following output parameters:

Uo:	16.02 V dc	Co:	1.0 µF
Io:	1.125 A	Lo:	56.5 µH
Po	1.248 W	Lo/Ro:	31.58 µH/Ω

ATEX/IECEx Certificate number: DEMKO 12 ATEX 1014815X
II (1) G [Ex ia] IIB
IECEx UL 11.0028X
[Ex ia Ga] IIB

CE 0539 Ex

Ambient Temperature: -20 °C <= Tamb <= 60 °C

A.4 Probe Integrator

Probe integrators connect probes to the sensing strings. Probes supplied by PermAlert include the probe integrator. The following information for probe integrators is provided for proper connection and installation:

Probe Integrators, part numbers 8027629, 8027930, 8027932, 8027934, for use with ZBP.

ATEX/IECEx Certificate number: DEMKO 12 ATEX 1014815X
II 1G Ex ia IIB T4
IECEx UL 11.0028X
Ex ia Ga IIB T4

CE 0539 Ex

Ambient Temperature: -20 °C <= Tamb <= 60 °C: Temp Code T4

A.5 Probe Integrator Static Precautions

WARNING FOR HAZARDOUS LOCATIONS - Probe integrators are encapsulated in plastic and present a possible electrostatic hazard. They are not intended to be cleaned, but if they are, a damp cloth should be used.

A.6 ZBP Enclosure Fittings

Appropriate fittings, hubs and blanking elements for use on holes on the ZBP enclosure shall contain one of the following type ratings: 4, 6, 6P, 12, 12K or 13, to maintain the type rating of the selected fitting.

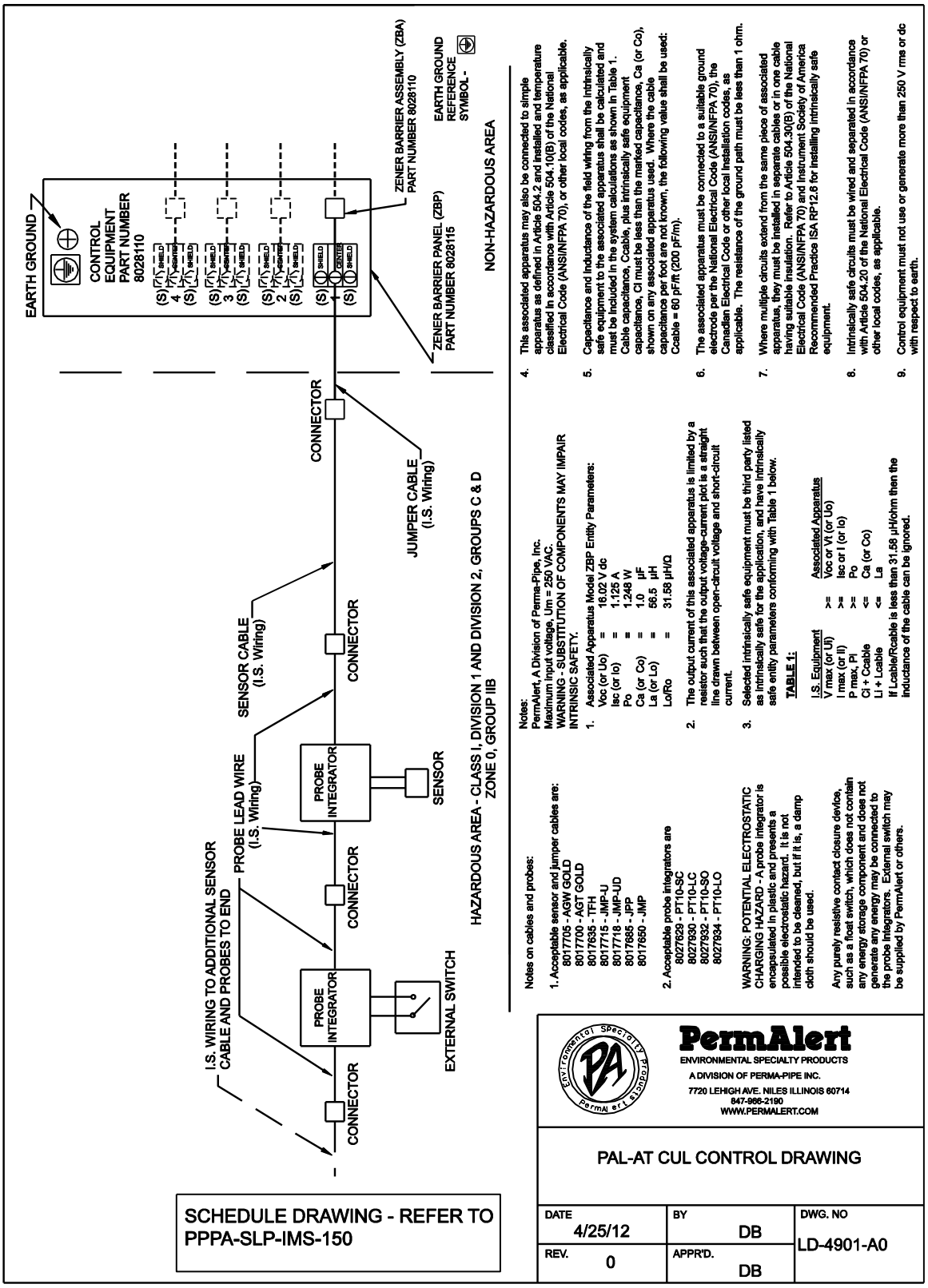

Figure A-1
PAL-AT Control Drawing

WARRANTY

Seller warrants that the PermAlert Leak Detection System (the "System") will be free from defects in materials and workmanship for a period of twelve (12) months from the date of first use of the System or eighteen (18) months from the date of shipment by Seller to Buyer of the System; whichever is earlier. Seller is not responsible for damage to the System occurring in transit or arising from the installation, alteration or repair of the System by persons other than Seller's employees, or from any abnormal or improper use of, negligence with respect to or accident affecting the System. Seller's sole obligation and liability, and Buyer's sole remedy, under this warranty shall be the repair or replacement, at Seller's election, by Seller of any defective materials or workmanship covered by this warranty, without the charge to Buyer. Repaired or replacement materials shall be delivered to Buyer f.o.b. Seller's plant or f.o.b. such other location as Seller shall designate. Seller shall not be responsible for any product returned to Seller without Seller's prior express consent. Buyer shall be responsible for returning the defective or non-conforming product(s) to Seller at Buyer's expense. No claim shall be permitted under the warranty contained herein unless Buyer notifies Seller in writing within ten (10) days after Buyer first hears of facts giving rise to any such claim and unless notice is given within the warranty period as provided above. In order to be valid, any notice sent to Seller in connection with said claim under this warranty must reasonably specify the defect which is the subject of such claim. Buyer shall be responsible for testing and inspecting the System promptly after receipt and thereafter at such intervals as are reasonably prudent so as to inform Seller of any defects which exist in the System. Notwithstanding the filing of a claim hereunder, this warranty shall expire after the warranty period in respect to materials and workmanship which are not then the subject of a proper claim.

To the maximum extent permitted by law, Buyer irrevocably waives all claims against Seller for money damages relating to the condition, use and performance of the goods sold pursuant hereto, including claims based upon tort, strict liability, negligence and product liability. Notwithstanding the provisions of the preceding sentence, if money damages are assessed against Seller, in no event shall Seller's liability for such damages exceed the purchase price of products sold by Seller.

IN NO EVENT, WHETHER BECAUSE OF A BREACH OF WARRANTY OR REPRESENTATION OR ANY OTHER CAUSE, WHETHER BASED UPON CONTRACT, TORT, WARRANTY OR OTHERWISE, ARISING OUT OF THE PERFORMANCE OR NON-PERFORMANCE BY SELLER OF ITS OBLIGATIONS UNDER THIS AGREEMENT OR WITH RESPECT TO THE PRODUCTS SOLD PURSUANT HERETO SHALL SELLER BE LIABLE FOR LOST EARNINGS, INCOME OR PROFITS OR INDIRECT, INCIDENTAL CONSEQUENTIAL DAMAGES.

THE IMPLIED WARRANTIES OF MERCHANTABILITY AND FITNESS FOR A PARTICULAR PURPOSE AND, EXCEPT AS SPECIFICALLY SET FORTH HEREIN, ALL OTHER WARRANTIES AND REPRESENTATIONS, EXPRESS OR IMPLIED, ARE HEREBY DISCLAIMED AND EXCLUDED. NOTHING SHALL BE CONSTRUED AS AN ADDITIONAL WARRANTY UNLESS SPECIFICALLY DESIGNATED AS SUCH IN WRITING AND SIGNED BY THE SELLER, IN WHICH CASE SUCH ADDITIONAL WARRANTY SHALL BE SUBJECT TO THE PROVISIONS OF THE APPROPRIATE PARAGRAPHS HEREIN AS TO DURATION AND LIMITATION OF REMEDY UNLESS SUCH ADDITIONAL WARRANTY EXPRESSLY VARIES SUCH PROVISIONS.

Extended warranty period may be available. Contact PermAlert for more information.

Division of Perma-Pipe, Inc.
6410 West Howard Street
Niles, Illinois 60714-3302
www.permalert.com

©2017, PERMA-PIPE, Inc. All Rights Reserved. (6/17)

DEPARTMENT OF THE ARMY
ALBUQUERQUE DISTRICT, CORPS OF ENGINEERS
ALBUQERQUE DISTRICT OFFICE
4101 JEFFERSON PLAZA NE
ALBUQUERQUE, NM 87109

SUBMITTAL REVIEW VERIFICATION SHEET

PROJECT TITLE: Kirtland BFF Mid-Plume Pump and Treat System Expansion
CONTRACT NUMBER: W912DR-12-D-0006 DM01
DATE RECEIVED: 09-07-2017
DATE REVIEWED: 09-12-2017

DESCRIPTION OF ITEMS REVIEWED:

1. NMDOT Base Course

NO EXCEPTIONS TAKEN.	**X**
EXCEPTIONS AS NOTED ON DRAWINGS AND/OR ATTACHED SHEETS(S). RESUBMISSION NOT REQUIRED.	
EXCEPTIONS AS NOTED ON DRAWINGS AND/OR ATTACHED SHEETS(S). RESUBMISSION REQUIRED.	
RECEIPT ACKKNOWLEDGED.	

Notes:

NOTE: ITEMS REVIEWED AS TO GENERAL LAYOUT ONLY. DIMENSIONS AND QUANTITIES NOT CHECKED. REVIEW DOES NOT RELIEVE CONTRACTOR OF RESPONSIBILITIES FOR ANY ERRORS WHICH MAY EXIST AS CONTRACTOR SHALL BE RESPONSIBLE FOR DIMENSIONS AND DESIGN OF ADEQUATE CORRECTIONS, DETAILS AND SATISFACTORY CONSTRUCTION OF WORK.

SIGNATURE SANCHEZ.AMY.ELIZABETH.1454434338 Digitally signed by SANCHEZ.AMY.ELIZABETH.1454434338 DN: c=US, o=U.S. Government, ou=DoD, ou=PKI, ou=USA, cn=SANCHEZ.AMY.ELIZABETH.1454434338 Date: 2017.09.12 15:14:06 -06'00' **DATE** 9/12/2017

EA Engineering, Science, and Technology, Inc., PBC

Submittal Review Sheet 1

Project Name: **Kirtland BFF Mid-Plume Pump and Treat System Expansion**			Date Received: **9/7/17**	
Project Owner: **Kirtland Air Force Base**			Checked By: **Tyler Curley**	
Contractor: **RMCI, Inc.**	Engineer: **EA Engineering, Science and Technology, Inc., PBC.**		Log Page: **NA**	
Address: **6211 Chappell Rd NE, Albuquerque, NM 87113**	Address: **320 Gold Ave. SW, Suite 1300 Albuquerque, NM 87102**		EA No.: 62599DM01	
			Spec. Section: **NA**	
			Drawing/Detail No.:	
ATTN: Phillip Johnson	ATTN: **Devon Jercinovic**		1st Sub	Re-Sub
Date Transmitted: **09/07/2017**	Prev. Transmittal Date:			

Item No.	No. Copies	Description	Manufacturer	Mfg/Vendor Dwg or Detail	Action Taken*
1	1	Base Course	Duke City Redi Mix		A

The Action Designated Above is in Accordance with the Following Legend:

A – Furnish as Submitted
B – Furnish as Noted
C – Revise and Re-submit
1. Not enough information for review.
2. No reproducible submitted.
3. Copies illegible.
4. Not enough copies submitted.
5. Wrong sequence number.
6. Wrong resubmittal number.
7. Wrong Spec. Section.
8. Wrong form used.
9. See Comments.

D – Rejected
E – Engineer's Review not Required
1. Submittal not required.
2. Supplemental Information. Submittal retained for Information purposes only.
3. Information reviewed and approved on prior submittal.
4. See Comments.

Review is for general compliance with Contract Documents. No responsibility is assumed for correctness of dimensions or detail. Contractor is required to specify deviations from contract requirements. Lack of exceptions noted by Engineer does not waive Contractor's obligation to comply with Drawings and Specifications.

Comments:
Items reviewed and confirmed to meet requirements
Issues in Bold

.Using approved DOT base course.

By: _____ Date: 9/7/17

Distribution: [1] Contractor [1] Engineer [1] Owner

NMDOT Base Course Submittal

Project:	Commercial Submittal (Various)	Report Date:	11/28/16
Client:	Duke City Redi mix	Sample Date:	11/11/16
Address:	7705 Broadway SE	Sampled By:	Client
	Albuquerque, NM 87105	Material Tested:	**Recycled Base Course**
	Attn. Miles Shiver,IV	Date Tested:	11/15/16 - 11/25/16
		Tested By:	Mary P - Annlee
	NMDOT Section 303 (2014)	Visual Description:	Crushed Concrete / Gravel mix
Sample received:	11/11/2016	Sample Location:	Stockpile at Plant
Laboratory #:	ABQ LL262-16	Sample Source:	Various

Sieve Analysis

C-117 & C136/T-11 & T-27

Sieve Size	% Passing	Specs
	NMDOT 2014	
	section 303	
		Type I
1.5" (37.5mm)		
1" (25mm)	100	100
3/4" (19mm)	96	80-100
1/2" (12.5mm)	74	
3/8" (9mm)	62	
#4 (4.75mm)	40	30-60
#8 (2.36mm)		
#10 (2mm)	30	20-45
#16 (1.18mm)		
#30 (0.6mm)		
#40 (0.425mm)	16	
#50 (0.3mm)		
#80 (0.18mm)	8	
#100 (0.15mm)		
#200 (0.75mm)	3.1	3-10

Classification of Soil . A-1-a

Stone fragments,Gravel and Sand

General rating as Excellent to Good

Note : NP = Non Plastic

Type Rammer Mechanical

Rammer ID #:ABQ CA2-4009

Calibration Date: 6/24/2016

Next Calibration Due: 6/24/2017

Test Results

Standard	Physical Properties		Results	Specs
NMDOT Sect 901	Aggregate Index	Aggregate Index	22	35% max
C-88	Soundness	Coarse Soundness Loss, %	1.3	
C-131	L.A.	LA Wear, %	39.4%	
T-96	Abrasion	Grading	B	
D5821	Fractured	1 face	98	50% Min
	Faces	2 faces	97	
D-4318	Atterburg	Liquid Limit	0	25 Max
	Limits	Plastic Limit	0	
T-89/90		Plasticity Index	(NP) 0	6.0 Max
T-180	Proctor	Max Density, (lbs/ft^3)	124.8	
	(Modified)	Optimum Moisture, %	7.8	
	Dry Prep	Method	D	

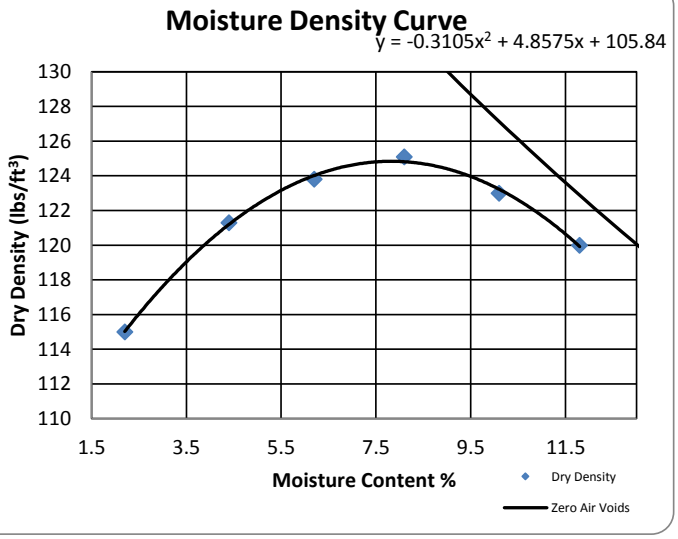

Reports to: fax/email

Miles Shiver, IV mshiver4@dukecityredimix.com

Office 505-877-5777

Respectfully Submitted,

Danny Marquez

Danny Marquez, General Manager

Concrete, Aggregate and Asphalt Testing, LLC
414 Bibb Industrial Dr.
P.O.Box 1228
Las Vegas, NM 87701
505-718-3030

DEPARTMENT OF THE ARMY
ALBUQUERQUE DISTRICT, CORPS OF ENGINEERS
ALBUQERQUE DISTRICT OFFICE
4101 JEFFERSON PLAZA NE
ALBUQUERQUE, NM 87109

SUBMITTAL REVIEW VERIFICATION SHEET

PROJECT TITLE: Kirtland BFF Mid-Plume Pump and Treat System Expansion
CONTRACT NUMBER: W912DR-12-D-0006 DM01
DATE RECEIVED: 09-07-2017
DATE REVIEWED: 09-12-2017

DESCRIPTION OF ITEMS REVIEWED:

1. Crushed Gravel

NO EXCEPTIONS TAKEN.	**X**
EXCEPTIONS AS NOTED ON DRAWINGS AND/OR ATTACHED SHEETS(S). RESUBMISSION NOT REQUIRED.	
EXCEPTIONS AS NOTED ON DRAWINGS AND/OR ATTACHED SHEETS(S). RESUBMISSION REQUIRED.	
RECEIPT ACKKNOWLEDGED.	

Notes:

NOTE: ITEMS REVIEWED AS TO GENERAL LAYOUT ONLY. DIMENSIONS AND QUANTITIES NOT CHECKED. REVIEW DOES NOT RELIEVE CONTRACTOR OF RESPONSIBILITIES FOR ANY ERRORS WHICH MAY EXIST AS CONTRACTOR SHALL BE RESPONSIBLE FOR DIMENSIONS AND DESIGN OF ADEQUATE CORRECTIONS, DETAILS AND SATISFACTORY CONSTRUCTION OF WORK.

SIGNATURE SANCHEZ.AMY.ELIZABETH.1454434338 Digitally signed by SANCHEZ.AMY.ELIZABETH.1454434338 DN: c=US, o=U.S. Government, ou=DoD, ou=PKI, ou=USA, cn=SANCHEZ.AMY.ELIZABETH.1454434338 Date: 2017.09.12 15:27:00 -06'00' **DATE** 9/12/2017

EA Engineering, Science, and Technology, Inc., PBC

Submittal Review Sheet 1

Project Name: **Kirtland BFF Mid-Plume Pump and Treat System Expansion**			Date Received: **9/7/17**	
Project Owner: **Kirtland Air Force Base**			Checked By: **Tyler Curley**	
Contractor: **RMCI, Inc.**	Engineer: **EA Engineering, Science and Technology, Inc., PBC.**		Log Page: **NA**	
Address: **6211 Chappell Rd NE, Albuquerque, NM 87113**	Address: **320 Gold Ave. SW, Suite 1300 Albuquerque, NM 87102**		EA No.: 62599DM01 Spec. Section: **NA** Drawing/Detail No.:	
ATTN: Phillip Johnson	ATTN: **Devon Jercinovic**		1st Sub	Re-Sub
Date Transmitted: **09/07/2017**	Prev. Transmittal Date:			

Item No.	No. Copies	Description	Manufacturer	Mfg/Vendor Dwg or Detail	Action Taken*
1	1	Crushed Gravel	Duke City Redi Mix		A

The Action Designated Above is in Accordance with the Following Legend:

A – Furnish as Submitted
B – Furnish as Noted
C – Revise and Re-submit
1. Not enough information for review.
2. No reproducible submitted.
3. Copies illegible.
4. Not enough copies submitted.
5. Wrong sequence number.
6. Wrong resubmittal number.
7. Wrong Spec. Section.
8. Wrong form used.
9. See Comments.

D – Rejected
E – Engineer's Review not Required
1. Submittal not required.
2. Supplemental Information. Submittal retained for Information purposes only.
3. Information reviewed and approved on prior submittal.
4. See Comments.

Review is for general compliance with Contract Documents. No responsibility is assumed for correctness of dimensions or detail. Contractor is required to specify deviations from contract requirements. Lack of exceptions noted by Engineer does not waive Contractor's obligation to comply with Drawings and Specifications.

Comments:
Items reviewed and confirmed to meet requirements
Issues in Bold

.Using approved DOT crushed gravel.

By: _____ Date: 9/7/17

Distribution: [1] Contractor [1] Engineer [1] Owner

Aggregate Test Report

Project:	Supplier Information	Report Date:	12/21/16
Client:	**Duke City Redi Mix**	Sample Date:	12/1/16
Address:	**7705 Broadway SE**	Sampled By:	David
	Albuquerque, NM 87105	Material Tested:	7/8" Concrete Aggregate
		Date Tested:	12/1-12/12/2016
		Tested By:	David & Mary
		Sample Location:	Stockpile
Laboratory #:	ABQ LL281-16	Sample Source:	South Valley Pit, Los Lunas, NM

Sieve Analysis

C-117 & C136/T-11 & T-27

Sieve Size	% Passing	ASTM C33 #67 Specs
6" (150mm)		
3" (75mm)		
2" (50mm)		
1.5" (37.5mm)		
1" (25mm)	100	**100**
3/4" (19mm)	99	**90-100**
1/2" (12.5mm)	64	
3/8" (9mm)	42	**20-55**
#4 (4.75mm)	8	**0-10**
#8 (2.36mm)	4	**0 - 5**
#10 (2mm)	3	
#16 (1.18mm)	3	
#30 (0.6mm)	3	
#40 (0.425mm)		
#50 (0.3mm)	2	
#80 (0.18mm)		
#100 (0.15mm)	2	
#200 (0.75mm)	1.7	**0 - 1.5**
Fineness Modulus		

Test Results

Standard	Physical Properties		Results	ASTM C33 Specs
C-127	Coarse	Bulk Specific Gravity	2.678	
	Specific	Bulk Specific Gravity, SSD	2.738	
T-85	Gravity &	Apparent Specific Gravity	2.849	
	Absorption	Absorption, %	2.2	
C-142	Clay/Friable	Coarse Aggregate, %	0.1	**< 2.0**
T-112	Particles			
C-131	L.A.	LA Wear, %	26.7	**< 50**
T-96	Abrasion	Grading	B	
C-88	Soundness	Coarse Soundness Loss, %	0.6	**< 18**
	5 cycles			
T-104	$MgSO_4$	Fine Soundness Loss, %		
D5821	Fractured	1 face	100	
	Faces	2 faces	100	

Reports to: fax/email
Miles Shiver Dukecityredimix@aol.com

Respectfully Submitted,

L. Marquez

Lea Ann Marquez, PE

Concrete, Aggregate, and Asphalt Testing, LLC
PO Box 1228
Las Vegas, NM 87701
(505)718-3030

Aggregate Test Report

Project:	Supplier Information	Report Date:	12/21/16
Client:	**Duke City Redi Mix**	Sample Date:	12/1/16
Address:	**7705 Broadway SE**	Sampled By:	David
	Albuquerque, NM 87105	Material Tested:	3/8" Coarse Aggregate
		Date Tested:	12/1-12/12/2016
		Tested By:	David & Mary
		Sample Location:	Stockpile
Laboratory #:	ABQ LL281-16	Sample Source:	South Valley Pit

Sieve Analysis

C-117 & C136/T-11 & T-27

Sieve Size	% Passing	ASTM C33 #89 Specs
6" (150mm)		
3" (75mm)		
2" (50mm)		
1.5" (37.5mm)		
1" (25mm)		
3/4" (19mm)		
1/2" (12.5mm)	100	100
3/8" (9mm)	98	90 - 100
#4 (4.75mm)	49	20 - 55
#8 (2.36mm)	12	5 - 30
#10 (2mm)		
#16 (1.18mm)	6	0 - 10
#30 (0.6mm)	5	
#40 (0.425mm)		
#50 (0.3mm)	4	0 - 5
#80 (0.18mm)		
#100 (0.15mm)	3	
#200 (0.75mm)	2.7	
Fineness Modulus		

Test Results

Standard		Physical Properties	Results	ASTM C33 Specs
C-127	Coarse	Bulk Specific Gravity	2.707	
	Specific	Bulk Specific Gravity, SSD	2.768	
T-85	Gravity &	Apparent Specific Gravity	2.883	
	Absorption	Absorption, %	2.3	
C-142	Clay/Friable	Fine Aggregate, %	0.3	**< 2.0**
T-112	Particles			
D5821	Fractured	1 face	100	
	Faces	2 faces	100	

Reports to: fax/email
Miles Shiver Dukecityredimix@aol.com

Respectfully Submitted,

L. Marquez

Lea Ann Marquez, PE

Concrete, Aggregate, and Asphalt Testing, LLC
PO Box 1228
Las Vegas, NM 87701
(505)718-3030

DEPARTMENT OF THE ARMY
ALBUQUERQUE DISTRICT, CORPS OF ENGINEERS
ALBUQERQUE DISTRICT OFFICE
4101 JEFFERSON PLAZA NE
ALBUQUERQUE, NM 87109

SUBMITTAL REVIEW VERIFICATION SHEET

PROJECT TITLE: Kirtland BFF Mid-Plume Pump and Treat System Expansion
CONTRACT NUMBER: W912DR-12-D-0006 DM01
DATE RECEIVED: 09-11-2017
DATE REVIEWED: 09-12-2017

DESCRIPTION OF ITEMS REVIEWED:

1. Chain Link Fence and Gate

NO EXCEPTIONS TAKEN.	X
EXCEPTIONS AS NOTED ON DRAWINGS AND/OR ATTACHED SHEETS(S). RESUBMISSION NOT REQUIRED.	
EXCEPTIONS AS NOTED ON DRAWINGS AND/OR ATTACHED SHEETS(S). RESUBMISSION REQUIRED.	
RECEIPT ACKKNOWLEDGED.	

Notes:

NOTE: ITEMS REVIEWED AS TO GENERAL LAYOUT ONLY. DIMENSIONS AND QUANTITIES NOT CHECKED. REVIEW DOES NOT RELIEVE CONTRACTOR OF RESPONSIBILITIES FOR ANY ERRORS WHICH MAY EXIST AS CONTRACTOR SHALL BE RESPONSIBLE FOR DIMENSIONS AND DESIGN OF ADEQUATE CORRECTIONS, DETAILS AND SATISFACTORY CONSTRUCTION OF WORK.

SIGNATURE SANCHEZ.AMY.ELIZABETH.1454434338 Digitally signed by SANCHEZ.AMY.ELIZABETH.1454434338 DN: c=US, o=U.S. Government, ou=DoD, ou=PKI, ou=USA, cn=SANCHEZ.AMY.ELIZABETH.1454434338 Date: 2017.09.12 15:32:31 -06'00' **DATE** 9/12/2017

EA Engineering, Science, and Technology, Inc., PBC

Submittal Review Sheet 1

Project Name: **Kirtland BFF Mid-Plume Pump and Treat System Expansion**			Date Received: **9/7/17**	
Project Owner: **Kirtland Air Force Base**			Checked By: **Tyler Curley**	
Contractor: **RMCI, Inc.**	Engineer: **EA Engineering, Science and Technology, Inc., PBC.**		Log Page: **NA**	
Address: **6211 Chappell Rd NE, Albuquerque, NM 87113**	Address: **320 Gold Ave. SW, Suite 1300 Albuquerque, NM 87102**		EA No.: 62599DM01 Spec. Section: **NA** Drawing/Detail No.:	
ATTN: Phillip Johnson	ATTN: **Devon Jercinovic**		1st Sub	Re-Sub
Date Transmitted: **09/11/2017**	Prev. Transmittal Date:			

Item No.	No. Copies	Description	Manufacturer	Mfg/Vendor Dwg or Detail	Action Taken*
1	1	Fencing	Triwest Fence		A

The Action Designated Above is in Accordance with the Following Legend:

A – Furnish as Submitted
B – Furnish as Noted
C – Revise and Re-submit
1. Not enough information for review.
2. No reproducible submitted.
3. Copies illegible.
4. Not enough copies submitted.
5. Wrong sequence number.
6. Wrong resubmittal number.
7. Wrong Spec. Section.
8. Wrong form used.
9. See Comments.

D – Rejected
E – Engineer's Review not Required
1. Submittal not required.
2. Supplemental Information. Submittal retained for Information purposes only.
3. Information reviewed and approved on prior submittal.
4. See Comments.

Review is for general compliance with Contract Documents. No responsibility is assumed for correctness of dimensions or detail. Contractor is required to specify deviations from contract requirements. Lack of exceptions noted by Engineer does not waive Contractor's obligation to comply with Drawings and Specifications.

Comments:
Items reviewed and confirmed to meet requirements
Issues in Bold

Fencing will match VA chain link fencing.

By: _____ Date: 9/11/17

Distribution: [1] Contractor [1] Engineer [1] Owner

TRIWEST FENCE LLC

110 Denny Road
Bernalillo, NM 87004
Telephone (505) 400-0373
Fax (505) 898-3697

CHAIN LINK FENCE AND GATE WITH PVC SLATS

PROJECT:

GROUNDWATER CONVEYANCE INFASTRUCTURE INSTALLATION KAFB, NM

General Contractor

RMCI, INC.

FENCING CONTRACTOR:

TRIWEST FENCE LLC

Bernalillo, New Mexico

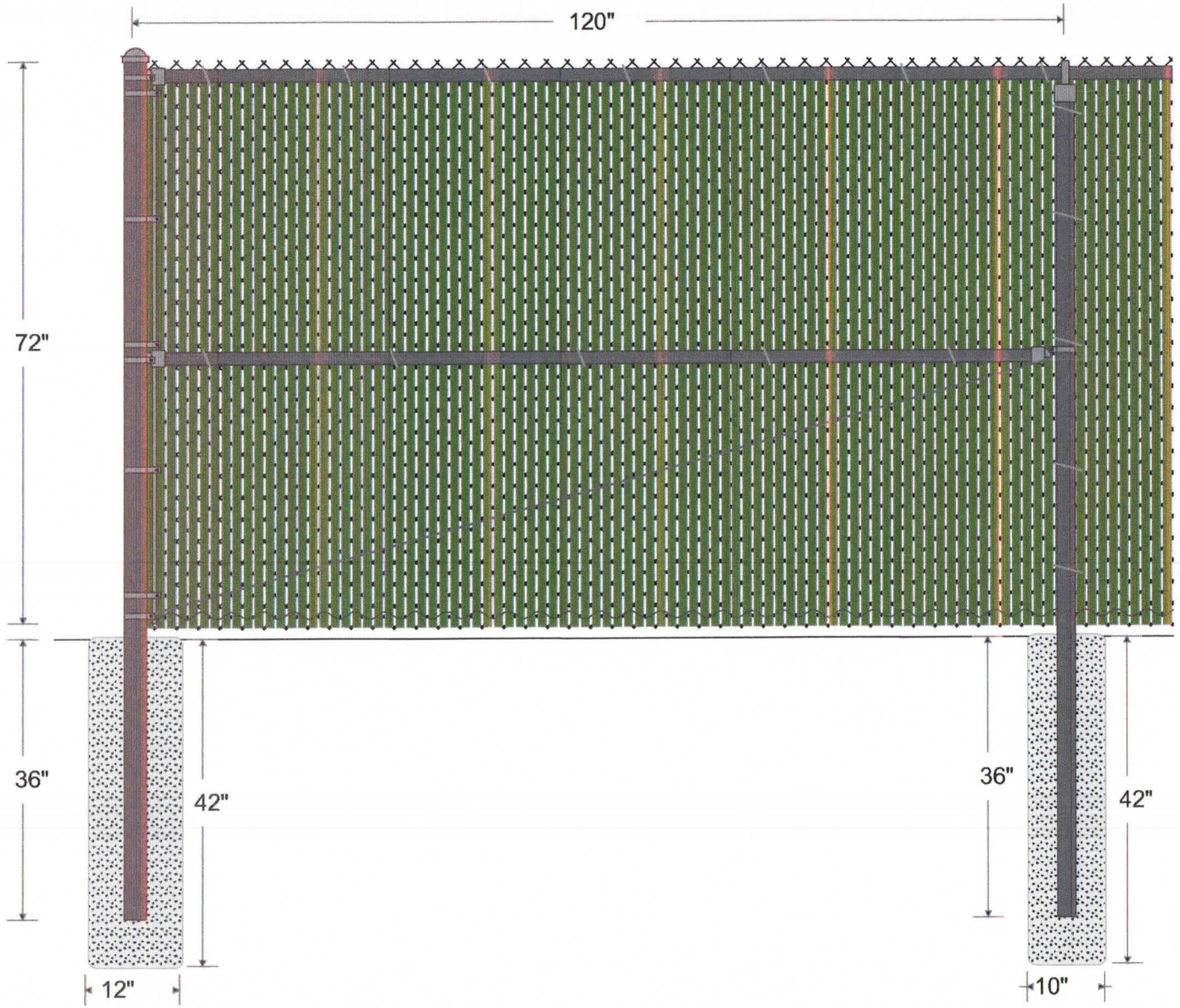

FABRIC: 72" 9 GA. G.A.W. (2" Mesh) BK CHAIN LINK FABRIC.

TOP RAIL: 1 5/8" O.D. DQ-40 PIPE, 1.83 lbs. per foot. Top rail 21' in length, joined with 1 5/8" SLEEVE.

LINE POST: 2 3/8" O.D. DQ-40 PIPE POST, 3.11 lbs. per foot. Line posts set 10' on center maximum spacing. Concrete footing: 10" diameter, 36" depth.

TERMINAL POST: 2 7/8" O.D. DQ-40 PIPE POST, 4.64 lbs. per foot. Concrete footing: 12" diameter, 36" depth.

BRACING: Terminal posts braced and trussed to the nearest line post with 1 5/8" O.D. DQ-40 PIPE and 3/8" TRUSS ROD & IND. TRUSS ROD TIGHTENER.

TENSION WIRE: 7 GA. COIL SPRING GALVANIZED (COIL) TENSION WIRE attached to bottom of fence fabric with 9 GA. STEEL HOG RING spaced 18" on center.

FITTINGS: REGULAR BRACE BAND & CARRIAGE BOLT, PRESSED STEEL RAIL-END, PRESSED STEEL EYE-TOP, PRESSED STEEL CAP, 3/16" X 3/4" TENSION BAR, REGULAR TENSION BAND & CARRIAGE BOLT.

TIE WIRE: 8 1/4" 9 GA. STEEL TIE WIRE & 6 1/2" 12 GA. STEEL TIE WIRE spaced 15" on center for line posts & 18" on center for rails.

PVC SLATS, GREEN, BOTTOM LOCK TUBULAR

POST FOOTING: TRUCK POURED CONCRETE.

TRIWEST FENCE LLC

TriWest Fence LLC
110 Denny Road
Bernalillo, NM 87004
505-898-3678

GROUNDWATER CONVEYANCE INFASTR
KAFB, NM

LINE OF FENCE

Drawn: EA 06/05/2017
File: RMCI BASE WORK

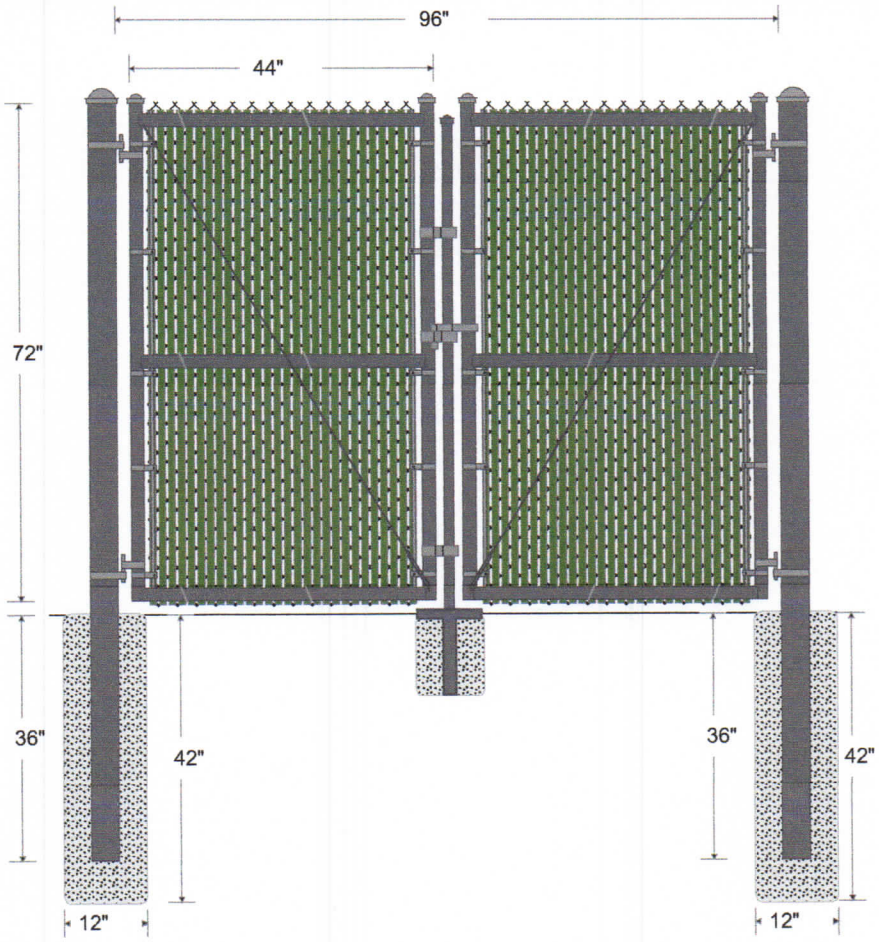

FABRIC: 72" 9 GA. G.A.W. (2" Mesh) BK CHAIN LINK FABRIC.

BRACING: Terminal posts braced and trussed to the nearest line post with 1 5/8" O.D. DQ-40 PIPE and 3/8" TRUSS ROD & IND. TRUSS ROD TIGHTENER.

GATES: Framework of 1 7/8" DQ-40 PIPE, 2.28 lbs. per foot. Gates braced and trussed as necessary. Same fabric as fence.

GATE POST: 4" O.D. DQ-40 PIPE POST, 6.56 lbs. per foot. Concrete footing: 12" diameter, 36" depth.

FITTINGS: REGULAR BRACE BAND & CARRIAGE BOLT, PRESSED STEEL RAIL-END, PRESSED STEEL EYE-TOP, PRESSED STEEL CAP, 3/16" X 3/4" TENSION BAR, REGULAR TENSION BAND & CARRIAGE BOLT.

TIE WIRE: 8 1/4" 9 GA. STEEL TIE WIRE & 6 1/2" 12 GA. STEEL TIE WIRE spaced 15" on center for line posts & 18" on center for rails.

POST FOOTING: TRUCK POURED CONCRETE.

TRIWEST FENCE LLC

TriWest Fence LLC
110 Denny Road
Bernalillo, NM 87004
505-898-3678

GROUNDWATER CONVEYANCE INFASTR
KAFB , NM

8' DOUBLE GATE, 1 7/8" DQ-40 PIPE FRAME

Drawn: EA 06/05/2017
File: RMCI BASE WORK

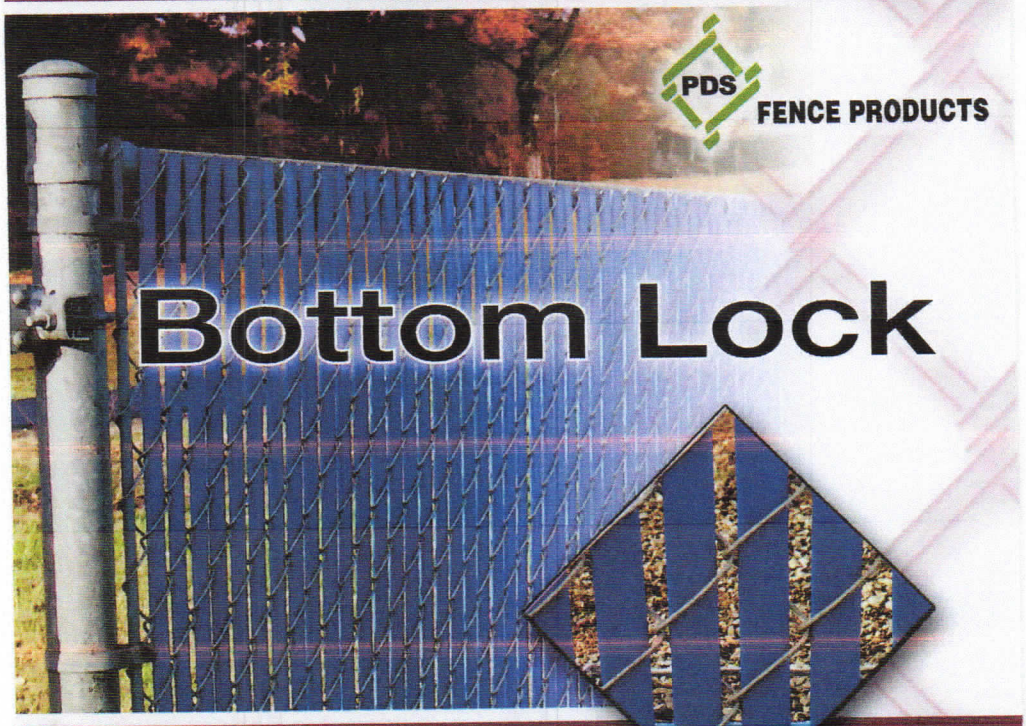

Decorative Inserts for Chain Link Fence

- Easy Installation
- Low Maintenance
- Secure Bottom Rail Makes Installation a "Snap"
- Durable, Long-Lasting Design
- 9 Distinctive Colors
- 25-Year Limited Warranty
- 2" and 2 1/4" Mesh (1 3/4 available)
- Commercial, Residential, Industrial Use

US Patent 6,068,243 / 5,165,664 / 5,234,199

West Coast:
3110 70th Avenue East
Tacoma, WA 98424
1-800-822-7528 (SLAT)

PEXCO

www.pdsfence.com
www.pexco.com

East Coast:
764 S. Athol Rd.
Athol, MA 01331
1-800-755-7528 (SLAT)

PVC Slats are to match what is existing. The attached photo represents what is existing near the site.

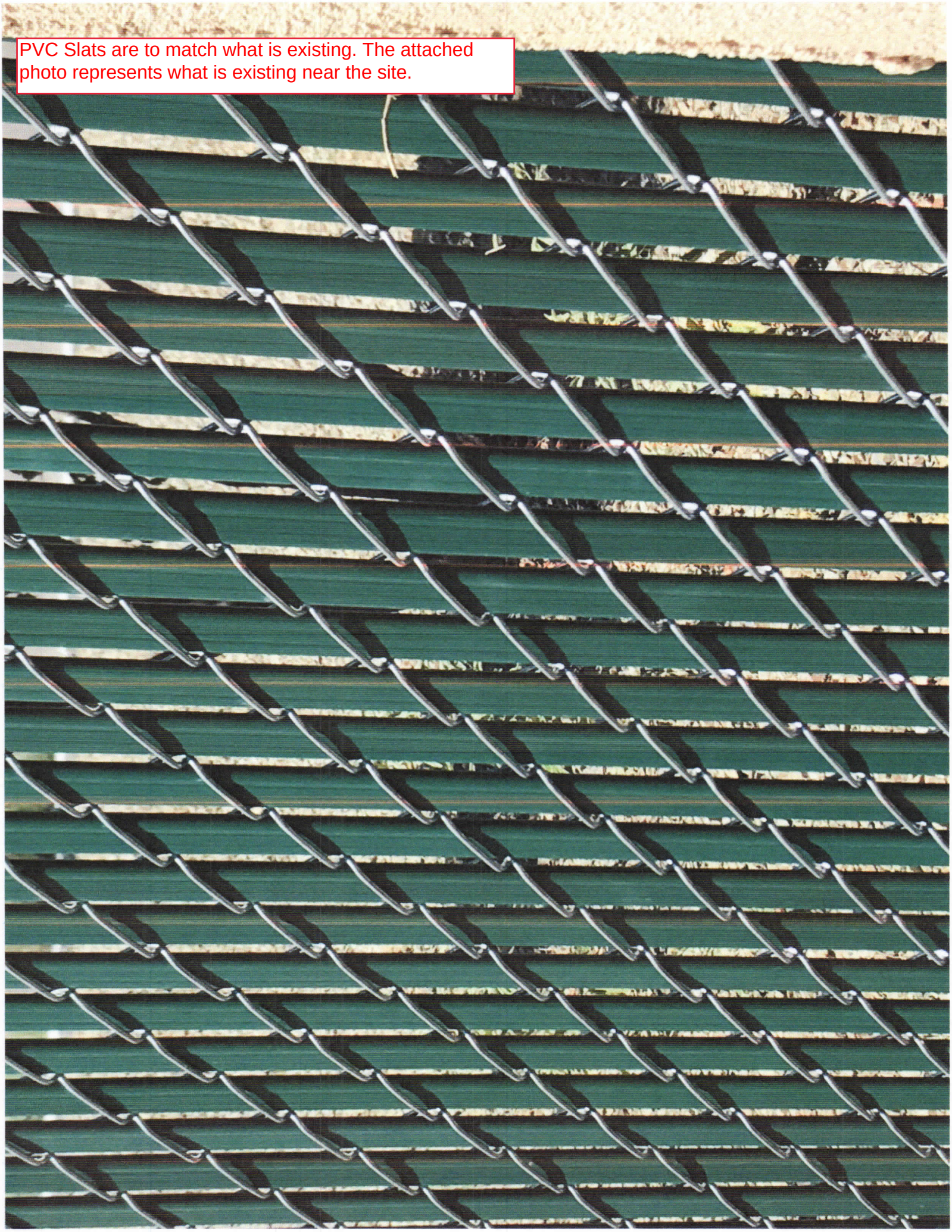

DEPARTMENT OF THE ARMY
ALBUQUERQUE DISTRICT, CORPS OF ENGINEERS
ALBUQERQUE DISTRICT OFFICE
4101 JEFFERSON PLAZA NE
ALBUQUERQUE, NM 87109

SUBMITTAL REVIEW VERIFICATION SHEET

PROJECT TITLE: Kirtland BFF Mid-Plume Pump and Treat System Expansion
CONTRACT NUMBER: W912DR-12-D-0006 DM01
DATE RECEIVED: 09-13-2017
DATE REVIEWED: 09-18-2017

DESCRIPTION OF ITEMS REVIEWED:

1. Precast Vaults

NO EXCEPTIONS TAKEN.	**X**
EXCEPTIONS AS NOTED ON DRAWINGS AND/OR ATTACHED SHEETS(S). RESUBMISSION NOT REQUIRED.	
EXCEPTIONS AS NOTED ON DRAWINGS AND/OR ATTACHED SHEETS(S). RESUBMISSION REQUIRED.	
RECEIPT ACKKNOWLEDGED.	

Notes:

NOTE: ITEMS REVIEWED AS TO GENERAL LAYOUT ONLY. DIMENSIONS AND QUANTITIES NOT CHECKED. REVIEW DOES NOT RELIEVE CONTRACTOR OF RESPONSIBILITIES FOR ANY ERRORS WHICH MAY EXIST AS CONTRACTOR SHALL BE RESPONSIBLE FOR DIMENSIONS AND DESIGN OF ADEQUATE CORRECTIONS, DETAILS AND SATISFACTORY CONSTRUCTION OF WORK.

SIGNATURE SANCHEZ.AMY.ELIZABETH.1454434338 Digitally signed by SANCHEZ.AMY.ELIZABETH.1454434338 DN: c=US, o=U.S. Government, ou=DoD, ou=PKI, ou=USA, cn=SANCHEZ.AMY.ELIZABETH.1454434338 Date: 2017.09.18 12:50:32 -06'00' **DATE** 9/18/2017

EA Engineering, Science, and Technology, Inc., PBC

Submittal Review Sheet 1

Project Name: **Kirtland BFF Mid-Plume Pump and Treat System Expansion**			Date Received: **9/7/17**		
Project Owner: **Kirtland Air Force Base**			Checked By: **Tyler Curley**		
Contractor: **RMCI, Inc.**	Engineer: **EA Engineering, Science and Technology, Inc., PBC.**		Log Page: **NA**		
Address: **6211 Chappell Rd NE, Albuquerque, NM 87113**	Address: **320 Gold Ave. SW, Suite 1300 Albuquerque, NM 87102**		EA No.: 62599DM01		
			Spec. Section: **NA**		
			Drawing/Detail No.:		
ATTN: Phillip Johnson	ATTN: **Devon Jercinovic**		1st Sub		Re-Sub
Date Transmitted: **09/13/2017**	Prev. Transmittal Date:				

Item No.	No. Copies	Description	Manufacturer	Mfg/Vendor Dwg or Detail	Action Taken*
1	1	Precast Vault	All American Precast, INC		A

The Action Designated Above is in Accordance with the Following Legend:

A – Furnish as Submitted
B – Furnish as Noted
C – Revise and Re-submit
1. Not enough information for review.
2. No reproducible submitted.
3. Copies illegible.
4. Not enough copies submitted.
5. Wrong sequence number.
6. Wrong resubmittal number.
7. Wrong Spec. Section.
8. Wrong form used.
9. See Comments.

D – Rejected
E – Engineer's Review not Required
1. Submittal not required.
2. Supplemental Information. Submittal retained for Information purposes only.
3. Information reviewed and approved on prior submittal.
4. See Comments.

Review is for general compliance with Contract Documents. No responsibility is assumed for correctness of dimensions or detail. Contractor is required to specify deviations from contract requirements. Lack of exceptions noted by Engineer does not waive Contractor's obligation to comply with Drawings and Specifications.

Comments:
Items reviewed and confirmed to meet requirements
Issues in Bold

Precast vaults meet specifications

By: _____ Date: 9/13/17

Distribution: [1] Contractor [1] Engineer [1] Owner

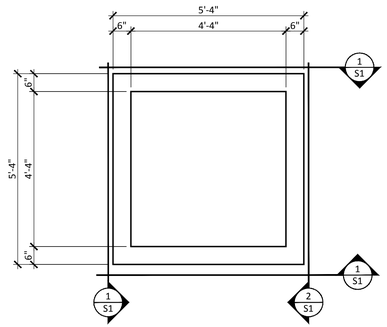

BASE PLAN

SCALE: 1/2"=1'-0"

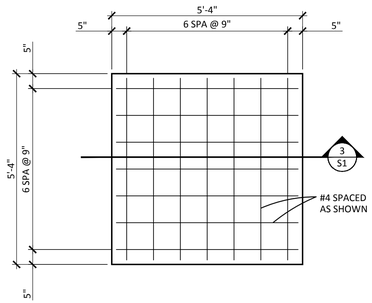

BASE REINFORCING PLAN

SCALE: 1/2"=1'-0"

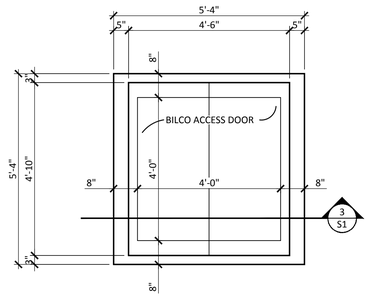

LID PLAN

SCALE: 1/2"=1'-0"

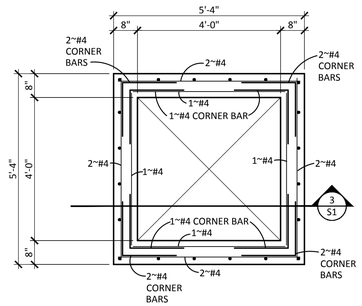

LID REINFORCING PLAN

SCALE: 1/2"=1'-0"

GENERAL STRUCTURAL NOTES

1. CODES AND MANUALS:
   International Building Code, 2009 Edition
   ACI 318-05
2. DESIGN LOADS:
   A. Horizontal:
      1. Live Load: 150 psf on lid
      2. Equivalent Lateral Pressure: 60 pcf
3. GENERAL:
   A. The Contractor shall verify all dimensions in the field.
   B. The Contractor shall be responsible for providing safe and adequate shoring for all parts of the structure during construction.
4. MATERIALS:
   A. Cast-in-place concrete:
      1. Hardrock concrete (unit wt.=150 pcf)
         a. 4,000 psi @ 28 days (air entrained) concrete.
   B. Reinforcing steel:
      1. All reinforcing steel shall conform to ASTM A615 Grade 60, except stirrups and ties shall be Grade 40.
      2. The contractor shall be responsible to see that all rebar is properly aligned and tied in place before placing concrete.

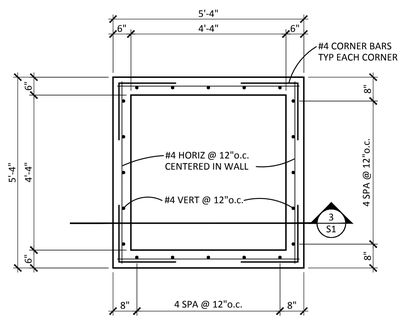

WALL REINFORCING PLAN

1/2"=1'-0"

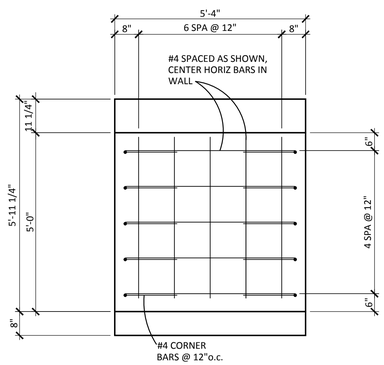

1 S1 NOTE:
REVIEWER PROVIDE SIZE &
LOCATION OF WALL OPENINGS

1/2"=1'-0"

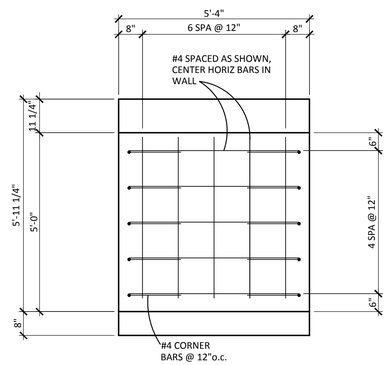

2 S1

1/2"=1'-0"

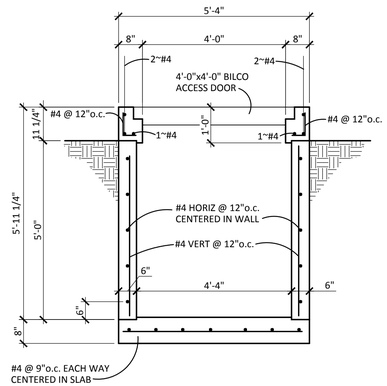

3 S1

1/2"=1'-0"

Side penetrations will be cored/cut in field

MacCORNACK ENGINEERING, LLC
1776 Montaño Rd. NW STE 24
Los Ranchos, New Mexico 87107

CLIENT: **ALL AMERICAN PRECAST, INC.**
3167 San Mateo NE Box 340
Albuquerque, N.M.

PROJECT: **PRECAST CONCRETE VAULTS**
BULK FUELS FACILITY
Kirtland Air Force Base

DRAWING: **VAULT PLANS, SECTIONS and GENERAL STRUCTURAL NOTES**

JOB NO:	DATE:	SHEET NO:
A47-015	08/30/17	**S1**

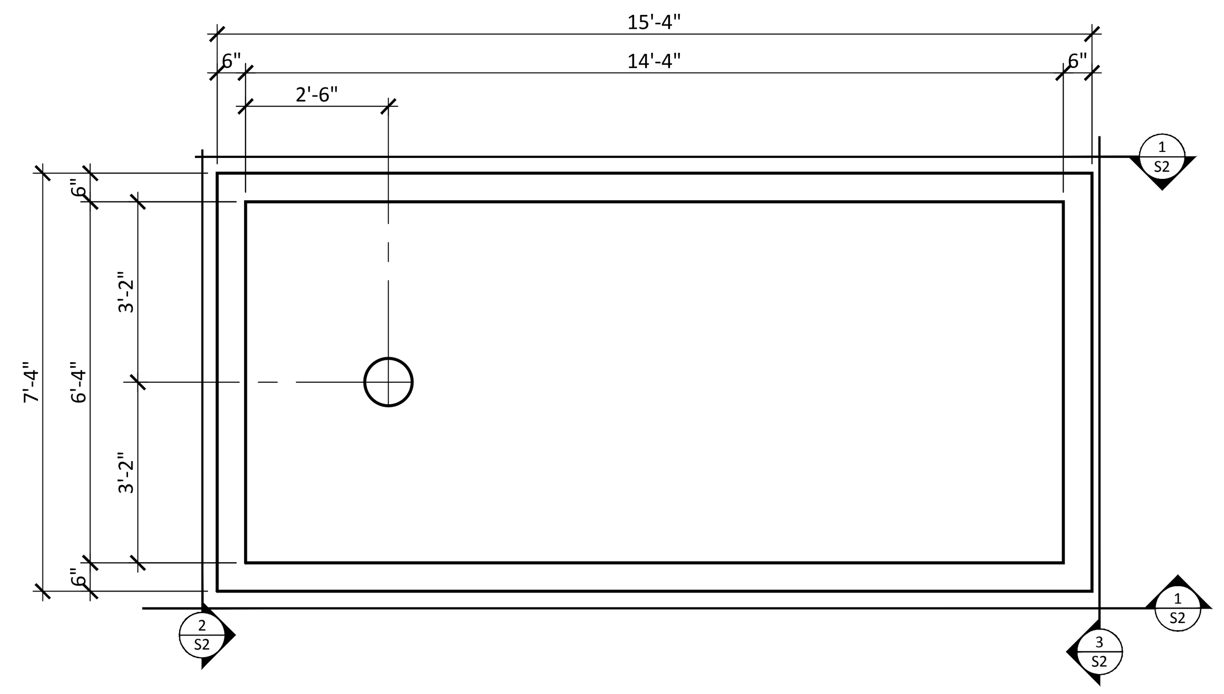

BASE PLAN

3/8"=1'-0"

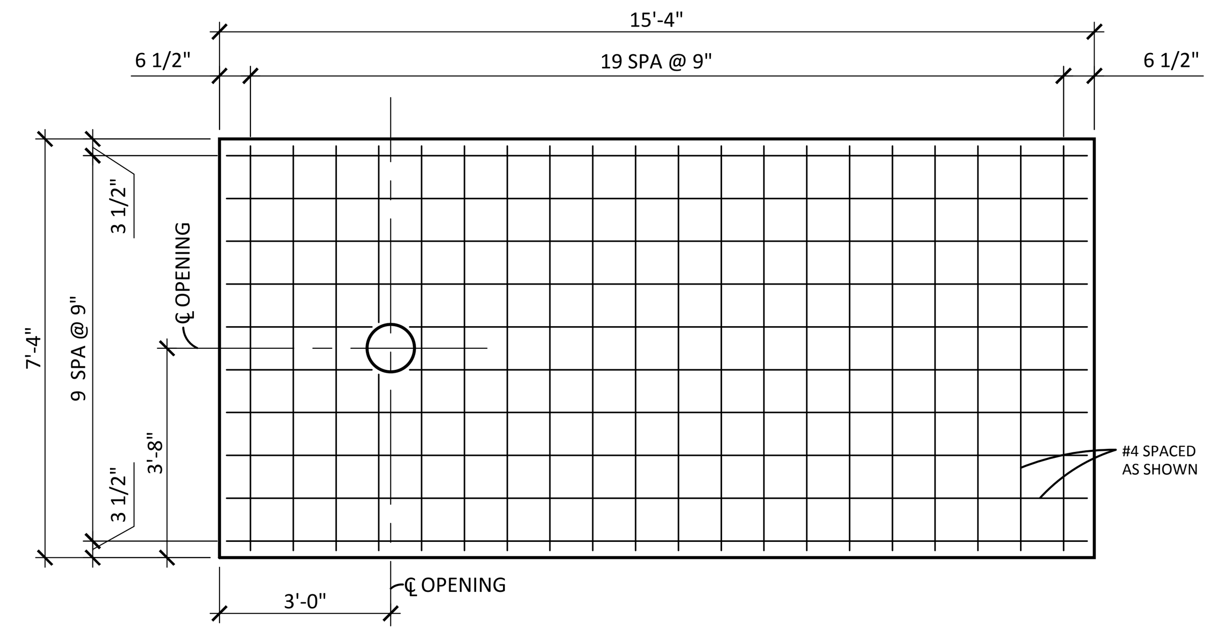

BASE REINFORCING PLAN

3/8"=1'-0"

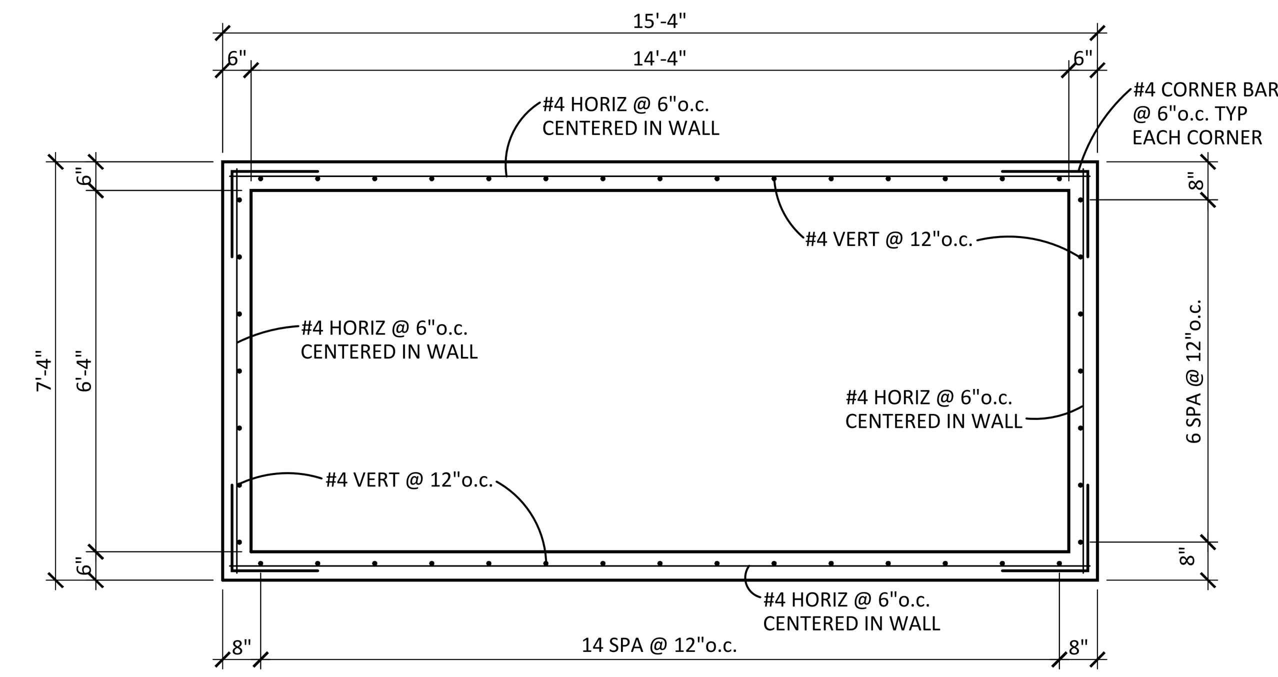

WALL REINFORCING PLAN

3/8"=1'-0"

GENERAL STRUCTURAL NOTES

1. CODES AND MANUALS:
   International Building Code, 2009 Edition
   ACI 318-05
2. DESIGN LOADS:
   A. Horizontal:
      1. Live Load: 150 psf on lid
      2. Equivalent Lateral Pressure: 60 pcf
3. GENERAL:
   A. The Contractor shall verify all dimensions in the field.
   B. The Contractor shall be responsible for providing safe and adequate shoring for all parts of the structure during construction.
4. MATERIALS:
   A. Cast-in-place concrete:
      1. Hardrock concrete (unit wt.=150 pcf)
         a. 4,000 psi @ 28 days (air entrained) concrete.
   B. Reinforcing steel:
      1. All reinforcing steel shall conform to ASTM A615 Grade 60, except stirrups and ties shall be Grade 40.
      2. The contractor shall be responsible to see that all rebar is properly aligned and tied in place before placing concrete.

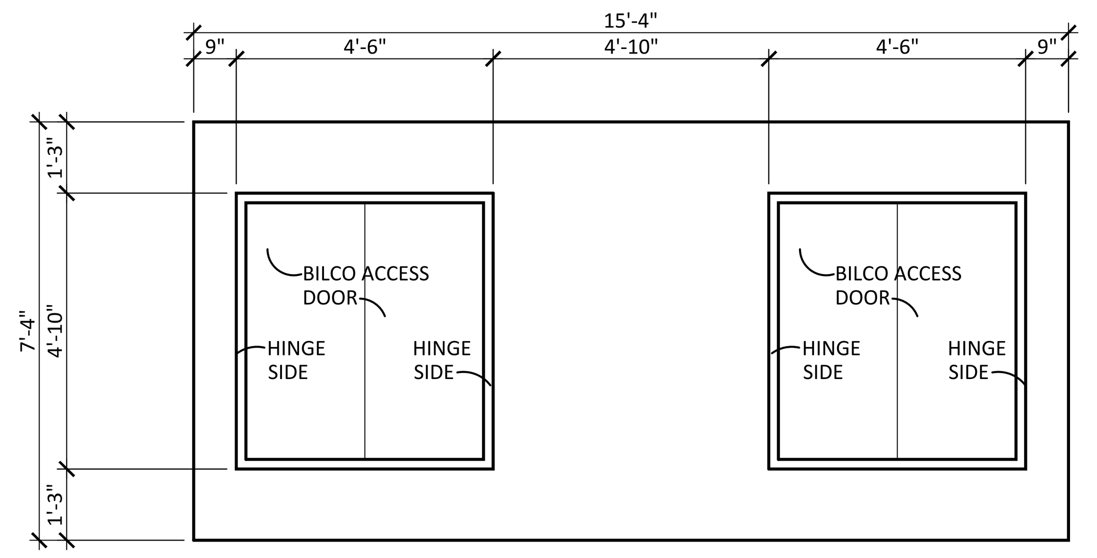

LID PLAN

3/8"=1'-0"

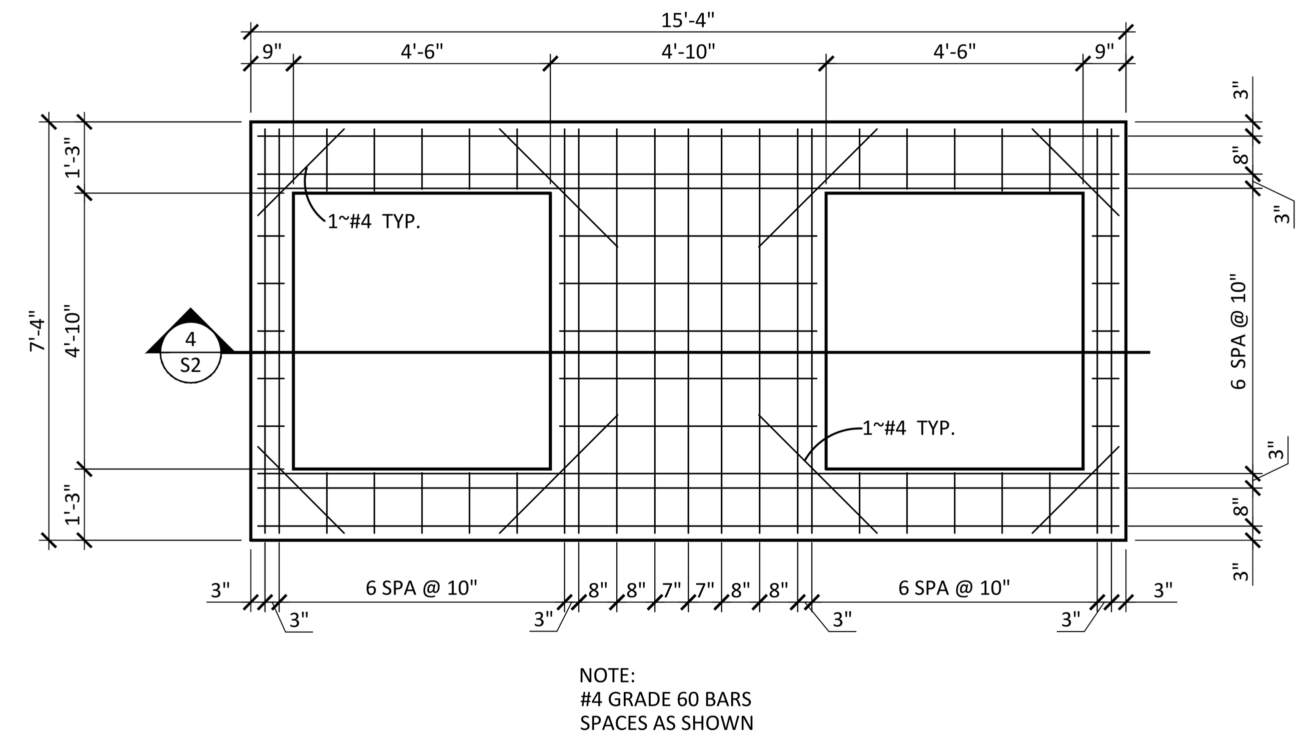

NOTE:
#4 GRADE 60 BARS
SPACES AS SHOWN

LID REINFORCING PLAN ~ TOP MAT

3/8"=1'-0"

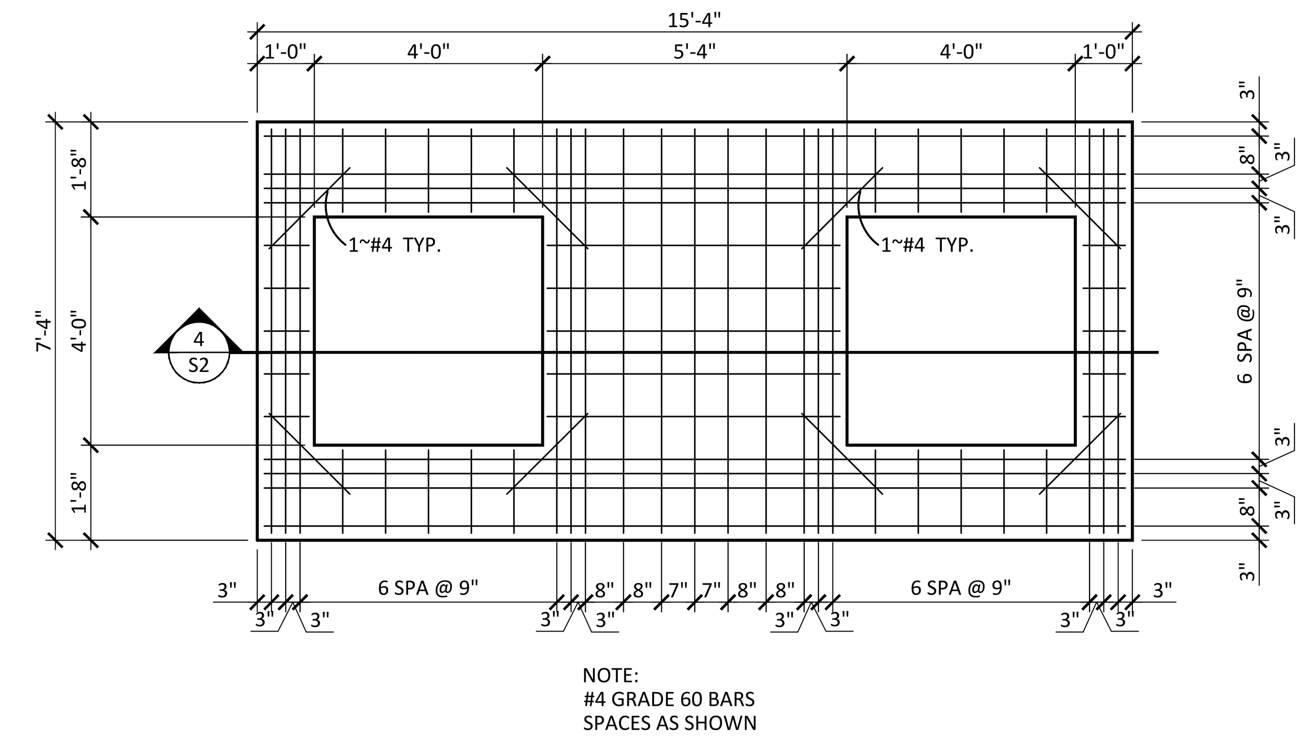

NOTE:
#4 GRADE 60 BARS
SPACES AS SHOWN

LID REINFORCING PLAN ~ BOTTOM MAT

3/8"=1'-0"

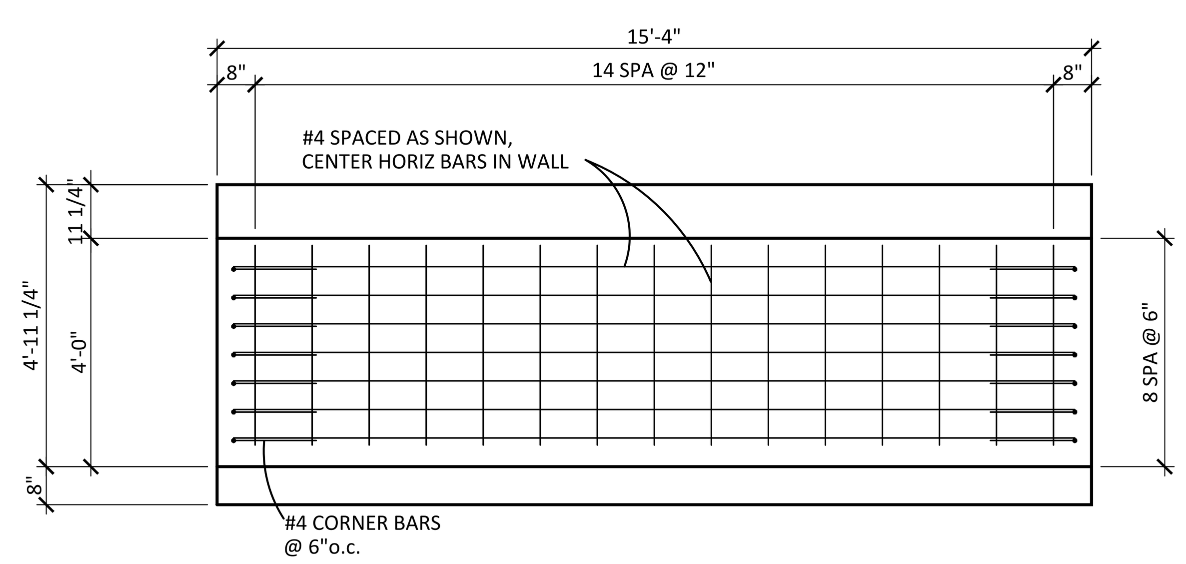

NOTE:
REVIEWER PROVIDE SIZE &
LOCATION OF WALL OPENINGS

1 S2

3/8"=1'-0"

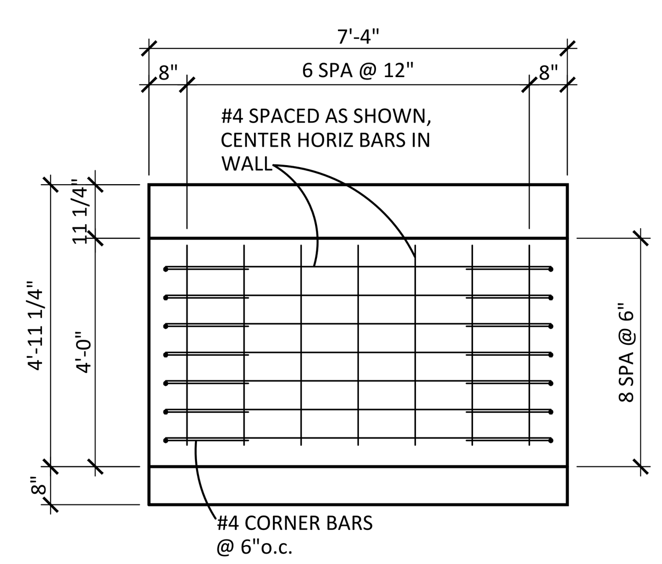

2 S2

3/8"=1'-0"

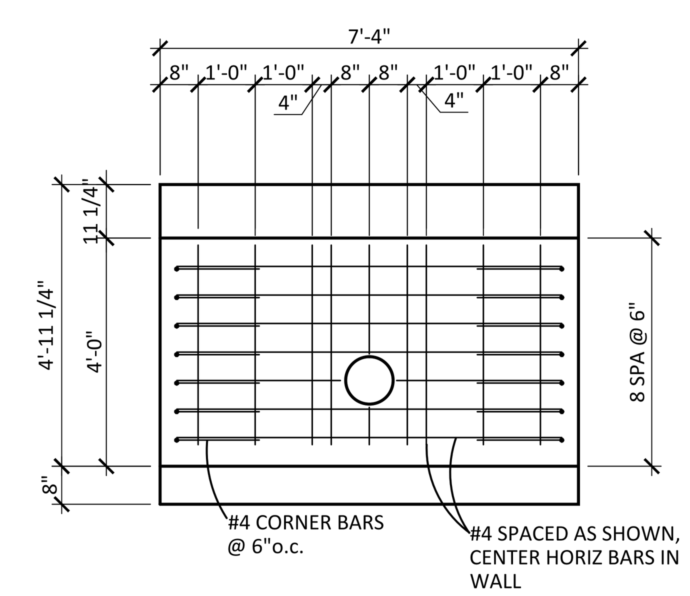

NOTE:
REVIEWER PROVIDE SIZE &
LOCATION OF WALL OPENINGS

3 S2

3/8"=1'-0"

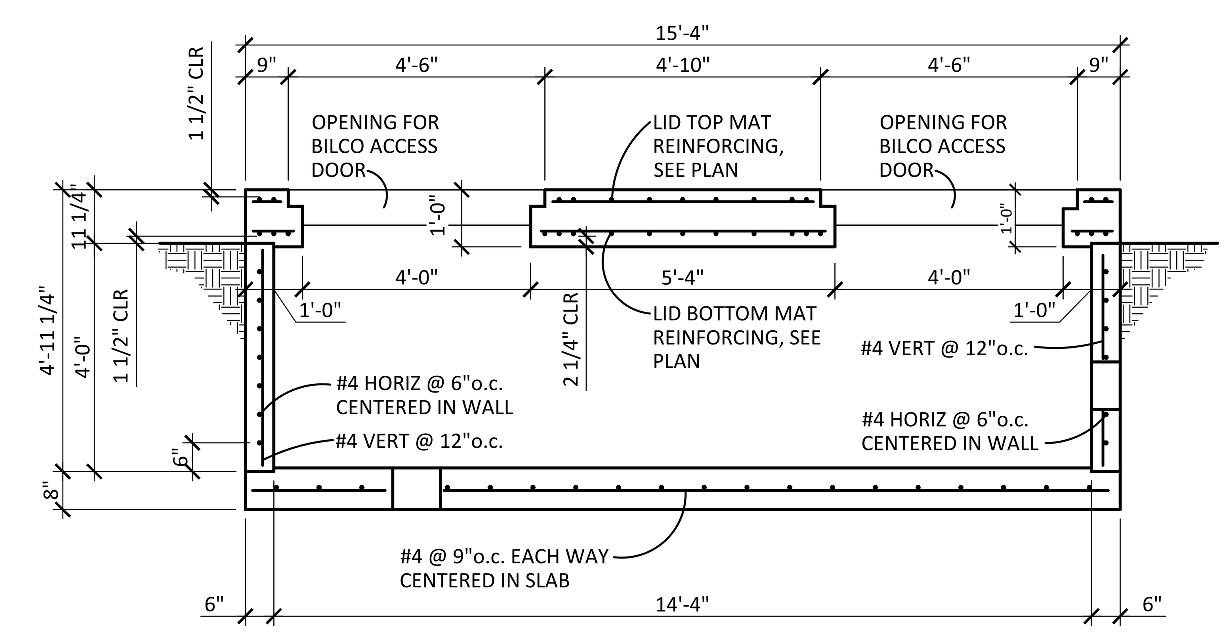

4 S2

3/8"=1'-0"

Penetration will be 12-inch diameter.
Side penetration will be 37-inches below grade form the crest of the pipe.

MacCORNACK ENGINEERING, LLC
1776 Montaño Rd. NW STE 24
Los Ranchos, New Mexico 87107

CLIENT: **ALL AMERICAN PRECAST, INC.**
3167 San Mateo NE Box 340
Albuquerque, N.M.

PROJECT: **PRECAST CONCRETE VAULTS**
BULK FUELS FACILITY
Kirtland Air Force Base

DRAWING: **VAULT PLANS, SECTIONS and GENERAL STRUCTURAL NOTES**

JOB NO:	DATE:	SHEET NO:
A47-015	08/30/17	S2

DONALD A. MacCORNACK NEW MEXICO 8638 REGISTERED PROFESSIONAL ENGINEER 8-30-17

BIDCO C-56 PREFORMED BUTYL MASTIC SEALANT

ECONOMICAL

RELIABLE

EASY-TO-INSTALL

1" Coils will be used.

NPC Bidco, Inc.
St. Joe Drive & Lewis Street • Park Hills, Missouri 63601
Tel: 800-442-0141 Fax: 573-431-1035

BIDCO C-56 PREFORMED BUTYL MASTIC JOINT SEALANT

AVAILABLE STANDARD SIZES*

COILS				
Width & Length	Cross Section	Pieces Per Carton	Linear Feet Per Carton	Pallet Size # Cartons/lbs.
.5" x 21.0'	oval	10	210	45 ctns./24 lbs.
.75" x 14.5'	.66 x .66	10	145	45 ctns./36 lbs.
1.0" x 14.5'	.88 x .88	8	116	45 ctns./50 lbs.
1.25" x 14.5'	.78 x 1.38	5	72.5	45 ctns./49 lbs.
1.5" x 10.0'	1 1/8 x 1.5	5	50	45 ctns./49 lbs.
2.0" x 10.0'	1.5 x 2 1/16	4	40	45 ctns./68 lbs.

STRIPS				
Width & Length	Cross Section	Pieces Per Carton	Linear Feet Per Carton	Pallet Size # Cartons/lbs.
.75" x 30"	.478 x 1.0	50	125	36 ctns./35 lbs.
1.0 x 30"	.58 x 1.6	35	87	36 ctns./37 lbs.
1.25 x 42"	.5 x 2.5	28	98	36 ctns./71 lbs.
1.5 x 42"	.75 x 2.5	20	70	36 ctns./75 lbs.
1.75 x 42"	.75 x 3.25	13	45	36 ctns./61 lbs.
2.0" x 42"	1.0 x 3.25	10	35	36 ctns./65 lbs.

* Custom sizes also available

NPC Bidco, Inc.
St. Joe Drive & Lewis Street
Park Hills, Missouri 63601
Tel: 800-442-0141 • Fax: 573-431-1035

ESTIMATING GUIDE — VERTICAL

COILS				STRIPS	
Inside Diameter of Pipe	Annular Space – 1/64" to 1/4"	Annular Space – 5/16" to 1/2"	Annular Space – 9/16" to 11/16"	Size of Pipe	Strip Size
42"	.75"	1.0"	1.25"	42"	1.25"
48"	.75"	1.0"	1.25"	48"	1.50"
54"	1.0"	1.0"	1.25"	54"	1.50"
60"	1.0"	1.25"	1.50"	60"	1.75"
66"	1.0"	1.25"	1.50"	66"	1.75"
72"	1.0"	1.25"	1.50"	72"	2.0"
84"	1.0"	1.25"	1.50"	84"	2.0"
96"	1.0"	1.25"	1.50"	96"	2.0"

ESTIMATING GUIDE — HORIZONTAL

COILS				STRIPS	
Inside Diameter of Pipe	Annular Space – 1/64" to 1/4"	Annular Space – 5/16" to 1/2"	Annular Space – 9/16" to 11/16"	Size of Pipe	Strip Size
12"	.50"	.75"	1.0"	12"	1.0"
15"	.50"	.75"	1.0"	15"	1.0"
18"	.50"	.75"	1.0"	18"	1.0"
21"	.50"	.75"	1.0"	21"	1.0"
24"	.75"	1.0"	1¼"	24"	1.25"
30"	.75"	1.0"	1¼"	30"	1.50"
33"	.75"	1.0"	1¼"	33"	1.50"
36"	.75"	1.0"	1¼"	36"	1.50"
39"	1.0"	1.25"	1½"	39"	1.50"
42"	1.0"	1.25"	1½"	42"	1.50"
45"	1.0"	1.25"	1½"	45"	1.50"
48"	1.0"	1.25"	1½"	48"	1.75"
54"	1.25"	1.50"	1½"	54"	1.75"
60"	1.25"	1.50"	2.0"	60"	1.75"
66"	1.25"	1.50"	2.0"	66"	1.75"
72"	1.25"	1.50"	2.0"	72"	2.0"
78"	1.25"	1.50"	2.0"	78"	2.0"
84"	1.50"	1.50"	2.0"	84"	2.0"
96"	1.50"	1.50"	2.0"	96"	2.0"
102"	1.50	1.50"	2.0"	102"	2.0"
108"	1.50"	1.50"	2.0"	108"	2.0"

BIDCO C-56 PREFORMED BUTYL MASTIC SEALANT

General Product Description:

NPC's Bidco C-56 Preformed Butyl Mastic Sealant is custom engineered to meet the most exacting standards of the precast concrete industry.

C-56 remains flexible and forms a permanent bond to a wide variety of substrates including concrete, metals and plastics. Adhesion and cohesion at the time of installation are excellent and actually improve after the joint has been formed and placed into service.

This sealant is designed not to shrink, oxidize or harden and has excellent resistance to temperature extremes, acid and alkaline environments. It is also non-toxic.

Bidco C-56 bonds instantly to joint surfaces and to itself. Always butt ends of preformed sealant together – never overlap. Leave protective release paper on sealant during application and remove only after structure is ready for coupling.

Product Features:

- Available in coil or strip form
- New, crush-proof packaging
- Non-stick, non-tear plastic backing

Primary Applications:

- Concrete Pipe
- Utility Vaults
- Septic Tanks
- Sanitary and Storm Sewer Manoles
- Box Culverts
- Burial Vaults
- Wet Wells
- Concrete Wall Panel Systems

NPC Bidco C-56 Meets or Exceeds:

- Federal Specifications SS-S-210 A "Sealing Compound, Preformed Plastic for Pipe Joints", Type 1, Rope Form
- AASHTO Designation M-198 75 I, Type B, Flexible Plastic Gasket (Bitumin)
- ASTM Designation C-990-91.

TYPICAL APPLICATIONS

Sealing Concrete Pipe & Culverts		Sealing Manholes, Septic Tanks & Vaults	
Single Coil			
Groove / Tongue — Open Joint	Groove / Tongue — Closed Joint	Tongue / Groove — Open Joint	Tongue / Groove — Closed Joint
Double Coil			
Groove / Tongue — Open Joint	Groove / Tongue — Closed Joint	Open Joint	Closed Joint
Single Coil used with O-Ring			
Groove / Tongue — Open Joint	Groove / Tongue — Closed Joint	Tongue / Groove — Open Joint	Tongue / Groove — Closed Joint

TECHNICAL DATA

CHEMICAL COMPOSITION	SPECIFICATION	REQUIREMENT	C-56
Content of Hydrocarbon — % by weight	ASTM D4-86	50 - 70	56.0
Inert Mineral Filler — % by weight	AASHTO T III	30 - 50	44.0
Volitile Matter — % by weight	ASTM D-6	2.0 max.	below 1
PHYSICAL PROPERTIES			
Specific Gravity — 77° F	ASTM D-71	1.2 - 1.35	1.23
Ductility — 77° F	ASTM D-113	5.0 min.	10.0 +
Softening Point — 77° F	ASTM D-36	320 min.	380
Penetration — 77° F	ASTM D-217	50 - 210	102
Accelerated Aging (mechanical oven for 4 hours @ 212° F)			Maintained 99+% of Solids (Flexibility not affected)
Elongation Initial — 77° F			300% min.
Two Weeks — Total Water Immersion			300% min.
Flow Resistance (1" wide overhead joint exposed to 135° F for 7 days)			No Flow
Storage Life			Indefinite
Application Temperature Range			0 to 125° F
Service Temperature Range			-20 to 200° F
CHEMICAL RESISTANCE (TOTAL IMMERSION – 30 DAYS)			
5% Sulfuric Acid			No Visible Deterioration
5% Hydrochloric Acid			No Visible Deterioration
5% Potassium Hydroxide			No Visible Deterioration
Saturated Hydrogen Sulfide Solution			No Visible Deterioration

NPC Bidco, Inc.
St. Joe Drive & Lewis Street • Park Hills, Missouri 63601
Tel: 800-442-0141 Fax: 573-431-1035

DEPARTMENT OF THE ARMY
ALBUQUERQUE DISTRICT, CORPS OF ENGINEERS
ALBUQERQUE DISTRICT OFFICE
4101 JEFFERSON PLAZA NE
ALBUQUERQUE, NM 87109

SUBMITTAL REVIEW VERIFICATION SHEET

PROJECT TITLE: Kirtland BFF Mid-Plume Pump and Treat System Expansion
CONTRACT NUMBER: W912DR-12-D-0006 DM01
DATE RECEIVED: 09-13-2017
DATE REVIEWED: 09-14-2017

DESCRIPTION OF ITEMS REVIEWED:

1. Precast Vault Concrete Mix Design

	X
NO EXCEPTIONS TAKEN.	
EXCEPTIONS AS NOTED ON DRAWINGS AND/OR ATTACHED SHEETS(S). RESUBMISSION NOT REQUIRED.	
EXCEPTIONS AS NOTED ON DRAWINGS AND/OR ATTACHED SHEETS(S). RESUBMISSION REQUIRED.	
RECEIPT ACKKNOWLEDGED.	

Notes:

NOTE: ITEMS REVIEWED AS TO GENERAL LAYOUT ONLY. DIMENSIONS AND QUANTITIES NOT CHECKED. REVIEW DOES NOT RELIEVE CONTRACTOR OF RESPONSIBILITIES FOR ANY ERRORS WHICH MAY EXIST AS CONTRACTOR SHALL BE RESPONSIBLE FOR DIMENSIONS AND DESIGN OF ADEQUATE CORRECTIONS, DETAILS AND SATISFACTORY CONSTRUCTION OF WORK.

SIGNATURE SANCHEZ.AMY.ELIZABETH.1454434338 Digitally signed by SANCHEZ.AMY.ELIZABETH.1454434338 DN: c=US, o=U.S. Government, ou=DoD, ou=PKI, ou=USA, cn=SANCHEZ.AMY.ELIZABETH.1454434338 Date: 2017.09.14 12:22:01 -06'00' **DATE** 9/14/2017

EA Engineering, Science, and Technology, Inc., PBC

Submittal Review Sheet 1

Project Name: **Kirtland BFF Mid-Plume Pump and Treat System Expansion**				Date Received: **9/12/17**		
Project Owner: **Kirtland Air Force Base**				Checked By: **Tyler Curley**		
Contractor: **RMCI, Inc.**	Engineer: **EA Engineering, Science and Technology, Inc., PBC.**			Log Page: **NA**		
Address: **6211 Chappell Rd NE, Albuquerque, NM 87113**	Address: **320 Gold Ave. SW, Suite 1300 Albuquerque, NM 87102**			EA No.: 62599DM01		
				Spec. Section: **NA**		
				Drawing/Detail No.:		
ATTN: Phillip Johnson	ATTN: **Devon Jercinovic**			1st Sub		Re-Sub
Date Transmitted: **09/13/2017**	Prev. Transmittal Date:					

Item No.	No. Copies	Description	Manufacturer	Mfg/Vendor Dwg or Detail	Action Taken*
1	1	Precast Vault Concrete Mix Design	All American Precast, INC		A

The Action Designated Above is in Accordance with the Following Legend:

A – Furnish as Submitted
B – Furnish as Noted
C – Revise and Re-submit
1. Not enough information for review.
2. No reproducible submitted.
3. Copies illegible.
4. Not enough copies submitted.
5. Wrong sequence number.
6. Wrong resubmittal number.
7. Wrong Spec. Section.
8. Wrong form used.
9. See Comments.

D – Rejected
E – Engineer's Review not Required
1. Submittal not required.
2. Supplemental Information. Submittal retained for Information purposes only.
3. Information reviewed and approved on prior submittal.
4. See Comments.

Review is for general compliance with Contract Documents. No responsibility is assumed for correctness of dimensions or detail. Contractor is required to specify deviations from contract requirements. Lack of exceptions noted by Engineer does not waive Contractor's obligation to comply with Drawings and Specifications.

Comments:
Items reviewed and confirmed to meet requirements
Issues in Bold

Concrete mix design conforms to the specs.

By: _____ Date: 9/13/17

Distribution: [1] Contractor [1] Engineer [1] Owner

Precast Vault Concrete Mix Design

DUKE CITY REDI- MIX, LLC.

P.O. BOX 250
MORIARTY, NM 87035
(505) 877-5777
FAX: (505) 452-0806

CONCRETE MIX DESIGN

MIX CODE:	**453423 AEA**	**MIX DESCRIPTION:**	**4500 P.S.I. 3/4" AEA**
DESIGN SLUMP:	**4**	**WATER/CEMENT RATIO:**	**0.37716042**

MATERIAL		WEIGHT(lbs)	SPECIFIC GRAVITY	VOLUME(cuft)
Southway Los Lunas 3/4" Course Aggregate		1470	2.74	8.60
Southway Los Lunas 3/8" Course Aggregate		432	2.74	2.53
Southway Hwy 263 Concrete Sand		1091	2.59	6.75
Holcim Type I-II LA Cement		530	3.15	2.70
Four Corners Class F Flyash		137	2.00	1.10
Water (gals)	30.2	251.566	1.00	4.03
Sika 161 WR		45	-	
Sika Air		8	-	1.35
TOTALS:		**3911.566**		**27.06**

Miles Shiver

DUKE CITY REDI-MIX
Managing Partner

Product Description	**4500 3/4 AEA**
Product code	**453423AEA**
Plant	**Broadway**
Date Range	

Month To Date Statistics	Concrete Temp Deg F	Slump Inches	Ambient Temp Deg F	Unit Weight PCF	Testing Facility Cylinder Breaks 7 day	14 day	28 Avg	28 day	28 day	28 day	56 day		
High	83	7	8	149	5420	5140	6985	7000	6970	6560			
Low	57	3	2	137	3160	4160	4517	4470	4380	4470			
Standard Deviation	4.5	0.8	1.2	2.4	529.7	434.6	604.0	619.5	610.2	480.4			
Average	70	5	5	143	4108	4528	5566	5560	5556	5417			
Specifications													

Detail of test results

Date	Truck Number	Ticket Number	Concrete Temp Deg F	Slump Inches	Ambient Temp Deg F	Unit Weight PCF	Testing Facility Cylinder Breaks 7 day	14 day	28 Avg	28 day	28 day	28 day	56 day	Location	Test Facility
10/6/2014	134	215851	70	5.50	1.5		4350		**5973**	5900	6000	6020		SW Pre K	Amec
10/6/2014	140	153006	83	3.50	3.8	148.5	4250		**6210**	6080	6340			SWRP	Vinyard
10/8/2014	157	216027	76	4.00	5.3	142.1	4360		**5853**	5760	5920	5880		SW Pre K	Amec
10/8/2014	158	153705	71	4.50	3.6	147.4	4640		**6600**	6700	6500			SWRP	Vinyard
10/11/2014	147	153920	65	5.00	3.2	145.8	5020		**6735**	6810	6660			SWRP	Vinyard
10/15/2014	140	216651	70	6.00	2.5	143.8	4030		**5413**	5200	5560	5480		SW Pre K	Amec
10/17/2014	118	216792	71	6.00	6.3	139.7	3580		**4727**	4770	4710	4700		SW Pre K	Amec
10/17/2014	146	216808	70	5.50	4.1	143.3	3750		**5067**	5320	4930	4950		SW Pre K	Amec
10/17/2014	154	216780	74	5.50	3.0	145.0	4060		**5593**	5580	5610	5590		SW Pre K	Amec
10/24/2014	134	217320	70	6.00	4.7	142.3	3500		**4807**	4720	4840	4860		SW Pre K	Amec
10/28/2014	117	217584	68	5.00	4.9	143.5	3740		**5040**	5140	4920	5060		SW Pre K	Amec
10/30/2014	134	217709	70	5.00	5.5	143.1	4380		**5710**	5830	5620	5680		SW Pre K	Amec
11/5/2014	143	218127	69	4.50	4.0	142.3	4180		**5590**	5570	5700	5500		SW Pre K	Amec
11/5/2014	158	218082	68	5.00	5.9	141.0	4270		**5613**	5560	5500	5780		SW Pre K	Amec
11/6/2014	150	218247	78	5.00	5.1	142.8	4380		**5810**	5740	5740	5950		SW Pre K	Amec
11/7/2014	118	218343	78	5.50	4.7	143.5	4300		**5637**	5570	5680	5660		SW Pre K	Amec
11/11/2014	154	218488	73	5.00	6.3	140.3	3320		**4640**	4640	4690	4590		SW Pre K	Amec
11/13/2014	158	218708	66	6.00	4.9	141.7	3160		**4517**	4560	4520	4470		SW Pre K	Amec
11/13/2014	157	218670	64	4.50	4.0	144.8	4490		**6050**	6050	6090	6010		SW Pre K	Amec
11/14/2014	147	155745	72	4.25	5.5	145.3	4380		**5705**	5650	5760			SWRP	Vinyard
11/26/2014	104	156354	72	4.00	5.0	145.7	4710		**6420**	6430	6410			SWRP	Vinyard
12/5/2014	107	156703	73	4.00	4.6	145.6	4760		**6535**	6530	6540			SWRP	Vinyard
12/6/2014	117	156745	67	4.60	4.0	146.0	5090		**6555**	6440	6670			SWRP	Vinyard
12/9/2014	149	156833	69	6.75	4.5	140.6	3340		**4593**	4540	4590	4650		Bargain Square	Geo
12/9/2014	103	156843	65	2.50	4.6	145.9	4500		**6190**	6160	6220			SWRP	Vinyard
12/9/2014	107	156866	69	4.00	5.0	145.2	4650		**6460**	6590	6330			SWRP	Vinyard
12/10/2014	155	220359	69	4.50	3.3	145.0	4340		**6060**	6010	6060	6110		SW Pre K	Amec
12/12/2014	146	157107	70	4.50	3.3	146.3	4770		**6760**	6880	6640			SWRP	Vinyard
12/16/2014	156	220782	70	4.50	5.0	141.9	4070		**5650**	5570	5690	5690		SW Pre K	Amec
12/19/2014	134	157434	70	5.00	5.5	140.4	3350		**4865**	4910	4820			SWRP	Vinyard
12/19/2014	140	221180	72	4.00	3.3	144.8	4100		**5740**	5730	5750	5740		SW Pre K	Amec
12/23/2014	143	157601	64	4.50	5.1	138.9	3380		**6210**	6180	6250	6200		SW Pre K	Amec
12/31/2014	157	221694	57	5.00	4.4	143.3	3850		**5340**	5280	5290	5450		SW Pre K	Amec
1/5/2015	104	221764	66	5.50	6.7	139.7	3650		**5183**	5270	5100	5180		SW Pre K	Amec
1/6/2015	153	221864	69	4.00	4.8	143.5	3940		**5567**	5440	5660	5600		SW Pre K	Amec
1/7/2015	143	221984	70	5.00	5.4	142.0	3580		**5283**	5260	5250	5340		SW Pre K	Amec
1/8/2015	102	158135	71	4.00	5.5	145.6	3380	4160	**5380**	5390	5370			SWRP	Vinyard
1/9/2015	107	222184	70	5.50	5.0	142.6	3440		**5030**	5050	5020	5020		SW Pre K	Amec

1/9/2015	159	158176	68	4.25	4.4	139.5	4360	4520	**5720**	5670	5770			SWRP	Vinyard
1/14/2015	155	158325	66	4.50	6.6	142.3	3360	4290	**5145**	5120	5170			SWRP	Vinyard
1/15/2015	158	222469	67	5.00	4.5	142.4	3760		**5460**	5450	5520	5410		SW Pre K	Amec
1/16/2015	158	158475	68	4.50	6.1	144.7	4210	5140	**6985**	7000	6970			SWRP	Vinyard
1/23/2015	103	223095	67	4.50	6.0	140.9	3700		**5307**	5300	5340	5280		SW Pre K	Amec
1/26/2015	151	223234	69	5.00	6.5	142.4	3600		**4903**	4890	4930	4890		SW Pre K	Amec
1/28/2015	118	223427	77	5.00	6.0	143.1	3470		**5293**	5340	5270	5270		SW Pre K	Amec
2/2/2015	104	223788	70	5.50	6.3	140.5	3500		**4903**	4990	4870	4850		SW Pre K	Amec
2/9/2015	159	224358	68	5.00	7.1	138.4	3350		**4750**	4500	4380	5370		SW Pre K	Amec
2/19/2015	157	225173	70	6.00	5.0	142.1	4000		**5377**	5510	5300	5320		SW Pre K	Amec
3/5/2015	146	226117	70	5.00	4.0	143.9	4380		**5720**	5660	5760	5740		SW Pre K	Amec
3/6/2015	157	226225	75	5.00	4.5	143.8	4150		**5657**	5670	5590	5710		SW Pre K	Amec
3/6/2015	152	226242	73	3.00	4.0	146.5	5070		**6610**	6680	6590	6560		SW Pre K	Amec
3/12/2015	143	226668	70	5.50	4.0	143.9	4050		**5610**	5590	5600	5640		SW Pre K	Amec
3/23/2015	159	509379	68	4.50	7.5	137.1	3250		**4525**	4470	4580		5030	SW Pre K	Amec
3/24/2015	103	227726	70	3.00	5.0	146.7	4090		**5440**	5400	5480			SWRP	Vinyard
4/8/2015	143	228945	69	5.00	6.8	144.3	4410		**5155**	5080	5230			SWRP	Vinyard
4/9/2015	133	229084	65	4.00	5.5	144.9	5060		**6395**	6410	6380			SWRP	Vinyard
4/14/2015	133	229520	67	5.00	3.5	144.7	4620		**6007**	5920	5970	6130		SW Pre K	Amec
4/17/2015	159	229887	65	5.50	5.1	141.6	4160		**5230**	5230	5170	5290		SW Pre K	Amec
4/20/2015	157	230047	75	5.50	3.5	143.2	4400		**5470**	5430	5540	5440		SW Pre K	Amec
4/23/2015	153	230269	72	4.50	6.5	139.2	4010		**4980**	4900	4930	5110		SW Pre K	Amec
4/24/2015	159	230495	70	5.00	6.0	141.0	3690		**4887**	4800	4910	4950		SW Pre K	Amec
4/29/2015	140	230798	70	5.50	4.9	141.4	3650		**4803**	4810	4890	4710		SW Pre K	Amec
5/1/2015	108	231094	82	4.00	4.5	143.9	4200		**5340**	5470	5210			SWRP	Vinyard
12/21/2015	165	16549997	66	5.50	4.7	143.8	4530		**6160**	6240	6080			Santa Ana Pueblo	Western
12/21/2015	165	49987	59	5.00	6.1	145.6	4460		**5765**	5810	5720			Santa Ana Pueblo	Western
1/15/2016	165	50088	66	6.00	3.5	145.2	5420		**5345**	5470	5220			Santa Ana Pueblo	Western
1/15/2016	145	50080	61	7.25	5.5	141.4	4100		**4975**	4840	5110			Santa Ana Pueblo	Western
4/29/2016	149	50962	65	6	4.7	139.6	5040		**5445**	5620	5270			Santa Ana Pueblo	Western
4/14/2016	157	179602	73	5	5.8	142.7	4380		**5563**	5530	5650	5510		KAFB Repair KUN	Amec

Concrete Mix Analysis

Project:	**AAPI-NM Westside Interceptor**	**Project No:**	
Client:	**All American Precast**	**Lab No.:**	
Mix Description:	**4500 AEA 3/4"**		
		Analysis Date:	10/03/16
Mix Code:	**453423 AEA**	**Analysis By:**	Miles

Data Source:	Duke City Database
Test Date Range:	10/06/14 to 04/14/16
Number of Tests:	75

	Slump, in. (1)	Air Content, % (1)	28 Day Compressive Strength, psi
Average Value	**5.00**	**5.00**	**5566**
Standard Deviation	0.80	1.20	604
Upper Specification Limit	8	7.5	
Lower Specification Limit	1	4.5	4500
Upper Conformance Factor	3.75	2.08	(2)
Lower Conformance Factor	(2)	0.42	1.76
Upper (Limit) Probability of Nonconformance			0.00
Lower (Limit) Probability of Nonconformance	0.00		5.82
Probability of Conformance to Specifications, %	**100**	**100**	**94**

Number of Tests Modification Factor (k):	1.02
f'c + 1.34ks	5326
f'c + 2.33ks - 500	5435
Required f'cr	**5435**
Mix Design Average > f'cr:	**Yes**

Notes:

(1) Statistical data for Slump and Air Content are for information only since Out-of-Specification test results are grounds for immediate rejection of the concrete.

(2) It is impossible to exceed the limit. Hence, Noncompliance is 0.

Alkali-Silica Reaction Analysis Report

Client:	**Duke City Redi Mix**	**Date Reported:**	6/30/2016 ☐ Revised
Address:	**7705 Broadway SE**	**Project:**	Various
	Albuquerque, NM 87105	**Project #:**	
		Aggregate Source(s):	Orona Sand 35%/Southvalley Rock 65%
		Cement Source:	GCC Tijeras, I/II
Test requested by:	Miles Shiver	**Admixture Source:**	SRM 4 Corners Cl. F fly ash
Samples Received:	6/13/2016	**Admixture Percentage**	25% *by wt of cement or*
Laboratory #:	443-16		20% *by wt of cementitious*

Standard Test Method for Determining the Potential Alkali Reactivity of Combinations of Cementitious Materials and Aggregate (Accelerated Mortar Bar Method) ASTM C1567-11

								Specs
Batch date:	6/13/2016	Reading	Bar A	Bar B	Bar C	Calibration	Avg Bar	% expansion	
Test Date:	6/14/16	Initial	0.2986	0.3066	0.3164	0.0704	0.3072		
	6/15/16	Zero	0.3039	0.3126	0.3225	0.0710	0.3130		
	6/20/16	5	0.3035	0.3123	0.3227	0.0706	0.3128		
			0.000%	0.001%	0.006%			**0.0023%**	
	6/23/16	8	0.3041	0.3130	0.3230	0.0698	0.3134		
			0.014%	0.016%	0.017%			**0.0157%**	
	6/27/16	12	0.3046	0.3134	0.3235	0.0701	0.3138		
			0.016%	0.017%	0.019%			**0.0173%**	
	6/29/16	14	0.3052	0.3141	0.3242	0.0703	0.3145		
			0.020%	0.022%	0.024%			**0.02%**	**< 0.10%**

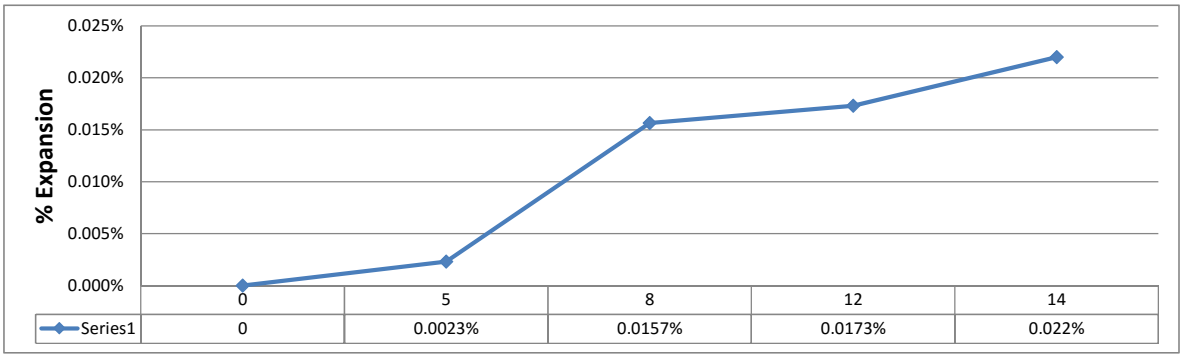

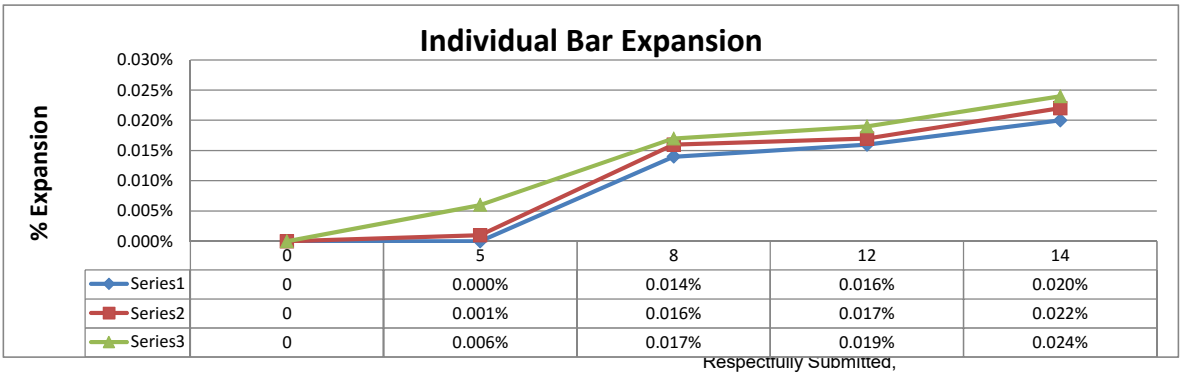

Respectfully Submitted,

L. Marquez

Lea Ann Marquez, PE

Concrete, Aggregate and Asphalt Testing, LLC
414 Bibb Industrial Dr.
P.O.Box 1228
Las Vegas, NM 87701
505-718-3030

Material Certification Report

Material: Portland Cement
Type: I-II Low Alkali
Test Period: 01-August-2016 - 31-August-2016

Certification

This Holcim cement meets the specifications of ASTM C150 for Type I-II and complies with AASHTO M85 specifications for Type I cement.

General Information

Supplier:	Holcim (US) Inc	Source Location:	Portland Plant
Address:	3500 Highway 120 Florence, CO 81226		3500 Highway 120 Florence, CO 81226
Contact:	Kevin Tate / (719)288-1431		
Date Issued:	7-September-2016		

The following information is based on average test data during the test period.
The data is typical of cement shipped by Holcim; individual shipments may vary.

Tests Data on ASTM Standard Requirements

Chemical			Physical		
Item	**Limit [1]**	**Result**	**Item**	**Limit [1]**	**Result**
SiO_2 (%)	-	20.1	Air Content (%)	12 max	8
Al_2O_3 (%)	6 max	4.6	Blaine Fineness (m^2/kg)	260-430	414
Fe_2O_3 (%)	6 max	3.4			
CaO (%)	-	63.3	Autoclave Expansion (%) (C151)	0.80 max	0.01
MgO (%)	6 max	1.4	Compressive Strength Mpa (psi)		
SO_3 [2]	3 max	3.2			
Loss on Ignition (%)	3.5 max	2.7	1 day	-	18.9 (2737)
Insoluble Residue (%)	1.5 max	0.59	3 day	10 (1450.0) min	29.5 (4277)
CO_2 (%)	-	1.5	7 day	17 (2465.0) min	35.9 (5202)
Limestone (%)	5 max	4.0	28 day	28 (4060) min	45.3 (6567)
$CaCO_3$ in Limestone (%)	70 min	82	Initial Vicat minutes	45-375	113
Inorganic Processing Addition (%)	5 max	0.0			
Potential Phase Compositions [3]:			Mortar Bar Expansion (%) (C1038)	-	0.01
C_3S (%) - ADJ	-	55.1			
C_2S (%) - ADJ	-	15.2			
C_3A (%) - ADJ	8 max	6.2			
$C_3S + 4.75C_3A$ (%)	-	84.5			

Test Data on ASTM Optional Requirements

Chemical			Physical		
Item	**Limit [1]**	**Result**	**Item**	**Limit [1]**	**Result**
Equivalent Alkalis (%)	0.60 max	0.57	Heat of Hydration kJ/kg (cal/g) 7 Days [4]	-	360 (86)

Notes (*1-9)

1 - Dashes in the Limit / Result columns mean Not Applicable.

2 - It is permissible to exceed the specification limit provided that ASTM C1038 Mortar Bar Expansion does not exceed 0.020% at 14 days.

3 - Adjusted per Annex A1.6 of ASTM C150 and AASHTO M85.

4 - Test results represent the most recent value and is provided for information only. Analysis of Heat of Hydration tested by CTL Group Skokie, IL.

Salt River Materials Group
100% AMERICAN™

Duke City Redi Mix
Attn: Miles Shiver
PO BOX 250
Moriarity, NM 87035

Product: ASTM C618 Class F, Four Corners Fly Ash
AASHTO M295

POZZOLAN TEST REPORT

8-24-16 Ctl#: 121916

Lot: 6428	**Results**	**Specifications**
Chemical Analysis (C311 / C114 / D4326)		
Silicon Dioxide, SiO_2	62.05 %	---
Aluminum Oxide, Al_2O_3	23.45 %	---
Ferric Oxide, Fe_2O_3	4.36 %	---
$SiO_2+Al_2O_3+Fe_2O_3$	89.86 %	70.00 Min
Calcium Oxide, CaO	2.30 %	---
Magnesium Oxide, MgO	1.21 %	---
Sulfur Trioxide, SO_3	0.33 %	5.00 Max
Moisture Content	0.05 %	3.00 Max
Loss on Ignition	0.33 %	6.00 Max
Sodium Oxide, Na_2O	1.35 %	---
Potassium Oxide, K_2O	1.48 %	---
Total Alkalis (%Na_2O + 0.658% K_2O)	2.32 %	---
Available Alkalis as Na_2O Equivalent	0.71 %	---
Physical Analysis		
Fineness, amount retained on #325 sieve, % (C430)	24.70	34.00 Max
variation, points from average	0.66	5.00 Max
Density, g/cm³ (C188)	1.94	---
Variation from average, %	0.02	5.00 Max
Strength Activity Index with Portland Cement (C311 / C109)		
at 7 days, % of cement control	79.34	---
at 28 days, % of cement control	82.69	75.00 Min
Water Requirement (C311)		
% of cement control	95.87	105.00 Max
Soundness, autoclave expansion (C311 / C151)		
or contraction, %	-0.03	0.80 Max

All tests have been made in strict accordance with the current standards of the American Society for Testing and Materials covering the type of material specified.

Lee Gorby, Quality Assurance Manager
30 SEP 2016

AAP® AASHTO R18

PHOENIXCEMENT

Clarkdale Cement Plant
601 N. Cement Plant Rd
Clarkdale, AZ 86324

19th Ave. Terminal
1802 W. Lower Buckeye Rd
Phoenix, AZ 85007

Lower Buckeye Terminal
1941 W. Lower Buckeye Rd
Phoenix, AZ 85007

21st Ave. Terminal
1325 N. 21st Ave.
Phoenix, AZ 85009

54th Ave. Terminal
5402 W Buchanan St.
Phoenix, AZ 85043

Dobson Storage
9595 E. McKellips Rd.
Scottsdale, AZ 85250

Cholla Fly Ash Plant
4801 Frontage Rd.
Joseph City, AZ 86032

Four Corners Fly Ash Plant
End of County Road 6675
Fruitland, NM 87416

San Juan Fly Ash Plant
End of County Road 6800
Waterflow, NM 87421

Escalante Fly Ash Plant
County Road 19
Prewitt, NM 87405

Gallup Transfer Terminal
900 N 9th St.
Gallup, NM 87301

San Diego Terminal
920 Bay Marina Dr.
National City, CA 91950

Fontana Budway Terminal
13600 Napa St.
Fontana, Ca 92335

Bakersfield Terminal
32535 7th Standard Rd.
Bakersfield, CA 93314

Stockton Terminal
1300 N. Gertrude Ave.
Stockton, CA 95215

Sacramento Terminal
4520 50th St.
McClellan Park, CA 95652

Panaca Pozzolan Plant
333 Hansen St.
Panaca, NV 89042

Denver Terminal
220 East 54th Avenue
Denver, CO 80216

Aggregate Test Report

Project:	Supplier Information	Report Date:	11/13/15
Client:	**Duke City Redi Mix**	Sample Date:	11/4/15
Address:	**7705 Broadway SE**	Sampled By:	Jacob
	Albuquerque, NM 87105	Material Tested:	7/8" Concrete Aggregate
	Espanola, NM 87532	Date Tested:	11/5/15-011/13/15
		Tested By:	Mary/Steven
Sample received:	11/4/2015	Sample Location:	Stockpile
Laboratory #:	ABQ LL50-15	Sample Source:	South Valley pit

Sieve Analysis

C-117 & C136/T-11 & T-27 **ASTM C33 #67**

Sieve Size	% Passing	Specs
6" (150mm)	From Supplier QC dated 1-5-15 through 11-9-15	
3" (75mm)		
2" (50mm)		
1.5" (37.5mm)		
1" (25mm)	100	**100**
3/4" (19mm)	97	**90-100**
1/2" (12.5mm)	50	
3/8" (9mm)	26	**20-55**
#4 (4.75mm)	4	**0-10**
#8 (2.36mm)	2	**0-5**
#10 (2mm)		
#16 (1.18mm)	2	
#30 (0.6mm)	2	
#40 (0.425mm)		
#50 (0.3mm)	2	
#80 (0.18mm)		
#100 (0.15mm)	2	
#200 (0.075mm)	1.1	**0-1.5**
Fineness Modulus		

Test Results

Standard		Physical Properties	Results	ASTM Specs
C-127	Coarse	Bulk Specific Gravity	2.719	
	Specific	Bulk Specific Gravity, SSD	2.778	
T-85	Gravity &	Apparent Specific Gravity	2.889	
	Absorption	Absorption, %	2.1	
C-131	L.A.	LA Wear, %	35.5	**< 50**
T-96	Abrasion	Grading	B	
C-142	Clay/Friable	Coarse Aggregate, %	0.1	**< 2.0**
T-112	Particles			
C-88	Soundness	Coarse Soundness Loss, %	0.92	**< 18**
	5 cycles			
T-104	$MgSO_4$	Fine Soundness Loss, %		
D5821	Fractured	1 face	100	
	Faces	2 faces	100	

Reports to: fax/email
Miles Shiver Dukecityredimix@aol.com

Respectfully Submitted,

L. Marquez

Lea Ann Marquez, PE

Concrete, Aggregate and Asphalt Testing, LLC ABQ Lab
9430 San Mateo NE Unit H
Albuquerque, NM 87113
505-362-6422

Aggregate Test Report

Project:	Supplier Information	Report Date:	11/13/15
Client:	**Duke City Redi Mix**	Sample Date:	11/4/15
Address:	**7705 Broadway SE**	Sampled By:	Jacob
	Albuquerque, NM 87105	Material Tested:	3/8" Concrete Aggregate
	Espanola, NM 87532	Date Tested:	11/5/15-011/13/15
		Tested By:	Mary/Steven
Sample received:	11/4/2015	Sample Location:	Stockpile
Laboratory #:	ABQ LL50-15	Sample Source:	South Valley Pit

Sieve Analysis

C-117 & C136/T-11 & T-27 **ASTM C33 #8**

Sieve Size	% Passing	Specs
6" (150mm)	From Supplier QC dated 1-5-15 through 11-9-15	
3" (75mm)		
2" (50mm)		
1.5" (37.5mm)		
1" (25mm)		
3/4" (19mm)		
1/2" (12.5mm)	100	**100**
3/8" (9mm)	93	**85-100**
#4 (4.75mm)	27	**10-30**
#8 (2.36mm)	6	**0-10**
#10 (2mm)		
#16 (1.18mm)	5	**0-5**
#30 (0.6mm)	3	
#40 (0.425mm)		
#50 (0.3mm)	3	
#80 (0.18mm)		
#100 (0.15mm)	3	
#200 (0.075mm)	2.1	**0-2**
Fineness Modulus		

Test Results

ASTM C33

Standard		Physical Properties	Results	Specs
C-127	Coarse	Bulk Specific Gravity	2.724	
	Specific	Bulk Specific Gravity, SSD	2.79	
T-85	Gravity &	Apparent Specific Gravity	2.914	
	Absorption	Absorption, %	2.1	
C-142	Clay/Friable	Coarse Aggregate, %	0.1	**< 2.0**
T-112	Particles			
D5821	Fractured	1 face	100	
	Faces	2 faces	100	

Reports to: fax/email
Miles Shiver Dukecityredimix@aol.com

Respectfully Submitted,

L. Marquez
Lea Ann Marquez, PE

Concrete, Aggregate and Asphalt Testing, LLC ABQ Lab
9430 San Mateo NE Unit H
Albuquerque, NM 87113
505-362-6422

Aggregate Test Report

Project:	Supplier Information	Report Date:	11/13/15
Client:	**Duke City Redi Mix**	Sample Date:	11/4/15
Address:	**7705 Broadway SE**	Sampled By:	Jacopb
	Albuquerque, NM 87105	Material Tested:	Concrete Sand
	Espanola, NM 87532	Date Tested:	11/5/15-011/13/15
		Tested By:	Mary/Steven
Sample received:	11/4/2015	Sample Location:	Stockpile
Laboratory #:	ABQ LL50-15	Sample Source:	Orona Sand

Sieve Analysis

C-117 & C136/T-11 & T-27 **ASTM C33**

Sieve Size	% Passing	Specs
6" (150mm)	From Supplier QC dated 1-5-15 through 11-9-15	
3" (75mm)		
2" (50mm)		
1.5" (37.5mm)		
1" (25mm)		
3/4" (19mm)		
1/2" (12.5mm)		
3/8" (9mm)	100	**100**
#4 (4.75mm)	96	**95-100**
#8 (2.36mm)	88	**80-100**
#10 (2mm)		
#16 (1.18mm)	81	**50-85**
#30 (0.6mm)	65	**25-60**
#40 (0.425mm)		
#50 (0.3mm)	25	**5-30**
#80 (0.18mm)		
#100 (0.15mm)	2	**0-10**
#200 (0.075mm)	1.1	**0-3**
Fineness Modulus	2.44	

Test Results

ASTM C33

Standard		Physical Properties	Results	Specs
C-128	Fine	Bulk Specific Gravity	2.562	
	Specific	Bulk Specific Gravity, SSD	2.592	
T-84	Gravity &	Apparent Specific Gravity	2.641	
	Absorption	Absorption, %	1.1	
D2419	Sand Equiv.	Sand Equivalent, %	80	
T176				
C-142	Clay/Friable	Fine Aggregate, %	0.2	**< 3.0**
T-112	Particles			
C40	Organic	Organic Impurities	N/I	
	Impurities			
C-88	Soundness	Coarse Soundness Loss, %		
	5 cycles			
T-104	$MgSO_4$	Fine Soundness Loss, %	5.6	**< 15**

ASTM C33-13 6.3 Note 3 "Fine aggregate that conforms to the grading requirements of a specification, prepared by another organization such as a state transportation agency, which is in general use in the area, should be considered as having a satisfactory service record with regard to those concrete properties affected by grading."
The concrete sand is currently in use for NMDOT projects under NMDOT Lab #'s 15-00281cg, 00282cg, 00283cg, 00271cg and several others.

Reports to: fax/email
Miles Shiver Dukecityredimix@aol.com

Respectfully Submitted,

L. Marquez
Lea Ann Marquez, PE

Concrete, Aggregate and Asphalt Testing, LLC ABQ Lab
9430 San Mateo NE Unit H
Albuquerque, NM 87113
505-362-6422

Product Data Sheet
Edition 10.2005
Identification no. 161
Plastocrete 161

Construction

Plastocrete® 161

Water Reducing Admixture

Description

Plastocrete 161 is a lignin polymer-type water-reducing admixture.

Plastocrete 161 meets the requirements of ASTM C-494 Types A, B and D.

Applications

Plastocrete 161 is recommended for use in all applications where high quality concrete with superior workability is required.

Advantages

Plastocrete 161 water reducing admixture provides an economical and highly effective means of reducing the amount of mixing water required to produce concrete of a certain slump by acting as a dispersant for the cement particles in the mix.

Through this dispersing action more of the surface area of the cement particles is available for early hydration. The more cement particles hydrated by contact with the mixing water, the greater the compressive strength of the concrete.

Plastocrete 161 is formulated as a Type A water reducer to allow up to 10% water reduction and maximize the benefits of increased hydration in both the hardened and plastic states.

- Reduced water content required to achieve desired slump, increases compressive and flexural strengths and allows the use of more economical mixes.
- Improved paste quality makes concrete easier to pump and finish.
- Consistent normal setting times throughout the recommended dosage.
- Lower water cement ratios provide decreased permeability and increased durability.
- Plastocrete 161 does not contain intentionally added chlorides and will not initiate nor promote the corrosion of steel in the concrete.

How to Use

Dosage

Dosage rates will vary depending on the material used, ambient conditions and the requirements of a specific project.

For general concreting applications, Sika recommends a dosage rate between 2-4 fl.oz./100 lbs. (130-260 ml/100 kg) of cementitious materials for normal setting characteristics. Dosage rates of 4-6 fl.oz./100 lbs. (260-390 ml/100 kg) of cementitious materials are recommended for applications where higher water reduction is needed as well as extended workability and prolonged setting times.

Dosage rates outside the recommended range may be used where specialized materials such as microsilica are specified, extreme ambient conditions are encountered or unusual project conditions require special consideration. In this case please contact your local regional Sika office or Sika technical service department at 1-800-933-7452 for further information.

Construction

Mixing

Plastocrete 161 is added at the concrete plant. Measure required quantity manually or by automated dispenser. Add into the water line at the batch plant or to the mixer at the end of the batching cycle.

Combination with other Admixtures: Plastocrete 161 works effectively as a single admixture or in combination with other admixtures in the Sika System. When air entrained concrete is specified, Sika recommends the use of Sika air entraining admixtures.

When used in combination with other admixtures, care must be taken to dispense each admixture separately into the concrete. Do not mix with dry cement.

Packaging

Plastocrete 161 is supplied in 55 gallon (208 liter) drums and bulk delivery.

Storage and Shelf-life

Plastocrete 161 should be stored at above 40°F (5°C). If frozen, thaw and agitate thoroughly to return to normal state before use.

Shelf life when stored in dry warehouse conditions between 50°F and 80°F (10°C - 27°C) is one year.

Typical Data

Appearance	Dark Brown liquid
Specific Gravity	Approx. 1.2

Caution

Skin and eye irritant; avoid contact. The use of NIOSH approved respirator, safety goggles and rubber gloves is recommended. Avoid breathing product. Use with adequate ventilation. Remove contaminated clothing.

Handling and Storage

Avoid direct contact. Wear personal protective equipment (chemical resistant goggles/gloves/clothing) to prevent direct contact with skin and eyes. Use only in well ventilated areas. Wash thoroughly with soap and water after use. Remove contaminated clothing and launder before reuse.

First Aid

Eyes: Hold eyelids apart and flush thoroughly with water for 15 minutes. **Skin:** Remove contaminated clothing. Wash skin thoroughly for 15 minutes with soap and water. **Inhalation:** Remove person to fresh air. **Ingestion:** Do not induce vomiting. Dilute with water. Contact a physician. **In all cases, contact a physician immediately if symptoms persist.**

Clean Up

Use personal protective equipment (chemical resistant goggles/gloves/clothing). Without direct contact, remove spilled or excess product and place in suitable sealed container. Dispose of excess product and container in accordance with applicable environmental regulations.

KEEP CONTAINER TIGHTLY CLOSED • KEEP OUT OF REACH OF CHILDREN • NOT FOR INTERNAL CONSUMPTION • FOR INDUSTRIAL USE ONLY

All information provided by Sika Corporation ("Sika") concerning Sika products, including but not limited to, any recommendations and advice relating to the application and use of Sika products, is given in good faith based on Sika's current experience and knowledge of its products when properly stored, handled and applied under normal conditions in accordance with Sika's instructions. In practice, the differences in materials, substrates, storage and handling conditions, actual site conditions and other factors outside of Sika's control are such that Sika assumes no liability for the provision of such information, advice, recommendations or instructions related to its products, nor shall any legal relationship be created by or arise from the provision of such information, advice, recommendations or instructions related to its products. The user of the Sika product(s) must test the product(s) for suitability for the intended application and purpose before proceeding with the full application of the product(s).

Sika reserves the right to change the properties of its products without notice. All sales of Sika product(s) are subject to its current terms and conditions of sale which are available at www.sikacorp.com or by calling 800-933-7452.

Prior to each use of any Sika product, the user must always read and follow the warnings and instructions on the product's most current Technical Data Sheet, product label and Material Safety Data Sheet which are available at www.sikaconstruction.com or 800-933-7452. Nothing contained in any Sika materials relieves the user of the obligation to read and follow the warnings and instruction for each Sika product as set forth in the current Technical Data Sheet, product label and Material Safety Data Sheet prior to product use.

SIKA warrants this product for one year from date of installation to be free from manufacturing defects and to meet the technical properties on the current Technical Data Sheet if used as directed within shelf life. User determines suitability of product for intended use and assumes all risks. Buyer's sole remedy shall be limited to the purchase price or replacement of product exclusive of labor or cost of labor. **NO OTHER WARRANTIES EXPRESS OR IMPLIED SHALL APPLY INCLUDING ANY WARRANTY OF MERCHANTIBILITY OR FITNESS FOR A PARTICULAR PURPOSE. SIKA SHALL NOT BE LIABLE UNDER ANY LEGAL THEORY FOR SPECIAL OR CONSEQUENTIAL DAMAGES. SIKA SHALL NOT BE RESPONSIBLE FOR THE USE OF THIS PRODUCT IN A MANNER TO INFRINGE ON ANY PATENT OR ANY OTHER INTELLECTUAL PROPERTY RIGHTS HELD BY OTHERS.**

Sika Corporation
201 Polito Avenue
Lyndhurst, NJ 07071
Phone: (201) 933-8800
Fax: (201) 933-6225
www.sikaconstruction.com

Sika Canada Inc.
601, Delmar Avenue
Pointe-Claire, QC H9R 4A9
Phone: (514) 697-2610
Fax: (514) 697-3087
www.sika.ca

1-800-933-SIKA

Regional Information and Sales Centers. For the location of your nearest Sika representative, contact your regional center.

U.S. : **North East Region:** Fairless Hills, PA, Phone: (215) 295 -6600 **North Central Region:** Marion, OH, Phone: (800) 851-1545
South East Region: Conyers, GA, Phone: (770) 760-1300 **South Central Region:** Mesquite, TX, Phone: (972) 289-6480
Western Region: Santa Fe Springs, CA, Phone: (562) 903-3650

Canada: **Ontario:** Mississauga, ON, Phone: (905) 795-3177, **Alberta:** Edmonton, AB, Phone: (780) 486-6111

Quality Certification Numbers: Lyndhurst: FM 69711 (ISO 9000), FM 70421 (QS 9000), Marion: FM 69715, Kansas City: FM 69107, Santa Fe Springs: FM 69408

Sika and Plastocrete are registered trademarks. Made in USA. Printed in USA.

Product Data Sheet
Edition 09.25.2009
Identification no. 147-540
Sika Air

Construction

Sika® Air

Air Entraining Admixture

Description

Sika Air admixture is an aqueous solution of organic materials.

Sika Air meets the requirements of ASTM C-260 for air entraining admixtures.

Applications

Sika Air is recommended for use whenever air entrained concrete is desired. Ready-mix, precast and block producers can achieve predictable and uniform entrained air contents in concrete, even where harsh lean mixes are used or fly-ash is added to the concrete.

Advantages

Durability:

- Air entrainment is recognized as the most effective prevention against concrete scaling in exposed environments. Air entrained concrete delivers particular benefits in the form of increased concrete durability. This is important in colder climates where frost and freeze-thaw cycles can cause scaling and damage to the concrete surface.
- Air entraining agents help to prevent scaling by creating microscopic air voids that water trapped in the concrete can expand into when the concrete freezes, thus preventing cracks caused by the natural expansion. Entrained air voids in the concrete will also increase durability in harsh environments where concrete is exposed to deicing salts, marine salts and sulfates.

Workability and Placeability:

- Workability and placeability are also improved by the lubricating action of the microscopic bubbles in the concrete. Concrete will flow better, and bleeding and shrinkage will be reduced because less water is needed to obtain the desired workability.

How to Use

Dosage

Dosage rates for Sika Air will typically fall between 0.5 and 3 fl. oz. per 100 lbs. (32 - 195 ml/100 kg) of cementitious to entrain between 4 and 6 percent air. Higher air contents may be obtained by increasing the dosage rate.

Dosage rates will vary depending on the air content required for a particular project. Typically air contents will be specified in the range of 4 to 8 percent by volume.

Other factors that may affect the amount of air entrained into the concrete including total cementitious content, type of pozzolanic materials, sand gradation, salt/clay in aggregates, temperature and water content. The use of fly ash, particularly high LOI fly ash, can result in a higher dosage of air entrainment. Sika recommends that trial mixes be performed whenever material or any other changes are made that may affect the amount of entrained air.

In mixes requiring a lower or higher amount dosage rate, please contact your local regional Sika office or Sika technical service department at 1-800-933-7452 for further information.

Construction

Mixing	Measure the required quantity per batch manually or with automatic dispenser equipment. Add Sika Air to mixing water or sand. Do not mix with dry cement. When Sika Air is used in combination with other admixtures, care must be taken to dispense each admixture separately into the mix. **Combination with Other Admixtures:** Combination with other admixtures, particularly water reducers and retarders, may increase the amount of entrained air in the mix. Air contents should be checked with an air-meter after batching and dosage adjustments made at the concrete plant.
Packaging	Sika Air is available in 55 gallon drum (208 liter), 275 gallon totes (1040 liters) drums and bulk delivery.
Storage and Shelf life	Sika Air should be stored at above 40°F (5°C). If frozen, thaw and agitate thoroughly to return to normal state. Shelf life when stored in dry warehouse conditions between 50°F and 80°F (10°C - 27°C) is one year.

Typical Data

Appearance	Dark Amber liquid.
Specific Gravity	Approx. 1.0
CAUTION: IRRITANT	Contains Aqueous Solution (CAS:Mixture). May cause eye/skin/respiratory irritaton. May be harmful if swallowed.
Handling and Storage	Avoid direct contact. Wear personal protective equipment (chemical resistant goggles/gloves/clothing) to prevent direct contact with skin and eyes. Use only in well ventilated areas. Wash thoroughly with soap and water after use. Remove contaminated clothing and launder before reuse.
First Aid	**Eyes:** Hold eyelids apart and flush thoroughly with water for 15 minutes. **Skin:** Remove contaminated clothing. Wash skin thoroughly for 15 minutes with soap and water. **Inhalation:** Remove person to fresh air. **Ingestion:** Do not induce vomiting. Dilute with water. Contact physician. **In all cases contact a physician immediately if symptoms persist.**
Safety	Tested and Certified by WQA according to NSF/ANSI 61 Section 5 for materials safety.
Clean Up	Use personal protective equipment (chemical resistant goggles/gloves/clothing). Without direct contact, remove spilled or excess product and place in suitable sealed container. Dispose of excess product and container in accordance with applicable environmental regulations.

KEEP CONTAINER TIGHTLY CLOSED • KEEP OUT OF REACH OF CHILDREN • NOT FOR INTERNAL CONSUMPTION • FOR INDUSTRIAL USE ONLY

All information provided by Sika Corporation ("Sika") concerning Sika products, including but not limited to, any recommendations and advice relating to the application and use of Sika products, is given in good faith based on Sika's current experience and knowledge of its products when properly stored, handled and applied under normal conditions in accordance with Sika's instructions. In practice, the differences in materials, substrates, storage and handling conditions, actual site conditions and other factors outside of Sika's control are such that Sika assumes no liability for the provision of such information, advice, recommendations or instructions related to its products, nor shall any legal relationship be created by or arise from the provision of such information, advice, recommendations or instructions related to its products. The user of the Sika product(s) must test the product(s) for suitability for the intended application and purpose before proceeding with the full application of the product(s).

Sika reserves the right to change the properties of its products without notice. All sales of Sika product(s) are subject to its current terms and conditions of sale which are available at www.sikacorp.com or by calling 800-933-7452.

Prior to each use of any Sika product, the user must always read and follow the warnings and instructions on the product's most current Technical Data Sheet, product label and Material Safety Data Sheet which are available at www.sikaconstruction.com or 800-933-7452. Nothing contained in any Sika materials relieves the user of the obligation to read and follow the warnings and instruction for each Sika product as set forth in the current Technical Data Sheet, product label and Material Safety Data Sheet prior to product use.

SIKA warrants this product for one year from date of installation to be free from manufacturing defects and to meet the technical properties on the current Technical Data Sheet if used as directed within shelf life. User determines suitability of product for intended use and assumes all risks. Buyer's sole remedy shall be limited to the purchase price or replacement of product exclusive of labor or cost of labor. **NO OTHER WARRANTIES EXPRESS OR IMPLIED SHALL APPLY INCLUDING ANY WARRANTY OF MERCHANTIBILITY OR FITNESS FOR A PARTICULAR PURPOSE. SIKA SHALL NOT BE LIABLE UNDER ANY LEGAL THEORY FOR SPECIAL OR CONSEQUENTIAL DAMAGES. SIKA SHALL NOT BE RESPONSIBLE FOR THE USE OF THIS PRODUCT IN A MANNER TO INFRINGE ON ANY PATENT OR ANY OTHER INTELLECTUAL PROPERTY RIGHTS HELD BY OTHERS.**

Sika Corporation
201 Polito Avenue
Lyndhurst, NJ 07071
Phone: (201) 933-8800
Fax: (201) 933-6225
www.sikaconstruction.com

Sika Canada Inc.
601, Delmar Avenue
Pointe-Claire, QC H9R 4A9
Phone: (514) 697-2610
Fax: (514) 697-3087
www.sika.ca

1-800-933-SIKA

Regional Information and Sales Centers. For the location of your nearest Sika representative, contact your regional center.

U.S. : **North East Region:** Fairless Hills, PA, Phone: (215) 295 -6600 **North Central Region:** Marion, OH, Phone: (800) 851-1545
South East Region: Conyers, GA, Phone: (770) 760-1300 **South Central Region:** Mesquite, TX, Phone: (972) 289-6480
Western Region: Santa Fe Springs, CA, Phone: (562) 903-3650

Canada: **Ontario:** Mississauga, ON, Phone: (905) 795-3177, **Alberta:** Edmonton, AB, Phone: (780) 486-6111

Quality Certification Numbers: Lyndhurst: FM 69711 (ISO 9000), FM 70421 (QS 9000), Marion: FM 69715, Kansas City: FM 69107, Santa Fe Springs: FM 69408

Sika is a registered trademark. Made in USA. Printed in USA.

DEPARTMENT OF THE ARMY
ALBUQUERQUE DISTRICT, CORPS OF ENGINEERS
ALBUQERQUE DISTRICT OFFICE
4101 JEFFERSON PLAZA NE
ALBUQUERQUE, NM 87109

SUBMITTAL REVIEW VERIFICATION SHEET

PROJECT TITLE: Kirtland BFF Mid-Plume Pump and Treat System Expansion
CONTRACT NUMBER: W912DR-12-D-0006 DM01
DATE RECEIVED: 11-1-2017
DATE REVIEWED: 11-6-2017

DESCRIPTION OF ITEMS REVIEWED:

1. Pipe Coating associated with the KAFB-106239 conveyance line.

NO EXCEPTIONS TAKEN.	**X**
EXCEPTIONS AS NOTED ON DRAWINGS AND/OR ATTACHED SHEETS(S). RESUBMISSION NOT REQUIRED.	
EXCEPTIONS AS NOTED ON DRAWINGS AND/OR ATTACHED SHEETS(S). RESUBMISSION REQUIRED.	
RECEIPT ACKKNOWLEDGED.	

Notes:

NOTE: ITEMS REVIEWED AS TO GENERAL LAYOUT ONLY. DIMENSIONS AND QUANTITIES NOT CHECKED. REVIEW DOES NOT RELIEVE CONTRACTOR OF RESPONSIBILITIES FOR ANY ERRORS WHICH MAY EXIST AS CONTRACTOR SHALL BE RESPONSIBLE FOR DIMENSIONS AND DESIGN OF ADEQUATE CORRECTIONS, DETAILS AND SATISFACTORY CONSTRUCTION OF WORK.

SIGNATURE SALAZAR.CARLOS.F.IV.1232198555 **DATE** 11/6/2017

EA Engineering, Science, and Technology, Inc., PBC

Submittal Review Sheet 1

Project Name: **Kirtland BFF Mid-Plume Pump and Treat System Expansion**			Date Received: **10/26/17**
Project Owner: **Kirtland Air Force Base**			Checked By: **Tyler Curley**
Contractor: **RMCI, Inc.**	Engineer: **EA Engineering, Science and Technology, Inc., PBC.**		Log Page: **NA**
Address: **6211 Chappell Rd NE, Albuquerque, NM 87113**	Address: **320 Gold Ave. SW, Suite 1300 Albuquerque, NM 87102**		EA No.: **62599DM01**
			Spec. Section: **NA**
			Drawing/Detail No.: **RFI #1**
ATTN: **Phillip Johnson**	ATTN: **Devon Jercinovic**	1st Sub	Re-Sub
Date Transmitted: **11/01/2017**	Prev. Transmittal Date:		

Item No.	No. Copies	Description	Manufacturer	Mfg/Vendor Dwg or Detail	Action Taken*
1	1	Pipe Coating	Sherwin Williams		A

The Action Designated Above is in Accordance with the Following Legend:

A – Furnish as Submitted
B – Furnish as Noted
C – Revise and Re-submit
1. Not enough information for review.
2. No reproducible submitted.
3. Copies illegible.
4. Not enough copies submitted.
5. Wrong sequence number.
6. Wrong resubmittal number.
7. Wrong Spec. Section.
8. Wrong form used.
9. See Comments.

D – Rejected
E – Engineer's Review not Required
1. Submittal not required.
2. Supplemental Information. Submittal retained for Information purposes only.
3. Information reviewed and approved on prior submittal.
4. See Comments.

Review is for general compliance with Contract Documents. No responsibility is assumed for correctness of dimensions or detail. Contractor is required to specify deviations from contract requirements. Lack of exceptions noted by Engineer does not waive Contractor's obligation to comply with Drawings and Specifications.

Comments:
Items reviewed and confirmed to meet requirements
Issues in Bold

Coating is of specified alkyd type.

By: _____ Date: 11/01/17

Distribution: [1] Contractor [1] Engineer [1] Owner

SHERWIN-WILLIAMS
816 1ST ST NW
ALBUQUERQUE, NM 87102 2353
(505) 243-6677

10/23/2017

BOGAN BROTHERS PAINTING
3435 VASSAR DR NE
ALBUQUERQUE NM 871072025

Re: Submittal for KAFB Groundwater Conveyance Steel Pipe

Dear Jeff Chynoweth:

Thank you for considering Sherwin-Williams products for the KAFB Groundwater Conveyance Steel Pipe project. Included in this package is the Sherwin-Williams submittal for the above referenced project.

Should you require assistance or have any questions or concerns, please contact me at or e-mail me at john.c.anderson@sherwin.com.

Sincerely,

John Anderson
Sherwin-Williams
Sales Representative

SCHEDULE

Bollards and Steel Pipe in Vault

Steel

Primer: B50WZ0001 - Kem Kromik® Universal Metal Primer Off White

Apply at 6.0-8.0 WFT to achieve 3.3-4.4 DFT

Topcoat: B56W00311 - Steel-Master 9500 30% Silicone Alkyd Enamel Extra White/Tint Base

Apply at 3.5-5.0 WFT to achieve 2.2-3.2 DFT

END OF SECTION

KEM KROMIK®
UNIVERSAL METAL PRIMER

B50NZ0006 BROWN
B50WZ0001 OFF WHITE
B50AZ0006 GRAY

As of 08/25/2017, Complies with:			
OTC	No	LEED® 09 NC,.CI	No
OTC Phase II	No	LEED® 09 CS	No
SCAQMD	No	LEED® 09 S	No
CARB	No	LEED® v4 Emissions	No
CARB SCM 2007	No	LEED® v4 VOC	No
Canada	No	MPI	Yes

CHARACTERISTICS

KEM KROMIK UNIVERSAL METAL PRIMER is a rust inhibiting, modified phenolic alkyd resin primer designed for use over iron and steel substrates. Can be used as a universal primer under high performance topcoats. Suitable as a barrier coat over conventional coatings which would normally be attacked by strong solvents in high performance coatings.

Features:
- High film build to protect sand blasted steel
- Corrosion resistant
- Universal, can be topcoated with epoxies and urethanes
- Exterior/interior metal primer
- Suitable for use in USDA inspected facilities

For use on properly prepared:
- Steel

Recommended for use in:
- Shopcoat primer
- Maintenance primer
- Structural steel
- Machinery
- Structural steel
- Marine vessels
- Barrier coating
- Hand rail
- Storage tanks
- Bar joists
- Steel pipe

Tinting: **DO NOT TINT**
Shelf Life: 36 months, unopened
Finish: Flat

White B50WZ0001
(may vary by base)
VOC(less exempt solvents) 389 g/L - 3.24 lb/gal
(as per 40 CFR 59.406 and SOR/2009-264, s. 12)
Volume Solids: 55 ± 2%
Weight Solids: 75 ± 2%
Weight per Gallon: 12.86 lb/gal ± .2 lb
Flash Point: 80°F TCC

Brown B50NZ0006
(may vary by base)
VOC(less exempt solvents) 409 g/L - 3.24 lb/gal
(as per 40 CFR 59.406 and SOR/2009-264, s. 12)
Volume Solids: 53 ± 2%
Weight Solids: 73 ± 2%
Weight per Gallon: 12.62 lb/gal ± .2 lb
Flash Point: 80°F TCC

SPECIFICATIONS

Color: White, Brown & Gray
Recommended Spread Rate per coat: White B50WZ0001 (varies by base)

wet mils:	6.0 –8.0
dry mils:	3.3 - 4.4
coverage:	267- 200 sq ft/gal approximate

Theoretical coverage: 882 sq ft/gal @ 1 mil dry
Drying Schedule @ 6.0 mils wet, 50% RH:

	@ 40°F/4.5°C	@ 77°F/25°C	@ 110°F/43°C
To touch:	2 hours	30 minutes	15 minutes
Tack handle:	2.5 hours	1 hours	20 minutes
To recoat: with itself & alkyds	2.5 hours	1 hours	45 minutes
To recoat:*	36 hours	16 hours	16 hours
To cure:	7 days	7 days	7 days

* Recoat with hot solvents or high performance coatings. For maximum adhesion, acrylic topcoats require 48 - 72 hours drying of primer. Drying and recoat times are temperature, humidity, and film thickness dependent.

RECOMMENDED SYSTEMS

Steel:
1ct. Kem Kromik Universal Primer
1-2 cts. Topcoat
Acceptable Topcoats:
Acrolon 218 HS Polyurethane
Hi-Solids Polyurethane
Industrial Enamel
Macropoxy HS Epoxy
Metalatex Semi-Gloss Enamel
Pro Industrial Acrylic
Pro Industrial DTM Acrylic
Pro Industrial Waterbased Epoxy
Pro Industrial Waterbased Alkyd-Urethane
Pro Industrial Multi-Surface Acrylic
Pro Industrial Pre-Catalyzed Epoxy & Urethane
Pro Industrial Urethane Alkyd Enamel
Pro Industrial Waterbased Acrolon 100
Sher-Cryl
Silver-Brite Aluminum
Steel Master 9500
Tile-Clad HS Epoxy

The systems listed above are representative of the product's use, other systems may be appropriate. Other topcoats may be appropriate.

System: (unless otherwise indicated)
Substrate: Steel
Surface Preparation: SSPC-SP6/NACE 3
Primer: 1ct. Kem Kromik Universal Metal Primer,@ 3.0 –4.4 mils dft/ct.

Adhesion[1]:
Method: ASTM D3359
Result: 4B
Corrosion Resistance[1]:
Method: ASTM D5894, 1008
Result: Pass
Dry Heat Resistance:
Method: ASTM D2485
Result: 200°F
Flexibility[1]:
Method: ASTM D522, 1/4" mandrel
Result: Pass
Fineness of grind[2]:
Method: Hegman
Result: 4 Hegman minimum
Sag Test[2]:
Method: ASTM D4400
Result: 12 mils minimum
Viscosity[2]: 84-94 KU
Water Resistance[1]:
Result: Pass

[1] 1ct. Kem Kromik Primer 4.5-5 WFT [2] Standard test based on Certificate of Analysis

continued on back

KEM KROMIK® UNIVERSAL METAL PRIMER

SURFACE PREPARATION

WARNING! Removal of old paint by sanding, scraping or other means may generate dust or fumes that contain lead. Exposure to lead dust or fumes may cause brain damage or other adverse health effects, especially in children or pregnant women. Controlling exposure to lead or other hazardous substances requires the use of proper protective equipment, such as a properly fitted respirator (**NIOSH** approved) and proper containment and cleanup. For more information, call the National Lead Information Center at **1-800-424-LEAD** (in US) or contact your local health authority.

Iron & Steel- Minimum surface preparation is Hand Tool Clean per SSPC-SP2. Remove all oil and grease from surface by Solvent Cleaning per SSPC-SP1. For better performance, use Commercial Blast Cleaning per SSPC-SP6/NACE 3, blast clean all surfaces using a sharp, angular abrasive for optimum surface profile (2 mils). Prime any bare steel within 8 hours or before flash rusting occurs.

Previously Painted Surfaces - If in sound condition, clean the surface of all foreign material. Smooth, hard or glossy coatings and surfaces should be dulled by abrading the surface. Apply a test area, allowing paint to dry one week before testing adhesion. If adhesion is poor, additional abrasion of the surface and/or removal of the previous coating may be necessary. Retest surface for adhesion. If paint is peeling or badly weathered, clean surface to sound substrate and treat as a new surface as above. Recognize that any surface preparation short of total removal of the old coating may compromise the service length of the system.
Other substrates may or may not be appropriate. If a specific substrate is not listed above, consult your Sherwin-Williams representative for more information.

As a "Barrier" Coat - If it is necessary to topcoat a previously painted surface with chemically resistant or strong solvent topcoats, Kem Kromik Universal Metal Primer can be used as a barrier coat to help reduce lifting. Apply a coat of Kem Kromik Universal Metal Primer to a small area to test for adhesion or bleeding. If there is evidence of either poor adhesion or bleeding, clean surface to bare steel and apply recommended system.

APPLICATION PROCEDURES

Apply paint at the recommended film thickness and spreading rate as indicated on front page. Application of coating above maximum or below minimum recommended spreading rate may adversely affect coating performance. Spreading rates are calculated on volume solids and do not include an application loss factor due to surface profile, roughness, or porosity of the surface, skill, and technique of the applicator, method of application, various surface irregularities, material lost during mixing, spillage, over thinning, climatic conditions, and excessive film build.

SAFETY PRECAUTIONS

Refer to the SDS sheets before use. **FOR PROFESSIONAL USE ONLY**
Published technical data and instructions are subject to change without notice. Contact your Sherwin-Williams representative for additional technical data and instructions.

PERFORMANCE TIPS

Mix paint thoroughly to a uniform consistency with slow speed power agitation prior to use.
Stripe coat crevices, welds, and sharp angles to prevent early failure in these areas.
When using spray application, use a 50% overlap with each pass of the gun to avoid holidays, bare areas, and pinholes. If necessary, cross spray at a right angle.
Not recommended for immersion service or exposure to acids, alkalis, or strong solvents.
Intimate contact with the steel surface and primer is necessary for adequate rust inhibition and adhesion.
For maximum adhesion, acrylic topcoats require 48 - 72 hours drying of primer.

APPLICATION

Refer to the SDS sheet before use
Temperature: 40°F(4.5°C) minimum
120°F(49°C) maximum
(Air, surface, and material)
At least 5°F above dew point
Relative humidity: 85% maximum

The following is a guide. Changes in pressures and tip sizes may be needed for proper spray characteristics. Always purge spray equipment before use with listed reducer. Any reduction must be compatible with the existing environmental and application conditions.

Reducer ..... Not recommended
Clean Up Xylene,R2K4

Airless Spray
Pressure ..... 1800-3000 psi
Hose ..... 1/4" ID
Tip ..... .015-.019"
Filter ..... 60 mesh

Conventional Spray
Gun ..... Binks 95
Fluid Nozzle 63C
Air Nozzle 63PB
Atomization Pressure ..... 50 PSI
Fluid Pressure ..... 15-20 PSI

Brush ..... Natural Bristle

Roll .... .3/8" woven with solvent resistant core

If specific application equipment is not listed above, equivalent equipment may be substituted

CLEANUP INFORMATION

Clean spills, spatters & tools with compliant cleanup solvent. After cleaning, flush spray equipment with compliant cleanup solvent to prevent rusting of the equipment. Follow manufacturer's safety recommendations when using solvents.

DANGER: Rags, steel wool, other waste soaked with this product, and sanding residue may spontaneously catch fire if improperly discarded. Immediately place rags, steel wool, other waste soaked with this product, and sanding residue in a sealed, water-filled, metal container. Dispose of in accordance with local fire regulations.

HOTW	08/09/2017	B50NZ0006	37 409
HOTW	08/09/2017	B50WZ0001	38 389
HOTW	08/09/2017	B50AZ0006	19 386

SP

The information and recommendations set forth in this Product Data Sheet are based upon tests conducted by or on behalf of The Sherwin-Williams Company. Such information and recommendations set forth herein are subject to change and pertain to the product offered at the time of publication. Consult your Sherwin-Williams representative or visit www.paintdocs.com to obtain the most current version of the PDS and/or an SDS.

STEEL MASTER™ 9500
30% SILICONE ALKYD

B56W00311 EXTRA WHITE
B56T00304 CLEAR TINT BASE
B56B00300 BLACK
B56Y00300 SAFETY YELLOW

As of 07/26/2017, Complies with:			
OTC	Yes	LEED® 09 NC,.CI	No
OTC Phase II	No	LEED® 09 CS	No
SCAQMD	No	LEED® 09 S	No
CARB	No	LEED® v4 Emissions	No
CARB SCM 2007	No	LEED® v4 VOC	No
Canada	Yes	MPI	

CHARACTERISTICS

STEEL MASTER 9500 is an exterior/interior, 30% silicone alkyd, protective topcoat. Dries to a tough, flexible finish with very good gloss and color retention and long term exterior durability for a single component alkyd product.

Features:
- Excellent color and gloss retention compared to conventional alkyds
- High gloss providing a "wet look"
- Can be applied as low as 45°F (7°C)
- Easy application properties
- Interior / Exterior application
- Suitable for use in USDA inspected facilities

For use on properly prepared:
- Steel
- Galvanized
- Aluminum
- Concrete & Masonry

Recommended for use in:
- Exterior equipment
- Machinery
- Signs
- Logo and identification enamel
- Buildings
- Structural steel
- Piping, tanks

Tinting with Maxitoner:

Base	Strength
Extra White & Clear Tint Base only	100%

Check color before using. Five minutes minimum mixing on a mechanical shaker is required for complete mixing of color.

Shelf Life: 36 months, unopened
Finish: 80°+@60° Gloss

Extra White B56W00311
(may vary by base)

VOC(less exempt solvents) 307 g/L - 2.56 lb/gal
(as per 40 CFR 59.406 and SOR/2009-264, s. 12)
Volume Solids: 64 ± 2%
Weight Solids: 76 ± 2%
Weight per Gallon: 10.82 lb/gal ± .2 lb
Flash Point: 112°F TCC

SPECIFICATIONS

Color: Extra White, Clear Tint Base, Black & Safety Yellow
Recommended Spread Rate per coat: Extra White B56W00311 (varies by base)

wet mils:	3.5 - 5.0
dry mils:	2.2 - 3.2
coverage:	466 - 320 sq ft/gal approximate

Theoretical coverage: 1026 sq ft/gal @ 1 mil dry
Drying Schedule @ 4.0 mils wet, 50% RH:

	@ 50°F/10°C	@ 77°F/25°C	@ 100°F/38°C
To touch:	5 hours	4 hours	1 hour
To handle:	2.5 days	8 hours	8 hours
To recoat:	2.5 days	18 hours	8 hours
To cure:	30 days	14 days	3 days

Drying and recoat times are temperature, humidity, and film thickness dependent.

RECOMMENDED SYSTEMS

Steel & Rusted Galvanized, acrylic primer:
1ct. Pro Industrial Pro-Cryl Primer
1-2cts. Steel Master 9500
Steel alkyd primer:
1ct. Kem Bond HS
Or
1ct. Kem Kromik Universal Metal Primer
1-2cts. Steel Master 9500
Aluminum:
1ct. DTM Wash Primer
1-2cts. Steel Master 9500

Galvanized Metal:
1ct. Galvite HS
1-2cts. Steel Master 9500
Concrete Block:
1ct. Pro Industrial Heavy Duty Block Filler
1-2cts. Steel Master 9500
Concrete Masonry:
1ct. Loxon Concrete and Masonry Primer
1-2cts. Steel Master 9500

The systems listed above are representative of the product's use, other systems may be appropriate. Other primers may be appropriate.

System: (unless otherwise indicated)
Substrate: Steel
Surface Preparation: SSPC-SP10
Primer: 1 ct. Kem Kromik Universal Metal Primer
Finish: 2 cts Steel Master 9500
*unless otherwise noted below

Adhesion:
Method: ASTM D4541
Result: 991 psi
Density[1]:
Result: 10.63-10.93
Dry Heat Resistance:
Method: ASTM D2485
Result: 200°F (discolors)
Fineness of grind[1]:
Method: Hegman
Result: 6 Hegman minimum

Salt Fog Resistance:
Method: ASTM B117, 1000 hours
Result: Rating 10 per ASTM D610 for rusting (field); Rating 10 per ASTM D714 for blistering
Sag Test[1]:
Method: ASTM D4400
Result: 9 mils minimum
Viscosity[1]: 90-100 KU

[1] *Standard test based on Certificate of Analysis*

continued on back

STEEL MASTER™ 9500 30% SILICONE ALKYD

SURFACE PREPARATION

WARNING! Removal of old paint by sanding, scraping or other means may generate dust or fumes that contain lead. Exposure to lead dust or fumes may cause brain damage or other adverse health effects, especially in children or pregnant women. Controlling exposure to lead or other hazardous substances requires the use of proper protective equipment, such as a properly fitted respirator (**NIOSH** approved) and proper containment and cleanup. For more information, call the National Lead Information Center at **1-800-424-LEAD** (in US) or contact your local health authority.

Iron & Steel- Minimum surface preparation is Hand Tool Clean per SSPC-SP2. Remove all oil and grease from surface by Solvent Cleaning per SSPC-SP1. For better performance, use Commercial Blast Cleaning per SSPC-SP6/NACE 3, blast clean all surfaces using a sharp, angular abrasive for optimum surface profile (2 mils). Prime any bare steel within 8 hours or before flash rusting occurs. Primer required.

Aluminum (Untreated) - Remove all oil, grease, dirt, oxide and other foreign material by Solvent Cleaning per SSPC-SP1. Primer required.

Galvanized Steel (Untreated) - Remove all oil, grease, dirt, oxide and other foreign material by Solvent Cleaning per SSPC-SP1. Allow to weather a minimum of six months prior to coating. When weathering is not possible or the surface has been treated with chromate or silicates, first solvent clean per SSPC-SP1 and apply a test patch. Allow paint to dry at least one week before testing adhesion. If adhesion is poor, brush blasting per SSPC-SP16 is necessary to remove these treatments. Rusty galvanizing requires a minimum of Hand Tool Cleaning per SSPC-SP2, prime the area the same day as cleaned. Primer required.

Concrete Block - Surface should be thoroughly clean and dry. Air, material and surface temperatures must be at least 50°F (10°C) before filling. Use Pro Industrial Heavy Duty Block Filler or Loxon Block Surfacer. The filler must be thoroughly dry before topcoating.
Masonry - All masonry must be free of dirt, oil, grease, loose paint, mortar, masonry dust, etc. Clean per SSPC-SP13/Nace 6/ ICRI No. 310.2R, CSP 1-3. Poured, troweled, or tilt-up concrete, plaster, mortar, etc. must be thoroughly cured at least 30 days at 75°F(23.9°C). Form release compounds and curing membranes must be removed by brush blasting. Brick must be allowed to weather for one year prior to surface preparation and painting. Weathered masonry and soft or porous cement board must be brush blasted or power tool cleaned to remove loosely adhering contamination and to get to a hard, firm surface. Apply one coat alkali resistant primer, following label recommendations. Primer required.

Previously Painted Surfaces - If in sound condition, clean the surface of all foreign material. Smooth, hard or glossy coatings and surfaces should be dulled by abrading the surface. Apply a test area, allowing paint to dry one week before testing adhesion. If adhesion is poor, additional abrasion of the surface and/or removal of the previous coating may be necessary. Retest surface for adhesion. If paint is peeling or badly weathered, clean surface to sound substrate and treat as a new surface as above. Recognize that any surface preparation short of total removal of the old coating may compromise the service length of the system.

Other substrates may or may not be appropriate. If a specific substrate is not listed above, consult your Sherwin-Williams representative for more information.

APPLICATION PROCEDURES

Apply paint at the recommended film thickness and spreading rate as indicated on front page. Application of coating above maximum or below minimum recommended spreading rate may adversely affect coating performance. Spreading rates are calculated on volume solids and do not include an application loss factor due to surface profile, roughness, or porosity of the surface, skill, and technique of the applicator, method of application, various surface irregularities, material lost during mixing, spillage, over thinning, climatic conditions, and excessive film build.

SAFETY PRECAUTIONS

Refer to the SDS sheets before use. **FOR PROFESSIONAL USE ONLY**
Published technical data and instructions are subject to change without notice. Contact your Sherwin-Williams representative for additional technical data and instructions.

PERFORMANCE TIPS

Mix paint thoroughly to a uniform consistency with slow speed power agitation prior to use.
Stripe coat crevices, welds, and sharp angles to prevent early failure in these areas.
When using spray application, use a 50% overlap with each pass of the gun to avoid holidays, bare areas, and pinholes. If necessary, cross spray at a right angle.
Do not use colorants formulated for interior use only when applying exterior.
No reduction of material is recommended, as this can affect film build, appearance, and adhesion.

APPLICATION

Refer to the SDS sheet before use
Temperature: 45°F(7°C) minimum
100°F(38°C) maximum
(Air, surface, and material)
At least 5°F above dew point
Relative humidity: 85% maximum

The following is a guide. Changes in pressures and tip sizes may be needed for proper spray characteristics. Always purge spray equipment before use with listed reducer. Any reduction must be compatible with the existing environmental and application conditions.

Reducer .....Not recommended
Clean Up .....Mineral Spirits, R1K4

Airless Spray
Pressure .....2700-3000 psi
Hose .....3/8" ID
Tip ....013-.017"
Filter .....100 mesh

Conventional Spray
Gun.....Binks 95
Fluid Nozzle..... 63B
AirNozzle 63PB
Atomization Pressure .....50-60 psi
Fluid Pressure .....10-20 psi

Brush .....Natural Bristle
Roll.1/4-3/8" woven with solvent resistant core

If specific application equipment is not listed above, equivalent equipment may be substituted.

In order to avoid blockage of spray equipment, clean equipment before use or before periods of extended downtime with compliant solvent.

CLEANUP INFORMATION

Clean spills, spatters & tools with compliant cleanup solvent. After cleaning, flush spray equipment with compliant cleanup solvent to prevent rusting of the equipment. Follow manufacturer's safety recommendations when using solvents.

HOTW	07/26/2017	B56W00311	16 307
HOTW	07/26/2017	B56T00304	12 300

The information and recommendations set forth in this Product Data Sheet are based upon tests conducted by or on behalf of The Sherwin-Williams Company. Such information and recommendations set forth herein are subject to change and pertain to the product offered at the time of publication. Consult your Sherwin-Williams representative or visit www.paintdocs.com to obtain the most current version of the PDS and/or an SDS.

SAFETY DATA SHEET

B50WZ1

Section 1. Identification

Product name : KEM KROMIK® Universal Metal Primer (VOC Comp.)
Off White

Product code : B50WZ1

Other means of identification : Not available.

Product type : Liquid.

Relevant identified uses of the substance or mixture and uses advised against

Not applicable.

Manufacturer : THE SHERWIN-WILLIAMS COMPANY
101 W. Prospect Avenue
Cleveland, OH 44115

Emergency telephone number of the company : US / Canada: (216) 566-2917
Mexico: SETIQ 01-800-00-214-00 / (52) 55-5559-1588 24 hours / 365 days a year

Product Information Telephone Number : US / Canada: (800) 524-5979
Mexico: Not Available

Regulatory Information Telephone Number : US / Canada: (216) 566-2902
Mexico: Not Available

Transportation Emergency Telephone Number : US / Canada: (800) 424-9300
Mexico: SETIQ 01-800-00-214-00 / (52) 55-5559-1588 24 hours / 365 days a year

Section 2. Hazards identification

OSHA/HCS status : This material is considered hazardous by the OSHA Hazard Communication Standard (29 CFR 1910.1200).

Classification of the substance or mixture : FLAMMABLE LIQUIDS - Category 3
SKIN CORROSION/IRRITATION - Category 2
SERIOUS EYE DAMAGE/ EYE IRRITATION - Category 2A
CARCINOGENICITY - Category 1A
TOXIC TO REPRODUCTION (Unborn child) - Category 2
SPECIFIC TARGET ORGAN TOXICITY (SINGLE EXPOSURE) (Respiratory tract irritation) - Category 3
SPECIFIC TARGET ORGAN TOXICITY (REPEATED EXPOSURE) (lungs) - Category 1
ASPIRATION HAZARD - Category 1

Percentage of the mixture consisting of ingredient(s) of unknown oral toxicity: 12.3%
Percentage of the mixture consisting of ingredient(s) of unknown dermal toxicity: 21.6%
Percentage of the mixture consisting of ingredient(s) of unknown inhalation toxicity: 14.7%

GHS label elements

Hazard pictograms :

Signal word : Danger

Section 2. Hazards identification

Hazard statements : Flammable liquid and vapor.
Causes serious eye irritation.
Causes skin irritation.
May cause cancer.
Suspected of damaging the unborn child.
May be fatal if swallowed and enters airways.
May cause respiratory irritation.
Causes damage to organs through prolonged or repeated exposure. (lungs)

Precautionary statements

Prevention : Obtain special instructions before use. Do not handle until all safety precautions have been read and understood. Wear protective gloves. Wear eye or face protection. Wear protective clothing. Keep away from heat, hot surfaces, sparks, open flames and other ignition sources. No smoking. Use explosion-proof electrical, ventilating, lighting and all material-handling equipment. Use only non-sparking tools. Take precautionary measures against static discharge. Keep container tightly closed. Use only outdoors or in a well-ventilated area. Do not breathe vapor. Do not eat, drink or smoke when using this product. Wash hands thoroughly after handling.

Response : Get medical attention if you feel unwell. IF exposed or concerned: Get medical attention. IF INHALED: Remove person to fresh air and keep comfortable for breathing. Call a POISON CENTER or physician if you feel unwell. IF SWALLOWED: Immediately call a POISON CENTER or physician. Do NOT induce vomiting. IF ON SKIN (or hair): Take off immediately all contaminated clothing. Rinse skin with water or shower. IF ON SKIN: Wash with plenty of soap and water. Take off contaminated clothing and wash it before reuse. If skin irritation occurs: Get medical attention. IF IN EYES: Rinse cautiously with water for several minutes. Remove contact lenses, if present and easy to do. Continue rinsing. If eye irritation persists: Get medical attention.

Storage : Store locked up. Store in a well-ventilated place. Keep cool.

Disposal : Dispose of contents and container in accordance with all local, regional, national and international regulations.

Supplemental label elements

DELAYED EFFECTS FROM LONG TERM OVEREXPOSURE. Contains solvents which can cause permanent brain and nervous system damage. Intentional misuse by deliberately concentrating and inhaling the contents can be harmful or fatal. WARNING: This product contains chemicals known to the State of California to cause cancer and birth defects or other reproductive harm. FOR INDUSTRIAL USE ONLY. Adequate ventilation required when sanding or abrading the dried film. If Adequate ventilation cannot be provided wear an approved particulate respirator (NIOSH approved). Follow respirator manufacturer's directions for respirator use. DELAYED EFFECTS FROM LONG TERM OVEREXPOSURE. Abrading or sanding of the dry film may release Crystalline Silica which has been shown to cause lung damage and cancer under long term exposure.

Please refer to the SDS for additional information. Keep out of reach of children. Do not transfer contents to other containers for storage.

Hazards not otherwise classified : DANGER: Rags, steel wool, other waste soaked with this product, and sanding residue may spontaneously catch fire if improperly discarded. Immediately place rags, steel wool, other waste soaked with this product, and sanding residue in a sealed, water-filled, metal container. Dispose of in accordance with local fire regulations.

Section 3. Composition/information on ingredients

Substance/mixture : Mixture

Other means of identification : Not available.

CAS number/other identifiers

Section 3. Composition/information on ingredients

Ingredient name	% by weight	CAS number
Calcium Carbonate	38.13	471-34-1
Xylene	10.41	1330-20-7
Titanium Dioxide	10.01	13463-67-7
Talc	3.91	14807-96-6
1,2,4-Trimethylbenzene	3.7	95-63-6
Toluene	3.15	108-88-3
Light Aromatic Hydrocarbons	2.46	64742-95-6
Ethylbenzene	1.84	100-41-4
Cumene	0.49	98-82-8
Crystalline Silica, respirable powder	0.21	14808-60-7
Methyl Isobutyl Ketone	0.14	108-10-1

Any concentration shown as a range is to protect confidentiality or is due to batch variation.

There are no additional ingredients present which, within the current knowledge of the supplier and in the concentrations applicable, are classified as hazardous to health and hence require reporting in this section.

Occupational exposure limits, if available, are listed in Section 8.

Section 4. First aid measures

Description of necessary first aid measures

Eye contact : Immediately flush eyes with plenty of water, occasionally lifting the upper and lower eyelids. Check for and remove any contact lenses. Continue to rinse for at least 10 minutes. Get medical attention.

Inhalation : Remove victim to fresh air and keep at rest in a position comfortable for breathing. If it is suspected that fumes are still present, the rescuer should wear an appropriate mask or self-contained breathing apparatus. If not breathing, if breathing is irregular or if respiratory arrest occurs, provide artificial respiration or oxygen by trained personnel. It may be dangerous to the person providing aid to give mouth-to-mouth resuscitation. Get medical attention. If necessary, call a poison center or physician. If unconscious, place in recovery position and get medical attention immediately. Maintain an open airway. Loosen tight clothing such as a collar, tie, belt or waistband.

Skin contact : Flush contaminated skin with plenty of water. Remove contaminated clothing and shoes. Wash contaminated clothing thoroughly with water before removing it, or wear gloves. Continue to rinse for at least 10 minutes. Get medical attention. Wash clothing before reuse. Clean shoes thoroughly before reuse.

Ingestion : Get medical attention immediately. Call a poison center or physician. Wash out mouth with water. Remove dentures if any. Remove victim to fresh air and keep at rest in a position comfortable for breathing. If material has been swallowed and the exposed person is conscious, give small quantities of water to drink. Stop if the exposed person feels sick as vomiting may be dangerous. Aspiration hazard if swallowed. Can enter lungs and cause damage. Do not induce vomiting. If vomiting occurs, the head should be kept low so that vomit does not enter the lungs. Never give anything by mouth to an unconscious person. If unconscious, place in recovery position and get medical attention immediately. Maintain an open airway. Loosen tight clothing such as a collar, tie, belt or waistband.

Most important symptoms/effects, acute and delayed

Potential acute health effects

Eye contact : Causes serious eye irritation.

Inhalation : May cause respiratory irritation.

Skin contact : Causes skin irritation.

Ingestion : May be fatal if swallowed and enters airways.

Over-exposure signs/symptoms

Section 4. First aid measures

Eye contact : Adverse symptoms may include the following:
pain or irritation
watering
redness

Inhalation : Adverse symptoms may include the following:
respiratory tract irritation
coughing
reduced fetal weight
increase in fetal deaths
skeletal malformations

Skin contact : Adverse symptoms may include the following:
irritation
redness
reduced fetal weight
increase in fetal deaths
skeletal malformations

Ingestion : Adverse symptoms may include the following:
nausea or vomiting
reduced fetal weight
increase in fetal deaths
skeletal malformations

Indication of immediate medical attention and special treatment needed, if necessary

Notes to physician : Treat symptomatically. Contact poison treatment specialist immediately if large quantities have been ingested or inhaled.

Specific treatments : No specific treatment.

Protection of first-aiders : No action shall be taken involving any personal risk or without suitable training. If it is suspected that fumes are still present, the rescuer should wear an appropriate mask or self-contained breathing apparatus. It may be dangerous to the person providing aid to give mouth-to-mouth resuscitation. Wash contaminated clothing thoroughly with water before removing it, or wear gloves.

See toxicological information (Section 11)

Section 5. Fire-fighting measures

Extinguishing media

Suitable extinguishing media : Use dry chemical, CO_2, water spray (fog) or foam.

Unsuitable extinguishing media : Do not use water jet.

Specific hazards arising from the chemical : Flammable liquid and vapor. Runoff to sewer may create fire or explosion hazard. In a fire or if heated, a pressure increase will occur and the container may burst, with the risk of a subsequent explosion. The vapor/gas is heavier than air and will spread along the ground. Vapors may accumulate in low or confined areas or travel a considerable distance to a source of ignition and flash back.

Hazardous thermal decomposition products : Decomposition products may include the following materials:
carbon dioxide
carbon monoxide
phosphorus oxides
metal oxide/oxides

Section 5. Fire-fighting measures

Special protective actions for fire-fighters : Promptly isolate the scene by removing all persons from the vicinity of the incident if there is a fire. No action shall be taken involving any personal risk or without suitable training. Move containers from fire area if this can be done without risk. Use water spray to keep fire-exposed containers cool.

Special protective equipment for fire-fighters : Fire-fighters should wear appropriate protective equipment and self-contained breathing apparatus (SCBA) with a full face-piece operated in positive pressure mode.

Section 6. Accidental release measures

Personal precautions, protective equipment and emergency procedures

For non-emergency personnel : No action shall be taken involving any personal risk or without suitable training. Evacuate surrounding areas. Keep unnecessary and unprotected personnel from entering. Do not touch or walk through spilled material. Shut off all ignition sources. No flares, smoking or flames in hazard area. Avoid breathing vapor or mist. Provide adequate ventilation. Wear appropriate respirator when ventilation is inadequate. Put on appropriate personal protective equipment.

For emergency responders : If specialized clothing is required to deal with the spillage, take note of any information in Section 8 on suitable and unsuitable materials. See also the information in "For non-emergency personnel".

Environmental precautions : Avoid dispersal of spilled material and runoff and contact with soil, waterways, drains and sewers. Inform the relevant authorities if the product has caused environmental pollution (sewers, waterways, soil or air).

Methods and materials for containment and cleaning up

Small spill : Stop leak if without risk. Move containers from spill area. Use spark-proof tools and explosion-proof equipment. Dilute with water and mop up if water-soluble. Alternatively, or if water-insoluble, absorb with an inert dry material and place in an appropriate waste disposal container. Dispose of via a licensed waste disposal contractor.

Large spill : Stop leak if without risk. Move containers from spill area. Use spark-proof tools and explosion-proof equipment. Approach release from upwind. Prevent entry into sewers, water courses, basements or confined areas. Wash spillages into an effluent treatment plant or proceed as follows. Contain and collect spillage with non-combustible, absorbent material e.g. sand, earth, vermiculite or diatomaceous earth and place in container for disposal according to local regulations (see Section 13). Dispose of via a licensed waste disposal contractor. Contaminated absorbent material may pose the same hazard as the spilled product. Note: see Section 1 for emergency contact information and Section 13 for waste disposal.

Section 7. Handling and storage

Precautions for safe handling

Protective measures : Put on appropriate personal protective equipment (see Section 8). Avoid exposure - obtain special instructions before use. Avoid exposure during pregnancy. Do not handle until all safety precautions have been read and understood. Do not get in eyes or on skin or clothing. Do not breathe vapor or mist. Do not swallow. Use only with adequate ventilation. Wear appropriate respirator when ventilation is inadequate. Do not enter storage areas and confined spaces unless adequately ventilated. Keep in the original container or an approved alternative made from a compatible material, kept tightly closed when not in use. Store and use away from heat, sparks, open flame or any other ignition source. Use explosion-proof electrical (ventilating, lighting and material handling) equipment. Use only non-sparking tools. Take precautionary measures against electrostatic discharges. Empty containers retain product residue and can be hazardous. Do not reuse container.

Section 7. Handling and storage

Advice on general occupational hygiene : Eating, drinking and smoking should be prohibited in areas where this material is handled, stored and processed. Workers should wash hands and face before eating, drinking and smoking. Remove contaminated clothing and protective equipment before entering eating areas. See also Section 8 for additional information on hygiene measures.

Conditions for safe storage, including any incompatibilities : Store in accordance with local regulations. Store in a segregated and approved area. Store in original container protected from direct sunlight in a dry, cool and well-ventilated area, away from incompatible materials (see Section 10) and food and drink. Store locked up. Eliminate all ignition sources. Separate from oxidizing materials. Keep container tightly closed and sealed until ready for use. Containers that have been opened must be carefully resealed and kept upright to prevent leakage. Do not store in unlabeled containers. Use appropriate containment to avoid environmental contamination. See Section 10 for incompatible materials before handling or use.

Section 8. Exposure controls/personal protection

Control parameters

Occupational exposure limits (OSHA United States)

Ingredient name	Exposure limits
Calcium Carbonate	**NIOSH REL (United States, 10/2016).** TWA: 5 mg/m³ 10 hours. Form: Respirable fraction TWA: 10 mg/m³ 10 hours. Form: Total
Xylene	**ACGIH TLV (United States, 3/2016).** TWA: 100 ppm 8 hours. TWA: 434 mg/m³ 8 hours. STEL: 150 ppm 15 minutes. STEL: 651 mg/m³ 15 minutes. **OSHA PEL (United States, 6/2016).** TWA: 100 ppm 8 hours. TWA: 435 mg/m³ 8 hours.
Titanium Dioxide	**ACGIH TLV (United States, 3/2016).** TWA: 10 mg/m³ 8 hours. **OSHA PEL (United States, 6/2016).** TWA: 15 mg/m³ 8 hours. Form: Total dust
Talc	**NIOSH REL (United States, 10/2016).** TWA: 2 mg/m³ 10 hours. Form: Respirable fraction **ACGIH TLV (United States, 3/2016).** TWA: 2 mg/m³ 8 hours. Form: Respirable fraction
1,2,4-Trimethylbenzene	**ACGIH TLV (United States, 3/2016).** TWA: 25 ppm 8 hours. TWA: 123 mg/m³ 8 hours. **NIOSH REL (United States, 10/2016).** TWA: 25 ppm 10 hours. TWA: 125 mg/m³ 10 hours.
Toluene	**OSHA PEL Z2 (United States, 2/2013).** TWA: 200 ppm 8 hours. CEIL: 300 ppm AMP: 500 ppm 10 minutes. **NIOSH REL (United States, 10/2016).** TWA: 100 ppm 10 hours. TWA: 375 mg/m³ 10 hours. STEL: 150 ppm 15 minutes. STEL: 560 mg/m³ 15 minutes. **ACGIH TLV (United States, 3/2016).**

Section 8. Exposure controls/personal protection

	TWA: 20 ppm 8 hours.
Light Aromatic Hydrocarbons	None.
Ethylbenzene	**ACGIH TLV (United States, 3/2016).** TWA: 20 ppm 8 hours. **NIOSH REL (United States, 10/2016).** TWA: 100 ppm 10 hours. TWA: 435 mg/m³ 10 hours. STEL: 125 ppm 15 minutes. STEL: 545 mg/m³ 15 minutes. **OSHA PEL (United States, 6/2016).** TWA: 100 ppm 8 hours. TWA: 435 mg/m³ 8 hours.
Cumene	**ACGIH TLV (United States, 3/2016).** TWA: 50 ppm 8 hours. **NIOSH REL (United States, 10/2016).** **Absorbed through skin.** TWA: 50 ppm 10 hours. TWA: 245 mg/m³ 10 hours. **OSHA PEL (United States, 6/2016).** **Absorbed through skin.** TWA: 50 ppm 8 hours. TWA: 245 mg/m³ 8 hours.
Crystalline Silica, respirable powder	**OSHA PEL Z3 (United States, 6/2016).** TWA: 250 mppcf / (%SiO2+5) 8 hours. Form: Respirable TWA: 10 mg/m³ / (%SiO2+2) 8 hours. Form: Respirable **OSHA PEL (United States, 6/2016).** TWA: 50 µg/m³ 8 hours. Form: Respirable dust **ACGIH TLV (United States, 3/2016).** TWA: 0.025 mg/m³ 8 hours. Form: Respirable fraction **NIOSH REL (United States, 10/2016).** TWA: 0.05 mg/m³ 10 hours. Form: respirable dust
Methyl Isobutyl Ketone	**ACGIH TLV (United States, 3/2016).** TWA: 20 ppm 8 hours. STEL: 75 ppm 15 minutes. **NIOSH REL (United States, 10/2016).** TWA: 50 ppm 10 hours. TWA: 205 mg/m³ 10 hours. STEL: 75 ppm 15 minutes. STEL: 300 mg/m³ 15 minutes. **OSHA PEL (United States, 6/2016).** TWA: 100 ppm 8 hours. TWA: 410 mg/m³ 8 hours.

Occupational exposure limits (Canada)

Ingredient name	Exposure limits
Xylene	**CA Alberta Provincial (Canada, 4/2009).** 8 hrs OEL: 100 ppm 8 hours. 15 min OEL: 651 mg/m³ 15 minutes. 15 min OEL: 150 ppm 15 minutes. 8 hrs OEL: 434 mg/m³ 8 hours. **CA British Columbia Provincial (Canada, 7/2016).**

	TWA: 100 ppm 8 hours. STEL: 150 ppm 15 minutes. **CA Québec Provincial (Canada, 1/2014).** TWAEV: 100 ppm 8 hours. TWAEV: 434 mg/m³ 8 hours. STEV: 150 ppm 15 minutes. STEV: 651 mg/m³ 15 minutes. **CA Ontario Provincial (Canada, 7/2015).** STEL: 150 ppm 15 minutes. TWA: 100 ppm 8 hours. **CA Saskatchewan Provincial (Canada, 7/2013).** STEL: 150 ppm 15 minutes. TWA: 100 ppm 8 hours.
1,2,4-Trimethylbenzene	**CA Alberta Provincial (Canada, 4/2009).** 8 hrs OEL: 123 mg/m³ 8 hours. 8 hrs OEL: 25 ppm 8 hours. **CA British Columbia Provincial (Canada, 7/2016).** TWA: 25 ppm 8 hours. **CA Québec Provincial (Canada, 1/2014).** TWAEV: 25 ppm 8 hours. TWAEV: 123 mg/m³ 8 hours. **CA Ontario Provincial (Canada, 7/2015).** TWA: 25 ppm 8 hours. **CA Saskatchewan Provincial (Canada, 7/2013).** STEL: 30 ppm 15 minutes. TWA: 25 ppm 8 hours.
toluene	**CA Alberta Provincial (Canada, 4/2009). Absorbed through skin.** 8 hrs OEL: 50 ppm 8 hours. 8 hrs OEL: 188 mg/m³ 8 hours. **CA British Columbia Provincial (Canada, 7/2016).** TWA: 20 ppm 8 hours. **CA Ontario Provincial (Canada, 7/2015).** TWA: 20 ppm 8 hours. **CA Québec Provincial (Canada, 1/2014). Absorbed through skin.** TWAEV: 50 ppm 8 hours. TWAEV: 188 mg/m³ 8 hours. **CA Saskatchewan Provincial (Canada, 7/2013). Absorbed through skin.** STEL: 60 ppm 15 minutes. TWA: 50 ppm 8 hours.
Ethylbenzene	**CA Alberta Provincial (Canada, 4/2009).** 8 hrs OEL: 100 ppm 8 hours. 8 hrs OEL: 434 mg/m³ 8 hours. 15 min OEL: 543 mg/m³ 15 minutes. 15 min OEL: 125 ppm 15 minutes. **CA British Columbia Provincial (Canada, 7/2016).** TWA: 20 ppm 8 hours. **CA Ontario Provincial (Canada, 7/2015).** TWA: 20 ppm 8 hours. **CA Québec Provincial (Canada, 1/2014).** TWAEV: 100 ppm 8 hours. TWAEV: 434 mg/m³ 8 hours.

	STEV: 125 ppm 15 minutes. STEV: 543 mg/m³ 15 minutes. **CA Saskatchewan Provincial (Canada, 7/2013).** STEL: 125 ppm 15 minutes. TWA: 100 ppm 8 hours.

Occupational exposure limits (Mexico)

Ingredient name	Exposure limits
Xylene	**NOM-010-STPS-2014 (Mexico, 4/2016).** STEL: 150 ppm 15 minutes. TWA: 100 ppm 8 hours.
1,2,4-Trimethylbenzene	**NOM-010-STPS-2014 (Mexico, 4/2016).** TWA: 25 ppm 8 hours.
toluene	**NOM-010-STPS-2014 (Mexico, 4/2016).** TWA: 20 ppm 8 hours.
Ethylbenzene	**NOM-010-STPS-2014 (Mexico, 4/2016).** TWA: 20 ppm 8 hours.

Appropriate engineering controls : Use only with adequate ventilation. Use process enclosures, local exhaust ventilation or other engineering controls to keep worker exposure to airborne contaminants below any recommended or statutory limits. The engineering controls also need to keep gas, vapor or dust concentrations below any lower explosive limits. Use explosion-proof ventilation equipment.

Environmental exposure controls : Emissions from ventilation or work process equipment should be checked to ensure they comply with the requirements of environmental protection legislation. In some cases, fume scrubbers, filters or engineering modifications to the process equipment will be necessary to reduce emissions to acceptable levels.

Individual protection measures

Hygiene measures : Wash hands, forearms and face thoroughly after handling chemical products, before eating, smoking and using the lavatory and at the end of the working period. Appropriate techniques should be used to remove potentially contaminated clothing. Wash contaminated clothing before reusing. Ensure that eyewash stations and safety showers are close to the workstation location.

Eye/face protection : Safety eyewear complying with an approved standard should be used when a risk assessment indicates this is necessary to avoid exposure to liquid splashes, mists, gases or dusts. If contact is possible, the following protection should be worn, unless the assessment indicates a higher degree of protection: chemical splash goggles.

Skin protection

Hand protection : Chemical-resistant, impervious gloves complying with an approved standard should be worn at all times when handling chemical products if a risk assessment indicates this is necessary. Considering the parameters specified by the glove manufacturer, check during use that the gloves are still retaining their protective properties. It should be noted that the time to breakthrough for any glove material may be different for different glove manufacturers. In the case of mixtures, consisting of several substances, the protection time of the gloves cannot be accurately estimated.

Body protection : Personal protective equipment for the body should be selected based on the task being performed and the risks involved and should be approved by a specialist before handling this product. When there is a risk of ignition from static electricity, wear anti-static protective clothing. For the greatest protection from static discharges, clothing should include anti-static overalls, boots and gloves.

Other skin protection : Appropriate footwear and any additional skin protection measures should be selected based on the task being performed and the risks involved and should be approved by a specialist before handling this product.

Section 8. Exposure controls/personal protection

Respiratory protection : Based on the hazard and potential for exposure, select a respirator that meets the appropriate standard or certification. Respirators must be used according to a respiratory protection program to ensure proper fitting, training, and other important aspects of use.

Section 9. Physical and chemical properties

Appearance

Physical state : Liquid.

Color : Not available.

Odor : Not available.

Odor threshold : Not available.

pH : Not available.

Melting point : Not available.

Boiling point : 105°C (221°F)

Flash point : Closed cup: 27°C (80.6°F) [Pensky-Martens Closed Cup]

Evaporation rate : 2 (butyl acetate = 1)

Flammability (solid, gas) : Not available.

Lower and upper explosive (flammable) limits : Lower: 0.7%
Upper: 7%

Vapor pressure : 2.9 kPa (22 mm Hg) [at 20°C]

Vapor density : 3.1 [Air = 1]

Relative density : 1.54

Solubility : Not available.

Partition coefficient: n-octanol/water : Not available.

Auto-ignition temperature : Not available.

Decomposition temperature : Not available.

Viscosity : Kinematic (40°C (104°F)): <0.205 cm^2/s (<20.5 cSt)

Molecular weight : Not applicable.

Aerosol product

Heat of combustion : 9.344 kJ/g

Section 10. Stability and reactivity

Reactivity : No specific test data related to reactivity available for this product or its ingredients.

Chemical stability : The product is stable.

Possibility of hazardous reactions : Under normal conditions of storage and use, hazardous reactions will not occur.

Conditions to avoid : Avoid all possible sources of ignition (spark or flame). Do not pressurize, cut, weld, braze, solder, drill, grind or expose containers to heat or sources of ignition. Do not allow vapor to accumulate in low or confined areas.

Incompatible materials : Reactive or incompatible with the following materials:
oxidizing materials

Hazardous decomposition products : Under normal conditions of storage and use, hazardous decomposition products should not be produced.

Section 11. Toxicological information

Information on toxicological effects

Acute toxicity

Product/ingredient name	Result	Species	Dose	Exposure
Calcium Carbonate	LD50 Oral	Rat	6450 mg/kg	-
Xylene	LC50 Inhalation Gas.	Rat	5000 ppm	4 hours
	LD50 Oral	Rat	4300 mg/kg	-
1,2,4-Trimethylbenzene	LC50 Inhalation Vapor	Rat	18000 mg/m³	4 hours
	LD50 Oral	Rat	5 g/kg	-
Toluene	LC50 Inhalation Vapor	Rat	49 g/m³	4 hours
	LD50 Oral	Rat	636 mg/kg	-
Light Aromatic Hydrocarbons	LD50 Oral	Rat	8400 mg/kg	-
Ethylbenzene	LD50 Dermal	Rabbit	>5000 mg/kg	-
	LD50 Oral	Rat	3500 mg/kg	-
Cumene	LC50 Inhalation Vapor	Rat	39000 mg/m³	4 hours
	LD50 Oral	Rat	1400 mg/kg	-
Methyl Isobutyl Ketone	LD50 Oral	Rat	2080 mg/kg	-

Irritation/Corrosion

Product/ingredient name	Result	Species	Score	Exposure	Observation
Calcium Carbonate	Eyes - Severe irritant	Rabbit	-	24 hours 750 Micrograms	-
	Skin - Moderate irritant	Rabbit	-	24 hours 500 milligrams	-
Xylene	Eyes - Mild irritant	Rabbit	-	87 milligrams	-
	Eyes - Severe irritant	Rabbit	-	24 hours 5 milligrams	-
	Skin - Mild irritant	Rat	-	8 hours 60 microliters	-
	Skin - Moderate irritant	Rabbit	-	24 hours 500 milligrams	-
	Skin - Moderate irritant	Rabbit	-	100 Percent	-
Titanium Dioxide	Skin - Mild irritant	Human	-	72 hours 300 Micrograms Intermittent	-
Talc	Skin - Mild irritant	Human	-	72 hours 300 Micrograms Intermittent	-
Toluene	Eyes - Mild irritant	Rabbit	-	0.5 minutes 100 milligrams	-
	Eyes - Mild irritant	Rabbit	-	870 Micrograms	-
	Eyes - Severe irritant	Rabbit	-	24 hours 2 milligrams	-
	Skin - Mild irritant	Pig	-	24 hours 250 microliters	-
	Skin - Mild irritant	Rabbit	-	435 milligrams	-
	Skin - Moderate irritant	Rabbit	-	24 hours 20 milligrams	-
	Skin - Moderate irritant	Rabbit	-	500 milligrams	-
Light Aromatic Hydrocarbons	Eyes - Mild irritant	Rabbit	-	24 hours 100 microliters	-
Ethylbenzene	Eyes - Severe irritant	Rabbit	-	500 milligrams	-
	Skin - Mild irritant	Rabbit	-	24 hours 15 milligrams	-

Cumene	Eyes - Mild irritant	Rabbit	-	24 hours 500 milligrams	-
	Eyes - Mild irritant	Rabbit	-	86 milligrams	-
	Skin - Mild irritant	Rabbit	-	24 hours 10 milligrams	-
	Skin - Moderate irritant	Rabbit	-	24 hours 100 milligrams	-
Methyl Isobutyl Ketone	Eyes - Moderate irritant	Rabbit	-	24 hours 100 microliters	-
	Eyes - Severe irritant	Rabbit	-	40 milligrams	-
	Skin - Mild irritant	Rabbit	-	24 hours 500 milligrams	-

Sensitization

Not available.

Mutagenicity

Not available.

Carcinogenicity

Not available.

Classification

Product/ingredient name	OSHA	IARC	NTP
Xylene	-	3	-
Titanium Dioxide	-	2B	-
Talc	-	3	-
Toluene	-	3	-
Ethylbenzene	-	2B	-
Cumene	-	2B	Reasonably anticipated to be a human carcinogen.
Crystalline Silica, respirable powder	-	1	Known to be a human carcinogen.
Methyl Isobutyl Ketone	-	2B	-

Reproductive toxicity

Not available.

Teratogenicity

Not available.

Specific target organ toxicity (single exposure)

Name	Category	Route of exposure	Target organs
Xylene	Category 3	Not applicable.	Respiratory tract irritation
1,2,4-Trimethylbenzene	Category 3	Not applicable.	Respiratory tract irritation
Toluene	Category 3	Not applicable.	Respiratory tract irritation and Narcotic effects
Light Aromatic Hydrocarbons	Category 3	Not applicable.	Respiratory tract irritation and Narcotic effects
Ethylbenzene	Category 3	Not applicable.	Respiratory tract irritation and Narcotic effects
Cumene	Category 3	Not applicable.	Respiratory tract irritation and Narcotic effects

Methyl Isobutyl Ketone	Category 3	Not applicable.	Respiratory tract irritation and Narcotic effects

Specific target organ toxicity (repeated exposure)

Name	Category	Route of exposure	Target organs
Xylene	Category 2	Not determined	Not determined
Talc	Category 1	Inhalation	lungs
Toluene	Category 2	Not determined	Not determined
Light Aromatic Hydrocarbons	Category 2	Not determined	Not determined
Ethylbenzene	Category 2	Not determined	Not determined
Cumene	Category 2	Not determined	Not determined
Crystalline Silica, respirable powder	Category 1	Inhalation	Not determined
Methyl Isobutyl Ketone	Category 2	Not determined	Not determined

Aspiration hazard

Name	Result
Xylene	ASPIRATION HAZARD - Category 1
1,2,4-Trimethylbenzene	ASPIRATION HAZARD - Category 1
Toluene	ASPIRATION HAZARD - Category 1
Light Aromatic Hydrocarbons	ASPIRATION HAZARD - Category 1
Ethylbenzene	ASPIRATION HAZARD - Category 1
Cumene	ASPIRATION HAZARD - Category 1

Information on the likely routes of exposure : Not available.

Potential acute health effects

Eye contact : Causes serious eye irritation.

Inhalation : May cause respiratory irritation.

Skin contact : Causes skin irritation.

Ingestion : May be fatal if swallowed and enters airways.

Symptoms related to the physical, chemical and toxicological characteristics

Eye contact : Adverse symptoms may include the following:
pain or irritation
watering
redness

Inhalation : Adverse symptoms may include the following:
respiratory tract irritation
coughing
reduced fetal weight
increase in fetal deaths
skeletal malformations

Skin contact : Adverse symptoms may include the following:
irritation
redness
reduced fetal weight
increase in fetal deaths
skeletal malformations

Ingestion : Adverse symptoms may include the following:
nausea or vomiting
reduced fetal weight
increase in fetal deaths
skeletal malformations

Delayed and immediate effects and also chronic effects from short and long term exposure

Short term exposure

Potential immediate effects : Not available.

Potential delayed effects : Not available.

Long term exposure

Potential immediate effects : Not available.

Potential delayed effects : Not available.

Potential chronic health effects

Not available.

General : Causes damage to organs through prolonged or repeated exposure.

Carcinogenicity : May cause cancer. Risk of cancer depends on duration and level of exposure.

Mutagenicity : No known significant effects or critical hazards.

Teratogenicity : Suspected of damaging the unborn child.

Developmental effects : No known significant effects or critical hazards.

Fertility effects : No known significant effects or critical hazards.

Numerical measures of toxicity

Acute toxicity estimates

Route	ATE value
Oral	10161.2 mg/kg
Dermal	8291.3 mg/kg
Inhalation (gases)	40976.4 ppm
Inhalation (vapors)	229.2 mg/l

Section 12. Ecological information

Toxicity

Product/ingredient name	Result	Species	Exposure
Calcium Carbonate	Acute LC50 >56000 ppm Fresh water	Fish - Gambusia affinis - Adult	96 hours
	Chronic NOEC 61 mg/g Fresh water	Fish - Oncorhynchus mykiss - Juvenile (Fledgling, Hatchling, Weanling)	28 days
Xylene	Acute LC50 8500 µg/l Marine water	Crustaceans - Palaemonetes pugio	48 hours
	Acute LC50 13400 µg/l Fresh water	Fish - Pimephales promelas	96 hours
Titanium Dioxide	Acute LC50 >1000000 µg/l Marine water	Fish - Fundulus heteroclitus	96 hours
1,2,4-Trimethylbenzene	Acute LC50 4910 µg/l Marine water	Crustaceans - Elasmopus pectenicrus - Adult	48 hours
	Acute LC50 7720 µg/l Fresh water	Fish - Pimephales promelas	96 hours
Toluene	Acute EC50 12500 µg/l Fresh water	Algae - Pseudokirchneriella subcapitata	72 hours
	Acute EC50 11600 µg/l Fresh water	Crustaceans - Gammarus pseudolimnaeus - Adult	48 hours
	Acute EC50 6000 µg/l Fresh water	Daphnia - Daphnia magna - Juvenile (Fledgling, Hatchling, Weanling)	48 hours
	Acute LC50 5500 µg/l Fresh water	Fish - Oncorhynchus kisutch - Fry	96 hours
	Chronic NOEC 1000 µg/l Fresh water	Daphnia - Daphnia magna	21 days
Ethylbenzene	Acute EC50 4600 µg/l Fresh water	Algae - Pseudokirchneriella subcapitata	72 hours

Section 12. Ecological information

	Acute EC50 3600 µg/l Fresh water	Algae - Pseudokirchneriella subcapitata	96 hours
	Acute EC50 6530 µg/l Fresh water	Crustaceans - Artemia sp. - Nauplii	48 hours
	Acute EC50 2930 µg/l Fresh water	Daphnia - Daphnia magna - Neonate	48 hours
	Acute LC50 4200 µg/l Fresh water	Fish - Oncorhynchus mykiss	96 hours
Cumene	Acute EC50 2600 µg/l Fresh water	Algae - Pseudokirchneriella subcapitata	72 hours
	Acute EC50 7400 µg/l Fresh water	Crustaceans - Artemia sp. - Nauplii	48 hours
	Acute EC50 10600 µg/l Fresh water	Daphnia - Daphnia magna - Neonate	48 hours
	Acute LC50 2700 µg/l Fresh water	Fish - Oncorhynchus mykiss	96 hours
Methyl Isobutyl Ketone	Acute LC50 505000 µg/l Fresh water	Fish - Pimephales promelas	96 hours
	Chronic NOEC 78 mg/l Fresh water	Daphnia - Daphnia magna	21 days
	Chronic NOEC 168 mg/l Fresh water	Fish - Pimephales promelas - Embryo	33 days

Persistence and degradability

Product/ingredient name	Aquatic half-life	Photolysis	Biodegradability
Xylene	-	-	Readily
Toluene	-	-	Readily
Light Aromatic Hydrocarbons	-	-	Readily
Ethylbenzene	-	-	Readily
Methyl Isobutyl Ketone	-	-	Readily

Bioaccumulative potential

Product/ingredient name	$LogP_{ow}$	BCF	Potential
Xylene	-	8.1 to 25.9	low
1,2,4-Trimethylbenzene	-	243	low
Toluene	-	90	low
Light Aromatic Hydrocarbons	-	10 to 2500	high
Cumene	-	35.48	low

Mobility in soil

Soil/water partition coefficient (K_{OC}) : Not available.

Other adverse effects : No known significant effects or critical hazards.

Section 13. Disposal considerations

Disposal methods : The generation of waste should be avoided or minimized wherever possible. Disposal of this product, solutions and any by-products should at all times comply with the requirements of environmental protection and waste disposal legislation and any regional local authority requirements. Dispose of surplus and non-recyclable products via a licensed waste disposal contractor. Waste should not be disposed of untreated to the sewer unless fully compliant with the requirements of all authorities with jurisdiction. Waste packaging should be recycled. Incineration or landfill should only be considered when recycling is not feasible. This material and its container must be disposed of in a safe way. Care should be taken when handling emptied containers that have not been cleaned or rinsed out. Empty containers or liners may retain some product residues. Vapor from product residues may create a highly flammable or explosive atmosphere inside the container. Do not cut, weld or grind used containers unless they have been

Section 13. Disposal considerations

cleaned thoroughly internally. Avoid dispersal of spilled material and runoff and contact with soil, waterways, drains and sewers.

Section 14. Transport information

	DOT Classification	TDG Classification	Mexico Classification	IATA	IMDG
UN number	UN1263	UN1263	UN1263	UN1263	UN1263
UN proper shipping name	PAINT	PAINT	PAINT	PAINT	PAINT
Transport hazard class(es)	3	3	3	3	3
Packing group	III	III	III	III	III
Environmental hazards	No.	No.	No.	No.	No.
Additional information	- **ERG No.** 128	Product classified as per the following sections of the Transportation of Dangerous Goods Regulations: 2. 18-2.19 (Class 3). **ERG No.** 128	- **ERG No.** 128	-	**Emergency schedules** F-E, S-E

Special precautions for user : Multi-modal shipping descriptions are provided for informational purposes and do not consider container sizes. The presence of a shipping description for a particular mode of transport (sea, air, etc.), does not indicate that the product is packaged suitably for that mode of transport. All packaging must be reviewed for suitability prior to shipment, and compliance with the applicable regulations is the sole responsibility of the person offering the product for transport. People loading and unloading dangerous goods must be trained on all of the risks deriving from the substances and on all actions in case of emergency situations.

Transport in bulk according to Annex II of MARPOL and the IBC Code : Not available.

Proper shipping name : Not available.

Ship type : Not available.

Pollution category : Not available.

Section 15. Regulatory information

SARA 313

SARA 313 (40 CFR 372.45) supplier notification can be found on the Environmental Data Sheet.

California Prop. 65

WARNING: This product contains chemicals known to the State of California to cause cancer and birth defects or other reproductive harm.

Section 16. Other information

Hazardous Material Information System (U.S.A.)

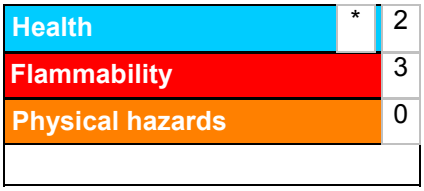

The customer is responsible for determining the PPE code for this material. For more information on HMIS® Personal Protective Equipment (PPE) codes, consult the HMIS® Implementation Manual.

Caution: HMIS® ratings are based on a 0-4 rating scale, with 0 representing minimal hazards or risks, and 4 representing significant hazards or risks. Although HMIS® ratings and the associated label are not required on SDSs or products leaving a facility under 29 CFR 1910.1200, the preparer may choose to provide them. HMIS® ratings are to be used with a fully implemented HMIS® program. HMIS® is a registered trademark and service mark of the American Coatings Association, Inc.

Procedure used to derive the classification

Classification	Justification
FLAMMABLE LIQUIDS - Category 3	On basis of test data
SKIN CORROSION/IRRITATION - Category 2	Calculation method
SERIOUS EYE DAMAGE/ EYE IRRITATION - Category 2A	Calculation method
CARCINOGENICITY - Category 1A	Calculation method
TOXIC TO REPRODUCTION (Unborn child) - Category 2	Calculation method
SPECIFIC TARGET ORGAN TOXICITY (SINGLE EXPOSURE) (Respiratory tract irritation) - Category 3	Calculation method
SPECIFIC TARGET ORGAN TOXICITY (REPEATED EXPOSURE) (lungs) - Category 1	Calculation method
ASPIRATION HAZARD - Category 1	Calculation method

History

Date of printing : 9/5/2017

Date of issue/Date of revision : 9/5/2017

Date of previous issue : 8/28/2017

Version : 8.02

Key to abbreviations : ATE = Acute Toxicity Estimate
BCF = Bioconcentration Factor
GHS = Globally Harmonized System of Classification and Labelling of Chemicals
IATA = International Air Transport Association
IBC = Intermediate Bulk Container
IMDG = International Maritime Dangerous Goods
LogPow = logarithm of the octanol/water partition coefficient
MARPOL = International Convention for the Prevention of Pollution From Ships, 1973 as modified by the Protocol of 1978. ("Marpol" = marine pollution)
UN = United Nations

Notice to reader

It is recommended that each customer or recipient of this Safety Data Sheet (SDS) study it carefully and consult resources, as necessary or appropriate, to become aware of and understand the data contained in this SDS and any hazards associated with the product. This information is provided in good faith and believed to be accurate as of the effective date herein. However, no warranty, express or implied, is given. The information presented here applies only to the product as shipped. The addition of any material can change the composition, hazards and risks of the product. Products shall not be repackaged, modified, or tinted except as specifically instructed by Sherwin-Williams, including but not limited to the incorporation of non Sherwin-Williams products or the use or addition of products in proportions not specified by Sherwin-Williams. Regulatory requirements are subject to change and may differ between various locations and jurisdictions. The customer/buyer/user is responsible to

Section 16. Other information

ensure that his activities comply with all country, federal, state, provincial or local laws. The conditions for use of the product are not under the control of the manufacturer; the customer/buyer/user is responsible to determine the conditions necessary for the safe use of this product. The customer/buyer/user should not use the product for any purpose other than the purpose shown in the applicable section of this SDS without first referring to the supplier and obtaining written handling instructions. Due to the proliferation of sources for information such as manufacturer-specific SDS, the manufacturer cannot be responsible for SDSs obtained from any other source.

SAFETY DATA SHEET

B56W311

Section 1. Identification

Product name : STEEL-MASTER™ 9500 30% Silicone Alkyd Enamel
Extra White

Product code : B56W311

Other means of identification : Not available.

Product type : Liquid.

Relevant identified uses of the substance or mixture and uses advised against

Not applicable.

Manufacturer : THE SHERWIN-WILLIAMS COMPANY
101 W. Prospect Avenue
Cleveland, OH 44115

Emergency telephone number of the company : US / Canada: (216) 566-2917
Mexico: SETIQ 01-800-00-214-00 / (52) 55-5559-1588 24 hours / 365 days a year

Product Information Telephone Number : US / Canada: (800) 524-5979
Mexico: Not Available

Regulatory Information Telephone Number : US / Canada: (216) 566-2902
Mexico: Not Available

Transportation Emergency Telephone Number : US / Canada: (800) 424-9300
Mexico: SETIQ 01-800-00-214-00 / (52) 55-5559-1588 24 hours / 365 days a year

Section 2. Hazards identification

OSHA/HCS status : This material is considered hazardous by the OSHA Hazard Communication Standard (29 CFR 1910.1200).

Classification of the substance or mixture : FLAMMABLE LIQUIDS - Category 3
SKIN CORROSION/IRRITATION - Category 2
SERIOUS EYE DAMAGE/ EYE IRRITATION - Category 2A
SKIN SENSITIZATION - Category 1
CARCINOGENICITY - Category 2
TOXIC TO REPRODUCTION (Fertility) - Category 2
TOXIC TO REPRODUCTION (Unborn child) - Category 2
SPECIFIC TARGET ORGAN TOXICITY (REPEATED EXPOSURE) - Category 2
ASPIRATION HAZARD - Category 1

Percentage of the mixture consisting of ingredient(s) of unknown oral toxicity: 21.3%
Percentage of the mixture consisting of ingredient(s) of unknown dermal toxicity: 38.4%
Percentage of the mixture consisting of ingredient(s) of unknown inhalation toxicity: 25.6%

GHS label elements

Hazard pictograms :

Signal word : Danger

Section 2. Hazards identification

Hazard statements : Flammable liquid and vapor.
Causes serious eye irritation.
Causes skin irritation.
May cause an allergic skin reaction.
Suspected of damaging fertility or the unborn child.
Suspected of causing cancer.
May be fatal if swallowed and enters airways.
May cause damage to organs through prolonged or repeated exposure.

Precautionary statements

Prevention : Obtain special instructions before use. Do not handle until all safety precautions have been read and understood. Wear protective gloves. Wear eye or face protection. Wear protective clothing. Keep away from heat, hot surfaces, sparks, open flames and other ignition sources. No smoking. Use explosion-proof electrical, ventilating, lighting and all material-handling equipment. Use only non-sparking tools. Take precautionary measures against static discharge. Keep container tightly closed. Do not breathe vapor. Wash hands thoroughly after handling. Contaminated work clothing must not be allowed out of the workplace.

Response : Get medical attention if you feel unwell. IF exposed or concerned: Get medical attention. IF SWALLOWED: Immediately call a POISON CENTER or physician. Do NOT induce vomiting. IF ON SKIN (or hair): Take off immediately all contaminated clothing. Rinse skin with water or shower. IF ON SKIN: Wash with plenty of soap and water. Wash contaminated clothing before reuse. If skin irritation or rash occurs: Get medical attention. IF IN EYES: Rinse cautiously with water for several minutes. Remove contact lenses, if present and easy to do. Continue rinsing. If eye irritation persists: Get medical attention.

Storage : Store locked up. Store in a well-ventilated place. Keep cool.

Disposal : Dispose of contents and container in accordance with all local, regional, national and international regulations.

Supplemental label elements

DELAYED EFFECTS FROM LONG TERM OVEREXPOSURE. Contains solvents which can cause permanent brain and nervous system damage. Intentional misuse by deliberately concentrating and inhaling the contents can be harmful or fatal. WARNING: This product contains chemicals known to the State of California to cause cancer and birth defects or other reproductive harm. FOR INDUSTRIAL USE ONLY.

Please refer to the SDS for additional information. Keep out of reach of children. Do not transfer contents to other containers for storage.

Hazards not otherwise classified : None known.

Section 3. Composition/information on ingredients

Substance/mixture : Mixture

Other means of identification : Not available.

CAS number/other identifiers

Ingredient name	% by weight	CAS number
Titanium Dioxide	19.25	13463-67-7
Aluminum Hydroxide	11.89	21645-51-2
1,2,4-Trimethylbenzene	7.86	95-63-6
1,3,5-Trimethylbenzene	4.91	108-67-8
Light Aromatic Hydrocarbons	4.33	64742-95-6
Mineral Spirits	2.04	64742-47-8
Xylene	1.12	1330-20-7
Cumene	0.98	98-82-8
Methyl Ethyl Ketoxime	0.42	96-29-7
Zirconium 2-Ethylhexanoate	0.38	22464-99-9
Ethylbenzene	0.33	100-41-4

Section 3. Composition/information on ingredients

Calcium 2-Ethylhexanoate	0.29	136-51-6

Any concentration shown as a range is to protect confidentiality or is due to batch variation.

There are no additional ingredients present which, within the current knowledge of the supplier and in the concentrations applicable, are classified as hazardous to health and hence require reporting in this section.

Occupational exposure limits, if available, are listed in Section 8.

Section 4. First aid measures

Description of necessary first aid measures

Eye contact : Immediately flush eyes with plenty of water, occasionally lifting the upper and lower eyelids. Check for and remove any contact lenses. Continue to rinse for at least 10 minutes. Get medical attention.

Inhalation : Remove victim to fresh air and keep at rest in a position comfortable for breathing. If not breathing, if breathing is irregular or if respiratory arrest occurs, provide artificial respiration or oxygen by trained personnel. It may be dangerous to the person providing aid to give mouth-to-mouth resuscitation. Get medical attention. If unconscious, place in recovery position and get medical attention immediately. Maintain an open airway. Loosen tight clothing such as a collar, tie, belt or waistband.

Skin contact : Wash with plenty of soap and water. Remove contaminated clothing and shoes. Wash contaminated clothing thoroughly with water before removing it, or wear gloves. Continue to rinse for at least 10 minutes. Get medical attention. In the event of any complaints or symptoms, avoid further exposure. Wash clothing before reuse. Clean shoes thoroughly before reuse.

Ingestion : Get medical attention immediately. Call a poison center or physician. Wash out mouth with water. Remove dentures if any. Remove victim to fresh air and keep at rest in a position comfortable for breathing. If material has been swallowed and the exposed person is conscious, give small quantities of water to drink. Stop if the exposed person feels sick as vomiting may be dangerous. Aspiration hazard if swallowed. Can enter lungs and cause damage. Do not induce vomiting. If vomiting occurs, the head should be kept low so that vomit does not enter the lungs. Never give anything by mouth to an unconscious person. If unconscious, place in recovery position and get medical attention immediately. Maintain an open airway. Loosen tight clothing such as a collar, tie, belt or waistband.

Most important symptoms/effects, acute and delayed

Potential acute health effects

Eye contact : Causes serious eye irritation.

Inhalation : No known significant effects or critical hazards.

Skin contact : Causes skin irritation. May cause an allergic skin reaction.

Ingestion : May be fatal if swallowed and enters airways.

Over-exposure signs/symptoms

Eye contact : Adverse symptoms may include the following:
pain or irritation
watering
redness

Inhalation : Adverse symptoms may include the following:
reduced fetal weight
increase in fetal deaths
skeletal malformations

Skin contact : Adverse symptoms may include the following:
irritation
redness
reduced fetal weight
increase in fetal deaths
skeletal malformations

Section 4. First aid measures

Ingestion : Adverse symptoms may include the following:
nausea or vomiting
reduced fetal weight
increase in fetal deaths
skeletal malformations

Indication of immediate medical attention and special treatment needed, if necessary

Notes to physician : Treat symptomatically. Contact poison treatment specialist immediately if large quantities have been ingested or inhaled.

Specific treatments : No specific treatment.

Protection of first-aiders : No action shall be taken involving any personal risk or without suitable training. It may be dangerous to the person providing aid to give mouth-to-mouth resuscitation. Wash contaminated clothing thoroughly with water before removing it, or wear gloves.

See toxicological information (Section 11)

Section 5. Fire-fighting measures

Extinguishing media

Suitable extinguishing media : Use dry chemical, CO_2, water spray (fog) or foam.

Unsuitable extinguishing media : Do not use water jet.

Specific hazards arising from the chemical : Flammable liquid and vapor. Runoff to sewer may create fire or explosion hazard. In a fire or if heated, a pressure increase will occur and the container may burst, with the risk of a subsequent explosion. The vapor/gas is heavier than air and will spread along the ground. Vapors may accumulate in low or confined areas or travel a considerable distance to a source of ignition and flash back.

Hazardous thermal decomposition products : Decomposition products may include the following materials:
carbon dioxide
carbon monoxide
metal oxide/oxides

Special protective actions for fire-fighters : Promptly isolate the scene by removing all persons from the vicinity of the incident if there is a fire. No action shall be taken involving any personal risk or without suitable training. Move containers from fire area if this can be done without risk. Use water spray to keep fire-exposed containers cool.

Special protective equipment for fire-fighters : Fire-fighters should wear appropriate protective equipment and self-contained breathing apparatus (SCBA) with a full face-piece operated in positive pressure mode.

Section 6. Accidental release measures

Personal precautions, protective equipment and emergency procedures

For non-emergency personnel : No action shall be taken involving any personal risk or without suitable training. Evacuate surrounding areas. Keep unnecessary and unprotected personnel from entering. Do not touch or walk through spilled material. Shut off all ignition sources. No flares, smoking or flames in hazard area. Avoid breathing vapor or mist. Provide adequate ventilation. Wear appropriate respirator when ventilation is inadequate. Put on appropriate personal protective equipment.

For emergency responders : If specialized clothing is required to deal with the spillage, take note of any information in Section 8 on suitable and unsuitable materials. See also the information in "For non-emergency personnel".

Environmental precautions :

Section 6. Accidental release measures

Avoid dispersal of spilled material and runoff and contact with soil, waterways, drains and sewers. Inform the relevant authorities if the product has caused environmental pollution (sewers, waterways, soil or air).

Methods and materials for containment and cleaning up

Small spill : Stop leak if without risk. Move containers from spill area. Use spark-proof tools and explosion-proof equipment. Dilute with water and mop up if water-soluble. Alternatively, or if water-insoluble, absorb with an inert dry material and place in an appropriate waste disposal container. Dispose of via a licensed waste disposal contractor.

Large spill : Stop leak if without risk. Move containers from spill area. Use spark-proof tools and explosion-proof equipment. Approach release from upwind. Prevent entry into sewers, water courses, basements or confined areas. Wash spillages into an effluent treatment plant or proceed as follows. Contain and collect spillage with non-combustible, absorbent material e.g. sand, earth, vermiculite or diatomaceous earth and place in container for disposal according to local regulations (see Section 13). Dispose of via a licensed waste disposal contractor. Contaminated absorbent material may pose the same hazard as the spilled product. Note: see Section 1 for emergency contact information and Section 13 for waste disposal.

Section 7. Handling and storage

Precautions for safe handling

Protective measures : Put on appropriate personal protective equipment (see Section 8). Persons with a history of skin sensitization problems should not be employed in any process in which this product is used. Avoid exposure - obtain special instructions before use. Avoid exposure during pregnancy. Do not handle until all safety precautions have been read and understood. Do not get in eyes or on skin or clothing. Do not breathe vapor or mist. Do not swallow. Use only with adequate ventilation. Wear appropriate respirator when ventilation is inadequate. Do not enter storage areas and confined spaces unless adequately ventilated. Keep in the original container or an approved alternative made from a compatible material, kept tightly closed when not in use. Store and use away from heat, sparks, open flame or any other ignition source. Use explosion-proof electrical (ventilating, lighting and material handling) equipment. Use only non-sparking tools. Take precautionary measures against electrostatic discharges. Empty containers retain product residue and can be hazardous. Do not reuse container.

Advice on general occupational hygiene : Eating, drinking and smoking should be prohibited in areas where this material is handled, stored and processed. Workers should wash hands and face before eating, drinking and smoking. Remove contaminated clothing and protective equipment before entering eating areas. See also Section 8 for additional information on hygiene measures.

Conditions for safe storage, including any incompatibilities : Store in accordance with local regulations. Store in a segregated and approved area. Store in original container protected from direct sunlight in a dry, cool and well-ventilated area, away from incompatible materials (see Section 10) and food and drink. Store locked up. Eliminate all ignition sources. Separate from oxidizing materials. Keep container tightly closed and sealed until ready for use. Containers that have been opened must be carefully resealed and kept upright to prevent leakage. Do not store in unlabeled containers. Use appropriate containment to avoid environmental contamination. See Section 10 for incompatible materials before handling or use.

Section 8. Exposure controls/personal protection

Control parameters

Occupational exposure limits (OSHA United States)

Section 8. Exposure controls/personal protection

Ingredient name	Exposure limits
Titanium Dioxide	**ACGIH TLV (United States, 3/2016).** TWA: 10 mg/m³ 8 hours. **OSHA PEL (United States, 6/2016).** TWA: 15 mg/m³ 8 hours. Form: Total dust
Aluminum Hydroxide	**ACGIH TLV (United States, 3/2016).** TWA: 1 mg/m³ 8 hours. Form: Respirable fraction
1,2,4-Trimethylbenzene	**ACGIH TLV (United States, 3/2016).** TWA: 25 ppm 8 hours. TWA: 123 mg/m³ 8 hours. **NIOSH REL (United States, 10/2016).** TWA: 25 ppm 10 hours. TWA: 125 mg/m³ 10 hours.
1,3,5-Trimethylbenzene	**ACGIH TLV (United States, 3/2016).** TWA: 25 ppm 8 hours. TWA: 123 mg/m³ 8 hours. **NIOSH REL (United States, 10/2016).** TWA: 25 ppm 10 hours. TWA: 125 mg/m³ 10 hours.
Light Aromatic Hydrocarbons	None.
Mineral Spirits	**OSHA PEL (United States, 6/2016).** TWA: 100 ppm 8 hours. TWA: 400 mg/m³ 8 hours.
Xylene	**ACGIH TLV (United States, 3/2016).** TWA: 100 ppm 8 hours. TWA: 434 mg/m³ 8 hours. STEL: 150 ppm 15 minutes. STEL: 651 mg/m³ 15 minutes. **OSHA PEL (United States, 6/2016).** TWA: 100 ppm 8 hours. TWA: 435 mg/m³ 8 hours.
Cumene	**ACGIH TLV (United States, 3/2016).** TWA: 50 ppm 8 hours. **NIOSH REL (United States, 10/2016).** **Absorbed through skin.** TWA: 50 ppm 10 hours. TWA: 245 mg/m³ 10 hours. **OSHA PEL (United States, 6/2016).** **Absorbed through skin.** TWA: 50 ppm 8 hours. TWA: 245 mg/m³ 8 hours.
Methyl Ethyl Ketoxime	**AIHA WEEL (United States, 10/2011). Skin sensitizer.** TWA: 10 ppm 8 hours.
Zirconium 2-Ethylhexanoate	**ACGIH TLV (United States, 3/2016).** TWA: 5 mg/m³, (as Zr) 8 hours. STEL: 10 mg/m³, (as Zr) 15 minutes. **NIOSH REL (United States, 10/2016).** TWA: 5 mg/m³, (as Zr) 10 hours. STEL: 10 mg/m³, (as Zr) 15 minutes. **OSHA PEL (United States, 6/2016).** TWA: 5 mg/m³, (as Zr) 8 hours.
Ethylbenzene	**ACGIH TLV (United States, 3/2016).** TWA: 20 ppm 8 hours. **NIOSH REL (United States, 10/2016).** TWA: 100 ppm 10 hours. TWA: 435 mg/m³ 10 hours.

	STEL: 125 ppm 15 minutes. STEL: 545 mg/m³ 15 minutes. **OSHA PEL (United States, 6/2016).** TWA: 100 ppm 8 hours. TWA: 435 mg/m³ 8 hours.
Calcium 2-Ethylhexanoate	None.

Occupational exposure limits (Canada)

Ingredient name	Exposure limits
1,2,4-Trimethylbenzene	**CA Alberta Provincial (Canada, 4/2009).** 8 hrs OEL: 123 mg/m³ 8 hours. 8 hrs OEL: 25 ppm 8 hours. **CA British Columbia Provincial (Canada, 7/2016).** TWA: 25 ppm 8 hours. **CA Québec Provincial (Canada, 1/2014).** TWAEV: 25 ppm 8 hours. TWAEV: 123 mg/m³ 8 hours. **CA Ontario Provincial (Canada, 7/2015).** TWA: 25 ppm 8 hours. **CA Saskatchewan Provincial (Canada, 7/2013).** STEL: 30 ppm 15 minutes. TWA: 25 ppm 8 hours.
1,3,5-Trimethylbenzene	**CA Alberta Provincial (Canada, 4/2009).** 8 hrs OEL: 123 mg/m³ 8 hours. 8 hrs OEL: 25 ppm 8 hours. **CA British Columbia Provincial (Canada, 7/2016).** TWA: 25 ppm 8 hours. **CA Québec Provincial (Canada, 1/2014).** TWAEV: 25 ppm 8 hours. TWAEV: 123 mg/m³ 8 hours. **CA Ontario Provincial (Canada, 7/2015).** TWA: 25 ppm 8 hours. **CA Saskatchewan Provincial (Canada, 7/2013).** STEL: 30 ppm 15 minutes. TWA: 25 ppm 8 hours.
Solvent naphtha (petroleum), medium aliph.	**CA Québec Provincial (Canada, 1/2014).** TWAEV: 400 ppm 8 hours. TWAEV: 1590 mg/m³ 8 hours. **CA Ontario Provincial (Canada, 7/2015).** TWA: 525 mg/m³ 8 hours.
Xylene	**CA Alberta Provincial (Canada, 4/2009).** 8 hrs OEL: 100 ppm 8 hours. 15 min OEL: 651 mg/m³ 15 minutes. 15 min OEL: 150 ppm 15 minutes. 8 hrs OEL: 434 mg/m³ 8 hours. **CA British Columbia Provincial (Canada, 7/2016).** TWA: 100 ppm 8 hours. STEL: 150 ppm 15 minutes. **CA Québec Provincial (Canada, 1/2014).** TWAEV: 100 ppm 8 hours. TWAEV: 434 mg/m³ 8 hours. STEV: 150 ppm 15 minutes. STEV: 651 mg/m³ 15 minutes.

	CA Ontario Provincial (Canada, 7/2015). STEL: 150 ppm 15 minutes. TWA: 100 ppm 8 hours. **CA Saskatchewan Provincial (Canada, 7/2013).** STEL: 150 ppm 15 minutes. TWA: 100 ppm 8 hours.
Methyl Ethyl Ketoxime	**AIHA WEEL (United States, 10/2011). Skin sensitizer.** TWA: 10 ppm 8 hours.
Zirconium 2-Ethylhexanoate	**CA Alberta Provincial (Canada, 4/2009).** 8 hrs OEL: 5 mg/m³, (as Zr) 8 hours. 15 min OEL: 10 mg/m³, (as Zr) 15 minutes. **CA British Columbia Provincial (Canada, 7/2016).** TWA: 5 mg/m³, (as Zr) 8 hours. STEL: 10 mg/m³, (as Zr) 15 minutes. **CA Québec Provincial (Canada, 1/2014).** TWAEV: 5 mg/m³, (as Zr) 8 hours. STEV: 10 mg/m³, (as Zr) 15 minutes. **CA Ontario Provincial (Canada, 7/2015).** STEL: 10 mg/m³, (as Zr) 15 minutes. TWA: 5 mg/m³, (as Zr) 8 hours.
Ethylbenzene	**CA Alberta Provincial (Canada, 4/2009).** 8 hrs OEL: 100 ppm 8 hours. 8 hrs OEL: 434 mg/m³ 8 hours. 15 min OEL: 543 mg/m³ 15 minutes. 15 min OEL: 125 ppm 15 minutes. **CA British Columbia Provincial (Canada, 7/2016).** TWA: 20 ppm 8 hours. **CA Ontario Provincial (Canada, 7/2015).** TWA: 20 ppm 8 hours. **CA Québec Provincial (Canada, 1/2014).** TWAEV: 100 ppm 8 hours. TWAEV: 434 mg/m³ 8 hours. STEV: 125 ppm 15 minutes. STEV: 543 mg/m³ 15 minutes. **CA Saskatchewan Provincial (Canada, 7/2013).** STEL: 125 ppm 15 minutes. TWA: 100 ppm 8 hours.

Occupational exposure limits (Mexico)

Ingredient name	Exposure limits
1,2,4-Trimethylbenzene	**NOM-010-STPS-2014 (Mexico, 4/2016).** TWA: 25 ppm 8 hours.
1,3,5-Trimethylbenzene	**NOM-010-STPS-2014 (Mexico, 4/2016).** TWA: 25 ppm 8 hours.
Xylene	**NOM-010-STPS-2014 (Mexico, 4/2016).** STEL: 150 ppm 15 minutes. TWA: 100 ppm 8 hours.
Zirconium 2-Ethylhexanoate	**NOM-010-STPS-2014 (Mexico, 4/2016).** TWA: 5 mg/m³, (as Zr) 8 hours. STEL: 10 mg/m³, (as Zr) 15 minutes.
Ethylbenzene	**NOM-010-STPS-2014 (Mexico, 4/2016).** TWA: 20 ppm 8 hours.

Section 8. Exposure controls/personal protection

Appropriate engineering controls : Use only with adequate ventilation. Use process enclosures, local exhaust ventilation or other engineering controls to keep worker exposure to airborne contaminants below any recommended or statutory limits. The engineering controls also need to keep gas, vapor or dust concentrations below any lower explosive limits. Use explosion-proof ventilation equipment.

Environmental exposure controls : Emissions from ventilation or work process equipment should be checked to ensure they comply with the requirements of environmental protection legislation. In some cases, fume scrubbers, filters or engineering modifications to the process equipment will be necessary to reduce emissions to acceptable levels.

Individual protection measures

Hygiene measures : Wash hands, forearms and face thoroughly after handling chemical products, before eating, smoking and using the lavatory and at the end of the working period. Appropriate techniques should be used to remove potentially contaminated clothing. Contaminated work clothing should not be allowed out of the workplace. Wash contaminated clothing before reusing. Ensure that eyewash stations and safety showers are close to the workstation location.

Eye/face protection : Safety eyewear complying with an approved standard should be used when a risk assessment indicates this is necessary to avoid exposure to liquid splashes, mists, gases or dusts. If contact is possible, the following protection should be worn, unless the assessment indicates a higher degree of protection: chemical splash goggles.

Skin protection

Hand protection : Chemical-resistant, impervious gloves complying with an approved standard should be worn at all times when handling chemical products if a risk assessment indicates this is necessary. Considering the parameters specified by the glove manufacturer, check during use that the gloves are still retaining their protective properties. It should be noted that the time to breakthrough for any glove material may be different for different glove manufacturers. In the case of mixtures, consisting of several substances, the protection time of the gloves cannot be accurately estimated.

Body protection : Personal protective equipment for the body should be selected based on the task being performed and the risks involved and should be approved by a specialist before handling this product. When there is a risk of ignition from static electricity, wear anti-static protective clothing. For the greatest protection from static discharges, clothing should include anti-static overalls, boots and gloves.

Other skin protection : Appropriate footwear and any additional skin protection measures should be selected based on the task being performed and the risks involved and should be approved by a specialist before handling this product.

Respiratory protection : Based on the hazard and potential for exposure, select a respirator that meets the appropriate standard or certification. Respirators must be used according to a respiratory protection program to ensure proper fitting, training, and other important aspects of use.

Section 9. Physical and chemical properties

Appearance

Physical state : Liquid.

Color : Not available.

Odor : Not available.

Odor threshold : Not available.

pH : Not available.

Melting point : Not available.

Boiling point : 138°C (280.4°F)

Flash point : Closed cup: 44°C (111.2°F) [Pensky-Martens Closed Cup]

Evaporation rate : 0.53 (butyl acetate = 1)

Section 9. Physical and chemical properties

Flammability (solid, gas) : Not available.

Lower and upper explosive (flammable) limits : Lower: 0.7%
Upper: 7%

Vapor pressure : 0.79 kPa (5.9 mm Hg) [at 20°C]

Vapor density : 3.66 [Air = 1]

Relative density : 1.3

Solubility : Not available.

Partition coefficient: n-octanol/water : Not available.

Auto-ignition temperature : Not available.

Decomposition temperature : Not available.

Viscosity : Kinematic (40°C (104°F)): <0.205 cm^2/s (<20.5 cSt)

Molecular weight : Not applicable.

Aerosol product

Heat of combustion : 9.494 kJ/g

Section 10. Stability and reactivity

Reactivity : No specific test data related to reactivity available for this product or its ingredients.

Chemical stability : The product is stable.

Possibility of hazardous reactions : Under normal conditions of storage and use, hazardous reactions will not occur.

Conditions to avoid : Avoid all possible sources of ignition (spark or flame). Do not pressurize, cut, weld, braze, solder, drill, grind or expose containers to heat or sources of ignition. Do not allow vapor to accumulate in low or confined areas.

Incompatible materials : Reactive or incompatible with the following materials:
oxidizing materials

Hazardous decomposition products : Under normal conditions of storage and use, hazardous decomposition products should not be produced.

Section 11. Toxicological information

Information on toxicological effects

Acute toxicity

Product/ingredient name	Result	Species	Dose	Exposure
1,2,4-Trimethylbenzene	LC50 Inhalation Vapor	Rat	18000 mg/m³	4 hours
	LD50 Oral	Rat	5 g/kg	-
1,3,5-Trimethylbenzene	LC50 Inhalation Vapor	Rat	24000 mg/m³	4 hours
	LD50 Oral	Rat	5000 mg/kg	-
Light Aromatic Hydrocarbons	LD50 Oral	Rat	8400 mg/kg	-
Xylene	LC50 Inhalation Gas.	Rat	5000 ppm	4 hours
	LD50 Oral	Rat	4300 mg/kg	-
Cumene	LC50 Inhalation Vapor	Rat	39000 mg/m³	4 hours
	LD50 Oral	Rat	1400 mg/kg	-
Methyl Ethyl Ketoxime	LD50 Oral	Rat	930 mg/kg	-
Zirconium 2-Ethylhexanoate	LD50 Dermal	Rabbit	>5 g/kg	-
	LD50 Oral	Rat	>5 g/kg	-
Ethylbenzene	LD50 Dermal	Rabbit	>5000 mg/kg	-

Section 11. Toxicological information

	LD50 Oral	Rat	3500 mg/kg	-

Irritation/Corrosion

Product/ingredient name	Result	Species	Score	Exposure	Observation
Titanium Dioxide	Skin - Mild irritant	Human	-	72 hours 300 Micrograms Intermittent	-
1,3,5-Trimethylbenzene	Eyes - Mild irritant	Rabbit	-	24 hours 500 milligrams	-
	Skin - Moderate irritant	Rabbit	-	24 hours 20 milligrams	-
Light Aromatic Hydrocarbons	Eyes - Mild irritant	Rabbit	-	24 hours 100 microliters	-
Xylene	Eyes - Mild irritant	Rabbit	-	87 milligrams	-
	Eyes - Severe irritant	Rabbit	-	24 hours 5 milligrams	-
	Skin - Mild irritant	Rat	-	8 hours 60 microliters	-
	Skin - Moderate irritant	Rabbit	-	24 hours 500 milligrams	-
	Skin - Moderate irritant	Rabbit	-	100 Percent	-
Cumene	Eyes - Mild irritant	Rabbit	-	24 hours 500 milligrams	-
	Eyes - Mild irritant	Rabbit	-	86 milligrams	-
	Skin - Mild irritant	Rabbit	-	24 hours 10 milligrams	-
	Skin - Moderate irritant	Rabbit	-	24 hours 100 milligrams	-
Methyl Ethyl Ketoxime	Eyes - Severe irritant	Rabbit	-	100 microliters	-
Ethylbenzene	Eyes - Severe irritant	Rabbit	-	500 milligrams	-
	Skin - Mild irritant	Rabbit	-	24 hours 15 milligrams	-

Sensitization

Not available.

Mutagenicity

Not available.

Carcinogenicity

Not available.

Classification

Product/ingredient name	OSHA	IARC	NTP
Titanium Dioxide	-	2B	-
Xylene	-	3	-
Cumene	-	2B	Reasonably anticipated to be a human carcinogen.
Ethylbenzene	-	2B	-

Reproductive toxicity

Not available.

Teratogenicity

Not available.

Specific target organ toxicity (single exposure)

Section 11. Toxicological information

Name	Category	Route of exposure	Target organs
1,2,4-Trimethylbenzene	Category 3	Not applicable.	Respiratory tract irritation
1,3,5-Trimethylbenzene	Category 3	Not applicable.	Respiratory tract irritation
Light Aromatic Hydrocarbons	Category 3	Not applicable.	Respiratory tract irritation and Narcotic effects
Mineral Spirits	Category 3	Not applicable.	Respiratory tract irritation and Narcotic effects
Xylene	Category 3	Not applicable.	Respiratory tract irritation
Cumene	Category 3	Not applicable.	Respiratory tract irritation and Narcotic effects
Ethylbenzene	Category 3	Not applicable.	Respiratory tract irritation and Narcotic effects

Specific target organ toxicity (repeated exposure)

Name	Category	Route of exposure	Target organs
Light Aromatic Hydrocarbons	Category 2	Not determined	Not determined
Mineral Spirits	Category 2	Not determined	Not determined
Xylene	Category 2	Not determined	Not determined
Cumene	Category 2	Not determined	Not determined
Ethylbenzene	Category 2	Not determined	Not determined

Aspiration hazard

Name	Result
1,2,4-Trimethylbenzene	ASPIRATION HAZARD - Category 1
1,3,5-Trimethylbenzene	ASPIRATION HAZARD - Category 1
Light Aromatic Hydrocarbons	ASPIRATION HAZARD - Category 1
Mineral Spirits	ASPIRATION HAZARD - Category 1
Xylene	ASPIRATION HAZARD - Category 1
Cumene	ASPIRATION HAZARD - Category 1
Ethylbenzene	ASPIRATION HAZARD - Category 1

Information on the likely routes of exposure : Not available.

Potential acute health effects

Eye contact : Causes serious eye irritation.

Inhalation : No known significant effects or critical hazards.

Skin contact : Causes skin irritation. May cause an allergic skin reaction.

Ingestion : May be fatal if swallowed and enters airways.

Symptoms related to the physical, chemical and toxicological characteristics

Eye contact : Adverse symptoms may include the following:
pain or irritation
watering
redness

Inhalation : Adverse symptoms may include the following:
reduced fetal weight
increase in fetal deaths
skeletal malformations

Skin contact : Adverse symptoms may include the following:
irritation
redness
reduced fetal weight
increase in fetal deaths
skeletal malformations

Ingestion : Adverse symptoms may include the following:
nausea or vomiting
reduced fetal weight
increase in fetal deaths
skeletal malformations

Delayed and immediate effects and also chronic effects from short and long term exposure

Short term exposure

Potential immediate effects : Not available.

Potential delayed effects : Not available.

Long term exposure

Potential immediate effects : Not available.

Potential delayed effects : Not available.

Potential chronic health effects

Not available.

General : May cause damage to organs through prolonged or repeated exposure. Once sensitized, a severe allergic reaction may occur when subsequently exposed to very low levels.

Carcinogenicity : Suspected of causing cancer. Risk of cancer depends on duration and level of exposure.

Mutagenicity : No known significant effects or critical hazards.

Teratogenicity : Suspected of damaging the unborn child.

Developmental effects : No known significant effects or critical hazards.

Fertility effects : Suspected of damaging fertility.

Numerical measures of toxicity

Acute toxicity estimates

Route	ATE value
Oral	27981.6 mg/kg
Dermal	60760.1 mg/kg
Inhalation (gases)	333419.5 ppm
Inhalation (vapors)	170.3 mg/l

Section 12. Ecological information

Toxicity

Product/ingredient name	Result	Species	Exposure
Titanium Dioxide	Acute LC50 >1000000 µg/l Marine water	Fish - Fundulus heteroclitus	96 hours
1,2,4-Trimethylbenzene	Acute LC50 4910 µg/l Marine water	Crustaceans - Elasmopus pectenicrus - Adult	48 hours
	Acute LC50 7720 µg/l Fresh water	Fish - Pimephales promelas	96 hours
1,3,5-Trimethylbenzene	Acute LC50 13000 µg/l Marine water	Crustaceans - Cancer magister - Zoea	48 hours
	Acute LC50 12520 µg/l Fresh water	Fish - Carassius auratus	96 hours
	Chronic NOEC 400 µg/l Fresh water	Daphnia - Daphnia magna	21 days
Xylene	Acute LC50 8500 µg/l Marine water	Crustaceans - Palaemonetes pugio	48 hours
	Acute LC50 13400 µg/l Fresh water	Fish - Pimephales promelas	96 hours
Cumene	Acute EC50 2600 µg/l Fresh water	Algae - Pseudokirchneriella subcapitata	72 hours
	Acute EC50 7400 µg/l Fresh water	Crustaceans - Artemia sp. - Nauplii	48 hours
	Acute EC50 10600 µg/l Fresh water	Daphnia - Daphnia magna - Neonate	48 hours
	Acute LC50 2700 µg/l Fresh water	Fish - Oncorhynchus mykiss	96 hours
Methyl Ethyl Ketoxime	Acute LC50 843000 µg/l Fresh water	Fish - Pimephales promelas	96 hours
Ethylbenzene	Acute EC50 4600 µg/l Fresh water	Algae - Pseudokirchneriella subcapitata	72 hours
	Acute EC50 3600 µg/l Fresh water	Algae - Pseudokirchneriella subcapitata	96 hours
	Acute EC50 6530 µg/l Fresh water	Crustaceans - Artemia sp. - Nauplii	48 hours
	Acute EC50 2930 µg/l Fresh water	Daphnia - Daphnia magna - Neonate	48 hours
	Acute LC50 4200 µg/l Fresh water	Fish - Oncorhynchus mykiss	96 hours

Persistence and degradability

Product/ingredient name	Aquatic half-life	Photolysis	Biodegradability
Light Aromatic Hydrocarbons	-	-	Readily
Xylene	-	-	Readily
Ethylbenzene	-	-	Readily

Bioaccumulative potential

Product/ingredient name	$LogP_{ow}$	BCF	Potential
1,2,4-Trimethylbenzene	-	243	low
1,3,5-Trimethylbenzene	-	161	low
Light Aromatic Hydrocarbons	-	10 to 2500	high
Xylene	-	8.1 to 25.9	low
Cumene	-	35.48	low
Methyl Ethyl Ketoxime	-	2.5 to 5.8	low
Zirconium 2-Ethylhexanoate	-	2.96	low
Calcium 2-Ethylhexanoate	-	2.96	low

Mobility in soil

Soil/water partition coefficient (K_{OC}) : Not available.

Other adverse effects : No known significant effects or critical hazards.

Section 13. Disposal considerations

Disposal methods : The generation of waste should be avoided or minimized wherever possible. Disposal of this product, solutions and any by-products should at all times comply with the requirements of environmental protection and waste disposal legislation and any regional local authority requirements. Dispose of surplus and non-recyclable products via a licensed waste disposal contractor. Waste should not be disposed of untreated to the sewer unless fully compliant with the requirements of all authorities with jurisdiction. Waste packaging should be recycled. Incineration or landfill should only be considered when recycling is not feasible. This material and its container must be disposed of in a safe way. Care should be taken when handling emptied containers that have not been cleaned or rinsed out. Empty containers or liners may retain some product residues. Vapor from product residues may create a highly flammable or explosive atmosphere inside the container. Do not cut, weld or grind used containers unless they have been cleaned thoroughly internally. Avoid dispersal of spilled material and runoff and contact with soil, waterways, drains and sewers.

Section 14. Transport information

	DOT Classification	TDG Classification	Mexico Classification	IATA	IMDG
UN number	UN1263	UN1263	UN1263	UN1263	UN1263
UN proper shipping name	PAINT	PAINT	PAINT	PAINT	PAINT
Transport hazard class(es)	3	3	3	3	3
Packing group	III	III	III	III	III
Environmental hazards	No.	No.	No.	No.	No.
Additional information	This product may be re-classified as "Combustible Liquid," unless transported by vessel or aircraft. Non-bulk packages (less than or equal to 119 gal) of combustible liquids are not regulated as hazardous materials in package sizes less than the product reportable quantity. **ERG No.** 128	Product classified as per the following sections of the Transportation of Dangerous Goods Regulations: 2. 18-2.19 (Class 3). **ERG No.** 128	- **ERG No.** 128	-	**Emergency schedules** F-E, S-E

Section 14. Transport information

Special precautions for user : Multi-modal shipping descriptions are provided for informational purposes and do not consider container sizes. The presence of a shipping description for a particular mode of transport (sea, air, etc.), does not indicate that the product is packaged suitably for that mode of transport. All packaging must be reviewed for suitability prior to shipment, and compliance with the applicable regulations is the sole responsibility of the person offering the product for transport. People loading and unloading dangerous goods must be trained on all of the risks deriving from the substances and on all actions in case of emergency situations.

Transport in bulk according to Annex II of MARPOL and the IBC Code : Not available.

Proper shipping name : Not available.

Ship type : Not available.

Pollution category : Not available.

Section 15. Regulatory information

SARA 313

SARA 313 (40 CFR 372.45) supplier notification can be found on the Environmental Data Sheet.

California Prop. 65

WARNING: This product contains chemicals known to the State of California to cause cancer and birth defects or other reproductive harm.

Section 16. Other information

Hazardous Material Information System (U.S.A.)

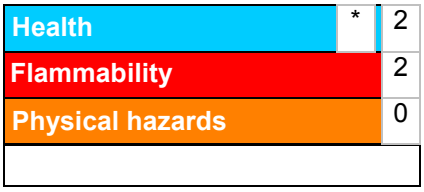

The customer is responsible for determining the PPE code for this material. For more information on HMIS® Personal Protective Equipment (PPE) codes, consult the HMIS® Implementation Manual.

Caution: HMIS® ratings are based on a 0-4 rating scale, with 0 representing minimal hazards or risks, and 4 representing significant hazards or risks. Although HMIS® ratings and the associated label are not required on SDSs or products leaving a facility under 29 CFR 1910.1200, the preparer may choose to provide them. HMIS® ratings are to be used with a fully implemented HMIS® program. HMIS® is a registered trademark and service mark of the American Coatings Association, Inc.

Procedure used to derive the classification

Classification	Justification
FLAMMABLE LIQUIDS - Category 3	On basis of test data
SKIN CORROSION/IRRITATION - Category 2	Calculation method
SERIOUS EYE DAMAGE/ EYE IRRITATION - Category 2A	Calculation method
SKIN SENSITIZATION - Category 1	Calculation method
CARCINOGENICITY - Category 2	Calculation method
TOXIC TO REPRODUCTION (Fertility) - Category 2	Calculation method
TOXIC TO REPRODUCTION (Unborn child) - Category 2	Calculation method
SPECIFIC TARGET ORGAN TOXICITY (REPEATED EXPOSURE) - Category 2	Calculation method
ASPIRATION HAZARD - Category 1	Calculation method

History

Date of printing : 9/9/2017

Date of issue/Date of revision : 9/9/2017

Section 16. Other information

Date of previous issue : 8/28/2017

Version : 10

Key to abbreviations : ATE = Acute Toxicity Estimate
BCF = Bioconcentration Factor
GHS = Globally Harmonized System of Classification and Labelling of Chemicals
IATA = International Air Transport Association
IBC = Intermediate Bulk Container
IMDG = International Maritime Dangerous Goods
LogPow = logarithm of the octanol/water partition coefficient
MARPOL = International Convention for the Prevention of Pollution From Ships, 1973 as modified by the Protocol of 1978. ("Marpol" = marine pollution)
UN = United Nations

Notice to reader

It is recommended that each customer or recipient of this Safety Data Sheet (SDS) study it carefully and consult resources, as necessary or appropriate, to become aware of and understand the data contained in this SDS and any hazards associated with the product. This information is provided in good faith and believed to be accurate as of the effective date herein. However, no warranty, express or implied, is given. The information presented here applies only to the product as shipped. The addition of any material can change the composition, hazards and risks of the product. Products shall not be repackaged, modified, or tinted except as specifically instructed by Sherwin-Williams, including but not limited to the incorporation of non Sherwin-Williams products or the use or addition of products in proportions not specified by Sherwin-Williams. Regulatory requirements are subject to change and may differ between various locations and jurisdictions. The customer/buyer/user is responsible to ensure that his activities comply with all country, federal, state, provincial or local laws. The conditions for use of the product are not under the control of the manufacturer; the customer/buyer/user is responsible to determine the conditions necessary for the safe use of this product. The customer/buyer/user should not use the product for any purpose other than the purpose shown in the applicable section of this SDS without first referring to the supplier and obtaining written handling instructions. Due to the proliferation of sources for information such as manufacturer-specific SDS, the manufacturer cannot be responsible for SDSs obtained from any other source.

DEPARTMENT OF THE ARMY
ALBUQUERQUE DISTRICT, CORPS OF ENGINEERS
ALBUQERQUE DISTRICT OFFICE
4101 JEFFERSON PLAZA NE
ALBUQUERQUE, NM 87109

SUBMITTAL REVIEW VERIFICATION SHEET

PROJECT TITLE: Kirtland BFF Mid-Plume Pump and Treat System Expansion
CONTRACT NUMBER: W912DR-12-D-0006 DM01
DATE RECEIVED: 11-28-2017
DATE REVIEWED: 11-28-2017

DESCRIPTION OF ITEMS REVIEWED:

1. Gravel Mulch Seeding- Revision 1

NO EXCEPTIONS TAKEN.	**X**
EXCEPTIONS AS NOTED ON DRAWINGS AND/OR ATTACHED SHEETS(S). RESUBMISSION NOT REQUIRED.	
EXCEPTIONS AS NOTED ON DRAWINGS AND/OR ATTACHED SHEETS(S). RESUBMISSION REQUIRED.	
RECEIPT ACKKNOWLEDGED.	

Notes:

NOTE: ITEMS REVIEWED AS TO GENERAL LAYOUT ONLY. DIMENSIONS AND QUANTITIES NOT CHECKED. REVIEW DOES NOT RELIEVE CONTRACTOR OF RESPONSIBILITIES FOR ANY ERRORS WHICH MAY EXIST AS CONTRACTOR SHALL BE RESPONSIBLE FOR DIMENSIONS AND DESIGN OF ADEQUATE CORRECTIONS, DETAILS AND SATISFACTORY CONSTRUCTION OF WORK.

SIGNATURE SANCHEZ.AMY.ELIZABETH.1454434338 Digitally signed by SANCHEZ.AMY.ELIZABETH.1454434338 DN: c=US, o=U.S. Government, ou=DoD, ou=PKI, ou=USA, cn=SANCHEZ.AMY.ELIZABETH.1454434338 Date: 2017.11.28 15:12:42 -07'00' **DATE** 11/28/17

EA Engineering, Science, and Technology, Inc., PBC

Submittal Review Sheet 1

Project Name: **Kirtland BFF Mid-Plume Pump and Treat System Expansion**			Date Received: **11/28/17**			
Project Owner: **Kirtland Air Force Base**			Checked By: **Tyler Curley**			
Contractor: **RMCI, Inc.**	Engineer: **EA Engineering, Science and Technology, Inc., PBC.**		Log Page: **NA**			
Address: **6211 Chappell Rd NE, Albuquerque, NM 87113**	Address: **320 Gold Ave. SW, Suite 1300 Albuquerque, NM 87102**		EA No.: **62599DM01**			
			Spec. Section: **32 92 19**			
			Drawing/Detail No.: **NA**			
ATTN: **Phillip Johnson**	ATTN: **Devon Jercinovic**		1st Sub		Re-Sub	
Date Transmitted: **11/28/2017**	Prev. Transmittal Date:					

Item No.	No. Copies	Description	Manufacturer	Mfg/Vendor Dwg or Detail	Action Taken*
1	1	Gravel Mulch Seeding	Caldon Seeding and Reclamation		A

The Action Designated Above is in Accordance with the Following Legend:

A – Furnish as Submitted
B – Furnish as Noted
C – Revise and Re-submit
1. Not enough information for review.
2. No reproducible submitted.
3. Copies illegible.
4. Not enough copies submitted.
5. Wrong sequence number.
6. Wrong resubmittal number.
7. Wrong Spec. Section.
8. Wrong form used.
9. See Comments.

D – Rejected
E – Engineer's Review not Required
1. Submittal not required.
2. Supplemental Information. Submittal retained for Information purposes only.
3. Information reviewed and approved on prior submittal.
4. See Comments.

Review is for general compliance with Contract Documents. No responsibility is assumed for correctness of dimensions or detail. Contractor is required to specify deviations from contract requirements. Lack of exceptions noted by Engineer does not waive Contractor's obligation to comply with Drawings and Specifications.

Comments:
Items reviewed and confirmed to meet requirements
Issues in Bold

Seed mix, application rate, fertilizer, and gravel mulch are to COA specifications.

By: _____ Date: 11/28/17

Distribution: [1] Contractor [1] Engineer [1] Owner

SUBMITTAL

granite SEED and erosion control

Tren Hagman
490 East 76th Ave.
Denver, CO 80229

tren@graniteseed.com
Phone: (720) 496-0600
Fax: (720) 496-0601

Date: November 28, 2017

To: Len Horan

Company: Caldon Seeding and Reclamation

From: Tren Hagman

Re: Seed Submittal for KAFB- Conveyance Line

These are old genus names, new names are the same as listed in COA specifications

This Letter is to serve that your company has contracted Granite Seed Company to provide the seed for the KAFB- Conveyance Line Project. The seed mix for this project can be provided as specified. The table below shows the mix we will provide for this project. A seed certification will accompany your order identifying individual species, lots, varieties, origin, and pure live seed information.

Species	PLS lbs./acre
Indian ricegrass (Achnatherum hymenoides)	5.00
Galleta grass (Pleuraphis jamesii)	1.00
Sideoats grama (Bouteloua curtipendula)	3.00
Blue grama (Bouteloua gracilis)	1.00
Sand dropseed (Sporobolus cryptandrus)	1.00
Fourwing saltbush (Atriplex canescens)	1.00
Total:	**12.00**

All seed supplied will be in compliance with State and Federal Seed noxious weed laws, with proper labeling and documentation. If you or anyone associated with this project has questions or need anything else at this time, please contact me at the number provided in the header of this document.

Tren Hagman

RICHLAWN ORGANIC 100

Richlawn 3-6-3 with Mychorrizae and Humates

Richlawn 3-6-3 is a CDOT Approved Natural, Organic Fertilizer containing a slow release Nitrogen, Organic Phosphorous, Mycorrhizae and a rich amount of Humus. Richlawn 3-6-3 restores depleted soils with essential nutrients to build a sustainable environment in which to establish vegetation quickly.

Manufactured by Richlawn Turf Food, LLC
15121 WCR 32, Platteville, CO 80651
Net Weight 50 Lbs (22.68 Kg.)

Guaranteed Analysis

Total Nitrogen(N) 3.0%
2.90% Water Insoluble Organic Nitrogen*
.010% Water Soluble Organic Nitrogen
Available Phosphate
(P_2O_5) 6.0%
Soluble Potash (K_2O) 3.0%
Calcium (Ca) 10.0%

Plant Nutrient Sources: Dried Poultry Manure, Bone Meal and Sulfate of Potash.

*2.90% Water insoluble nitrogen from dried poultry manure and bone meal.

Non-Plant Food Ingredients
Humates 14.0%
Endo Mychorrhizae 30,000
Propagules
7500 Propagules Glomus mosseae
7500 Propagules Glomus entunicatum
7500 Propagules Glomus intradices
7500 Propagules Glomus aggregatum

DISTRIBUTED BY:
TRITON ENVIRONMENTAL
5433 NEWPORT STREET
COMMERCE CITY, CO 80022
303.945.7588 (O) 303.945.7579 (F)

The Benefits of Richlawn 3-6-3

- Increases the Nutrient and water holding capacity of the exisiting soil.
- Increases Soil Porosity which promotes superior Root Establishment.
- Mychrrhizae transports nutrients from the soils and delivers them to the plants roots, greatly reducing fertilization and water need.
- Humates add organic material to the soil which increases soil microbiology and water holding capacity.

4
25FT
5
6
7
8
9
10

DEPARTMENT OF THE ARMY
ALBUQUERQUE DISTRICT, CORPS OF ENGINEERS
ALBUQERQUE DISTRICT OFFICE
4101 JEFFERSON PLAZA NE
ALBUQUERQUE, NM 87109

SUBMITTAL REVIEW VERIFICATION SHEET

PROJECT TITLE: Kirtland BFF Mid-Plume Pump and Treat System Expansion
CONTRACT NUMBER: W912DR-12-D-0006 DM01
DATE RECEIVED: 11-21-2017
DATE REVIEWED: 11-22-2017

DESCRIPTION OF ITEMS REVIEWED:

1. KAFB-106239 VFD Resubmittal

NO EXCEPTIONS TAKEN.	
EXCEPTIONS AS NOTED ON DRAWINGS AND/OR ATTACHED SHEETS(S). RESUBMISSION NOT REQUIRED.	**X**
EXCEPTIONS AS NOTED ON DRAWINGS AND/OR ATTACHED SHEETS(S). RESUBMISSION REQUIRED.	
RECEIPT ACKKNOWLEDGED.	

Notes:

Cover sheet is incorrectly labeled as "Extraction Well #7"

NOTE: ITEMS REVIEWED AS TO GENERAL LAYOUT ONLY. DIMENSIONS AND QUANTITIES NOT CHECKED. REVIEW DOES NOT RELIEVE CONTRACTOR OF RESPONSIBILITIES FOR ANY ERRORS WHICH MAY EXIST AS CONTRACTOR SHALL BE RESPONSIBLE FOR DIMENSIONS AND DESIGN OF ADEQUATE CORRECTIONS, DETAILS AND SATISFACTORY CONSTRUCTION OF WORK.

SIGNATURE SANCHEZ.AMY.ELIZABETH.1454434338 Digitally signed by SANCHEZ.AMY.ELIZABETH.1454434338 DN: c=US, o=U.S. Government, ou=DoD, ou=PKI, ou=USA, cn=SANCHEZ.AMY.ELIZABETH.1454434338 Date: 2017.11.22 12:46:29 -07'00' **DATE** 11/22/2017

EA Engineering, Science, and Technology, Inc., PBC

Submittal Review Sheet 8

Project Name: **Kirtland BFF Mid-Plume Pump and Treat System Expansion**				Date Received: **11/21/2017**	
Project Owner: **Kirtland Air Force Base**				Checked By: **Tyler Curley**	
Contractor: **Techsas Inc.**	Engineer: **EA Engineering, Science and Technology, Inc., PBC.**			Log Page: **NA**	
Address: **4819 West Bayshore Drive** **Bacliff, TX 77518**	Address: **320 Gold Ave. SW, Suite 1300** **Albuquerque, NM 87102**			EA No.: **62599DM01**	
				Spec. Section: **00 00 00**	
				Drawing/Detail No.:	
ATTN: **Ed Butler**	ATTN: **Devon Jercinovic**			1st Sub	Re-Sub
Date Transmitted: **11/21/2017**	Prev. Transmittal Date:				

Item No.	No. Copies	Description	Manufacturer	Mfg/Vendor Dwg or Detail	Action Taken*
8	1	KAFB-106239 VFD	Rockwell Automation, Inc.		**A**

The Action Designated Above is in Accordance with the Following Legend:

A – Furnish as Submitted
B – Furnish as Noted
C – Revise and Re-submit
1. Not enough information for review.
2. No reproducible submitted.
3. Copies illegible.
4. Not enough copies submitted.
5. Wrong sequence number.
6. Wrong resubmittal number.
7. Wrong Spec. Section.
8. Wrong form used.
9. See Comments.

D – Rejected
E – Engineer's Review not Required
1. Submittal not required.
2. Supplemental Information. Submittal retained for Information purposes only.
3. Information reviewed and approved on prior submittal.
4. See Comments.

Review is for general compliance with Contract Documents. No responsibility is assumed for correctness of dimensions or detail. Contractor is required to specify deviations from contract requirements. Lack of exceptions noted by Engineer does not waive Contractor's obligation to comply with Drawings and Specifications.

Comments:
VFD was preapproved. Please note that revision 1 includes the NEMA 4X enclosure and shop drawings showing the locations of cutouts for the aftermarket AC unit upgrade.

By: _____ Date: 11/21/17

Distribution: [1] Contractor [1] Engineer [1] Owner

Rockwell Automation

BSE / I & C SOLUTIONS

POWERFLEX 753, 25HP ND, 34A, 460VAC

R1USW01163 - 0001

NEMA 4X - WALLMOUNT

EXTRACTION WELL KAFB-106239

DATE	BY	APPROVAL
11/17/17	MW	DESIGN REVIEW
11/20/17	JWB	FOR MANUFACTURING
		AS SHIPPED
		AS COMMISSIONED

REV.	DATE	BY	ECN/CR. NO.

Rockwell Automation

TITLE SHEET FOR
BSE / I & C SOLUTIONS
EXTRACTION WELL #7

Drawn by: JWB | Date: 11/15/17

CONFIDENTIAL AND PROPRIETARY INFORMATION.
THIS DOCUMENT CONTAINS CONFIDENTIAL AND PROPRIETARY INFORMATION OF ROCKWELL AUTOMATION, INC. AND MAY NOT BE USED, COPIED OR DISCLOSED TO OTHERS, EXCEPT WITH THE AUTHORIZED WRITTEN PERMISSION OF ROCKWELL AUTOMATION, INC.

Sheet N1 Of Next Sh N2

Size		Ver
D	R1USW01163 – 0001	0

FILENAME	SH	DRW_DESC1	DRW_DESC2	DRW_DESC3
N0001	N1	TITLE SHEET FOR	BSE / I & C SOLUTIONS	EXTRACTION WELL #7
N0002	N2	INDEX SHEET FOR	BSE / I & C SOLUTIONS	EXTRACTION WELL #7
N0003	N3	GENERAL NOTES FOR	BSE / I & C SOLUTIONS	EXTRACTION WELL #7
N0004	N4	WIRE CLASIFICATION FOR	BSE / I & C SOLUTIONS	EXTRACTION WELL #7
N0005	N5	TORQUE VALUES FOR	BSE / I & C SOLUTIONS	EXTRACTION WELL #7
E0005	5	SCHEMATIC DRAWING FOR	POWER WIRING AND 115VAC CIRCUIT	EXTRACTION WELL #7
E0010	10	SCHEMATIC DRAWING FOR	POWERFLEX 753 POWER WIRING	EXTRACTION WELL #7
E0011	11	SCHEMATIC DRAWING FOR	24VDC I/O WIRING	EXTRACTION WELL #7
L0001	L1	LAYOUT DRAWING FOR	ENCLOSURE SIZE AND DIMENSIONS	EXTRACTION WELL #7
L0002	L2	LAYOUT DRAWING FOR	ENCLOSURE DOOR AND DEVICES	EXTRACTION WELL #7
L0003	L3	LAYOUT DRAWING FOR	PANEL AND COMPONENTS	EXTRACTION WELL #7

DATE	BY	APPROVAL
11/17/17	MW	DESIGN REVIEW
11/20/17	JWB	FOR MANUFACTURING
		AS SHIPPED
		AS COMMISSIONED

REV.	DATE	BY	ECN/CR. NO.

Rockwell Automation

INDEX SHEET FOR
BSE / I & C SOLUTIONS
EXTRACTION WELL #7

Drawn by: JWB | Date: 11/15/17

CONFIDENTIAL AND PROPRIETARY INFORMATION.
THIS DOCUMENT CONTAINS CONFIDENTIAL AND PROPRIETARY INFORMATION OF ROCKWELL AUTOMATION, INC. AND MAY NOT BE USED, COPIED OR DISCLOSED TO OTHERS, EXCEPT WITH THE AUTHORIZED WRITTEN PERMISSION OF ROCKWELL AUTOMATION, INC.

Sheet N2 Of Next Sh N3

Size D | R1USW01163 – 0001 | Ver 0

DRAWING STANDARDS:

SYMBOLS:

- REFERS TO NOTE GIVEN BELOW
- ▲ LOW POWER CONTACT
- ARROW INDICATES FUNCTION INCREASE (ALWAYS CLOCKWISE)

4 **DANGER** – THIS EQUIPMENT MAY BE AT LINE VOLTAGE EVEN WHEN NOT IN OPERATION. TO AVOID ELECTRIC SHOCK, DISCONNECT.

5 **CAUTION** – NEVER REMOVE OR INSERT ANY MODULE OR CARD WHILE THE POWER IS ON.

9 REMOVE JUMPER IF ADDITIONAL INTERLOCK IS ADDED.

13 SEPARATELY MOUNTED, SUPPLIED BY OTHERS

14 SEPARATELY MOUNTED, SUPPLIED BY ROCKWELL AUTOMATION

32 MOTOR STABILIZING FIELD, S1 AND S2, IS NOT REQUIRED FOR NORMAL OPERATION. TAPE S1 AND S2 SEPARATELY AND DO NOT USE.

33 DRIVE MOTOR CONNECTIONS AS SHOWN ARE FOR INDICATED ROTATION FACING COMMUTATOR END. FOR OPPOSITE ROTATION, INTERCHANGE A1 AND A2 CONNECTIONS IN MOTOR CONDUIT BOX.

34 TACHOMETER LEADS MUST BE CONNECTED TO GIVE THE INDICATED POLARITY.

35 IF OPPOSITE ROTATION IS DESIRED, CHANGE POLARITY OF THE COSINE SIGNAL BY INTERCHANGING THE COSINE INPUT LEADS.

36 USE TWISTED TWO - CONDUCTOR CABLE. THIS CABLE MUST BE IN A SEPARATE SIGNAL CONDUIT. IT CANNOT BE RUN WITH OTHER CONDUCTORS OR CABLES. USE RELIANCE PART NUMBER 417900-76EAD OR EQUIVALENT. REFER TO FIELD INSTALLATION AND WIRING TABLE ON NEXT SHEET FOR WIRE SPECIFICATIONS.

38 SIGNAL WIRE CABLES WITH THIS NOTE NUMBER CAN BE IN THE SAME SIGNAL CONDUIT. THEY CANNOT BE RUN WITH NON-SIGNAL WIRES. REFER TO FIELD INSTALLATION AND WIRING TABLE ON NEXT SHEET FOR WIRE SPECIFICATIONS.

38-1 REFER TO NOTE 38. THE NUMBER FOLLOWING THE NOTE 38 IDENTIFIES THE CABLES THAT MAY BE GROUPED TOGETHER IN THE SAME SIGNAL CONDUIT. FOR EXAMPLE, CABLES REFERENCED WITH NOTE 38-1 CANNOT BE RUN IN THE SAME SIGNAL CONDUIT WITH NOTE 38-2 CABLES.

40 COAXIAL CABLES WITH THIS NOTE CAN BE IN THE SAME SEPARATE SIGNAL CONDUIT. THEY CANNOT BE RUN WITH OTHER CONDUCTORS OR CABLES. FOR RECOMMENDED CABLE TYPE, REFER TO PRODUCT'S NETWORK MANUAL.

TYPE	CABLE P/N (BELDEN P/N)	CONNECTOR P/N (AMPHENOL P/N)
RG59	417900-148A (9259)	405504-74A (31-212-1005)
RG11	417900-149A (8238)	612293-B (6775)

TERMINATOR 75 OHM
RELIANCE P/N 707204-20A
AMPHENOL P/N 46650-75

41 **DANGER** – DO NOT OPEN DISCONNECT SWITCH WHILE THE MOTOR IS ENERGIZED.

47 RESOLVER WIRES: LOW LEVEL SIGNAL WIRING. MUST BE RUN IN SEPARATE SIGNAL CONDUIT OR TRAY.

	BELDEN P/N	NO. OF TWISTED PAIRS		AWG #	RECOMMENDED MAXIMUM DIST. FOR EACH RESOLVER TYPE a> X1	a> X2	a> X5
b>	9730	3		24	1000 FT.	1000 FT.	600 FT.

c>

a> DISTANCES BEYOND THOSE RECOMMENDED MAY REQUIRE ADDITIONAL TUNING. USE RELIANCE CUSTOM PANEL 0-58801

b> MAY ONLY BE RUN IN CONDUIT, PER NEC

c> NOTE: CONNECT CABLE SHIELD TO GROUND AT CABINET ONLY

48 FIBER-OPTIC CABLES WITH THIS NOTE MAY BE RUN WITH ANY LEVEL 1 SIGNAL WIRING. IF NECESSARY THESE CABLES MAY BE RUN WITH ANY LEVEL WIRING. SEE INSTALLATION MANUAL FOR RESTRICTIONS.

52 REFER TO TRANSFORMER NAMEPLATE FOR CONNECTIONS OF PRIMARY LEADS.

53 **DANGER** – TRANSFORMER IS CONNECTED TO LINE VOLTAGE EVEN WHEN THE A-C DISCONNECT IS OPEN.

DATE	BY	APPROVAL
11/17/17	MW	DESIGN REVIEW
11/20/17	JWB	FOR MANUFACTURING
		AS SHIPPED
		AS COMMISSIONED

99 USER SUPPLIED PROTECTION MUST INCLUDE A DISCONNECTING DEVICE ON THE PRIMARY SIDE OF THE TRANSFORMER. PRIMARY AND SECONDARY WIRE PROTECTION FOR THE ISOLATION TRANSFORMER MUST BE PROVIDED PER NEC.

D MOUNTED ON DOOR.

H MOUNTED ON CABINET HOOD

R MOUNTED ON CONTROL HOUSE ROOF

T MOUNTED ON CABINET TRIM

E EXISTING EQUIPMENT

USE EXAMP. LOCATION CODES	DESCRIPTION
REM_NS	REMOTE MOUNTED - NOT SUPPLIED BY ROCKWELL AUTOMATION.
REM_S	REMOTE MOUNTED - SUPPLIED BY ROCKWELL AUTOMATION.
REM	REMOTE MOUNTED.
OS_2	MTD. ON OPERATORS STATION No. 2
PB_3	MTD. ON PUSHBUTTON STATION No. 3

GENERAL NOTES:

1. FOR FURTHER DRIVE INFORMATION ON INSTRUCTION MANUALS, SEE RESPECTIVE SCHEMATIC SECTIONS.
2. ⏚ - BUILDING GROUND TO BE GROUNDED BY CUSTOMER.
   TE - SYSTEM ZERO POTENTIAL NODE
   PE - POWER EQUIPMENT GROUND
   ⏚ - PANEL (CHASSIS) GROUND
3. THE INTERNAL WIRING SELECTED MEETS OR EXCEEDS NEC, UL, AND CSA. INTERNAL POWER AND CONTROL WIRE HAS INSULATION RATED AT 105°C OR HIGHER.
4. * -INDICATES COMPONENTS SUPPLIED BY OTHERS.
5. (4) INDICATES FIELD INSTALLED WIRES AS WELL AS THE WIRING LEVEL.
   WHEN ACCOMPANIED WITH THE DESIGNATION (FWC) THE WIRES/CABLE ARE PRE-SUPPLIED AT THE SOURCE CONNECTION BY ROCKWELL FOR CUSTOMER INSTALLATION AT SITE. (FWC) INDICATES FURNISHED WITH CABINET.
6. —○— -INDICATES OUTGOING TERMINAL.
   —□— -INDICATES TERMINAL ON ELECTRONIC ASSEMBLY PRINTED CIRCUIT BOARD (1EA) ETC.
   CR —⊗— -INDICATES RELAY OR CONTACTOR WITH SUPPRESSOR.
7. COIL AND CONTACT CROSS REFERENCING - NUMBERS ADJACENT TO COIL AND UNDER CONTACT INDICATE SHEET AND LINE NUMBERS.

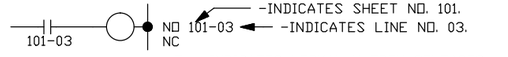

-INDICATES SHEET NO. 101.
-INDICATES LINE NO. 03.
NO - INDICATES NORMALLY OPEN CONTACTS
NC - INDICATES NORMALLY CLOSED CONTACTS

OFF-PAGE CROSS REFERENCING - NUMBERS ADJACENT TO SOURCE AND DESTINATION SYMBOLS INDICATE SHEET AND LINE NUMBERS.

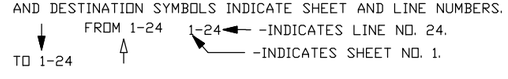

-INDICATES LINE NO. 24.
-INDICATES SHEET NO. 1.

REV DATE: 9-17-2008

8. WIRE # GENERATION
   - INDICATES WIRE NUMBER.
   - INDICATES SEQUENCE (1,2,, 3 . . . etc.).
   - INDICATES LINE NUMBER 24.
   - INDICATES SHEET NUMBER 11.

   11242

   INTERNAL WIRE NUMBERS MAY BE "FIXED" WITH A LINE AND SEQUENCE, BUT MAY SCHEMATICALLY SHOW A PREFIX.
9. TYPICAL DUAL VOLTAGE MOTOR FIELD CONNECTIONS ARE SHOWN BELOW. CONSULT THE MOTOR MANUFACTURER'S INSTRUCTIONS FOR CORRECT CONNECTIONS.

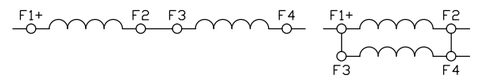

10. DC MOTOR ROTATION - CONSULT THE MOTOR MANUFACTURER'S INSTRUCTIONS FOR CORRECT CONNECTIONS.
    FOR CCW ROTATION FACING COMMUTATOR END:
    A1 IS POSITIVE
    F1 IS POSITIVE
    FOR CW ROTATION FACING COMMUTATOR END:
    A2 IS POSITIVE
    F1 IS POSITIVE
    FOR CCW ROTATION WITH SERIES FIELD:

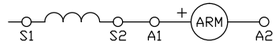

    FOR CW ROTATION WITH SERIES FIELD:

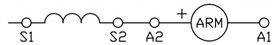

    FOR CCW ROTATION WITHOUT SERIES FIELD:

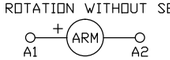

    FOR CW ROTATION WITHOUT SERIES FIELD:

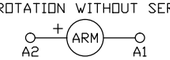

11. AC MOTOR ROTATION - CONSULT THE MOTOR MANUFACTURER'S INSTRUCTIONS FOR CORRECT CONNECTIONS.
    FOR CW ROTATION VIEWED FROM MOTOR SHAFT:
    INVERTER OUTPUT U2 TO T1 (EUROPEAN MARKING U1)
    V2 TO T2 (EUROPEAN MARKING V1)
    W2 TO T3 (EUROPEAN MARKING W1)
    FOR CCW ROTATION VIEWED FROM MOTOR SHAFT:
    INVERTER OUTPUT U2 TO T1 (EUROPEAN MARKING U1)
    V2 TO T3 (EUROPEAN MARKING W1)
    W2 TO T2 (EUROPEAN MARKING V1)

    NOTE: NOT ALL AC MOTOR SUPPLIERS COMPLY WITH THE ABOVE CONVENTIONS.

COMBINATION MOTOR CONTROLLER WITH MOTOR CIRCUIT PROTECTOR

DANGER: To maintain overcurrent, short circuit and ground fault protection, the manufacturer's instructions for selecting current elements and setting the instantaneous-trip circuit breaker must be followed.

AVERTISSEMENTPour assurer une protection continue contre les surintensités, les court-circuits et une mise à la terre accidentelle, il est essentiel de choisir les ?el?ements thermiques et de régler le disjoncteur à déclenchement instantané selon la notice technique du fabricant.

Determine motor full load current and motor design type identifier from motor nameplate.

For Design B, C an D motors adjust motor circuit protector to operate at a current setting between ten (10) and thirteen (13) times the full load current. For Design E and N motors adjust motor circuit protector to operate at a current setting between thirteen (13) and seventeen (17) times the full load current.

NOTE: Motor circuit protector is set at minimum current setting when shipped from factory.

DANGER: Tripping of the instantaneous-trip circuit breaker is an indication that a fault current has been interrupted. Current carrying components of the magnetic motor controller should be examined and replaced if damaged, to provide continued protection against a risk of fire or electric shock. If burnout of the current element of an overload relay occurs, the complete overload relay must be replaced. (Refer to NEMA Standards Publication No. ICS 2.2 titled: 'Maintenance of Motor Controllers After a Fault Condition' ñ also published as NEMA Standard Publication No. ICS 2, Part ICS 2-302.)

AVERTISSEMENTL'ouverture du disjoncteur à déclenchement instantané indique qu'un courant de défaut a été interrompu. Les composants conducteurs de la commande magnétique du moteur doivent être inspectés et remplacés s'ils ont subi des dommages, afin d'assurer une protection continue contre le risque d'incendie et de choc électrique. En cas de défaillance de l'élément thermique d'un relais de surcharge, celui-ci doit être remplacé dans sa totalité.

REV.	DATE	BY	ECN/CR. NO.

Rockwell Automation

CONFIDENTIAL AND PROPRIETARY INFORMATION.
THIS DOCUMENT CONTAINS CONFIDENTIAL AND PROPRIETARY INFORMATION OF ROCKWELL AUTOMATION, INC. AND MAY NOT BE USED, COPIED OR DISCLOSED TO OTHERS, EXCEPT WITH THE AUTHORIZED WRITTEN PERMISSION OF ROCKWELL AUTOMATION, INC.

GENERAL NOTES FOR
BSE / I & C SOLUTIONS
EXTRACTION WELL #7

Drawn by: JWB | Date: 11/15/17

Sheet N3 Of Next Sh N4

Size D | R1USW01163 – 0001 | Ver 0

FIELD INSTALLATION AND WIRING

CATEGORY	WIRING LEVEL	SUB-GROUP	SIGNAL DEFINITION	SIGNAL EXAMPLES	CABLE TYPE	MINIMUM SPACING IN INCHES BETWEEN LEVELS (STEEL CONDUIT/TRAY) 4S	4	3 3S	2 2S	1	SPACING NOTES
POWER (SEE NOTE 2-C FOR SPACING BELOW)	4	S	AC POWER (> 600VAC)	2.3KV 3 PHASE AC LINES	PER NEC AND LOCAL CODES	SEE NOTE: 7	SEE NOTE: 7	SEE NOTE: 7	SEE NOTE: 7	SEE NOTE: 7	1 2 5
			AC POWER (TO 600VAC)	480V 3 PHASE AC LINES	PER NEC AND LOCAL CODES	SEE NOTE: 7	0	3/6	3/12	3/9	
			DC POWER	DC MOTOR ARMATURE	PER NEC AND LOCAL CODES						
			DC POWER	REGULATED DC MOTOR FIELD	PER NEC AND LOCAL CODES						
CONTROL (300V MAX OR 20 AMPS)	3		115VAC/VDC LOGIC	RELAY LOGIC, PLC I/O	PER NEC AND LOCAL CODES	SEE NOTE: 7	3/6	0	3/9	1/3	
			115VAC POWER	POWER SUPPLIES, INSTRUMENTS							
		S	24VAC/VDC LOGIC	PLC I/O	PER NEC AND LOCAL CODES						
MEDIUM LEVEL SIGNAL (PROCESS)	2		ANALOG SIGNALS DC SUPPLIES	REF/FEEDBACK SIGNAL, 5 TO 24VDC SUPPLIES	SHIELDED CABLE BELDEN 8770, 9418	SEE NOTE: 7	3/12	3/9	0	1/1	2 3 4 5 6
			DIGITAL (LOW SPEED)	TTL							
		S	DIGITAL (HIGH SPEED)	RESOLVER, ENCODER/COUNTER I/O, PULSE TACH FEEDBACK	SHIELDED CABLE BELDEN 9730, 9773, 9892 (SEE USER MANUAL)						
		SHLD	ANALOG SIGNALS	REF/FEEDBACK SIGNALS	SHIELDED CABLE, TWISTED CONDUCTORS BELDEN 8760, 9729						
LOW LEVEL SIGNAL (COMM.)	1		SERIAL COMMUNICATION	RS232, 422 TO TERMINALS, PRINTERS	SHIELDED CABLE RS232-BELDEN 8770,8760 RS422-BELDEN 9729,9730	SEE NOTE: 7	3/9	1/3	1/1	0	5
		S	PLC SERIAL COMMUNICATION (> 20K BAUD)	PLC REMOTE I/O, PLC DATA HIGHWAY	TWINAXIAL CABLE BELDEN 9463 R-A 1770-CD						
		C	PLC SERIAL COMMUNICATION (> 5MB)	CONTROL NET	RG-6 QUAD SHIELD, COAX CABLE; A-B 1786-RG6 BELDEN 3092A						
		D	CAN COMMUNICATION	DEVICE - NET DRIVE - DRIVE	R-A 1485C-P1-C						
		E	ETHERNET		DEPENDS ON INSTALLATION						
		F	PLC SERIAL COMMUNICATION (> 5MB)	CONTROL-NET	FIBER OPTIC		N/A	N/A	N/A	N/A	N/A

EXAMPLE: SPACING RELATIONSHIP BETWEEN 480VAC INCOMING LEADS
a. 480VAC LEADS ARE LEVEL 4.
b. 24VDC LEADS ARE LEVEL 3.
c. FOR SEPARATE STEEL CONDUITS, THE CONDUITS ARE TO BE 3 INCHES APART.
d. IN A CABLE TRAY THE TWO GROUPS OF LEADS ARE TO BE 6 INCHES APART.

SHIELDED CABLES RECOMMENDATIONS:

BELDEN	8770	18 AWG - 3 CONDUCTOR SHIELDED
BELDEN	8760	18 AWG - 2 CONDUCTOR SHIELDED
BELDEN	9418	18 AWG - 4 CONDUCTOR SHIELDED
BELDEN	9728	24 AWG - 3 SHIELDED PAIRS (6 COND.)
BELDEN	9729	24 AWG - 2 SHIELDED PAIRS (4 COND.)
BELDEN	9730	24 AWG - 3 SHIELDED PAIRS (6 COND.)
BELDEN	9892	22 AWG - 3 SHIELDED PAIRS (6 COND.)
BELDEN	9773	18 AWG - 3 SHIELDED PAIRS (6 COND.)
BELDEN	9463	75 OHM - TWINAXIAL (2 COND.)

FIELD WIRING INSIDE ROCKWELL ENCLOSURE:

1. CONNECTIONS WILL BE ONLY TO TERMINALS PROVIDED.
2. WIRE LENGTH FROM ENTRY POINT TO TERMINAL BOARD TO BE AS SHORT AS POSSIBLE.
3. SIGNAL WIRE MUST NOT BE LACED OR RUN WITH NON-SIGNAL WIRE AFTER ENTRY INTO THE ENCLOSURE.
4. INCOMING WIRE MUST NOT BE ROUTED IN WIRE CHANNELS OR THROUGH AREAS OF POWER AND CONTROL COMPONENTS AND WIRING.
5. USE LASHING BARS WHEN PROVIDED FOR CUSTOMER CONVENIENCE.

FIELD INSTALLATION GROUNDING GUIDELINES

1. FOR DRIVES INSTALLATION, REFER TO 'WIRING AND 'GROUNDING GUIDELINES', PUBLICATION DRIVES-IN001
2. FOR PLC AND I/O INSTALLATION, REFER TO 'INDUSTRIAL AUTOMATION WIRING AND GROUNDING GUIDELINES', PUBLICATION 1770-4.1
3. NEC ARTICLE 250, GROUNDING AND BONDING
4. LOCAL CODE REQUIREMENTS

REV DATE: 9-18-2008

DATE	BY	APPROVAL
11/17/17	MW	DESIGN REVIEW
11/20/17	JWB	FOR MANUFACTURING
		AS SHIPPED
		AS COMMISSIONED

GENERAL NOTES:

1. STEEL CONDUIT IS RECOMMENDED FOR LEVELS 1 AND 2. FOR AC MOTOR CABLES, SEE NOTE 5.
   ALL CONDUITS CONNECTED TO THE CABINETS SHOULD BE PROPERLY SEALED TO MINIMIZE AIR OR WATER ENTRY INTO THE CABINETS. IF ALUMINUM CONDUIT IS USED.
   A. IT REQUIRES THE SAME MINIMUM SPACING IS USED AS THAT SHOWN FOR CABLE TRAYS.
   OR
   B. INDIVIDUAL STEEL JACKETED (STEEL MESH) CABLES ARE TO BE USED IF THE CONDUIT SPACINGS NEED BE THE SAME AS STEEL CONDUIT.
2. SPACING SHOWN BETWEEN LEVELS IS THE MINIMUM REQUIRED FOR PARALLEL RUNS ≤ 400 FEET. GREATER SPACINGS SHOULD BE USED WHERE POSSIBLE.
3. SHIELDS FOR SHIELDED CABLES MUST BE CONNECTED AT ONE END ONLY. THE OTHER END SHOULD BE CUT BACK AND INSULATED. SHIELDS FOR CABLES FROM A CABINET TO AN EXTERNAL DEVICE MUST BE CONNECTED AT CABINET END. SHIELDS FOR CABLES FROM ONE CABINET TO ANOTHER MUST BE CONNECTED AT THE SOURCE END CABINET. SPLICING OF SHIELDED CABLES, IF ABSOLUTELY NECESSARY, SHOULD BE DONE SUCH THAT SHIELD(S) REMAIN CONTINUOUS AND INSULATED FROM GROUND.
4. NO. 16 AWG WIRE IS THE MINIMUM RECOMMENDED SIZE FOR CONTROL (LEVEL 3). POWER WIRE IS SELECTED BY LOAD, USING 75 DEG C WIRE RATING (LEVELS 4 AND 4S).
5. ARMORED CABLE WITH A PVC OUTER JACKET IS REQUIRED TO PROVIDE THE NECESSARY ELECTRICAL SHIELDING FOR AC MOTOR CABLES CONNECTED TO A PWM INVERTER.
   RECOMMENDATIONS:
   METALLIC ARMOR:
   BEST PERFORMANCE: SHIELDED BELDEN CABLE PER TABLE BELOW, OR CONTINUOUS CORRUGATED ALUMINUM
   ACCEPTABLE PERFORMANCE: INTERLOCKED ALUMINUM, OR INTERLOCKED STEEL
   CONDUCTORS:
   BEST PERFORMANCE: PHASE CONDUCTORS - 3, GROUND CONDUCTORS - 3
   ACCEPTABLE PERFORMANCE: PHASE CONDUCTORS - 3, GROUND CONDUCTORS - 1
   THE CABLE CONNECTOR SELECTED MUST PROVIDE A GOOD ELECTRICAL CONNECTION BETWEEN THE ARMOR AND THE PE GROUND PLANE AT EACH END OF THE CABLE.
   SHIELDED CABLE RECOMMMENDATIONS:

BELDEN	29500	#16 AWG
BELDEN	29501	#14 AWG
BELDEN	29502	#12 AWG
BELDEN	29503	#10 AWG
BELDEN	29504	#8 AWG
BELDEN	29505	#6 AWG
BELDEN	29506	#4 AWG
BELDEN	29507	#2 AWG

   DESCRIPTION - 4 CONDUCTOR TINNED COPPER, XLPE INSULATION, 600VRMS MAX, SPECIFICALLY DESIGNED FOR IGBT DRIVE APPLICATIONS. THE SHIELD SHOULD BE CONNECTED TO THE PE GROUND PLANE
6. SEE A-B PUBLICATION AG2.2 FOR ADDITIONAL CONTROLNET COAX CABLE RECOMMENDATIONS.

SPACING NOTES:

1. BOTH OUTGOING & RETURN CURRENT CARRYING CONDUCTORS ARE TO BE PULLED IN THE SAME CONDUIT OR LAYERED ADJACENT IN CABLE TRAY.
2. ROUTE CABLES OF THE FOLLOWING LEVELS AS INDICATED:
   A. LEVELS MUST BE RUN IN SEPARATE CONDUITS OR TRAYS.
   B. INTERMIXING OF LEVELS IS NOT ALLOWED.
   C. SPECIAL LEVELS 4S AND 3S MAY EXIST THAT REQUIRE SPECIFIC WIRES TO BE GROUPED FOR SPECIAL HANDLING. NOTE: FOR LEVELS 3 AND 4, THE AMPACITY RATINGS OF CONDUCTORS IN A BUNDLE MAY NOT EXCEED THE DERATING GUIDELINES OF NEC 310.15(2), AND TABLE 310.15(B)(2)a.
   D. LEVELS 1 AND 2 MAY HAVE THEIR RESPECTIVE CIRCUITS (WITHIN A GIVEN LEVEL) PULLED IN THE SAME CONDUIT OR LAYERED ADJACENT IN THE SAME CABLE TRAY. NOTE: THE RESPECTIVE CIRCUITS IN A GIVEN BUNDLE MAY EXPERIENCE SOME AMOUNT OF EMI COUPLING. SOME CIRCUIT APPLICATIONS MAY DICTATE SEPARATE SPACING.
3. CONDUCTORS OF LEVELS 1 AND 2 MUST BE SHIELDED WHERE INDICATED PER THE RECOMMENDATIONS OR EQUIVALENT.
4. IN CABLE TRAYS, STEEL SEPARATORS ARE ADVISABLE BETWEEN THE LEVELS.
5. IF CONDUIT IS USED IT IS REQUIRED THAT IT BE CONTINUOUS AND COMPOSED OF MAGNETIC STEEL. (SEE GENERAL NOTE 1 ABOVE)
6. FOR FURTHER INFORMATION ON SPACING OF PLC COMMUNICATION CABLES TO LEVEL 4, SEE R-A PLC INSTALLATION MANUAL.
7. PER NEC ARTICLE 300-3(C)(2) , CONDUCTORS OF CIRCUITS RATED OVER 600V ARE NOT ALLOWED TO OCCUPY THE SAME CABLE, TRAY, OR CONDUIT. IT IS ACCEPTABLE FOR A TRAY TO HAVE A METAL BARRIER FOR SEPARATION.

COIL AND SOLENOID SUPPRESSION:

BEFORE UTILIZING THE CONTROL CIRCUIT POWER AVAILABLE FOR OPERATION OF CUSTOMER SUPPLIED DEVICES, THE COILS OR SOLENOIDS OF SUCH DEVICES MUST BE SUPPRESSED. THE EXTERNAL CONTROL CIRCUIT WIRING MUST BE RUN IN A SEPARATE CONDUIT THAT DOES NOT HAVE VARIABLE SIGNAL VOLTAGES OR POWER CIRCUIT VOLTAGES PRESENT. ELECTRICAL TRANSIENTS MAY CAUSE OCCASIONAL DRIVE MALFUNCTIONING.

REV.	DATE	BY	ECN/CR. NO.

Rockwell Automation

WIRE CLASIFICATION FOR
BSE / I & C SOLUTIONS
EXTRACTION WELL #7

Drawn by: JWB Date: 11/15/17

CONFIDENTIAL AND PROPRIETARY INFORMATION.
THIS DOCUMENT CONTAINS CONFIDENTIAL AND PROPRIETARY INFORMATION OF ROCKWELL AUTOMATION, INC. AND MAY NOT BE USED, COPIED OR DISCLOSED TO OTHERS, EXCEPT WITH THE AUTHORIZED WRITTEN PERMISSION OF ROCKWELL AUTOMATION, INC.

Sheet N4 OF Next Sh N5

Size D | R1USW01163 - 0001 | Ver 0

WIRE TERMINATION TORQUE VALUES

BULLETIN 1492 TERMINAL BLOCKS

PART NUMBER	TORQUE IN-LBS	TORQUE N-m	WIRE RANGE
1492-H4	7.1	0.8	30-12 AWG
1492-H5	7.1	0.8	30-12 AWG
1492-H6	7.1	0.8	30-12 AWG
1492-H7	7.1	0.8	30-12 AWG
1492-J3	4.5-7.1	0.5-0.8	22-12 AWG
1492-JD3	4.5-7.1	0.5-0.8	22-12 AWG
1492-J4	9.0	1.0	22-10 AWG
1492-JD4	4.5	0.5	26-10 AWG
1492-J6	14.2	1.6	22-8 AWG
1492-J10	20.4	2.3	18-6 AWG
1492-J16	35.0	4.0	18-6 AWG
1492-J35	51.0	5.8	12-1/0 AWG
1492-J50	31.5	3.6	10-1/0 AWG
1492-J70	87.0	9.8	6-2/0 AWG
1492-J120	141.6	16.0	4-250MCM AWG
1492-JG3	7.1	0.8	22-12 AWG
1492-JG4	9.0	1.0	22-10 AWG
1492-JG6	14.2	1.6	22-8 AWG
1492-JG10	20.4	2.3	16-6 AWG
1492-JG16	35.0	4.0	24-4 AWG
1492-JG35	51.0	5.8	12-1 AWG
1492-JG50	31.5	3.6	10-1/0 AWG
1492-JG70	87.0	9.8	6-2/0 AWG
1492-JG120	88.5	10	4-3/0 AWG

BULLETIN 1492 FUSE BLOCKS

PART NUMBER	TORQUE IN-LBS	TORQUE N-m	WIRE RANGE
1492-FB1C30 (-L)	22	2.5	18-8 AWG
1492-FB1C30 (-L)	26	2.5	6-4 AWG
1492-FB2C30 (-L)	22	2.5	18-8 AWG
1492-FB2C30 (-L)	26	2.5	6-4 AWG
1492-FB3C30 (-L)	22	2.5	18-8 AWG
1492-FB3C30 (-L)	26	2.5	6-4 AWG
1492-FB1M30 (-L)	22	2.5	18-8 AWG
1492-FB1M30 (-L)	26	2.5	6-4 AWG
1492-FB2M30 (-L)	22	2.5	18-8 AWG
1492-FB2M30 (-L)	26	2.5	6-4 AWG
1492-FB3M30 (-L)	22	2.5	18-8 AWG
1492-FB3M30 (-L)	26	2.5	6-4 AWG
1492-FB1J30 (-L)	35	4	18-1 AWG
1492-FB2J30 (-L)	35	4	18-1 AWG
1492-FB3J30 (-L)	35	4	18-1 AWG
1492-FB1J60 (-L)	35	4	14-1 AWG
1492-FB2J60 (-L)	35	4	14-1 AWG
1492-FB3J60 (-L)	35	4	14-1 AWG

BULLETIN 100 CONTACTORS

PART NUMBER	TORQUE IN-LBS	TORQUE N-m	WIRE RANGE
100-C09	13-22	1.5-2.5	(2) 16-10 AWG
100-C12	13-22	1.5-2.5	(2) 16-10 AWG
100-C16	13-22	1.5-2.5	(2) 16-10 AWG
100-C23	13-22	1.5-2.5	(2) 16-10 AWG
100-C30	22-31	2.5-3.5	14-6 AWG
100-C37	22-31	2.5-3.5	14-6 AWG
100-C43	22-31	2.5-3.5	14-6 AWG
100-C60	40-53	4.5-6.0	14-1 AWG
100-C72	40-53	4.5-6.0	14-1 AWG
100-C85	40-53	4.5-6.0	14-1 AWG
100-C97	40-53	4.5-6.0	14-1 AWG

BULLETIN 140G CIRCUIT BREAKERS

PART NUMBER	TORQUE IN-LBS	TORQUE N-m	WIRE RANGE
140G-G-TLC1_	62	7.0	(1) 14-1/0 AWG
140G-G-MTL6_	62	7.0	(6) 14-2 AWG
140G-H-TLC1_	62	7.0	(1) 14-1/0 AWG
140G-H-MTL6_	62	7.0	(6) 14-2 AWG
140G-I-TLA1_	50	5.6	(1) 14-1/0 AWG
140G-I-TLA1A_	200	22.6	(1) 4-300 MCM AWG
140G-I-TLC1_	124	14.0	(1) 10-250 MCM AWG
140G-I-MTL6_	62	7.0	(6) 12-2 AWG
140G-J-TLA1_	50	5.6	(1) 14-1/0 AWG
140G-J-TLA1A_	200	22.6	(1) 4-300 MCM AWG
140G-J-TLC1_	124	14.0	(1) 10-250 MCM AWG
140G-J-MTL6_	62	7.0	(6) 12-2 AWG
140G-K-TLA1_	380	43	(1) 250-500 MCM AWG
140G-K-TLA2_	380	43	(2) 2/0-250 MCM AWG
140G-K-TLC1_	380	43	(1) 250-500 MCM AWG
140G-K-TLC2_	380	43	(2) 2/0-250 MCM AWG
140G-K-MTL6_	62	7	(6) 6-1/0 AWG
140G-M-TLA2_	274	31	(2) 250-500 MCM AWG
140G-M-TLA3_	380	43	(3) 2/0-400 MCM AWG
140G-M-TLC2_	274	31	(2) 3/0-350 MCM AWG
140G-M-TLC3_	380	43	(3) 2/0-350 MCM AWG
140G-N-TLA4_	380	43	(4) 4/0-500 MCM AWG
140G-N-TLC4_	380	43	(4) 4/0-500 MCM AWG

'_' IS EITHER 3 OR 4 DEPENDING ON HOW MANY POLES THE BREAKER HAS

BULLETIN 194R TERMINAL LUGS

PART NUMBER	TORQUE IN-LBS	TORQUE N-m	WIRE RANGE
194R-30-MTL3	14	1.6	14-8 AWG
194R-60-MTL3	24	2.8	14-4 AWG
194R-TL1	275	31	6-300 MCM AWG
194R-TL2	275	31	6-300 MCM AWG
194R-TL3	550	62	4-600 MCM AWG
194R-TL4	550	62	4-600 MCM AWG
194R-TL5	200	22.6	6-2 AWG
194R-TL6	375	42.4	1-350 MCM AWG
194R-TL7	375	42.4	2-600 MCM AWG
194R-TL8	375	42.4	2-600 MCM AWG
194R-TL9	375	42.4	2-600 MCM AWG
194R-TL10	375	42.4	2-600 MCM AWG

BULLETIN 1489-M CIRCUIT BREAKERS

PART NUMBER	TORQUE IN-LBS	TORQUE N-m	WIRE RANGE
1489-M_	13.3	1.5	18-16 AWG
1489-M_	17.7	2	14-10 AWG
1489-M_	39.8	4.5	8-4 AWG

BULLETIN 1321 OPEN REACTORS

PART NUMBER	TORQUE IN-LBS	TORQUE N-m	WIRE RANGE
1321-3R1-A	4.5	0.51	22-14 AWG
1321-3R1-B	4.5	0.51	22-14 AWG
1321-3R1-C	4.5	0.51	22-14 AWG
1321-3R2-A	4.5	0.51	22-14 AWG
1321-3R2-B	4.5	0.51	22-14 AWG
1321-3R2-C	4.5	0.51	22-14 AWG
1321-3R4-A	4.5	0.51	22-14 AWG
1321-3R4-B	4.5	0.51	22-14 AWG
1321-3R4-C	4.5	0.51	22-14 AWG
1321-3R8-A	4.5	0.51	22-14 AWG
1321-3R8-B	4.5	0.51	22-14 AWG
1321-3R8-C	4.5	0.51	22-14 AWG
1321-3R12-A	16	1.81	22-6 AWG
1321-3R12-B	16	1.81	22-6 AWG
1321-3R12-C	16	1.81	22-6 AWG
1321-3R18-A	16	1.81	22-6 AWG
1321-3R18-B	16	1.81	22-6 AWG
1321-3R18-C	16	1.81	22-6 AWG
1321-3R25-A	16	1.81	22-6 AWG
1321-3R25-B	16	1.81	22-6 AWG
1321-3R25-C	16	1.81	22-6 AWG
1321-3R35-A	16	1.81	22-6 AWG
1321-3R35-B	16	1.81	22-6 AWG
1321-3R35-C	20	2.26	18-4 AWG
1321-3R45-A	20	2.26	18-4 AWG
1321-3R45-B	20	2.26	18-4 AWG
1321-3R45-C	20	2.26	18-4 AWG
1321-3R55-A	45	5.09	6-1/0 AWG
1321-3R55-B	45	5.09	6-1/0 AWG
1321-3R55-C	45	5.09	6-1/0 AWG
1321-3R80-A	45	5.09	6-1/0 AWG
1321-3R80-B	45	5.09	6-1/0 AWG
1321-3R80-C	45	5.09	6-1/0 AWG
1321-3R100-A	150	16.95	2-4/0 AWG
1321-3R100-B	150	16.95	2-4/0 AWG
1321-3R100-C	150	16.95	2-4/0 AWG
1321-3R130-A	150	16.95	2-4/0 AWG
1321-3R130-B	150	16.95	2-4/0 AWG
1321-3R130-C	150	16.95	2-4/0 AWG
1321-3R160-A	150	16.95	2-4/0 AWG
1321-3R160-B	150	16.95	2-4/0 AWG
1321-3R160-C	150	16.95	2-4/0 AWG

POWERFLEX 750 SERIES AC DRIVES POWER TERMINAL BLOCKS

FRAME SIZE	TORQUE IN-LBS	TORQUE N-m	WIRE RANGE
1,2	5	0.57	24-10 AWG
3	10.6	1.2	20-6 AWG
4	24	2.7	14-3 AWG
5	35	4.0	8-1 AWG
6	100	11.3	M8 x 1.25STUD
7	100	11.3	M8 x 1.25STUD

BULLETIN 1494R TERMINAL LUGS

PART NUMBER	TORQUE IN-LBS	TORQUE N-m	WIRE RANGE
1494R-N1	45	5.09	14-4 AWG
1494R-N2	150	16.95	8-1/0 AWG
1494R-N3	275	31	6-4/0 AWG
1494R-N10	325	36.72	(2) 1/0-350 AWG
1494R-N11	325	36.72	(2) 1/0-350 AWG
1494R-N12	375	42.37	1/0-500 AWG
1494R-N14	303	34.23	(2) 1/0-250 AWG
1494R-N15	415	46.89	4-500 AWG

BULLETIN 199 TERMINAL LUGS

PART NUMBER	TORQUE IN-LBS	TORQUE N-m	WIRE RANGE
199-LE1	150	16.9	8-1/0 AWG
199-LF1	275	31	6-250MCM AWG
199-LG1	375	42	4-500MCM AWG
199-LH1	275	31	1/0-350MCM AWG
199-LJ1	275	31	1/0-500MCM AWG

BULLETIN 100 TERMINAL LUGS

PART NUMBER	TORQUE IN-LBS	TORQUE N-m	WIRE RANGE
100-DL110	70-90	8.0-10	14-2/0 AWG
100-DLE110	70-90	8.0-10	8-2/0 AWG
100-DL180	90-110	10-12	6-300MCM AWG
100-DL420	375	42	4-350MCM AWG
100-DL630	400	45	2/0-500MCM AWG
100-DL860	400	45	2/0-500MCM AWG

HOFFMAN GROUND BAR

PART NUMBER	TORQUE IN-LBS	TORQUE N-m	WIRE RANGE
P-GS2K	40	4.5	- AWG
P-GS4K	40	4.5	- AWG
P-GS6K	40	4.5	- AWG

BURNDY GROUND LUGS

PART NUMBER	TORQUE IN-LBS	TORQUE N-m	WIRE RANGE
KPA8CTP	12	1.36	14-6 AWG
KA26U	120	13.6	6-2/0 AWG
KA31U	375	42.4	6-350MCM AWG
KA34U	500	56.5	4-500MCM AWG

USE COPPER, 60°C WIRE IF RATED LESS THAN 100 AMPS
OR 75°C WIRE IF RATED 100 AMPS OR MORE

DATE	BY	APPROVAL
11/17/17	MW	DESIGN REVIEW
11/20/17	JWB	FOR MANUFACTURING
		AS SHIPPED
		AS COMMISSIONED

REV.	DATE	BY	ECN/CR. NO.

Rockwell Automation

TORQUE VALUES FOR
BSE / I & C SOLUTIONS
EXTRACTION WELL #7

Drawn by: JWB | Date: 11/15/17

CONFIDENTIAL AND PROPRIETARY INFORMATION.
THIS DOCUMENT CONTAINS CONFIDENTIAL AND PROPRIETARY INFORMATION OF ROCKWELL AUTOMATION, INC. AND MAY NOT BE USED, COPIED OR DISCLOSED TO OTHERS, EXCEPT WITH THE AUTHORIZED WRITTEN PERMISSION OF ROCKWELL AUTOMATION, INC.

Sheet N5 Of Next Sh 5

Size D | R1USW01163 - 0001 | Ver 0

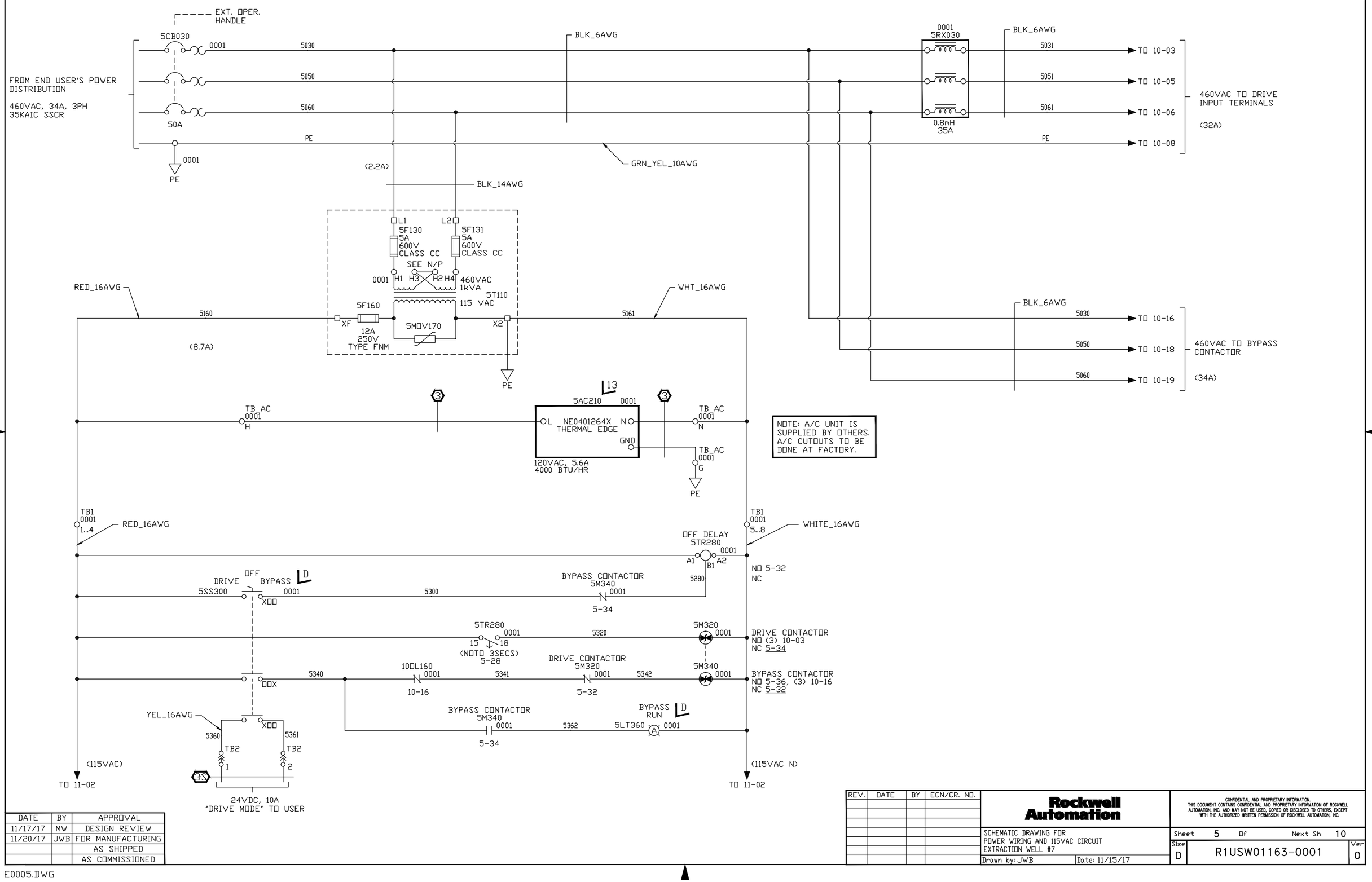

DATE	BY	APPROVAL
11/17/17	MW	DESIGN REVIEW
11/20/17	JWB	FOR MANUFACTURING
		AS SHIPPED
		AS COMMISSIONED

REV.	DATE	BY	ECN/CR. NO.

Rockwell Automation

SCHEMATIC DRAWING FOR
POWER WIRING AND 115VAC CIRCUIT
EXTRACTION WELL #7

Drawn by: JWB | Date: 11/15/17

CONFIDENTIAL AND PROPRIETARY INFORMATION.
THIS DOCUMENT CONTAINS CONFIDENTIAL AND PROPRIETARY INFORMATION OF ROCKWELL AUTOMATION, INC. AND MAY NOT BE USED, COPIED OR DISCLOSED TO OTHERS, EXCEPT WITH THE AUTHORIZED WRITTEN PERMISSION OF ROCKWELL AUTOMATION, INC.

Sheet 5 Of Next Sh 10

Size D | R1USW01163-0001 | Ver 0

E0005.DWG

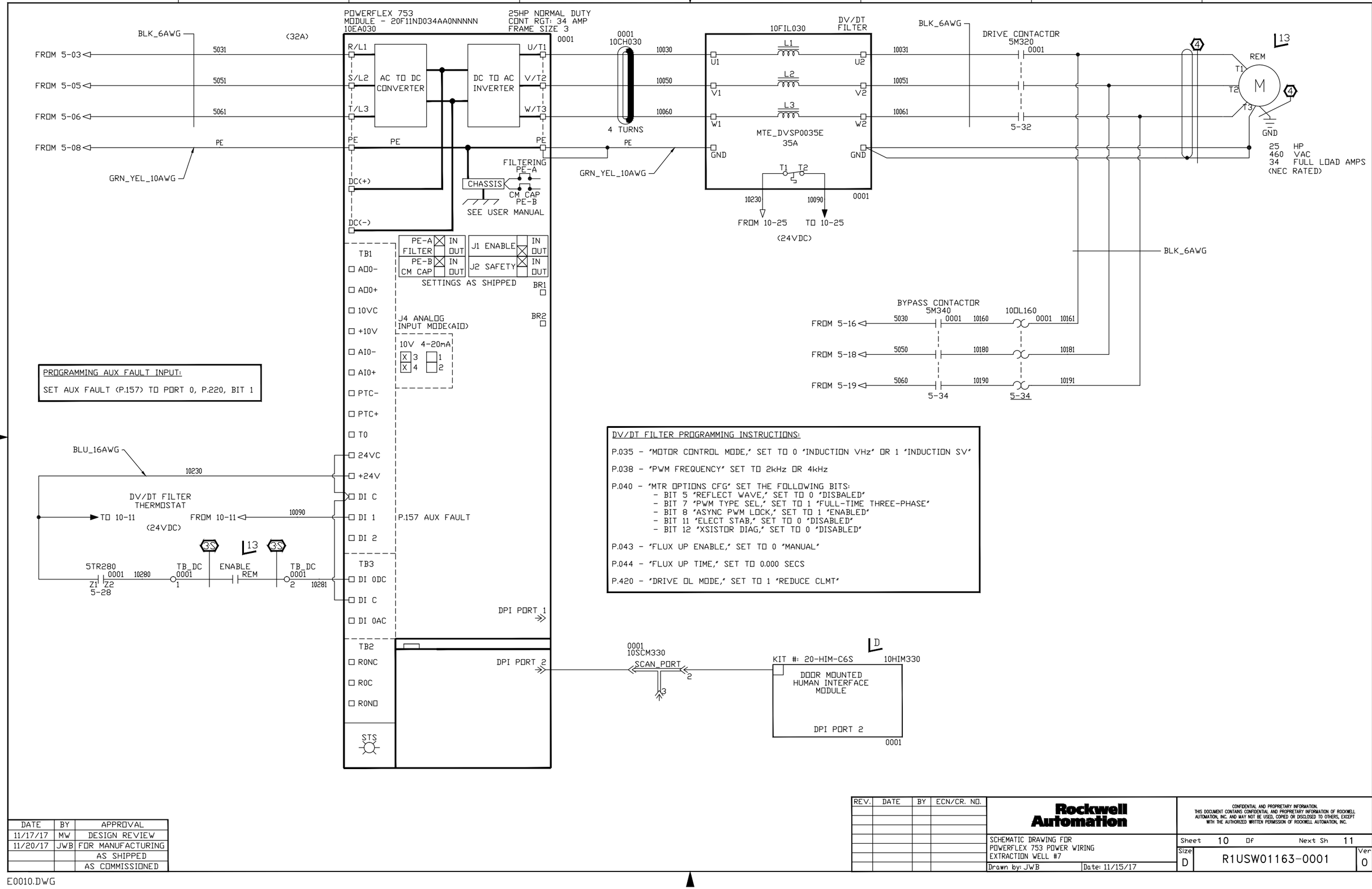

DATE	BY	APPROVAL
11/17/17	MW	DESIGN REVIEW
11/20/17	JWB	FOR MANUFACTURING
		AS SHIPPED
		AS COMMISSIONED

REV.	DATE	BY	ECN/CR. NO.

Rockwell Automation

CONFIDENTIAL AND PROPRIETARY INFORMATION.
THIS DOCUMENT CONTAINS CONFIDENTIAL AND PROPRIETARY INFORMATION OF ROCKWELL AUTOMATION, INC. AND MAY NOT BE USED, COPIED OR DISCLOSED TO OTHERS, EXCEPT WITH THE AUTHORIZED WRITTEN PERMISSION OF ROCKWELL AUTOMATION, INC.

SCHEMATIC DRAWING FOR
POWERFLEX 753 POWER WIRING
EXTRACTION WELL #7

Drawn by: JWB | Date: 11/15/17

Sheet 10 Of Next Sh 11

Size D | R1USW01163-0001 | Ver 0

E0010.DWG

H-O-A SWITCH OPERATION:
HAND MODE: DRIVE WILL START AND RECEIVE SPEED REFERENCE FROM DOOR MOUNTED HIM (PORT 2)

AUTO MODE: DRIVE WILL START ONCE REMOTE CONTACT IS CLOSED AND WILL RECEIVE SPEED REFERENCE FROM PLC THROUGH ANALOG INPUT 0 ON PORT 4

PROGRAMMING H-O-A OPERATION:
SET SPD REF A (P.545) TO PORT 2, DOOR MOUNTED HIM
SET SPD REF B (P.550) TO PORT 4, P.50 "ANLG IN0 VALUE"
SET STOP (P.158) TO PORT 4, P.1 BIT 0
SET HOA START (P.176) TO PORT 4, P.1 BIT 1
SET SPD SEL 1 (P.174) TO PORT 4, P.1 BIT 3

PROGRAMMING DIGITAL OUTPUT FUNCTIONS:
DRIVE FAULT: SET RO0 SEL (PORT 4, P.10) TO DRIVE STS 1, PORT 0, P.935 BIT 7

DRIVE RUNNING: SET RO1 SEL (PORT 4, P.20) TO DRIVE STS 1, PORT 0, P.935 BIT 16

BLU_16AWG
11050
HAND OFF AUTO
11SS070
0001
XOX
11070
FAULT 11CR090
0001
11-09
11071
11PB070
STOP
0001
11072
START
11090
11PB090
0001
11091
XOO
TB_DC 0001 3
START
REM
TB_DC 0001 4
11110
OOX
YEL_16AWG
OOX
11150
TB2 3
11151
TB2 4
3S
24VDC, 10A
"AUTO MODE" TO USER

10EA030 - PORT 4 0001
24VDC
20-750-2262C-2R
TB1 +24V
24VDC INPUTS
TB1 DI 0
P.158 STOP
TB1 DI 1
P.176 HOA START
TB1 DI 2
TB1 DI 3
P.174 SPD SEL 1
TB1 DI 4
TB1 DI 5
TB1 DI C
TB1 24VC
TB1 +10V
TB1 10VC
TB1 -10V
TB1 AI0+ ANALOG INPUT 0
TB1 AI0-
TB1 AI1+ ANALOG INPUT 1
TB1 AI1-
AI0-JMPR
CURRENT
VOLTAGE
AI1-JMPR
CURRENT
VOLTAGE
SEE PUBLICATION POWERFLEX 750 USER MANUAL
TB1 SHD
TB1 SHD

SHLD
2
SHLD
SPEED REFERENCE 4-20mA FROM PLC
TB_SIG 1
11240
TB_SIG 2
11250
TB_SIG SH1
BELDEN 8760

TB2 R0C
TB2 R0NC
TB2 R0NO
P.935 FAULTED
TB2 R1C
TB2 R1NC
TB2 R1NO
P.935 RUNNING
TB1 PTC+
TB1 PTC-
TB1 AO0+
ANALOG OUTPUT 0
TB1 AO0-
TB1 AO1+
ANALOG OUTPUT 1
TB1 AO1-

FROM 5-38 (115VAC)
5160
RED_16AWG
11060
FROM 5-38 (115VAC N)
5161
WHT_16AWG
11123

FAULT
11LT060 R 0001
11CR090 0001
FAULT NO 11-06 NC 11-06,11-07

RUNNING
11LT120 G 0001
11CR150 0001
RUNNING NO 11-12 NC 11-12

FAULT 11CR090 0001
FAULT 11CR090 0001
11-09
11-09
11061
11062
11063
YEL_16AWG
TB2 5
TB2 6
TB2 7
3S
DRIVE FAULT, 10A, 24VDC

RUNNING 11CR150 0001
RUNNING 11CR150 0001
11-15
11-15
11120
11121
11122
YEL_16AWG
TB2 8
TB2 9
TB2 10
3S
DRIVE RUNNING, 10A, 24VDC

DATE	BY	APPROVAL
11/17/17	MW	DESIGN REVIEW
11/20/17	JWB	FOR MANUFACTURING
		AS SHIPPED
		AS COMMISSIONED

REV.	DATE	BY	ECN/CR. NO.

Rockwell Automation

SCHEMATIC DRAWING FOR
24VDC I/O WIRING
EXTRACTION WELL #7
Drawn by: JWB Date: 11/15/17

CONFIDENTIAL AND PROPRIETARY INFORMATION.
THIS DOCUMENT CONTAINS CONFIDENTIAL AND PROPRIETARY INFORMATION OF ROCKWELL AUTOMATION, INC. AND MAY NOT BE USED, COPIED OR DISCLOSED TO OTHERS, EXCEPT WITH THE AUTHORIZED WRITTEN PERMISSION OF ROCKWELL AUTOMATION, INC.

Sheet 11 Of Next Sh L1
Size D
R1USW01163-0001
Ver 0

E0011.DWG

TOP VIEW

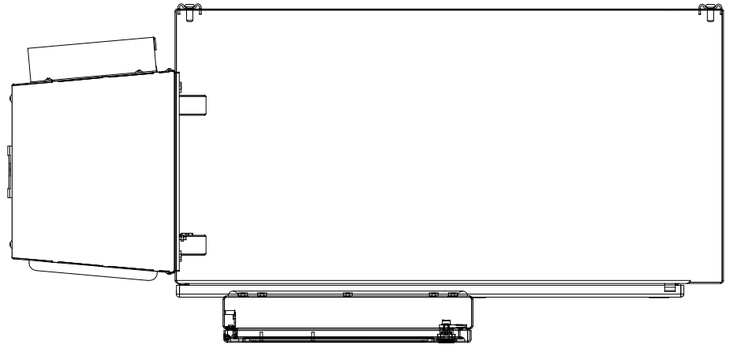

STAINLESS STEEL ENCLOSURE
HOFFMAN N4X WALLMOUNT
42"(H) X 32"(W) X 16"(D)
- NEMA STYLE DISCONNECT
- STAINLESS STEEL A/C COOLING (PROVIDED BY OTHERS)
- STAINLESS STEEL WINDOW KIT
- UV FILM PROTECTION FOR HMI
- MOUNTING BRACKETS INCLUDED

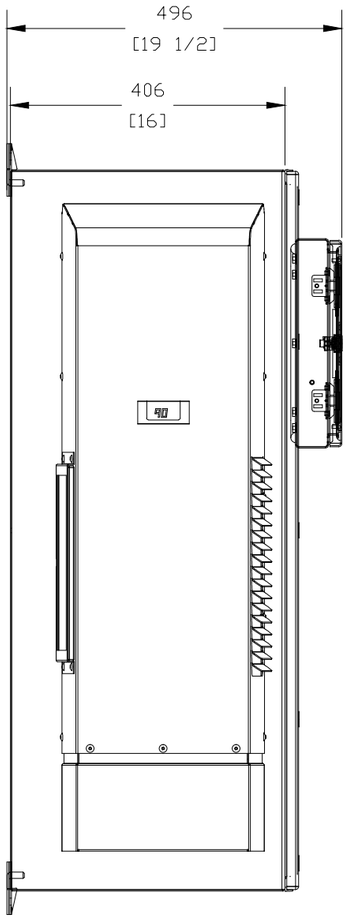

LEFT SIDE

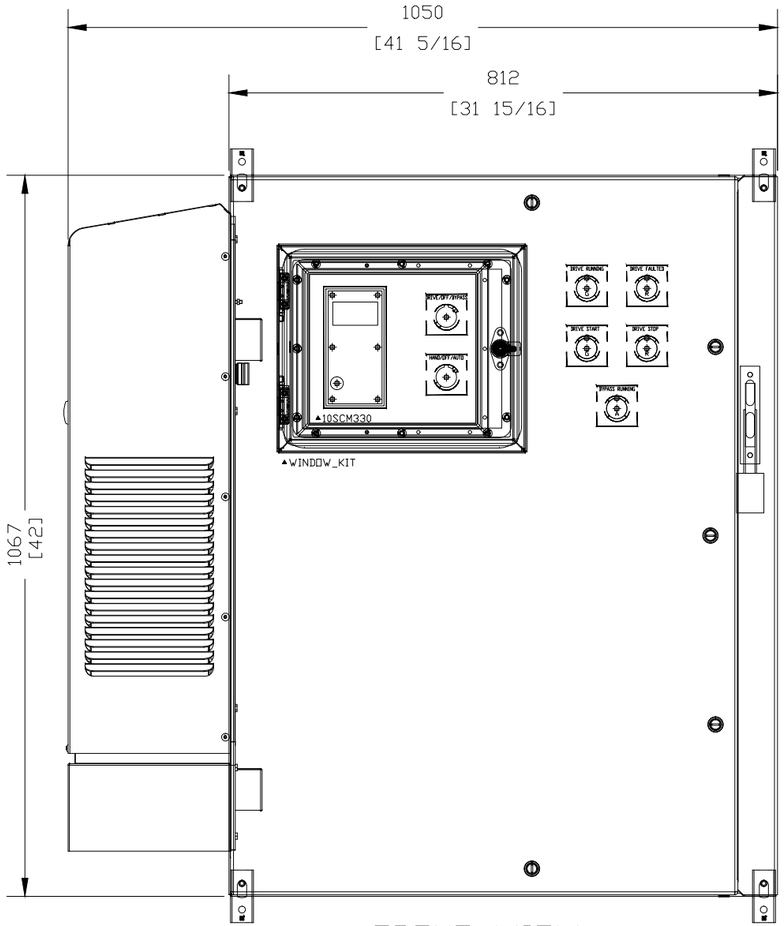

FRONT VIEW

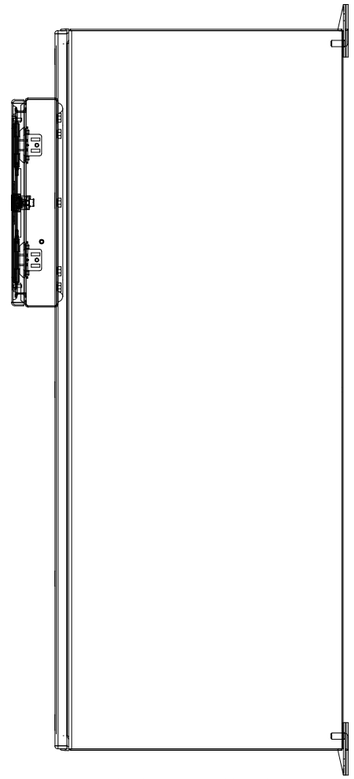

RIGHT SIDE

DATE	BY	APPROVAL
11/17/17	MW	DESIGN REVIEW
11/20/17	JWB	FOR MANUFACTURING
		AS SHIPPED
		AS COMMISSIONED

REV.	DATE	BY	ECN/CR. NO.

Rockwell Automation

LAYOUT DRAWING FOR
ENCLOSURE SIZE AND DIMENSIONS
EXTRACTION WELL #7

Drawn by: JWB | Date: 11/15/17

CONFIDENTIAL AND PROPRIETARY INFORMATION.
THIS DOCUMENT CONTAINS CONFIDENTIAL AND PROPRIETARY INFORMATION OF ROCKWELL AUTOMATION, INC. AND MAY NOT BE USED, COPIED OR DISCLOSED TO OTHERS, EXCEPT WITH THE AUTHORIZED WRITTEN PERMISSION OF ROCKWELL AUTOMATION, INC.

Sheet L1 Of Next Sh L2

Size D | R1USW01163-0001 | Ver 0

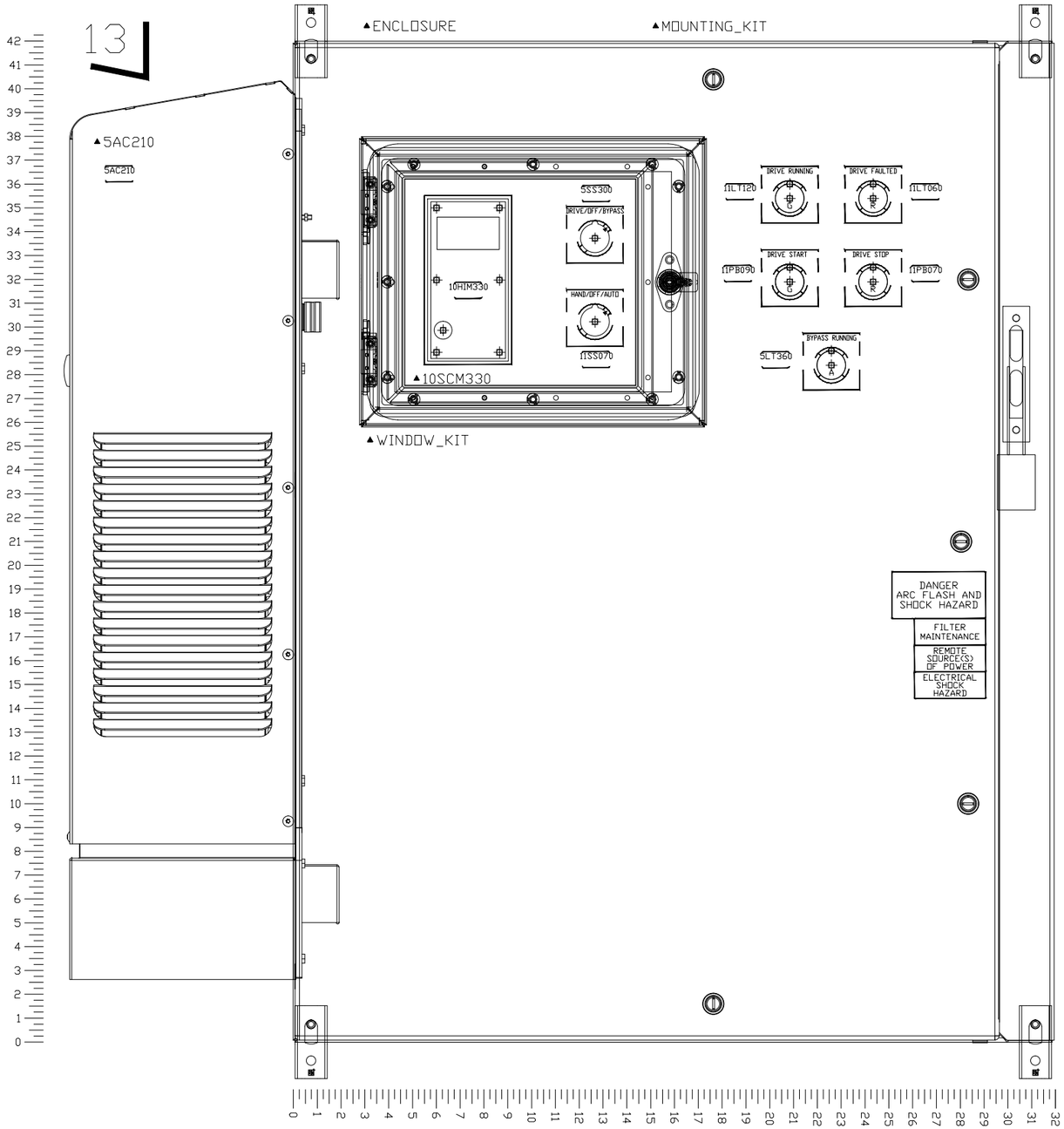

NOTES FOR MFG:
- APPLY UV FILM TO WINDOW KIT

- CUTOUTS FOR A/C UNIT

NAMEPLATE

Rockwell Automation

PROJECT#: R1USW01163 - 0001

DIAGRAM: R1USW01163-0001
INPUT 480VAC 34 AMPS 3PH 60Hz
OUTPUT 480VAC 34 AMPS
LARGEST MOTOR: 25HP, 34 AMPS
SHORT CIRCUIT CURRENT RATING:
100 KA RMS. SYMMETRICAL, 480 VOLTS MAXIMUM
ENCLOSURE RATING: TYPE 4X

Drive Systems, Golden, CO 80403 USA

VFD AC is an after-market upgrade.
Please see cutouts for location of AC unit.

DATE	BY	APPROVAL
11/17/17	MW	DESIGN REVIEW
11/20/17	JWB	FOR MANUFACTURING
		AS SHIPPED
		AS COMMISSIONED

REV.	DATE	BY	ECN/CR. NO.

Rockwell Automation

LAYOUT DRAWING FOR
ENCLOSURE DOOR AND DEVICES
EXTRACTION WELL #7

Drawn by: JWB | Date: 11/15/17

CONFIDENTIAL AND PROPRIETARY INFORMATION.
THIS DOCUMENT CONTAINS CONFIDENTIAL AND PROPRIETARY INFORMATION OF ROCKWELL AUTOMATION, INC. AND MAY NOT BE USED, COPIED OR DISCLOSED TO OTHERS, EXCEPT WITH THE AUTHORIZED WRITTEN PERMISSION OF ROCKWELL AUTOMATION, INC.

Size D | R1USW01163-0001 | Ver 0

▲PANEL

10EA030

FRAME SIZE 3

TORQUE: 10.6 LB-IN (1.2 N-M)
WIRE RANGE:6-20AWG(16-0.5MM)

PE PE- PE- R L1 S L2 T L3 BR1 BR2 + DC - DC U T1 V T2 W T3

POWER I/O

PE PE

PNL_CHAN_1.5
PNL_CHAN_1.5_CVR

ST110

5F130 5A,600V CLASS CC

N/A H1 H2 H3 H4 N/A

▲5F130
▲5F131
▲5F160

▲5M□V170

N/A X4 X2 X3 X1 N/A

5F131 5A,600V CLASS CC

5F160 12A,250V TYPE FNM

691-XG

PE

5CB030

PNL_CHAN_1.0
PNL_CHAN_1.0_CVR

TB_AC TB1 5TR280 1CR090 1CR150

691-XG

▲TB_AC ▲TB1

PNL_CHAN_1.0
PNL_CHAN_1.0_CVR

TB2 TB_DC TB_SIG

▲TB2 ▲TB_DC ▲TB_SIG

5LR030

LABEL

10CH030

5M320 5M340

▲5M320 ▲5M340

10FIL030

PRODUCT

REACTOR

10DL160

DETAIL FOR
DRIVE_CONTROL_POD

20-750-2262C-2R

I/O OPTION

6 5 4

DATE	BY	APPROVAL
11/17/17	MW	DESIGN REVIEW
11/20/17	JWB	FOR MANUFACTURING
		AS SHIPPED
		AS COMMISSIONED

REV.	DATE	BY	ECN/CR. NO.

Rockwell Automation

LAYOUT DRAWING FOR
PANEL AND COMPONENTS
EXTRACTION WELL #7

Drawn by: JWB Date: 11/15/17

CONFIDENTIAL AND PROPRIETARY INFORMATION.
THIS DOCUMENT CONTAINS CONFIDENTIAL AND PROPRIETARY INFORMATION OF ROCKWELL AUTOMATION, INC. AND MAY NOT BE USED, COPIED OR DISCLOSED TO OTHERS, EXCEPT WITH THE AUTHORIZED WRITTEN PERMISSION OF ROCKWELL AUTOMATION, INC.

Sheet L3 Of Next Sh END

Size D | R1USW01163-0001 | Ver 0

PF753 25HP ND N3R

One NEMA 3R Hoffman WeatherFlo Enclosure, approximately 47"H X 24"W X 14"D, with the following features:

☐ Qty. 1- PowerFlex 753 Drive w/ Embedded I/O, 480 VAC, 3 Phase, 34 Amps, 25 HP Normal Duty, 6 Pulse, w/DC Terminals, With Filtering/Jumper Removed, With Internal Transistor, w/o Internal Resistor

☐ Qty. 1- PF750 24V DC I/O Option Module

☐ Qty. 1- Input Circuit Breaker Disconnect (Input Thermal Magnetic breaker, 35KAIC, note does not necessarily reflect panel SCCR rating)

☐ Qty. 1- Input Line Reactor, 3%

☐ Qty. 1- dv/dt Output Filter

☐ Qty. 1- 2 Contactor Bypass (IEC style)

☐ Qty. 1- Control Power Transformer, Fused Primary/Secondary

☐ Qty. 1- Door-Mounted HIM w/ Cover

☐ Qty. 1- Door-Mounted Start Push Button (800H style, wired to drive input)

☐ Qty. 1- Door-Mounted Stop Push Button (800H style, wired to drive input)

☐ Qty. 1- Door-Mounted Run Pilot Light (Green 800H LED style.

☐ Qty. 1- Door-Mounted Fault Pilot Light (Red 800H LED style.)

☐ Qty. 1- Door-Mounted Bypass Run Pilot Light (Amber 800H LED style.)

☐ Qty. 1- Door-Mounted Hand/Off/Auto Selector Switch (800H style.)

☐ Qty. 1- Door-Mounted Drive/Off/Bypass Selector Switch (800H style.)

TRANSMITTAL DOCUMENT

Date:	**10/2/2017**	**From:**	**Ed Butler**
To:	**EA Engineering, Science, and Technology, Inc., 320 Gold Ave. SW, Suite 1300 Albuquerque, NM 87102 Devon Jercinovic**	**Job Name:**	**Kirtland AFB, NM Bulk Fuels Facility**
		Reference:	
		Transmittal Method:	**E-mail**
		Sent By:	**Ed Butler**

Submittal	Dwg. Number	Item Description
8	E-701	Well 106239 VFD

Ed Butler
TECHSAS, Inc.
4819 West Bayshore Drive
Bacliff, TX 77518

"I hereby certify that the (equipment) (material) (article) shown and marked in this submittal is that proposed to be incorporated with the Contract, is in compliance with the contract drawings and specification, can be installed in the allocated spaces, and is submitted for Contractor approval.

Certified by _____.
(Signature when applicable) Date: _____.

PowerFlex® 750-Series AC Drives

Allen-Bradley

Designed for Ease of Use, Integration and Application Flexibility

LISTEN.
THINK.
SOLVE.®

Allen-Bradley • Rockwell Software

Rockwell Automation

Technical Data

Allen-Bradley

PowerFlex 753 and PowerFlex 755 Pre-Engineered FasTrac Packaged Drives

Catalog Numbers 24F, 24G

24F1AHD248AA6NNNNN-ND-B1-C1-F0-IN-L1-L2-MN-P4 Shown

LISTEN. THINK. SOLVE.®

Table of Contents

Topic	Page
Additional Resources	4
Product Overview	4
Catalog Number Explanation	5
PowerFlex 750-Series Drives Pre-engineered FasTrac	5
Additional Catalog Number Notes	8
Specifications	9
Short Circuit Current Rating	9
Duty Cycle	10
Ambient Temperature Rating	10
Options	11
Sample Power Distribution Schemes	11
Power Disconnect	12
Control Power	12
Output Devices	12
Bypass	12
Operator Devices	13
Power Conditioning	14
Agency Certification - Codes and Standards	15
Drawings	15
Enclosure Information	15
Guidelines	15
Approximate Dimensions	15

Additional Resources

These documents contain additional information concerning related products from Rockwell Automation.

Resource	Description
PowerFlex® 750-Series AC Drives Technical Data, publication 750-TD001	Provides detailed information on: • Drive specifications • Option specifications • Fuse and circuit breaker ratings
PowerFlex 750-Series AC Drives Installation Instructions, publication 750-IN001	Provides steps for mechanical installation and for connecting incoming power, the motor, and basic I/O to the PowerFlex 750-Series Adjustable Frequency AC drive.
PowerFlex 750-Series AC Drives Programming Manual, publication 750-PM001	Provides detailed information on: • I/O, control, and feedback options • Parameters and programming • Faults, alarms, and troubleshooting
Wiring and Grounding Guidelines for Pulse Width Modulated (PWM) AC Drives, publication DRIVES-IN001	Provides basic information needed to properly wire and ground PWM AC drives.
Preventive Maintenance of Industrial Control and Drive System Equipment, publication DRIVES-TD001	Provides a guide to performing preventive maintenance.
Safety Guidelines for the Application, Installation and Maintenance of Solid State Control, publication SGI-1.1	Provides general guidelines for the application, installation, and maintenance of solid-state control.
Product Certifications website, http://www.ab.com	Provides declarations of conformity, certificates, and other certification details.

You can view or download publications at http://www.rockwellautomation.com/literature/. To order paper copies of technical documentation, contact your local Allen-Bradley distributor or Rockwell Automation sales representative.

Product Overview

Rockwell Automation PowerFlex® 753 and 755 drives are now available in a Pre-Engineered FasTrac Packaged Drive program. The Pre-engineered FasTrac Packaged Drives program provides PowerFlex 750-Series drives packaged with a much larger offering of factory mounted options than what is normally available with a standard drive product. The Pre-engineered FasTrac program lets you receive packaged PowerFlex 753 and 755 drives in as little as 20 business days.

The Pre-engineered FasTrac program is a separate, centrally managed program. It combines the capabilities of Rockwell Automation Low Voltage Drives with the Local Solution Centers. As orders are received, they are immediately released to a manufacturing location based on capacity.

Benefits:

- Proven, tested design
- Quality drives
- Quick turnaround
- Pre-engineered packages to ensure sizing, wiring, and calculations
- Meets CSA requirements
- Available in an assortment of environmental protection enclosures - NEMA 1, 12, or 3R

This document contains information related to the Rockwell Automation PowerFlex 750-Series Pre-Engineered FasTrac Packaged Drives program and is intended to provide drive catalog numbers, specifications, options and accessories, enclosures, and dimension information.

IMPORTANT While this information may be useful in specifying an application of a Pre-Engineered FasTrac Packaged PowerFlex 750-Series AC drive, be advised that this information is for Reference Only and subject to change at any time.

Catalog Number Explanation

PowerFlex 750-Series Drives Pre-engineered FasTrac

Contact your Rockwell Automation representative for product option rules.

Position

1…3	*4*	*5*	*6*	*7*	*8…10*	*11*	*12*	*13*	*14*	*15*	*16*	*17*	*18…19*
24G	**1**	**1**	**R**	**D**	**096**	**A**	**A**	**0**	**N**	**N**	**N**	**N**	**- ND**
a		*b*	*c*	*d*	*e*	*f*	*g*		*h*	*i*	*j*	*k*	*l*

a

Drive

Code	Type
24F	PF753
24G	PF755

b

Input Type

Code	Type
1	AC & DC Input with Precharge
A	AC Input w/ Precharge, no DC Terminals

c

Enclosure Type and Conformal Coating

Code	Encl. Rating	Encl. Style	Conf. Coating
R	Type 3R	Single Drive	Yes
A	Type 1	Single Drive	Yes
H	Type 12 (F&F)	Single Drive	Yes
S	Frame 1 Type 3R	Single Drive	Yes
I	Frame 1 Type 1	Single Drive	Yes
J	Frame 1 Type 12 (F&F)	Single Drive	Yes

d

Version and Voltage Rating

Code	Input Voltage	Source Type	DC Precharge
D	480 VAC	3 Phase	No
E	600 VAC	3 Phase	No

e

Output Amps, Hp Ratings @ 480V AC Input

Code	Amps	ND Hp	HD Hp	Frame Size
2P1	2.1	1	0.75	1 or 2
3P4	3.4	2	1.5	1 or 2
5P0	5	3	3	1 or 2
8P0	8	5	5	1 or 2
11	11	7.5	5	1 or 2
14	14	10	7.5	1 or 2
22	22	15	10	2
27	27	20	15	3
34	34	25	20	3
40	40	30	25	3
52	52	40	30	4
65	65	50	40	4
77	77	60	50	5
96	96	75	60	5
125	125	100	75	6
156	156	125	100	6
186	186	150	125	6
248	248	200	150	6
302	302	250	200	7
361	361	300	250	7
415	415	350	300	7

Catalog Number Explanation, Continued

e (cont'd)

Output Amps, Hp Ratings @ 600V AC Input

Code	Amps	ND Hp	HD Hp	Frame Size
1P7	1.7	1		3
2P7	2.7	2	1	3
3P9	3.9	3	2	3
6P1	6.1	5	3	3
009	9	7.5	5	3
011	11	10	7.5	3
017	17	15	10	3
022	22	20	15	3
027	27	25	20	4
032	32	30	25	4
041	41	40	30	5
052	52	50	40	5
063	63	60	50	6
077	77	75	60	6
099	99	100	75	6
125	125	125	100	6
144	144	150	125	6
192	192	200	150	7
242	242	250	200	7
289	289	300	250	7

f

Filtering and Common Mode Capacitor Configuration

Code	Filtering	Default CM Cap Connection
A	Yes	Jumper Removed
J	Yes	Jumper Installed

g

Dynamic Braking

Code	Internal Resistor	Internal Transistor
A	No	Yes
N	No	No

h

Feedback

Code	Type	Installation Location
0	None	N/A
1	Standard Encoder	I/O Card

i

I/O

Code	Type	Voltage
N	None	N/A
A	Standard	24V DC/AC
B	Standard	115V AC

j

Communication

Code	Version
N	None
D	DeviceNet
R	RIO
C	ControlNet (Coax)
F	ControlNet (Fiber)
S	RS485 DF-1
H	RS485 HVAC
P	Profibus DPV1
I	Interbus
E	Ethernet

k

HIM

Code	Version
0	No HIM - Blank Plastic Inserted (Drive Mount)
3	Full Numeric LCD HIM (Drive Mounted)
5	Programmer Only LCD HIM (Drive Mounted)
6	Door Mounted Full Numeric LCD HIM
7	Door Mounted Programmer Only LCD HIM

Catalog Number Explanation, Continued

I

Options	
Code	**Option**
-ND	Normal Duty
-HD	Heavy Duty
Input Devices	
-P3	Circuit Breaker
-P4	Drive/Bypass Mode Circuit Breaker
-P6	Fused Disconnect
-P7	Drive/Bypass Mode Fused Disconnect
Reactors	
-L1	Input Reactor, 3%
-L2	Output Reactor, 3%
-L3	Input Reactor, 5%
-L4	Output Reactor, 5%
Enclosure Options	
-H1	Lexan HIM Cover
-H2	Metallic HIM Cover (Solid Door)
-E5	Enclosure Space Heater

I (cont'd)

Options	
Code	**Option**
Bypass	
-B0	No Bypass
-B1	Manual Bypass
Control Power	
-C1	Drive Only Control Power
Power Filtering	
-F5	Transient Voltage Surge Suppressor
Operator Devices	
-S51	H/O/A Selector Switch (Start/Stop/Spd. Ref.)
-S59W	Run Pilot Light (White)
-S59G	Run Pilot Light (Green)
-S59R	Run Pilot Light (Red)
-S60R	Drive Fault Pilot Light (Red)
-S60A	Drive Fault Pilot Light (Amber)
-S68	Speed Potentiometer (1-Turn)
-S53	Control Power On Pilot Light (White)
-S54	Drive & Bypass Mode Pilot Lights (Amber)
-S66	Drive/Bypass (B1, if present) Disable Mushroom Push button

Additional Catalog Number Notes

Enclosure Types (Position 6/c)

Pre-Engineered FasTrac Packaged Drives are assembled in NEMA/UL Type 1, 3R, or 12 enclosures. Each enclosure type lends itself to a particular type of protection and environment. The enclosures detailed below do not normally protect electrical equipment from condensation, corrosion or contamination which may occur within the enclosure or enter via the conduit or unsealed openings. Users must make adequate provisions to safeguard against such conditions, and satisfy themselves that the equipment is properly protected.

NEMA/UL Type 1 enclosures are intended for indoor use primarily to provide a degree of protection against contact with the enclosed equipment in locations where unusual service conditions do not exist. The enclosures are designed to meet the rod entry and rust resistance design tests. Openings in the enclosure door or sides and/or fans on the door(s) or sides allow for free exchange of inside and outside air. Design is based upon 0...40 °C ambient temperature during operation. Refer to PowerFlex 750-Series drive specifications for storage requirements.

- A = NEMA/UL Type 1 - with fans if needed (Frames 2...7 drives)
- I = NEMA/UL Type 1 - with fans if needed (Frame 1 drive)

NEMA/UL Type 12 enclosures are intended for indoor use primarily to provide a degree of protection against dust, falling dirt and dripping non-corrosive liquids. They are designed to meet drip, dust and rust resistance tests. There may be ventilation openings on the enclosure to allow free exchange of inside and outside air. Closed loop auxiliary cooling may be required for higher horsepower ratings. Specifications calling for NEMA/UL Type 12 ventilated enclosures should be reviewed with the factory. Design is based upon 0...40 °C ambient temperature during operation. Refer to PowerFlex 750-Series drive specifications for storage requirements.

- H = NEMA/UL Type 12 Ventilated - with fans if needed (Frames 2...7 drives)
- J = NEMA/UL Type 12 Ventilated - with fans if needed (Frame 1 drive)

NEMA/UL Type 3R enclosures are intended for outdoor use primarily to provide a degree of protection against falling rain, and to reduce potential damage from the formation of ice on the enclosure(1). They are designed to meet rod entry, rain(2), external icing(3) and rust-resistance design tests. They are not intended to provide protection against conditions such as dust, internal condensation, or internal icing. Design is based upon -30...40 °C ambient temperature range with power applied and disconnect on. A cabinet space heater is supplied as standard.

- R = NEMA/UL Type 3R - with shrouded fan if required (Frames 2...7 drives)
- S = NEMA/UL Type 3R - with shrouded fan if required (Frame 1 drive)

(1) Evaluation criteria: No water has entered the enclosure during the specified test.
(2) Evaluation criteria: No water shall have reached live parts, insulation, or mechanisms.
(3) Evaluation criteria: The enclosure is undamaged after ice, which accumulates during the specified test, has melted. (Note: The drive is not required to be operable while ice-laden).

Specifications

In most cases the general specifications of a packaged drive package will match those of a standalone drive. See Additional Resources on page 4 for further information. Also, see Agency Certification - Codes and Standards on page 15.

Short Circuit Current Rating

Short Circuit Current Rating (SCCR) of the Package - the short circuit current capability of any drive package will be based upon the specific combination of the options chosen as shown in this table.

Rating		No Bypass		With Bypass	
Hp	Duty	CB ISC	Fuse D/S ISC	CB ISC	Fuse D/S ISC
1	ND	35,000	100,000	35,000	100,000
1	HD				
2	ND				
2	HD				
3	ND				
3	HD				
5	ND				
5	HD				
7.5	ND				
7.5	HD				
10	ND				
10	HD				
15	ND				
15	HD				
20	ND				
20	HD				
25	ND				
25	HD				
30	ND				
30	HD				
40	ND				

Rating		No Bypass		With Bypass	
Hp	Duty	CB ISC	Fuse D/S ISC	CB ISC	Fuse D/S ISC
40	HD	35,000	100,000	35,000	100,000
50	ND				
50	HD				
60	ND				
60	HD				
75	ND				
75	HD				
100	ND				
100	HD				
125	ND				
125	HD				
150	ND				
150	HD				
200	ND				
200	HD				
250	ND			50,000	
250	HD	50,000			
300	ND				
300	HD				
350	ND				

Duty Cycle

- ND = Normal Duty Rated.

  100% continuous current

  110% current for 1 minute

  150% for 3 seconds
- HD = Heavy Duty Rated.

  100% continuous current

  150% current for 1 minute

  180% for 3 seconds

IMPORTANT The Packaged Drive duty cycle rating is located on the drive "System" data nameplate. The standard drive is used as a component in the enclosure and may indicate ratings on its nameplate that differ from the "System" data nameplate. The packaged drive system rating may be limited by other components sized for NEC/typical motor ratings. In all cases the system nameplate data supersedes any component nameplate information. Unless otherwise stated, Normal Duty Rated packaged drives cannot be used on Heavy Duty applications.

Ambient Temperature Rating

- NEMA/UL Type 1, 12: 0...40 °C
- NEMA/UL Type 3R: -30°C...40 °C ambient temperature range with power applied and disconnect on

Maintenance

Variable speed drive equipment should be inspected periodically. Inspection intervals should be based on environmental and operating conditions and adjusted as indicated by experience. An initial inspection within three to four months after installation is suggested. See National Electrical Manufacturers Association (NEMA) Standard No. ICS 1.3, Preventive Maintenance of Industrial Control and Systems Equipment, for general guidelines for setting up a periodic maintenance program.

Inspect blowers and fans used for forced air cooling. Replace any that have bent, chipped, or missing blades, or if the shaft does not turn freely. Apply power momentarily to check operation. If unit does not operate, check and replace wiring, fuse, blower or fan motor as appropriate. Clean or change air filters as annually or more often if atmospheric conditions cause an air flow reduction of greater than 10%.

Options

Sample Power Distribution Schemes

The power distribution schemes shown below are for typical configurations. Actual specified configurations may vary with accepted design practices or code restrictions.

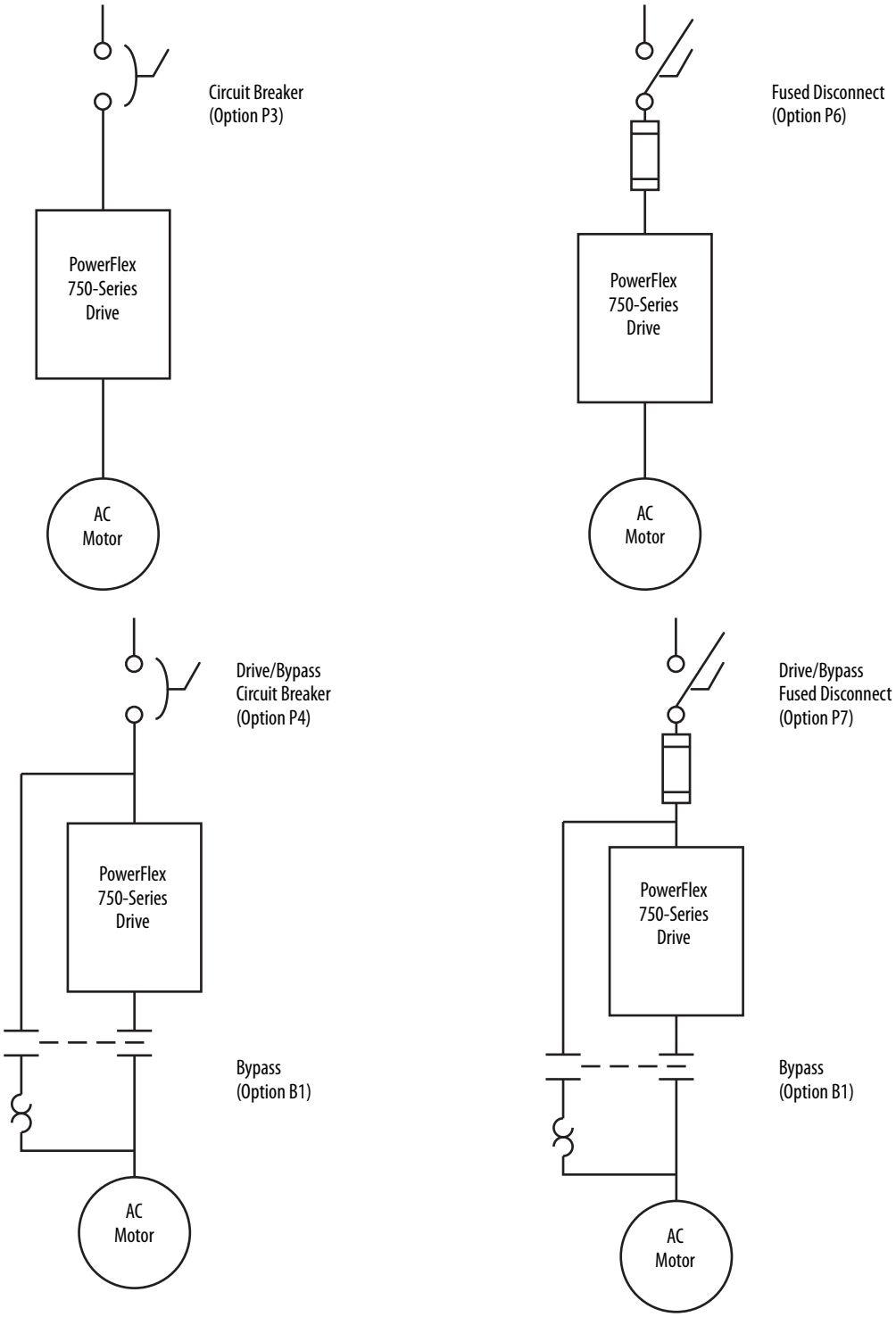

Power Disconnect

Option		Description
P3	Drive Circuit Breaker	This option is for disconnecting drive power only. All ratings use a thermal magnetic type breaker. All mechanisms are through the door and include handle operators, door interlocking and are pad-lockable.
P4	Drive/Bypass Mode Circuit Breaker	This option is for disconnecting all input power to the cabinet. Most ratings will use a thermal magnetic type breaker. All mechanisms are through the door and include handle operators, door interlocking and are pad-lockable.
P6	Drive Disconnect Switch and Fuses	This option is for disconnecting drive power only. A through the door pad lockable disconnect switch with fuses is provided.
P7	Drive/Bypass Mode Fused Disconnect Switch	This option is for disconnecting all input power to the cabinet. A through the door pad lockable disconnect switch with fuses is provided.

Control Power

Option		Description
C1	Drive Only Control Power	This option provides a fused (two primary and one secondary) control power transformer mounted and wired inside the drive enclosure. The transformer is rated for drive and options power only. There is no additional capacity for customer use.

Output Devices

Common mode output cores are provided as standard on all ratings.

Bypass

Option		Description
B0	No Bypass	–
B1	Manual Bypass(1) (2)	This option provides a means to manually switch a single motor from drive control to bypass (across the line) operation. Separate contactors are provided for drive output and bypass operation. An electronic or bimetallic motor overload is provided for motor protection while operating in the bypass mode. A door-mounted “Drive/Off/Bypass” selector switch is included.

(1) The Bypass Operation capability provided by this option is not intended for maintenance of the drive or entry into the enclosure with power applied while operating in the bypass mode.

(2) Bypass Option includes the required 120V AC control power.

Operator Devices

Code	Option	Also Requires	Description
S51	Hand/Off/Auto Selector Switch	IB	This switch will be door mounted. For NEMA 3R enclosures with optional HIM cover, it will be located under the cover to the left of the HIM. The drive will run when the switch is in the "Hand" position, and will be stopped when the switch is in "Off" position. In the "Auto" position, the drive will run/stop based upon the closure of a remote dry contact. In order for the drive to run, enable or auxiliary stop/fault reset inputs (if used) must be present. If a drive connected HIM is present, the HIM "stop" will stop the drive regardless of the selector switch position (the HIM "start" button will be non-functional). The Hand/Off/Auto selector switch also determines the origin of the speed reference. Factory default is "Hand" = HIM (unless door mounted pot option is provided) and "Auto" = remote analog reference. (this can be changed to communication option by customer)
S59W	Run Pilot Light	IB	This white pilot light will be door mounted. For NEMA 3R enclosures with optional HIM cover, it will be located outside of the cover. It will be illuminated when the drive option board relay 0 indicates drive is in run mode.
S59G	Run Pilot Light	IB	This green pilot light will be door mounted. For NEMA 3R enclosures with optional HIM cover, it will be located outside of the cover. It will be illuminated when the drive option board relay 0 indicates drive is in run mode.
S59R	Run Pilot Light	IB	This red pilot light will be door mounted. For NEMA 3R enclosures with optional HIM cover, it will be located outside of the cover. It will be illuminated when the drive option board relay 0 indicates drive is in run mode.
S60R	Fault Pilot Light	IB	This red pilot light will be door mounted. For NEMA 3R enclosures with optional HIM cover, it will be located outside of the cover. It will be illuminated when the drive option board relay r1 indicates drive is faulted.
S60A	Fault Pilot Light	IB	This amber pilot light will be door mounted. For NEMA 3R enclosures with optional HIM cover, it will be located outside of the cover. It will be illuminated when the drive option board relay r1 indicates drive is faulted.
S68	Speed Potentiometer (1 Turn)	IB, S51	This potentiometer will be door mounted. For NEMA 3R enclosures with optional HIM cover, it will be located outside of the cover. When the HOA selector switch is in the "Hand" position, this pot will provide the speed reference. (unipolar only)
S53	Control Power On Pilot Light	–	This white pilot light will be door mounted. For NEMA 3R enclosures with optional HIM cover, it will be located outside of the cover. It will be illuminated whenever control power is present.
S54	Drive & Bypass Mode Pilot Lights	B1	These amber pilot lights will be door mounted. For NEMA 3R enclosures with optional HIM cover, it will be located outside of the cover. When the Drive/Off/Bypass switch is in the "Drive" position, the "Drive" light will illuminate. When the Drive/Off/Bypass switch is in the "Bypass" position, the "Bypass" light will illuminate.
S66	Drive/Bypass Disable Mushroom Push Button	S66	This push-pull button will be door mounted. For NEMA 3R enclosures with optional HIM cover, it will be located outside of the cover. When in the depressed position, the drive enable input, drive output contactor, and bypass contactor will be disabled/opened.

Notes:

- Pilot lights are incandescent transformer type
- All devices operate at 120 VAC unless otherwise specified

Drive Parameter Settings for Operator Devices

If certain operator devices are selected, the associated drive parameters must be configured as directed in this table to be sure the drive operates correctly.

Option Code	Port	Parameter	Value	Description
S51	0 (Drive)	P163	5000100	Digital Input Run = Port 5 DIO
		P174	5000102	Digital Input Speed Sel 1 = Port 5 DIO
		P550	500050	Speed Ref B Sel = Analog 0 For Auto
		P545	872	Speed Ref A Sel = Door HIM
S68		P545	500060	Speed Ref A Sel = Potentiometer
S51, Not 3, 5, 6 or 7		P545	500050	Speed Ref A Sel = Analog 0 for Hand-held HIM
S59	5	P10	93501	Drive Active
S60		P20	93507	Drive Fault

Power Conditioning

In general, PowerFlex 750-Series drives are suitable for direct connection to a correct voltage AC line that has a minimum impedance of 0.5% relative to the rated drive input kVA. If the line has lower impedance, a line reactor or isolation transformer must be added in front of the drive to increase line impedance. If the line impedance is too low, transient voltage spikes or interruptions can create excessive current spikes that may cause nuisance input fuse blowing or damage to the drive power structure, or both.

The basic rules for determining if a line reactor or isolation type transformer is required are as follows:

- If the AC input power system is not solidly grounded (i.e. high resistive ground or ungrounded) an isolation transformer with the neutral of the secondary grounded is highly recommended. If the line-to-ground voltages on any phase can exceed 125% of the nominal line-to-line voltage, an isolation transformer with the neutral of the secondary grounded, is always required.
- If the AC line supplying the drive has power factor correction capacitors that are switched in and out, an isolation transformer is recommended between the capacitors and drive. If the capacitors are permanently connected and not switched, the general rules for impedance mismatch above apply.
- An isolation transformer or input line reactor is recommended. Line reactors can be ordered installed in the drive enclosure. Isolation transformer are typically installed external to the enclosure.

Option		Description
L1	3% Input Line Reactor	This option provides an open core drive input line reactor that mounts inside the drive enclosure. Typical impedance is 3%.
L2	3% Output Load Reactor	This option provides an open core drive output load reactor, which mounts inside the drive enclosure. Typical impedance is 3%.
L3	5% Input Reactor	This option provides an open core drive input line reactor that mounts inside the drive enclosure. Typical impedance is 5%.
L4	5% Output Reactor	This option provides an open core drive output load reactor, which mounts inside the drive enclosure. Typical impedance is 5%.

Agency Certification - Codes and Standards

Agency	Description
CSA	CSA Standards

Drawings

One set of schematics [279 x 432 mm (11 x 17 in.)] is shipped in the cabinet. PDF and AutoCAD versions are available upon request.

Enclosure Information

Guidelines

The information in this document may be useful in making some pre-installation decisions. Consideration should be given to enclosure type (environment), enclosure size (mounting area available and mounting convention), panel layouts (customer wiring connection locations and extra customer mounting area), terminal block descriptions and catalog number definition.

Approximate Dimensions

NEMA/UL Type 3R, 1 Hp Normal Duty. . . 15 Hp Normal Duty (Families 1 and 2)

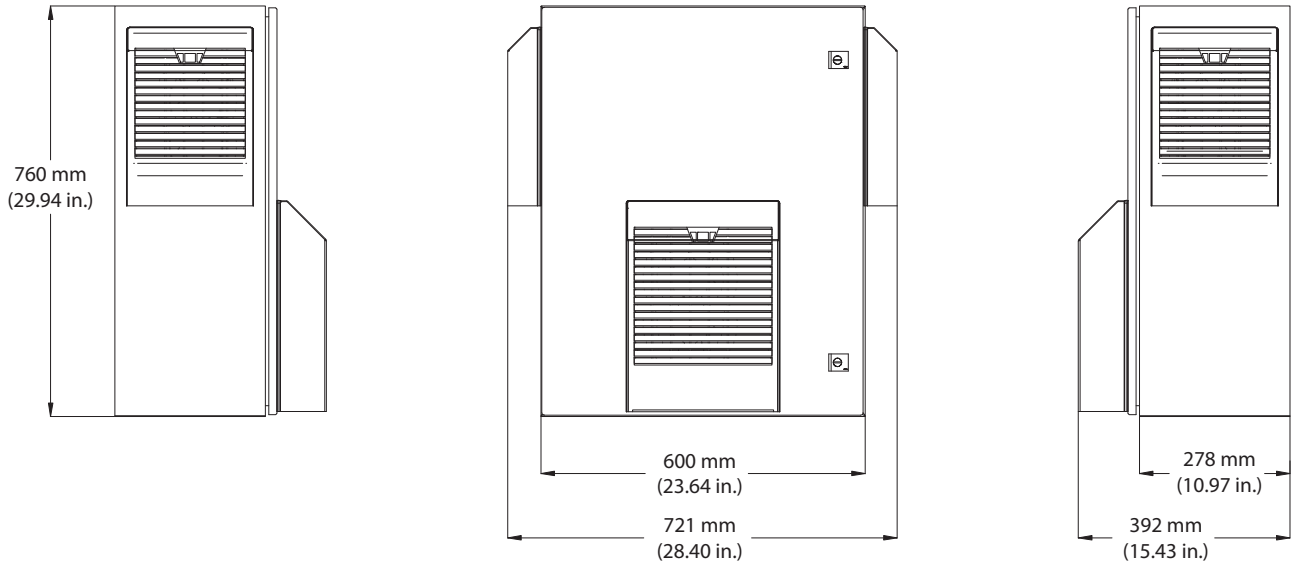

NEMA/UL Type 3R, 15 Hp Heavy Duty. . . 30 Hp Normal Duty (Family 3)

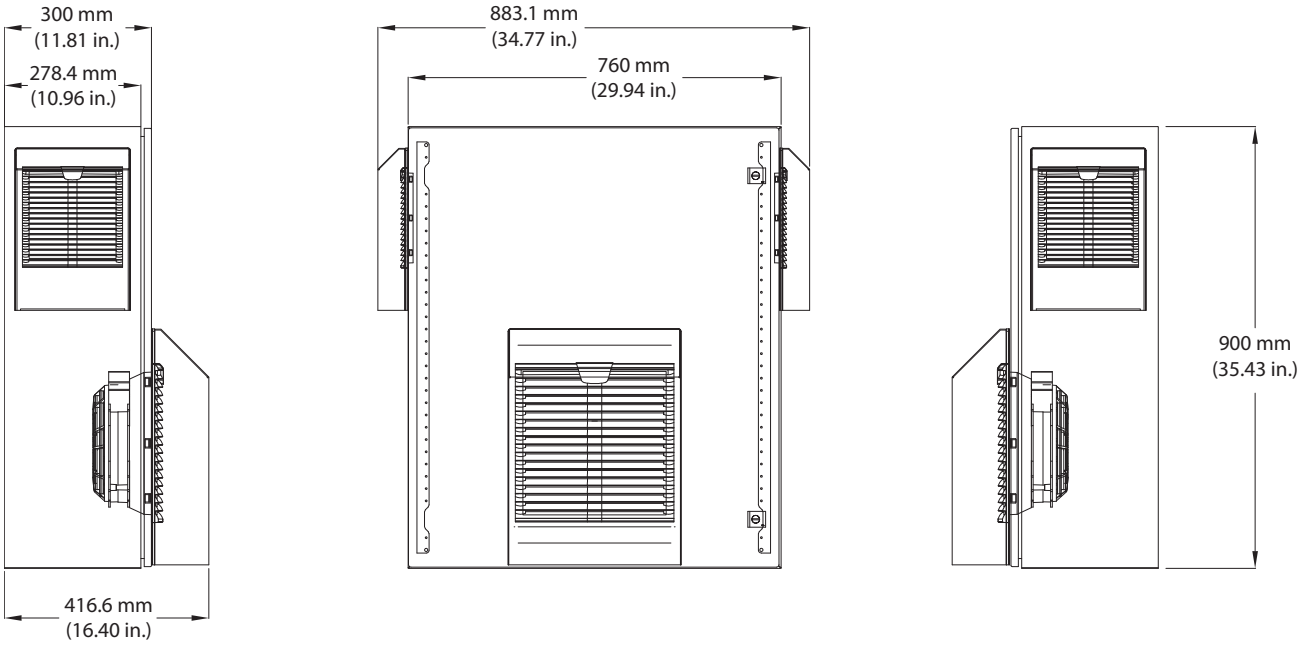

NEMA/UL Type 3R, 30 Hp Heavy Duty. . . 50 Hp Normal Duty (Family 4)

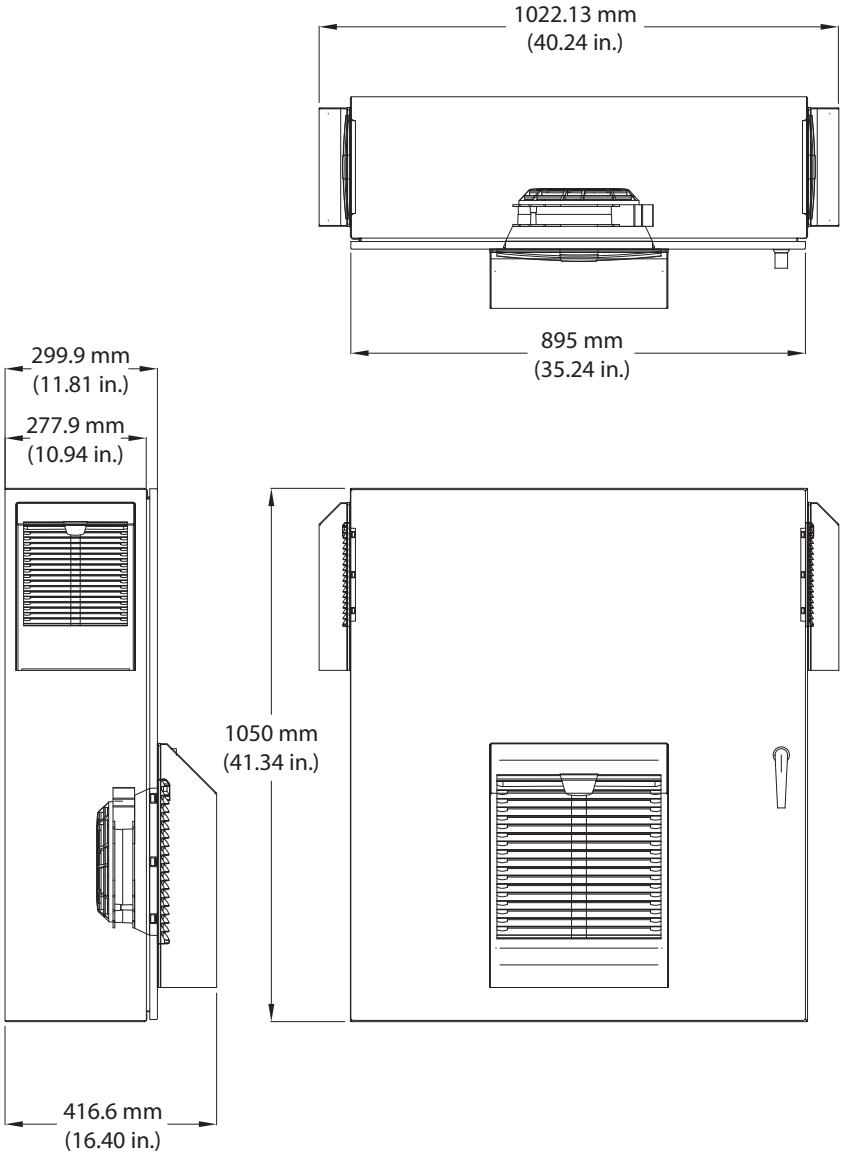

NEMA/UL Type 3R, 50 Hp Normal Duty. . .75 Hp Heavy Duty (Family 5)

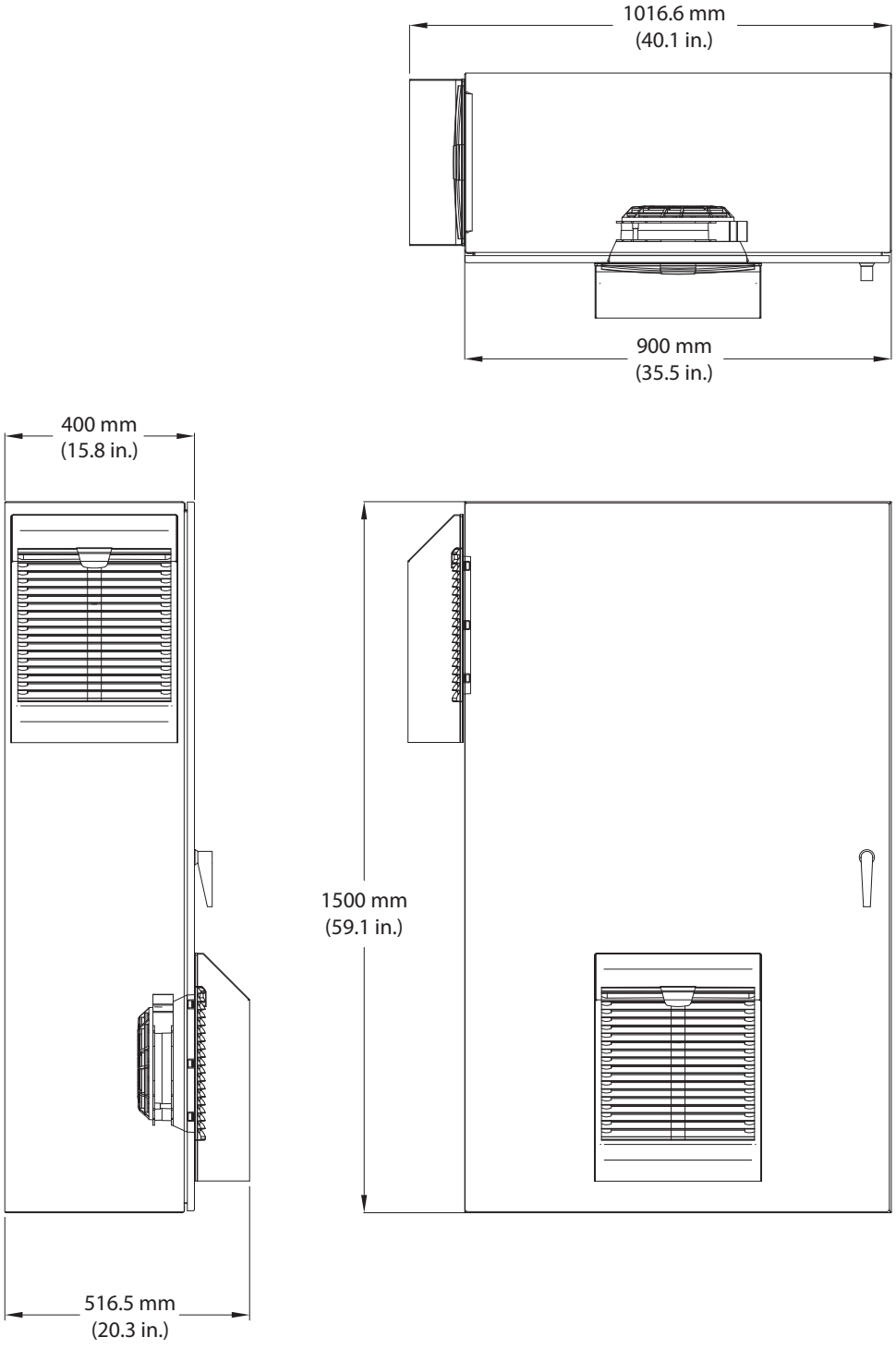

NEMA/UL Type 3R, 100 Hp Normal Duty. . . 200 Hp Normal Duty (Family 6)

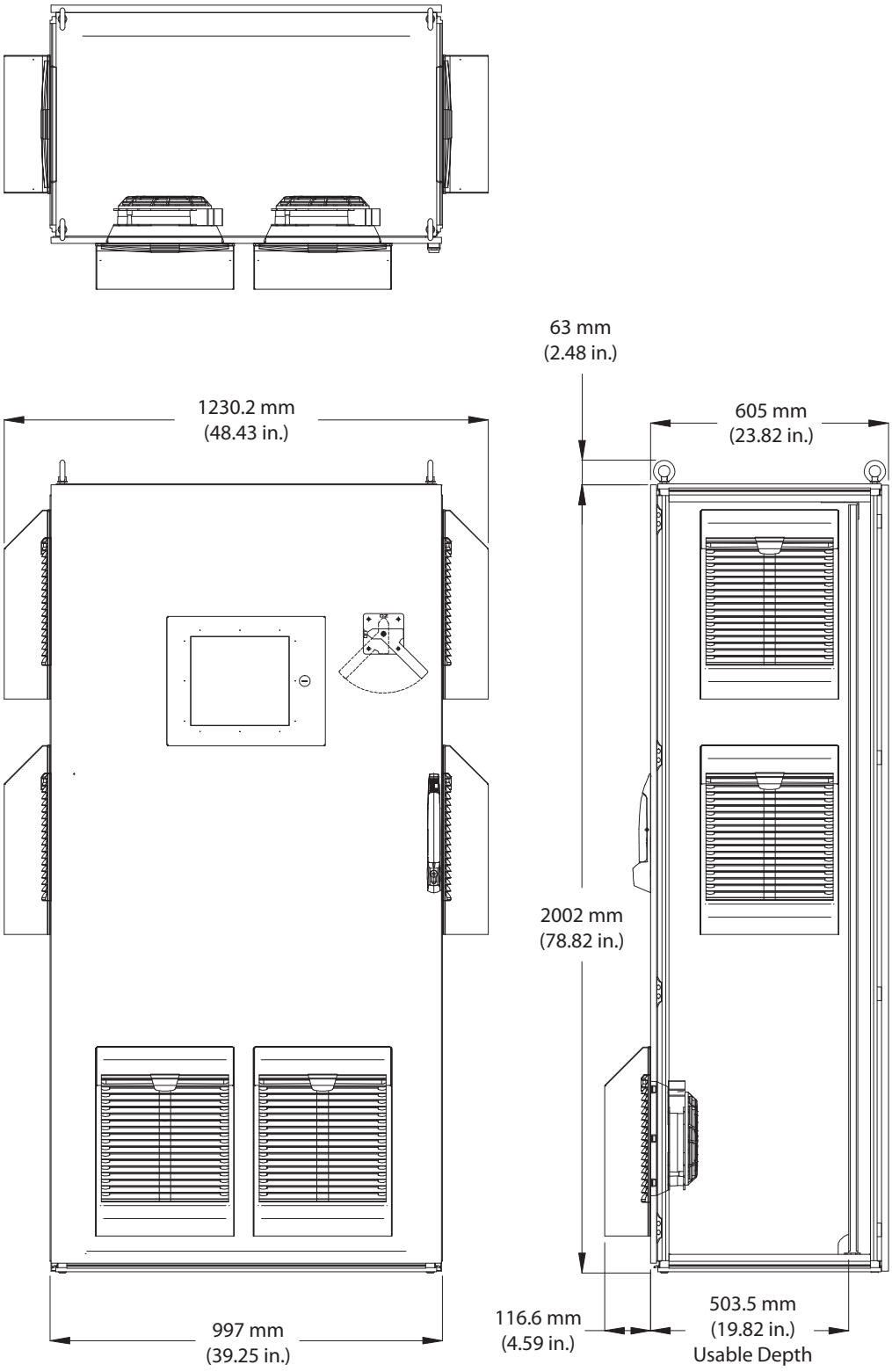

NEMA/UL Type 3R, 250 Hp Heavy Duty. . . 350 Hp Normal Duty (Family 7)

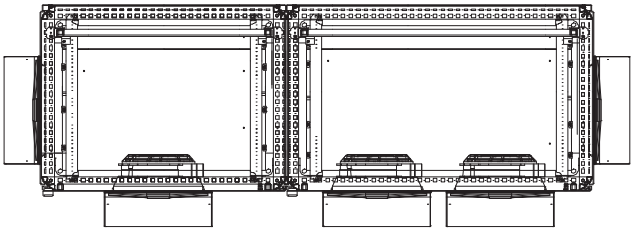

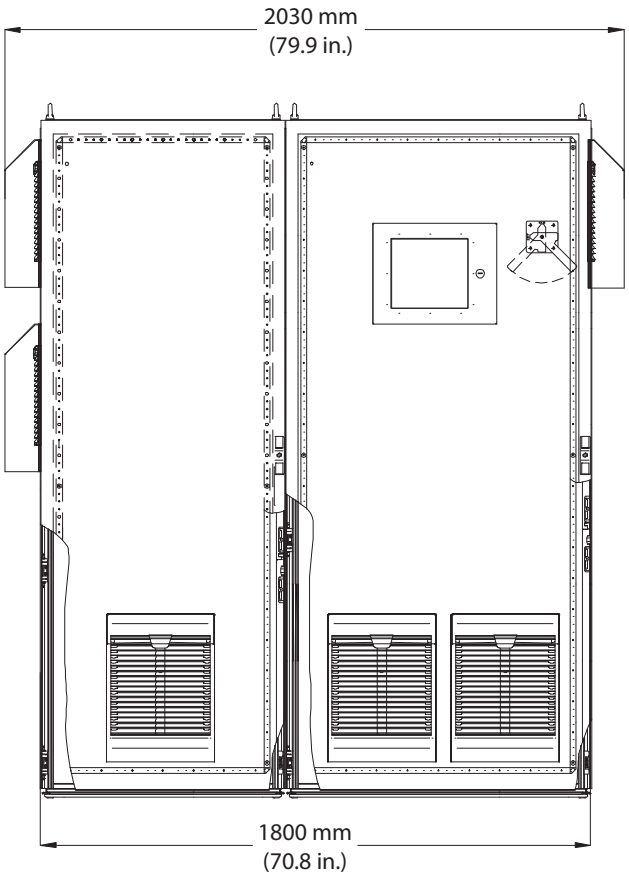

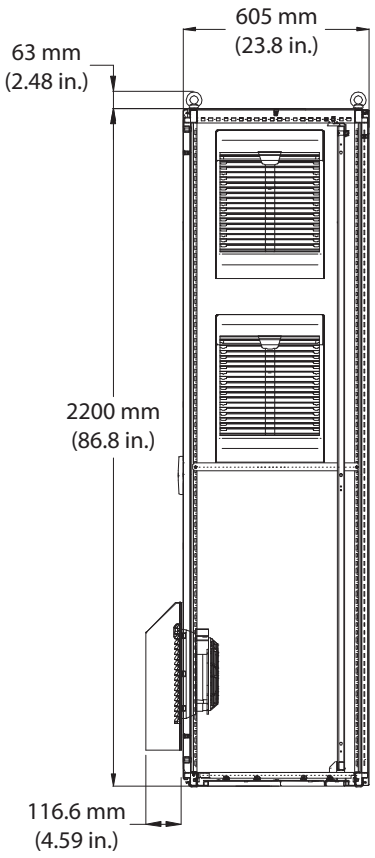

NEMA/UL Type 1 and 12, 1 Hp Normal Duty. . . 15 Hp Normal Duty (Families 1 and 2)

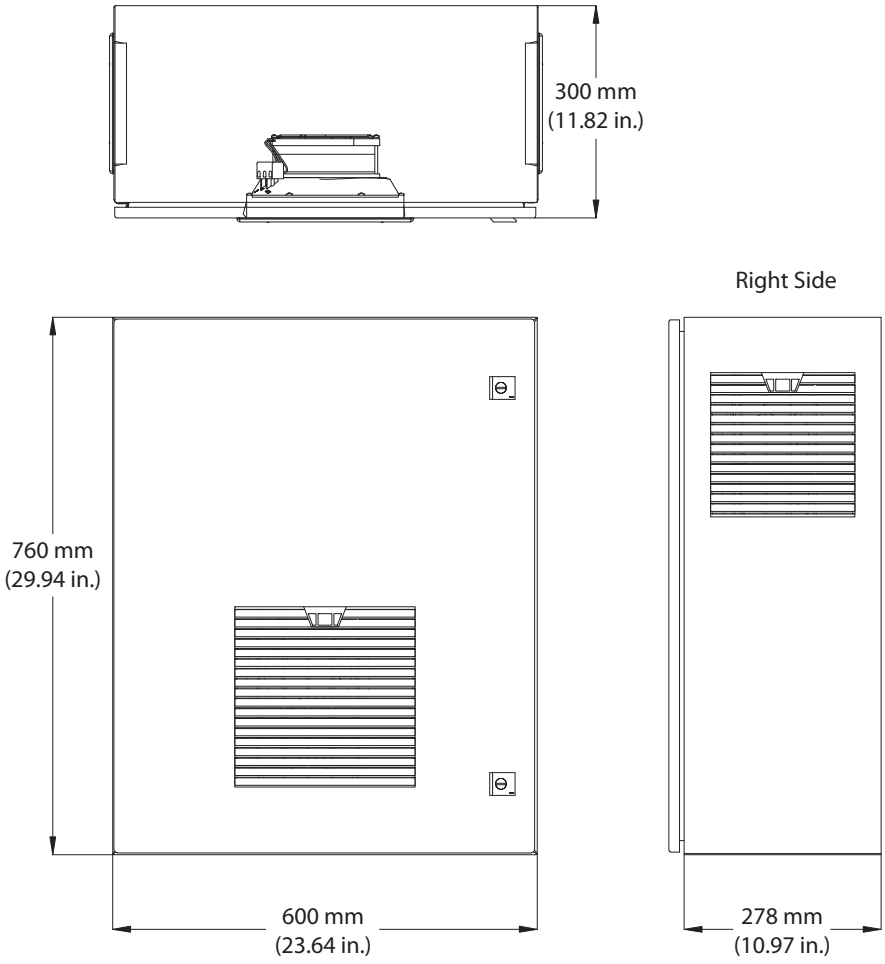

NEMA/UL Type 1 and 12, 15 Hp Heavy Duty. . .30 Hp Normal Duty (Family 3)

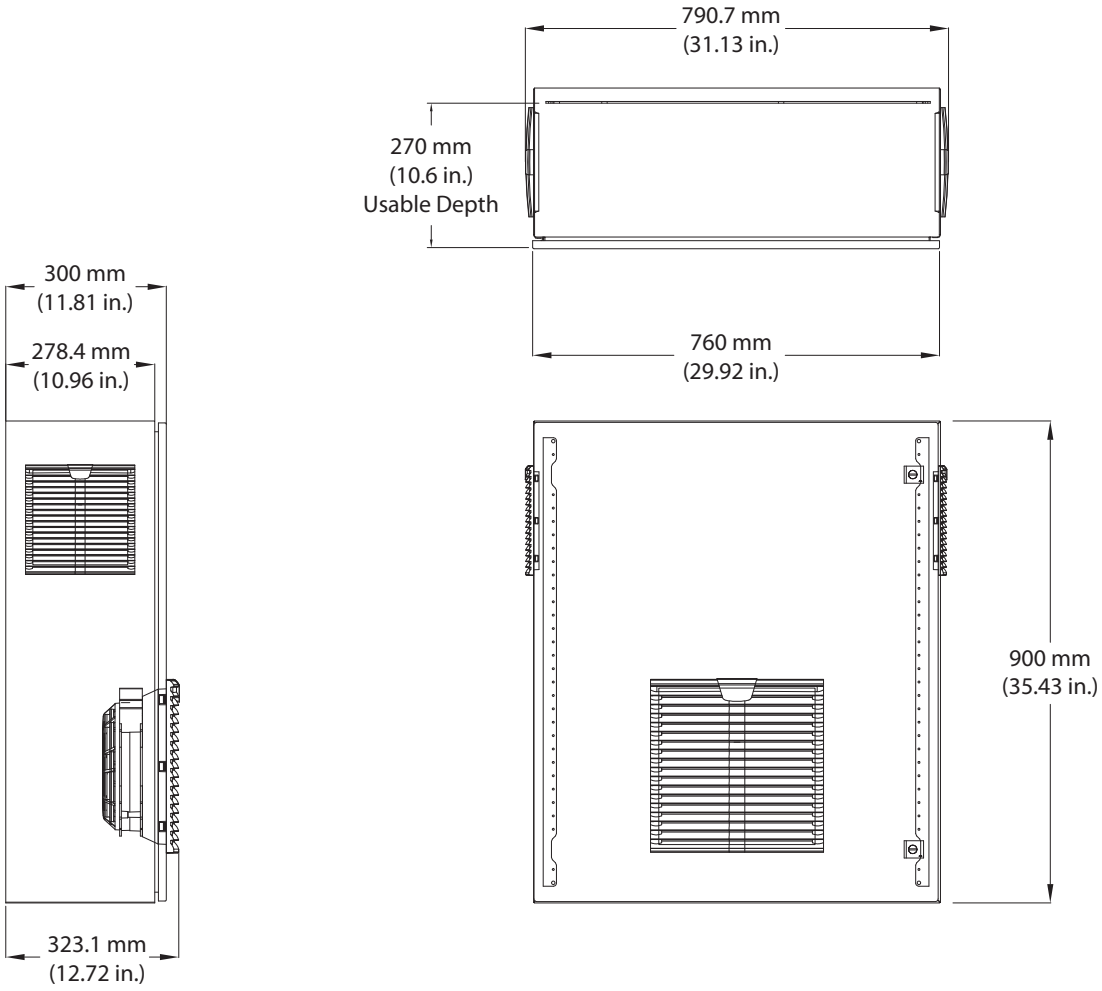

NEMA/UL Type 1 and 12, 30 Hp Heavy Duty. . . 50 Hp Normal Duty (Family 4)

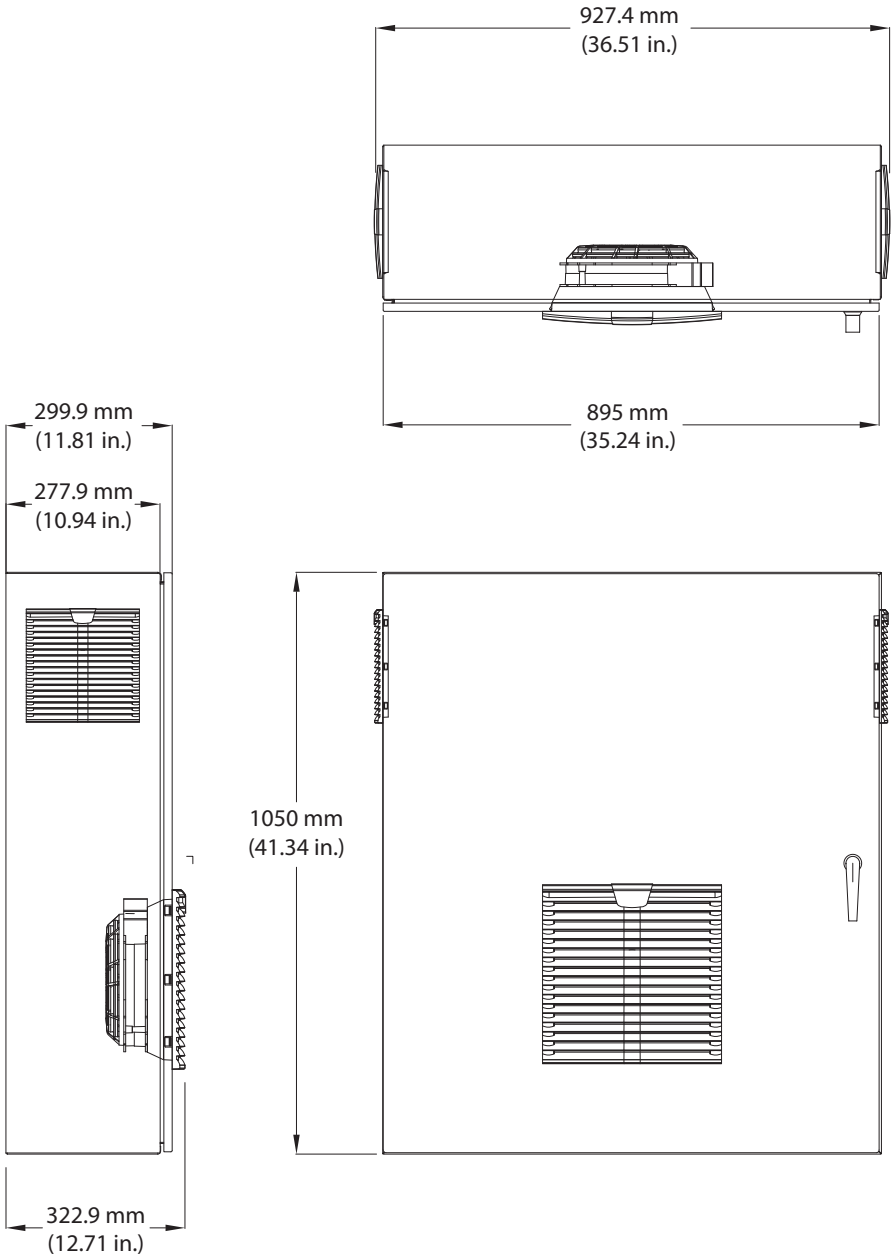

NEMA/UL Type 1 and 12, 50 Hp Normal Duty. . . 75 Hp Heavy Duty (Family 5)

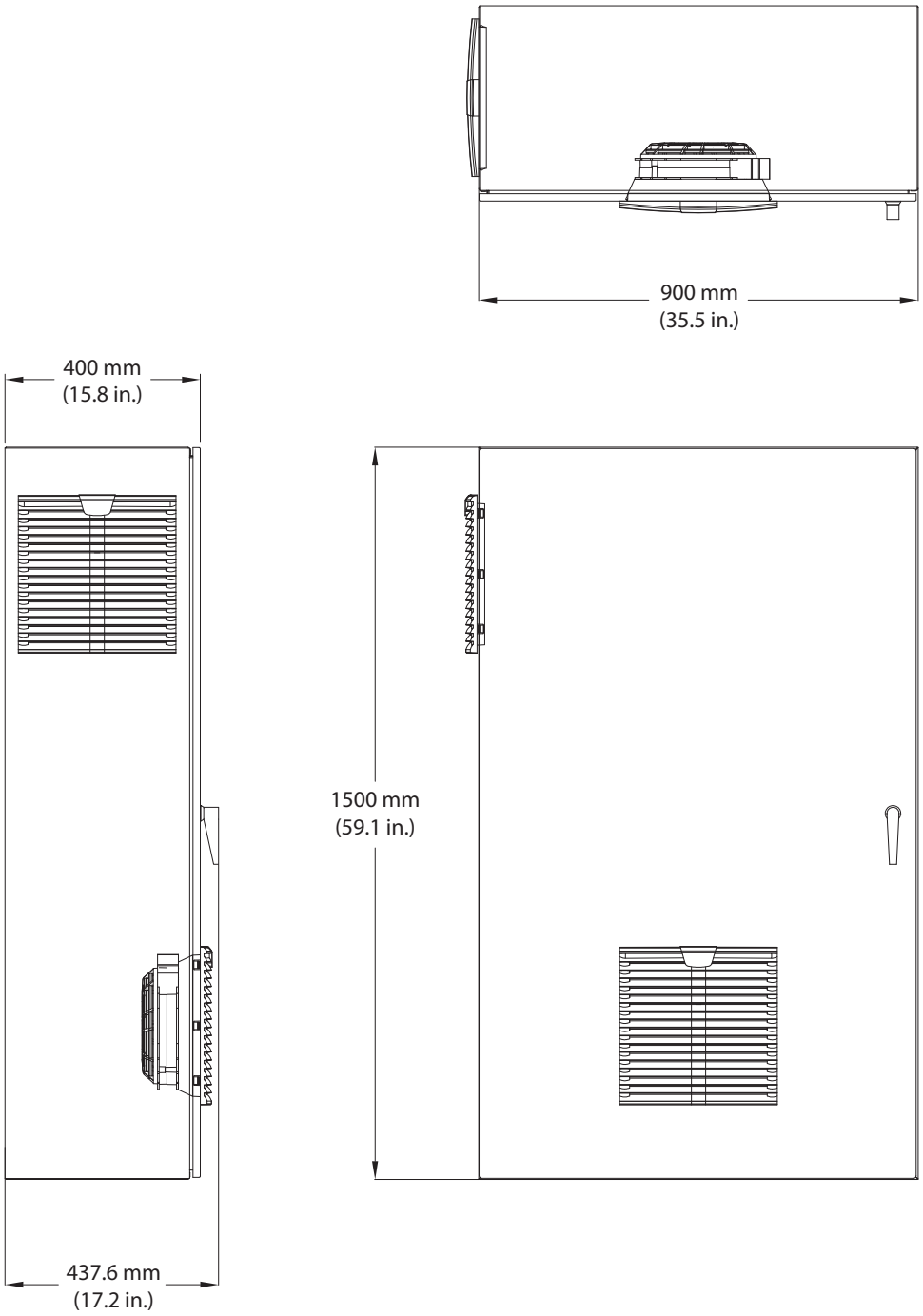

NEMA/UL Type 1 and 12, 100 Hp Normal. . .200 Hp Normal Duty (Family 6)

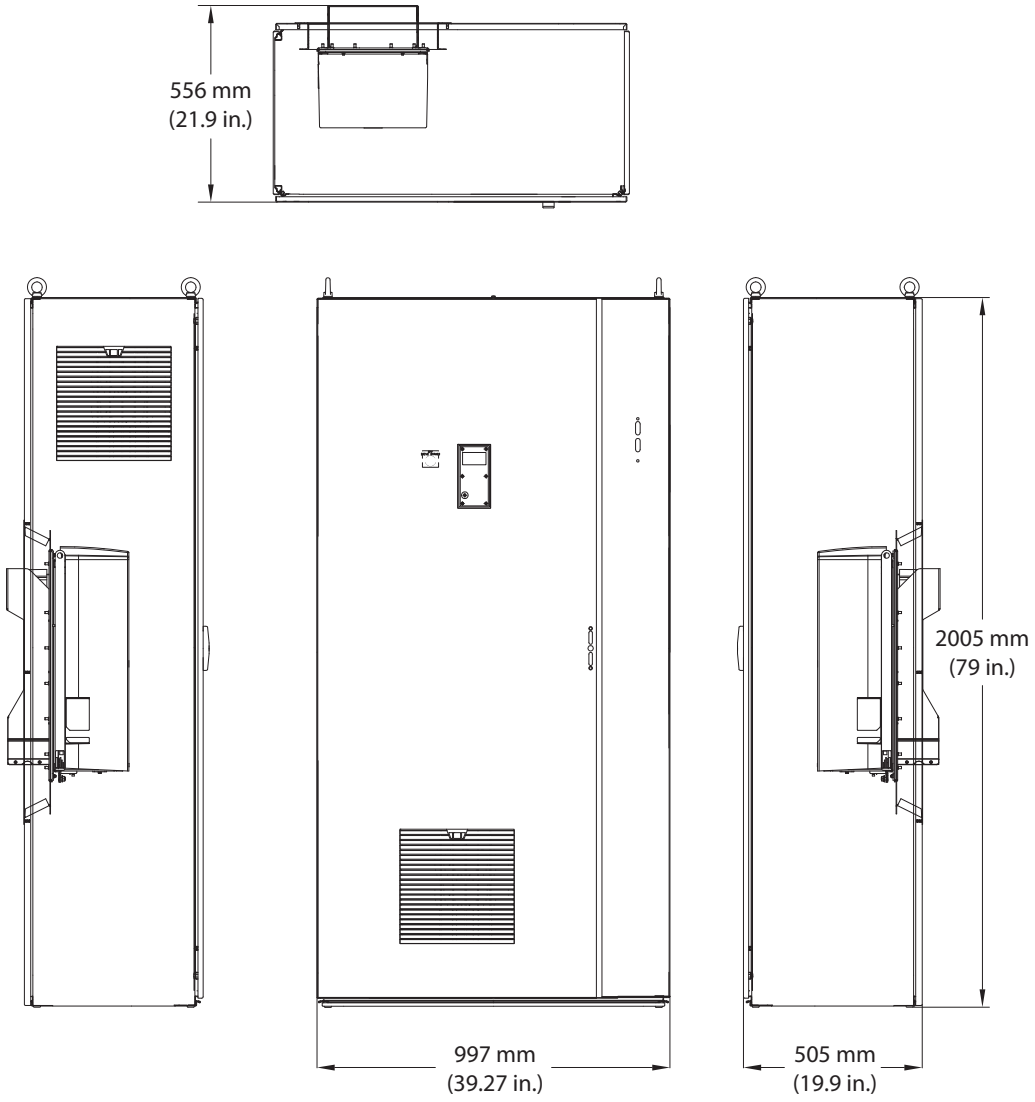

NEMA/UL Type 1 and 12, 250 Hp Heavy Duty. . . 350 Hp Normal Duty (Family 7)

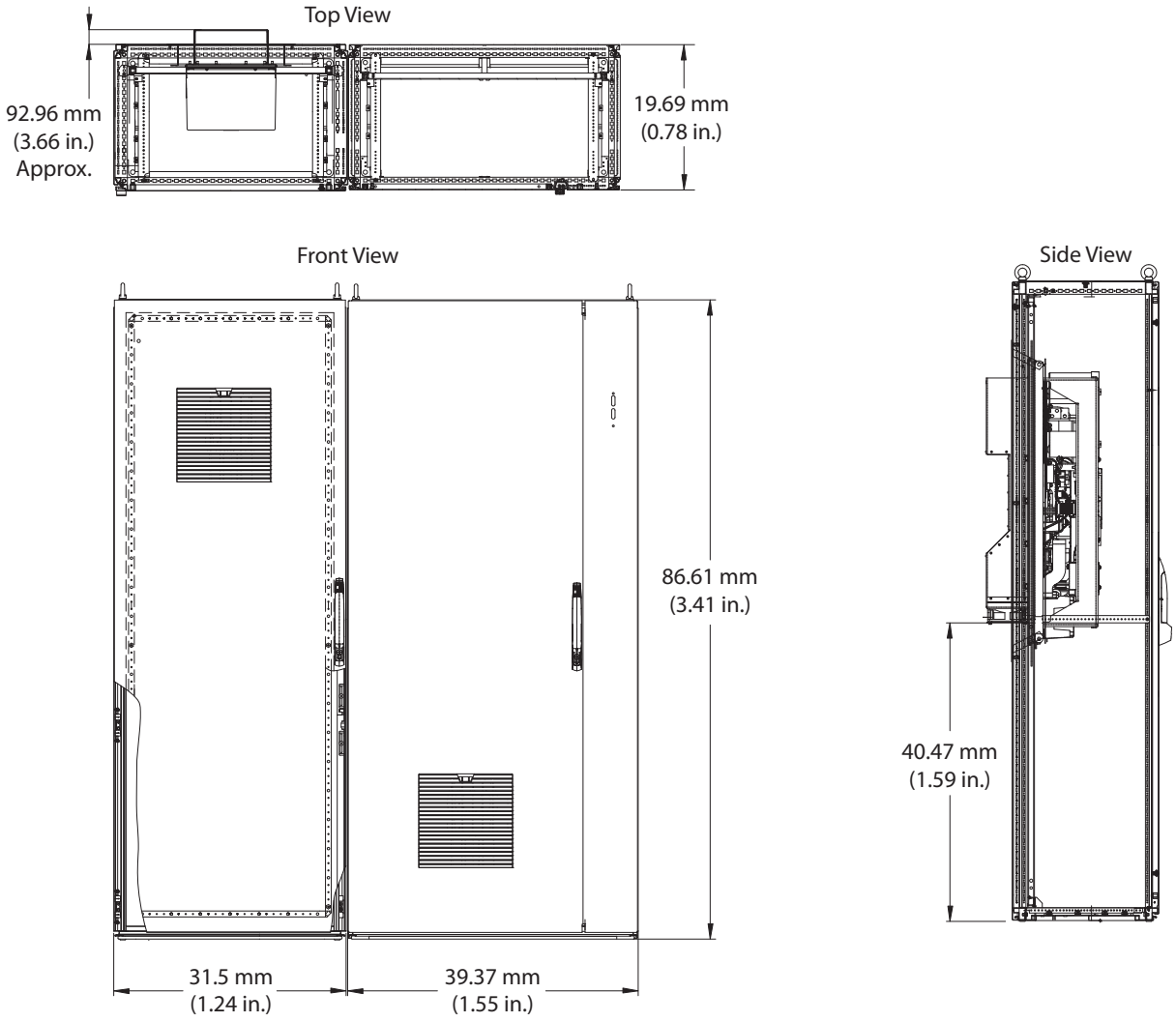

Rockwell Automation Support

Rockwell Automation provides technical information on the Web to assist you in using its products. At http://www.rockwellautomation.com/support, you can find technical manuals, technical and application notes, sample code and links to software service packs, and a MySupport feature that you can customize to make the best use of these tools. You can also visit our Knowledgebase at http://www.rockwellautomation.com/knowledgebase for FAQs, technical information, support chat and forums, software updates, and to sign up for product notification updates.

For an additional level of technical phone support for installation, configuration, and troubleshooting, we offer TechConnect^{SM} support programs. For more information, contact your local distributor or Rockwell Automation representative, or visit http://www.rockwellautomation.com/support/.

Installation Assistance

If you experience a problem within the first 24 hours of installation, review the information that is contained in this manual. You can contact Customer Support for initial help in getting your product up and running.

United States or Canada	1.440.646.3434
Outside United States or Canada	Use the Worldwide Locator at http://www.rockwellautomation.com/rockwellautomation/support/overview.page, or contact your local Rockwell Automation representative.

New Product Satisfaction Return

Rockwell Automation tests all of its products to help ensure that they are fully operational when shipped from the manufacturing facility. However, if your product is not functioning and needs to be returned, follow these procedures.

United States	Contact your distributor. You must provide a Customer Support case number (call the phone number above to obtain one) to your distributor to complete the return process.
Outside United States	Please contact your local Rockwell Automation representative for the return procedure.

Documentation Feedback

Your comments will help us serve your documentation needs better. If you have any suggestions on how to improve this document, complete this form, publication RA-DU002, available at http://www.rockwellautomation.com/literature/.

Medium Voltage Products, 135 Dundas Street, Cambridge, ON, N1R 5X1 Canada, Tel: (1) 519.740.4100, Fax: (1) 519.623.8930
Online: www.ab.com/mvb

Allen-Bradley, Rockwell Software, Rockwell Automation, and TechConnect are trademarks of Rockwell Automation, Inc.
Trademarks not belonging to Rockwell Automation are property of their respective companies.

www.rockwellautomation.com

Power, Control and Information Solutions Headquarters
Americas: Rockwell Automation, 1201 South Second Street, Milwaukee, WI 53204-2496 USA, Tel: (1) 414.382.2000, Fax: (1) 414.382.4444
Europe/Middle East/Africa: Rockwell Automation NV, Pegasus Park, De Kleetlaan 12a, 1831 Diegem, Belgium, Tel: (32) 2 663 0600, Fax: (32) 2 663 0640
Asia Pacific: Rockwell Automation, Level 14, Core F, Cyberport 3, 100 Cyberport Road, Hong Kong, Tel: (852) 2887 4788, Fax: (852) 2508 1846

Publication 750-TD002B-EN-P - February 2013
Supersedes Publication 750-TD002A-EN-P - October 2012

Copyright © 2013 Rockwell Automation, Inc. All rights reserved. Printed in Canada.

PowerFlex® 750-Series AC Drives
The Power and Control You Need

With a complete power range of 0.75 to 1500 kW (1 to 2000 Hp) and 400/480 and 600/690 volt availability, the PowerFlex 750-Series is a comprehensive drive family providing productivity-enhancing benefits to a wide range of global applications.

The PowerFlex 753 and 755 AC drives offer more selection for control, communications, safety and supporting hardware options than any other drives in their class.

The PowerFlex 750-Series of AC drives was designed with your needs in mind. Your need for flexibility, productivity and ease of use has been considered in every detail of these drives. The result is a family of AC drives that provides an exceptional user experience, from initial programming through operation.

This robust family of AC drives offers high performance for a wide variety of industrial applications. The PowerFlex 753 provides general purpose control for applications ranging up to 350 Hp/250 kW while the PowerFlex 755 provides maximum flexibility and performance up to 2000 Hp/1500 kW.

Consider these key features of the PowerFlex 750-Series drives and how they can help you maximize your productivity:

Simplified Integration with Logix – The PowerFlex 753 and 755 offer seamless integration into the Logix environment for simplified and enhanced configuration, programming, commissioning, diagnostics and maintenance. Using either Add-on Profiles or embedded instructions*, you'll be able to reduce engineering time – and related costs – while improving the configuration, control and collection of data.

Communications – The PowerFlex 750-Series supports a comprehensive range of network protocols to ease integration into your architecture. The PowerFlex 755 features an embedded EtherNet/IP™ port, allowing you to easily manage drive data over EtherNet/IP networks. In addition, a dual-port EtherNet/IP option module for the PowerFlex 750-Series provides flexible and cost-effective ways to apply EtherNet/IP, including Device Level Ring functionality.

Safe Torque-off and Safe Speed Monitor – Help protect personnel and equipment while reducing machine downtime with safety solutions up to and including PLe/SIL, Cat 3 and Cat 4. These safety options provide a choice for safety levels depending on your application requirements.

DeviceLogix™ – Controls outputs and manages status information locally within the drive, allowing you to operate the drive independently or complementary to supervisory control.

Configure for Your Application – Each drive has a slot-based hardware architecture that reduces unnecessary add-ons and gives you the flexibility to select option cards to suit your application and expand your drive for future needs. Supported hardware control options are common for the series to help reduce your inventory and spare parts requirements.

Predictive Diagnostics – Prevent unplanned downtime with predictive diagnostics and built-in protection features to help guard your investment. These settings allow the PowerFlex 750-Series to keep track of information that affects the life of the drive components. PowerFlex 755 drives 250 kW/350 Hp and larger have additional diagnostic features including built-in protection devices.

Application-matched Packaging – Gain additional flexibility with packaging options that address a range of application and environmental protection requirements.

Feedback – Options include Universal, Encoder and Dual Encoder feedback options. The Universal Feedback option includes multiple feedback interfaces to support a wide range of applications. Interfaces supported are Incremental, EnDat and Hiperface for Stegmann and Heidenhain high resolution feedback, SSI and BiSS for rotary and linear applications. The drives also provide automatic feedback loss switchover.

* PowerFlex 755 uses embedded instructions

PowerFlex 753 AC Drive

The PowerFlex 753 is ideal for general purpose applications requiring speed or torque control up to 250 kW/350 Hp. Embedded I/O along with three option slots for safety, feedback, communications, 24V power or additional I/O make the drive a flexible, cost-effective solution.

PowerFlex 755 AC Drive

PowerFlex 755 is ideal for applications requiring positioning, speed or torque control up to 1500 kW/2000 Hp. The PowerFlex 755 is easily integrated with the embedded Ethernet port and has five option slots to support additional options for feedback, I/O, safety, communications, and auxiliary 24V DC control power.

The PowerFlex 755 AC drive can be integrated with a ControlLogix® or CompactLogix™ Programmable Automation Controller (PAC) via drive instructions that are actually embedded in the PAC. This level of integration is specific to PowerFlex 755 drives on EtherNet/IP.

	PowerFlex 753	PowerFlex 755
400/480V 600V 690V	0.75 to 250 kW/1.0 to 350 Hp 1.0 to 300 Hp 7.5 to 250 kW	0.75 to 1400 kW/1.0 to 2000 Hp 1.0 to 1500 Hp 7.5 to 1500 kW
Logix Integration	• Automatic Device Configuration (with 20-750-ENETR and Studio 5000**) • Add-on Profiles	• Embedded instructions in Studio 5000** • Automatic Device Configuration (with embedded port or 20-750-ENETR, and Studio 5000**) • Add-on Profiles
DeviceLogix Control Technology	✓	✓
Safety Options: Safe Torque-Off, Safe Speed Monitor	✓	✓
Predictive Diagnostics	✓	✓
Option Slots	3	5 (3 for frame 1)
Communications	Option modules available for: • EtherNet/IP™ • Dual-port EtherNet/IP • ControlNet™ • DeviceNet™ • And a variety of industrial networks	Embedded Ethernet port standard Option modules available for: • Dual-port EtherNet/IP • ControlNet • DeviceNet • And a variety of industrial networks
I/O	Embedded I/O standard • 3 Digital Inputs, 1 Relay Output, 1 Transistor Output, 1 Analog Input, 1 Analog Output, 1 PTC Input • Option cards for additional I/O	1 Digital Input standard • Option cards for additional I/O
Motor Types	• Induction Motors • Permanent Magnet Motors (Interior)	• Induction Motors • Permanent Magnet Motors (Surface and Interior)
Positioning	• Indexing	• Indexing • PCamming • Electronic Gearing • Position/Speed Profiling
Feedback	• Incremental	• Incremental • EnDat, Hiperface, SSI and BiSS • Absolute
Application Sets	Oil Well • Pump Jack & Pump Off Fibers • PJump & Traverse	Lifting • Torqprove* Oil Well • Pump Jack & Pump Off Fibers • PJump & Traverse
Conformal Coating	✓	✓

* See publication PFLEX-BR009 for more information on crane/hoist applications.

** Also previous versions of RSLogix 5000 software.

PowerFlex 750-Series AC Drive

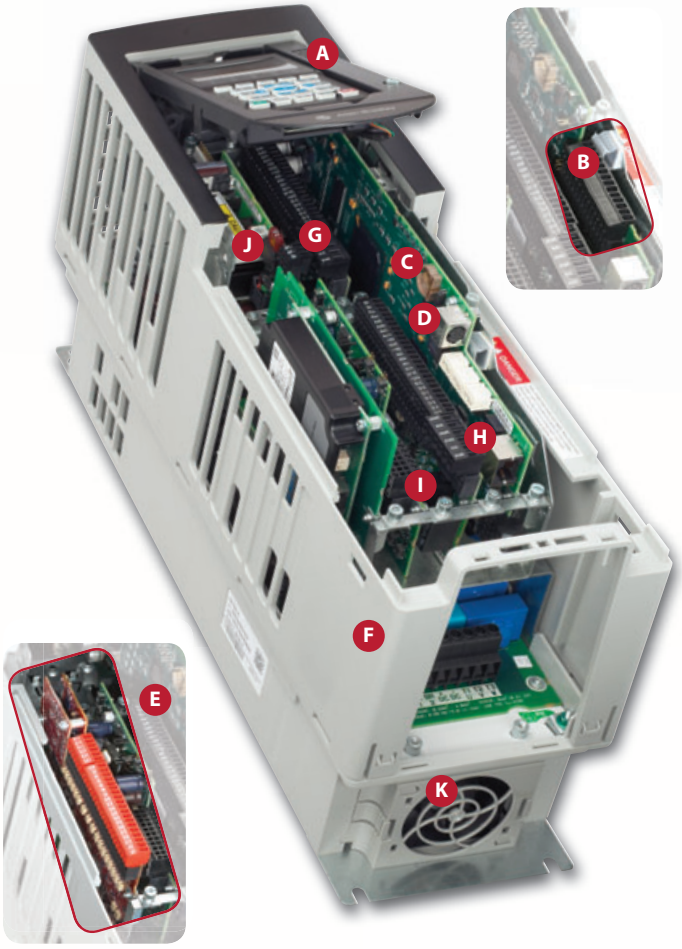

- **A** High-definition LCD display allows for six lines of text for more meaningful explanations of parameters and events.
- **B** Standard I/O on the PowerFlex 753 provides a cost-effective solution.
- **C** Real-time clock provides time-stamped events vs. run-time data.
- **D** Additional DPI for expanded programming capability.
- **E** Increase safety performance levels with the Safe Speed Monitor option card which includes an embedded safety relay.
- **F** Packaging options to meet application requirements.
- **G** DeviceLogix embedded control technology provides function block programming for stand-alone control of basic applications.
- **H** Easily configure, control and collect drive data with standard embedded Ethernet port on the PowerFlex 755.
- **I** Slot-based mechanical architecture to support additional options for I/O, feedback, safety, communications and auxiliary power supply.
- **J** Optional Auxiliary Power Supply maintains control and communications in event that main power is not present.
- **K** Easily assessable heat sink and internal fans.

e-Tools Simplify and Enhance Use of PowerFlex 750-Series Drives

Add-on Profiles

For simplified AC drive start-up and reduced development time, we've integrated Allen-Bradley® PowerFlex drive configuration with Studio 5000™ Logix Designer software (formerly RSLogix™ 5000). This single-software approach simplifies parameter and tag programming while still allowing stand-alone drive software tool use on the factory floor.

Embedded Instructions

The PowerFlex 755 AC drive can be configured with drive instructions embedded in Allen-Bradley ControlLogix and CompactLogix Programmable Automation Controllers (PAC). These are the same configuration parameters and programming instructions used by Allen-Bradley Kinetix® servo drives, providing a common, enhanced user experience.

DriveTools™ SP Software Suite

A powerful PC-based software suite, for programming, configuring and troubleshooting.

- DriveExecutive™ – for online/offline configuration and management of drives and drive peripherals
- DriveObserver™ – for real-time trending of drive information

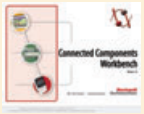

Connected Components Workbench™

Programming and configuration software supports all PowerFlex drives, Micro800™ controllers and PanelView™ component graphic terminals. This software leverages proven Rockwell Automation and Microsoft® Visual Studio® technologies for fast and easy controller programming, drive configuration and integration with the HMI editor.

PowerFlex 755 Floor Mount AC Drives

In addition to all the options and benefits available in the PowerFlex 750-Series, the PowerFlex 755 drives 250 kW/350 Hp and larger offer added benefits for maintenance and installation flexibility.

1. Control pod is common with smaller ratings providing embedded Ethernet port and 5 slots for option modules, and can be remote mounted (up to 23 m) for hassle-free access to low voltage control.
2. Roll in/out design makes the drive easy to install and service by allowing complete removal from cabinet, providing generous room for wiring behind the drive. Power wiring can stay connected while unit is rolled out.
3. Adjustable terminals provide flexibility for wiring preferences such as top or bottom entry.
4. Integrated fusing eliminates need for separately mounted drive short circuit protection. Status is reported from the drive to ease troubleshooting.
5. Replaceable surge protector reduces downtime after incoming transient voltage events. Status is reported from the drive to ease troubleshooting.
6. Integrated DC link inductor enhances protection from power system events, and reduces input harmonics.
7. Sealed cooling channel uses external air for main cooling, reducing contamination exposure for electronics.
8. Modular construction allows fast and easy replacement of parts (e.g., main blower, capacitor assembly, circuit boards), minimizing production downtime.

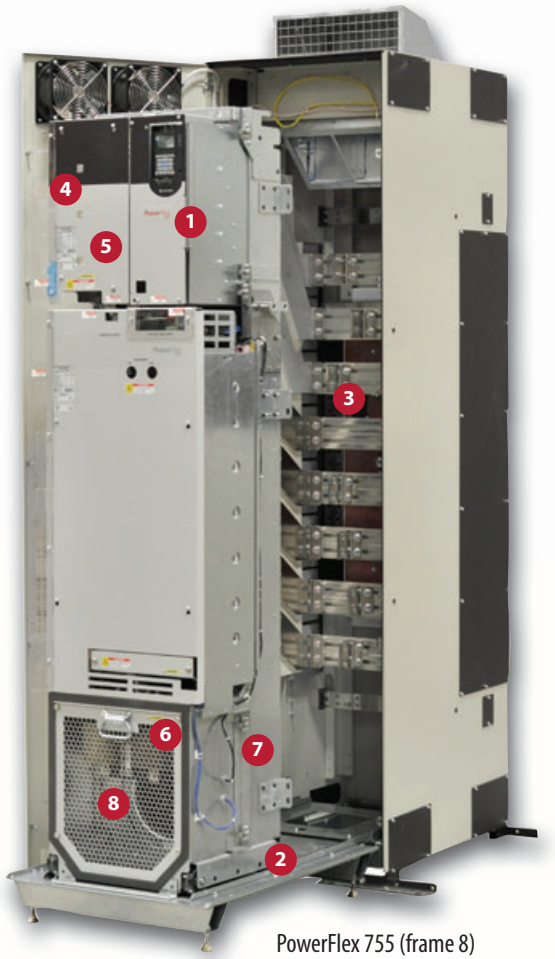

PowerFlex 755 (frame 8)
250 to 500 kW/350 to 600 Hp

PowerFlex 755 Drives with Option Bays

All PowerFlex 755 floor mount drives are available with a power option bay which provides a cost-effective solution for power disconnect and other popular power options. Based on customer specifications, components are correctly sized and optimized for the appropriate overload duty rating. By eliminating the need for accessory sizing and the possibility of installation errors, the option bay helps to reduce engineering and installation time and costs. Option Bays are available with both IP20 and IP54 environmental ratings.

View a video on the benefits of the PowerFlex 755 at:
http://ab.rockwellautomation.com/Drives/PowerFlex-755

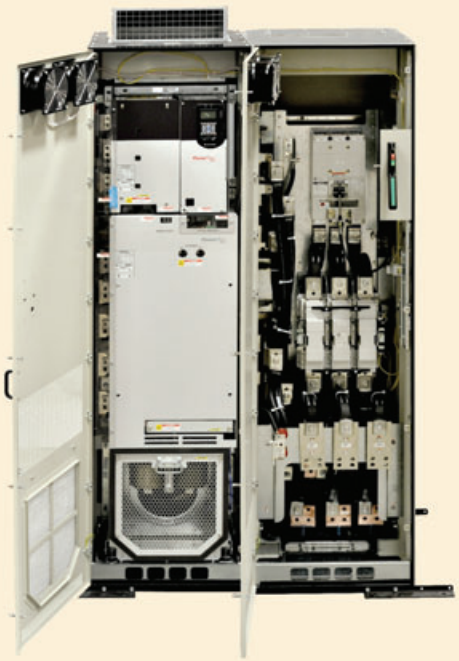

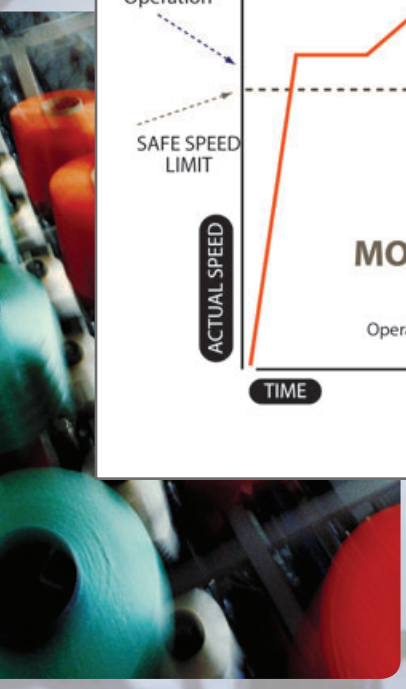

Safety

To help you protect personnel and assets while improving machine uptime, the PowerFlex 750-Series is available with two safety options:

1. Safe Torque-Off option or
2. Safe Speed Monitor option.

Safe Torque-Off is ideal for safety-related applications requiring removal of rotational power to the motor without removing power from the drive. Safe Torque-Off functionality offers the benefit of quick start-up after a demand on the safety system, helps reduce wear from repetitive start-up, and provides safety ratings up to and including SIL, PLe, and CAT 3.

The Safe Speed Monitor option provides a solution for applications that can benefit from access to a safety zone while there is limited motion. It helps you safely monitor and control the speed of your application, which allows operators to perform process or maintenance work without stopping the machine.

In addition, Safe Speed Monitor has an integrated monitoring relay to save additional panel-space installation labor. This option carries a safety rating up to and including SIL, PLe and Cat 4.

The Safe Speed Monitor option provides the following functionality:

- Safe Torque-Off
- Stop Categories 0, 1 and 2
- Safe Stop
- Safe Limited Speed
- Safe Maximum Speed
- Safe Maximum Acceleration
- Safe Direction
- Zero-Speed Monitoring
- Door Control and Monitoring
- Enabling switch input

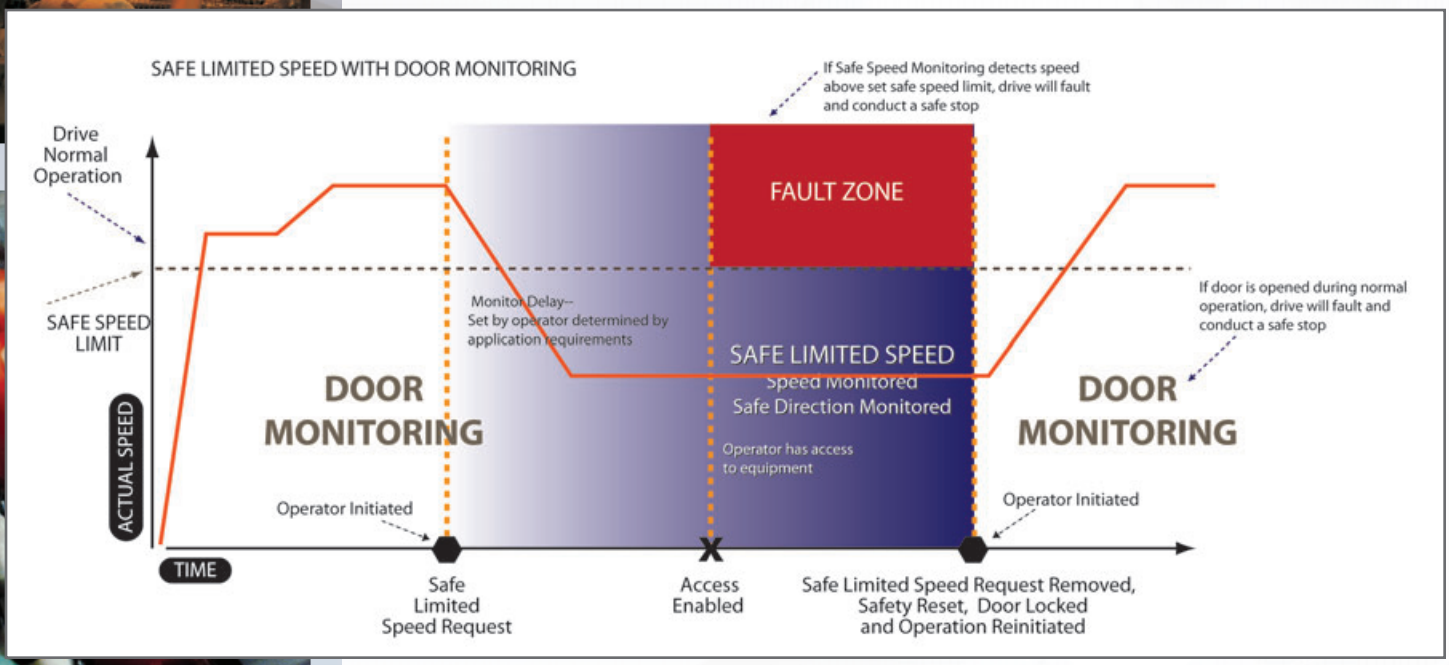

The Right Packaging for Your Application

Because application conditions and environments vary, PowerFlex 750-Series drives are available with a choice of packaging options. From highly flexible IP00 open styles to MCC-style cabinets and other features that help provide additional protection, there's a PowerFlex 750-Series drive with the right packaging to help you meet productivity goals.

PowerFlex 755 Floor Mount Drives with IP00, NEMA/UL Open Type Ratings

The PowerFlex 755 IP00, NEMA/UL Open Type drives are designed to provide packaging flexibility, including the option for either vertical or horizontal mounting orientations. This option is available in PowerFlex 755 floor mount drives with ratings up to 1500 kW/2000 Hp.

PowerFlex 750-Series Drives with IP54/UL Type 12 Ratings

For applications requiring additional protection from harsh environments, PowerFlex 753 and 755 drives are available with IP54/UL Type 12 enclosures. These enclosures help protect the drive from dust and splashing water and are appropriate for moderately harsh indoor environments.

PowerFlex 750-Series drives are available with a variety of enclosure options and ratings including IP00, IP20, IP54 (above left) and an extra protection flange mount (above right).

Enclosure	Rating	Temperature Range	PowerFlex 753	PowerFlex 755
Wall Mount	IP00, IP20, NEMA/UL Open Type	0 – 50 ˚C 32 – 122 ˚F	X	X
Extra Protection Flanged Mount	Front: IP00, IP20 & NEMA/UL Open Type Back: IP66 & NEMA/UL Type 4X	Front: 0 – 50 ˚C 32 – 122 ˚F Back: 0 – 40 ˚C 32 – 104 ˚F	X	X
Extra Protection Wall Mount	IP54 & NEMA/UL Type 12	0 – 40 ˚C 32 – 104 ˚F	X	X
NEMA 1 Kit	Converts Open Type to NEMA/UL Type	0 – 40 ˚C 32 – 104 ˚F	X	X
Floor Mount	IP20, IP54, IP00	0 – 40 ˚C 32 – 104 ˚F		X*

* Floor mount drives are available for PowerFlex 755 higher power ratings (above 250 kW/350 Hp) only.
PowerFlex 755 higher power drives (ratings above 250 kW/350 Hp) are available in IP00, IP20 and IP54 enclosure ratings.

Premier Integration Simplifies Development, Use and Maintenance

By combining the advanced capabilities of the Rockwell Automation Integrated Architecture™ and the communication capabilities of PowerFlex drives, you can achieve an exceptional level of integration between drives and controllers. The benefits of this integration range from reduced development time to simplified maintenance.

To achieve this integration, PowerFlex drives use add-on profiles in Studio 5000™ Logix Designer software (formerly RSLogix™ 5000) to streamline drive installation. Add-on profiles minimize the need to individually program the required parameters and tags. The result is simplified programming, which puts an end to the need to frequently refer back to user manuals for specific parameter and tag information. And all PowerFlex drives on EtherNet/IP are able to take advantage of these add-on profiles.

In addition, Automatic Device Configuration (ADC) support for the PowerFlex 750-Series drives – shown below – helps reduce downtime.

Easy-to-use tools help reduce development time and require no specialized knowledge – Wizards with advanced graphical interfaces walk you through drive parameter configuration.

Eliminate errors associated with using multiple software tools – Single development environment to configure and program your entire Logix drive system.

Access, edit and save drive information to the control system project with ease – Drive configuration is saved as part of the RSLogix project file (*.acd) and is also stored in the Logix controller, so there's no need to store and maintain multiple files – you only need one file.

Easily download global objects and faceplates – You can use the same tag names generated by the drive add-on profiles to utilize global objects and faceplates for a FactoryTalk® View HMI display

Easy to Maintain – Diagnostic, fault, alarm, and event information are integral to Studio 5000.

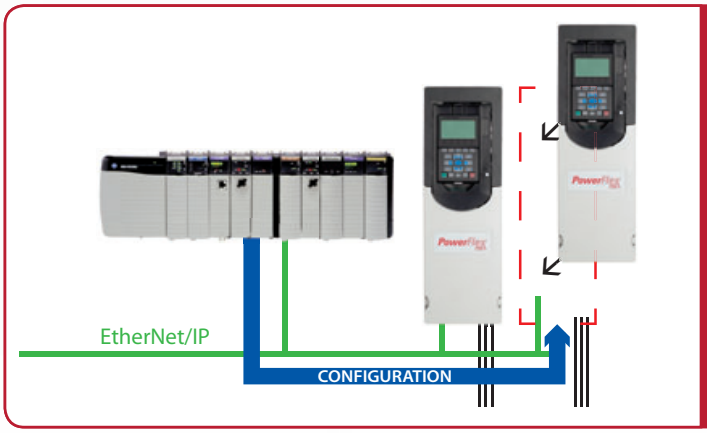

With Automatic Device Configuration (ADC), the Logix controller can automatically detect a replaced PowerFlex 753 or 755 drive and download all configuration parameters, eliminating the need for manual reconfiguration. (PowerFlex 753 AC drives require a dual-port EtherNet/IP communication card for ADC.)

DeviceLogix™ Control Technology

DeviceLogix control technology provides you with the flexibility to customize a drive to more closely match your application needs. DeviceLogix controls outputs and manages status information locally within the drive, allowing you to operate the drive independently or complementary to supervisory control, helping to improve system performance and productivity.

You can use the PowerFlex 750-Series DeviceLogix to:

- Speed reaction time by processing in the drive, which reduces dependency on network throughput
- Provide scaling, selector switches, or other data manipulations not already built into the drive
- Read inputs/write outputs and exclusively control the drive
- Provide an option for decision-making if communication is lost with main controller
- Control other PowerFlex drives via a Peer-to-Peer EtherNet/IP network

DeviceLogix is easily programmed via: RSLogix 5000 and DriveTools SP v 5.01.

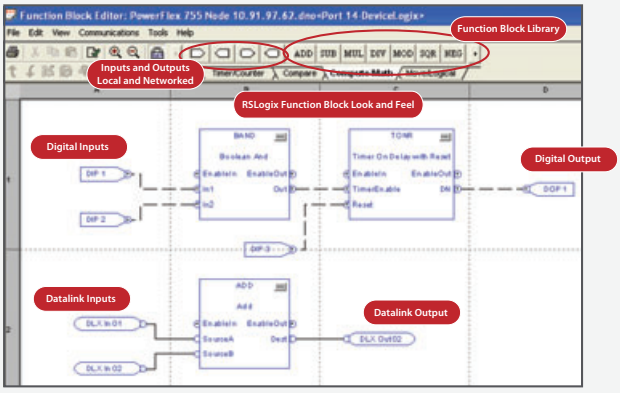

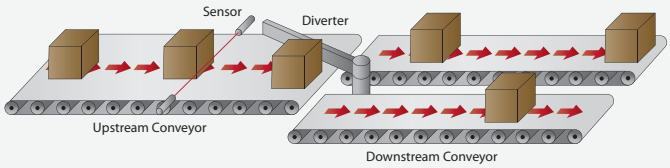

EtherNet/IP – A Single Network for Complete Machine Control

Connect Your Entire Enterprise

Benefit from the EtherNet/IP network for complete machine control that simplifies and enhances machine design.

- Low cost, high performance and easy to use as compared to a multi-network architecture
- Easily integrate any PowerFlex drive, I/O, smart actuators and any other EtherNet/IP connected device
- EtherNet/IP is an established, broadly-adopted network
- The PowerFlex 755 AC drive and Kinetix 6500 servo drive can reside on the same EtherNet/IP network and be programmed with a common set of motor control instructions available in ControlLogix and CompactLogix Programmable Automation Controllers

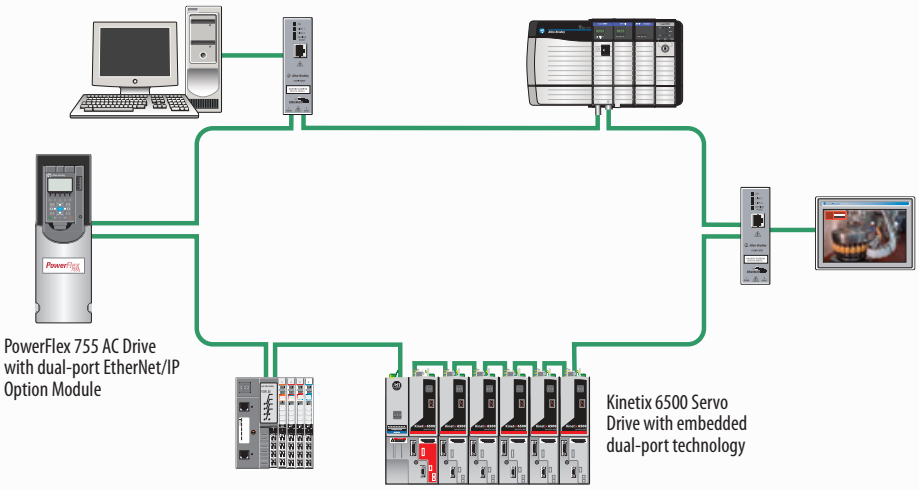

Device Level Ring (DLR) is an ODVA standard and provides fault tolerant connectivity for high drive availability. If one device on the EtherNet/IP network fails, the other devices are able to continue operation.

Dual-port EtherNet/IP Option Module for PowerFlex 750-Series AC Drives

The PowerFlex 750-Series Dual-port EtherNet/IP option module provides flexible and cost-effective ways to apply EtherNet/IP, and supports Ring, Linear and Star topologies as well as DLR functionality. DLR-based networks reduce configuration time and costs by minimizing the number of managed switches and reducing cabling needs. Users can create a single fault-tolerant DLR network that connects all components at the device level locally.

Information can be seamlessly communicated in real time to various levels of an organization, without requiring additional complexity. Getting real-time information at the right time and at the right levels of the manufacturing environment helps you enhance the agility of your business.

This solution supports optimal integration on a DLR level for the PowerFlex 755 via instructions embedded in the Logix controller, further enhancing integration into the Rockwell Automation Integrated Architecture. Only Allen-Bradley drives are able to offer optimal integration into the Integrated Architecture, providing simplified configuration, programming, commissioning, diagnostics and maintenance.

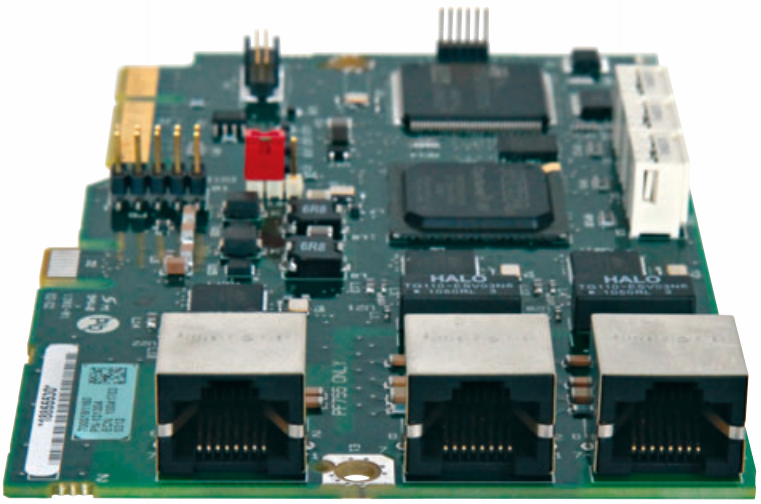

All PowerFlex 755 AC drives have a single embedded Ethernet port. This 750-Series option module provides the benefits of dual-port EtherNet/IP functionality for both the PowerFlex 753 and 755.

PowerFlex 753 and PowerFlex 755 AC Drive Specifications

Frame/Rating Cross-Reference						
	400V AC (540V DC) Input			480V AC (650V DC) Input		
Frame[1]	Amps	Normal Duty kW	Heavy Duty kW	Amps	Normal Duty Hp	Heavy Duty Hp
1	2.1	0.75	0.37	2.1	1	0.5
	3.5	1.5	0.75	3.4	2	1.5
	5	2.2	1.5	5	3	2
	8.7	4	2.2	8	5	3
	11.5	5.5	4	11	7.5	5
	15.4	7.5	5.5	14	10	7.5
2	2.1	0.75	0.75	2.1	1	1
	3.5	1.5	1.5	3.4	2	2
	5	2.2	2.2	5	3	3
	8.7	4	4	8	5	5
	11.5	5.5	5.5	11	7.5	7.5
	15.4	7.5	5.5	14	10	7.5
	22	11	7.5	22	15	10
3	30	15	11	27	20	15
	37	18.5	15	34	25	20
	43	22	18.5	40	30	25
4	60	30	22	52	40	30
	72	37	30	65	50	40
5	85	45	37	77	60	50
	104	55	45	96	75	60
6	140	75	55	125	100	75
	170	90	75	156	125	100
	205	110	90	186	150	125
	260	132	110	248	200	150
7	302	160	132	302	250	200
	367	200	160	361	300	250
	456	250	200	415	350	300

	600V AC, Three-Phase Drives				
	Output Amps[2]				
Frame	Cont.	1 Min.	3 Sec.	Normal Duty Hp	Heavy Duty Hp
3	1.7 (0.9)	1.9 (1.4)	2.6 (2.6)	1	0.5
	2.7 (1.7)	3.0 (2.6)	4.1 (4.6)	2	1
	3.9 (2.7)	4.3 (4.1)	5.9 (7.3)	3	2
	6.1 (3.9)	6.7 (5.9)	9.2 (10.5)	5	3
	9 (6.1)	9.9 (9.2)	12.1 (13.5)	7.5	5
	11 (9)	12.1 (13.5)	16.5 (24.3)	10	7.5
	17 (11)	18.7 (16.5)	25.5 (29.7)	15	10
	22 (17)	24 (26)	33 (46)	20	15
4	27 (22)	30 (33)	41 (59)	25	20
	32 (27)	35 (41)	48 (73)	30	25
5	41 (32)	45 (48)	62 (86)	40	30
	52 (41)	57 (62)	78 (111)	50	40

	600V AC Input					690V AC Input				
	Output Amps[2]			Normal Duty	Heavy Duty	Output Amps[2]			Normal Duty	Heavy Duty
Frame[1]	Cont.	1 Min.	3 Sec.	Hp	Hp	Cont.	1 Min.	3 Sec.	kW	kW
6	12 (9.1)	13.2 (13.7)	18 (18)	10	7.5	12 (9)	13.2 (13.5)	18 (18)	7.5	5.5
	18 (11.1)	19.8 (16.7)	27 (27)	15	10	15 (11.5)	16.5 (17.3)	22.5 (22.5)	11	7.5
	23 (18)	25.3 (27)	34.5 (34.5)	20	15	20 (15)	22 (22.5)	30 (30)	15	11
	24 (22)	26.4 (33)	36 (39.6)	20	20	23 (20)	25.3 (30)	34.5 (36)	18.5	15
	28 (23)	30.8 (34.5)	42 (42)	25	20	30 (23)	33 (34.5)	45 (45)	22	18.5
	33 (28)	36.3 (42)	49.5 (50.4)	30	25	34 (30)	37.4 (45)	51 (54)	30	22
	42 (33)	46.2 (49.5)	63 (63)	40	30	46 (34)	50.6 (51)	69 (69)	37	30
	53 (42)	58.3 (63)	79.5 (79.5)	50	40	50 (46)	55 (69)	75 (82.8)	45	37
	63 (52)	69.3 (78)	94.5 (94.5)	60	50	61 (50)	67.1 (75)	91.5 (91.5)	55	45
	77 (63)	84.7 (94.5)	116 (116)	75	60	82 (61)	90.2 (91.5)	123 (123)	75	55
	99 (77)	109 (116)	149 (149)	100	75	98 (82)	108 (123)	147 (148)	90	75
	125 (99)	138 (149)	188 (188)	125	100	119 (98)	131 (147)	179 (179)	110	90
	144 (125)	158 (188)	216 (225)	150	125	142 (119)	156 (179)	213 (214)	132	110
7	192 (144)	211 (216)	288 (288)	200	150	171 (142)	188 (213)	257 (257)	160	132
	242 (192)	266 (288)	363 (363)	250	200	212 (171)	233 (257)	318 (318)	200	160
	289 (242)	318 (318)	434 (436)	300	250	263 (212)	289 (289)	395 (395)	250	200

1 Frame ratings based on open type cabinet mount enclosures.
2 These drives have dual current ratings; one for normal duty applications, and one for heavy duty applications (in parenthesis). The drive may be operated at either rating.

PowerFlex 755 Floor Mount Drives*

380…400V AC, Three-phase and 540V DC Input Drives

Frame Size	Light Duty				Normal Duty				Heavy Duty			
	Output Amps				Output Amps				Output Amps			
	Cont.	1 Min.	3 Sec.	kW	Cont.	1 Min.	3 Sec.	kW	Cont.	1 Min.	3 Sec.	kW
8	540	594	NA	315	460	506	693	250	385	578	693	200
	585	644		315	540	594	821	315	456	684	821	250
	612	673		355	567	624	851	315	472	708	851	250
	750	825		400	650	715	975	355	540	810	975	315
	796	876		450	750	825	1125	400	585	878	1125	315
	832	915		450	770	847	1155	400	642	963	1155	355
9	1040	1144		560	910	1001	1365	500	750	1125	1365	400
	1090	1199		630	1040	1144	1584	560	880	1320	1584	500
	1175	1293		710	1090	1199	1638	630	910	1365	1638	500
	1465	1612		800	1175	1293	1872	710	1040	1560	1872	560
	1480	1628		850	1465	1612	2198	800	1090	1635	2198	630
	1600	1760		900	1480	1628	2220	850	1175	1763	2220	710
10	1715	1887		1000	1590	1749	2385	900	1325	1988	2385	710
	2330	2563		1400	2150	2365	3225	1250	1800	2700	3225	1000

480V AC, Three-phase and 650V DC Input Drives

Frame Size	Light Duty				Normal Duty				Heavy Duty			
	Output Amps				Output Amps				Output Amps			
	Cont.	1 Min.	3 Sec.	Hp	Cont.	1 Min.	3 Sec.	Hp	Cont.	1 Min.	3 Sec.	Hp
8	485	534	NA	400	430	473	666	350	370	555	666	300
	545	600		450	485	534	745	400	414	621	745	350
	590	649		500	545	600	818	450	454	681	818	350
	710	781		600	617	679	926	500	485	728	926	400
	765	842		650	710	781	1065	600	545	818	1065	450
	800	880		700	740	817	1110	650	617	926	1110	500
9	960	1056		800	800	880	1278	700	710	1065	1278	600
	1045	1150		900	960	1056	1440	800	795	1193	1440	700
	1135	1249		1000	1045	1150	1568	900	800	1200	1568	750
	1365	1502		1100	1135	1249	1728	1000	960	1440	1728	800
	1420	1562		1250	1365	1502	2048	1100	1045	1568	2048	900
	1540	1694		1350	1420	1562	2130	1250	1135	1703	2130	1000
10	1655	1821		1500	1525	1678	2288	1350	1270	1905	2288	1100
	2240	2464		2000	2070	2277	3105	1750	1730	2595	3105	1650

600V AC, Three-phase and 725V DC Input Drives

Frame Size	Light Duty				Normal Duty				Heavy Duty			
	Output Amps				Output Amps				Output Amps			
	Cont.	1 Min.	3 Sec.	Hp	Cont.	1 Min.	3 Sec.	Hp	Cont.	1 Min.	3 Sec.	Hp
8	355	391	NA	350	295	325	490	300	272	408	490	250
	395	435		400	355	391	533	350	295	443	533	300
	435	479		450	395	435	593	400	329	494	593	350
	460	506		500	435	479	639	450	355	533	639	350
	510	561		500	460	506	711	500	395	593	711	400
	545	600		550	510	561	765	500	425	638	765	450
9	690	759		700	595	655	918	600	510	765	918	500
	760	836		800	630	693	1071	700	595	893	1071	600
	835	919		900	760	836	1140	800	630	945	1140	700
	900	990		950	825	908	1260	900	700	1050	1260	750
	980	1078		1000	900	990	1368	950	760	1140	1368	800
	1045	1150		1100	980	1078	1470	1000	815	1223	1470	900
10	1220	1342		1200	1110	1221	1665	1100	920	1380	1665	1000
	1530	1683		1500	1430	1573	2145	1400	1190	1785	2145	1250

* A Roll-out Cart is required with Frame 8…10 drives to assist with power wiring and cabinet mounting.

PowerFlex 755 Floor Mount Drives*

690V AC, Three-phase and 932V DC Input Drives

Frame Size	Light Duty				Normal Duty				Heavy Duty			
	Output Amps				Output Amps				Output Amps			
	Cont.	1 Min.	3 Sec.	kW	Cont.	1 Min.	3 Sec.	kW	Cont.	1 Min.	3 Sec.	kW
8	330	363	NA	315	265	292	375	250	215	323	375	200
	370	407		355	330	363	473	315	265	398	473	250
	410	451		400	370	407	555	355	308	462	555	300
	460	506		450	415	457	639	400	370	555	639	355
	500	550		500	460	506	675	450	375	563	675	375
	530	583		530	500	550	750	500	413	620	750	400
9	650	715		630	590	649	885	560	460	690	885	450
	710	781		710	650	715	975	630	500	750	975	500
	790	869		800	710	781	1065	710	590	885	1065	560
	860	946		850	765	842	1170	750	650	975	1170	630
	960	1056		900	795	875	1350	800	750	1125	1350	710
	1020	1122		1000	960	1056	1440	900	795	1193	1440	800
10	1150	1265		1100	1040	1144	1560	1000	865	1298	1560	900
	1485	1634		1500	1400	1540	2100	1400	1160	1740	2100	1120

* A Roll-out Cart is required with Frame 8…10 drives to assist with power wiring and cabinet mounting.

Dimensions for PowerFlex 755 with IP00/IP20 Ratings***

Approximate Dimensions Millimeters (Inches)			
Frame	Height	Width	Depth
1	400.50 (15.77)	110 (4.33)	211 (8.31)
2	424.20 (16.7)	134.50 (5.30)	212 (8.35)
3	454 (17.87)	190 (7.48)	212 (8.35)
4	474 (18.66)	222 (8.74)	212 (8.35)
5	550 (21.65)	270 (10.63)	212 (8.35)
6	665.50 (26.20)	308 (12.13)	346.40 (13.64)
7	881.50 (34.70)	430 (16.93)	350 (13.78)
8	2453 (88.36)	600 (23.6)	600 (23.6)**
8	2453 (96.60)	600 (23.6)	800 (31.50)**
9	2453 (96.60)	1200 (47.20)	600 (23.6)**
9	2453 (96.60)	1200 (47.20)	800 (31.50)**
10	2453 (96.60)	1800 (70.90)	600 (23.60)**
10	2453 (96.60)	1800 (70.90)	800 (31.50)**

** Available in 600 mm and 800 mm depths to provide options based on cable entry and exit requirements. See publication PFLEX-SG002 or 750-TD001 for selection information.

***IP00 for frames 6 and 7

Energy Savings Calculators

See how installing a PowerFlex drive for your fan or pump applications can reduce energy costs when compared with a traditional flow control method.

Download the tools at:
http://www.rockwellenergycalc.com

Rockwell Automation, Inc. (NYSE:ROK), the world's largest company dedicated to industrial automation, makes its customers more productive and the world more sustainable. Throughout the world, our flagship Allen-Bradley® and Rockwell Software® product brands are recognized for innovation and excellence.

Follow ROKAutomation on Twitter. Connect with us on Facebook and LinkedIn.

Allen-Bradley, ControlLogix, CompactLogix, Connected Components Workbench, DeviceLogix, DriveExecutive, DriveObserver, DriveTools, FactoryTalk, Integrated Architecture, Kinetix, LISTEN. THINK. SOLVE., Micro800, PanelView, PowerFlex, Rockwell Software, RSLogix and Studio 5000 are trademarks of Rockwell Automation, Inc. Trademarks not belonging to Rockwell Automation are property of their respective companies. ControlNet, DeviceNet and EtherNet/IP are trademarks of the Open DeviceNet Vendor Association.

www.rockwellautomation.com

Power, Control and Information Solutions Headquarters

Americas: Rockwell Automation, 1201 South Second Street, Milwaukee, WI 53204-2496 USA, Tel: (1) 414.382.2000, Fax: (1) 414.382.4444
Europe/Middle East/Africa: Rockwell Automation NV, Pegasus Park, De Kleetlaan 12a, 1831 Diegem, Belgium, Tel: (32) 2 663 0600, Fax: (32) 2 663 0640
Asia Pacific: Rockwell Automation, Level 14, Core F, Cyberport 3, 100 Cyberport Road, Hong Kong, Tel: (852) 2887 4788, Fax: (852) 2508 1846

Publication 750-BR001A-EN-P – January 2013

Copyright © 2013 Rockwell Automation, Inc. All Rights Reserved. Printed in USA.

Thermal Edge Inc.™

TEMPERATURE CONTROL SOLUTIONS FOR ELECTRICAL ENCLOSURES

UL Listed Enclosure Air Conditioners

Fully Integrated Condensate Evaporation Package
Programmable Digital Controller
Thermal Expansion Valve
Narrow Design to fit onto a 12” Enclosure
Energy Efficiency - Low Running Amps

Get the Edge... Get Thermal Edge

Temperature Control Solutions for Electrical Enclosures

(972) 580-0200 or (888) 580-0202 • www.thermal-edge.com • thermalinfo@thermal-edge.com

MADE IN THE USA

Thermal Edge Inc.™

Get the Edge... Get Thermal Edge

Temperature Control Solutions for Electrical Enclosures

What Makes an Air Conditioner a Thermal Edge Air Conditioner?

There are three critical features that make a Thermal Edge Enclosure Air Conditioner different from any other line of air conditioners. **Standard on Every Unit:**

Drip-free Condensate Removal is Not Optional

Water is the by-product of every air conditioner. At Thermal Edge we understand that a puddle next to your sensitive electronic enclosure may be a problem. We eliminate this messy problem by changing the troublesome water back into a vapor and venting it out of your way. That means no puddles, stains or mess near your electrical enclosure, control system or production line. In addition, our condensate evaporation system precools the refrigerant which lowers the running amps and thus lowers your energy usage.

Condensate Evaporation Is Standard On Every Unit... **No Drain Tube is Needed**

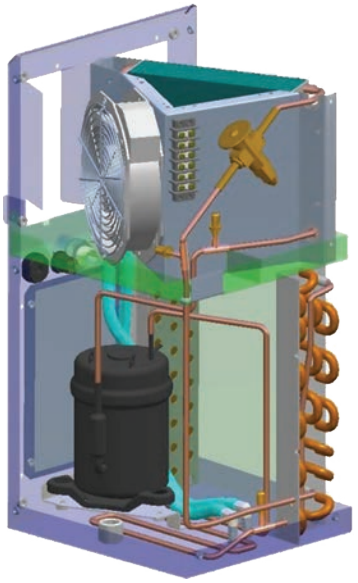

Thermal Expansion Valve Controls the Flow

Thermal Expansion Valves balance and modulate the refrigerant flow to the heat load by sensing the temperature of the refrigerant leaving the evaporator.

With Thermal Edge, You Have a Smarter Enclosure Air Conditioner

Digital, Programmable Controller:

- Fully programmable
- Built in alarms and alerts
- Will operate heating & cooling
- Standard on every air conditioner
- Ethernet, Modbus RTU and Ethernet/IP communication options
- Remote controller option places controller inside cabinet

CS Series Air Conditioners

- Smallest 2000 BTUH available
- Active Condensate Evaporation is standard
- Fits on a 7" or 10" deep enclosure
- Available in NEMA Types 12, 4, 4X
- Fully programmable digital controller with temperature and pressure monitors for a **smarter** air conditioner
- 120V, 230V

- 1000 BTUH
- 2000 BTUH

NE Series Air Conditioners

- Active Condensate Evaporation is standard
- Fits on a 12" deep enclosure
- Available in NEMA Types 12, 4, 4X and Hazardous Environment applications
- Fully programmable digital controller with temperature and pressure monitors for a **smarter** air conditioner
- 120V, 230V, 480V

- 1000 BTUH
- 1500 BTUH
- 2000 BTUH
- 3000 BTUH
- 4000 BTUH
- 5000 BTUH
- 6000 BTUH
- 8000 BTUH

TM Series Air Conditioners

- Top Mounted Enclosure Air Conditioners
- Active Condensate Evaporation is standard
- Available in NEMA Types 12, 4, 4X
- Fully programmable digital controller with temperature and pressure monitors for a **smarter** air conditioner
- 120V, 230V, 480V

- 6000 BTUH
- 8000 BTUH

HC Series Air Conditioners

- Active Condensate Evaporation is standard
- Available in NEMA Types 12, 4, 4X and Hazardous Environment applications
- Fully programmable digital controller with temperature and pressure monitors for a **smarter** air conditioner
- 120V, 230V, 480V

- 10,000 BTUH
- 12,000 BTUH
- 15,000 BTUH
- 20,000 BTUH

MADE IN THE USA

(972) 580-0200 or (888) 580-0202 • www.thermal-edge.com • thermalinfo@thermal-edge.com

Air Conditioner Product Line

Model	BTU / Hour	Voltage / Phase / Hz	Running Amps	Maximum Ambient Temp	Maximum Integrated Heat (Watts)	H x W x D	Ship Weight
NE010126	1,000	120/1/60	2.69	125°F	NA	22" x 11.8" x 8.5"	65
NE010236	1,000	230/1/60	1.99	125°F	NA	22" x 11.8" x 8.5"	67
CS011D48	1,000	48 VDC	3.7	125°F	NA	17" x 7" x 7"	43
CS011126	1,000	120/1/60	2.7	131°F	350	17" x 7" x 7"	45
NE015126	1,500	120/1/60	3.44	125°F	NA	22" x 11.8" x 8.5"	65
NE015236	1,500	230/1/60	2.67	125°F	NA	22" x 11.8" x 8.5"	67
NE020126	2,000	120/1/60	3.76	125°F	1000	32" x 11.8" x 9.5"	79
NE020236	2,000	230/1/60	3.07	125°F	1000	32" x 11.8" x 9.5"	86
NE020486	2,000	480/1/60	0.93	125°F	1000	38" x 11.8" x 9.5"	113
CS020126	2,000	120/1/60	3.36	131°F	500	20" x 10" x 10"	58
CS020236	2,000	230/1/60	2.0	131°F	500	20" x 10" x 10"	63
NE030126	3,000	120/1/60	5.15	125°F	1000	32" x 11.8" x 9.5"	80
NE030236	3,000	230/1/60	3.07	125°F	1000	32" x 11.8" x 9.5"	86
NE030486	3,000	480/1/60	1.51	125°F	1000	38" x 11.8" x 9.5"	113
NE040D48	4,000	48 VDC	22.3	131°F	NA	35.27" x 11.8" x 9.5"	120
NE040126	4,000	120/1/60	5.53	125°F	1000	32" x 11.8" x 9.5"	80
NE040236	4,000	230/1/60	3.07	125°F	1000	32" x 11.8" x 9.5"	86
NE040486	4,000	480/1/60	1.51	125°F	1000	38" x 11.8" x 9.5"	113
NE050126	5,000	120/1/60	7.26	125°F	1000	36" x 11.8" x 15.1"	111
NE050236	5,000	230/1/60	3.76	125°F	1000	36" x 11.8" x 15.1"	106
NE050486	5,000	480/1/60	1.44	125°F	1000	44.63" x 11.8" x 15.1"	150
NE060126	6,000	120/1/60	7.83	125°F	1000	36" x 11.8" x 15.1"	111
NE060236	6,000	230/1/60	4.8	125°F	1000	36" x 11.8" x 15.1"	112
NE060486	6,000	480/1/60	1.8	125°F	1000	44.63" x 11.8" x 15.1"	156
TM061126	6,000	120/1/60	10.6	131°F	1000	15.6" x 26.3" x 20.2"	163
TM061236	6,000	230/1/60	6.0	131°F	1000	15.6" x 26.3" x 20.2"	163
TM061486	6,000	480/1/60	3.0	131°F	1000	15.6" x 26.3" x 20.2"	206
NE080126	8,000	120/1/60	7.83	125°F	1000	36" x 11.8" x 15.1"	117
NE080236	8,000	230/1/60	4.8	125°F	1000	36" x 11.8" x 15.1"	118
NE080486	8,000	480/1/60	1.8	125°F	1000	44.63" x 11.8" x 15.1"	156
TM081126	8,000	120/1/60	11.2	131°F	1000	15.6" x 26.3" x 20.2"	163
TM081236	8,000	230/1/60	7.0	131°F	1000	15.6" x 26.3" x 20.2"	163
TM081486	8,000	480/1/60	3.5	131°F	1000	15.6" x 26.3" x 20.2"	206
HC101126	10,000	120/1/60	19.4	131°F	1500	48" x 15.9" x 15.1"	182
HC101236	10,000	230/1/60	8.2	131°F	1500	48" x 15.9" x 15.1"	186
HC101486	10,000	480/1/60	3.93	131°F	1500	57.6" x 15.9" x 15.1"	275
HC121126	12,000	120/1/60	19.4	131°F	1500	48" x 15.9" x 15.1"	185
HC121236	12,000	230/1/60	8.2	131°F	1500	48" x 15.9" x 15.1"	183
HC121486	12,000	480/1/60	3.93	131°F	1500	57.6" x 15.9" x 15.1"	280
HC151236	15,000	230/1/60	11.3	131°F	1500	48" x 15.9" x 15.1"	190
HC151486	15,000	480/1/60	5.41	131°F	1500	57.6" x 15.9" x 15.1"	290
HC201236	20,000	230/1/60	15.3	131°F	1500	56.1" x 23" x 15"	225
HC201486	20,000	480/1/60	7.7	131°F	1500	65.7" x 23" x 15"	380

Advantages

- Systems engineered to maintain lower running amps for higher efficiency
- Options and Accessories designed to solve critical applications such as Corrosive or Hazardous Environments
- Customer Service Reps answering your calls
- A website that is easy to navigate AND solutions that are easy to find
- Equipment tested to perform and built to last
- Units designed with our customers' applications and environments in mind

NO WATER DRIPS FROM THERMAL EDGE ENCLOSURE AIR CONDITIONERS

Thermal Edge Inc.™

Get the Edge... Get Thermal Edge

Temperature Control Solutions for Electrical Enclosures

Air Conditioner Options

- Electrostatic Coil Coating to protect from corrosion caused by a salt or chemical environment
- Integrated Heat Packages to provide total temperature control for your enclosure, not just from the heat of summer but from the cold of winter
- Dry Contact Options to allow the use of alarms, lights and notifications
- External Heat Control to support use of an externally mounted heater in the enclosure
- 316 Stainless Steel for applications where 304 is not suitable
- Hazardous Location for Class 1, Division 2 Groups B, C & D applications
- Vibration Package allows for enclosure cooling on cranes, moving vehicles or other difficult locations
- 2" Deep Extended Filter Media for applications like flour, cement or coal when a standard filter will load too quickly
- Remote Controller Option to place our digital controller inside the electrical enclosure when the environment requires more security
- Redundant System Package for critical applications, when enclosure cooler failure is not an option. This system operates two air conditioners with specially programmed controllers that toggle the two units to operate them alternately to guarantee that your enclosure always stays at its required temperature and provide automatic backup
- The Universal Mounting Plate allows mounting the Thermal Edge Enclosure Air Conditioner onto an enclosure that formerly held a different air conditioner model

At Thermal Edge, we understand your environment and the issues that your environment creates for your electrical enclosures and systems. Everything we build has been designed and tested to meet your strict requirements for quality and durability.
Food & Beverage, Paper & Pulp, Chemical, Gas, Cement or Telecom, Thermal Edge has a system to handle the problem of controlling the environment of your sensitive and important operating systems.

Thermal Edge air conditioners can be built to operate on the voltage and frequency available wherever you need them.

Use the ETM Calculator and Product Recommender to Find the Right Cooling Capacity and Products for Your Application
http://thermal-edge.com/enclosure-temperature-management-calculator

Contact us today for Temperature Control Solutions for Your Electrical Enclosures

888-580-0202
Email: ThermalInfo@Thermal-Edge.com

All information subject to change without notice.

Certified ISO 9001:2008 Company

Brochure #1
2017-06-05

Made in the USA

NE015

1500 BTUH
Indoor/Outdoor, NEMA Types 12, 4 & 4X Available

Engineered & manufactured to endure the most difficult of environments and applications. Thermal Edge air conditioners will exceed environmental requirements in applications like *Steel, Food Processing, Petro-Chemical, Cement, Paper & Pulp and Plastics.*

11.8" wide

No water drips from Thermal Edge enclosure air conditioners

Digital Temperature Controller
- *Programmable set point and temperature controls*
- *Visible Error and/or alarm messaging*
- *System status indication & keypad lockout function*

Active Condensate Evaporation System
- *Constant elimination of condensate*
- *Increases unit efficiency by pre-cooling refrigerant*

Key Design Features
- *Sloped top to allow for water runoff*
- *Designed with rigid chassis and seam welded shroud*
- *Thoughtful interior design for easy maintenance*
- *Narrow body style fits on 12" enclosure*

Unit Efficiency
- *Temperature operated blower control reduces power inrush and saves energy*
- *Highly efficient rotary compressor*
- *Fully insulated & sealed cabinet*
- *Thermal Expansion Valve to maintain cooling capacity over a broad ambient temperature range*

Compressor Protection System
- *High & Low refrigerant cutouts with fault indication*
- *Compressor anti short cycle protection*
- *Compressor run capacitors reduce power inrush, save energy and increase compressor life*

Options:
- Dry Contact Alarm Capabilities
- Open Door Kill Switch
- Corrosive Environment Package
- Low Ambient Packages
- Remote Monitoring Options

Model	BTU/ Hour	Material	Voltage/ Hz.	Running Amps	Max. Ambient Temperature	H x W x D	Weight (lbs.) Unit / Ship
NE01512612	1500	Powder coated steel	120/1/60	3.44	125°F	22" x 11.8" x 8.5"	51 / 65
NE01512604	1500	Powder coated steel	120/1/60	3.44	125°F	22" x 11.8" x 8.5"	51 / 65
NE0151264X	1500	Stainless steel	120/1/60	3.44	125°F	22" x 11.8" x 8.5"	51 / 65
NE01523612	1500	Powder coated steel	230/1/60	2.67	125°F	22" x 11.8" x 8.5"	53 / 67
NE01523604	1500	Powder coated steel	230/1/60	2.67	125°F	22" x 11.8" x 8.5"	53 / 67
NE0152364X	1500	Stainless steel	230/1/60	2.67	125°F	22" x 11.8" x 8.5"	53 / 67

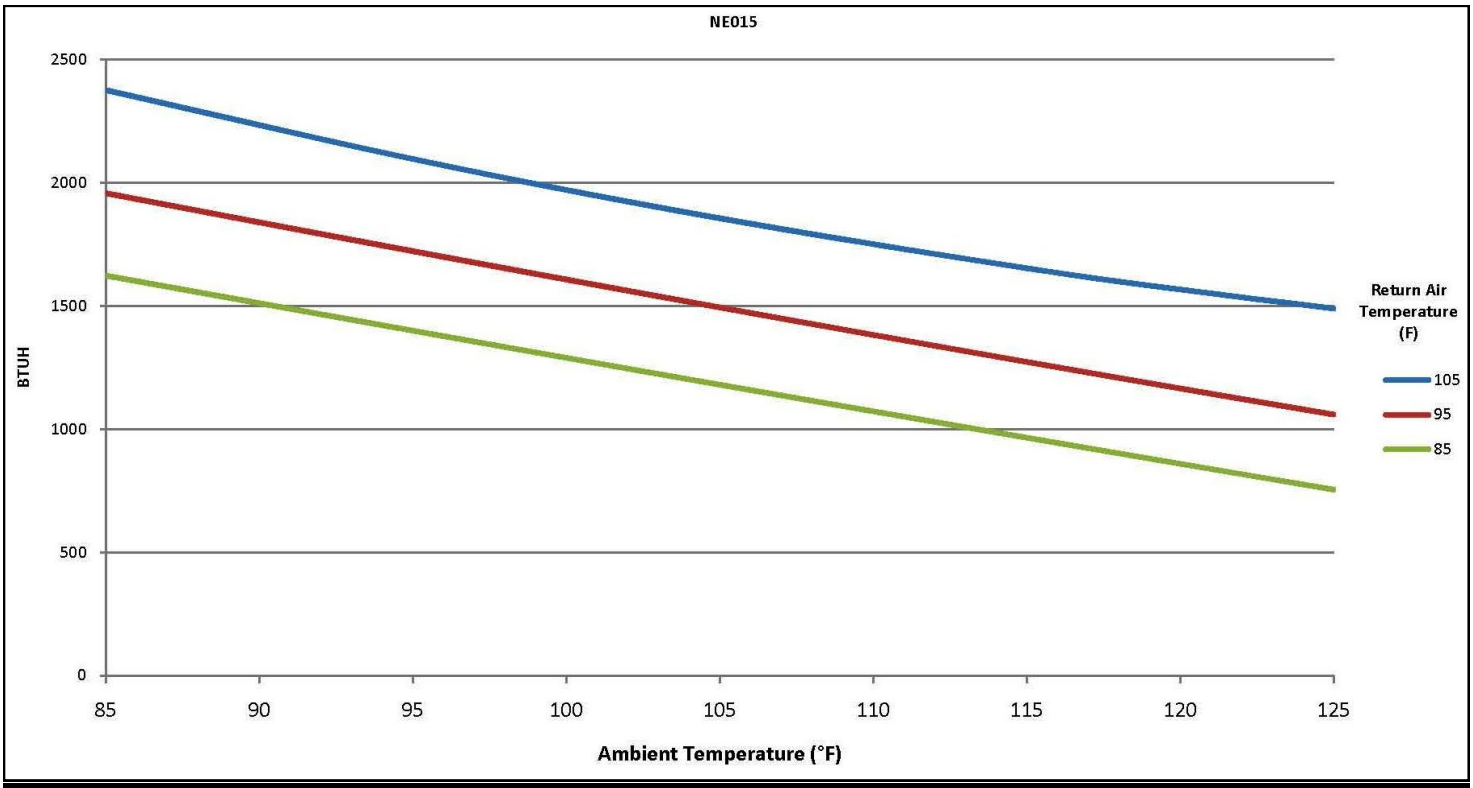

Testing done under controlled conditions. Actual performance may vary

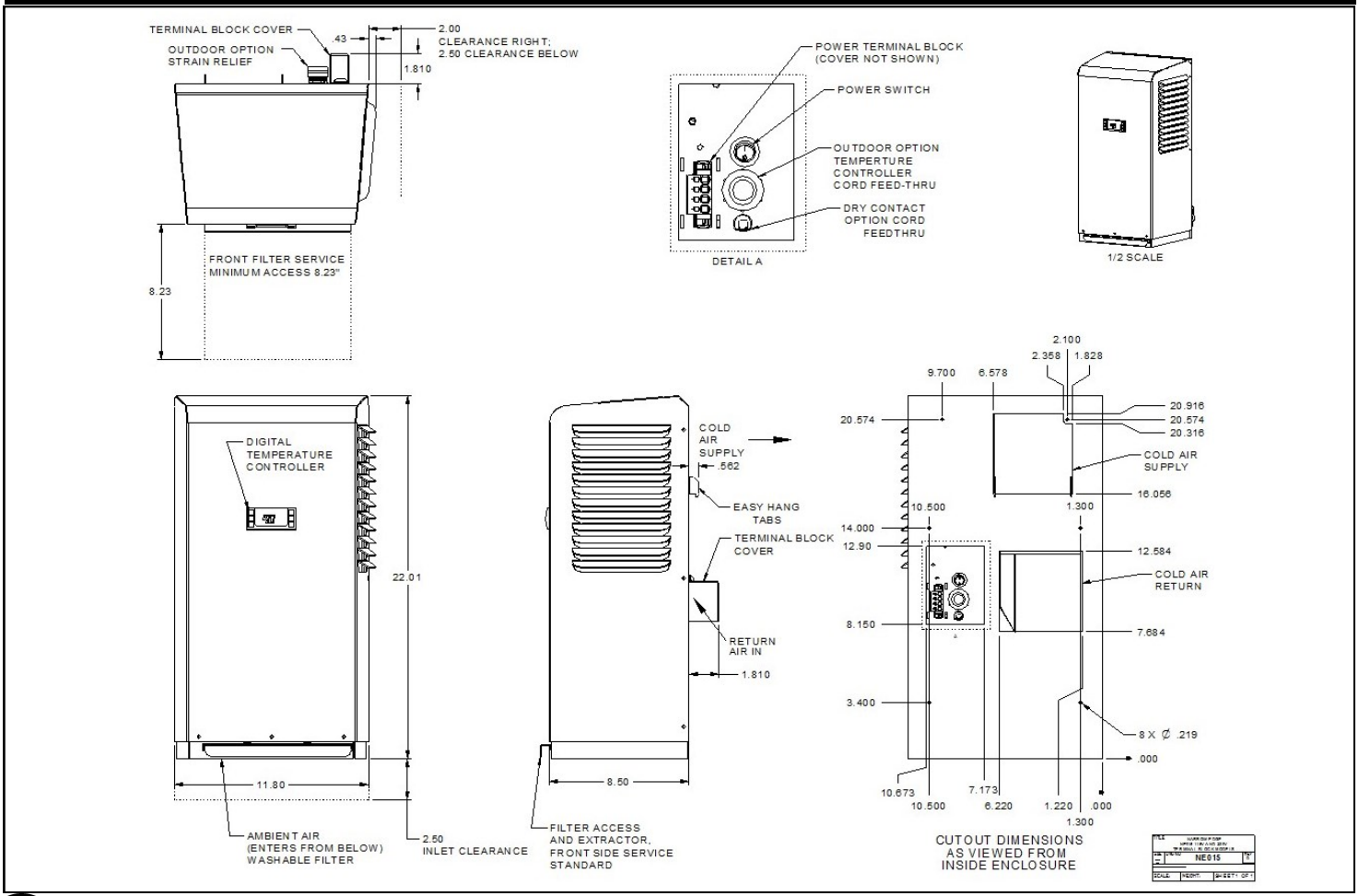

2017-05-22

ATTENTION: *If ordering a replacement for a Thermal Edge air conditioner, please include the part number and serial number of the unit being replaced in your order. This will assure that we ship a replacement that is compatible with the cutout dimensions and power connection features of the older model.*

c UL us LISTED

UL File # SA32252

All information subject to change without notice

DEPARTMENT OF THE ARMY
ALBUQUERQUE DISTRICT, CORPS OF ENGINEERS
ALBUQERQUE DISTRICT OFFICE
4101 JEFFERSON PLAZA NE
ALBUQUERQUE, NM 87109

SUBMITTAL REVIEW VERIFICATION SHEET

PROJECT TITLE: Kirtland BFF Mid-Plume Pump and Treat System Expansion
CONTRACT NUMBER: W912DR-12-D-0006 DM01
DATE RECEIVED: 10-13-2017
DATE REVIEWED: 10-17-2017

DESCRIPTION OF ITEMS REVIEWED:

1. Well #106239 PLC/ Instrumentation

NO EXCEPTIONS TAKEN.	
EXCEPTIONS AS NOTED ON DRAWINGS AND/OR ATTACHED SHEETS(S). RESUBMISSION NOT REQUIRED.	**X**
EXCEPTIONS AS NOTED ON DRAWINGS AND/OR ATTACHED SHEETS(S). RESUBMISSION REQUIRED.	
RECEIPT ACKKNOWLEDGED.	

Notes:

24VAC Actuator was selected (on page 25) Model Number: 70-24-0201H. The drawings and the other pages of submittal calls out a 120 VAC Actuator, Model Number: 70-0201H. Actuator should be 120 VAC.

Is there Instrumentation Diagram (P&ID) to show how all system components will be installed?

NOTE: ITEMS REVIEWED AS TO GENERAL LAYOUT ONLY. DIMENSIONS AND QUANTITIES NOT CHECKED. REVIEW DOES NOT RELIEVE CONTRACTOR OF RESPONSIBILITIES FOR ANY ERRORS WHICH MAY EXIST AS CONTRACTOR SHALL BE RESPONSIBLE FOR DIMENSIONS AND DESIGN OF ADEQUATE CORRECTIONS, DETAILS AND SATISFACTORY CONSTRUCTION OF WORK.

SIGNATURE SANCHEZ.AMY.ELIZABETH.1454434338 Digitally signed by SANCHEZ.AMY.ELIZABETH.1454434338 DN: c=US, o=U.S. Government, ou=DoD, ou=PKI, ou=USA, cn=SANCHEZ.AMY.ELIZABETH.1454434338 Date: 2017.10.17 15:22:11 -06'00' **DATE** 10/17/2017

EA Engineering, Science, and Technology, Inc., PBC

Submittal Review Sheet 8

Project Name: **Kirtland BFF Mid-Plume Pump and Treat System Expansion**				Date Received: **10/12/2017**	
Project Owner: **Kirtland Air Force Base**				Checked By: **Tyler Curley**	
Contractor: **Techsas Inc.**	Engineer: **EA Engineering, Science and Technology, Inc., PBC.**			Log Page: **NA**	
Address: **4819 West Bayshore Drive** **Bacliff, TX 77518**	Address: **320 Gold Ave. SW, Suite 1300** **Albuquerque, NM 87102**			EA No.: 62599DM01	
				Spec. Section: **00 00 00**	
				Drawing/Detail No.:	
ATTN: Ed Butler	ATTN: **Devon Jercinovic**			1st Sub	Re-Sub
Date Transmitted: **10/13/2017**	Prev. Transmittal Date:				

Item No.	No. Copies	Description	Manufacturer	Mfg/Vendor Dwg or Detail	Action Taken*
9	1	PLC and Instrumentation	Various	Various	**A**

The Action Designated Above is in Accordance with the Following Legend:

A – Furnish as Submitted
B – Furnish as Noted
C – Revise and Re-submit
1. Not enough information for review.
2. No reproducible submitted.
3. Copies illegible.
4. Not enough copies submitted.
5. Wrong sequence number.
6. Wrong resubmittal number.
7. Wrong Spec. Section.
8. Wrong form used.
9. See Comments.

D – Rejected
E – Engineer's Review not Required
1. Submittal not required.
2. Supplemental Information. Submittal retained for Information purposes only.
3. Information reviewed and approved on prior submittal.
4. See Comments.

Review is for general compliance with Contract Documents. No responsibility is assumed for correctness of dimensions or detail. Contractor is required to specify deviations from contract requirements. Lack of exceptions noted by Engineer does not waive Contractor's obligation to comply with Drawings and Specifications.

Comments:
The components of this submittal are consistent with the components used throughout the existing system.

By: _____ Date: 10/13/17

Distribution: [1] Contractor [1] Engineer [1] Owner

TRANSMITTAL DOCUMENT

Date:	**10/11/2017**	**From:**	**Ed Butler**
To:	**EA Engineering, Science, and Technology, Inc., 320 Gold Ave. SW, Suite 1300 Albuquerque, NM 87102 Devon Jercinovic**	**Job Name:**	**Kirtland AFB, NM Bulk Fuels Facility**
		Reference:	
		Transmittal Method:	**E-mail**
		Sent By:	**Ed Butler**

Submittal	Dwg. Number	Item Description
9	E-502	Well #106239 PLC/ Instrumentation Submittal

Submittal includes the following:
Pressure transmitter
Level Transmitter
Control Valve
Leak Switches/Relays
Magnetic Flow Meter
CP-105 Control Panel Materials

Ed Butler
TECHSAS, Inc.
4819 West Bayshore Drive
Bacliff, TX 77518

"I hereby certify that the (equipment) (material) (article) shown and marked in this submittal is that proposed to be incorporated with the Contract, is in compliance with the contract drawings and specification, can be installed in the allocated spaces, and is submitted for Contractor approval.

Certifiedby _____.
(Signature when applicable) Date: _____.

Kirtland Air Force Base
Bulk Fuels Facility
Mid Plum Pump & Treat System
Well 106239

I&C Controls Submittal

Sub Contractor: I&C Solutions
4485 Irving Blvd NW
Albuquerque, NM 87114
(505) 821-8960

Submittal includes the following

Pressure transmitter
Level Transmitter
Control Valve
Leak Switches/Relays
Magnetic Flow Meter
CP-105 Control Panel Materials

Submitted 9/30/17

© Siemens AG 2011

Tags PIT-5001

SITRANS P DS III
Technical description

Overview

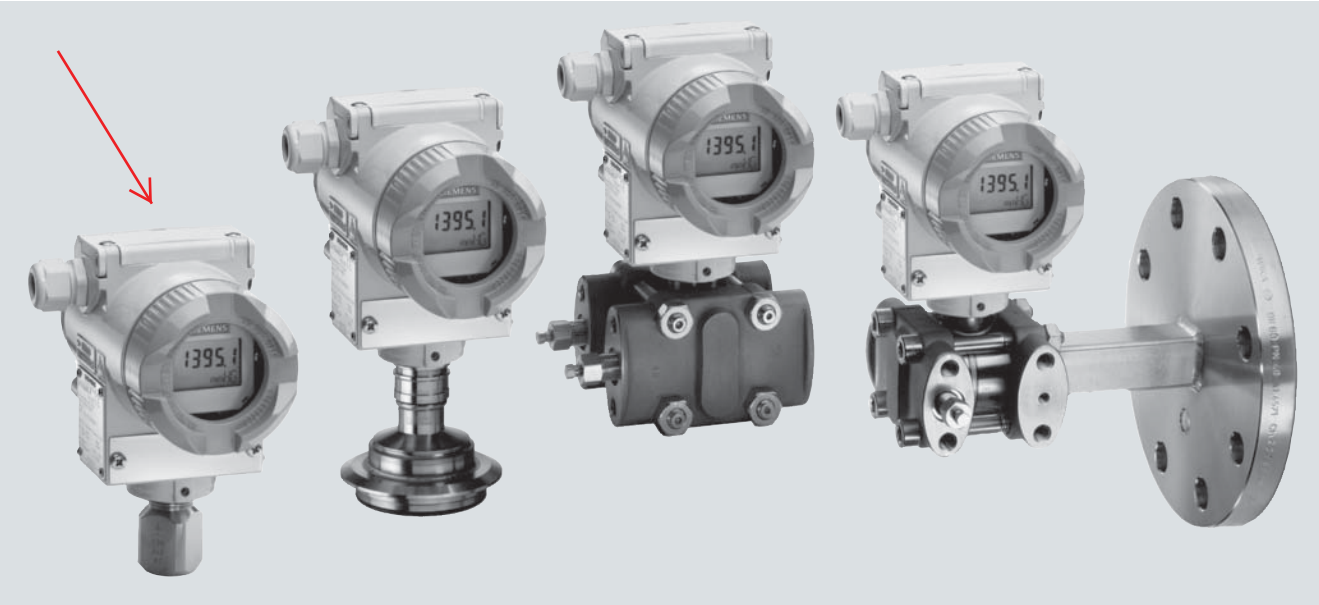

SITRANS P DS III pressure transmitters are digital pressure transmitters featuring extensive user-friendliness and high accuracy. The parameterization is performed using control keys or via HART communication, PROFIBUS-PA or FOUNDATION Fieldbus interface.

Extensive functionality enables the pressure transmitter to be precisely adapted to the plant's requirements. Operation is very simple in spite of the numerous setting options.

Transmitters with type of protection "Intrinsic safety" and "Explosion-proof" may be installed within potentially explosive atmospheres (zone 1) or in zone 0. The transmitters are provided with an EC type examination certificate and comply with the corresponding harmonized European standards (ATEX).

The transmitters can be equipped with various designs of remote seals for special applications such as the measurement of highly viscous substances.

Various versions of the DS III pressure transmitters are available for measuring:

- Gauge pressure
- Absolute pressure
- Differential pressure
- Level
- Volume level
- Mass level
- volume flow
- Mass flow

Benefits

- High quality and service life
- High reliability even under extreme chemical and mechanical loads
- For aggressive and non-aggressive gases, vapors and liquids
- Extensive diagnosis and simulation functions
- Separate replacement of measuring cell and electronics without recalibration
- Minimum conformity error
- Small long-term drift
- Wetted parts made of high-grade materials (e.g. stainless steel, Hastelloy, gold, Monel, tantalum)
- Infinitely adjustable span from 0.15 psi to 10153 psi (0.01 bar to 700 bar) for DS III with HART communication
- Nominal measuring range from 14.5 psi to 10153 psi (1 bar to 700 bar) for DS III PA (PROFIBUS PA) and FF (FOUNDATION Fieldbus)
- High measuring accuracy
- Parameterization over control keys and HART communication, PROFIBUS PA communication or FOUNDATION Fieldbus interface.

Application

The pressure transmitters of the DS III series, can be used in industrial areas with extreme chemical and mechanical loads. Electromagnetic compatibility in the range 10 kHz to 1 GHz makes the DS III pressure transmitters suitable for locations with high electromagnetic emissions.

Pressure transmitters with type of protection "Intrinsic safety" and "Explosion-proof" may be installed within potentially explosive atmospheres (zone 1) or in zone 0. The pressure transmitters are provided with an EC type examination certificate and comply with the corresponding harmonized European standards (ATEX).

Pressure transmitters with the type of protection "Intrinsic safety" for use in zone 0 may be operated with power supply units of category "ia" and "ib".

The transmitters can be equipped with various designs of remote seals for special applications such as the measurement of highly viscous substances.

The pressure transmitter can be operated locally over 3 control buttons or programmed externally over HART communication or over PROFIBUS PA or FOUNDATION Fieldbus interface.

© Siemens AG 2011

Pressure transmitter for gauge pressure

Measured variable: Gauge pressure of aggressive and non-aggressive gases, vapors and liquids.

Span (infinitely adjustable)
for DS III HART: 0.15 psi to 10153 psi (0.01 bar to 700 bar)

Nominal measuring range
for DS III PA and FF: 14.5 psi to 10153 psi (1 bar to 700 bar)

Pressure transmitters for absolute pressure

Measured variable: Absolute pressure of aggressive and non-aggressive gases, vapors and liquids.

Span (infinitely adjustable)
for DS III HART: 0.12 ... 1450 psi a (8.3 mbar a ... 100 bar a)

Nominal measuring range
for DS III PA and FF: 3.63...1450 psi a (250 mbar a...100 bar a)

There are two series:

- Gauge pressure series
- Differential pressure series

Pressure transmitters for differential pressure and flow

Measured variables:

- Differential pressure
- Small positive or negative pressure
- Flow q ~ √Δp (together with a primary differential pressure device (see Chap.ter "Flow Meters"))

Span (infinitely adjustable)
for DS III HART: 0.0145 ... 435 psi (1 mbar ... 30 bar)

Nominal measuring range
for DS III PA and FF: 0.29 ... 435 psi (20 mbar ... 30 bar)

Pressure transmitters for level

Measured variable: Level of aggressive and non-aggressive liquids in open and closed vessels.

Span (infinitely adjustable)
for DS III HART: 0.363 ... 72.5 psi (25 mbar ... 5 bar)

Nominal measuring range
for DS III PA and FF: 3.63 ... 72.5 psi (250 mbar ... 5 bar)

Nominal diameter of the mounting flange

- DN 80 or DN 100
- 3 inch or 4 inch

In the case of level measurements in open containers, the low-pressure connection of the measuring cell remains open (measurement "compared to atmospheric").

In the case of measurements in closed containers, the lower-pressure connection has to be connected to the container in order to compensate the static pressure.

The wetted parts are made from a variety of materials, depending on the degree of corrosion resistance required.

Design

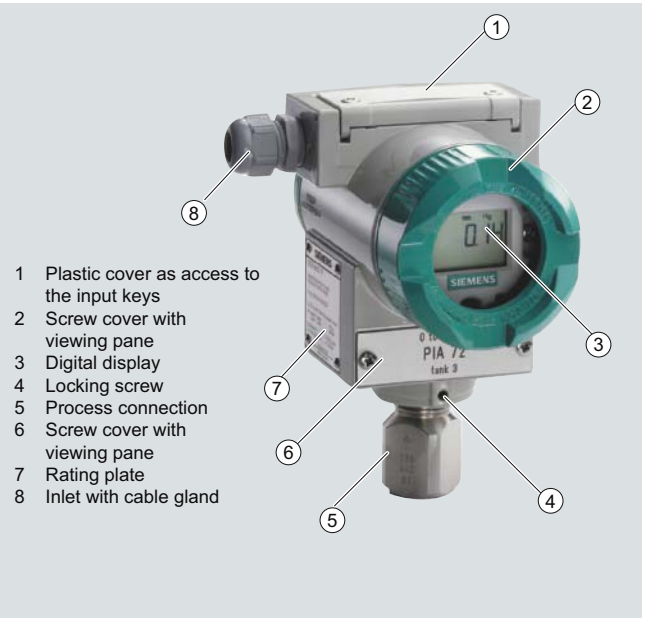

1 Plastic cover as access to the input keys
2 Screw cover with viewing pane
3 Digital display
4 Locking screw
5 Process connection
6 Screw cover with viewing pane
7 Rating plate
8 Inlet with cable gland

Front view

The transmitter consists of various components depending on the order. The possible versions are listed in the ordering information. The components described below are the same for all transmitters.

The rating plate (7, Figure "Front view") with the Order No. is located on the side of the housing. The specified number together with the ordering information provide details on the optional design details and on the possible measuring range (physical properties of built-in sensor element).

The approval label is located on the opposite side.

The housing is made of die-cast aluminium or stainless steel precision casting. A round cover (6) is screwed on at the front and rear of the housing. The front cover can be fitted with a viewing pane so that the measured values can be read directly on the digital display. The inlet (8) for the electrical connection is located either on the left or right side. The unused opening on the opposite side is sealed by a blanking plug. The protective earth connection is located on the rear of the housing.

The electrical connections for the power supply and screen are accessible by unscrewing the rear cover. The bottom part of the housing contains the measuring cell with process connection (5). The measuring cell is prevented from rotating by a locking screw (4). As the result of this modular design, the measuring cell and the electronics can be replaced separately from each other. The set parameter data are retained.

At the top of the housing is a plastic cover (1), which hides the input keys.

Example for an attached measuring point label

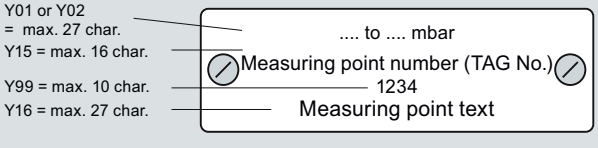

© Siemens AG 2011

2

Function

Operation of electronics with HART communication

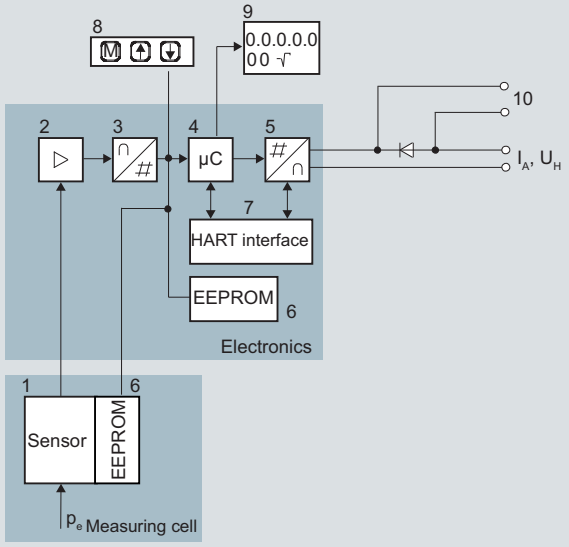

1 Measuring cell sensor
2 Instrument amplifier
3 Analog-to-digital converter
4 Microcontroller
5 Digital-to-analog converter
6 One non-volatile memory each in the measuring cell and electronics
7 HART interface
8 Three input keys (local operation)
9 Digital display
10 Diode circuit and connection for external ammeter
I_A Output current
U_H Power supply
P_e Input variable

Function diagram of electronics

The bridge output voltage created by the sensor (1, Figure "Function diagram of the electronics") is amplified by the measuring amplifier (2) and digitized in the analog-to-digital converter (3). The digital information is evaluated in a microcontroller, its linearity and temperature response corrected, and converted in a digital-to-analog converter (5) into an output current of 4 to 20 mA.

The diode circuit (10) protects against incorrect polarity.

The data specific to the measuring cell, the electronics data, and the parameter data are stored in the two non-volatile memories (6). The one memory is coupled to the measuring cell, the other to the electronics. As the result of this modular design, the electronics and the measuring cell can be replaced separately from each other.

Using the 3 input keys (8) you can parameterize the pressure transmitter directly at the measuring point. The input buttons can also be used to control the view of the results, the error messages and the operating modes on the digital display (9).

The HART modem (7) permits parameterization using a protocol according to the HART specification.

The pressure transmitters with spans ≤ 63 bar measure the input pressure compared to atmosphere, transmitters with spans ≥ 160 bar compared to vacuum.

Operation of electronics with PROFIBUS PA communication

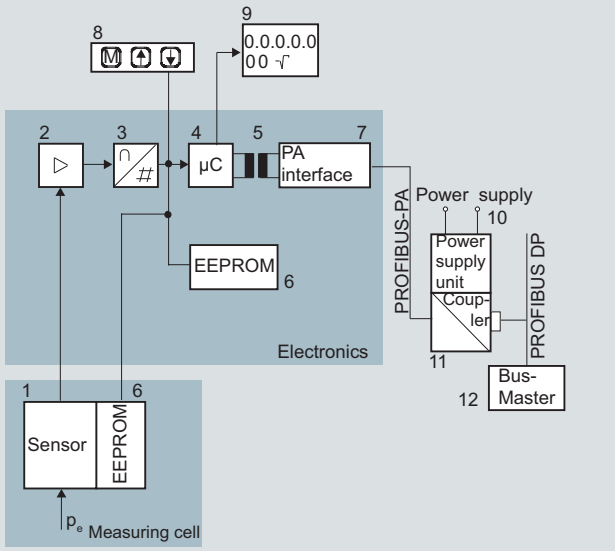

1 Measuring cell sensor
2 Instrument amplifier
3 Analog-to-digital converter
4 Microcontroller
5 Electrical isolation
6 One non-volatile memory each in the measuring cell and electronics
7 PROFIBUS-PA interface
8 Three input keys (local operation)
9 Digital display
10 Power supply
11 DP/PA coupler or link
12 Bus master
p_e Input variable

Function diagram of electronics

The bridge output voltage created by the sensor (1, Figure "Function diagram of the electronics") is amplified by the measuring amplifier (2) and digitized in the analog-to-digital converter (3). The digital information is evaluated in the microcontroller, its linearity and temperature response corrected, and provided on the PROFIBUS PA through an electrically isolated PA interface (7).

The data specific to the measuring cell, the electronics data, and the parameter data are stored in the two non-volatile memories (6). The one memory is coupled to the measuring cell, the other to the electronics. As the result of this modular design, the electronics and the measuring cell can be replaced separately from each other.

Using the three input buttons (8) you can parameterize the pressure transmitter directly at the measuring point. The input buttons can also be used to control the view of the results, the error messages and the operating modes on the digital display (9).

The results with status values and diagnostic values are transferred by cyclic data transmission on the PROFIBUS PA. Parameterization data and error messages are transferred by acyclic data transmission. Special software such as SIMATIC PDM is required for this.

© Siemens AG 2011

Operation of electronics with FOUNDATION Fieldbus communication

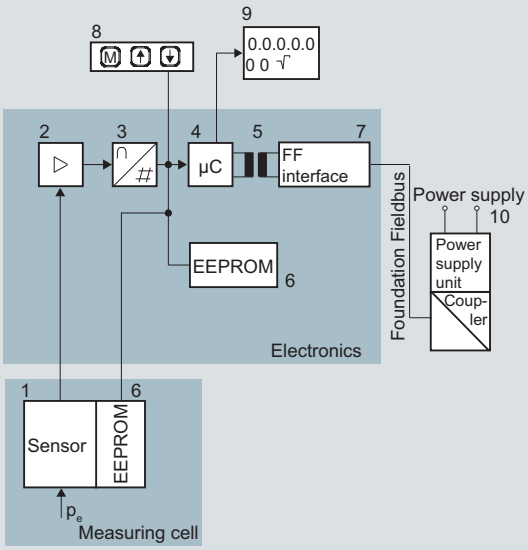

1	Measuring cell sensor	8	Three input keys (local operation)
2	Instrument amplifier	9	Digital display
3	Analog-to-digital converter	10	Power supply
4	Microcontroller		
5	Electrical isolation	p_e	Input variable
6	One non-volatile memory each in the measuring cell and electronics		
7	FF interface		

Function diagram of electronics

The bridge output voltage created by the sensor (1, Figure "Function diagram of electronics") is amplified by the measuring amplifier (2) and digitized in the analog-to-digital converter (3). The digital information is evaluated in the microcontroller, its linearity and temperature response corrected, and provided on the FOUNDATION Fieldbus through an electrically isolated FOUNDATION Fieldbus interface (7).

The data specific to the measuring cell, the electronics data, and the parameter data are stored in the two non-volatile memories (6). The one memory is coupled to the measuring cell, the other to the electronics. As a result of this modular design, the electronics and the measuring cell can be replaced separately from each other.

Using the three input buttons (8) you can parameterize the pressure transmitter directly at the measuring point. The input buttons can also be used to control the view of the results, the error messages and the operating modes on the digital display (9).

The results with status values and diagnostic values are transferred by cyclic data transmission on the FOUNDATION Fieldbus. Parameterization data and error messages are transferred by acyclic data transmission. Special software such as National Instruments Configurator is required for this.

Mode of operation of the measuring cells

Measuring cell for gauge pressure

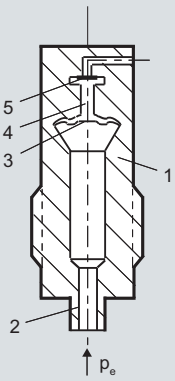

1	Measuring cell
2	Process connection
3	Seal diaphragm
4	Filling liquid
5	Silicon pressure sensor
p_e	Pressure as input variable

Measuring cell for gauge pressure, function diagram

The pressure p_e is applied through the process connection (2, Figure "Measuring cell for gauge pressure, function diagram) to the measuring cell (1). This pressure is subsequently transmitted further through the seal diaphragm (3) and the filling liquid (4) to the silicon pressure sensor (5) whose measuring diaphragm is then flexed. This changes the resistance of the four piezo-resistors fitted in the diaphragm in a bridge circuit. This change in resistance results in a bridge output voltage proportional to the absolute pressure.

Measuring cell for gauge pressure with front-flush diaphragm

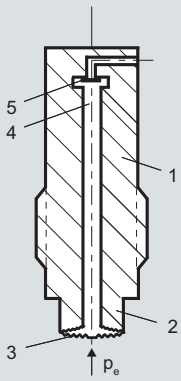

1	Measuring cell
2	Process connection
3	Seal diaphragm
4	Filling liquid
5	Silicon pressure sensor
p_e	Pressure as input variable

Measuring cell for gauge pressure, with front-flush diaphragm for paper industry, function diagram

The pressure $_p$e is applied through the process connection (2, Figure "Measuring cell for gauge pressure, with front-flush diaphragm for paper industry, function diagram") to the measuring cell (1). This pressure is subsequently transmitted further through the seal diaphragm (3) and the filling liquid (4) to the silicon pressure sensor (5) whose measuring diaphragm is then flexed. This changes the resistance of the four piezo-resistors fitted in the diaphragm in a bridge circuit. This change in resistance results in a bridge output voltage proportional to the absolute pressure.

© Siemens AG 2011

Measuring cell for absolute pressure from gauge pressure series

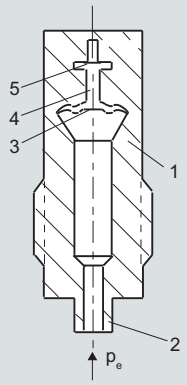

1 Measuring cell
2 Process connection
3 Seal diaphragm
4 Filling liquid
5 Silicon absolute pressure sensor
p_e Absolute pressure as input variable

Measuring cell for absolute pressure from the pressure series, function diagram

The absolute pressure $_p$e is transmitted through the seal diaphragm (3, Figure "Measuring cell for absolute pressure from pressure series, gauge pressure, function diagram ") and the filling liquid (4) to the silicon absolute pressure sensor (5) whose measuring diaphragm is then flexed. This changes the resistance of the four piezo-resistors fitted in the diaphragm in a bridge circuit. This change in resistance results in a bridge output voltage proportional to the absolute pressure.

Measuring cell for absolute pressure from differential pressure series

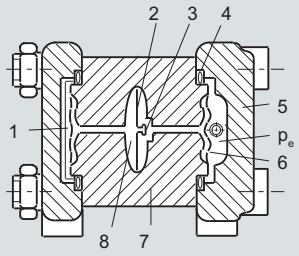

1 Reference vacuum
2 Overload diaphragm
3 Silicon pressure sensor
4 O-ring
5 Process flange
6 Seal diaphragm
7 Body of measuring cell
8 Filling liquid
p_e Absolute pressure as input variable

Measuring cell for absolute pressure from differential pressure series, function diagram

The input pressure p_e is transmitted through the seal diaphragm (6, Figure "Measuring cell for absolute pressure from differential pressure series, function diagram") and the filling liquid (8) to the silicon pressure sensor (3).

The difference in pressure between the input pressure p_e and the reference vacuum (1) on the low-pressure side of the measuring cell flexes the measuring diaphragm. This changes the resistance of the four piezo-resistors fitted in the diaphragm in a bridge circuit. This change in resistance results in a bridge output voltage proportional to the absolute pressure.

An overload diaphragm is installed to provide protection from overloads. If the measuring limits are exceeded, the overload diaphragm (2) is flexed until the seal diaphragm rests on the body of the measuring cell (7), thus protecting the silicon pressure sensor from overloads.

Measuring cell for differential pressure and flow

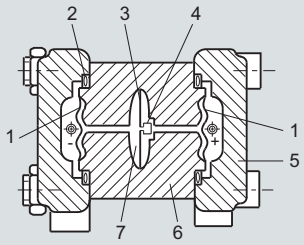

1 Seal diaphragm
2 O-ring
3 Overload diaphragm
4 Silicon pressure sensor
5 Process flange
6 Body of measuring cell
7 Filling liquid

Measuring cell for differential pressure and flow, function diagram

The differential pressure is transmitted through the seal diaphragms (1, Figure "Measuring cell for differential pressure and flow, function diagram") and the filling liquid (7) to the silicon pressure sensor (4).

The measuring diaphragm is flexed by the applied differential pressure. This changes the resistance of the four piezo-resistors fitted in the diaphragm in a bridge circuit. This change in resistance results in a bridge output voltage proportional to the absolute pressure.

An overload diaphragm is installed to provide protection from overloads. If the measuring limits are exceeded, the overload diaphragm (2) is flexed until the seal diaphragm rests on the body of the measuring cell (7), thus protecting the silicon pressure sensor from overloads.

Measuring cell for level

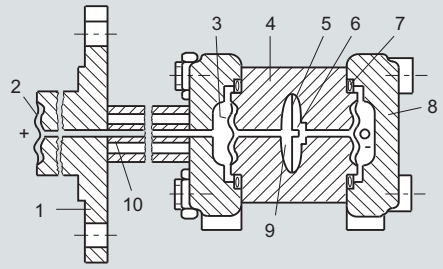

1 Flange with tube
2 Seal diaphragm on mounting flange
3 Seal diaphragm
4 Body of measuring cell
5 Overload diaphragm
6 Silicon pressure sensor
7 O-ring
8 Process flange
9 Filling liquid
10 Capillary with filling liquid of mounting flange

Measuring cell for level, function diagram

The input pressure (hydrostatic pressure) acts hydraulically on the measuring cell through the seal diaphragm on the mounting flange (2, Figure "Measuring cell for level, function diagram"). This differential pressure is subsequently transmitted further through the measuring cell (3) and the filling liquid (9) to the silicon pressure sensor (6) whose measuring diaphragm is then flexed.

This changes the resistance of the four piezo-resistors fitted in the diaphragm in a bridge circuit.

This change in resistance results in a bridge output voltage proportional to the differential pressure.

An overload diaphragm is installed to provide protection from overloads. If the measuring limits are exceeded, the overload diaphragm (2) is flexed until the seal diaphragm rests on the body of the measuring cell (7), thus protecting the silicon pressure sensor from overloads.

© Siemens AG 2011

Parameterization DS III

Depending on the version, there are a range of options for parameterizing the pressure transmitter and for setting or scanning the parameters.

Parameterization using the pushbuttons (local operation)

With the input buttons you can easily set the most important parameters without any additional equipment.

Parameterization using HART communication

Parameterization using HART communication is performed with a HART communicator or a PC.

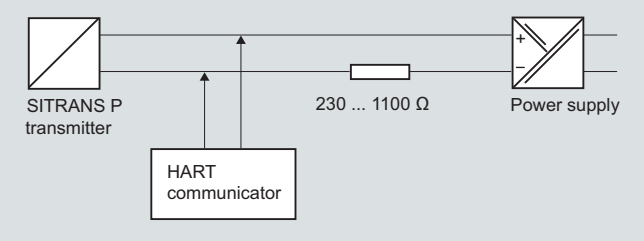

Communication between a HART communicator and a pressure transmitter

When parameterizing with the HART communicator, the connection is made directly to the 2-wire cable.

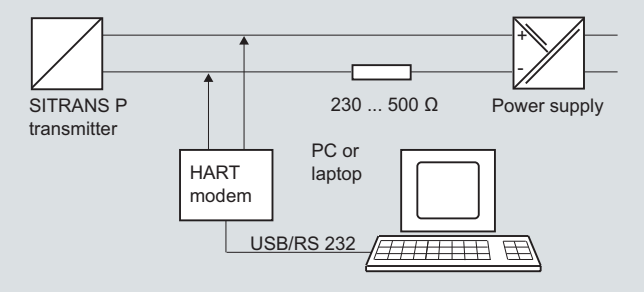

HART communication between a PC communicator and a pressure transmitter

When parameterizing with a PC, the connection is made through a HART modem.

The signals needed for communication in conformity with the HART 5.x or 6.x protocols are superimposed on the output current using the Frequency Shift Keying (FSK) method.

Adjustable parameters, DS III HART

Parameters	Pushbuttons (DS III HART)	HART communication
Start of scale	x	x
Full-scale value	x	x
Electrical damping	x	x
Start-of-scale value without application of a pressure ("Blind setting")	x	x
Full-scale value without application of a pressure ("Blind setting")	x	x
Zero adjustment	x	x
current transmitter	x	x
Fault current	x	x
Disabling of buttons, write protection	x	x[1)]
Type of dimension and actual dimension	x	x
Linear or square root output	x[2)]	x[2)]
Characterizer setup		x
Freely-programmable LCD		x
Diagnostic functions		x

[1)] Cancel apart from write protection
[2)] Only differential pressure

Diagnostic functions for DS III HART

- Zero correction for position
- Event counter
- Transmitter alarms
- Saturation alarm
- Min/Max registers
- Simulation functions
- Maintenance timer

Available physical units of display for DS III HART

Table style: Technical specifications 2

Physical variable	Physical dimensions
Pressure (setting can also be made in the factory)	Pa, MPa, kPa, bar, mbar, torr, atm, psi, g/cm^2, kg/cm^2, inH_2O, inH_2O (4 °C), mmH_2O, ftH_2O (20 °C), inHg, mmHg
Level (height data)	m, cm, mm, ft, in
Volume	m^3, dm^3, hl, yd^3, ft^3, in^3, US gallon, Imp. gallon, bushel, barrel, barrel liquid
Mass	g, kg, t, lb, Ston, Lton, oz
volume flow	m^3/d, m^3/h, m^3/s, l/min, l/s, ft^3/d, ft^3/min, ft^3/s, US gallon/min, US gallon/s
Mass flow	t/d, t/h, t/min, kg/d, kg/h, kg/min, kg/s, g/d, g/h, g/min, g/s, lb/d, lb/h, lb/min, lb/s, LTon/d, LTon/h, STon/d, STon/h, STon/min
Temperature	K, °C, °F, °R
Miscellaneous	%, mA

Parameterization through PROFIBUS PA interface

Fully digital communication through PROFIBUS PA, profile 3.0, is particularly user-friendly. The PROFIBUS puts the DS III PA is in connection with a process control system, e.g. SIMATIC PSC 7. Communication is possible even in a potentially explosive environment.

For parameterization through PROFIBUS you need suitable software, e.g. SIMATIC PDM (Process Device Manager).

Parameterization through FOUNDATION Fieldbus interface

Fully digital communication through FOUNDATION Fieldbus is particularly user-friendly. Through the FOUNDATION Fieldbus the DS III FF is connected to a process control system. Communication is possible even in a potentially explosive environment.

For parameterization through the FOUNDATION Fieldbus you need suitable software, e.g. National Instruments Configurator.

Adjustable parameters for DS III PA and FF

Parameters	Push-buttons	PROFIBUS PA and FOUNDATION Fieldbus interface
Electrical damping	x	x
Zero adjustment (correction of position)	x	x
Buttons and/or function disabling	x	x
Source of measured-value display	x	x
Physical dimension of display	x	x
Position of decimal point	x	x
Bus address	x	x
Linear or square root output	x	x
Characterizer setup		x
Freely-programmable LCD		x
Diagnostics functions		x

© Siemens AG 2011

SITRANS P DS III
Technical description

Diagnostic functions for DS III PA and FF

- Event counter
- Min/Max registers
- Maintenance timer
- Simulation functions
- Zero correction for position
- Transmitter alarms
- Saturation alarm

Physical dimensions available for the display

Physical variable	Physical dimensions
Pressure (setting can also be made in the factory)	MPa, kPa, Pa, bar, mbar, torr, atm, psi, g/cm^2, kg/cm^2, mmH_2O, mmH_2O (4 °C), inH_2O, in$H_2$0 (4 °C), ftH_2O (20 °C), mmHg, inHg
Level (height data)	m, cm, mm, ft, in, yd
Volume	m^3, dm^3, hl, yd^3, ft^3, in^3, US gallon, Imp. gallon, bushel, barrel, barrel liquid
volume flow	m^3/s, m^3/min, m^3/h, m^3/d, l/s, l/min, l/h, l/d, Ml/d, ft^3/s, ft^3/min, ft^3/h, ft^3/d, US gallon/s, US gallon/min, US gallon/h, US gallon/d, bbl/s, bbl/min, bbl/h, bbl/d
Mass flow	g/s, g/min, g/h, g/d, kg/s, kg/min, kg/h, kg/d, t/s, t/min, t/h, /t/d, lb/s, lb/min, lb/h, lb/d, STon/s, STon/min, STon/h, STon/d, LTon/s, LTon/min, LTon/h, LTon/d
Total mass flow	t, kg, g, lb, oz, LTon, STon
Temperature	K, °C, °F, °R
Miscellaneous	%

© Siemens AG 2015

Selection and Ordering data		Article No.
Pressure transmitter for gauge pressure, SITRANS P DS III with HART	↗	7MF4033 -
↗ Click on the Article No. for the online configuration in the PIA Life Cycle Portal.		
Measuring cell filling	**Measuring cell cleaning**	
Silicone oil	normal	1
Inert liquid[1]	grease-free to cleanliness level 2	3
Measuring span (min. ... max.)		
0.01 ... 1 bar	(0.15 ... 14.5 psi)	B
0.04 ... 4 bar	(0.58 ... 58 psi)	C
0.16 ... 16 bar	(2.32 ... 232 psi)	D
0.63 ... 63 bar	(9.14 ... 914 psi)	E
1.6 ... 160 bar	(23.2 ... 2320 psi)	F
4.0 ... 400 bar	(58.0 ... 5802 psi)	G
7.0 ... 700 bar	(102.0 ...10153 psi)	J
Wetted parts materials		
Seal diaphragm	Process connection	
Stainless steel	Stainless steel	A
Hastelloy	Stainless steel	B
Hastelloy	Hastelloy	C
Version as diaphragm seal [2) 3) 4) 5)]		Y
Process connection		
• Connection shank G½B to EN 837-1		0
• Female thread ½-14 NPT		1
• Stainless steel oval flange with process connection (Oval flange has no female thread)		
- Mounting thread $^{7}/_{16}$-20 UNF to IEC 61518		2
- Mounting thread M10 to DIN 19213		3
- Mounting thread M12 to DIN 19213		4
• Male thread M20 x 1.5		5
• Male thread ½ -14 NPT		6
Non-wetted parts materials		
• Housing made of die-cast aluminium		0
• Housing stainless steel precision casting[6)]		3
Version		
• Standard versions		1
• International version, English label inscriptions, documentation in 5 languages on CD (no Order code selectable)		2
Explosion protection		
• None		A
• With ATEX, Type of protection:		
- "Intrinsic safety (Ex ia)"		B
- "Explosion-proof (Ex d)"[7)]		D
- "Intrinsic safety and flameproof enclosure" (Ex ia + Ex d)"[8)]		P
- "Ex nA/ic (Zone 2)"[9)]		E
- "Intrinsic safety, explosion-proof enclosure and dust explosion protection (Ex ia + Ex d + Zone 1D/2D)"[8)10)]		R
• FM + CSA intrinsic safe (is)		F
• FM + CSA (is + ep) + Ex ia + Ex d (ATEX)[10)]		S
• With FM + CSA, Type of protection:		
- "Intrinsic Safe und Explosion Proof (is + xp)"[7)]		NC
Electrical connection / cable entry		
• Screwed gland Pg 13.5 (adapter)[11)]		A
• Screwed gland M20 x1 .5		B
• Screwed gland ½-14 NPT		C
• Han 7D plug (plastic housing) incl. mating connector[11)]		D
• M12 connectors (stainless steel)[11)12)]		F

Selection and Ordering data	Article No.
Pressure transmitter for gauge pressure, SITRANS P DS III with HART	7MF4033 -
Display	
• Without display	0
• Without visible display (display concealed, setting: mA)	1
• With visible display (setting: mA)	6
• with customer-specific display (setting as specified, Order code "Y21" or "Y22" required)	7

Power supply units see Chap. 7 "Supplementary Components".

Included in delivery of the device:
- Brief instructions (Leporello)
- CD-ROM with detailed documentation

1) For oxygen application, add Order code E10.

2) When the manufacture's certificate (calibration certificate) has to be ordered for transmitters with diaphragm seals according to IEC 60770-2, it is recommended only to order this certificate exclusively with the diaphragm seals. The measuring accuracy of the total combination is certified here.

3) If the acceptance test certificate 3.1.is ordered for the transmitter with mounted diaphragm seals this certificate must also be ordered with the respective remote seals.

4) The diaphragm seal is to be specified with a separate order number and must be included with the transmitter order number, for example 7MF403.-..Y..-.... and 7MF4900-1...-.B

5) The standard measuring cell filling of configurations with remote seals (Y) is silicone oil.

6) Not in conjunction with Electrical connection "Screwed gland Pg 13.5" and "Han7D plug".

7) Without cable gland, with blanking plug

8) With enclosed cable gland Ex ia and blanking plug

9) Configurations with HAN and M12 connectors are only available in Ex ic.

10) Only in connection with IP65.

11) Only in connection with Ex approval A, B or E.

12) M12 delivered without cable socket

Tags LT-5010

In-Situ

Innovations in Water Monitoring

Spec Sheet

Level TROLL® 400, 500 & 700 Data Loggers

Get water level data the way you want it, when you want it with industry-leading water level/pressure and temperature data loggers. By partnering with In-Situ, you receive durable Level TROLL® Data Loggers that provide years of service, accurate results, intuitive software, and real-time functionality.

Be Effective

- **Increase productivity:** Reduce training and installation time with In-Situ intuitive software platform and integrated components. Patented twist-lock connectors, included on Level TROLL Loggers and RuggedCable® Systems, ensure error-free deployments.
- **Streamline analysis and reporting:** Automate water level corrections and post-processing, graph data, and accelerate report generation with Win-Situ® Software. Easily export data to Excel,® a web-based management service, or data analysis software.
- **Set up real-time networks:** Access data 24/7 and receive event notifications when you connect data loggers to Tube and Cube systems, radios, or other third-party data collection platforms. Get decision quality data when, where, and how you need it with HydroVu Data Services. Control gates, pumps, alarms, and other equipment by using built-in Modbus/RS485, SDI-12, or 4-20 mA communication protocols.

Be Reliable

- **Deploy in all environments:** Install loggers in fresh water, saltwater, and contaminated waters. Solid titanium and sealed construction outperforms and outlasts coated data loggers.
- **Log accurate data:** Get optimal accuracy under all operating conditions. Sensors undergo NIST®-traceable factory calibration across the full pressure and temperature range. For applications requiring the highest levels of accuracy, use a vented (gauged) system.
- **Get long-lasting operation:** Reduce trips to the field with low-power loggers that typically operate for 10 years.

Be In-Situ

- Receive **free**, 24/7 technical support and online resources.
- Order data loggers and accessories from the In-Situ website.
- Get guaranteed 7-day service for maintenance (U.S.A. only).

Applications

- **Aquifer characterization: slug tests & pumping tests**
- **Coastal: tide/harbor levels & wetland/estuary research**
- **Hydrologic events: crest stage gages, storm surge monitoring, & flood control systems**
- **Long-term, real-time groundwater & surface water monitoring**
- **Mining & remediation**

CALL OR CLICK TO PURCHASE OR RENT

1-800-446-7488 (toll-free in U.S.A. and Canada)
1-970-498-1500 (U.S.A. and international)

WWW.IN-SITU.COM

Level TROLL® 400, 500 & 700 Data Loggers

Spec Sheet

General	Level TROLL 400	Level TROLL 500	Level TROLL 700	Level BaroTROLL
Temperature ranges[1]	Operational: -20-80° C (-4-176° F) Storage: -40-80° C (-40-176° F) Calibrated: -5-50° C (23-122° F)	Operational: -20-80° C (-4-176° F) Storage: -40-80° C (-40-176° F) Calibrated: -5-50° C (23-122° F)	Operational: -20-80° C (-4-176° F) Storage: -40-80° C (-40-176° F) Calibrated: -5-50° C (23-122° F)	Operational: -20-80° C (-4-176° F) Storage: -40-80° C (-40-176° F) Calibrated: -5-50° C (23-122° F)
Diameter	1.83 cm (0.72 in.)	1.83 cm (0.72 in.)	1.83 cm (0.72 in.)	1.83 cm (0.72 in.)
Length	21.6 cm (8.5 in.)	21.6 cm (8.5 in.)	21.6 cm (8.5 in.)	21.6 cm (8.5 in.)
Weight	197 g (0.43 lb)	197 g (0.43 lb)	197 g (0.43 lb)	197 g (0.43 lb)
Materials	Titanium body; Delrin® nose cone	Titanium body; Delrin nose cone	Titanium body; Delrin nose cone	Titanium body; Delrin nose cone
Output options	Modbus/RS485, SDI-12, 4-20 mA	Modbus/RS485, SDI-12, 4-20 mA	Modbus/RS485, SDI-12, 4-20 mA	Modbus/RS485, SDI-12, 4-20 mA
Battery type & life[2]	3.6V lithium; 10 years or 2M readings	3.6V lithium; 10 years or 2M readings	3.6V lithium; 10 years or 2M readings	3.6V lithium; 10 years or 2M readings
External power	8-36 VDC	8-36 VDC	8-36 VDC	8-36 VDC
Memory *Data records*[3] *Data logs*	2.0 MB 130,000 50 logs	2.0 MB 130,000 50 logs	4.0 MB 260,000 50 logs	1.0 MB 65,000 2 logs
Fastest logging rate	2 per second	2 per second	4 per second	1 per minute
Fastest output rate	Modbus: 2 per second SDI-12 & 4-20 mA: 1 per second	Modbus: 2 per second SDI-12 & 4-20 mA: 1 per second	Modbus: 2 per second SDI-12 & 4-20 mA: 1 per second	Modbus: 2 per second SDI-12 & 4-20 mA: 1 per second
Log types	Linear, Fast Linear, and Event	Linear, Fast Linear, and Event	Linear, Fast Linear, Linear Average, Event, Step Linear, True Logarithmic	Linear
Sensor Type/Material	**Piezoresistive; titanium**	**Piezoresistive; titanium**	**Piezoresistive; titanium**	**Piezoresistive; titanium**
Range	Absolute (non-vented) 30 psia: 11 m (35 ft) 100 psia: 60 m (197 ft) 300 psia: 200 m (658 ft) 500 psia: 341 m (1120 ft)	Gauged (vented) 5 psig: 3.5 m (11.5 ft) 15 psig: 11 m (35 ft) 30 psig: 21 m (69 ft) 100 psig: 70 m (231 ft) 300 psig: 210 m (692 ft) 500 psig: 351 m (1153 ft)	Absolute (non-vented) 30 psia: 11 m (35 ft) 100 psia: 60 m (197 ft) 300 psia: 200 m (658 ft) 500 psia: 341 m (1120 ft) 1000 psia: 693 m (2273 ft) Gauged (vented) 5 psig: 3.5 m (11.5 ft) 15 psig: 11 m (35 ft) 30 psig: 21 m (69 ft) 100 psig: 70 m (231 ft) 300 psig: 210 m (692 ft) 500 psig: 351 m (1153 ft)	30 psia (usable up to 16.5 psi; 1.14 bar)
Accuracy[4]	±0.05% full scale (FS) ±0.1% FS	±0.05% FS ±0.1% FS	±0.05% FS ±0.1% FS	±0.05% FS ±0.1% FS
Resolution	±0.005% FS or better	±0.005% FS or better	±0.005% FS or better	±0.005% FS or better
Units of measure	Pressure: psi, kPa, bar, mbar, mmHg, inHg, cmH20, inH20 Level: in., ft, mm, cm, m	Pressure: psi, kPa, bar, mbar, mmHg, inHg, cmH20, inH20 Level: in., ft, mm, cm, m	Pressure: psi, kPa, bar, mbar, mmHg, inHg, cmH20, inH20 Level: in., ft, mm, cm, m	Pressure: psi, kPa, bar, mbar, mmHg, inHg, cmH20, inH20
Temperature Sensor	**Silicon**	**Silicon**	**Silicon**	**Silicon**
Accuracy	±0.1° C	±0.1° C	±0.1° C	±0.1° C
Resolution	0.01° C or better	0.01° C or better	0.01° C or better	0.01° C or better
Units of measure	Celsius or Fahrenheit	Celsius or Fahrenheit	Celsius or Fahrenheit	Celsius or Fahrenheit
Warranty	**3 years**	**3 years**	**3 years**	**3 years**
Notes	[1] Temperature range for non-freezing liquids. [2] Typical battery life when used within the factory-calibrated temperature range. [3] 1 data record = date/time plus 2 parameters logged (no wrapping) from device within the factory-calibrated temperature range. [4] Across factory-calibrated pressure range. [5] Across factory-calibrated pressure and temperature ranges. [6] Up to 5-year (total) extended warranties are available for all sensors—call for details. Delrin is a registered trademark of E.I. du Pont de Nemours and Company. Specifications are subject to change without notice.			

Every Application & Budget

Use maintenance-free, non-vented systems for long-term monitoring and at flood-prone or high-humidity sites. Pair with Tube and Cube Telemtry System and HydroVu for automtatic barometric compensation.

Use high-accuracy, vented systems to conduct aquifer tests and to view barometrically compensated water level data in real time.

Forgot to set a level reference at the beginning of a deployment? Automate level corrections by using Win-Situ Software's post-level correction Wizard.

BaroTROLL® Data Logger

When using a non-vented system, collect barometric pressure and temperature data with a titanium BaroTROLL Data Logger in order to post correct data for barometric pressure fluctuations.

Calculating barometric efficiency? Use the BaroTROLL Logger with vented systems.

CE FC

CALL OR CLICK TO PURCHASE
1-800-446-7488 (toll-free in U.S.A. and Canada)
1-970-498-1500 (U.S.A. and international)
WWW.IN-SITU.COM
221 East Lincoln Avenue, Fort Collins, CO 80524 USA
Copyright © 2013 In-Situ Inc. All rights reserved. Nov. 2015 (T3; 2K)

Tags LT-9010

In-Situ Inc.

Innovations in Water Monitoring

In-Situ® RuggedCable® Systems

Durable, Direct-Read Cable

RuggedCable Systems are custom-built to endure harsh environments and to last for years. RuggedCable Systems include:

- Titanium twist-lock connectors for quick, reliable connections to instrument body, TROLL® Com Communication Device, desiccant, and other accessories (2-year warranty)
- Metal shield beneath the cable jacket to prevent electrical interferences
- Kellems® grip for secure instrument deployment
- Small desiccant for vented systems (only for storage)

Use RuggedCable Systems with:

- Aqua TROLL® 100, 200, and 400 Instruments
- BaroTROLL® Instruments
- Con TROLL® PRO System
- Level TROLL® 300, 500, and 700 Instruments
- RDO® PRO Probe (twist-lock models)
- TROLL® 9500 Water Quality Instruments
- TROLL® Link Telemetry Systems, MultiHop Radios, and TROLL® Net Hub

Customizable Cable

When ordering, consider the following options:

- **Vented or non-vented cable:** Vented cable is used with vented pressure/level sensors for gauged measurements. The cable vent tube ensures that atmospheric pressure is the reference pressure applied to the sensor diaphragm. Non-vented cable may be used with non-vented instruments for absolute measurements. Compensate absolute measurements with barometric pressure data by using a BaroTROLL® Instrument and Win-Situ® Baro Merge™ Software.
- **Jacket options:** Tefzel® (vented) or thermoplastic polyurethane (TPU; vented or non-vented)
- **Customized lengths:** Up to 1,219 m (4,000 ft) 600Ft Cable
- **Cable termination:** Twist-lock termination (female connector) on one or both cable ends. Other custom configurations are available—call for details.
- ~~**Cable reels:** Plastic or steel reel~~

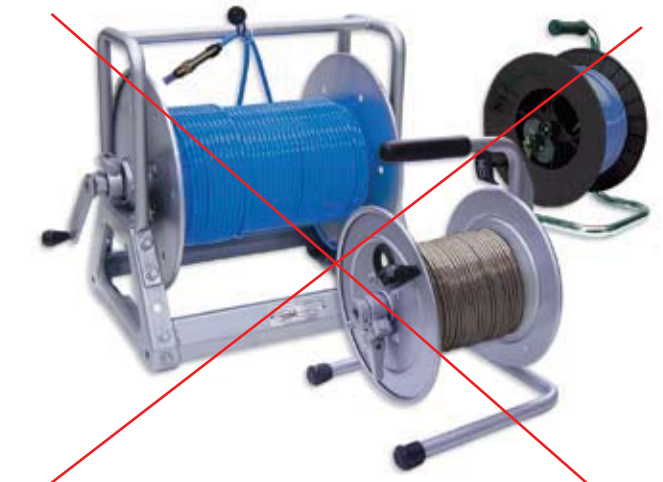

Steel and plastic reels available

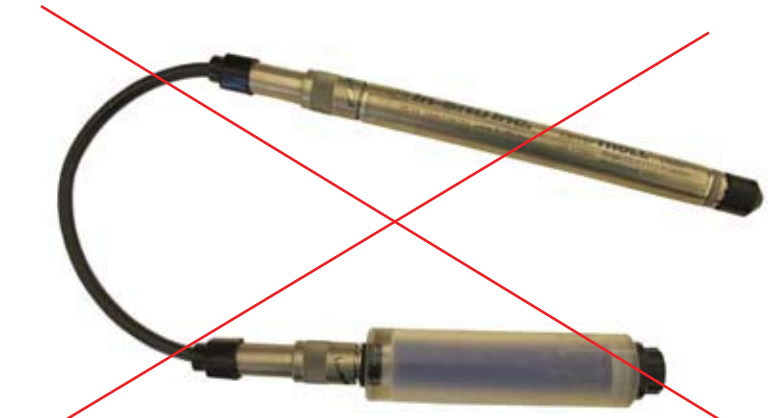

Extra large desiccant connected to RuggedCable System and Level TROLL Instrument

Titanium twist-lock connectors

In-Situ® RuggedCable® Systems

Specifications

Specifications	RuggedCable Systems
Operating temp. range	-25° to 80° C (-13° to 176° F)
Jacket options	• TPU (thermoplastic polyurethane) • Tefzel® (ETFE fluoropolymer; generic equivalent to Teflon®)
Vent options	• Non-vented (absolute) • Vented (gauged) with desiccant (used to mitigate moisture/humidity)
Conductors	6 conductors, 24 AWG, polypropylene insulation
Cable diameter	• TPU: 6.7 mm (0.265 in) • Tefzel: 6.35 mm (0.25 in)
Connector diameter	18. 5 mm (0.73 in)
Weight	• Non-vented, TPU: 16 kg/300 m (35.6 lbs/1,000 ft) • Non-vented, Tefzel: 14 kg/300 m (32 lbs/1,000 ft) • Vented, TPU: 14 kg/300 m (32 lbs/1,000 ft) • Vented, Tefzel: 14 kg/300 m (32 lbs/1,000 ft)
Minimum bend radius	2X cable diameter (13.5 mm; 0.54 in)
Break strength	127 kg (280 lbs)
Maximum cable length	1,219 m (4,000 ft) for RS485
Desiccant pack (required for vented systems)	Large and extra large desiccant packs available with titanium, ABS, or stripped-and-tinned termination.
Warranty	2 years

RuggedCable Selection Guide

Application	Jacket Type	Cable Type
Aquifer characterization	TPU or Tefzel	Vented
Crest stage gaging	TPU	Non-vented
Dewatering	TPU	Vented or non-vented
Flood and storm surge monitoring	TPU	Non-vented
Landfill monitoring	Tefzel	Non-vented
Municipal and industrial monitoring (SCADA)	TPU	Non-vented
Remediation projects	Tefzel	Vented
River, lake, and reservoir monitoring	TPU	Vented or non-vented
Saltwater/brackish water	TPU or Tefzel	Vented or non-vented
Stormwater monitoring	TPU	Vented or non-vented
Tide/harbor monitoring	TPU or Tefzel	Vented
Wetland and estuary monitoring	TPU or Tefzel	Vented or non-vented

Specifications are subject to change without notice.

Accessories

- Large desiccant for low-humidity environments or for deployments where maintenance occurs frequently.
- Extra large desiccant for high-humidity environments or for depolyments where maintenance occurs infrequently. Desiccates six times more saturated air than the large desiccant.
- Titanium cable extenders are used to join two lengths of cable without signal loss. The cable extender seals the cables, provides a weight-bearing connection, and maintains venting.
- Plastic and steel reels

Large desiccant with titanium twist-lock connector for standard deployments

Economical large plastic desiccant

Extra large desiccant with titanium twist-lock connector for high-humidity sites, remote sites, or applications that require fast sampling rates.

Outboard desiccant for use with stripped-and-tinned RuggedCable Systems

Titanium cable extender

Kellems is a registered trademark of Hubbell Incorporated.
Teflon and Tefzel are registered trademarks of E.I. Du Pont de Nemours and Co.

In-Situ Inc.

Call to purchase or rent—www.in-situ.com
221 East Lincoln Avenue, Fort Collins, Colorado, U.S.A. 80524
1-800-446-7488 (toll-free in U.S.A. and Canada)
1-970-498-1500 (U.S.A. and international)
Copyright © 2012 In-Situ Inc. All rights reserved. Sept. 2012 (web)

In-Situ Inc.

Information Sheet

Catalog No. 0053310

SHORT STRIPPED & TINNED CABLE with Male Twist-Lock Connector for Level TROLL®

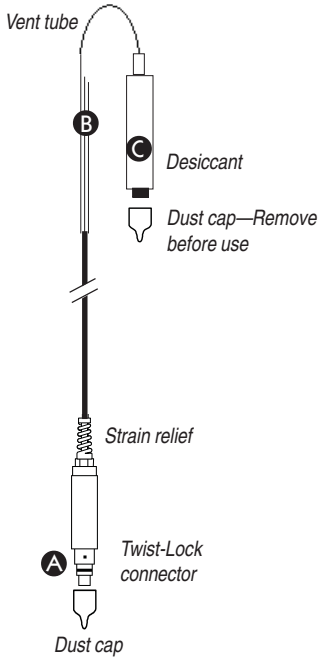

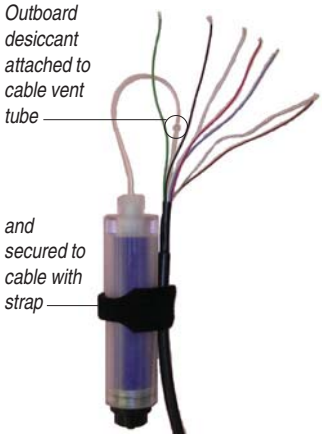

TIP: *The desiccant may be removed from the vent tube, if needed, for better access to the conductor wires. Pull the vent tube extender off the cable vent tube to remove. After connecting and trimming wires, attach desiccant vent tube to cable vent tube and secure desiccant to cable with hook-and-loop strap, as shown here.*

Connects a Level TROLL's RuggedCable™ to a controller or logger for communication via:

- Analog (4-20 mA)
- SDI-12
- RS485 Modbus
- RS232 Modbus (with a customer-supplied converter)

A Male Twist-Lock connector mates with female Twist-Lock connector on the RuggedCable

B Stripped & tinned wires on opposite end for wiring to PLC or logger

C Removable, refillable outboard desiccant protects cable vent tube from condensation in high-humidity environments

SPECIFICATIONS

Materials	PVC, titanium, nylon, Viton®
Dimensions	13.33 cm (5.25 in) long, 19 mm (0.75 in) O.D.
Environmental Rating	IP67 when connected, not designed for submersion
Cable	0.9 m (3 ft) vented TPU (Thermoplastic Polyurethane)
Conductors	6 conductors, 24 AWG, polypropylene insulation
Desiccant pack	Clear acrylic, nylon, HDPE membrane
Desiccant	approx. 22 g silica gel, type 4
Max. recommended cable lengths	SDI-12 61 m (200 ft) Modbus 1259 m (4000 ft) 4-20 mA 1259 m (4000 ft)

CONNECTIONS

Refer to wiring diagrams on back of sheet. Trim back and insulate unused wires. The shield should be wired to a chassis ground or earth ground.

Power Connections. The Red wire provides power for Modbus and SDI-12 modes. The Brown wire provides power for the 4-20 mA mode. If power is present on the Brown wire and not on the Red wire, the device enters the 4-20 mA mode automatically and stays in the 4-20 mode until power is removed from the Brown wire or is applied to the Red wire. The Red wire has priority — if power is applied to both wires at the same time, the device will operate in Modbus or SDI-12 modes but not in 4-20.

Communications. The device automatically switches between Modbus and SDI-12 modes depending on which of the two interfaces has activity. Modbus and SDI-12 cannot be used at the same time — whichever one is currently in use will block communication on the other.

To communicate with the device using Win-Situ® 5 software through a serial COM port: Disconnect the RuggedCable from the short stripped and tinned cable connector. Attach a TROLL Com to the RuggedCable. Connect the TROLL Com's DB9-pin connector to a serial port on a PC running Win-Situ 5.

(over)

SHORT STRIPPED & TINNED CABLE

Level TROLL Connections

ANALOG (4-20 mA) 2 WIRE

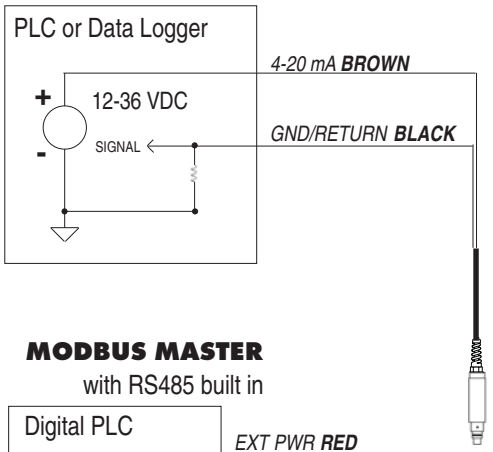

SDI-12 3 WIRE

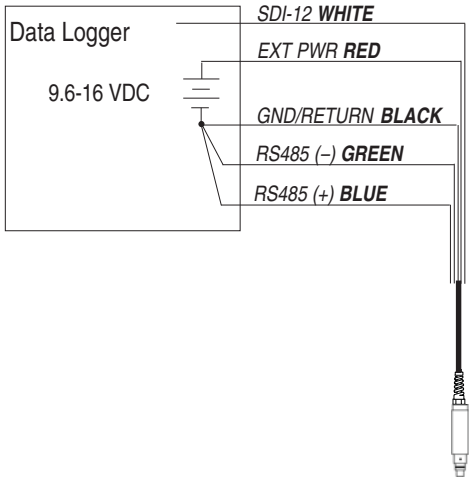

MODBUS MASTER

with RS485 built in

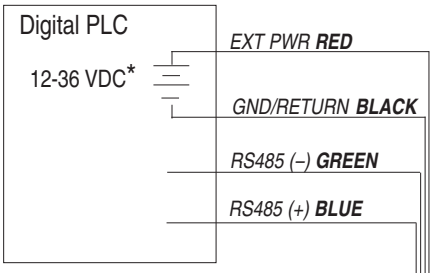

* Optional but highly recommended

MODBUS MASTER

with RS232 built in (converter required)

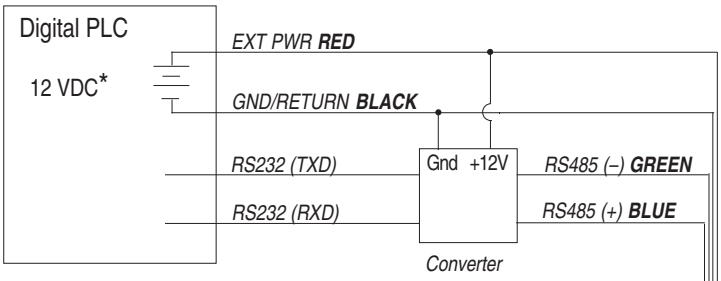

* Voltage limited by converter

Signal	Color
Gnd/Return	BLACK
Ext Power	RED
4-20 mA	BROWN
RS485(–)	GREEN
RS485(+)	BLUE
SDI-12	WHITE

CONVERTER

Port-Powered RS485 converter, such as B&B Electronics Model 485SD9TB

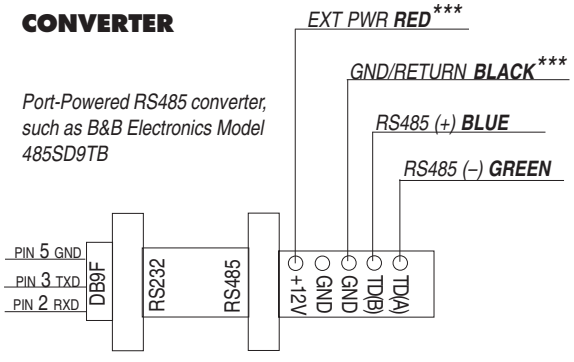

*** Required if port power is not available

1 800 446 7488
(toll-free, US and Canada) or 970 498 1500 **www.in-situ.com**

In-Situ Inc.

Due to continuing product development this information is subject to change without notice. In-Situ and the In-Situ logo, Win-Situ, TROLL, BaroTROLL, RuggedReader, RuggedCable and RDO are trademarks or registered trademarks of In-Situ Inc. Viton is a registered trademark of DuPont Dow Elastomers.
Copyright © 2005-2007 by In-Situ Inc. All rights reserved.

0053312 rev. 004 09/07

Bray COMMERCIAL

BV Series

Threaded Industrial Control Ball Valves

2 Way • 1/2"- 4"

06/30/15

The BV Series Threaded Industrial Ball Valve product line is ideally suited to high temperature and high pressure water or steam as well as a wide range of heavy commercial HVAC control applications. These valves provide exceptional characterized control, high rangeability, flow capacity and pressure drops; all with bi-directional bubble tight shut off.

Valves in this range feature investment cast 3 piece construction, Carbon Steel housings and Stainless Steel balls and stems with NPT threaded connections. Characterized V-Balls and full port versions provide multiple Cv values in each size.

Features and Benefits

- High Cycle Packing Design
  Years of trouble free service
- Bubble Tight Shut-Off with Zero Leakage
  Energy efficient
- 3-Piece Body Design
  Allows in-line servicing
- Phosphate Coated Carbon Steel Bodies
  For cost effective applications up to 1,000 psi at 225˚F
- Available Commercial Grade & NEMA 4 Actuators
  Reliable, cost effective control

Increased Linear Response

Due to the in-line design inherent with characterized control ball valves, line media flows linearly through the piping system. The direct pattern provides increased media control and rapid response times to controller commands.

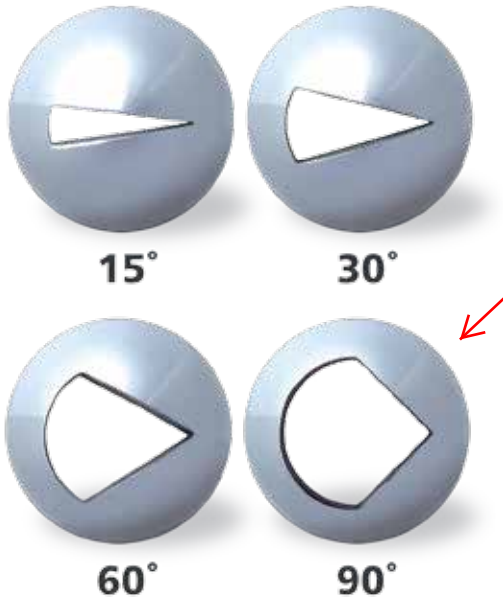

Flow Curve Chart

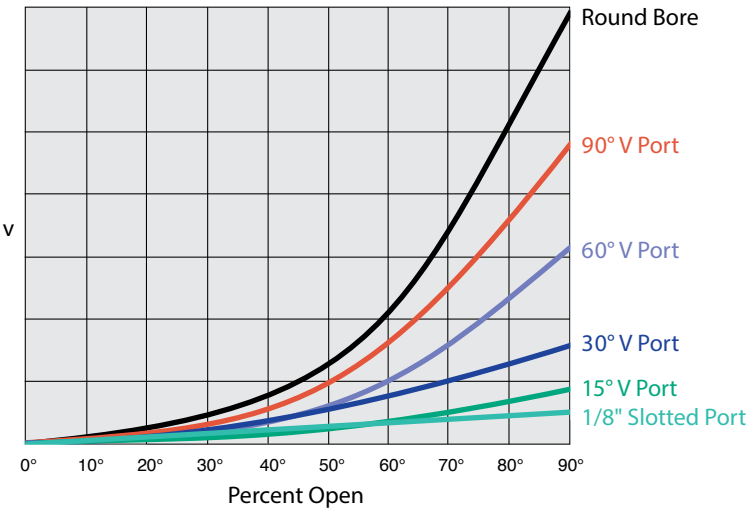

These curves of standard ports are general guidelines and are not specific to any particular valve size.

BV - Specifications

Technical Specifications - BV Threaded Industrial Ball Valve , 1/2" - 4"– 2-Way			
Carbon Steel Body		**V-Port**	**Full-Port**
Service		Chilled/Hot Water, 50/50 Glycol Solutions and Saturated Steam	
Size		1/2" to 4" Threaded Valves, 2-Way	
Maximum Fluid Temperature	Water	-20˚ to 225˚F at 1000 PSI (-28˚ to 107˚C at 6,895 kPa)	
	Steam	150 PSI (1034 kPa)	
Valve Body Pressure Rating		1000 PSI (6895 kPa)	
Maximum Close-Off Pressure		300 PSI (2,068 kPa)* For higher close-offs contact Bray.	
Maximum Recommended Pressure Drop	Water	80 PSI (551 kPa)	
	Steam	50 PSI (344 kPa)	
Flow Characteristic	V15 Port	Linear	NA
	V30 Port	Modified Equal Percentage	NA
	V60 & 90 Port	Equal Percentage	NA
Rangeability		200:1	
Leakage		Bubble Tight per API 598	
End Connections		Threaded NPT	
Ambient Operating Temperature Range		See Actuator Rating (Optional high temperature mounting kit may be required)	
Materials	Body	WCB Carbon Steel	
	Ball & Stem	316 Stainless Steel	
	Seat	Tek-Fil	RPTFE
	Stem Seal/Packing	RPTFE	
	Body Seal	TFM	
	Body Bolts	SS304	

Disclaimer - *The performance specifications are nominal and conform to acceptable industry standards. For application at conditions beyond these specifications, consult the local Bray office. Bray, Inc. shall not be liable for damages resulting from misapplication or misuse of its products.*

BV - Piping Diagram

- "V-Port valves- Note the arrow engraved on the ends which shows the flow going from the bolt head to the nut so that the V-ball is downstream.
- "Full Port valves are bi-directional.

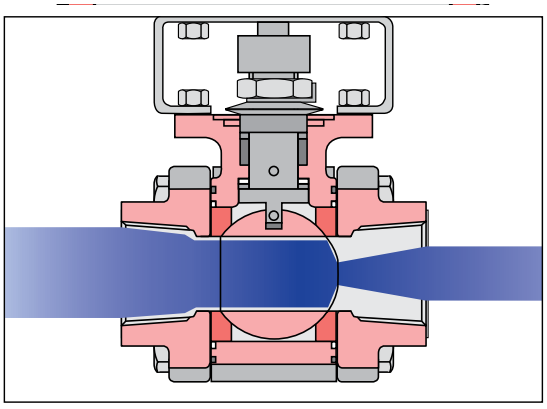

Media Flow entering valve from left. Installing the V downstream is preferred.

BV - Mode of Actuation

Typical Two-Way Ball Valve Application

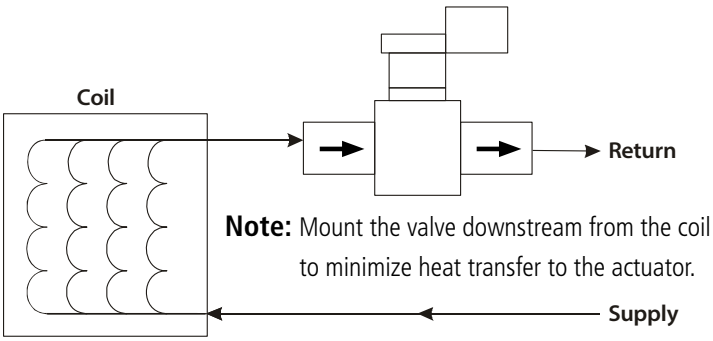

Note: Mount the valve downstream from the coil to minimize heat transfer to the actuator.

BV - For Steam Applications

Install valve with stem at 45˚ to 90˚ from vertical.

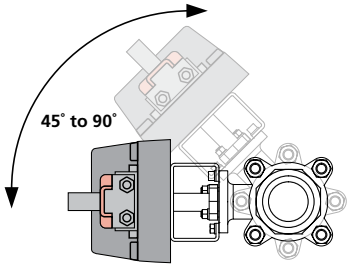

BV - Cut Away View

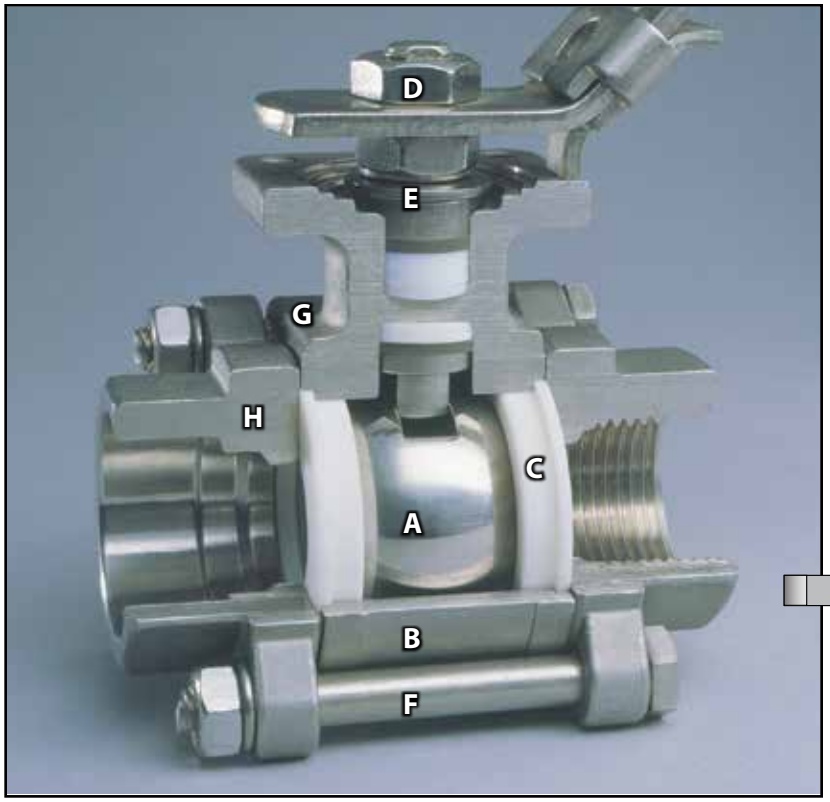

Ball (A) Is a precision machined and mirror finished for bubble-tight shut off with less operating torque. Ball edges have machined curvatures to reduce seat wear and provide a high cycle life.

Body (B) Valve bodies are investment cast and solution annealed/normalized for the highest quality and added strength. Body castings are marked with a foundry heat number for full traceability. Carbon steel bodies are phosphate coated for increased corrosion resistance.

Seat (C) The seat design ensures bi-directional, bubble-tight sealing while providing the lowest possible torque. This seat design reduces friction, minimizes seat wear and reduces operating torque.

Double Lock Nut Design (D) These double lock nuts allow handles to be easily and safely removed while the valve is under full line pressure.

Live-Loaded Stem Seals (E) The live-loaded seals considerably increase the number of cycles between maintenance adjustments.

Body Bolts (F) Standard material is 304 Stainless Steel.

Body Hinges (G) Heavy duty hinges, throughout the entire size range, provide positive alignment of body to end connection during swing-out, in-line servicing.

End Connections (H) Full range of interchangeable connections. Anti-Static Protection BV Series valves feature anti-static grounding devices as standard. These devices ensure electrical continuity between valve ball, stem and body, thus eliminating the possibility of static electrical charges creating sparks within the valve.

Smart Stem

Valve Sizes 1/2" through 2-1/2"

These Interchangeable series of valves feature strong, large diameter stems with live-loaded, self-adjusting sealing utilizing belleville washers which automatically adjust to compensate for changes in temperature and wear. Manual adjustments which can cause damage to the seal and seat are not required. The assembly is secured by a saddle-type lock washer which prevents stem nuts from un-threading in high cycle automation applications.

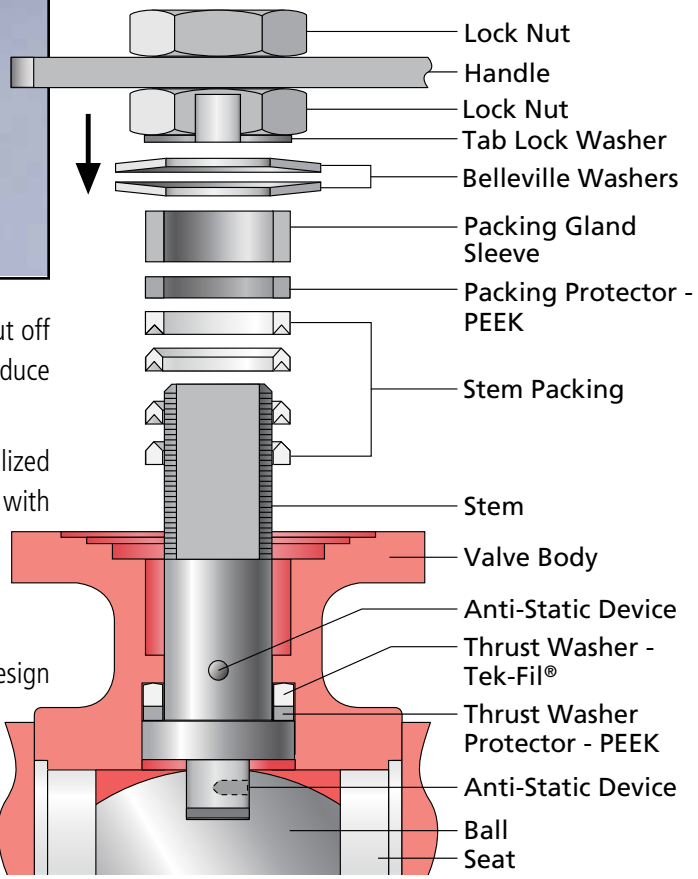

Stem Packing

An adjustable V-ring design creates a multiple seal between the stem and body. Each stem assembly is composed of three or four (dependent on valve size) rings providing a very high cycle life by resisting creep and cold flow. The Thrust Washer and the Thrust Washer Protector combine to provide a primary seal, reduce torque and prevent galling. This arrangement is a BV Series exclusive.

BV -2-Way - Threaded Ball Valve/Industrial Actuator Dimensions

2-Way Setup - Industrial Actuator

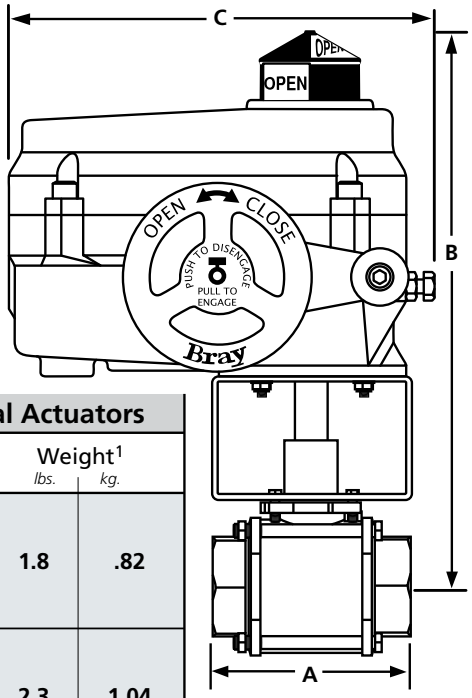

2-Way BV Dimensions, 1/2" - 4" - Threaded BV Series - with Industrial Actuators

Valve Models	Size in.	Size mm	Flow Coefficient Cv	Flow Coefficient Kv	A	B	C	Weight[1] lbs.	Weight[1] kg.
BV05-CS3-04	1/2	15	3.6	3.1	2.8 (71)	9.8 (249)	7.5 (191)	1.8	.82
BV05-CS3-05			4.7	4.0					
BV05-CS3-09			9.4	8.1					
BV05-CS3-12			11.6	10.0					
BV05-CS3-32			32.0*	27.6					
BV75-CS3-05	3/4	20	4.8	4.1	3.4 (86)	9.9 (252)	7.5 (191)	2.3	1.04
BV75-CS3-06			6.1	5.3					
BV75-CS3-12			12.4	10.7					
BV75-CS3-15			15.3	13.2					
BV75-CS3-54			54.0*	46.5					
BV1-CS3-09	1	25	8.5	7.3	3.6 (91)	10.3 (262)	7.5 (191)	3.4	1.5
BV1-CS3-13			12.8	11.1					
BV1-CS3-23			23.2	20.0					
BV1-CS3-31			31.4	27.1					
BV1-CS3-105			105.0*	90.5					
BV125-CS3-11	1.25	32	10.8	9.3	4.3 (109)	10.5 (267)	7.5 (191)	4.9	2.2
BV125-CS3-15			14.9	12.8					
BV125-CS3-33			33.4	28.8					
BV125-CS3-52			51.8	44.6					
BV125-CS3-200			200.0*	172.4					
BV150-CS3-15	1.50	40	14.9	12.8	4.8 (122)	11.2 (285)	7.5 (191)	7.6	3.4
BV150-CS3-20			20.4	17.6					
BV150-CS3-46			45.9	39.5					
BV150-CS3-71			71.2	61.3					
BV150-CS3-275			275.0*	237.1					
BV2-CS3-29	2	50	28.8	24.8	5.6 (142)	11.5 (292)	7.5 (191)	11.4	5.2
BV2-CS3-48			48.1	41.5					
BV2-CS3-104			104.2	89.8					
BV2-CS3-130			129.8	111.8					
BV2-CS3-500			500.0*	431.0					
BV250-CS3-27	2.50	65	27.2	23.5	7.3 (231)	13.4 (340)	10.1 (257)	21.8	9.9
BV250-CS3-56			56.3	48.5					
BV250-CS3-114			113.7	98.0					
BV250-CS3-177			177.3	152.8					
BV250-CS3-780			780.0*	672.4					
BV3-CS3-32	3	80	31.8	27.4	8.0 (257)	15.8 (401)	10.1 (257)	34.6	15.7
BV3-CS3-70			69.8	60.1					
BV3-CS3-150			149.9	129.2					
BV3-CS3-237			237.3	204.6					
BV3-CS3-1150			1,150.0*	991.3					
BV4-CS3-76	4	100	75.5	65.1	9.1 (353)	17.2 (437)	12.1 (307)	54.7	24.8
BV4-CS3-159			158.5	136.7					
BV4-CS3-330			329.5	284.0					
BV4-CS3-547			546.6	471.2					
BV4-CS3-2100			2,100.0*	1,810.2					

[1]- *Weights are for valve bodies only.*
- Largest Actuator dimension shown.
** Full Port Valves*
For steam applications, install valve with stem at 45° to 90° from vertical.

BV - 2-Way Industrial Actuator Selection and Close-Off Chart

2-Way BV Actuator Selection/Close-Off (PSI) - 100 PSI Steam and 300 PSI Water

On/Off & Floating					70-24-0061H	70-24-0201H	70-24-0501H	70-0061H	70-0121H	70-0201H	70-0301H
					On-Off Tri-State 24VAC	On-Off Tri-State 24VAC	On-Off Tri-State 24VAC	On-Off Tri-State 120VAC	On-Off Tri-State 120VAC	On-Off Tri-State 120VAC	On-Off Tri-State 120VAC
Modulating					70-24-0061SVH	70-24-0201SVH	70-24-0501SVH	70-0061SVH	70-0121SVH	70-0201SVH	70-0301SVH
					0-10VDC 4-20mA 24VAC	0-10VDC 4-20mA 24VAC	0-10VDC 4-20mA 24VAC	0-10VDC 4-20mA 120VAC	0-10VDC 4-20mA 120VAC	0-10VDC 4-20mA 120VAC	0-10VDC 4-20mA 120VAC
Valve Models	Size in.	Size mm	Flow Coefficient Cv	Flow Coefficient Kv	**Series 70 - 24VAC**			**Series 70 - 120VAC**			
BV05-CS3-04	1/2	15	3.6	3.1	100 PSI Steam 300 PSI Water			100 PSI Steam 300 PSI Water			
BV05-CS3-05			4.7	4.0							
BV05-CS3-09			9.4	8.1							
BV05-CS3-12			11.6	10.0							
BV05-CS3-32			32.0*	27.6							
BV75-CS3-05	3/4	20	4.8	4.1	100 PSI Steam 300 PSI Water			100 PSI Steam 300 PSI Water			
BV75-CS3-06			6.1	5.3							
BV75-CS3-12			12.4	10.7							
BV75-CS3-15			15.3	13.2							
BV75-CS3-54			54.0*	46.5							
BV1-CS3-09	1	25	8.5	7.3	100 PSI Steam 300 PSI Water			100 PSI Steam 300 PSI Water			
BV1-CS3-13			12.8	11.1							
BV1-CS3-23			23.2	20.0							
BV1-CS3-31			31.4	27.1							
BV1-CS3-105			105.0*	90.5							
BV125-CS3-11	1.25	32	10.8	9.3	100 PSI Steam 300 PSI Water			100 PSI Steam 300 PSI Water			
BV125-CS3-15			14.9	12.8							
BV125-CS3-33			33.4	28.8							
BV125-CS3-52			51.8	44.6							
BV125-CS3-200			200.0*	172.4							
BV150-CS3-15	1.50	40	14.9	12.8	100 PSI Steam 300 PSI Water			100 PSI Steam 300 PSI Water			
BV150-CS3-20			20.4	17.6							
BV150-CS3-46			45.9	39.5							
BV150-CS3-71			71.2	61.3							
BV150-CS3-275			275.0*	237.1							
BV2-CS3-29	2	50	28.8	24.8		100 PSI Steam 300 PSI Water			100 PSI Steam 300 PSI Water		
BV2-CS3-48			48.1	41.5							
BV2-CS3-104			104.2	89.8							
BV2-CS3-130			129.8	111.8							
BV2-CS3-500			500.0*	431.0							
BV250-CS3-27	2.50	65	27.2	23.5		100 PSI Steam 300 PSI Water			100 PSI Steam 300 PSI Water		
BV250-CS3-56			56.3	48.5							
BV250-CS3-114			113.7	98.0							
BV250-CS3-177			177.3	152.8							
BV250-CS3-780			780.0*	672.4							
BV3-CS3-32	3	80	31.8	27.4		100 PSI Steam 300 PSI Water			100 PSI Steam 300 PSI Water		
BV3-CS3-70			69.8	60.1							
BV3-CS3-150			149.9	129.2							
BV3-CS3-237			237.3	204.6							
BV3-CS3-1150			1,150.0*	991.3							
BV4-CS3-76	4	100	75.5	65.1			100 PSI Steam 300 PSI Water				100 PSI Steam 300 PSI Water
BV4-CS3-159			158.5	136.7							
BV4-CS3-330			329.5	284.0							
BV4-CS3-547			546.6	471.2							
BV4-CS3-2100			2,100.0*	1,810.2							

V-port ball valves are controllable between 20% and 80% of full open.
** Full Port Valves*
For steam applications, install valve with stem at 45˚ to 90˚ from vertical.

Key BV1-CS3-10 =
- BV = Industrial Ball Valve Series
- 1 = Size (in.)
- CS3 = Material, CS3 = Carbon Steel
- 10 = Cv

Series 70
Industrial Electric Actuators

The Bray Series 70 Electric Actuator provides a rugged, compact industrial actuator solution to a wide range of quarter turn applications including butterfly valves, ball valves, and dampers. Available in torque outputs from 600 to 18,000 lb. in. (68 to 2033 Nm), these actuators mount directly to Bray and other industry standard butterfly valves without the need for brackets and linkages. The manual declutchable override handwheel is standard on all Bray Series 70 actuators, providing end user convenience in installation, commissioning and service.

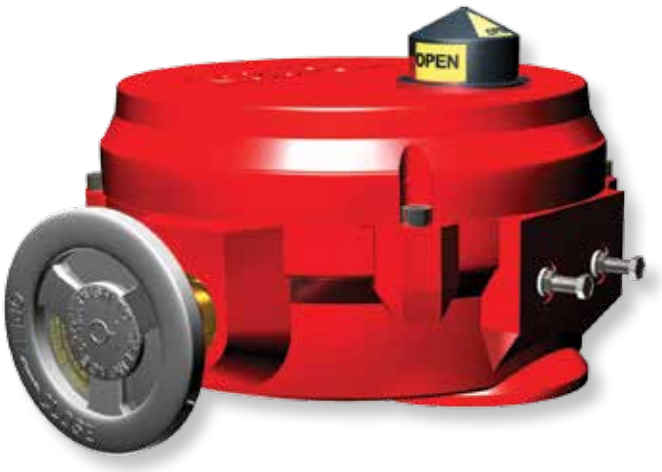

On/Off and modulating models are available in 24, 110 and 220 VAC. The standard enclosure is NEMA 4x and IP65 rated with an industrial polyester finish, making the Series 70 the ideal choice for cooling tower valves and other outdoor applications. The advanced Servo Pro modulating control card assures compatibility with virtually any analog control signal used in today's building automation and temperature control systems.

FEATURES	BENEFITS
Compact design and direct mounting	Fits in tight spaces, installs easily
UL, CSA and CE approved (most models)	Assures universal application acceptability
High visibility beacon position indicator	Assists in field operation
Internal isolation relays	Allows parallel wiring of multiple actuators from a single control output
Manual declutchable override handwheel	Allows manual positioning without disconnecting power
Advanced Servo Pro modulating option	Provides on-board diagnostics and user adjustable options including control signal type, speed controls and other features.
Optional battery backup on 24 VAC models	Assures return to a predetermined position upon loss of power supply

MODEL SELECTION

Model Number	Torque Output in/lbs.	24 VAC	120 VAC	On/Off	Modulating	Heater	Aux. Switches
70-24-0061	600	•		•			•
70-24-0061H	600	•		•		•	•
70-24-0061SV	600	•			•		•
70-24-0061SVH	600	•			•	•	•
70-0061	600		•	•			•
70-0061H	600		•	•		•	•
70-0061SV	600		•		•		•
70-0061SVH	600		•		•	•	•
70-0121	1200		•	•			•
70-0121H	1200		•	•		•	•
70-0121SV	1200		•		•		•
70-0121SVH	1200		•		•	•	•
70-24-0201	2000	•		•			•
70-24-0201H	2000	•		•		•	•
70-24-0201SV	2000	•			•		•
70-24-0201SVH	2000	•			•	•	•
70-0201	2000		•	•			•
70-0201H	2000		•	•		•	•
70-0201SV	2000		•		•		•
70-0201SVH	2000		•		•	•	•

Model Number	Torque Output in/lbs.	24 VAC	120 VAC	On/Off	Modulating	Heater	Aux. Switches
70-0301	3000		•	•			•
70-0301H	3000		•	•		•	•
70-0301SV	3000		•		•		•
70-0301SVH	3000		•		•	•	•
70-24-0501	5000	•		•			•
70-24-0501H	5000	•		•		•	•
70-24-0501SV	5000	•			•		•
70-24-0501SVH	5000	•			•	•	•
70-0501	5000		•	•			•
70-0501H	5000		•	•		•	•
70-0501SV	5000		•		•		•
70-0501SVH	5000		•		•	•	•
70-0651	6500		•	•			•
70-0651H	6500		•	•		•	•
70-0651SV	6500		•		•		•
70-0651SVH	6500		•		•	•	•
70-1300	13,000		•	•			•
70-1300H	13,000		•	•		•	•
70-1300SV	13,000		•		•		•
70-1300SVH	13,000		•		•	•	•
70-1800	18,000		•	•			•
70-1800H	18,000		•	•		•	•
70-1800SV	18,000		•		•		•
70-1800SVH	18,000		•		•	•	•

Application Note:
Use Series 70 actuators only to control equipment under normal operating conditions. Where failure or malfunction of the electric actuator could lead to personal injury or property damage to the controlled equipment or other property, additional precautions must be designed into the control system. Incorporate and maintain other devices, such as supervisory or alarm systems or safety or limit controls, intended to warn of or protect against failure or malfunction of the electric actuator.

SPECIFICATIONS

Industrial electric actuators shall include manual declutchable override handwheel and high visibility position indication. Motors shall be continuous duty. Enclosure shall be NEMA 4X, IP 65 rated. Actuator shall conform to ISO 5211 standards for direct mounting onto quarter turn valves. On/Off actuators shall be equipped with internal isolation relays to allow parallel wiring of multiple units. Modulating actuators shall be equipped with a microprocessor-based servo control with on-board diagnostics. Actuator shall be UL, CSA and CE approved. Actuators shall be Bray Series 70 or approved equal.

Model	Voltage	Torque (lb. in.)	Stroke Time	Current Draw (Amps) Full Load	Current Draw (Amps) Locked Rotor
70-24-0061	24 VAC	600	45 sec.	1.8	-
70-24-0201	24 VAC	2000	60 sec.	2.0	-
70-24-0501	24 VAC	5000	60 sec.	3.0	-
70-0061	120 VAC	600	30 sec.	1	1.4
70-0121	120 VAC	1200	30 sec.	0.78	2.1
70-0201	120 VAC	2000	30 sec.	1	2.1
70-0301	120 VAC	3000	30 sec.	1.2	3.0
70-0501	120 VAC	5000	30 sec.	1.6	3.0
70-0651	120 VAC	6500	30 sec.	2.3	3.1
70-1300	120 VAC	13000	110 sec.	2.3	3.1
70-1800	120 VAC	18000	110 sec.	2.5	3.1

Motor Duty Cycle		Continuous Duty
Aux Switches (Two SPDT)		10A (1/3 HP) @ 120 VAC 10A (1/2 HP) @ 220 VAC
Heater (Optional)	24V Models 120 V Models	5 Watt, PTC style, self regulating 5 Watt, PTC style, self regulating
Servo (Modulating Models)	Control Input Input Impedance	0 to 10 VDC, 2 to 10 VDC, 0 to 5 VDC, 4 to 20 mA Voltage: 1000K Ohms; Current: 250 Ohms
Housing		Die Cast Aluminum, Polyester Finish NEMA 4X, IP 65
Conduit Entries (2)		70-0061, 1/2" NPT All Other Models, 3/4" NPT
Terminal Strip		On/off Models, 12 to 22 AWG Modulating Models, 14 to 24 AWG
Ambient Temperature		-20 to 150F (-29 to 65C)
Agency Listings (120V)		UL, CE, CSA

The performance specifications are nominal and conform to acceptable industry standards. For application at conditions beyond these specifications, consult the nearest Bray office. Bray controls shall not be liable for damages resulting from misapplication or misuse of its products.

WIRING

Note: Use this Series 70 Electric Actuator only to control equipment under normal operating conditions. Where failure or malfunction of the electric actuator could lead to personal injury or property damage to the controlled equipment or other property, additional precautions must be designed into the control system. Incorporate and maintain other devices such as supervisory or alarm systems or safety or limit controls intended to warn of, or protect against, failure or malfunction of the electric actuator.

Note: Do not install or use the Series 70 Electric Actuator in or near environments where corrosive substances or vapors could be present. Exposure of the electric actuator to corrosive environments may damage the internal components of the device, and will void the warranty.

120 VAC ON/OFF WIRING

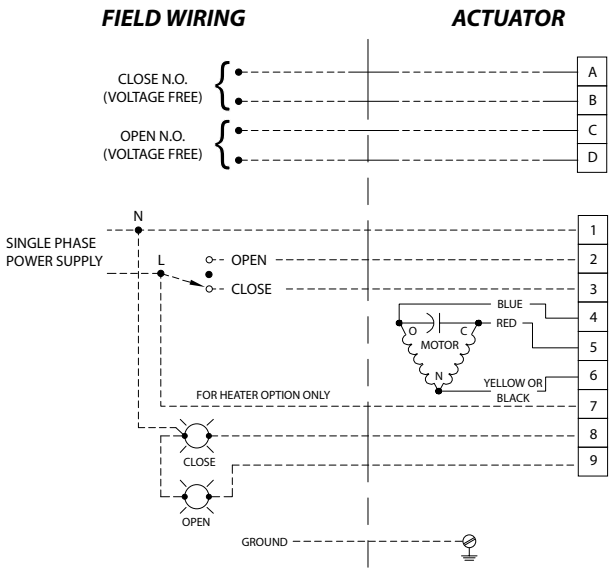

24 VAC ON/OFF WIRING

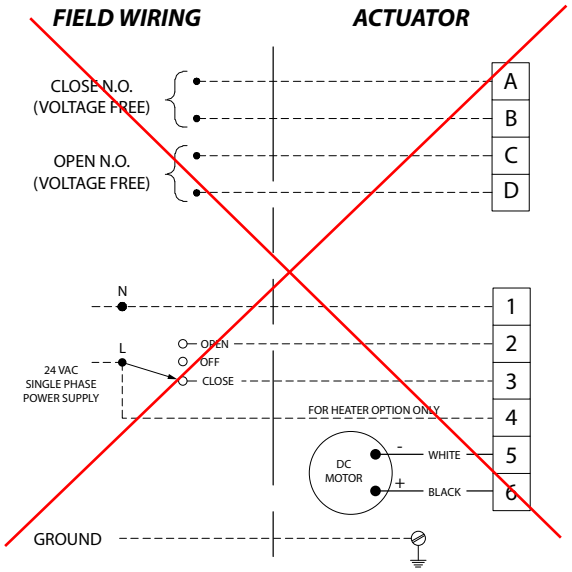

Notes:

1. Command signal and feedback wires ***MUST*** be shielded and grounded for proper servo operation.

2. The command signal input (-) terminal is internally connected to the servo neutral terminal. ***DO NOT*** connect the live to the neutral terminal on the servo.

3. Command signal and feedback signal must be isolated from each other and any other circuits. When usig 0-10VDC, 0-5VDC & 2-10VDC, The common of the command signal should NOT be ground/earth referenced.

4. Feedback loop is powered by the servo, do not supply external power.

5. Command signal & feedback signal wires should be shielded properly & shield should be grounded/earthed on one end only, preferably the controller end.

The 24 V Servo Pros (Revision J) can be wired 3 or 4 wire configured

120 VAC MODULATING WIRING

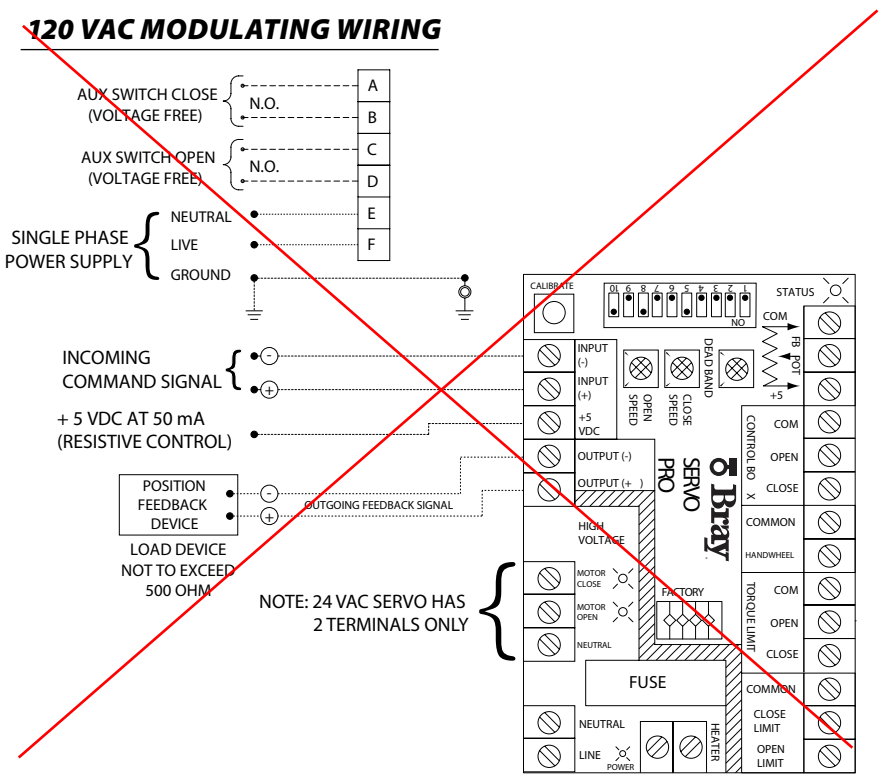

DIMENSIONS

SERIES 70 ACTUATOR DIMENSIONS

ACTUATOR MODEL NUMBER	Please reference illustration below																	
	A	B	C	D	E	F	G	H	J	K (UNC) x B.C.	M (UNC) x B.C.	N	P	Q	øR	S	T	U	Wt. lbs [kgs]
S70-0061	7.5 [191]	5.6 [142]	3.0 [76]	5.1 [130]	1.9 [48]	1.94 [49.3]	.19 [4.8]	1/2 ‡	2.0 [51]	5/16-18 x ø2.76 F07	—	.75 [19]	.51 [13]	1.75 [44]	3.5 [89]	–	–	–	12 [6]
S70-0121 S70-0201	10.1 [257]	7.8 [198]	3.7 [94]	6.5 [165]	2.5 [64]	2.69 [68.3]	.56 [14.2]	3/4 ‡	2.6 [66]	5/16-18 x ø2.76 F07	1/2-13 x ø4.92 F12	1.18 [30]	.87 [22]	2.20 [56]	8 [203]	–	–	–	28 [13]
S70-0301 S70-0501 S70-0651	12.1 [307]	9.5 [241]	5.6 [142]	7.2 [183]	2.9 [74]	3.19 [81]	.56 [14.2]	3/4 ‡	3.1 [79]	1/2-13 x ø4.92 F12	3/4-10 x ø6.50 F16	See Detail A1			12 [305]	–	–	–	48 [22]
S70-1300 S70-1800	12.1 [307]	9.5 [241]	6.0 [152]	12.5 [317]	8.1 [206]	9.2 [234]	.56 [14.2]	3/4 ‡	8.3 [211]	1/2-13 x ø4.92 F12	3/4-10 x ø6.50 F16	See Detail A2			12 [305]	6.1 [155]	12.7 [323]	8 [203]	118 [54]

Dimensions are in Inches [Millimeters in brackets]

70-0061 to 70-0651

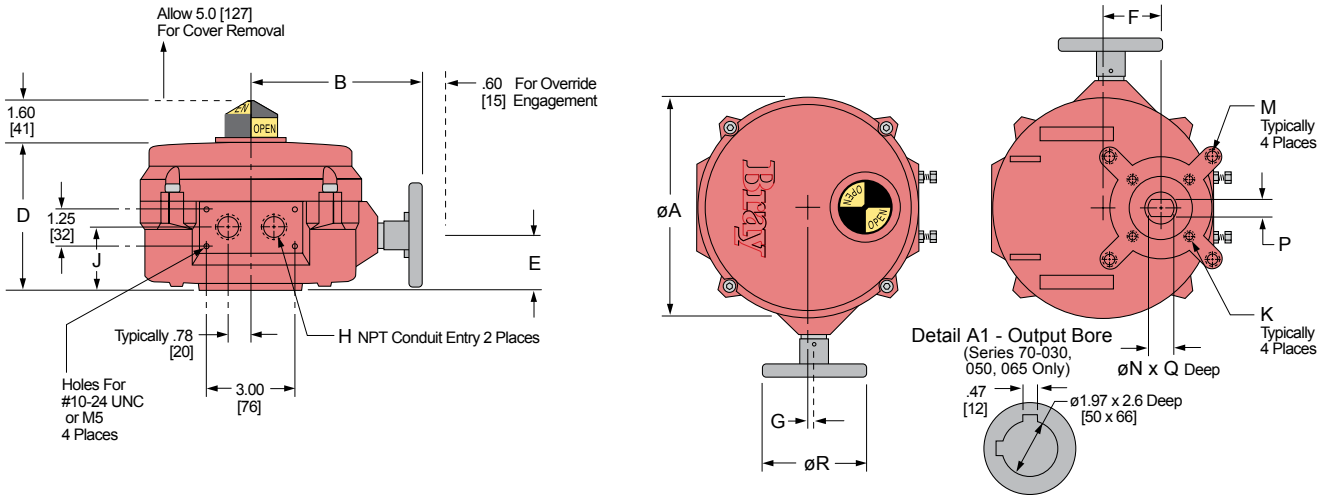

70-1300 to 70-1800

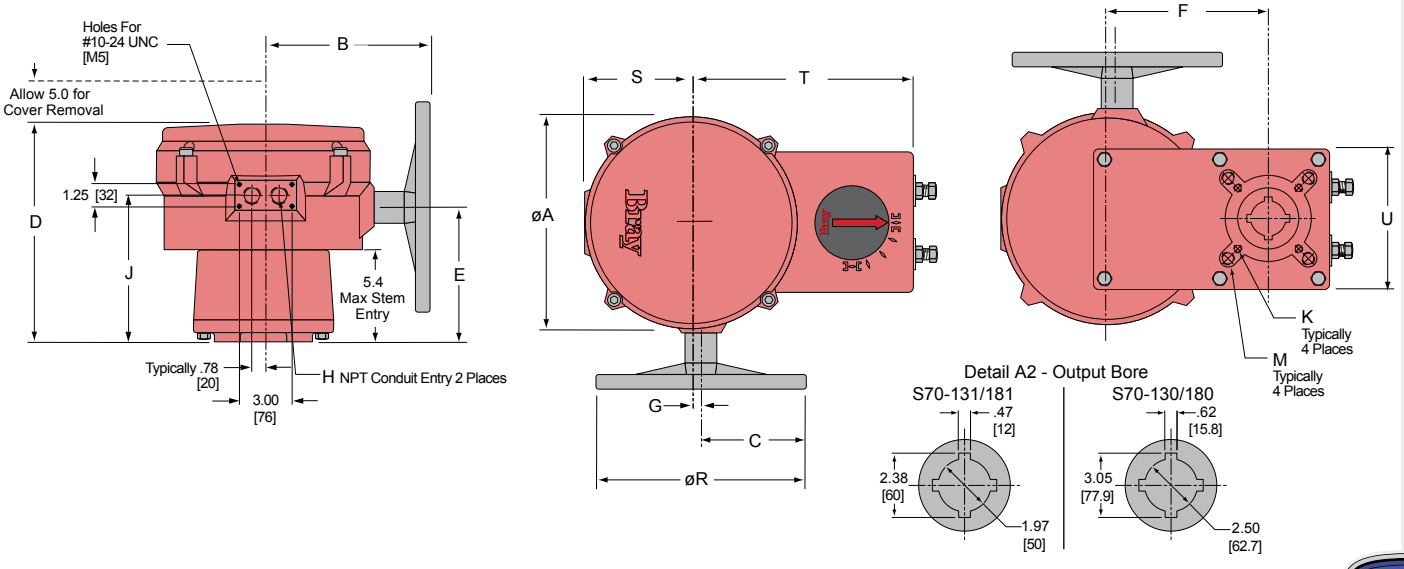

TAG: LSH-5050
LSH-5051
LSH-5060
Vault Leak/Dual Contain

Warrick

Series 16DM

Series 16DM DPDT Load Contact, Solid State Plug-In Module

Part No. 16DMB1B0
Unit Price $267
Lead Time (Days) 5

Image is of actual product

Model	16DM
Mode of Operation	Direct
Sensitivity	10 K
Control Style	Plug-In Module
Socket Style	DIN Mount
Standoff Style	N/A
Enclosure	None
Contact Design	2 Normally Open & 2 Normally Closed (non-powered)
Contact Rating	5 Amp Resistive 1/10 horse power
Secondary Voltage	12 VAC
Terminal Style	Screw Connector
Number of Channels	1
Minimum Temperature (°F)	-40
Maximum Temperature (°F)	150
Protection	Non-Intrinsically Safe
Approvals	UL 508 General Purpose
Minimum Qty (per Release)	1
Weight (Lbs)	1.1

Options

Form 164
Sheet P/N 100226-1
Rev. D

Warrick® Series 16DM Controls

Installation and Operation Bulletin

This bulletin should be used by experienced personnel as a guide to the installation of series 16DM controls. Selection or installation of equipment should always be accompanied by competent technical assistance. We encourage you to contact Gems Sensors Inc. or its representative if further information is required.

	Specifications
Control Design:	Solid-State components enclosed in clear Lexan plug-in style housing. Housing carries no NEMA rating
Contact Design:	2 SPDT (2 form C): Two Normally Open (N.O.) and two Normally Closed (N.C.), non-powered contacts
Contact Ratings:	5 A @ 120, 240 VAC resistive, 1/8 H.P. @ 120 or 240 VAC
Contact Life:	Mechanical: 5 million operations - Electrical: 100,000 operations minimum at rated load
Supply Voltage	24, 120, or 240 VAC Models - Factory Set. Plus 10%, minus 15%, 50/60 Hz
Supply Current:	120, 240, 24 VAC, Relay energized 4.4 VA
Secondary	12 VAC RMS Voltage on probes. 1.5 milli-amp Current
Circuit: **Sensitivity:**	Models operate from 0 to 1,000,000 OHM maximum specific resistance - Factory set
	-40° To 150°F Ambient
Temperature:	All connections #6-32 screw type with pressure clamps
Terminals:	Standard, 0.5 seconds on rising level.
Time Delays:	Additional time delays on rising and/or falling level available as option.
Listings:	U.L. Listing, Industrial Motor Control (508). 240 and 208 volt units are not U.L. limit control recognized.

Installation

1. Install octal socket in appropriate enclosure using two #6 or #8 metal screws.
   a) Install rail mount socket on appropriate rail (DIN mount) in appropriate enclosure, if applicable.
2. Wire control per wiring diagram, following N.E.C. and local codes.
3. Install control module in socket.

Sensitivities vs Maximum Probe Wire Distance*

Sensitivity Character	Sensitivity (K Ohms)	Distance (Ft.)
A or K	4.7	10,000
B or L	10	5,700
C or M	26	2,200
D or N	50	1,075
E or P	100	570
F or R	470	270
G or S	1,000	38

* Based on type MTW or THHN wire, #14 or #16 Awg

Dimensions

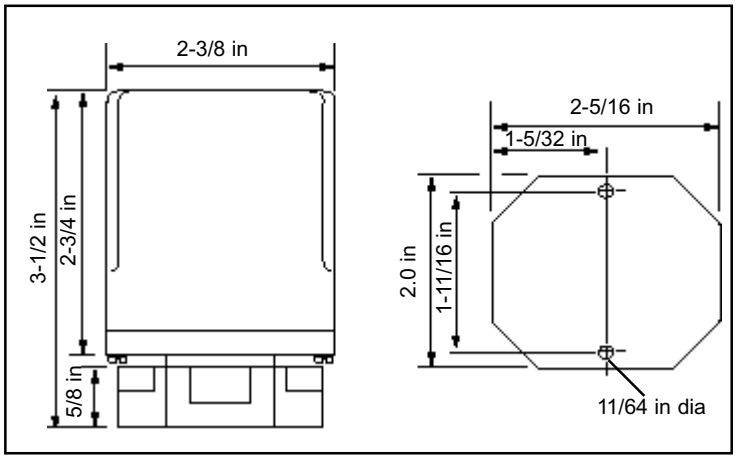

Use copper (60/70° C) wire only. Torque to 20 inch pounds.

Wiring Diagram

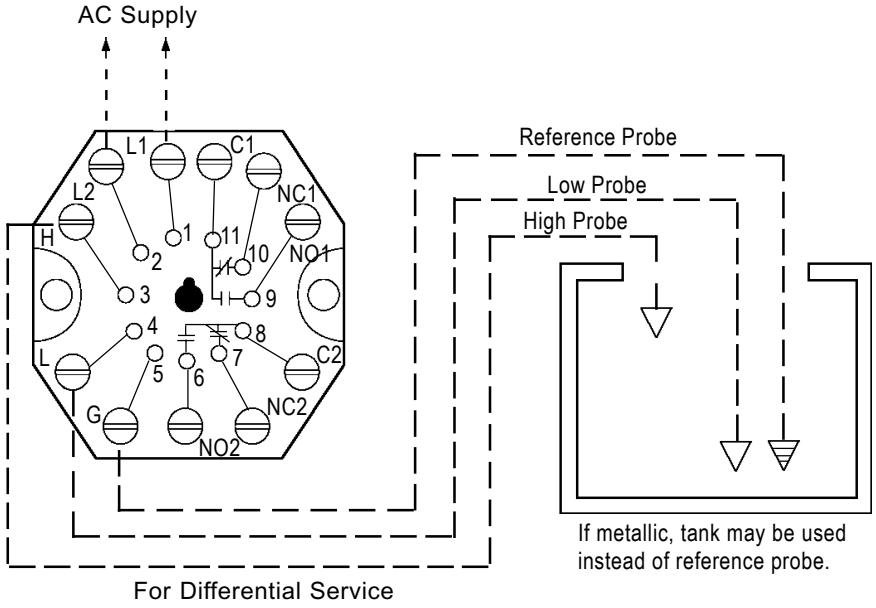

Note: For Single Level Service, use "H" and "G" Connections

Operation

Direct Mode - Single Level Service:
When the liquid rises to the electrode on terminal 3, the control energizes, changing state of the load contacts. **(LED will be lit)** The control remains energized until the liquid level recedes below electrode on terminal 3. The control then de-energizes, **(LED will not be lit)** returning load to original state.

Inverse Mode - Single Level Service:
Control energizes with power, changing state of the load contacts. **(LED will be lit)** When the liquid rises to the electrode on terminal 3, the control de-energizes, returning the load contacts to shelf state. **(LED will not be lit)** The control remains de-energized until liquid level recedes below the electrode connected to terminal 3. The control then energizes.

Direct Mode - Differential Service:
When the liquid rises to the electrode on terminal 3, the control energizes, changing state of the load contacts. **(LED will be lit)** The control remains energized until the liquid level recedes below electrode on terminal 4. The control then de-energizes, **(LED will not be lit)** returning the load contacts to original state.

Inverse Mode - Differential Service:
Control energizes with power, **(LED will be lit)** changing state of the load contacts. When the liquid rises to the electrode on terminal 3, the control de-energizes, returning load contacts to shelf state. **(LED will not be lit)** The control remains de-energized until the liquid level recedes below the electrode on terminal 4. The control then energizes.

Optional

Time Delays: With time delay on increasing level, the liquid must be in contact with the short electrode for the full duration of the time delay before control will operate. With delay on decreasing level, the liquid must be below long electrode for the full duration of the time delay before control will operate. In single level service, terminals 3 and 4 must be jumpered together to achieve time delays on both increasing and decreasing levels or just decreasing level.

16DM F 1 A 1 -*-*

- **Time Delay:** (decreasing level) 1-20 sec.
- **Time Delay:** (increasing level) 1-20 sec.
- **Enclosure:** 0-none, 1-NEMA 1, 4-NEMA 4, 7-NEMA 7, 12-NEMA 12
- **Socket Style:** A - 11 Pin Octal, B - 11 Pin DIN Mount, M - None, Module Only
- **Supply Voltage:** 1- 120 VAC, 2- 240 VAC, 3- 24 VAC, 8- 208/240 VAC*
- **Mode/Sensitivity:**
  - **Direct** A- 4.7K, B- 10K, C- 26K, D- 50K, E- 100K, F- 470K, G- 1M
  - **Inverse** K- 4.7K, L- 10K, M- 26K, N- 50K, P- 100K, R- 470K, S- 1M

*187 Vmin to 255 Vmax VAC

Gems Sensors Inc.
One Cowles Road
Plainville, CT 06062-1198
Tel: 860-793-4579
Fax: 860-793-4580

TAG: LSH-5050
LSH-5051
Vault Leak

3E	3N	3B
1" to 3" NPT	#10 Machine Screws from Underside	3/8" - 18NPT, 5/8" - 18UNF, 5/8" - 24UNEF
1 thru 7	1 thru 3	1
Series 3E fittings are cast metal, pressure-tight assemblies capable of handling 1-7 probes. Attachment to vessels is accomplished with external pipe threading. 3E Fittings require the use of 3R rigid or 3W wire suspended electrodes.	Series 3N fittings accommodate 1-3 probes operating at atmospheric pressure. The assembly mounts on a flat surface atop open tanks or closed vessels. 3N Fittings require the use of 3R rigid or 3W wire suspended electrodes.	Series 3B fittings are compact pressure tight assemblies that hold a single electrode probe for use in water and chemicals. These fittings incorporate a 1/4-20 female thread that must be combined with a Series 3R (rigid rod electrode) or Series 3W/3Y (wire suspended electrode) to make a complete assembly.
Die-cast aluminum, epoxy coated	Die-cast aluminum, epoxy coated	—
Cast iron, red brass, 316 stainless steel	PVC, red brass, 316 stainless steel	316 stainless steel
Teflon®	Teflon®	Teflon®
125 psig @ 353°F (cast iron) 250 psig @ 406°F (brass, 316 S.S.)	0 psig @ 150°F (PVC) 0 psig @ 500°F (brass, 316 S.S.)	250 psig @ 406°F 500 psig @ 75°F
U.L. File #MP2489, Vol. 1 Sec. 1; CSA	CSA File #LR11644	U.L. File #MP2489, Vol. 1 Sec. 1; CSA

	No. of Probes	Attachment to Vessel	Conduit Boss Thread Size	Terminal Housing Size (W" x D" x H")
3E	1	1" NPT	1/2" NPT	2-1/4 x 2-1/4 x 2-1/4
	2-3	2" NPT	1/2" NPT	3-1/4 x 3-1/4 x 2-3/8
	4	2-1/2" NPT	1/2" NPT	3-1/4 x 3-1/4 x 2-3/8
	5-7	3" NPT	3/4" NPT	4 x 4 x 2-1/2
3N	1-3	2-1/4" square flat pad, 1-1/2" dia. hole in top of vessel secured with #10 machine screws at the corners of a 1-1/2" square	1/2" NPT	2-1/4 x 2-1/4 x 2-1/4

3E 2 A

Series
3E

Number of Probes
1 thru **7**

Body Material
A – Cast Iron
B – Red Brass
C – 316 Stainless Steel

3N X X

Series
3N

Number of Probes
1 thru **3**

Body Material
A – PVC
B – Red Brass
C – 316 Stainless Steel

3B X B

Series
3B

Thread
1 – 3/8" - 18 NPT
2 – 5/8" - 18 UNF
3 – 5/8" - 24 UNEF

Metal Parts
B – 316 Stainless Steel

3R, 3W[1]	3R, 3W[1]	3R solid rod (up to 4') 3W[1] or 3Y[2] (greater than 4')

Custom options available. Consult factory.

TAG: LSH-5050
LSH-5051
Vault Leak

Series 3R/3T
General Purpose Probes

- Metallic Rods
- Available in Many Materials for Various Requirements
- Adaptable for Various Fittings

For general purpose use, Series 3R probes are metallic rods with threaded ends that screw into a fitting that extends vertically down into the liquid. Available in a variety of materials for different applications. 3T tapered rods are also available.

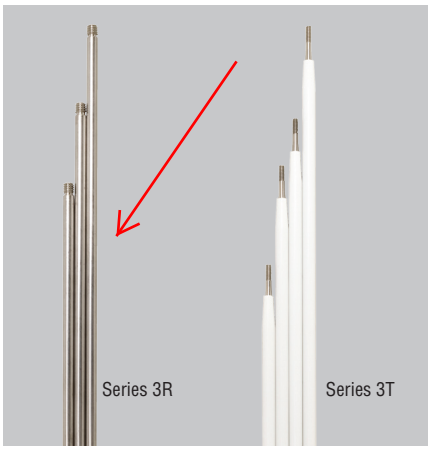

Specifications

Style	
Series 3R	1/4˝ (.64 cm) threaded rod
Series 3T	1/4˝ (.64 cm) tapered rod
Material	Brass, Hastelloy C, Monel, 316 stainless steel, titanium, Carp. 20
Sheathing (optional)	PVC heat shrink 200°F (93°C), Teflon® heat shrink 350°F (177°C)

Applications

3R: For use with Series 3E, 3F, 3G, 3B fittings

3T: For use with Series 3G and other custom configurations

How to Order

Use the **Bold** characters from the chart below to construct a product code.

3R **2** **C** **4**

Series
3R **3T**

Length (Feet)
1 – One
2 – Two
3 – Three
4 – Four
5 – Five
6 – Six
7 – Seven
8 – Eight
9 – Nine
10 – Ten

Probe Material
A – Brass
C – 316 Stainless Steel
D – Carp. 20
E – Hastelloy B
F – Hastelloy C
G – Monel
H – Titanium

Sheathing Heat Shrink
0 – None
4 – PVC
5 – Teflon®

Contact your representative for custom lengths.

Note: Long lengths can be coupled to facilitate shipping and installation. Consult factory.

Dimensions

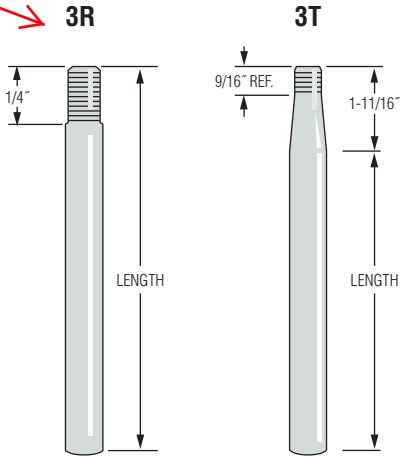

TAG: LSH-5060
Dual Containment

Series 3W – Wire Suspended Probes

- Metallic Bars
- Plastic Shield Protected
- Adaptable to Many Fittings
- Field Assembled

Series 3W probes, consisting of metallic bars within a protective plastic shield, are designed to be suspended in liquid with PVC-insulated wires. They are ideal for applications where rigid electrode rods are impractical or cumbersome, such as:

- Deep Wells
- Pump Control
- Waste Water
- Deep Tanks

7/8″ (2.22 cm) diameter x 3-3/4″ (9.52 cm) length. 3Z1A wire and 3Z1B adaptor kit required for use with 3E, 3F and 3N fittings.

Series 3W

How to Order

Select a 3W electrode, a 3Z1B adaptor and a length of 3Z1A suspension wire to form a complete suspended probe.

1. 3W Electrodes

Probe Material	Part Number
Brass	3W1
316 Stainless Steel	3W2

2. 3Z1B Adaptor Kit
For use with 3E, 3F and 3N fittings.
Part Number: 3Z1B

3. 3Z1A Suspension Wire
Order in standard or custom length.

Length (Feet)	Part Number
500	100325-500
1000	100325-1000
5000	100325-5000
Custom	3Z1A-20

Specify in one foot increments up to 5000 ft.

Components Detail

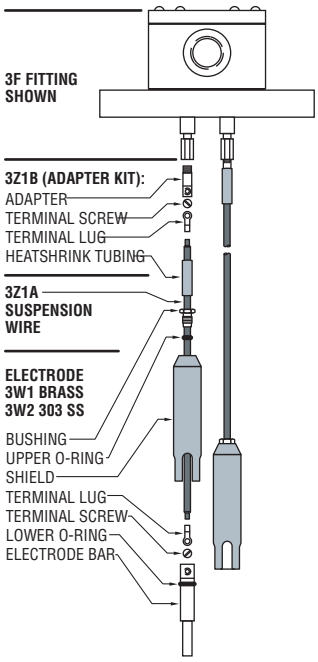

Series 3Y – Corrosion Resistant Probes

- Metallic Bars
- Corrosion Resistant
- Available in Many Materials for Various Requirements
- Adaptable for Various Fittings

Series 3Y wire suspended probes consist of metallic bars within a protective plastic shield, designed to be suspended in liquid. Series 3Y suspension wires are PVC or Teflon® insulated for use in corrosive liquid applications. 7/8″ (2.22 cm) diameter x 3-1/2″ (8.90 cm) length.

Series 3Y

Specifications

Style	Wire suspended
Tip Material	Carp. 20, Hastelloy C, 316 stainless steel
Shield Material	PVC 150°F (66°C), Teflon®

How to Order

Use the **Bold** characters from the chart below to construct a product code.

3Y X X X

Series
3Y

Shield Material
1 – PVC
3 – Teflon®

Probe Tip Material
C – 316 Stainless Steel
D – Carp. 20
F – Hastelloy C

Length of Wire
1 – 10 feet
2 – 20 feet
3 – 30 feet
etc.

Note: 3Z1B Connector is used to connect suspension wire with 3B, 3E, 3F, 3G or 3N fitting.

Applications

- General Purpose
- Wire Suspended Probes
- Corrosive Liquids, Chemicals

this sheet required for remote mount transmitters

TAG: FIT-5001

Overview

Transmitter MAG 5000/6000 compact version (left) and 19“ insert version (right)

The MAG 5000 and 6000 are transmitters engineered for high performance, easy installation, commissioning and maintenance. The transmitters evaluate the signals from the SITRANS F M sensors type MAG 1100, MAG 1100 F, MAG 3100, MAG 3100 P and MAG 5100 W.

Transmitter types:

- MAG 5000: Max. measuring error ± 0.4 % ± 1 mm/s (incl. sensor)
- MAG 6000: Max. measuring error ± 0.2 % ± 1 mm/s (incl. sensor, see also sensor specifications) and with additional features such as: "plug & play" add-on bus modules; integrated batch functions.

Benefits

- Superior signal resolution for optimum turn down ratio
- Digital signal processing with many possibilities
- Automatic reading of SENSORPROM data for easy commissioning
- User configurable operation menu with password protection.
- 3 lines, 20 characters display in 11 languages.
- Flow rate in various units
- Totalizer for forward, reverse and net flow as well as additional information available
- Multiple functional outputs for process control, minimum configuration with analogue, pulse/frequency and relay output (status, flow direction, limits)
- Comprehensive self-diagnostic for error indication and error logging (see under SITRANS F M diagnostics)
- Batch control (MAG 6000 only)
- Custody transfer approval: PTB, OIML R 117, OIML R 49, MI-001, PTB K 7.2 and OE12/C 040 for chilled water
- MAG 6000 with add-on bus modules for HART, FOUNDATION Fieldbus H1, DeviceNet, Modbus RTU/RS 485, PROFIBUS PA and DP

Application

The SITRANS F M flowmeters are suitable for measuring the flow of almost all electrically conductive liquids, pastes and slurries. The main applications can be found in:

- Water and waste water
- Chemical and pharmaceutical industries
- Food and beverage industries
- Power generation and utility

Design

The transmitter is designed as either IP67 NEMA 4X/6 enclosure for compact or wall mounting or 19" version as a 19” insert as a base to be used in:

- 19" rack systems
- Panel mounting IP20/NEMA 1 (prepared for IP65/NEMA 2 display side)
- Back of panel mounting IP20/NEMA 1
- Wall mounting IP66/NEMA 4X

Several options on 19” versions are available such as:

- Transmitters mounted in safe area for Ex ATEX approved flow sensors (incl. barriers)
- Transmitters with electrode cleaning unit on request

Function

The MAG 5000/6000 are transmitters with a build-in alphanumeric display in several languages. The transmitters evaluate the signals from the associated electromagnetic sensors and also fulfil the task of a power supply unit which provides the magnet coils with a constant current.

Further information on connection, mode of operation and installation can be found in the data sheets for the sensors.

Displays and controls

Operation of the transmitter can be carried out using:

- Control and display unit
- HART communicator
- PC/laptop and SIMATIC PDM software via HART communication
- PC/laptop and SIMATIC PDM software using PROFIBUS or Modbus communication

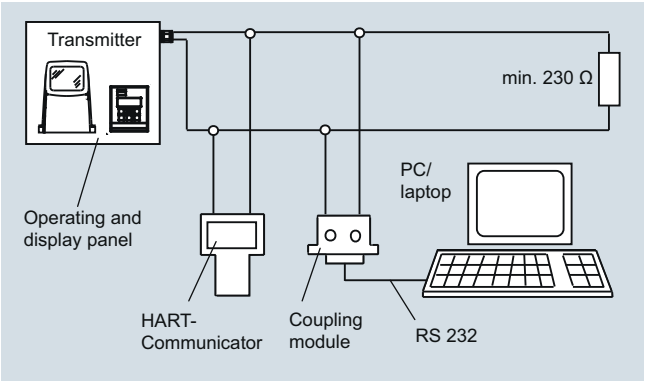

HART communication

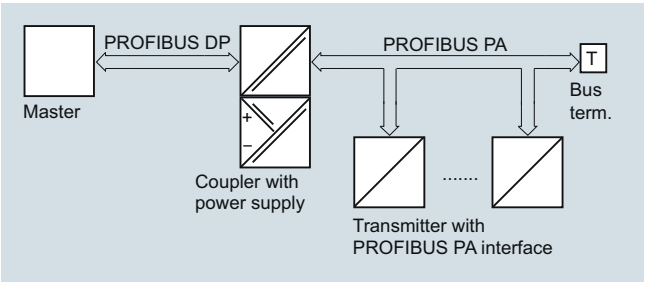

PROFIBUS PA communication

© Siemens AG 2014

3

Technical specifications

Mode of operation and design	
Measuring principle	Electromagnetic with pulsed constant field
Empty pipe	Detection of empty pipe (special cable required in remote mounted installation)
Excitation frequency	Depend on sensor size
Electrode input impedance	> 1 x 10^{14} Ω
Input	
Digital input	11 ... 30 V DC, R_i = 4.4 KΩ
• Activation time	50 ms
• Current	$I_{11\ V\ DC}$ = 2.5 mA, $I_{30\ V\ DC}$ = 7 mA
Output	
Current output	
• Signal range	0 ... 20 mA or 4 ... 20 mA
• Load	< 800 Ω
• Time constant	0.1 … 30 s, adjustable
Digital output	
• Frequency	0 ... 10 kHz, 50 % duty cycle (uni/bidirectional)
• Pulse (active)	24 V DC, 30 mA, 1 KΩ ≤ R_i ≤ 10 KΩ, short-circuit-protected (power supplied from flowmeter)
• Pulse (passive)	3 … 30 V DC, max. 110 mA, 200 Ω ≤ R_i ≤ 10 KΩ (powered from connected equipment)
• Time constant	0.1 … 30 s, adjustable
Relay output	
• Time constant	Changeover relay, same as current output
• Load	42 V AC/2 A, 24 V DC/1 A
Low flow cut off	0 ... 9.9 % of maximum flow
Galvanic isolation	All inputs and outputs are galvanically isolated.
Max. measuring error (incl. sensor and zero point)	
• MAG 5000	0.4 % ±1 mm/s
• MAG 6000	0.2 % ±1 mm/s
Rated operation conditions	
Ambient temperature	
• Operation	• Display version: -20 ... +60 °C (-4 ... +140 °F) • Blind version: -20 ... +60 °C (-4 ... +140 °F) • MI-001 version -25 ... +55 °C (-13 ... +131 °F) • Custody Transfer (CT) version -20 ... +50 °C (-4 ... +122 °F)
• Storage	-40 ... +70 °C (-40 ... +158 °F)
Mechanical load (vibration)	
Compact version	18 ... 1000 Hz, 3.17 g RMS, sinusoidal in all directions to IEC 68-2-36
19" insert	1 ... 800 Hz, 1 g, sinusoidal in all directions to IEC 68-2-36
Degree of protection	
Compact version	IP67/NEMA 4X/6 to IEC 529 and DIN 40050 (1 mH_2O 30 min.)
19" insert	IP20/NEMA 1 to IEC 529 and DIN 40050
EMC performance	IEC/EN 61326-1 (all environments) IEC/EN 61326-2-5

Display and keypad	
Totalizer	Two eight-digit counters for forward, net or reverse flow
Display	Background illumination with alphanumeric text, 3 x 20 characters to indicate flow rate, totalized values, settings and faults; Reverse flow indicated by negative sign
Time constant	Time constant as current output time constant
Design	
Enclosure material	
• Compact version	Fiber glass reinforced polyamide; stainless steel AISI 316/1.4436 (IP65)
• 19" insert	Standard 19" insert of aluminum/steel (DIN 41494), width: 21 TE, height: 3 HE
• Back of panel	IP20/NEMA 1; Aluminum
• Panel mounting	IP20/NEMA 1 (prepared for IP65/NEMA 2 display side); ABS plastic
• Wall mounting	IP66/NEMA 4X; ABS plastic
Dimensions	
Compact version	See dimensional drawings
19" insert	See dimensional drawings
Weight	
Compact version	0.75 kg (2 lb)
19" insert	See dimensional drawings
Power supply	• 115 ... 230 V AC +10 % -15 %, 50 ... 60 Hz • 11 ... 30 V DC or 11 ... 24 V AC
Power consumption	• 230 V AC: 17 VA • 24 V AC: 9 VA, I_N = 380 mA, I_{ST} = 8 A (30 ms) • 12 V DC: 11 W, I_N = 920 mA, I_{ST} = 4 A (250 ms) • 24 V DC: 8.4 VA, I_N = 350 mA, I_{ST} = 4 A (10 ms) I_{ST}= 4 A (250 ms): For solar panel please secure stable current supply
Certificates and approvals	CE, C-UL general purpose, C-tick; FM Class I, Div 2, CSA Class I, Div 2
Custody transfer approval (MAG 5000/6000 CT)	• Cold water: MI-001, PTB/OIML R 49 (pattern approval DE/DK) • Hot water: PTB and DANAK (MAG 6000 CT) • Chilled water: PTB K 7.2; OE12/C 040 • Other media than water (milk, beer etc.): PTB and DANAK OIML R 117 (pattern approval DE/DK) (MAG 6000 CT)
Communication	
Standard	
• MAG 5000	Without serial communication or HART as option
• MAG 6000	Prepared for client-mounted add-on modules
Optional (MAG 6000 only)	HART, Modbus RTU/RS 485, FOUNDATION Fieldbus H1, DeviceNet, PROFIBUS PA, PROFIBUS DP as add-on modules
• MAG 5000/6000 CT	No communication moduls approved

© Siemens AG 2014

Safety barrier (e/ia)

Application	**For use with MAG 5000/6000 19" and MAG 1100 Ex ATEX/MAG 3100 Ex ATEX**		
Ex approval	MAG 1100 Ex [EEx e ia] IIB ATEX		
	MAG 3100 Ex [EEx e ia] IIC ATEX		
Cable parameter	Group	Capacity in µF	Inductance in mH
Electrode	IIC	≤ 4.1	≤ 80
	IIB	≤ 45	≤ 87
	IIA	≤ 45	≤ 87
Ambient temperature			
• During operation	-20 ... +50 °C (-4 ... +122 °F)		
• During storage	-20 ... +70 °C (-4 ... +158 °F)		
Enclosure			
• Material	Standard 19" insert in aluminum/steel (DIN 41494)		
• Width	21 TE (4.75")		
• Height	3 HE (5.25")		
• Rating	IP20 / NEMA 1 to EN 60529		
• Mechanical load	1 g, 1 … 800 Hz sinusoidal in all directions to EN 60068-2-36		

© Siemens AG 2014

3

Selection and Ordering data

Transmitter MAG 5000

Description	Article No.	
Transmitter MAG 5000 Blind for compact and wall mounting; IP67/NEMA 4X/6, fibre glass reinforced polyamide		
• 11 ... 30 V DC/ 11 ... 24 V AC	**7ME6910-1AA30-0AA0**	
• 115 ... 230 V AC, 50/60 Hz	**7ME6910-1AA10-0AA0**	
Transmitter MAG 5000 Display for compact and wall mounting; IP67/NEMA 4X/6, fibre glass reinforced polyamide		
• 11 ... 30 V DC/ 11 ... 24 V AC	**7ME6910-1AA30-1AA0**	
• 115 ... 230 V AC, 50/60 Hz	**7ME6910-1AA10-1AA0**	
• 115 ... 230 V AC, 50/60 Hz, with HART	**7ME6910-1AA10-1BA0**	
Transmitter MAG 5000 CT for compact and wall mounting, approved for custody transfer (only with approval marks, no verification – only a complete flowmeter can be verified, i.e. sensor together with the transmitter); IP67/NEMA 4X/6, fibre glass reinforced polyamide		
• 11 ... 30 V DC/ 11 ... 24 V AC	**7ME6910-1AA30-1AB0**	
• 115 ... 230 V AC, 50/60 Hz	**7ME6910-1AA10-1AB0**	
Transmitter MAG 5000 for 19" rack and wall mounting		
• 11 ... 30 V DC/ 11 ... 24 V AC	**7ME6910-2CA30-1AA0**	
• 115 ... 230 V AC, 50/60 Hz	**7ME6910-2CA10-1AA0**	

We can offer shorter delivery times for configurations designated with the Quick Ship Symbol. For details see page 9/5 in the appendix.

Transmitter MAG 6000

Description	Article No.	
Transmitter MAG 6000 Blind for compact and wall mounting; IP67/NEMA 4X/6, fibre glass reinforced polyamide		
• 11 ... 30 V DC/ 11 ... 24 V AC	**7ME6920-1AA30-0AA0**	
• 115 ... 230 V AC, 50/60 Hz	**7ME6920-1AA10-0AA0**	
Transmitter MAG 6000 for compact and wall mounting; IP67/NEMA 4X/6, fibre glass reinforced polyamide		
• 11 ... 30 V DC/ 11 ... 24 V AC	**7ME6920-1AA30-1AA0**	
• 115 ... 230 V AC, 50/60 Hz	**7ME6920-1AA10-1AA0**	
Transmitter MAG 6000 for compact and wall mounting; IP65/NEMA 4, stainless steel AISI 316/1.4436 (only for sensor with SS terminal box) (for remote installation order SS terminal box separately)		
• 11 ... 30 V DC/ 11 ... 24 V AC	**7ME6920-1QA30-1AA0**	
• 115 ... 230 V AC, 50/60 Hz	**7ME6920-1QA10-1AA0**	
Transmitter MAG 6000 CT for compact and wall mounting, approved for custody transfer (no communication modules possible; only with approval marks, no verification – only a complete flowmeter can be verified, i.e. sensor together with the transmitter); IP67/NEMA 4X/6, fibre glass reinforced polyamide		
• 11 ... 30 V DC/ 11 ... 24 V AC	**7ME6920-1AA30-1AB0**	
• 115 ... 230 V AC, 50/60 Hz	**7ME6920-1AA10-1AB0**	
Transmitter MAG 6000 SV for compact and wall mounting; special excitation 44 Hz settings for Batch application DN ≤ 25/1" IP67/NEMA 4X/6, fibre glass reinforced polyamide		
11 ... 30 V DC/ 11 ... 24 V AC	**7ME6920-1AB30-1AA0**	
115 ... 230 V AC, 50/60 Hz	**7ME6920-1AB10-1AA0**	
Transmitter MAG 6000 for 19" rack and wall mounting		
• 11 ... 30 V DC/ 11 ... 24 V AC	**7ME6920-2CA30-1AA0**	
• 115 ... 230 V AC, 50/60 Hz	**7ME6920-2CA10-1AA0**	

© Siemens AG 2014

Description	Article No.	
Transmitter MAG 6000 SV for 19“ rack and wall mounting; special excitation 44 Hz settings for Batch application DN ≤ 25/1“		
• 11 ... 30 V DC/ 11 ... 24 V AC	**7ME6920-2CB30-1AA0**	
• 115 ... 230 V AC, 50/60 Hz	**7ME6920-2CB10-1AA0**	
MAG 6000 with IP66/NEMA 4X enclosure; 115 ... 230 V AC, 50/60 Hz; cable gland PG13.5	**7ME6920-2EA10-1AA0**	
MAG 6000 with safety barrier for Ex-approved sensors, complete mounted with IP66/NEMA 4X wall mounting enclosure, ATEX, 115 ... 230 V AC, 50/60 Hz; cable gland PG13.5		
• For ATEX 2G D sensors	**7ME6920-2MA11-1AA0**	
MAG 6000 SV, 19” insert, in IP66/NEMA 4X , ABS plastic enclosure, excitation frequency 44 Hz for Batch application DN ≤ 25/1“; cable gland PG13.5		
• 11 … 30 V DC, 11 … 24 V AC, 50/60 Hz	**7ME6920-2EB30-1AA0**	
• 115 … 230 V AC, 50/60 Hz	**7ME6920-2EB10-1AA0**	

⬟ We can offer shorter delivery times for configurations designated with the Quick Ship Symbol ⬟. For details see page 9/5 in the appendix.

Operating instructions for SITRANS F M MAG 5000/6000

Description	Article No.
For SITRANS F M MAG 5000/6000 IP67	
• English	**A5E02338368**
• German	**A5E02944982**
• Spanish	**A5E02944995**
• French	**A5E02944990**
For SITRANS F M MAG 5000/6000 19"	
• English	**A5E02082880**

This device is shipped with a Quick Start guide and a CD containing further SITRANS F literature.

All literature is also available for free at:
http://www.siemens.com/flowdocumentation

Communication modules for MAG 6000

Description	Article No.	
HART (not for MAG 6000 I) ⬟	**FDK:085U0226**	
Modbus RTU/RS 485 ⬟	**FDK:085U0234**	
PROFIBUS PA Profile 3 ⬟	**FDK:085U0236**	
PROFIBUS DP Profile 3 ⬟	**FDK:085U0237**	
DeviceNet ⬟	**FDK:085U0229**	
FOUNDATION Fieldbus H1	**A5E02054250**	

Operating instructions for SITRANS F add-on modules

Description	Article No.
HART	
• English	**A5E03089708**
PROFIBUS PA/DP	
• English	**A5E00726137**
• German	**A5E01026429**
Modbus	
• English	**A5E00753974**
• German	**A5E03089262**
• Spanish	**A5E03089278**
• French	**A5E03089265**
FOUNDATION Fieldbus	
• English	**A5E02318728**
• German	**A5E02488856**
• Spanish	**A5E02512177**
• French	**A5E02512169**
DeviceNet	
• English	**A5E03089720**

This device is shipped with a Quick Start guide and a CD containing further SITRANS F literature.

Accessories for MAG 5000 and MAG 6000

required for remote mount

Description	Article No.	
Wall mounting unit for IP67/ NEMA 4X/6 version, wall bracket, terminal box in polyamide[1]		
• 4 x M20 cable glands ⬟	**FDK:085U1018**	
• 4 x ½“ NPT cable glands ⬟	**FDK:085U1053**	
Sun lid for MAG 5000/6000 transmitter (Frame and lid)	**A5E02328485**	
Cable for standard electrode or coil, 3 x 1.5 mm² / 18 gage with shield PVC; Temperature range: -30 ... +70 °C (-22 ... +158 °F)		
• 10 m (33 ft) ⬟	**FDK:083F0121**	
• 20 m (65 ft) ⬟	**FDK:083F0210**	
• 40 m (130 ft) ⬟	**FDK:083F0211**	
• 60 m (200 ft) ⬟	**FDK:083F0212**	
• 100 m (330 ft)	**FDK:083F0213**	
• 150 m (500 ft)	**FDK:083F3052**	
• 200 m (650 ft)	**FDK:083F3053**	
• 500 m (1650 ft)	**FDK:083F3054**	

⬟ We can offer shorter delivery times for configurations designated with the Quick Ship Symbol ⬟. For details see page 9/5 in the appendix.

[1] For stainless steel wall mounting kit, order:
- M20: FDK:085U1018 and A5E00836867
- ½ NPT: FDK:085U1053 and A5E00836868

© Siemens AG 2014

Transmitter MAG 5000/6000

Description	Article No.	
Electrode cable for empty pipe or low conductivity[1], double shielded, 3 x 0.25 mm². Temperature range : -30 ... +70 °C (-22 ... +158 °F)		
• 10 m (33 ft)	**FDK:083F3020**	
• 20 m (65 ft)	**FDK:083F3095**	
• 40 m (130 ft)	**FDK:083F3094**	
• 60 m (200 ft)	**FDK:083F3093**	
• 100 m (330 ft)	**FDK:083F3092**	
• 150 m (500 ft)	**FDK:083F3056**	
• 200 m (650 ft)	**FDK:083F3057**	
• 500 m (1650 ft)	**FDK:083F3058**	
Low-noise electrode coax cable for low conductivity and high vibration levels of cables, 3 x 0.13 mm²		
	A5E02272692	
	A5E02272723	
• 10 m (33 ft)	**A5E02272730**	
Cable kit with standard coil cable[1], 3 x 1.5 mm²/18 gage with shield PVC and electrode cable double shielded, 3 x 0.25 mm² Temperature range: -30 ... +70 °C (-22 ... +158 °F)		
• 5 m (16.5 ft)	**A5E02296329**	
• 10 m (33 ft)	**A5E01181647**	
• 15 m (49 ft)	**A5E02296464**	
• 20 m (65 ft)	**A5E01181656**	
• 25 m (82 ft)	**A5E02296490**	
• 30 m (98 ft)	**A5E02296494**	
• 40 m (130 ft)	**A5E01181686**	
• 50 m (164 ft)	**A5E02296498**	
• 60 m (200 ft)	**A5E01181689**	
• 100 m (330 ft)	**A5E01181691**	
• 150 m (500 ft)	**A5E01181699**	
• 200 m (650 ft)	**A5E01181703**	
• 500 m (1650 ft)	**A5E01181705**	
Potting kit for terminal box of flow sensors for IP68/NEMA 6P	**FDK:085U0220**	
19" safety barrier (21 TE)[1] [EEx e ia] IIC for MAG 1100 Ex sensors and MAG 3100 Ex sensors 12 ... 24 V, 115 ... 230 V, incl. back plate (A5E02559810)	**FDK:083F5034**	
Panel mounting enclosure for 19" insert (21 TE); IP65/NEMA 2 enclosure in ABS plastic for front panel mounting	**FDK:083F5030**	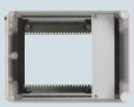
Panel mounting enclosure for 19" insert (42 TE); IP65/NEMA 2 enclosure in ABS plastic for front panel mounting	**FDK:083F5031**	

required for remote mount

Description	Article No.	
Back of panel mounting enclosure for 19" insert (21 TE); IP20/NEMA 1 enclosure in aluminum	**FDK:083F5032**	
Back of panel mounting enclosure for 19" insert (42 TE); IP20/NEMA 1 enclosure in aluminum	**FDK:083F5033**	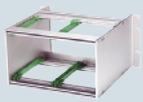
IP66/NEMA 4X, wall mounting enclosure for 19" inserts (without back plates). Use with PCB A5E02559813 or A5E02559814. Cable glands (FDK:083G0288) not included		
• 21 TE	**FDK:083F5037**	
• 42 TE	**FDK:083F5038**	
Front cover (7TE) for panel mounting enclosure	**FDK:083F4525**	
Sun shield for remote MAG 5000/6000 transmitters	**A5E01209496**	
Sun Shield for compact MAG 5000/6000 transmitters on MAG 3100 (DN 15 ... 2000 (½" ... 78") or MAG 5100 W (DN 150 ... 1200 (6" ... 48")	**A5E01209500**	

We can offer shorter delivery times for configurations designated with the Quick Ship Symbol. For details see page 9/5 in the appendix.

[1] Special cables cannot be used with 19" safety barrier

© Siemens AG 2014

Spare parts

Description	Article No.	
Connection board (for polyamide terminalbox)		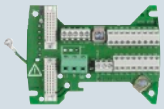
• 12 ... 24 V	**A5E02559817**	
• 115 ... 230 V	**A5E02559816**	
Connection board (for stainless steel terminal-box)		
• 12 ... 24 V	**A5E02604280**	
• 115 ... 230 V	**A5E02604272**	
19" enclosure, 12 ... 24 V, 115 ... 230 V		
• Connection board for standard 19" transmitter	**A5E02559809**	
• Connection board for transmitter ia and safety barrier	**A5E02559810**	
• Connection board for transmitter ia/ib and safety barrier (only for sensors produced before October 2007)	**A5E02559811**	
• Connection board for transmitter and cleaning unit	**FDK:083F4123**	
SENSORPROM memory unit (Sensor code and serial numbers must be specified on order)		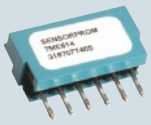
• 2 kB (for MAG 5000/6000/ MAG 6000 I)		
- 1 pc.	**FDK:085U1005**	
- 10 pcs.	**FDK:083F5052**	
• 250 B (for MAG 2500/3000)	**FDK:085U1008**	
Display unit for MAG 5000/6000		
• Black neutral front	**FDK:085U1038**	
• Siemens front	**FDK:085U1039**	
HW key	**On request**	

Description	Article No.	
Cable glands, for above cable, 4 pcs.		½" NPT M20
• M20 ⬟	**A5E00822490**	
• ½" NPT ⬟	**A5E00822501**	
• PG 13.5, 2 pcs.	**FDK:083G0228**	
Sealing screws for sensor/ transmitter, 2 pcs	**FDK:085U0221**	
Terminal box, in polyamide, inclusive lid, terminal blocks, gasket and screws		
• M20	**FDK:085U1050**	
• ½" NPT	**FDK:085U1052**	
Terminal box lid, in polyamide	**FDK:085U1003**	
Terminal box, in stainless steel, inclusive lid, terminal blocks, gasket and screws, for MAG 6000 in stainless steel and for all Ex sensors,		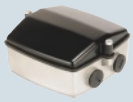
• M20	**A5E00836867**	
• ½" NPT	**A5E00836868**	
Terminal box (3A) for MAG 1100 F in polyamide, inclusive lid, terminal blocks, gasket and screws		
• M20	**A5E00822478**	
• ½" NPT	**A5E00822479**	
Wall unit enclosure IP66, 12 ... 24 V, 115 ... 230 V		
• PCB for standard transmitter	**A5E02559813**	
• PCB for transmitter ia/e and safety barrier	**A5E02559814**	
• PCB for transmitter ia/ib and safety barrier (7ME6130, 7ME6150 and 7ME6330)	**A5E02559812**	
• PCB for transmitter and cleaning unit	**A5E02559815**	

⬟ We can offer shorter delivery times for configurations designated with the Quick Ship Symbol ⬟. For details see page 9/5 in the appendix.

© Siemens AG 2014

3

Dimensional drawings

Transmitter IP67/NEMA 4X/6 compact polyamide

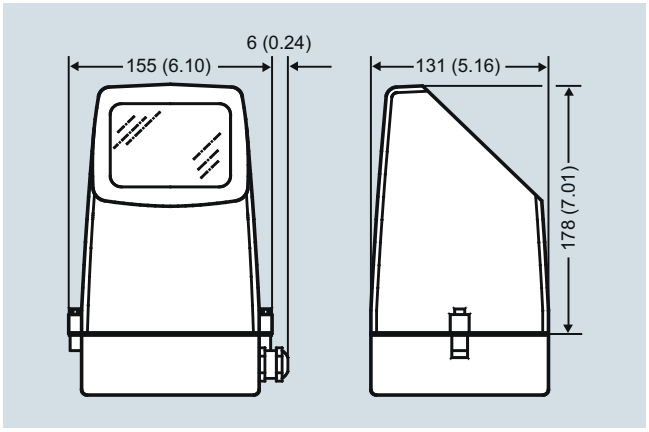

Transmitter compact mounted, dimensions in mm (inch)

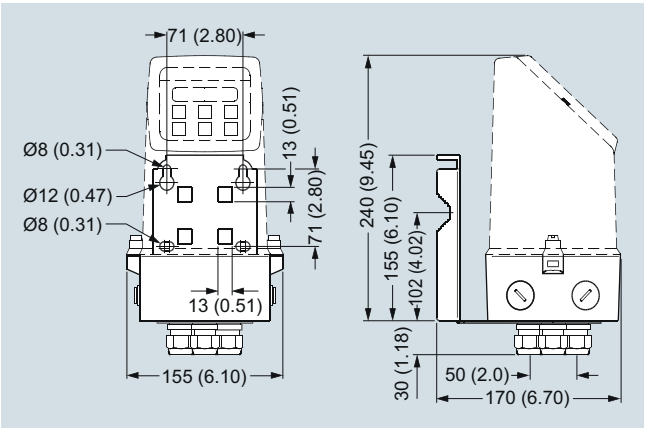

Transmitter wall mounted, dimensions in mm (inch)

Transmitter, 19" IP20/NEMA 1 standard unit

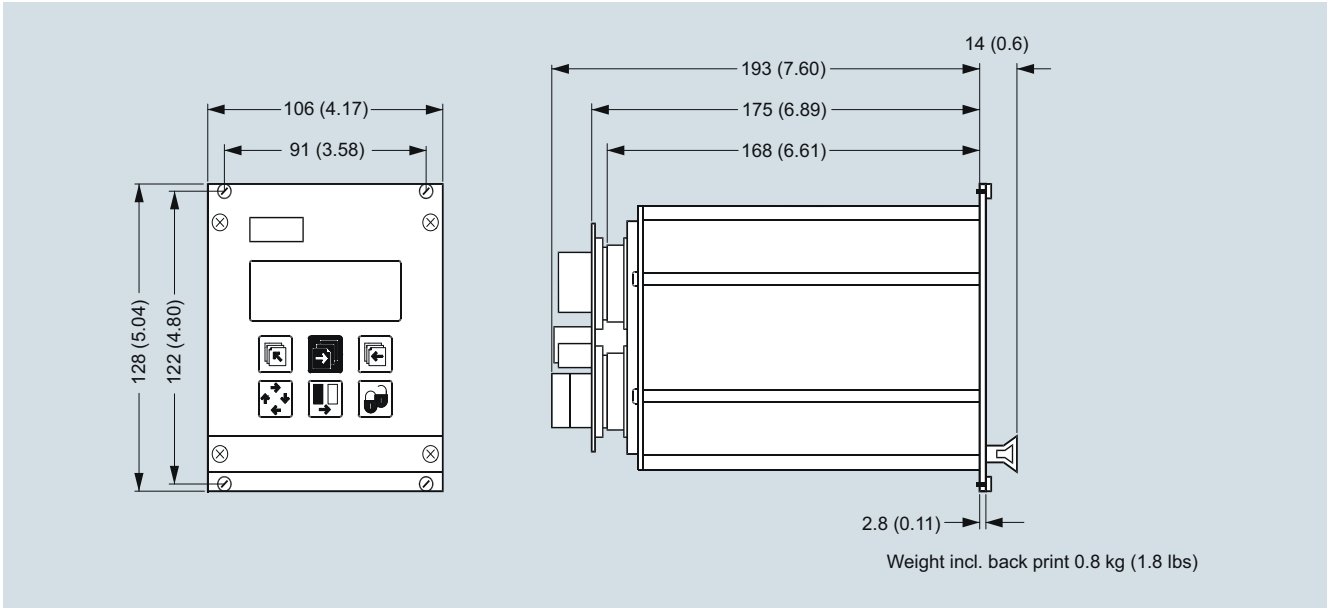

Dimensions in mm (inch)

© Siemens AG 2014

3

Schematics

Electrical connection

Grounding

PE must be connected due to safety class 1 power supply.

Mechanical counters

When mounting a mechanical counter to terminals 57 and 58 (active output), a 1000 µF capacitor must be connected to the terminals 56 and 58. Capacitor + is connected to terminal 56 and capacitor - to terminal 58.

Output cables

If the output cable length is long in noisy environment, we recommend to use shielded cable.

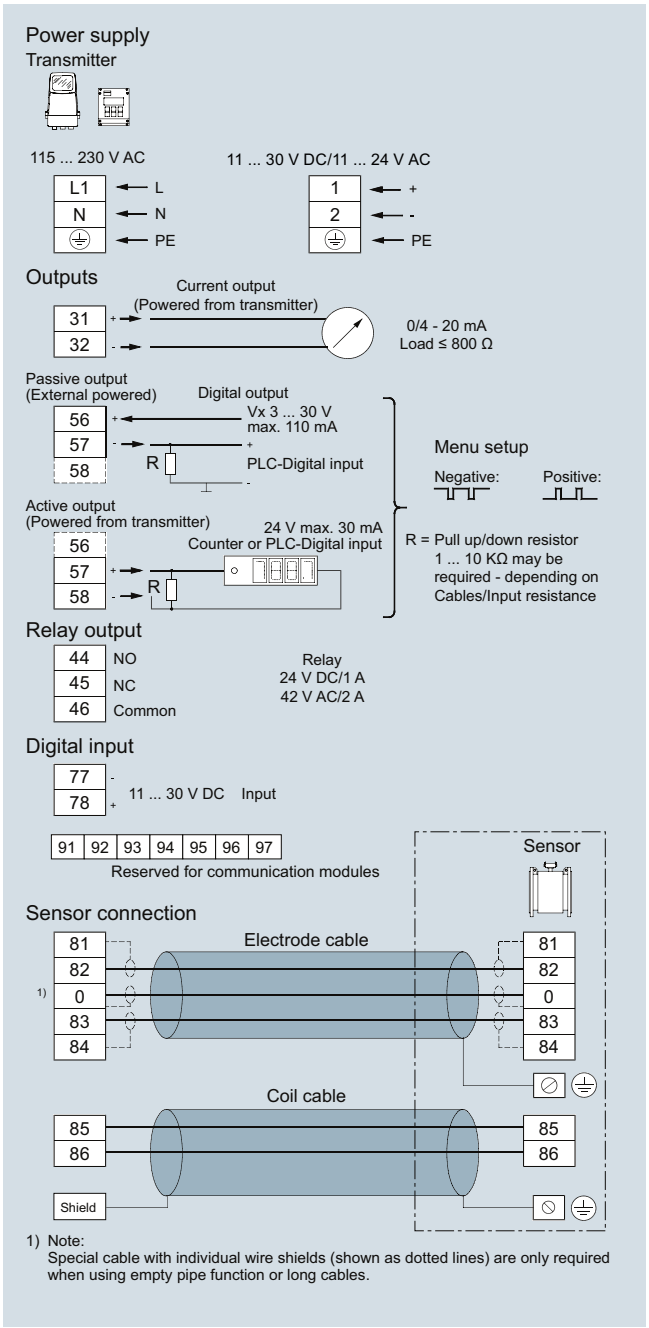

© Siemens AG 2014

Flow sensor MAG 5100 W

Overview

The SITRANS F M MAG 5100 W is an electromagnetic flow sensor designed to meet ground water, drinking water, waste water, sewage or sludge applications.

Benefits

- DN 15 to DN 1200 / 2000 (½" to 48"/78")
- Stock program of MAG 5100 W secures short delivery time
- Connection flanges EN 1092-1 (DIN 2501), ANSI, AWWA, AS and JIS.
- NBR Hard Rubber and Ebonite Hard Rubber liner for all water applications
- EPDM liner with drinking water approvals
- Hastelloy integrated grounding and measuring electrodes
- Increased low flow accuracy for water leak detection, due to coned liner design (Article No. 7ME6520, DN 15 to 300 mm (½" to 12")).
- Drinking water approvals
- Suitable for direct burial and constant flooding
- Custody transfer approvals
- Build-in length according to ISO 13359; the standard includes sizes up to DN 400.
- Easy commissioning, SENSORPROM unit automatically uploads calibration values and settings.
- Designed so patented in-situ verification can be conducted. Using SENSORPROM fingerprint.
- Custody Transfer option for water billing, with type approval after OIML R 49 and verified according to MI-001 - 0D inlet/ 0D outlet installation
  - pattern approval OIML R 49 (Denmark, Germany)
  - conforms to ISO 4064 and EN 14154 for mechanical flowmeters
  - PTB K7.2
- FM Fire Service Meter (Class Number 1044) for automatic fire protection systems
- Meets EEC directives: PED, 97/23/EC pressure directive for EN1092-1 flanges
- Simple onsite or factory upgrade to IP68/NEMA 6P of a standard sensor
- MCERTS approval for UK environmental market

Application

The main applications of the SITRANS F M electromagnetic flow sensors can be found in the following fields:

- Water abstraction
- Water treatment
- Water distribution network (leak detection management)
- Custody transfer water meters
- Irrigation
- Waste water treatment
- Filtration plant (e.g. reverse osmosis and ultra filtration)
- Industrial water applications

Mode of operation

The flow measuring principle is based on Faradays law of electromagnetic induction according to which the sensor converts the flow into an electrical voltage proportional to the velocity of the flow.

Integration

The complete flowmeter consists of a flow sensor and an associated transmitter SITRANS F M MAG 5000, MAG 6000 or MAG 6000 I.

The flexible communication concept USM II simplifies integration and update to a variety of fieldbus systems, e.g. HART, DeviceNet, PROFIBUS DP and PA, FOUNDATION Fieldbus H1 or Modbus RTU/RS 485.

© Siemens AG 2014

Technical specifications

Product characteristic	**MAG 5100 W (7ME6520)** **Mainly for the European market** **EPDM or NBR lining**	**MAG 5100 W (7ME6580)** **Mainly for the non-European market** **Ebonite lining**
Design and nominal size	Coned sensor (octagon liner): DN 15 ... 40 (½" ... 1½") Coned sensor: DN 50 ... 300 (2" ... 12") Full bore sensor: DN 350 ... 1200 (14" ... 48")	Full bore sensor: DN 25 ... 2000 (1" ... 78")
Measuring principle	Electromagnetic induction	Electromagnetic induction
Excitation frequency (Mains supply: 50/60 Hz)	DN 15 ... 65 (½" ... 2½"): 12.5 Hz/15 Hz DN 80 ... 150 (3" ... 6"): 6.25 Hz/7.5 Hz DN 200 ... 300 (8" ... 12"): 3.125 Hz/3.75 Hz DN 350 ... 1200 (14" ... 48"): 1.5625 Hz/1.875 Hz	DN 25 ... 65 (1" ... 2½"): 12.5 Hz/15 Hz DN 80 ... 150 (3" ... 6"): 6.25 Hz/7.5 Hz DN 200 ... 1200 (8" ... 48"): 3.125 Hz/3.75 Hz DN 1400 ... 2000 (54" ... 78"): 1.5625 Hz/1.875 Hz
Process connection		
Flanges[1]		
• EN 1092-1	PN 10 (145 psi) : DN 200 ... 300 (8" ... 12") Flat face PN 10 (145 psi): DN 350 ... 1200 (14" ... 48") Raised face[2] PN 16 (232 psi): DN 50 ... 300 (2" ... 12") Flat face[3] PN 16 (232 psi): DN 350 ... 1200 (14" ... 48") Raised face PN 40 (580 psi): DN 15 ... 40 (½" ... 1½") Flat face	Raised face[3] (EN 1092-1, DIN 2501 and BS 4504 have the same mating dimensions) PN 6 (87 psi): DN 1400 ... 2000 (54" ... 78") PN 10 (145 psi): DN 200 ... 2000 (8" ... 78") PN 16 (232 psi): DN 65 ... 600 (2½" ... 24") PN 40 (580 psi): DN 25 ... 50 (1" ... 2")
• ANSI B16.5	Class 150: ½" ... 12" flat face; 14" ... 24" raised face	Class 150: 1" ... 24"; raised face
• AWWA C-207	Class D: 28" ... 48", flat face	Class D: 28" ... 78", flat face
• AS4087	PN 16 (DN 50 ... 1200), (2" ... 48") 16 bar (232 psi)	PN 16 (DN 50 ... 1200), (2" ... 48") 16 bar (232 psi)
• JIS B 2220:2004	-	K10 (1" ... 24")
Rated Operation conditions		
Ambient temperature		
• Sensor	-40 ... +70 °C (-40 ... +158 °F)	-20 ... +70 °C (-4 ... +158 °F)
• With compact transmitter MAG 5000/6000[4]	-20 ... +60 °C (-4 ... +140 °F)	-20 ... +60 °C (-4 ... +140 °F)
Operating pressure (Abs) [abs. bar] (Maximum operating pressure depending on flange standard, decreases with increasing operating temperature)	DN 15 ... 40 (½" ... 1½"): 0.01 ... 40 bar (0.15 ... 580 psi) DN 50 ... 300 (2" ... 12"): 0.03 ... 20 bar (0.44 ... 290 psi) DN 350 ... 1200 (14" ... 48"): 0.01 ... 16 bar (0.15 ... 232 psi)	DN 25 ... 50 (1" ... 2"): 0.01 ... 40 bar (0.15 ... 580 psi) DN 65 ... 1200 (2½" ... 48"): 0.01 ... 16 bar (0.15 ... 232 psi) DN 1400 ... 2000 (54" ... 78"): 0.01 ... 10 bar (0.15 ... 145 psi)
Enclosure rating		
• Standard	IP67 to EN 60529/NEMA 4X/6 (1 mH_2O for 30 min)	IP67 to EN 60529/NEMA 4X/6 (1 mH_2O for 30 min)
• Option	IP68 to EN 60529/NEMA 6P (10 mH_2O continuously)	IP68 to EN 60529/NEMA 6P (10 mH_2O continuously)
Pressure drop	DN 15 and 25 (½" and 1"): Max. 20 mbar (0.29 psi) at 1 m/s (3 ft/s). DN 40 ... 300 (1½" ... 12"): Max 25 mbar (0.36 psi) at 3 m/s (10 ft/s) DN 350 ... 1200 (14" ... 48"): Insignificant	Insignificant
Test pressure	1.5 x PN (where applicable) FM Fire Service: 2 x PN	1.5 x PN (where applicable)
Mechanical load (vibration)	18 ... 1000 Hz random in x, y, z, directions for 2 hours according to EN 60068-2-36 Sensor: 3.17 g RMS Sensor with compact MAG 5000/6000 mounted transmitter: 3.17 g RMS Sensor with compact MAG 6000 I mounted transmitter: 1.14 g RMS	18 ... 1000 Hz random in x, y, z, directions for 2 hours according to EN 60068-2-36 Sensor: 3.17 g RMS Sensor with compact MAG 5000/6000 mounted transmitter: 3.17 g RMS Sensor with compact MAG 6000 I mounted transmitter: 1.14 g RMS

© Siemens AG 2014

Flow sensor MAG 5100 W

Product characteristic	Mainly for the European market (7ME6520)	Mainly for the non-European market (7ME6580)
	EPDM or NBR lining	**Ebonite lining**
Medium conditions		
Temperature of medium		
• NBR	-10 ... +70 °C (14 ... 158 °F)	-
• EPDM	-10 ... +70 °C (14 ... 158 °F)	-
• EPDM/NBR (MI-001)	0.1 ... 30 °C (32 ... 76 °F)	-
• Ebonite	-	-10 ... +70 °C (14 ... 158 °F)
EMC	2004/108/EC	2004/108/EC
Design		
Material		
• Housing and flanges	Carbon steel ASTM A 105, with corrosion-resistant two-component epoxy coating (150 µm/300 µm) Corrosivity category C4, according to ISO 12944-2	Carbon steel ASTM A 105, with corrosion-resistant two-component epoxy coating (150 µm/300 µm) Corrosivity category C4, according to ISO 12944-2
• Measuring pipe	Stainless steel AISI 304/1.4301	Stainless steel AISI 304/1.4301
• Electrode	Hastelloy C	Hastelloy C
• Grounding electrode	Hastelloy C	Hastelloy C
• Terminal box	Fibre glass reinforced polyamide	Fibre glass reinforced polyamide
Certificates and approvals		
Calibration		
• Standard production calibration (default), calibration report shipped with sensor	Zero-point, 2 x 25 % and 2 x 90 %	Zero-point, 2 x 25 % and 2 x 90 %
• Special calibration	5-point calibration: 20 %, 40 %, 60 %, 80 %, 100 % of factory Q_{max}	5-point calibration: 20 %, 40 %, 60 %, 80 %, 100 % of factory Q_{max}
	10-point calibration: ascending and descending at 20 %, 40 %, 60 %, 80 %, 100 % of factory Q_{max}	10-point calibration: ascending and descending at 20 %, 40 %, 60 %, 80 %, 100 % of factory Q_{max}
	Matched-pair calibration: default, 5-point or 10-point	Matched-pair calibration: default, 5-point or 10-point
Material certificate EN 10204 3.1	Available when ordering together with meter[5)]	Available when ordering together with meter[5)]
Custody Transfer (only together with MAG 6000 CT)	OIML R 49 pattern approval cold water (Denmark and Germany): DN 50 ... 300 (2“ ... 12")	
	MI-001 cold water (EU): DN 50 ... 300 (2“ ... 12")	
	PTB K7.2: Chilled water energy metering DN 50-300 (order as special) Certificate number: 22 76.10 02	
Drinking water approvals	EPDM liner: NSF/ANSI Standard 61[6)] (Cold water, US) WRAS (WRc, BS6920 cold water, GB) ACS (F), DVGW W270 (D) Belgaqua (B)	NSF/ANSI Standard 61[6)] (Cold water, US) WRAS (WRc, BS6920 cold water, GB)
Other approvals	MCERTS	
	PED conforming: All EN1092-1 flanges and ANSI Class 150 (< DN 300 (<12")) – 97/23/EC[7)]	PED conforming: All EN1092-1 flanges (≤ DN 600 (≤ 24") – 97/23/EC[7)]
	CRN (DN 50 - DN 1200 (2" ... 48"))	CRN
	CSA Class I, Div 2[8)]	CSA Class I, Div 2[8)]
	FM Class I, Div 2[8)]	FM Class I, Div 2[8)]
	FM Fire Service Approval according to class 1044[8)9)]	
	VdS: Extinguishing systems DN 50 ... 300	

1) DN 750, DN 1050 and DN 1100 (30", 42" and 44") not available with EN 1092-1 (PN 10 and PN 16) and AS4087 flanges
2) Type 01 (SORF)
3) DN ≤ 600 type 01 (SORF); DN > 600 type 11
4) With compact transmitter MAG 5000 CT/6000 CT -20 ... +50 °C (-4 ... +122 °F); with compact MI-001 approved transmitter -25 ... +55 °C (-13 ... +131 °F)
5) Has to be ordered with the meter. It is not possible to order the certificate afterwards.
6) Including Annex G
7) For sizes larger than 600 mm (24”) in PN 16 PED conformity is available as a cost-added option. The basic unit will carry the LVD (Low Voltage Directive) and EMC approval. All products sold outside of EU and EFTA are excluded from the directive, also products sold into certain market sectors are excluded. These include:
a) Meters used in networks for the supply, distribution and discharge of water.
b) Meters used in pipelines for the conveyance of any fluid from offshore to onshore.
c) Meters used in the extraction of petroleum or gas, including Christmas tree and manifold equipment.
d) Any meter mounted on a ship or mobile offshore platform. For further information on the PED standard and requirements see page 9/6.
8) Not for sensors with 300 µm coating.
9) DN 50, DN 80, DN 100, DN 150, DN 200, DN 250, and DN 300 (2", 3", 4", 6", 8", 10", and 12") with ANSI B16.5 Class 150 flanges

© Siemens AG 2014

MAG 5100 W (7ME6520) with MAG 6000 CT (Revenue program) MI-001

MAG 5100 W CT program is type approved according to international water meter standard OIML R 49. Since the first November 2006 the MI-001 water meter directive is in force, which means that all water meters can be sold across the EU borders if the water meters contain a MI-001 label.

The MAG 5100 W MI-001 verified and labeled products are a Class II approval according to Directive 2004/22/EC of the European Parliament and Council of March 31, 2004 on measuring instruments (MID), Annex MI-001 in the sizes from DN 50 to DN 300 (Article No. 7ME6520).

The MID certification is obtained as a modul B + D module approval according to the above mentioned directive.

Module B : Type approval according to OIML R 49

Module D : Quality insurance approval of production

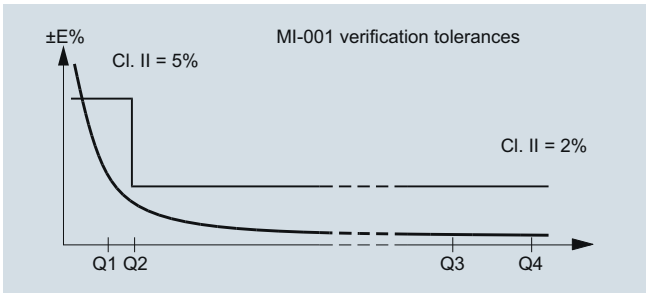

MAG 5100 W (7ME6520) with MAG 5000/MAG 6000 or MAG 6000 CT for Fire Service applications

MAG 5100 W (7ME6520) is FM Fire Service approved for automatic fire protection systems. The approval is applicable for the sizes DN 50, DN 80, DN 100, DN 150, DN 200, DN 250 and DN 300 (2", 3", 4", 6", 8", 10" and 12") with ANSI B16.5 Class 150 flanges. The FM Fire Service approved product can be ordered via the Z-options P20, P21 and P22.

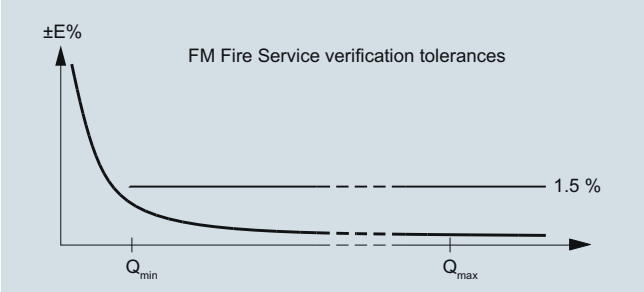

© Siemens AG 2014

Flow sensor MAG 5100 W

MAG 5100 W (7ME6520) MI-001 verified and labeled products at a given Q3 and Q3/Q4 = 1.25 and Q2/Q1 = 1.6 measuring ranges see table below:

Order code: P11	**DN 50 (2“)**	**DN 65 (2½“)**	**DN 80 (3“)**	**DN 100 (4“)**	**DN 125 (5“)**	**DN 150 (6“)**	**DN 200 (8“)**	**DN 250 (10“)**	**DN 300 (12“)**
„R“ Q3/Q1	25	25	25	25	25	25	25	25	25
Q4 [m^3/h]	20	31.25	50	78.75	125	200	312.5	500	787.5
Q3 [m^3/h]	**16**	**25**	**40**	**63**	**100**	**160**	**250**	**400**	**630**
Q2 [m^3/h]	1.02	1.6	2.6	4.03	6.4	10.24	16	25.6	40.32
Q1 [m^3/h]	0.64	1.00	1.60	2.52	4.0	6.4	10.0	16.0	25.2

Order code: P12	**DN 50 (2“)**	**DN 65 (2½“)**	**DN 80 (3“)**	**DN 100 (4“)**	**DN 125 (5“)**	**DN 150 (6“)**	**DN 200 (8“)**	**DN 250 (10“)**	**DN 300 (12“)**
„R“ Q3/Q1	63	63	63	63	63	63	63	63	63
Q4 [m^3/h]	20	31.25	50	78.75	125	200	312.5	500	787.5
Q3 [m^3/h]	**16**	**25**	**40**	**63**	**100**	**160**	**250**	**400**	**630**
Q2 [m^3/h]	0.41	0.63	1.02	1.6	2.54	4.06	6.35	10.2	16.0
Q1 [m^3/h]	0.25	0.40	0.63	1.00	1.59	2.54	3.97	6.35	10.0

Order code: P13	**DN 50 (2“)**	**DN 65 (2½“)**	**DN 80 (3“)**	**DN 100 (4“)**	**DN 125 (5“)**	**DN 150 (6“)**	**DN 200 (8“)**	**DN 250 (10“)**	**DN 300 (12“)**
„R“ Q3/Q1	80	80	80	80	80	80	80	80	80
Q4 [m^3/h]	20	31.25	50	78.75	125	200	312.5	500	787.5
Q3 [m^3/h]	**16**	**25**	**40**	**63**	**100**	**160**	**250**	**400**	**630**
Q2 [m^3/h]	0.32	0.50	0.80	1.20	2.00	3.20	5.0	8.0	12.6
Q1 [m^3/h]	0.20	0.31	0.50	0.75	1.25	2.00	3.13	5.0	7.90

Order code: P16	**DN 50 (2“)**	**DN 65 (2½“)**	**DN 80 (3“)**	**DN 100 (4“)**	**DN 125 (5“)**	**DN 150 (6“)**	**DN 200 (8“)**	**DN 250 (10“)**	**DN 300 (12“)**
„R“ Q3/Q1	160	160	160	160	160	160	160	160	160
Q4 [m^3/h]	50	78.75	125	200	312.5	500	787.5	1250	2000
Q3 [m^3/h]	**40**	**63**	**100**	**160**	**250**	**400**	**630**	**1000**	**1600**
Q2 [m^3/h]	0.40	0.63	1.00	1.60	2.50	4.00	6.3	10.0	16.0
Q1 [m^3/h]	0.25	0.39	0.63	1.00	1.56	2.50	3.94	6.3	10.0

Order code: P17	**DN 50 (2“)**	**DN 65 (2½“)**	**DN 80 (3“)**	**DN 100 (4“)**	**DN 125 (5“)**	**DN 150 (6“)**	**DN 200 (8“)**	**DN 250 (10“)**	**DN 300 (12“)**
„R“ Q3/Q1	200	200	200	200	200	200	200	200	200
Q4 [m^3/h]	50	78.75	125	200	312.5	500	787.5	1250	2000
Q3 [m^3/h]	**40**	**63**	**100**	**160**	**250**	**400**	**630**	**1000**	**1600**
Q2 [m^3/h]	0.32	0.50	0.80	1.28	2.00	3.20	5.0	8.0	12.8
Q1 [m^3/h]	0.20	0.32	0.50	0.80	1.25	2.00	3.15	5.0	8.0

Order code: P18	**DN 50 (2“)**	**DN 65 (2½“)**	**DN 80 (3“)**	**DN 100 (4“)**	**DN 125 (5“)**	**DN 150 (6“)**	**DN 200 (8“)**	**DN 250 (10“)**	**DN 300 (12“)**
„R“ Q3/Q1	250	250	250	250	250	250	250	250	250
Q4 [m^3/h]	50	78.75	125	200	312.5	500	787.5	1250	2000
Q3 [m^3/h]	**40**	**63**	**100**	**160**	**250**	**400**	**630**	**1000**	**1600**
Q2 [m^3/h]	0.26	0.40	0.64	1.02	1.60	2.56	4.0	6.4	10.24
Q1 [m^3/h]	0.16	0.25	0.40	0.64	1.00	1.60	2.52	4.0	6.4

The Label is placed on the side of the encapsulation. An example of the product label is shown below:

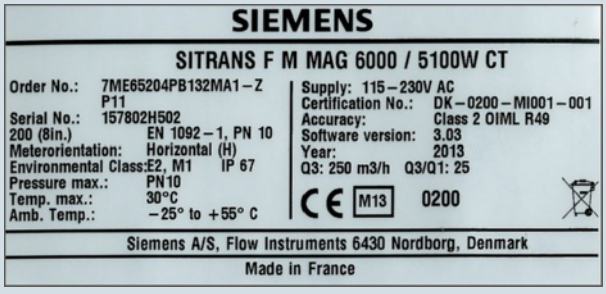

OIML R 49/MI-001 approvals valid for:

- DN 50 to 300 mm (2" to 12")
- Horizontal installation
- Compact or remote with max. 3 m cable
- Power supply 115/230 V AC

Other restrictions may apply (see certificate).

Special OIML / MI-001 settings:

- Unit: m^3
- Qmax: Q3
- Digital output: Frequency

For other factory settings, see Operating Instructions.

© Siemens AG 2014

Selection and Ordering data		Article No.
Sensor SITRANS F M MAG 5100 W	↗	7ME6520-
Hastelloy electrodes, carbon steel flanges, EU water markets and low flow applications		-2
↗ Click on the Article No. for the online configuration in the PIA Life Cycle Portal.		
Diameter		
DN 15 (½")	⬟	1V
DN 25 (1")	⬟	2D
DN 40 (1½")	⬟	2R
DN 50 (2")	⬟	2Y
DN 65 (2½")	⬟	3F
DN 80 (3")	⬟	3M
DN 100 (4")	⬟	3T
DN 125 (5")	⬟	4B
DN 150 (6")	⬟	4H
DN 200 (8")	⬟	4P
DN 250 (10")	⬟	4V
DN 300 (12")	⬟	5D
DN 350 (14")		5K
DN 400 (16")		5R
DN 450 (18")		5Y
DN 500 (20")		6F
DN 600 (24")		6P
DN 700 (28")		6Y
DN 750 (30")		7D
DN 800 (32")		7H
DN 900 (36")		7M
DN 1000 (40")		7R
(42")		7U
(44")		7V
DN 1200 (48")		8B
Flange norm and pressure rating		
to EN 1092-1		
PN 10 (DN 200 ... 1200/8" ... 48")	⬟	B
PN 16 (DN 50 ... 1200/2" ... 48")	⬟	C
PN 16, non PED (DN 700 ... 1200/28" ... 48")		D
PN 40 (DN 15 ... 40/½" ... 1½")	⬟	F
to ANSI B16.5		
class 150 (½" ... 24")	⬟	J
to AWWA C-207		
Class D (28" ... 48")		L
to AS 4087		
PN 16 (DN 50 ... 1200/2" ... 48")		N
Flange material and coating		
Carbon steel flanges ASTM A 105, 150 µm coating	⬟	1
Carbon steel flanges ASTM A 105, 300 µm coating		4
Liner material		
EPDM	⬟	2
NBR Hard Rubber	⬟	3
Transmitter		
Sensor for remote transmitter (Order transmitter separately)	⬟	A
MAG 6000 I, Aluminum, 18 ... 90 V DC, 115 ... 230 V AC	⬟	C
MAG 6000, Polyamid, 11 ... 30 V DC/11 ... 24 V AC	⬟	H
MAG 6000, Polyamid, 115 ... 230 V AC	⬟	J
MAG 5000, Polyamid, 11 ... 30 V DC/11 ... 24 V AC	⬟	K
MAG 5000, Polyamid, 115 ... 230 V AC	⬟	L
MAG 6000 CT, Polyamid, 115 ... 230 V AC		M

Selection and Ordering data		Article No.
Sensor SITRANS F M MAG 5100 W		7ME6520-
Hastelloy electrodes, carbon steel flanges, EU water markets and low flow applications		-2
Communication		
None	⬟	A
HART	⬟	B
PROFIBUS PA Profile 3 (only MAG 6000/MAG 6000 I)	⬟	F
PROFIBUS DP Profile 3 (only MAG 6000/MAG 6000 I)	⬟	G
Modbus RTU/RS 485 (only MAG 6000/MAG 6000 I)	⬟	E
FOUNDATION Fieldbus H1 (only MAG 6000/ MAG 6000 I)	⬟	J
Cable glands/terminal box		
Metric/Polyamid terminal box or 6000 I compact	⬟	1
½" NPT/Polyamid terminal box or 6000 I compact	⬟	2

⬟ We can offer shorter delivery times for configurations designated with the Quick Ship Symbol ⬟. For details see page 9/5 in the appendix.

© Siemens AG 2014

3

Selection and Ordering data	Order code
Additional information	
Please add **"-Z"** to Article No. and specify Order code(s) and plain text.	
Material certificate according to EN 10204-3.1	**C12**
Factory certificate according to EN 10204-2.2	**C14**
Factory certificate according to EN 10204-2.1	**C15**
FP2E marking (only France)	**C17**
Special calibration	
• 5-point calibration for DN 15 ... DN 200[1)]	**D01**
• 5-point calibration for DN 250 ... DN 600[1)]	**D02**
• 5-point calibration for DN 700 ... DN 1200[1)]	**D03**
• 10-point calibration for DN 15 ... DN 200[2)]	**D06**
• 10-point calibration for DN 250 ... DN 600[2)]	**D07**
• 10-point calibration for DN 700 ... DN 1200[2)]	**D08**
• Default (2 x 25 % and 2 x 90 %) match-pair calibration for DN 15 ... DN 200	**D11**
• Default (2 x 25 % and 2 x 90 %) match-pair calibration for DN 250 ... DN 600	**D12**
• Default (2 x 25 % and 2 x 90 %) match-pair calibration for DN 700 ... DN 1200	**D13**
• 5-point, matched-pair calibration for DN 15 ... DN 200[1)]	**D15**
• 5-point, matched-pair calibration for DN 250 ... DN 600[1)]	**D16**
• 5-point, matched-pair calibration for DN 700 ... DN 1200[1)]	**D17**
• 10-point, matched-pair calibration for DN 15 ... DN 200[2)]	**D18**
• 10-point, matched-pair calibration for DN 250 ... DN 600[2)]	**D19**
• 10-point, matched-pair calibration for DN 700 ... DN 1200[2)]	**D20**
Approval/Verification[3)] (MI-001 : DN 50 ... 300 (compact only), EN 1092-1 PN10 and PN16 flanges with MAG 6000 CT)[4)]	
• Without verification according to OIML R 49	**P10**
• MI-001 Q3/Q1 = 25	**P11**
• MI-001 Q3/Q1 = 63	**P12**
• MI-001 Q3/Q1 = 80	**P13**
• MI-001 Q3/Q1 = 160	**P16**
• MI-001 Q3/Q1 = 200	**P17**
• MI-001 Q3/Q1 = 250	**P18**
FM Fire Service Approval (with ANSI B16.5 Class 150 flanges)	
• DN 50, DN 80 and DN 100 (2", 3" and 4")	**P20**
• DN 150 and DN 200 (6" and 8")	**P21**
• DN 250 and DN 300 (10" and 12")	**P22**
Tag name plate, stainless steel fixed with SS wire (add plain text)	**Y17**
Tag name plate, plastic (self-adhesive)	**Y18**
Customer-specific converter setup	**Y20**
Sensor cables wired (specify cable Article No.)	**Y40**
Sensor for remote transmitter's junction box potted to IP68 with wired cable (specify cable Article No.)	**Y41**
Other postproduction requirements (add desired text)	**Y99**

Selection and Ordering data	Order code
Additional Calibrations	
Accredited Siemens Flow Instruments matched pair Calibration acc. to ISO/IEC 17025:2005	**On request[5)]**
Customer-witnessed calibration Any of above calibration	**On request[5)]**

1) 20 %, 40 %, 60 %, 80 %, 100 % of factory Q_{max}

2) Ascending and descending at 20 %, 40 %, 60 %, 80 %, 100 % of factory Q_{max}

3) For more details and references of the ranges please see the tables on page 3/96.

4) For remote version submit Product Variation Request.

5) Ordering On request as dedicated information from the customer on the individual sensors is required. Please fill in the calibration form found on http://pi.khe.siemens.de/index.aspx?Nr=17460 and send together with the order. (Size dependent restriction on maximum flow rates may apply)

Operating instructions for SITRANS F M MAG 5100 W

Description	Article No.
• English	**A5E03063678**
• German	**A5E03376527**
• Spanish	**A5E00376529**
• French	**A5E03376521**
• Chinese	**A5E03376501**

This device is shipped with a Quick Start guide and a CD containing further SITRANS F literature.

All literature is also available for free at:
http://www.siemens.com/flowdocumentation

Accessories

Description	Article No.	
Potting kit for terminal box of flow sensors for IP68/NEMA 6P ⬟	**FDK:085U0220**	

⬟ We can offer shorter delivery times for configurations designated with the Quick Ship Symbol ⬟. For details see page 9/5 in the appendix.

MAG 5000/6000 transmitters and sensors are packed in separate boxes, the final assembly takes place during installation at the customer's place. MAG 6000 I transmitters and sensors are delivered compact mounted from factory.
Communication module will be pre-mounted in the transmitter.

Please use online Product selector to get latest updates.

Product selector link:
www.pia-selector.automation.siemens.com

© Siemens AG 2014

Flow sensor MAG 5100 W

Selection and Ordering data	Order code
Additional information	
Please add **"-Z"** to Article No. and specify Order code(s) and plain text.	
Material certificate according to EN 10204-3.1	**C12**[1]
Factory certificate according to EN 10204-2.2	**C14**
Factory certificate according to EN 10204-2.1	**C15**
Special calibration	
• 5-point calibration for DN 15 ... DN 200[2]	**D01**
• 5-point calibration for DN 250 ... DN 600[2]	**D02**
• 5-point calibration for DN 700 ... DN 1200[2]	**D03**
• 10-point calibration for DN 15 ... DN 200[3]	**D06**
• 10-point calibration for DN 250 ... DN 600[3]	**D07**
• 10-point calibration for DN 700 ... DN 1200[3]	**D08**
• Default (2 x 25 % and 2 x 90 %) match-pair calibration for DN 15 ... DN 200	**D11**
• Default (2 x 25 % and 2 x 90 %) match-pair calibration for DN 250 ... DN 600	**D12**
• Default (2 x 25 % and 2 x 90 %) match-pair calibration for DN 700 ... DN 1200	**D13**
• 5-point, matched-pair calibration for DN 15 ... DN 200[2]	**D15**
• 5-point, matched-pair calibration for DN 250 ... DN 600[2]	**D16**
• 5-point, matched-pair calibration for DN 700 ... DN 1200[2]	**D17**
• 10-point, matched-pair calibration for DN 15 ... DN 200[3]	**D18**
• 10-point, matched-pair calibration for DN 250 ... DN 600[3]	**D19**
• 10-point, matched-pair calibration for DN 700 ... DN 1200[3]	**D20**
Tag name plate, stainless steel fixed with SS wire	**Y17**
Tag name plate, plastic (self-adhesive)	**Y18**
Customer-specific converter setup	**Y20**
Sensor cables wired (specify cable Article No.)	**Y40**
Sensor for remote transmitter's junction box potted to IP68 with wired cable (specify cable Article No.)	**Y41**
Other postproduction requirements (add desired text)	**Y99**

[1] Under preparation

[2] 20 %, 40 %, 60 %, 80 %, 100 % of factory Q_{max}

[3] Ascending and descending at 20 %, 40 %, 60 %, 80 %, 100 % of factory Q_{max}

⬟ We can offer shorter delivery times for configurations designated with the Quick Ship Symbol ⬟. For details see page 9/5 in the appendix.

Operating instructions for SITRANS F M MAG 5100 W

Description	Article No.
• German	**A5E03376527**
• English	**A5E03063678**
• French	**A5E03376521**
• Spanish	**A5E03376529**
• Chinese	**A5E03376501**

This device is shipped with a Quick Start guide and a CD containing further SITRANS F literature.

All literature is also available for free at:
http://www.siemens.com/flowdocumentation

Accessories

Description	Article No.	
Potting kit for terminal box of flow sensors for IP68/NEMA 6P ⬟	**FDK:085U0220**	

⬟ We can offer shorter delivery times for configurations designated with the Quick Ship Symbol ⬟. For details see page 9/5 in the appendix.

MAG 5000/6000 transmitters and sensors are packed in separate boxes, the final assembly takes place during installation at the customer's place.
Communication module will be pre-mounted in the transmitter.
Please use online Product selector to get latest updates.
Product selector link: www.pia-selector.automation.siemens.com

© Siemens AG 2014

Dimensional drawings

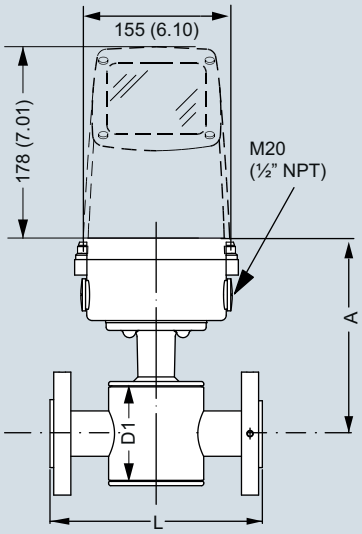

7ME6520: DN 15 ... 40 (½" ... 1½")

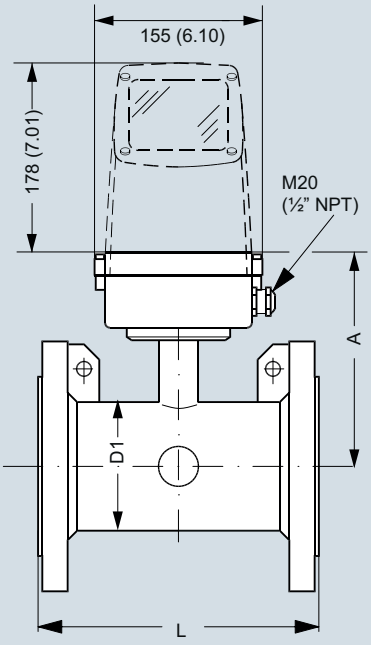

7ME6520: DN 50 ... 300 (2" ... 12")

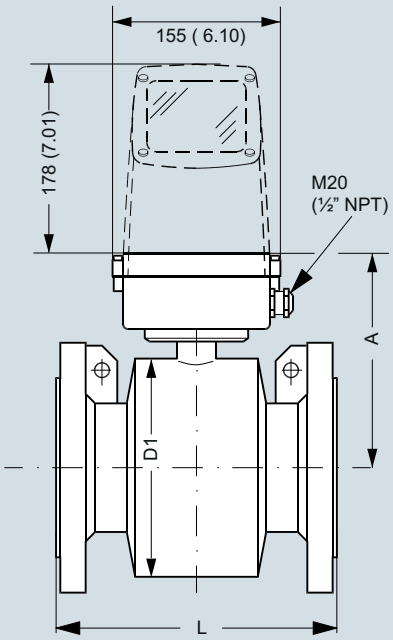

7ME6520: DN 350 ... 1200 (14" ... 48")
7ME6580: DN 25 ... 2000 (1" ... 78")

7ME6520 NBR or EPDM liner						7ME6580 Ebonite liner					
Nominal size		A		D1		A		D1		L	
[mm]	[inch]	[mm]	[inch]	[mm]	[inch]	[mm]	[inch]	[mm]	[inch]	[mm]	[inch]
15	½	177	7.0	77	3.0	-	-	-	-	200	7.9
25	1	187	7.4	96	3.8	187	7.4	104	4.09	200	7.9
40	1½	202	8.0	127	5.0	197	7.8	124	4.88	200	7.9
50	2	188	7.4	76	3.0	205	8.1	139	5.47	200	7.9
65	2½	194	7.6	89	3.5	212	8.3	154	6.06	200	7.9
80	3	200	7.9	102	4.0	222	8.7	174	6.85	200	7.9
100	4	207	8.1	114	4.5	242	9.5	214	8.43	250	9.8
125	5	217	8.5	140	5.5	255	10.0	239	9.41	250	9.8
150	6	232	9.1	168	6.6	276	10.9	282	11.1	300	11.8
200	8	257	10.1	219	8.6	304	12.0	338	13.31	350	13.8
250	10	284	11.2	273	10.8	332	13.1	393	15.47	450	17.7
300	12	310	12.2	324	12.8	357	14.1	444	17.48	500	19.7
350	14	382	15.0	451	17.8	362	14.3	451	17.76	550	21.7
400	16	407	16.0	502	19.8	387	15.2	502	19.76	600	23.6
450	18	438	17.2	563	22.2	418	16.5	563	22.16	600	23.6
500	20	463	18.2	614	24.2	443	17.4	614	24.17	600	23.6
600	24	514	20.2	715	28.2	494	19.4	715	28.15	600	23.6
700	28	564	22.2	816	32.1	544	21.4	816	32.13	700	27.6
750	30	591	23.3	869	34.2	571	22.5	869	34.21	750	29.5
800	32	616	24.3	927	36.5	606	23.9	927	36.5	800	31.5
900	36	663	26.1	1032	40.6	653	25.7	1032	40.63	900	35.4
1000	40	714	28.1	1136	44.7	704	27.7	1136	44.72	1000	39.4
	42	714	28.1	1136	44.7	704	27.7	1136	44.72	1000	39.4
	44	765	30.1	1238	48.7	755	29.7	1238	48.74	1100	43.3
1200	48	820	32.3	1348	53.1	810	31.9	1348	53.07	1200	47.2
1400	54	-	-	-	-	925	36.4	1574	65.94	1400	55.1
1500	60	-	-	-	-	972	38.2	1672	65.83	1500	59.1
1600	66	-	-	-	-	1025	40.4	1774	75.39	1600	63
1800	72	-	-	-	-	1123	44.2	1974	77.72	1800	70.9
2000	78	-	-	-	-	1223	48.1	2174	85.59	2000	78.7

- not available

© Siemens AG 2014

Flow sensor MAG 5100 W

MAG 5100 W/6000 I Compact

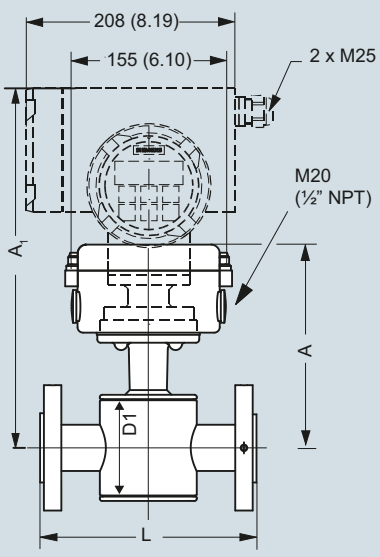

7ME6520: DN 15 ... 40 (½" ... 1½")

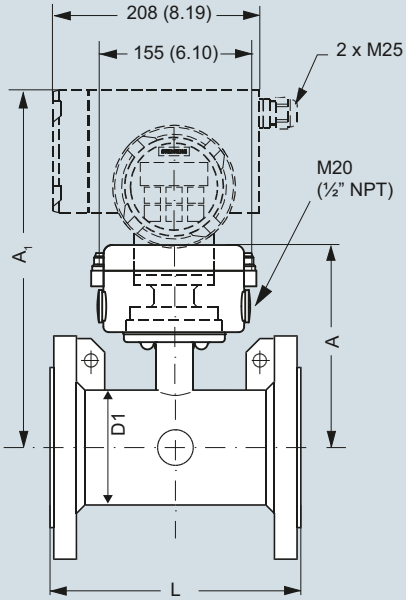

7ME6520: DN 50 ... 300 (2" ... 12")

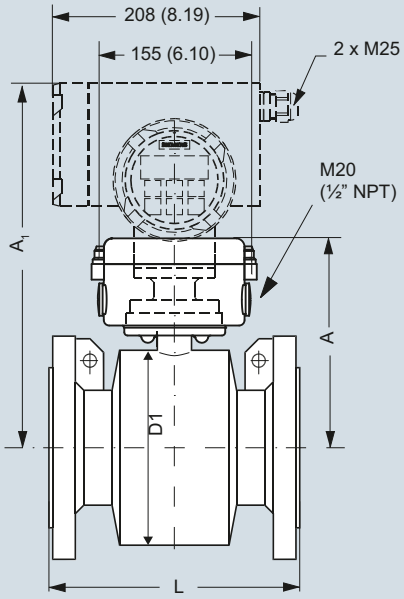

7ME6520: DN 350 ... 2000 (14" ... 78")
7ME6580: DN 25 ... 2000 (1" ... 78")

		7ME6520 NBR or EPDM liner						7ME6580 Ebonite liner							
Nominal size		A		A1		D1		A		A1		D1		L	
[mm]	[inch]	[mm]	[inch]	[mm]	[inch]	[mm]	[inch]	[mm]	[inch]	[mm]	[inch]	[mm]	[inch]	[mm]	[inch]
15	½	177	7.0	331	13.0	77	3.0	187	7.4	-	-	-	-	200	7.9
25	1	187	7.4	341	13.4	96	3.8	187	7.4	341	13.4	104	4.09	200	7.9
40	1½	202	8.0	356	14.0	127	5.0	197	7.8	351	13.8	124	4.88	200	7.9
50	2	188	7.4	342	13.5	76	3.0	205	8.1	359	14.1	139	5.47	200	7.9
65	2½	194	7.6	348	13.7	89	3.5	212	8.3	366	14.4	154	6.06	200	7.9
80	3	200	7.9	354	14.0	102	4.0	222	8.7	376	14.8	174	6.85	200	7.9
100	4	207	8.1	361	14.2	114	4.5	242	9.5	396	15.6	214	8.43	250	9.8
125	5	217	8.5	371	14.6	140	5.5	255	10.0	409	16.1	239	9.41	250	9.8
150	6	232	9.1	386	15.2	168	6.6	276	10.9	430	16.9	282	11.1	300	11.8
200	8	257	10.1	411	16.2	219	8.6	304	12.0	458	18.0	338	13.31	350	13.8
250	10	284	11.2	438	17.2	273	10.8	332	13.1	486	19.1	393	15.47	450	17.7
300	12	310	12.2	464	18.3	324	12.8	357	14.1	511	20.1	444	17.48	500	19.7
350	14	382	15.0	536	21.1	451	17.8	362	14.3	516	20.3	451	17.76	550	21.7
400	16	407	16.0	561	22.1	502	19.8	387	15.2	541	21.3	502	19.76	600	23.6
450	18	438	17.2	592	23.3	563	22.2	418	16.5	572	22.5	563	22.16	600	23.6
500	20	463	18.2	617	24.3	614	24.2	443	17.4	597	23.5	614	24.17	600	23.6
600	24	514	20.2	668	26.3	715	28.2	494	19.4	648	25.5	715	28.15	600	23.6
700	28	564	22.2	718	28.3	816	32.1	544	21.4	698	27.5	816	32.13	700	27.6
750	30	591	23.3	745	29.3	869	34.2	571	22.5	725	28.5	869	34.21	750	29.5
800	32	616	24.3	770	30.3	927	36.5	606	23.9	760	29.9	927	36.5	800	31.5
900	36	663	26.1	817	32.2	1032	40.6	653	25.7	807	31.8	1032	40.63	900	35.4
1000	40	714	28.1	868	34.2	1136	44.7	704	27.7	858	33.8	1136	44.72	1000	39.4
	42	714	28.1	868	34.2	1136	44.7	704	27.7	858	33.8	1136	44.72	1000	39.4
	44	765	30.1	919	36.2	1238	48.7	755	29.7	904	35.6	1238	48.74	1100	43.3
1200	48	820	32.3	974	38.3	1348	53.1	810	31.9	964	38.0	1348	53.07	1200	47.2
1400	54	-	-	-	-	-	-	925	36.4	1079	42.5	1574	61.97	1400	55.1
1500	60	-	-	-	-	-	-	972	38.2	1126	44.3	1672	65.83	1500	59.1
1600	66	-	-	-	-	-	-	1025	40.4	1179	46.4	1774	69.84	1600	63.0
1800	72	-	-	-	-	-	-	1123	44.2	1277	50.3	1974	77.72	1800	70.9
2000	78	-	-	-	-	-	-	1223	48.1	1377	54.2	2174	85.59	2000	78.7

- not available

© Siemens AG 2014

Weight

		7ME6520 NBR or EPDM liner										7ME6580 Ebonite liner	
Nominal size		**PN 10**		**PN 16**		**PN 40**		**Class 150/AWWA**		**AS**		**PN 16**	
[mm]	**[inch]**	**[kg]**	**[lb]**	**[kg]**	**[lb]**	**[kg]**	**[lb]**	**[kg]**	**[lb]**	**[kg]**	**[lb]**	**[kg]**	**[lb]**
15	½	-	-	-	-	4	9	4	9	4	9	5	11
25	1	-	-	-	-	6	12	5	11	4	9	5	11
40	1½	-	-	-	-	8	18	7	15	7	15	8	17
50	2	-	-	9	20	-	-	8	20	9	20	9	20
65	2½	-	-	10.7	24	-	-	11	24	10.7	24	11	24
80	3	-	-	11.6	26	-	-	13	28	11.6	26	12	26
100	4	-	-	15.2	33	-	-	19	41	15.2	33	16	35
125	5	-	-	20.4	45	-	-	24	52	-	-	19	42
150	6	-	-	26	57	-	-	29	64	26	57	27	60
200	8	48	106	48	106	-	-	56	124	48	106	40	88
250	10	64	141	69	152	-	-	79	174	69	152	60	132
300	12	76	167	86	189	-	-	110	243	86	189	80	176
350	14	104	229	125	274	-	-	139	307	115	254	110	242
400	16	119	263	143	314	-	-	159	351	125	277	125	275
450	18	136	299	173	381	-	-	182	400	141	311	175	385
500	20	163	359	223	491	-	-	225	495	189	418	200	440
600	24	236	519	338	744	-	-	320	704	301	664	287	633
700	28	270	595	314	692	-	-	273	602	320	704	330	728
750	30	-	-	-	-	-	-	329	725	-	-	360	794
800	32	346	763	396	873	-	-	365	804	428	944	450	992
900	36	432	951	474	1043	-	-	495	1089	619	1362	530	1168
1000	40	513	1130	600	1321	-	-	583	1282	636	1399	660	1455
	42	-	-	-	-	-	-	687	1512	-	-	-	-
	44	-	-	-	-	-	-	763	1680	-	-	1140	2513
1200	48	643	1415	885	1948	-	-	861	1896	813	1789	1180	2601
1400	54	1592	3510	-	-	-	-	-	-	-	-	1600	3528
1500	60	-	-	-	-	-	-	-	-	-	-	2460	5423
1600	66	2110	4652	-	-	-	-	-	-	-	-	2525	5566
1800	72	2560	5644	-	-	-	-	-	-	-	-	2930	6460
2000	78	3640	8025	-	-	-	-	-	-	-	-	3665	8080

- not available

With transmitter MAG 5000 and MAG 6000 compact, weight is increased by approximately 0.8 kg (1.8 lb), with MAG 6000 I, weight is increased by 5.5 kg (12.1 lb).

Panel Materials for CP-p00

CONTINUOUS HINGE WITH CLAMPS, TYPE 12

INDUSTRY STANDARDS

UL 508A Listed; Type 12, 13; File No. E61997
cUL Listed per CSA C22.2 No. 94; Type 12, 13; File No. E61997

NEMA/EEMAC Type 12 and 13
CSA, File No. 42186: Type 12
IEC 60529, IP65

APPLICATION

For applications requiring a bright white interior to increase control visibility, this enclosure includes a padlocking hasp and staple for security and screw-down clamps for secure closure.

SPECIFICATIONS

- Enclosure bodies are 14 or 16 gauge steel. Doors are 14 gauge steel.
- Seams continuously welded and ground smooth
- External wall-mounting brackets
- Formed external return flanges around all sides of enclosure opening
- Screw-down door clamps
- Removable heavy-gauge continuous hinge pin
- Hasp and staple for padlocking
- Data pocket is high-impact thermoplastic
- Collar studs provided for mounting optional panels
- Bonding provision on door

FINISH

White inside with ANSI 61 gray finish outside.

ACCESSORIES

See also Accessories.
Drip Shield Kit for Type 12 Enclosures
Electric Heater
Fast-Operating Clamp Assembly
Compact Cooling Fans
Steel and Stainless Steel Window Kits

MODIFICATION AND CUSTOMIZATION

Hoffman excels at modifying and customizing products to your specifications. Contact your local Hoffman sales office or distributor for complete information.

BULLETIN: A12

Standard Product

Catalog Number	AxBxC in./mm	Body Gauge	Panel	Conductive Panel	Panel Size D x E in./mm	F in./mm	Number of Clamps	Data Pocket
A122406LP	12.00 x 24.00 x 6.00 305 x 610 x 152	16	A12P24	A12P24G	9.00 x 21.00 229 x 533	3.00 76	2	Small
A161206LP	16.00 x 12.00 x 6.00 406 x 305 x 152	16	A16P12	A16P12G	13.00 x 9.00 330 x 229	1.25 32	2	Small
A161606LP	16.00 x 16.00 x 6.00 406 x 406 x 152	16	A16P16	A16P16G	13.00 x 13.00 330 x 330	3.00 76	2	Small
A162006LP	16.00 x 20.00 x 6.00 406 x 508 x 152	16	A20P16	A20P16G	17.00 x 13.00 432 x 330	3.00 76	2	Small
A201206LP	20.00 x 12.00 x 6.00 508 x 305 x 152	16	A20P12	A20P12G	17.00 x 9.00 432 x 229	1.25 32	2	Small
A201606LP	20.00 x 16.00 x 6.00 508 x 406 x 152	16	A20P16	A20P16G	17.00 x 13.00 432 x 330	3.00 76	2	Small
A202006LP	20.00 x 20.00 x 6.00 508 x 508 x 152	16	A20P20	A20P20G	17.00 x 17.00 432 x 432	3.00 76	2	Small
A202406LP	20.00 x 24.00 x 6.00 508 x 610 x 152	16	A24P20	A24P20G	21.00 x 17.00 533 x 432	3.00 76	2	Small
A241206LP	24.00 x 12.00 x 6.00 610 x 305 x 152	16	A12P24	A12P24G	9.00 x 21.00 229 x 533	1.25 32	2	Small
A241606LP	24.00 x 16.00 x 6.00 610 x 406 x 152	16	A24P16	A24P16G	21.00 x 13.00 533 x 330	3.00 76	2	Small
A242006LP	24.00 x 20.00 x 6.00 610 x 508 x 152	16	A24P20	A24P20G	21.00 x 17.00 533 x 432	3.00 76	2	Small
A242406LP	24.00 x 24.00 x 6.00 610 x 610 x 152	16	A24P24	A24P24G	21.00 x 21.00 533 x 533	3.00 76	2	Small
A301606LP	30.00 x 16.00 x 6.00 762 x 406 x 152	14	A30P16	A30P16G	27.00 x 13.00 686 x 330	3.00 76	2	Small
A302006LP	30.00 x 20.00 x 6.00 762 x 508 x 152	14	A30P20	A30P20G	27.00 x 17.00 686 x 432	3.00 76	2	Small
A302406LP	30.00 x 24.00 x 6.00 762 x 610 x 152	14	A30P24	A30P24G	27.00 x 21.00 686 x 533	3.00 76	2	Large
A362406LP	36.00 x 24.00 x 6.00 914 x 610 x 152	14	A36P24	A36P24G	33.00 x 21.00 838 x 533	3.00 76	2	Large
A363006LP	36.00 x 30.00 x 6.00 914 x 762 x 152	14	A36P30	A36P30G	33.00 x 27.00 838 x 686	3.00 76	2	Large
A122408LP	12.00 x 24.00 x 8.00 305 x 610 x 203	16	A12P24	A12P24G	9.00 x 21.00 229 x 533	3.00 76	2	Small
A161208LP	16.00 x 12.00 x 8.00 406 x 305 x 203	16	A16P12	A16P12G	13.00 x 9.00 330 x 229	1.25 32	2	Small
A161608LP	16.00 x 16.00 x 8.00 406 x 406 x 203	16	A16P16	A16P16G	13.00 x 13.00 330 x 330	3.00 76	2	Small

Catalog Number	AxBxC in./mm	Body Gauge	Panel	Conductive Panel	Panel Size D x E in./mm	F in./mm	Number of Clamps	Data Pocket
A201612LP	20.00 x 16.00 x 12.00 508 x 406 x 305	14	A20P16	A20P16G	17.00 x 13.00 432 x 330	3.00 76	2	Small
A242012LP	24.00 x 20.00 x 12.00 610 x 508 x 305	14	A24P20	A24P20G	21.00 x 17.00 533 x 432	3.00 76	2	Small
A242412LP	24.00 x 24.00 x 12.00 610 x 610 x 305	14	A24P24	A24P24G	21.00 x 21.00 533 x 533	3.00 76	2	Small
A302412LP	30.00 x 24.00 x 12.00 762 x 610 x 305	14	A30P24	A30P24G	27.00 x 21.00 686 x 533	3.00 76	2	Large
A303012LP	30.00 x 30.00 x 12.00 762 x 762 x 305	14	A30P30	A30P30G	27.00 x 27.00 686 x 686	3.00 76	2	Large
A362412LP	36.00 x 24.00 x 12.00 914 x 610 x 305	14	A36P24	A36P24G	33.00 x 21.00 838 x 533	3.00 76	2	Large
A363012LP	36.00 x 30.00 x 12.00 914 x 762 x 305	14	A36P30	A36P30G	33.00 x 27.00 838 x 686	3.00 76	2	Large
A363612LP	36.00 x 36.00 x 12.00 914 x 914 x 305	14	A36P36	A36P36G	33.00 x 33.00 838 x 838	3.00 76	2	Large
A423012LP	42.00 x 30.00 x 12.00 1067 x 762 x 305	14	A42P30	A42P30G	39.00 x 27.00 991 x 686	3.00 76	2	Small
A423612LP	42.00 x 36.00 x 12.00 1067 x 914 x 305	14	A42P36	A42P36G	39.00 x 33.00 991 x 838	3.00 76	2	Large
A483612LP	48.00 x 36.00 x 12.00 1219 x 914 x 305	14	A48P36	A48P36G	45.00 x 33.00 1143 x 838	3.00 76	3	Large
A603612LP	60.00 x 36.00 x 12.00 1524 x 914 x 305	14	A60P36	A60P36G	57.00 x 33.00 1448 x 838	3.00 76	3	Large
A723612LP	72.00 x 36.00 x 12.00 1829 x 914 x 305	14	A72P36	A72P36G	69.00 x 33.00 1753 x 838	3.00 76	3	Large
A242016LP	24.00 x 20.00 x 16.00 610 x 508 x 406	14	A24P20	A24P20G	21.00 x 17.00 533 x 432	3.00 76	2	Small
A242416LP	24.00 x 24.00 x 16.00 610 x 610 x 406	14	A24P24	A24P24G	21.00 x 21.00 533 x 533	3.00 76	2	Small
A302416LP	30.00 x 24.00 x 16.00 762 x 610 x 406	14	A30P24	A30P24G	27.00 x 21.00 686 x 533	3.00 76	2	Large
A363016LP	36.00 x 30.00 x 16.00 914 x 762 x 406	14	A36P30	A36P30G	33.00 x 27.00 838 x 686	3.00 76	2	Large
A423616LP	42.00 x 36.00 x 16.00 1067 x 914 x 406	14	A42P36	A42P36G	39.00 x 33.00 991 x 838	3.00 76	2	Large
A483616LP	48.00 x 36.00 x 16.00 1219 x 914 x 406	14	A48P36	A48P36G	45.00 x 33.00 1143 x 838	3.00 76	3	Large
A603616LP	60.00 x 36.00 x 16.00 1524 x 914 x 406	14	A60P36	A60P36G	57.00 x 33.00 1448 x 838	3.00 76	3	Large
A302420LP	30.00 x 24.00 x 20.00 762 x 610 x 508	14	A30P24	A30P24G	27.00 x 21.00 686 x 533	3.00 76	2	Large
A363020LP	36.00 x 30.00 x 20.00 914 x 762 x 508	14	A36P30	A36P30G	33.00 x 27.00 838 x 686	3.00 76	2	Large
A483620LP	48.00 x 36.00 x 20.00 1219 x 914 x 508	14	A48P36	A48P36G	45.00 x 33.00 1143 x 838	3.00 76	3	Large
A603620LP	60.00 x 36.00 x 20.00 1524 x 914 x 508	14	A60P36	A60P36G	57.00 x 33.00 1448 x 838	3.00 76	3	Large
A302424LP	30.00 x 24.00 x 24.00 762 x 610 x 610	14	A30P24	A30P24G	27.00 x 21.00 686 x 533	3.00 76	2	Large

Purchase panels separately. Optional stainless steel, conductive, composite and aluminum panels are available for most sizes.

Small Data Pocket is 6.00 in. x 6.00 in. Large Data Pocket is 12.00 in. x 12.00 in.

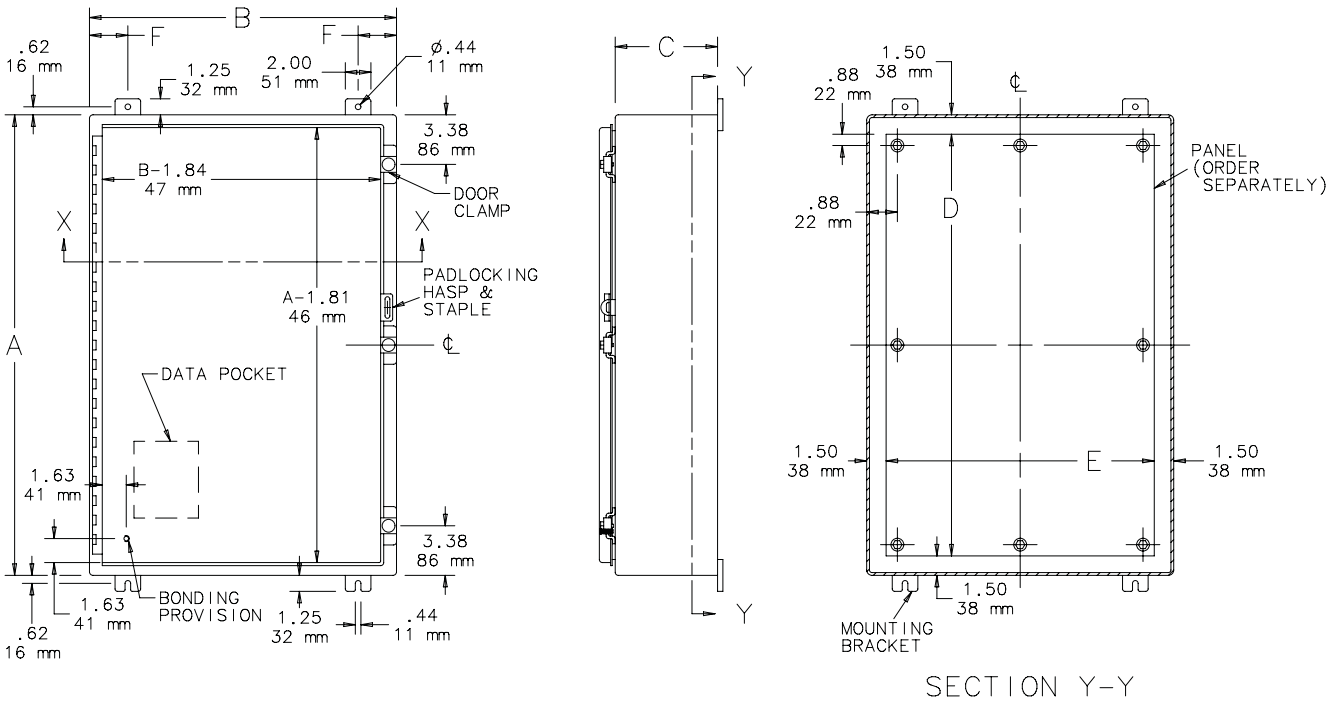
B
F
F
.62
16 mm
1.25
32 mm
2.00
51 mm
ø.44
11 mm
3.38
86 mm
B-1.84
47 mm
DOOR
CLAMP
X
X
PADLOCKING
HASP &
STAPLE
A-1.81
46 mm
A
DATA POCKET
1.63
41 mm
3.38
86 mm
1.63
41 mm
BONDING
PROVISION
1.25
32 mm
.44
11 mm
.62
16 mm
C
Y
Y
1.50
38 mm
.88
22 mm
PANEL
(ORDER
SEPARATELY)
.88
22 mm
D
1.50
38 mm
E
1.50
38 mm
1.50
38 mm
MOUNTING
BRACKET
SECTION Y-Y

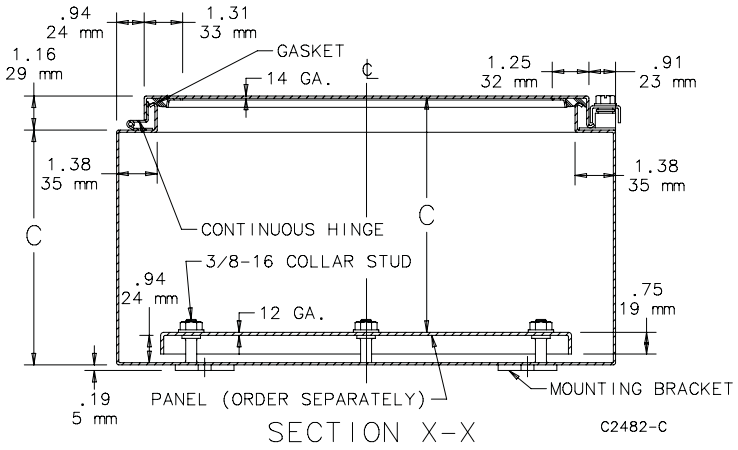
.94
24 mm
1.31
33 mm
1.16
29 mm
GASKET
14 GA.
1.25
32 mm
.91
23 mm
1.38
35 mm
1.38
35 mm
C
CONTINUOUS HINGE
C
3/8-16 COLLAR STUD
.94
24 mm
12 GA.
.75
19 mm
.19
5 mm
PANEL (ORDER SEPARATELY)
MOUNTING BRACKET
SECTION X-X
C2482-C

BOM #3

800T/H 30.5 mm Trigger Action E-Stops

Allen-Bradley

Product Summary

800T Type 4/13 Metal

Non-Illuminated
- 45 mm plastic head
- 60 mm plastic head
- 63 mm metal head

Illuminated
- 45 mm plastic head
- 60 mm plastic head

Key Release
- 45 mm plastic head

800H Type 4/4X/13 Plastic

Non-Illuminated
- 45 mm plastic head
- 60 mm plastic head

Illuminated
- 45 mm plastic head
- 60 mm plastic head

30.5 mm E-Stops in a state-of-the-art, tamper-resistant design

Time-Tested, Industry Proven

The Allen-Bradley® 800T/H push button product lines are designed and constructed to perform consistently in the most demanding industrial environments. This legacy of leadership continues with the introduction of the innovative 800T/H Trigger Action E-Stop devices.

Global Acceptance

Trigger action functionality provided in a 30.5 mm form factor delivers E-Stop operators that meet global requirements and are more than up to the task for installation in heavy duty applications. The twist release design conforms to functional safety guidelines where intentional action is required to reset the E-Stop device.

Tamper Resistance

Tamper resistance is provided by front-of-panel mounting. The mounting nut installs from back of panel, and is inaccessible when the control cabinet door is closed during normal machine operation. Additionally, the 800T/H Trigger Action E-Stop mushroom caps are factory installed and non-removable, further increasing tamper resistance.

State-of-the-Art Illumination

LED illumination is standard for illuminated devices, using state-of-the-art super bright LED technology. Full voltage or transformer type input is available. Full voltage devices employ the new Universal LED technology, accepting a wide range of 12...130V AC/DC input supply voltage.

Trigger Action E-Stop Units, Non-Illuminated

Trigger Action E-Stop Units, Illuminated

Trigger Action E-Stop Units, Key Release

Features and Benefits

Trigger Action Function

- Contacts can't be teased without latching of operator
- Complies with EN ISO 13850 and EN 60947-5-5
- Positive opening with direct drive contact blocks
- Allows use of standard contact blocks such as 800T-XA (1-NO, 1-NC)

Fixed Mushroom Cap

- Safety red color
- 45 mm, 60 mm and 63 mm (metal) options
- Non-removable for tamper resistance
- Integral "E-STOP" legend available as an option

Twist Release Function

- Conforms to functional safety guidelines
- Intentional action required for E-Stop resetting

Front-of-Panel Mounting

- Operator installs from front of panel and is secured with back-of-panel mounting nut
- E-Stop operator cannot be tampered with during normal machine operation with control cabinet closed

Yellow Bushing

- 800H bushing molded from yellow plastic material further enhances compliance for yellow background of installations

Reliable Contact Block Latching

- Tool-less installation of latch mechanism – snaps onto operator
- Contact block mounting screws secure latch mechanism to operator – latch cannot be removed while contact blocks are installed

Trigger Action E-Stop Units, Non-Illuminated

- 2-position
- Twist Release
- Red mushroom head

Add Required 5/5 NO/NC contacts

Head Type	Contact Configuration	Type 4/13 Metal Catalog Number ⌗	Type 4/4X/13 Plastic Catalog Number ⌗
45 mm Plastic	No Contacts	800T-TFXT6	800H-TFRXT6
	1-NO, 1-NC	800T-TFXT6A	800H-TFRXT6A
	1-SMCB ↗	800TC-TFXT6D4S	800HC-TFRXT6D4S
60 mm Plastic ✪	No Contacts	800T-TFXJT6	800H-TFRXJT6
	1-NO, 1-NC	800T-TFXJT6A	800H-TFRXJT6A
	1-SMCB ↗	800TC-TFXJT6D4S	800HC-TFRXJT6D4S
63 mm Anodized Aluminum ✧	No Contacts	800T-TFXLT6	–
	1-NO, 1-NC	800T-TFXLT6A	–
	1-SMCB ↗	800TC-TFXLT6D4S	–

Trigger Action E-Stop Units, Illuminated

- 2-position
- Twist Release
- Red mushroom head
- LED illumination

Head Type	Contact Configuration	Type	Voltage	Type 4/13 Metal Catalog Number ⌗	Type 4/4X/13 Plastic Catalog Number ⌗
45 mm Plastic	No Contacts	Operator Only		800T-TFXTS00R	800H-TFRXTS00R
	1-NO, 1-NC	Universal	12...130V AC/DC	800T-TFXTQH2RA	800H-TFRXTQH2RA
	1-SMCB ↗			800TC-TFXTQH2RD4S	800HC-TFRXTQH2RD4S
	1-NO, 1-NC	Transformer	120V AC	800T-TFXTPH16RA	800H-TFRXTPH16RA
	1-SMCB ↗			800TC-TFXTPH16RD4S	800HC-TFRXTPH16RD4S
60 mm Plastic ✪	No Contacts	Operator Only		800T-TFXJTS00R	800H-TFRXJTS00R
	1-NO, 1-NC	Universal	12...130V AC/DC	800T-TFXJTQH2RA	800H-TFRXJTQH2RA
	1-SMCB ↗			800TC-TFXJTQH2RD4S	800HC-TFRXJTQH2RD4S
	1-NO, 1-NC	Transformer	120V AC	800T-TFXJTPH16RA	800H-TFRXJTPH16RA
	1-SMCB ↗			800TC-TFXJTPH16RD4S	800HC-TFRXJTPH16RD4S

Trigger Action E-Stop Units, Key Release

- 2-position
- Familiar DO18 key
- Red mushroom head

Head Type	Contact Configuration	Type 4/13 Metal Catalog Number ⌗
45 mm Plastic	No Contacts	800T-TFXK6
	1-NO, 1-NC	800T-TFXK6A
	1-SMCB ↗	800TC-TFXK6D4S

⌗ For finger-safe contact block terminals, order 800TC or 800HC
✪ To order a device with "E-STOP" printed on the cap add the letter "E" after "J"; for example: 800T-TFXJET6
✧ To order a device with "E-STOP" engraved on the cap add the letter "E" after "L"; for example: 800T-TFXLET6
↗ Self-Monitoring Contact Block

BOM #6

Product: 1492-REC15G

Description: 1492 DIN Rail Receptacle

Representative Photo Only
(actual product may vary based on configuration selections)

DIN Rail Receptacle	
Current Rating	15A
Options	Ground Fault Current Interrupt

CERTIFICATIONS AND APPROVALS	
cULus	UL 508A (file# E54866)
For UL Certifications Directory:	http://database.ul.com/cgi-bin/XYV/template/LISEXT/1FRAME/index.htm

SDN-P DIN Rail Series

The SDN DIN Rail power supplies provide industry leading performance. Sag Immunity, transient suppression and noise tolerant, the SDN series ensures compatibility in demanding applications. Power factor correction to meet European directives, hazardous location approvals and optional redundant accessories allow the SDN series to be used in a wide variety of applications. Wide operation temperature range, high tolerance to shock and vibration and reliable design make the SDN series the preferred choice of users.

E61379 E137632 E234790

Applications

- Industrial/Machine Control
- Process Control
- Conveying Equipment
- Material Handling
- Vending Machines
- Packaging Equipment
- DeviceNet™
- Amusement Park Equipment
- Semiconductor Fabrication Equipment

Features

- Power Factor Correction (per EN61000-3-2)
- Auto Select 115/230 Vac, 50/60 Hz Input
- Improved metal mounting clip
- DC OK Signal
- Adjustable Voltage
- Parallel Capability standard on all units
- Industrial grade design
  - -10°C to 60°C operation without derating. Indefinite short circuit, overvoltage and overtemperature protection.
  - Powers high inrush loads without shutdown or foldback
  - Rugged metal case and DIN connector
- Narrow width on rail for space critical applications
- User-friendly front panel
  - Large, rugged, accessible, multiple connection screw terminations
  - Easy installation
- 12 Vdc and 48 Vdc single phase models available
- Highly efficient >90% switching technology
- High MTBF and reliability

Accessories

- Chassis Mount Bracket (SDN-PMBRK2)

Certifications and Compliances *

All Models

- c UL us Listed, Ind. Control Equipment, E61379
  - UL 508, CSA C22.2 No. 107.1
- c UL us UL Recognized Component, ITE, E137632
  - UL 60950-1/CSA C22.2 No. 60950-1, 2nd Edition
- c UL us UL Recognized Component, Haz. Loc., E234790
  - ISA 12.12.01, CSA C22.2 No. 213
  - Class I, Division 2, Groups A, B, C, D
- CE - Low Voltage Directive
  - IEC/EN60950-1, 2nd Edition
- Sag Immunity: SEMI F47
- RoHS Compliant

Models SDN 2.5-24-100P, SDN 4-24-100LP

- Class 2 per UL 1310, CSA C22.2 No. 223

Models SDN 2.5-24-100P, SDN 4-24-100LP, SDN 5-24-100P, SDN 10-24-100P

- Ex ATEX Directive
  - EN50021, Ex II 3 G, Ex nC IIC Gc

Related Products

- SDP™ Series
- SCP Series
- SCL Series
- SDU UPS

* Refer to user manual for installation requirements when used in hazardous locations.

SDN-P Specifications (Single Phase), 24 Vdc Output

Description	Catalog Number			
	SDN 2.5–24–100P	SDN 4–24–100LP	SDN 5–24–100P	SDN 10–24–100P
Input				
Nominal Voltage	115/230 Vac, Auto select			
–AC Range	85-264 Vac	85-132/176-264 Vac		
–DC Range [1]	90 - 375 Vdc	210 - 375 Vdc		
–Frequency	47 - 63 Hz			
Nominal Current [2]	1.3 / 0.7 A	2.1 / 1.0 A	2.2 / 1.0 A	5 / 2 A typ.
–Inrush current max.	typ. < 25 A	typ. < 20 A		typ. < 40 A
Efficiency (Losses [3])	> 87.5% typ. (8.6 W)	> 88% typ. (13.1 W)	> 88% typ. (16.4 W)	> 88% typ. (32.7 W)
Power Factor Correction	Units Fulfill EN61000-3-2			
Output				
Nominal Voltage	24 Vdc (22.5 - 28.5 Vdc adj.)	24 Vdc (22.5 - 28.5 Vdc adj.)	24 Vdc (22.5 - 28.5 Vdc adj.)	
–Tolerance	< ±2% overall (combination Line, load, time and temperature related changes)			
–Ripple [4]	< 50 mVpp			
Overvoltage Protection	< 33 Vdc	< 27 Vdc	< 33 Vdc	
Nominal Current	2.5 A (60 W)	3.8 A (92 W)	5 A (120 W)	10 A (240 W)
–Current Limit	Fold Forward (Current rises, voltage drops to maintain constant power during overload up to max peak current)			
Holdup Time [5]	> 20 ms @ full load			
Parallel Operation	Single or Parallel use is selectable via Front Panel Switch (SDN 2.5, 4 should not be used in parallel as Class 2 rating would be violated.)			
General				
EMC: –Emissions	EN61000-6-3, -4; Class B EN55011, EN55022 Radiated and Conducted including Annex A. EN61000-3-2			
–Immunity	EN61000-6-1, -2; EN61000-4-2 Level 4, EN61000-4-3 Level 3; EN61000-4-6 Level 3; EN61000-4-4 Level 4 input and Level 3 output; EN61000-4-5 Isolation Class 4, EN61000-4-11;			
Temperature	Storage: -25°C...+85°C Operation. -10°-60°C full power with operation to 70°C possible with a linear derating to half power from 60°C to 70°C (Convection cooling, no forced air required). Operation up to 50% load permissible with sideways or front side up mounting orientation.			
Humidity	The relative humidity is < 90% RH, noncondensing; IEC 68-2-2, 68-2-3.			
MTBF:	> 820,000 hours	> 640,000 hours		> 600,000 hours
– Standard	Bellcore Issue 6 Method 1 Case 3 @ 40°C			
Warranty	5 year limited warranty			
General Protection/Safety	Protected against continuous short-circuit, overload, open-circuit. Protection Class 1 (IEC536), degree of protection IP20 (IEC 529) Safe low voltage: SELV (acc. EN60950)			
Status Indicators	Green LED and DC OK signal (N.O. Solid State Contact rated 200 mA / 60 Vdc)			
Installation				
Fusing –Input	Internally fused. External 10 A slow acting fusing for the input is recommended to protect input wiring.			
–Output	Outputs are capable of providing high currents for short periods of time for inductive load startup or switching. Fusing may be required for wire/loads if 2x Nominal O/P current rating cannot be tolerated. Continuous current overload allows for reliable fuse tripping.			
Mounting	Simple snap-on system for DIN Rail TS35/7.5 or TS35/15 or chassis-mounted (optional screw mounting set SDN-PMBRK2 required).			
Connections	Input: IP20-rated screw terminals, connector size range: 16-10 AWG (1.5-6 mm²) for solid conductors. 16-12 AWG (0.5-4 mm²) for flexible conductors. Output: Two connectors per output, connector size range: 16-10 AWG (1.5 - 6 mm²) for solid conductors.			
Case	Fully enclosed metal housing with fine ventilation grid to keep out small parts.			
–Free Space	25 mm above and below, 25 mm left and right, 10 mm in front		25 mm above and below, 25 mm left and right, 15 mm in front	70 mm above and below, 25 mm left and right, 15 mm in front
H x W x D inches (mm)	4.88. x 1.97 x 4.55 (124.0 x 50.0 x 116.0)	4.88 x 2.56 x 4.55 (124.0 x 65.0 x 116.0)		4.88 x 3.26 x 4.55 (124.0 x 83.0 x 116.0)
Weight lbs (kg)	1.6 (.73)	2.4 (1.10)		3.3 (1.50)

1. Not UL listed for DC input.
2. Input current ratings are conservatively specified with low input, worst case efficiency and power factor.
3. Losses are heat dissipation in watts at full load, nominal input line.
4. Ripple/noise is stated as typical values when measured with a 20 MHz, bandwidth scope and 50 Ohm resistor.
5. Full load, 100 Vac Input @ T_{amb} = +25°C

Contact **Technical Services** at **(800) 377-4384** with any questions.
Visit our website at www.solahd.com.

SDN-P Series Dimensions

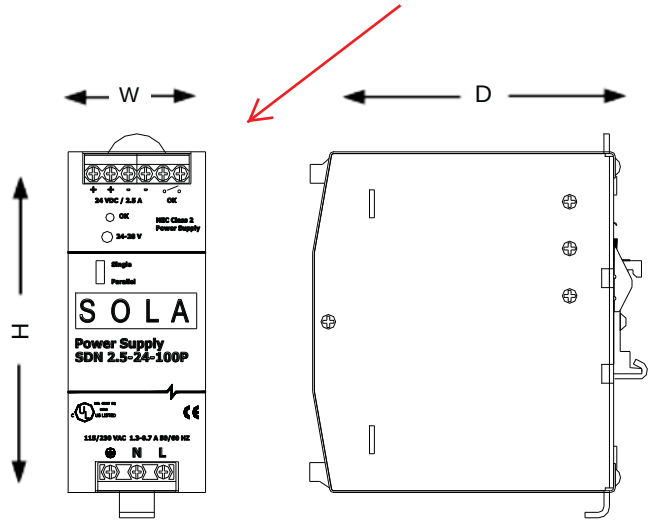

Catalog Number	Dimensions – inches (mm)		
	H	W	D
12 Vdc			
SDN 9–12–100P	4.88 (124.0)	2.56 (65.0)	4.55 (116.0)
SDN 16–12–100P	4.88 (124.0)	3.23 (83.0)	4.55 (116.0)
24 Vdc			
SDN 2.5–24–100P	4.88 (124.0)	1.97 (50.0)	4.55 (116.0)
SDN 4–24–100LP	4.88 (124.0)	2.56 (65.0)	4.55 (116.0)
SDN 5–24–100P	4.88 (124.0)	2.56 (65.0)	4.55 (116.0)
SDN 10–24–100P	4.88 (124.0)	3.26 (83.0)	4.55 (116.0)
48 Vdc			
SDN 5–48–100P	4.88 (124.0)	3.23 (83.0)	4.55 (116.0)

SDN-P Series Mounting

DIN Rail Mounting

Snap on the DIN Rail:

1. Tilt unit slightly backwards
2. Put it onto the DIN Rail
3. Push downwards until stopped
4. Push at the lower front edge to lock
5. Shake the unit slightly to ensure that the retainer has locked

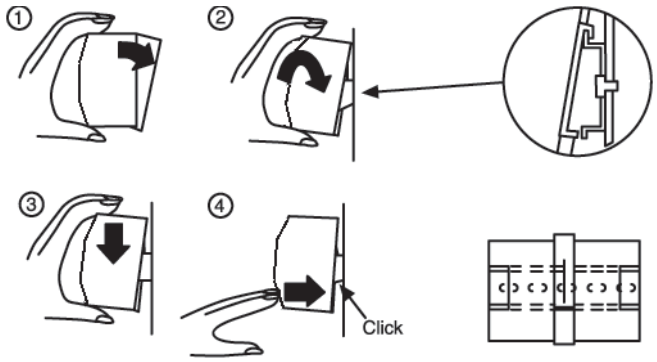

Alternative Panel Mount: Using the optional SDN-PMBRK2 accessory, the unit can be screw mounted to a panel.

Detachment from DIN Rail:

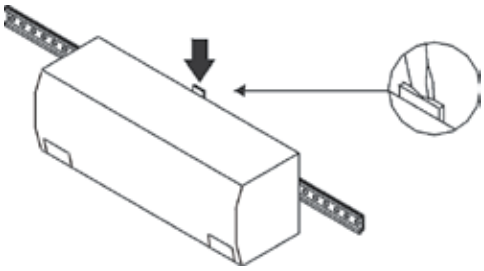

Chassis Mounting

Instead of snapping a SolaHD SDN™ unit on the DIN Rail, you can also attach it using the screw mounting set SDN-PMBRK2.

This set consists of two metal brackets, which replace the existing two aluminum profiles.

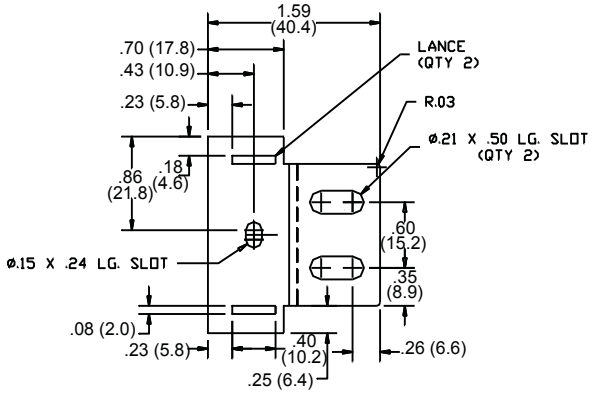

Dimensions - in. (mm)

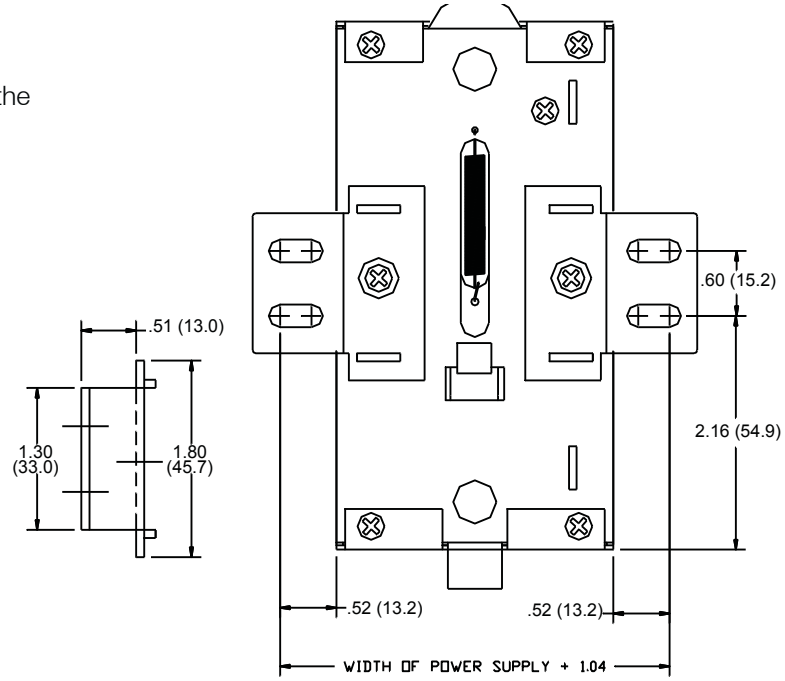

BOM #8

Product: 1492-H5

Description: 1492-H Finger-Safe Terminal Blocks

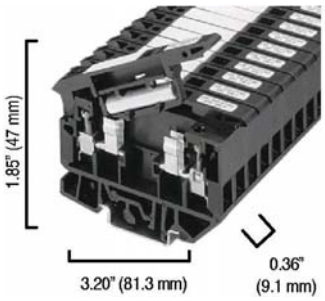

Representative Photo Only (actual product may vary based on configuration selections)

BASE DATA	
Electrical Standards	UL
Type of Device	Finger-Safe Terminal Block
Base Block Type	Single Circuit Fuse Block

DETAIL DATA	
Features	LED Blown Fuse Indicator
Wire Range	#30 - #12 AWG
Color	Black (Standard)
Bulk Pack	No Bulk Pack (Single Block)

CERTIFICATIONS AND APPROVALS	
UR	UL 486E, UL 1059; Reference File: E40735
CSA	CSA C22.2 No. 65, No. 158; On Website, Name: Rockwell, Keyword Search: 1492
IEC	EN 60947-1, EN 60947-7-1(Feed-Through), -2(Ground), -3(Fuse)
Short Circuit Current Rating	This terminal block carries a minimum of 10kA SCCR rating for all protection methods. Please see the table for other possible elevated ratings.
For CSA Certifications:	http://directories.csa-international.org/directorymain.asp
For UL Certifications Directory:	http://database.ul.com/cgi-bin/XYV/template/LISEXT/1FRAME/index.htm

BOM #9

Product: 1492-J3

Description: 1492 IEC Screw Terminal Blocks

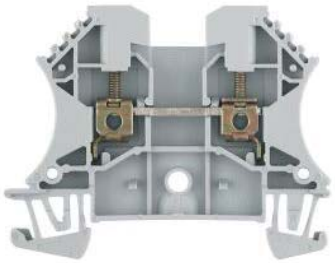

Representative Photo Only (actual product may vary based on configuration selections)

BLOCK STYLE	
Base Block Style	Standard Feed-Through Blocks
BASE DATA	
Base Block Type	One-Circuit Feed-Through Block
DETAIL DATA	
Features	Standard Feedthrough
Maximum Wire Size & Rating	UL: 30-12 AWG (25A @600V AC/DC)\nCSA: 26-12 AWG (20A @600V AC/DC)\nIEC: 2.5mm² (24A @800V AC/DC)\nEEx e II: 2.5mm²/20-14 AWG (21A @ 550V AC/DC)
Color	Gray (Standard)
CERTIFICATIONS AND APPROVALS	
UR	UL 486E, UL 1059; Reference File: E40735, E187022
CSA	CSA C22.2 No. 65, No. 158; On Website, Name: Rockwell, Keyword Search: 1492
IEC	EN 60947-1, EN 60947-7-1(Feed-Through), -2(Ground), -3(Fuse)
ATEX	http://www.rockwellautomation.com/products/certification/ex/excert.html
Short Circuit Current Rating	This terminal block carries a minimum of 10kA SCCR rating for all protection methods. Please see the table for other possible elevated ratings.
For CSA Certifications:	http://directories.csa-international.org/directorymain.asp
For UL Certifications Directory:	http://database.ul.com/cgi-bin/XYV/template/LISEXT/1FRAME/index.htm

Selection Guide

BOM #11

Allen-Bradley

CompactLogix System

Catalog Numbers 1769-L16ER-BB1B, 1769-L18ER-BB1B, 1769-L18ERM-BB1B, 1769-L24ER-QB1B, 1769-L24ER-QBFC1B, 1769-L27ERM-QBFC1B, 1769-L30ER, 1769-L30ER-NSE, 1769-L30ERM, 1769-L33ER, 1769-L33ERM, 1769-L36ERM, 1769-AENTR, 1768-L43, 1768-L43S, 1768-L45, 1768-L45S

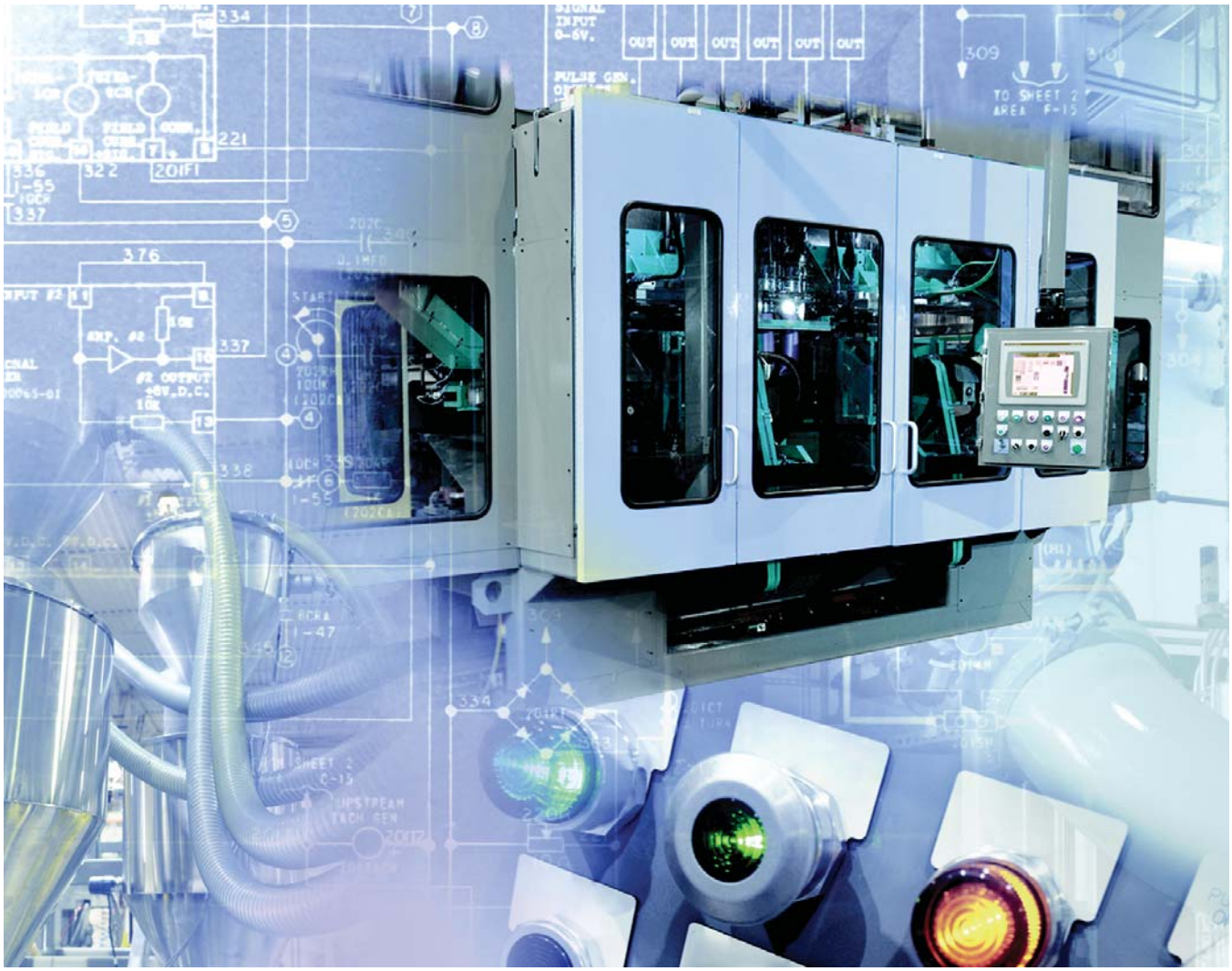

1734 POINT I/O Modules
1769 Compact I/O Modules
1768 Integrated Motion Modules
1768 and 1769 Communication Modules
1768 and 1769 CompactLogix Controllers
1768 and 1769 Compact Power Supplies

LISTEN. THINK. SOLVE.®

Logix Controllers Comparison

Characteristic	**ControlLogix** 1756-71, 1756-L72, 1756-L73, 1756-L73XT, 1756-L74, 1756-L75 **GuardLogix** 1756-L72S, 1756-L73S, 1756-L73SXT	**CompactLogix** 1769-L30ER, 1769-L30ER-NSE, 1769-L30ERM, 1769-L33ER, 1769-L33ERM, 1769-L36ERM	**CompactLogix** 1769-L24ER-BB1B, 1769-L24ER-QBFC1B, 1769-L27ERM-QBFC1B	**CompactLogix** 1769-L16ER-BB1B, 1769-L18ER-BB1B, 1769-L18ERM-BB1B	**CompactLogix** 1768-L43, 1768-L45 **Compact GuardLogix** 1768-L43S, 1768-L45S	**SoftLogix 5800™** 1789-L10, 1789-L30, 1789-L60
Controller tasks: • Continuous • Periodic • Event	32; 100 programs/task	32; 100 programs/task	32; 100 programs/task	32; 100 programs/task	• 1768-L43: 16; 32 programs/task • 1768-L45: 30; 32 programs/task	32; 100 programs/task
Event tasks	All event triggers	All event triggers	All event triggers	All event triggers, plus embedded inputs	All event triggers	All event triggers, plus outbound and Windows events
User memory	• 1756-L71: 2 MB • 1756-L72: 4 MB • 1756-L72S: 4 MB + 2 MB safety • 1756-L73, 1756-L73SXT, 1756-L73XT: 8 MB • 1756-L73S: 8 MB + 4 MB safety • 1756-L74: 16 MB • 1756-L75: 32 MB	• 1769-L30ER, 1769-L30ER-NSE, 1769-L30ERM: 1MB • 1769-L33ER, 1769-L33ERM: 2 MB • 1769-L36ERM: 3 MB	• 1769-L24ER: 750 KB • 1769-L27ERM: 1 MB	• 1769-L16ER: 384 KB • 1769-L18ER, 1769-L18ERM: 512 KB	• 1768-L43: 2 MB • 1768-L43S: 2 MB + 0.5 MB safety • 1768-L45: 3 MB • 1768-L45S: 3 MB + 1 MB safety	• 1789-L10: 2 MB; 1 controller; no motion • 1789-L30: 64 MB; 3 controllers • 1789-L60: 64 MB; 6 controllers
Memory card	Secure Digital	Secure Digital	Secure Digital	Secure Digital	CompactFlash	None
Built-in ports	1 USB	2 EtherNet/IP 1 USB	2 EtherNet/IP 1 USB	2 EtherNet/IP 1 USB	1 RS-232	Depends on personal computer
Communication options	• EtherNet/IP (standard and safety) • ControlNet (standard and safety) • DeviceNet (standard and safety) • DH+ • Remote I/O • SynchLink	• Dual-port EtherNet/IP(1) • DeviceNet	• Dual-port EtherNet/IP(1) • DeviceNet	• Dual-port EtherNet/IP(1)	• EtherNet/IP (standard and safety) • ControlNet (standard and safety) • DeviceNet (standard)	• EtherNet/IP • ControlNet • DeviceNet
Controller connections	500	256	256	256	250	250
Network connections	Per module: • 128 ControlNet (CN2/B) • 40 ControlNet (CNB) • 256 EtherNet/IP; 128 TCP (EN2*x*) • 128 EtherNet/IP; 64 TCP (ENBT)	• 1769-L30ER, 1769-L30ER-NSE, 1769-L30ERM: 256 EtherNet/IP; 120 TCP • 1769-L33ER, 1769-L33ERM: 256 EtherNet/IP; 120 TCP • 1769-L36ERM: 256 EtherNet/IP; 120 TCP	• 1769-L24ER: 256 EtherNet/IP; 120 TCP • 1769-L27ERM: 256 EtherNet/IP; 120 TCP	• 1769-L16ER: 256 EtherNet/IP; 120 TCP • 1769-L18ER, 1769-L18ERM: 256 EtherNet/IP; 120 TCP	Per module: • 48 ControlNet • 128 EtherNet/IP; 64 TCP	Per module: • 48 ControlNet • 128 EtherNet/IP; 64 TCP
EtherNet/IP nodes in a single Logix Designer application, max	N/A	• 1769-L30ER, 1769-L30ER-NSE, 1769-L30ERM: 16 • 1769-L33ER, 1769-L33ERM: 32 • 1769-L36ERM: 48	• 1769-L24ER: 8 • 1769-L27ERM: 16	• 1769-L16ER: 4 • 1769-L18ER, 1769-L18ERM: 8	N/A	N/A
Controller redundancy	Full support	Backup via DeviceNet	Backup via DeviceNet	—	Backup via DeviceNet	—
Integrated motion	• Integrated motion on an EtherNet/IP network • SERCOS interface • Analog options	Integrated motion on an EtherNet/IP network	Integrated motion on an EtherNet/IP network	Integrated motion on an EtherNet/IP network	SERCOS interface	• SERCOS interface • Analog encoder input
Programming languages	• Standard task: all languages • Safety task: relay ladder, safety application instructions	• Relay ladder • Structured text • Function block • SFC	• Relay ladder • Structured text • Function block • SFC	• Relay ladder • Structured text • Function block • SFC	• Standard task: all languages • Safety task: relay ladder, safety application instructions	• Relay ladder • Structured text • Function block • SFC • External routines (C/C++)

(1) CompactLogix™ 5370 controllers have two EtherNet/IP ports to connect to an EtherNet/IP network. The ports carry the same network traffic as part of the controller's embedded switch. The controller uses only one IP address.

Select a CompactLogix System

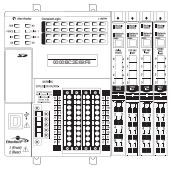

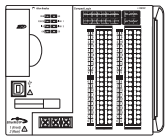

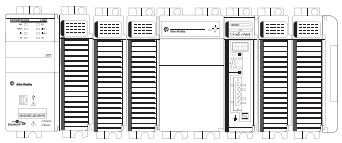

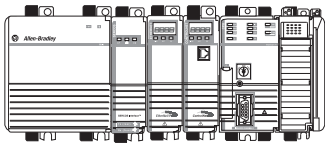

1 CompactLogix Controllers — Page 7

Select:
- A controller with sufficient memory
- A memory card

2 CompactLogix Communication Options — Page 13

Select:
- Networks
- Communication interfaces
- Associated cables and network equipment

3 CompactLogix Integrated Motion — Page 16

Select:
- A CompactLogix 5370 controller for integrated motion on an EtherNet/IP network
- A 1768 CompactLogix controller for SERCOS motion
- Drives, motors, and accessories (use the Motion Analyzer tool)

4 Compact GuardLogix Integrated Safety — Page 20

Select:
- A 1768 Compact GuardLogix® controller for integrated safety

5 Additional Local I/O Modules — Page 24

Select:
- 1734 POINT I/O™ or 1769 Compact I/O™ modules
- Associated cables and accessories

6 CompactLogix Power Supplies — Page 30

Select:
- One 1769 power supply for each CompactLogix 5370 L3 controller
- One 1768 power supply for each 1768 CompactLogix controller
- Additional 1769 power supplies as needed

Optional

Programming Software — Page 31

CompactLogix Controllers Overview

The CompactLogix system is designed to provide a Logix solution for small and mid-size applications. Typically, these applications are machine-level control applications. A simple system can consist of a standalone controller with a single bank of I/O modules and DeviceNet communication. In a more complex system, add other networks, motion control, and safety control. As part of the Integrated Architecture™ system, the CompactLogix controllers use the same programming software, network protocol, and information capabilities as all Logix controllers, providing a common development environment for all control disciplines.

- The CompactLogix 5370 L3 controllers deliver scalable, affordable control ideal for applications from small standalone equipment to high-performance indexing tables, process skids, case packers and erectors, and packaging. The CompactLogix 5370 L3 controllers also provide a truly integrated motion solution.
- The CompactLogix 5370 L2 controllers combine the power of the Logix architecture with the flexibility of Compact I/O modules. From small standalone equipment to higher performance applications, these controllers are ideal for assembly machines, hoisting systems, process skids, indexing tables, and packaging.
- The CompactLogix 5370 L1 controllers combine the power of the Logix architecture with the flexibility of POINT I/O. Ideal for small to mid-size machines, these controllers offer value to customers looking for the benefits of Integrated Architecture in a lower cost system.

CompactLogix 5370 System on an EtherNet/IP Network

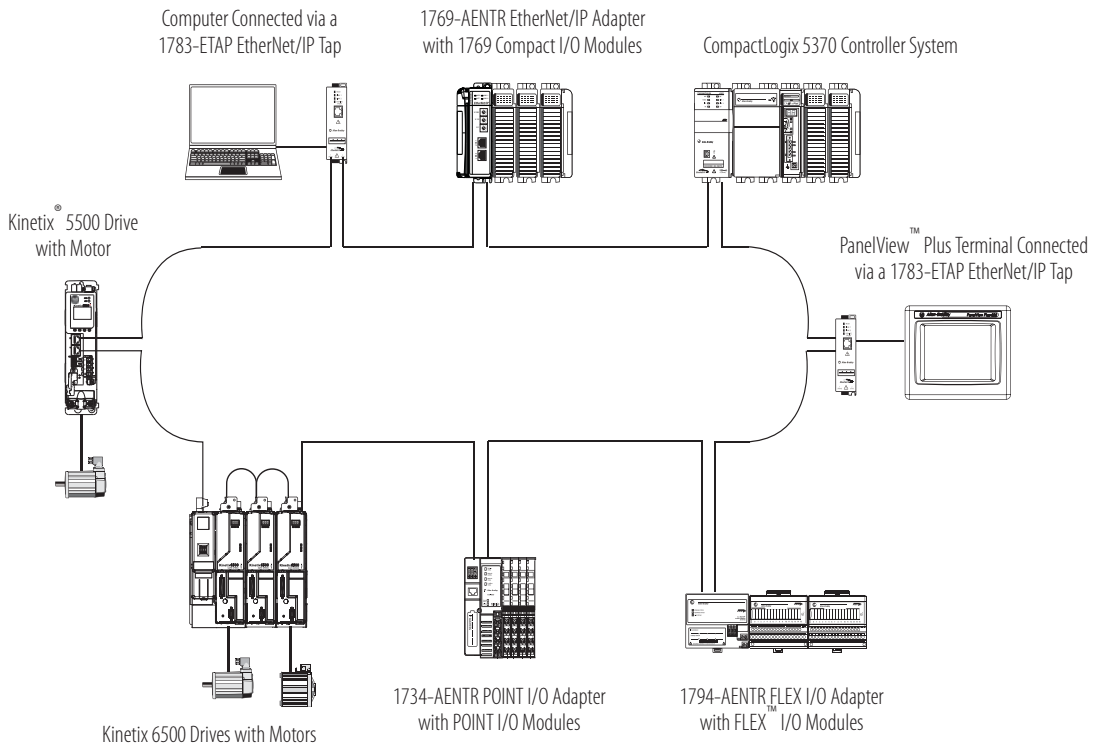

The CompactLogix 5370 L2 and L3 controllers support DeviceNet connectivity.

CompactLogix 5370 System on an DeviceNet Network

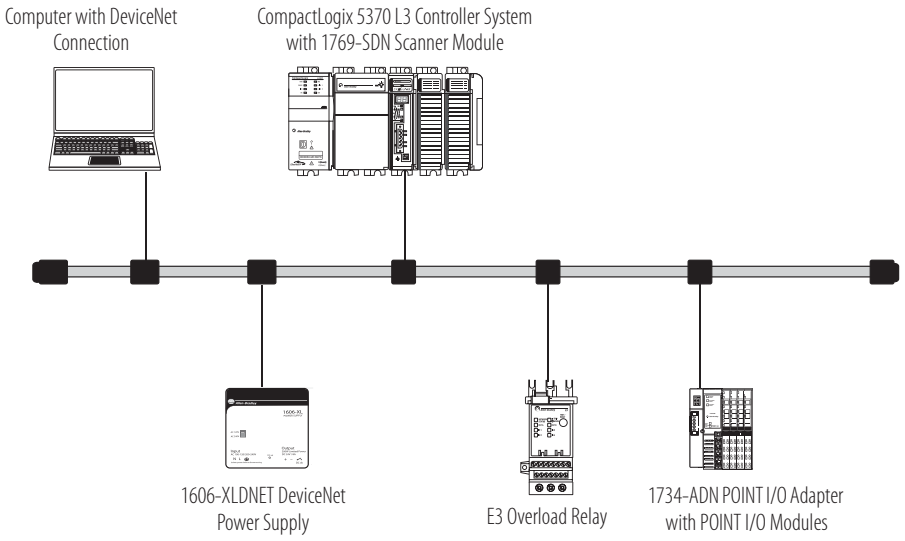

1768 CompactLogix System

The 1768 CompactLogix system combines a 1768 backplane for communication and motion support and a 1769 backplane for I/O support. The 1768 controller is designed for integrated motion, integrated safety, and more complex communication requirements than the other CompactLogix controllers. The 1768 controller has one serial port. Add 1768 modules for motion control, EtherNet/IP communication, and ControlNet communication.

1768 CompactLogix System on an EtherNet/IP Network

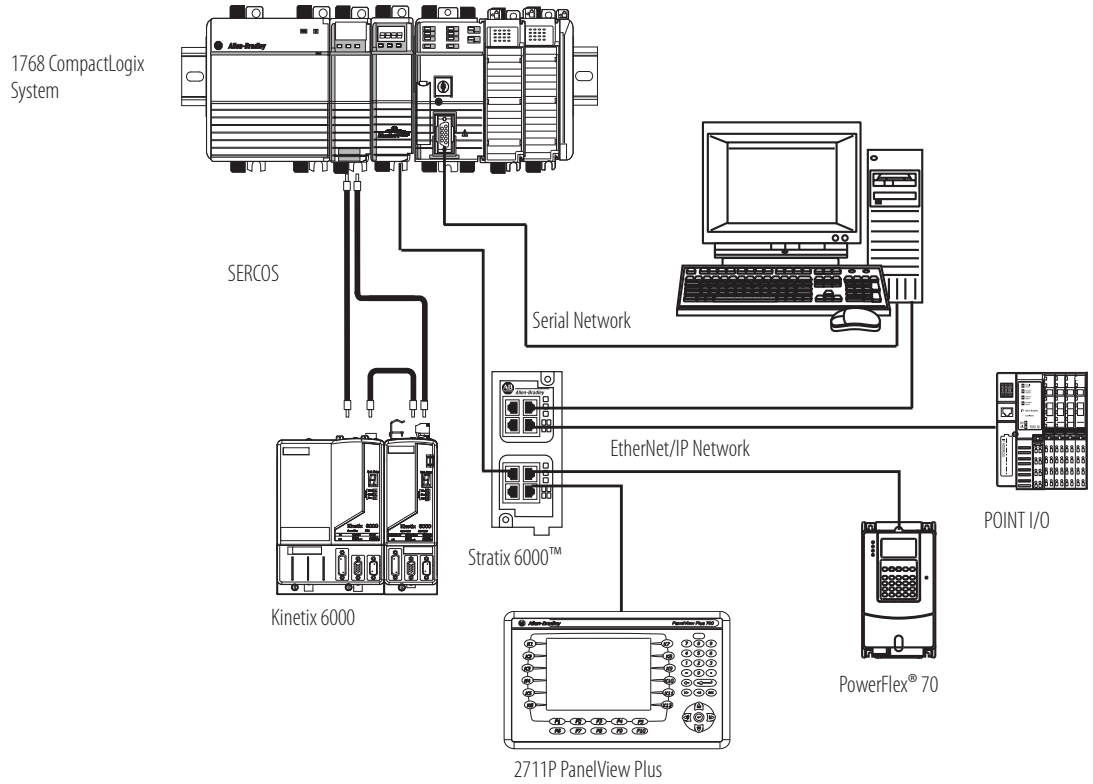

1768 Compact GuardLogix Safety System

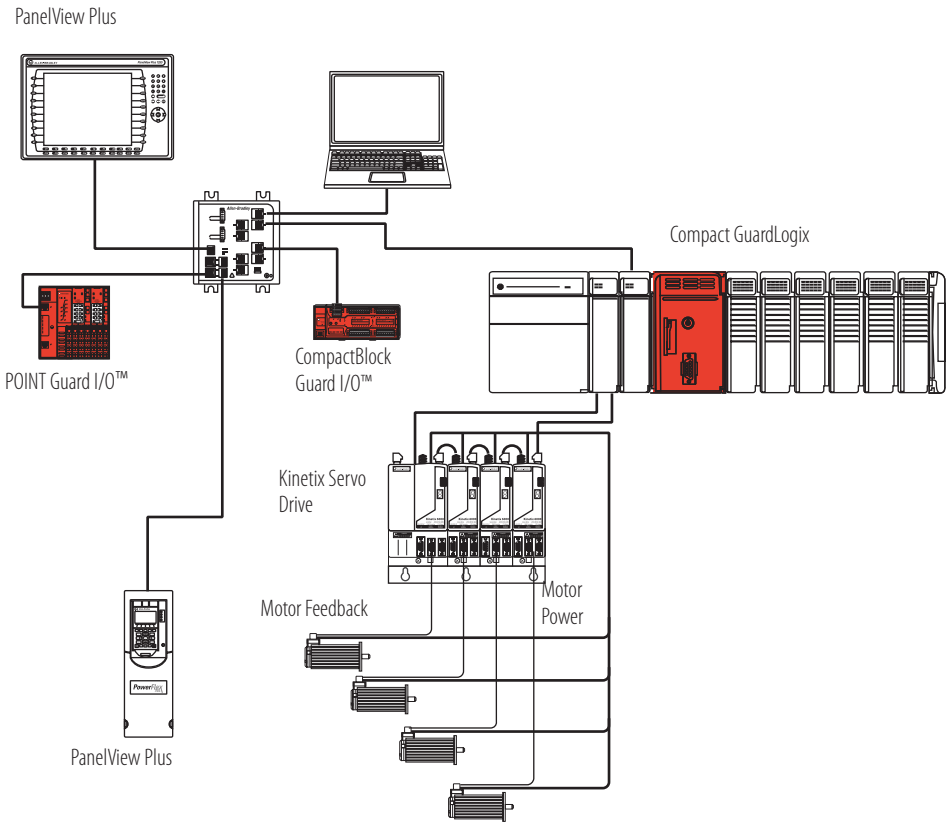

CompactLogix Controllers

The CompactLogix platform brings together the benefits of the Logix platform— common programming environment, common networks, common control engine—in a small footprint with high performance. Combined with Compact I/O modules, the CompactLogix platform is perfect for tackling smaller, machine-level control applications, with or without simple motion, with unprecedented power and scalability. A CompactLogix platform is ideal for systems that require standalone and system-connected control over EtherNet/IP, ControlNet, or DeviceNet networks.

For detailed specifications, see CompactLogix Controllers Specifications Technical Data, publication 1769-TD005.

Characteristic	CompactLogix 5370 L1 Controllers	CompactLogix 5370 L2 Controllers	CompactLogix 5370 L3 Controllers	1768 Controllers
Controller application	Small applications Embedded 1734 I/O modules	Small applications Embedded 1769 I/O modules	General purpose	Integrated safety Integrated SERCOS motion
Controller tasks	32; 100 programs/task	32; 100 programs/task	32; 100 programs/task	• 1768-L43: 16; 32 programs/task • 1768-L45: 30; 32 programs/task
Event tasks	Consumed tag, EVENT instruction, embedded inputs, remote I/O, axis, and motion event triggers	Consumed tag, EVENT instruction, remote I/O, axis, and motion event triggers	Consumed tag, EVENT instruction, remote I/O, axis, and motion event triggers	Consumed tag, EVENT instruction, remote I/O, axis, and motion event triggers
User memory	• 1769-L16ER-BB1B: 384 KB • 1769-L18ER-BB1B, 1769-L18ERM-BB1B: 512 KB	• 1769-L24ER-QB1B, 1769-L24ER-QBFC1B: 750 KB • 1769-L27ERM-QBFC1B: 1 MB	• 1769-L30ER, 1769-L30ERM, 1769-L30ER-NSE: 1MB • 1769-L33ER, 1769-L33ERM: 2 MB • 1769-L36ERM: 3 MB	• 1768-L43: 2 MB • 1768-L43S: 2 MB + 0.5 MB safety • 1768-L45: 3 MB • 1768-L45S: 3 MB + 1 MB safety
Built-in ports	• 2 EtherNet/IP(1) • 1 USB	• 2 EtherNet/IP(1) • 1 USB	• 2 EtherNet/IP(1) • 1 USB	• 1 port RS- 232 serial (DF1 or ASCII)
Communication options	• Dual-port EtherNet/IP	• Dual-port EtherNet/IP • DeviceNet	• Dual-port EtherNet/IP • DeviceNet	• EtherNet/IP (standard and safety) • ControlNet (standard and safety) • DeviceNet (standard)

(1) CompactLogix 5370 controllers have two EtherNet/IP ports to connect to an EtherNet/IP network. The ports carry the same network traffic as part of the controller's embedded switch. The controller uses only one IP address.

For information on estimating memory requirements for you application, see Logix5000 Controllers Execution Time and Memory Use Reference Manual, publication 1756-RM087.

CompactLogix 5370 L3 Controllers

In a CompactLogix 5370 L3 controller system, the 1769 I/O modules can be placed to the left and the right of the power supply. As many as eight modules can be placed on each side of the power supply. The CompactLogix 5370 L3 controller comes with:

- dual EtherNet/IP ports for ring topologies.
- USB port for firmware download and programming.

Characteristic	1769-L30ER	1769-L30ERM	1769-L30ER-NSE	1769-L33ER	1769-L33ERM	1769-L36ERM
Available user memory	1 MB	1 MB	1 MB No capacitor	2 MB	2 MB	3 MB
Memory card	1784-SD1 (1 GB), shipped with controller 1784-SD2 (2 GB)					
Communication ports	• 2 EtherNet/IP • 1 USB					
EtherNet/IP connections	• 256 EtherNet/IP • 120 TCP	• 256 EtherNet/IP • 120 TCP	• 256 EtherNet/IP • 120 TCP	• 256 EtherNet/IP • 120 TCP	• 256 EtherNet/IP • 120 TCP	• 256 EtherNet/IP • 120 TCP
EtherNet/IP nodes in a single Logix Designer application, max	16			32		48
Integrated motion on an EtherNet/IP network	—	Supports up to 4 axes	—	—	Supports up to 8 axes	Supports up to 16 axes
Module expansion capacity	8 1769 modules 1 bank of modules			16 1769 modules 2 banks of modules		30 1769 modules 3 banks of modules
Battery	None					
Power supply distance rating	4 modules			4 modules		4 modules
Programming software support	• RSLogix 5000 software, version 20 - For controllers that use firmware revision 20.*xxx*. • Logix Designer application, version 21 or later - For controllers that use firmware revision 21.*xxx* or later.					

These controllers replace previous catalog numbers.

New Controller[1]	Replaces Previous Controller[2]	Differences
1769-L30ER 1769-L30ERM 1769-L30ER-NSE	1769-L31 1769-L32C[3] 1769-L32E	• Additional memory • Integrated motion on EtherNet/IP support (1769-L30ERM, 1769-L33ERM, 1769-L36ERM) • USB port instead of RS-232 port • Dual-port EtherNet/IP support • SD card instead of CompactFlash card
1769-L33ER 1769-L33ERM	1769-L35CR[3] 1769-L35E	
1769-L36ERM	Any previous 1769-L3*x* controller	

(1) IMPORTANT: Typically, you can use any of the new controllers listed in each row as replacements for any of the previous controllers listed in the corresponding cell to the right. For example, you can replace a 1769-L32E with a 1769-L30ER, 1769-L30ERM, or 1769-L30ER-NSE controller.
In some rare cases, system configuration prevents controller replacement as shown above. For example, if your system uses a 1769-L32E controller with 12 expansion modules, you cannot replace that controller with a 1769-L30ER, 1769-L30ERM, or 1769-L30ER-NSE controller. Those controllers support no more than 8 expansion modules. You must replace the 1769-L32E controller with a 1769-L33ER, 1769-L33ERM, or 1769-L36ERM controller.
We recommend that before you upgrade your controllers, consider your application requirements to verify that the replacements listed above apply.

(2) These catalog numbers are still available for sale, see page 12 for details. Please contact your local Rockwell Automation sales office for ordering information.

(3) Requires converting from ControlNet connections to EtherNet/IP connections.

CompactLogix Communication Options

You can configure your system for information exchange between a range of devices and computing platforms and operating systems. Select a CompactLogix controller with integrated communication or the appropriate communication module.

For detailed specifications, see:

- CompactLogix Controllers Specifications Technical Data, publication 1769-TD005.
- CompactLogix Communication Modules Specifications Technical Data, publication 1769-TD007.

EtherNet/IP Communication Options

The Ethernet Industrial network protocol (EtherNet/IP) is an open industrial-networking standard that supports both real-time I/O messaging and message exchange. The EtherNet/IP network uses off-the-shelf Ethernet communication chips and physical media.

Dual-port EtherNet/IP support embeds switch technology directly in the controller to so the controller can operate on star, linear, or ring EtherNet/IP topologies.

Cat. No.	Description	Communication Rate	Logix Resources[1]	TCP/IP Connections
1769-L16ER-BB1B,	CompactLogix 5370 L1 controller with integrated EtherNet/IP dual-port, POINT I/O form factor	10/100 Mbps	4 nodes 256 EtherNet/IP connections	120
1769-L18ER-BB1B, 1769-L18ERM-BB1B			8 nodes 256 EtherNet/IP connections	
1769-L24ER-BB1B, 1769-L24ER-QBFC1B	CompactLogix 5370 L2 controller with integrated EtherNet/IP dual-port, Compact I/O form factor	10/100 Mbps	8 nodes 256 EtherNet/IP connections	120
1769-L27ERM-QBFC1B		10/100 Mbps	16 nodes 256 EtherNet/IP connections	
1769-L30ER, 1769-L30ERM	CompactLogix 5370 L3 controller with integrated EtherNet/IP dual-port	10/100 Mbps	16 nodes 256 EtherNet/IP connections	120
1769-L33ER, 1769-L33ERM			32 nodes 256 EtherNet/IP connections	
1769-L36ERM			48 nodes 256 EtherNet/IP connections	
1769-AENTR	1769 EtherNet/IP adapter	10/100 Mbps	128 EtherNet/IP connections	96
1768-ENBT	1768 EtherNet/IP communication bridge module	10/100 Mbps	128 EtherNet/IP connections	64
1768-EWEB	1768 Ethernet web server module	10/100 Mbps	128 EtherNet/IP connections	64

(1) The number of nodes listed for CompactLogix 5370 controllers represents the maximum number of EtherNet/IP nodes you can include in a Logix Designer application project for those controller. For example, in a Logix Designer application project that uses a 1769-L18ERM-BB1B controller, you can add as many as 8 EtherNet/IP nodes to the project.

Serial Communication Options

These CompactLogix controllers support serial communication.

Cat. No.	Serial Options
1769-L16ER-BB1B, 1769-L18ER-BB1B, 1769-L18ERM-BB1B	1734-232ASC module for an RS-232 serial interface 1734-485 ASC module for an RS-422 and RS-485 serial device
1769-L24ER-BB1B, 1769-L24ER-QBFC1B	1769-ASCII module for an ASCII interface to RS-232, RS-422, and RS-485 devices 1769-SM2 module for a Modbus RTU interface
1769-L27ERM-QBFC1B	
1769-L30ER, 1769-L30ERM	
1769-L33ER, 1769-L33ERM	
1769-L36ERM	
1768-L43, 1768-L43S, 1768-L45, 1768-L45S	Built-in serial port 1769-ASCII module for an ASCII interface to RS-232, RS-422, and RS-485 devices 1769-SM2 module for a Modbus RTU interface

Modbus Support

To access a Modbus TCP network, connect through the embedded Ethernet port of the CompactLogix 5370 controllers and execute a specific ladder-logic routine. For more information, see Knowledgebase document 470365 at http://www.rockwellautomation.com/knowledgebase/.

To access a Modbus RTU network, connect through the serial port (if available) and execute a specific ladder-logic routine. For more information, see Using Logix5000 Controllers as Masters or Slaves on Modbus Application Solution, publication CIG-AP129.

1734 Specialty I/O Modules

Cat. No.	Description	Wiring Base	POINTBus Current
1734-232ASC 1734-485ASC	The 1734-232ASC and 1734-485ASC serial interface modules offer a serial-link communication interface solution for peripheral products with RS-232 (only 1734-232ASC), RS-485, and RS-422 ports (only 1734-485ASC.)	1734-TB, 1734-TBS	75 mA
1734-ARM	The 1734-ARM address reserve module reserves address and slot numbers to maintain a numbering scheme of an existing system. The 1734-ARM has no module configuration and does not communicate I/O data.	1734-TB, 1734-TBS	75 mA
1734-CTM 1734-VTM	The common terminal module (1734-CTM) and voltage term66inal module (1734-VTM) expand the termination capabilities of POINT I/O modules. Install the modules to provide support for higher density (8 channel) POINT I/O modules.	1734-TB, 1734-TBS, 1734-TOP, 1734-TOPS	75 mA
1734-SSI	The 1734-SSI module collects serial data from absolute-position, encoding sensors that use standard Synchronous Serial Interface (SSI) protocol.	1734-TB, 1734-TBS	110 mA

1769 Compact I/O Modules

The 1769 Compact I/O modules can be installed on the CompactLogix 5370 L2 and L3 controllers and 1768 CompactLogix controllers. The modules mechanically lock together by means of a tongue-and-groove design and have an integrated communication bus that is connected from module to module by a moveable bus connector.

Each I/O module includes a built-in removable terminal block with finger-safe cover for connections to I/O sensors and actuators. The terminal block is behind a door at the front of the module. I/O wiring can be routed from beneath the module to the I/O terminals.

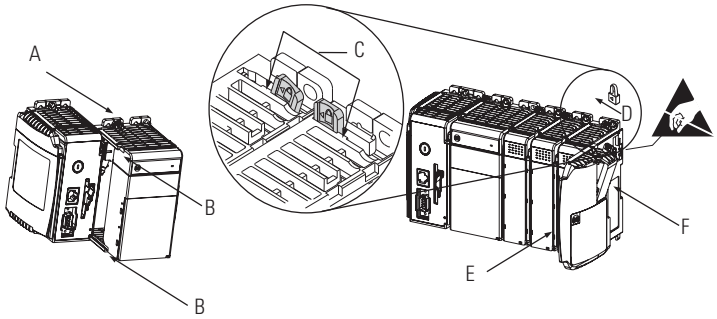

For detailed specifications, see 1769 Compact I/O Modules Specifications Technical Data, publication 1769-TD006.

Power Supply Distance Ratings

Check each module's specification table for the power supply distance rating. This indicates how many slot positions the module can be from the power supply.

1769 AC Digital Modules

Cat. No.	Inputs/Outputs	Voltage Category	Operating Voltage Range	Backplane Current	Power Supply Distance Rating
1769-IA8I	8 inputs, individually isolated	100/120V AC	79…132V AC, 47…63 Hz	90 mA @ 5.1V(1)	8
1769-IA16	16 inputs	100/120V AC	79…132V AC, 47…63 Hz	115 mA @ 5.1V	8
1769-IM12	12 inputs	200/240V AC	159…265V AC, 47…63 Hz	100 mA @ 5.1V	8
1769-OA8	8 outputs	100/240V AC	85…265V AC 47…63 Hz	145 mA @ 5.1V	8
1769-OA16	16 outputs	100/240V AC	85…265V AC 47…63 Hz	225 mA @ 5.1V	8

(1) Maximum is 190 mA.

1769 DC Digital Modules

Cat. No.	Inputs/Outputs	Voltage Category	Operating Voltage Range	Backplane Current	Power Supply Distance Rating
1769-IG16	16 inputs	5V DC TTL	4.5…5.5V DC	120 mA @ 5.1V	8
1769-IQ16	16 inputs	24V DC sink/source	10…30V DC @ 30 °C (86 °F) 10…26.4V DC @ 60 °C (140 °F)	115 mA @ 5.1V	8
1769-IQ16F	16 inputs, high-speed	24V DC sink/source	10…30V DC @ 30 °C (86 °F) 10…26.4V DC @ 60 °C (140 °F)	100 mA @ 5.1V	8
1769-IQ32	32 inputs	24V DC sink/source	10…30V DC @ 30 °C (86 °F) 10…26.4V DC @ 60 °C (140 °F)	170 mA @ 5.1V	8
1769-IQ32T	32 inputs	24V DC sink/source	20.4…26.4V DC @ 60 °C (140 °F)	170 mA @ 5.1V	8
1769-IQ6XOW4	6 inputs 4 outputs	24V DC sink/source input AC/DC normally open relay contact outputs	10…30V DC @ 30 °C (86 °F) 10…26.4V DC @ 60 °C (140 °F)	105 mA @ 5.1V 50 mA @ 24V	8
1769-OB8	8 outputs	24V DC source	20.4…26.4V DC	145 mA @ 5.1V	8
1769-OB16	16 outputs	24V DC source	20.4…26.4V DC	200 mA @ 5.1V	8
1769-OB16P	16 outputs, protected	24V DC source	20.4…26.4V DC	160 mA @ 5.1V	8
1769-OB32	32 outputs	24V DC source	20.4…26.4V DC	300 mA @ 5.1V	6
1769-OB32T	32 outputs	24V DC source	10.2…26.4V DC	220 mA @ 5.1V	8
1769-OG16	16 outputs	5V DC TTL	4.5…5.5V DC	200 mA @ 5.1V	8
1769-OV16	16 outputs	24V DC sink	20.4…26.4V DC	200 mA @ 5.1V	8
1769-OV32T	32 outputs	24V DC sink	10.2…26.4V DC	300 mA @ 5.1V	8

1769 Contact Output Modules

Cat. No.	Inputs/Outputs	Operating Voltage Range	Backplane Current	Power Supply Distance Rating
1769-OW8	8 outputs	5…265V AC 5…125V DC	125 mA @ 5.1V 100 mA @ 24V	8
1769-OW8I	8 outputs, individually isolated	5…265V AC 5…125V DC	125 mA @ 5.1V 100 mA @ 24V	8
1769-OW16	16 outputs	5…265V AC 5…125V DC	205 mA @ 5.1V 180 mA @ 24V	8

1769 Analog Modules

Cat. No.	Inputs/Outputs	Range	Resolution	Backplane Current	Power Supply Distance Rating
1769-IF4	4 inputs, differential or single-ended	±10V, 0…10V, 0…5V, 1…5V 0…20 mA, 4…20 mA	14 bits (unipolar) 14 bits plus sign (bipolar)	120 mA @ 5.1V 60 mA @ 24V	8
1769-IF4I	4 inputs, differential or single-ended, individually isolated	±10V, 0…10V, 0…5V, 1…5V 0…20 mA, 4…20 mA	16 bits (unipolar) 15 bits plus sign (bipolar)	145 mA @ 5.1V 125 mA @ 24V	8
1769-IF8	8 inputs, differential or single-ended	±10V, 0…10V, 0…5V, 1…5V 0…20 mA, 4…20 mA	16 bits (unipolar) 15 bits plus sign (bipolar)	120 mA @ 5.1V 70 mA @ 24V	8
1769-IF16C	16 inputs, single-ended	0…20 mA, 4…20 mA	16 bits (unipolar) 15 bits plus sign (bipolar)	190 mA @ 5.1V 70 mA @ 24V	8
1769-IF16V	16 inputs, differential	±10V, 0…10V, 0…5V, 1…5V	16 bits (unipolar) 15 bits plus sign (bipolar)	190 mA @ 5.1V 70 mA @ 24V	8
1769-IF4XOF2	4 differential or single-ended inputs 2 single-ended outputs	0…10V 0…20 mA	Input: 8 bits plus sign Output: 8 bits plus sign	120 mA @ 5.1V 160 mA @ 24V	8
1769-IF4FXOF2F	4 fast differential or single-ended inputs 2 fast single-ended outputs	±10V, 0…10V, 0…5V, 1…5V 0…20 mA, 4…20 mA	Input: 14 bits (unipolar) 14 bits plus sign (bipolar) Output: 13 bits (unipolar) 13 bits plus sign (bipolar)	220 mA @ 5.1V 120 mA @ 24V	8
1769-OF2	2 outputs, single-ended	±10V, 0…10V, 0…5V, 1…5V 0…20 mA, 4…20 mA	14 bits (unipolar) 14 bits plus sign (bipolar)	120 mA @ 5.1V 120 mA @ 24V	8
1769-OF4	4 outputs, single-ended	±10V, 0…10V, 0…5V, 1…5V 0…20 mA, 4…20 mA	15 bits plus sign unipolar and bipolar	120 mA @ 5.1V 170 mA @ 24V	8
1769-OF4CI	4 outputs, differential, individually isolated	0…20 mA 4…20 mA	16 bits (unipolar)	140 mA @ 5.1V 145 mA @ 24V	8
1769-OF4VI	4 outputs, differential, individually isolated	±10V 0…10V 0…5V 1…5V	15 bits plus sign (bipolar)	145 mA @ 5.1V 75 mA @ 24V	8
1769-OF8C	8 outputs, single-ended	0…20 mA 4…20 mA	16 bits (unipolar)	140 mA @ 5.1V 145 mA @ 24V	8
1769-OF8V	8 outputs, single-ended	±10V 0…10V 0…5V 1…5V	16 bits plus sign (bipolar)	145 mA @ 5.1V 125 mA @ 24V	8

1769 Expansion Cables

If you divide 1769 modules into multiple banks, make sure:

- each bank needs its own power supply.
- use expansion cables to connect the banks.
- the last I/O bank requires an end cap.

Vertical

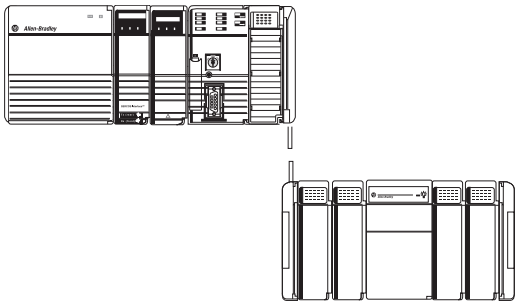

Horizontal

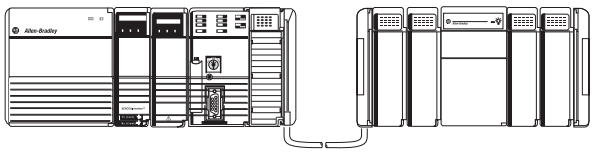

How you orient I/O banks determines the expansion cables you need to connect the I/O banks.

If you add a	And connect the chassis	Use this cable[1]
Second bank	Right to left	1769-CRL*x*
	Right to right	1769-CRR*x*
Third bank	Right to left	1769-CRL*x*
	Right to right	1769-CRR*x*
	Left to left	1769-CLL*x*

(1) Where *x* = 1 for 1 ft (305 mm) or 3 for 3.28 ft (1 m).

1769 End Caps

The final 1769 Compact I/O bank requires an end cap on the end without the expansion cable. The CompactLogix 5370 L2 controller comes with a right-end cap, so you do not need to order one separately.

- Right end cap, catalog number 1769-ECR
- Left end cap, catalog number 1769-ECL

1769 Wiring Systems

As an alternative to buying removable terminal blocks (RTBs) and connecting the wires yourself, you can buy a wiring system of:

- interface modules (IFMs) that provide the output terminal blocks for digital I/O modules. Use the pre-wired cables that match the I/O module to the IFM.
- analog interface modules (AIFMs) that provide the output terminal blocks for analog I/O modules. Use the pre-wired cables that match the I/O module to the AIFM.
- I/O module-ready cables. One end of the cable assembly is an RTB that plugs into the front of the I/O module. The other end has individually color-coded conductors that connect to a standard terminal block.

Removable Terminal Kits

You can order removable terminal kits with the CompactLogix 5370 L1 and L2 controllers separately. The kits are used to connect wiring to the controllers. describes the kits.

Cat. Nos.	Controllers Supported	Description
1769-RTB45	CompactLogix 5370 L1	• Four 10-pin connectors used to connect wiring to the controllers' embedded digital I/O module. • One 5-pin connector used to connect an external 24V DC power source to the controller.
1769-RTB40DIO	CompactLogix 5370 L2	Four 10-pin connectors used to connect wiring to the controllers' embedded digital I/O module.
1769-RTB40AIO	1769-L24ER-QBFC1B and 1769-L27ERM-QBFC1B	Four 10-pin connectors used to connect wiring to the controllers' embedded analog I/O module.

CompactLogix Power Supplies

Select power supplies based on the controller and the number of additional I/O banks.

For a	Select
CompactLogix 5370 L3 controller	• One 1769 power supply for the controller and local I/O modules • One 1769 power supply for each additional bank of I/O modules
CompactLogix 5370 L2 controller	No power supply as it is integral to the controller package
CompactLogix 5370 L1 controller	No power supply as it is integral to the controller package
1768 CompactLogix controller	• One 1768 power supply for the controller and 1768 modules • One 1769 power supply for each additional bank of I/O modules

Power Supplies

Cat. No.	Description	Voltage Category	Operating Voltage Range
1769-PA2	1769 Compact I/O expansion power supply	120V/220V AC	85...265V AC
1769-PB2		24V DC	19.2...31.2V DC
1769-PA4		120V/220V AC	85...265V AC or 170...265V AC (switch selectable) 47...63 Hz
1769-PB4		24V DC	19.2...31.2V DC
1768-PA3	1768 CompactLogix power supply	120V/220V AC	85...265V AC or 108...132V DC
1768-PB3		24V DC	16.8...31.2V DC

For detailed specifications, see Compact Power Supplies Specifications Technical Data, publication 1769-TD008.

Allen-Bradley, Compact GuardLogix, Compact I/O, CompactBlock Guard I/O, CompactLogix, ControlLogix, FactoryTalk, GuardLogix, Integrated Architecture, Kinetix, Logix5000, PanelView, POINT Guard I/O, POINT I/O, POINTBus, PowerFlex, Rockwell Software, Rockwell Automation, RSLinx, RSLogix, RSNetWorx, SCANport, SoftLogix, Stratix 6000, Stratix 8000, Studio 5000, Studio 5000 Logix Designer, and Ultra are trademarks of Rockwell Automation, Inc.

Trademarks not belonging to Rockwell Automation are property of their respective companies.

www.rockwellautomation.com

Power, Control and Information Solutions Headquarters

Americas: Rockwell Automation, 1201 South Second Street, Milwaukee, WI 53204-2496 USA, Tel: (1) 414.382.2000, Fax: (1) 414.382.4444
Europe/Middle East/Africa: Rockwell Automation NV, Pegasus Park, De Kleetlaan 12a, 1831 Diegem, Belgium, Tel: (32) 2 663 0600, Fax: (32) 2 663 0640
Asia Pacific: Rockwell Automation, Level 14, Core F, Cyberport 3, 100 Cyberport Road, Hong Kong, Tel: (852) 2887 4788, Fax: (852) 2508 1846

Publication 1769-SG001P-EN-P - January 2014
Supersedes Publication 1769-SG001O-EN-P - January 2013

Copyright © 2014 Rockwell Automation, Inc. All rights reserved. Printed in the U.S.A.

CompactLogix Power Supplies Specifications

1768 CompactLogix Power Supplies Catalog Numbers 1768-PA3, 1768-PB3

1769 Compact I/O Power Supplies Catalog Numbers 1769-PA2, 1769-PB2, 1769-PA4, 1769-PB4

Topic	Page
1768 CompactLogix Power Supplies	3
1769 Compact I/O Power Supplies	7

Environmental Specifications - 1768 and 1769 Power Supplies

Attribute	1768-PA3, 1769-PB3 1769-PA2, 1769-PB2, 1769-PA4, 1769-PB4
Temperature, operating IEC 60068-2-1 (Test Ad, Operating Cold), IEC 60068-2-2 (Test Bd, Operating Dry Heat), IEC 60068-2-14 (Test Nb, Operating Thermal Shock)	0…60 °C (32…140 °F)
Temperature, storage IEC 60068-2-1 (Test Ab, Unpackaged Nonoperating Cold), IEC 60068-2-2 (Test Bb, Unpackaged Nonoperating Dry Heat), IEC 60068-2-14 (Test Na, Unpackaged Nonoperating Thermal Shock)	-40…85 °C (-40…185 °F)
Relative humidity IEC 60068-2-30 (Test Db, Unpackaged Nonoperating Damp Heat)	5…95% noncondensing
Vibration IEC 60068-2-6 (Test Fc, Operating)	5 g @ 10…500 Hz
Shock, operating IEC 60068-2-27 (Test Ea, Unpackaged Shock)	30 g
Shock, nonoperating IEC 60068-2-27 (Test Ea, Unpackaged Shock)	50 g

Important User Information

Solid state equipment has operational characteristics differing from those of electromechanical equipment. Safety Guidelines for the Application, Installation and Maintenance of Solid State Controls (publication SGI-1.1 available from your local Rockwell Automation sales office or online at http://www.rockwellautomation.com/literature/) describes some important differences between solid state equipment and hard-wired electromechanical devices. Because of this difference, and also because of the wide variety of uses for solid state equipment, all persons responsible for applying this equipment must satisfy themselves that each intended application of this equipment is acceptable.

In no event will Rockwell Automation, Inc. be responsible or liable for indirect or consequential damages resulting from the use or application of this equipment.

The examples and diagrams in this manual are included solely for illustrative purposes. Because of the many variables and requirements associated with any particular installation, Rockwell Automation, Inc. cannot assume responsibility or liability for actual use based on the examples and diagrams.

No patent liability is assumed by Rockwell Automation, Inc. with respect to use of information, circuits, equipment, or software described in this manual.

Reproduction of the contents of this manual, in whole or in part, without written permission of Rockwell Automation, Inc., is prohibited.

Throughout this manual, when necessary, we use notes to make you aware of safety considerations.

WARNING	Identifies information about practices or circumstances that can cause an explosion in a hazardous environment, which may lead to personal injury or death, property damage, or economic loss.
IMPORTANT	Identifies information that is critical for successful application and understanding of the product.
ATTENTION	Identifies information about practices or circumstances that can lead to personal injury or death, property damage, or economic loss. Attentions help you identify a hazard, avoid a hazard, and recognize the consequence
SHOCK HAZARD	Labels may be on or inside the equipment, for example, a drive or motor, to alert people that dangerous voltage may be present.
BURN HAZARD	Labels may be on or inside the equipment, for example, a drive or motor, to alert people that surfaces may reach dangerous temperatures.

Rockwell Automation, Rockwell Software, Allen-Bradley, TechConnect, Compact I/O, and CompactLogix are trademarks of Rockwell Automation, Inc.

Trademarks not belonging to Rockwell Automation are property of their respective companies.

1768 CompactLogix Power Supplies

The 1768 backplane requires one 1768 power supply. The power supply is a dual input supply that operates in multiple ranges. The power supply also offers a 24V dc external power source. The power supply sends 24V dc to the controller in slot 0.

- The controller converts the 24V dc to 5V dc and 24V dc and distributes it as needed.
  - 5V and 24V power to 1769 I/O modules on the right side of the controller
  - 24V power to 1768 modules on the left side of the controller

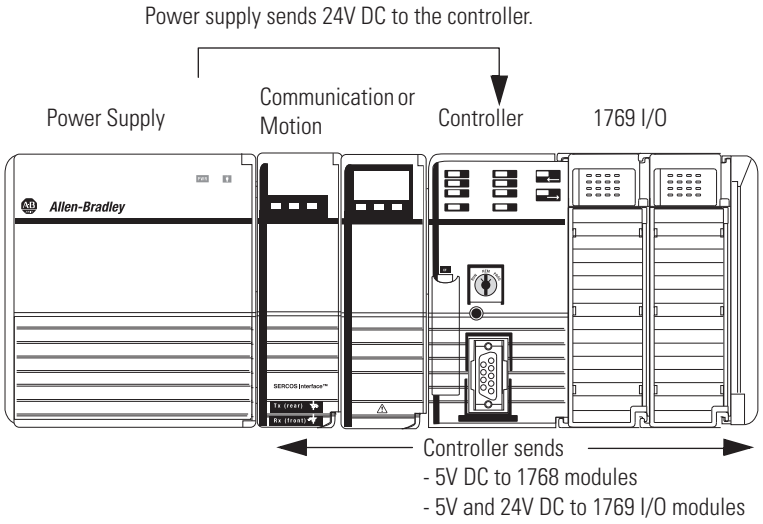

The 1768 modules do not have a distance rating to the 1768 power supply. For the 1769 I/O modules in the 1768 system, the distance rating is from the controller and not the 1768 power supply.

Technical Specifications - 1768 CompactLogix Power Supplies

Attribute	1768-PA3	1768-PB3
Input voltage range	85…265V AC 108…132V DC	16.8...31.2V DC
Input voltage, nom	120V/220V AC	24V DC
Input frequency range	47…63 Hz	DC
Input power, max	120VA/120 W	112 W
Output power, max	90 W 24V DC to backplane: 3.5 24V DC to user-accessible terminal block: 0.25 A	
Output power, min	6 W 24V DC to backplane: 0.25 A 24V DC to user-accessible terminal block: 0.0 A	
Power dissipation	30 W	22 W
Inrush current, max	50 A @ 85…132V AC 80 A @ 195…265V AC	50 A @ 16.8...31.2V DC(1)

Technical Specifications - 1768 CompactLogix Power Supplies

Attribute	1768-PA3	1768-PB3
Isolation voltage	250V, reinforced insulation type, input to system and 24V DC AUX Tested at 4250V DC for 60 s 150V, basic insulation type, 24V DC AUX to system Tested at 2200V dc for 60 s	
Internal overcurrent protection	Non-replaceable fuse is soldered in place	
Recommended external overcurrent protection	4…6 A @ 28.5…36.7 A^2S	8...12 A @ 166...250 A^2S
Overcurrent protection	15 A, user supplied	
Weight, approx.	0.98 kg (2.15 lb)	1.01 kg (2.22 lb)
Dimensions (HxWxD), approx.	131.25 x 132.75 x 105.50 mm (5.17 x 5.23 x 4.15 in.)	
Module location	DIN rail or panel mount	
Mounting screw torque	1.16 N•m (10 lb•in) - use M4 or #8 screws	
Wire category	1 - on power ports[2]	
Wire size, input power terminal	14 AWG (2.5 mm^2) solid or stranded copper wire rated at 75 °C (167 °F) or greater, 1.2 mm (3/64 in.) insulation maximum	
Wire size, output power terminal	14 AWG (2.5 mm^2)…22 AWG (0.25 mm^2) solid or stranded copper wire rated at 75 °C (167 °C) or greater, 1.2 mm (3/64 in.) insulation max	
Conductor screw torque	0.6 N•m (5 lb•in)	
North American temperature code	T4	
Output #1: 24V DC to backplane		
Ride-through interval time, min	25 ms @ 90 W	5 ms @ 90 W
Full power hold-up interval	5 ms @ 90 W	
Extended hold-up interval	8...12 s @ 1.25 W	
Output #2: 24V DC to front panel terminal block		
Voltage	18...27.60V @ front panel	
Output disable	Disable output during hold-up periods	
Enclosure type rating	None (open-style)	

(1) Does not include X-capacitor charging current.

(2) Use this conductor category information for planning conductor routing as described in the system level installation manual. See the Industrial Automation Wiring and Grounding Guidelines, publication 1770-4.1.

Certifications - 1768 CompactLogix Power Supplies

Certification[1]	1768-PA3, 1768-PB3
c-UL-us	UL Listed Industrial Control Equipment, certified for US and Canada. See UL File E65584. UL Listed for Class I, Division 2 Group A,B,C,D Hazardous Locations, certified for U.S. and Canada. See UL File E194810.
CE	European Union 89/336 EEC EMC Directive, compliant with: • EN 50082-2; Industrial Immunity • EN 61326-1; Meas./Control/Lab., Industrial Requirements • EN 61000-6-2; Industrial Immunity • EN 61000-6-4; Industrial Emissions • EN 61131-2; Programmable Controllers (Clause 8, Zone A & B) European Union 73/23/EEC LVD Directive, compliant with: • EN 1010-1; Meas./Control/Lab
C-Tick	Australian Radiocommunications Act, compliant with: AS/NZS CISPR 11; Industrial Emissions

(1) When marked. See the Product Certification link at http://www.ab.com for Declarations of Conformity, Certificates, and other certification details.

Power Requirements and Transformer Sizing - 1768 CompactLogix Power Supplies

1768-PA3 Power Dissipation

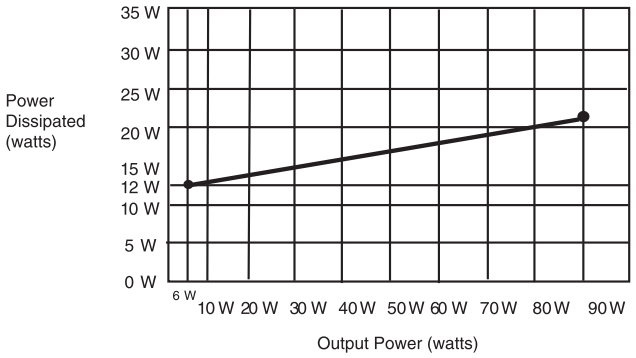

1768-PA3 Input Power Requirements

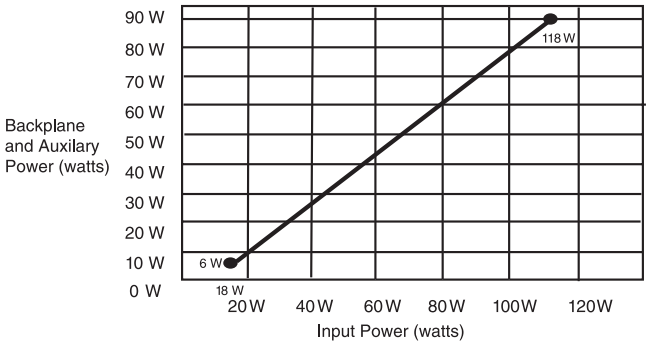

1768-PB3 Power Dissipation

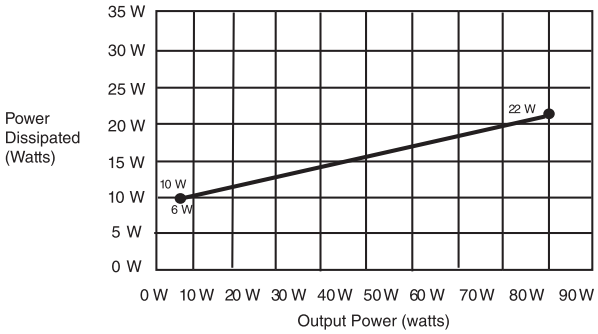

1768-PB3 Input Power Requirements

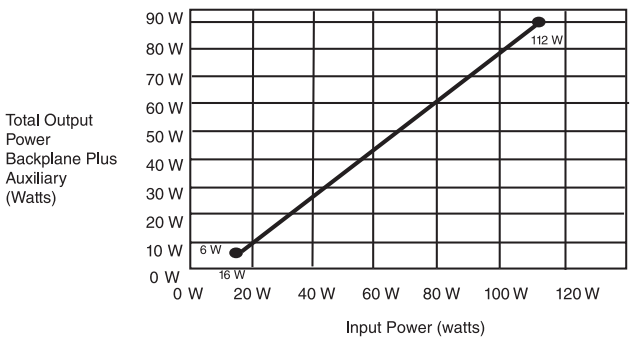

Mounting Dimensions - 1768 CompactLogix Power Supplies

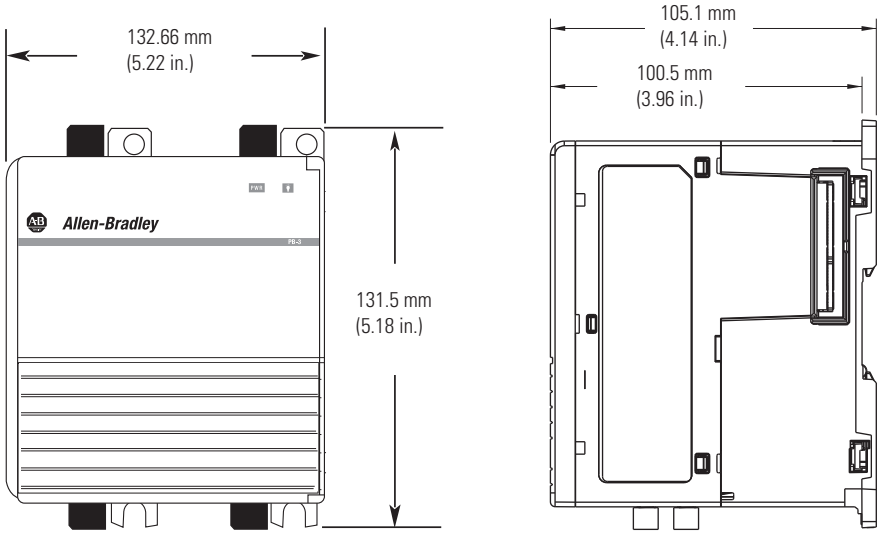

1769 Compact I/O Power Supplies

Each 1769-L3*x* controller and additional bank of I/O modules requires a 1769 power supply. Place 1769 I/O modules to the left or right of the 1769 power supply. As many as eight I/O modules can be placed on each side of the power supply.

Each 1769 module also has a power supply distance rating (the number of modules from the power supply). Each module must be located within its distance rating. See the specifications for the module to determine its distance rating.

Technical Specifications - 1769 Compact I/O Power Supplies

Attribute	1769-PA2	1769-PB2	1769-PA4	1769-PB4
Input voltage range	85…265V AC	19.2...31.2V DC	85…265V AC or 170...265V AC, switch selectable	19.2...31.2V DC
Input voltage, nom	120V/220V AC	24V DC	120V/220V AC	24V DC
Power consumption	100 VA @ 120V AC 130 VA @ 240V AC	50 VA @ 24V DC	200 VA @ 120V AC 240 VA @ 240V AC	100 VA @ 24V DC
Power dissipation	8 W @ 60° C (140° F)	7.5 W @ 60° C (140° F)	18 W @ 60° C (140° F)	14.5 W @ 60° C (140° F)
Current capacity @ 5V	2.0 A	2.0 A	4.0 A	4.0 A
Current capacity @ 24V	0.8 A	0.8 A	2.0 A	2.0 A
Inrush current, max	25 A @ 132V AC	30 A @ 31.2V DC	25 A @ 132V AC	30 A @ 31.2V DC
Isolation voltage	265V (continuous), reinforced insulation type (IEC Class 1 grounding required) Routine tested @ 2596V DC for 1 s, AC power input to system and AC power input to 24V DC user power	75V (continuous), reinforced insulation type (IEC Class 1 grounding required) Routine tested at 1697V DC for 1 s, DC power input to system	265V (continuous), reinforced insulation type (IEC Class 1 grounding required) Routine tested at 2596V DC for 1 s, AC power input to system	75V (continuous), reinforced insulation type (IEC Class 1 grounding required) Routine tested at 1697V DC for 1 s, DC power input to system
Fuse type	Wickmann 19195-3.15A Littelfuse 02183.15MXP	Wickmann 19193-6.3A Littelfuse 021706.3MXP	Wickmann 19195-3.15A Littelfuse 02183.15MXP	Wickmann 19193-6.3A Littelfuse 021706.3MXP
Weight, approx.	525 g (1.16 lb)		630 g (1.39 lb)	
Dimensions (HxWxD), approx.	118 x 70 x 87 mm (4.65 x 2.76 x 3.43 in.)			
Module location	DIN rail or panel mount			
Mounting screw torque	1.16 N•m (10 lb•in) - use M4 or #8 screws			
Power supply distance rating	8 8 I/O modules can be connected on either side of the power supply for a maximum of 16 modules			
Wire category[1]	1 - on power ports	2 - on power ports	1 - on power ports	2 - on power ports
Wire size	14 AWG (2.5 mm^2) solid copper wire rated at 90 °C (194 °F) or greater, 1.2 mm (3/64 in.) insulation max			
North American temperature code	T3C			
IEC temperature code	—	T4	—	T4
Enclosure type rating	None (open-style)			

[1] Use this conductor category information for planning conductor routing as described in the system level installation manual. See the Industrial Automation Wiring and Grounding Guidelines, publication 1770-4.1.

Certifications - 1769 Compact Power Supplies

Certification[1]	1769-PA2, 1769-PA4	1769-PB2, 1769-PB4
c-UL-us	UL Listed for Class 1, Division 2 Group A,B,C,D Hazardous Locations, certified for U.S. and Canada. See UL File E10314	
CE	European Union 2004/108/EC EMC Directive, compliant with: • EN 61000-6-2; Industrial Immunity • EN 61000-6-4; Industrial Emissions	
C-Tick	Australian Radiocommunications Act, compliant with: AS/NZS CISPR 11; Industrial Emissions	
	—	European Union 94/9/EC ATEX Directive, compliant with: • EN 60079-15; Potentially Explosive Atmospheres, Protection "n" (Zone 2) • EN 60079-0; General Requirements (Zone 2)

(1) When marked. See the Product Certification link at http://www.ab.com for Declarations of Conformity, Certificates, and other certification details.

Power Requirements and Transformer Sizing - 1769 CompactLogix Power Supplies

1769-PA2 Output Derating

User +24V Current Draw at 0 A

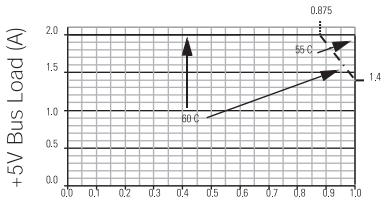

User +24V Current Draw at 0.2 A

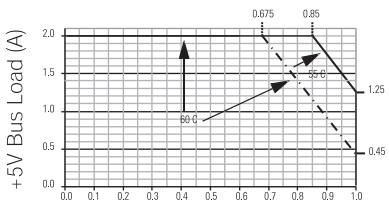

User +24V Current Draw at 0.25 A

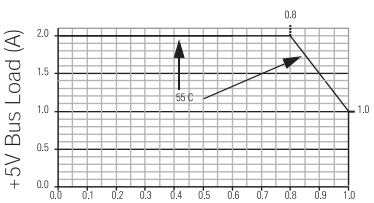

1769-PA2 Power Disspation

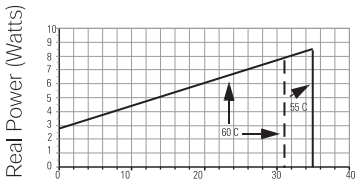

Bus +5V, +24V, and User Load (Watts)

1769-PB2 Output Derating

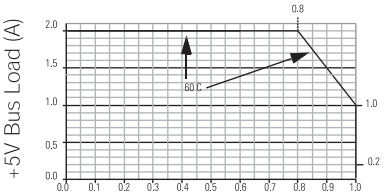

1769-PB2 Power Dissipation

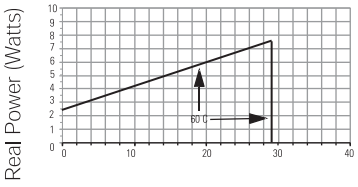

Bus +5V, +24V, and User Load (Watts)

1769-PA4 Output Derating

Total Output: 68 W @ 55 °C (131 °F) or below
61 W @ 60 °C (140 °F) or below

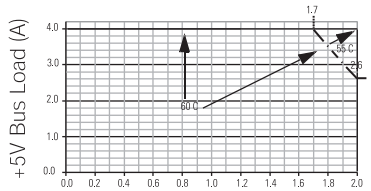

1769-PB4 Output Derating

Total Output: 68 W @ 55 °C (131 °F) or below
61 W @ 60 °C (140 °F) or below

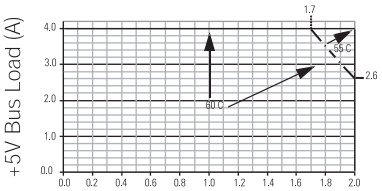

1769-PA4 Power Disspation

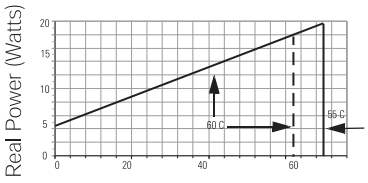

Bus +5V, +24V, and User Load (Watts)

1769-PB4 Power Disspation

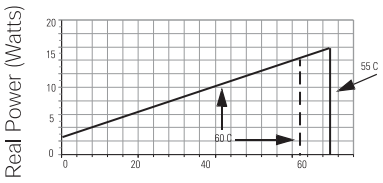

Bus +5V, +24V, and User Load (Watts)

Mounting Dimensions - 1769 CompactLogix Power Supplies

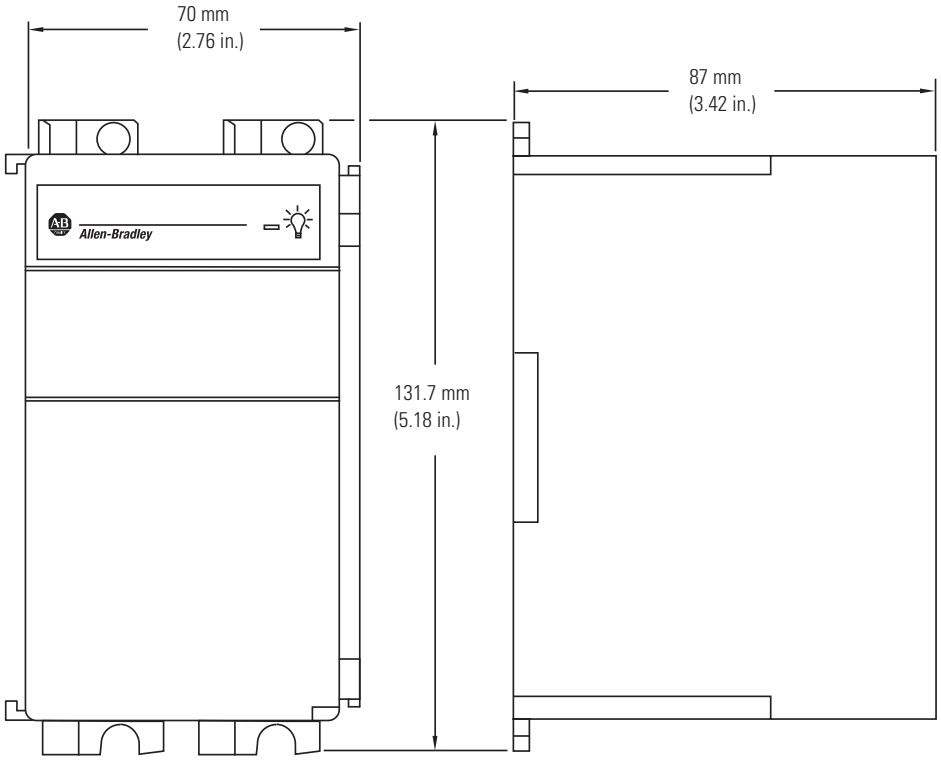

Notes:

Rockwell Automation Support

Rockwell Automation provides technical information on the Web to assist you in using its products. At http://www.rockwellautomation.com/support/, you can find technical manuals, a knowledge base of FAQs, technical and application notes, sample code and links to software service packs, and a MySupport feature that you can customize to make the best use of these tools.

For an additional level of technical phone support for installation, configuration, and troubleshooting, we offer TechConnect support programs. For more information, contact your local distributor or Rockwell Automation representative, or visit http://www.rockwellautomation.com/support/.

Installation Assistance

If you experience an anomoly within the first 24 hours of installation, review the information that is contained in this manual. You can contact Customer Support for initial help in getting your product up and running.

United States or Canada	1.440.646.3434
Outside United States or Canada	Use the Worldwide Locator at http://www.rockwellautomation.com/support/americas/phone_en.html, or contact your local Rockwell Automation representative.

New Product Satisfaction Return

Rockwell Automation tests all of its products to ensure that they are fully operational when shipped from the manufacturing facility. However, if your product is not functioning and needs to be returned, follow these procedures.

United States	Contact your distributor. You must provide a Customer Support case number (call the phone number above to obtain one) to your distributor to complete the return process.
Outside United States	Please contact your local Rockwell Automation representative for the return procedure.

Documentation Feedback

Your comments will help us serve your documentation needs better. If you have any suggestions on how to improve this document, complete this form, publication RA-DU002, available at http://www.rockwellautomation.com/literature/.

www.rockwellautomation.com

Power, Control and Information Solutions Headquarters

Americas: Rockwell Automation, 1201 South Second Street, Milwaukee, WI 53204 USA, Tel: (1) 414.382.2000, Fax: (1) 414.382.4444
Europe/Middle East/Africa: Rockwell Automation, Vorstlaan/Boulevard du Souverain 36, 1170 Brussels, Belgium, Tel: (32) 2 663 0600, Fax: (32) 2 663 0640
Asia Pacific: Rockwell Automation, Level 14, Core F, Cyberport 3, 100 Cyberport Road, Hong Kong, Tel: (852) 2887 4788, Fax: (852) 2508 1846

Publication 1769-TD008A-EN-P - January 2010

Copyright © 2010 Rockwell Automation, Inc. All rights reserved. Printed in the U.S.A.

BOM #12

Product: 1492-GS1G200

Description: 1492-GS High Density Mini Circuit Breakers (Toggle Style)

Representative Photo Only (actual product may vary based on configuration selections)

MINIATURE CIRCUIT BREAKER DATA	
Electrical Standards	UL
Number of Poles	1 pole
Magnetic Trip Range	G-Trip Characteristics - Inductive Loads (AC)
Amp Rating	20.0 A
Optional Auxiliary Contact	No Contact

CERTIFICATIONS AND APPROVALS	
UL	1077, Guide No. QVNU2, File No. E65138
CSA	22.2 NO. 235
EN	60934
CE	Marked
For UL Certifications Directory:	http://database.ul.com/cgi-bin/XYV/template/LISEXT/1FRAME/index.htm

Specifications ❶

Cat. No.	1492-GS																	
Description	High-density circuit breaker (supplementary protector) with universal mounting foot for Allen-Bradley and DIN rail mounting																	
Maximum Voltage Ratings	277/480V AC 50/60 Hz 65V DC																	
Standard Current Ratings Internal Resistance per Pole	**A** **Ω**	0.2 26	0.5 4.2	0.8 1.6	1.0 1.1	1.5 0.47	2.0 0.25	2.5 0.20	3.0 0.13	4.0 0.08	5.0 0.06	6.0 0.05	8.0 0.01	10.0 0.01	12.0 0.01	15.0 0.01	16.0 0.01	20.0 0.005	25.0 0.004
Dielectric Strength	1960V AC																	
Shock and Vibration Specifications	Shock: 25 G, 11 ms duration Vibration: 5 G (10…500 Hz)																	
Insulation Resistance	Greater than 100 MΩ @ 500V DC																	
Current Capacity of Auxiliary Contacts (N.O., N.C.)	1.0 A AC or DC (resistive load)																	
Voltage Rating of Auxiliary Contacts	277V AC 65V DC																	
Operating Life	6000 cycles @ rated current (UL 1077)																	
Temperature Range	–40…+149°F (–40…+65°C)																	
Wire Size	#22…#10 AWG (0.5…6 mm^2)																	
Recommended Wire Strip Length	0.51" (13.0 mm) for Mail Terminals 0.41" (10.4 mm) for Auxiliary Terminals																	
Recommended Tightening Torque	5 lb-in. (0.565 Nm)																	

❶ Performance Data — See page Important-2.

Approvals

- UL 1077
- CSA 22.2 NO. 235
- VDE 0631 (IEC 60934)

In North America, the Cat. No. 1492-GS circuit breaker is rated as a Supplementary Protector with a short-circuit current rating. Internationally, it is rated by IEC as a Circuit Breaker for Equipment with an interrupt rating

Electrical Characteristics

Poles	Rated Current (A)	Voltage Rating		Short-Circuit Current Rating ❶ Interrupt Rating *I*cn (IEC only)
		AC	DC	
UL 1077 Supplementary Protector Rating				
1	0.2…5	277	—	0.4 kA, U2
1	6…25	277	—	0.7 kA, U2
2, 3	0.2…5	277/480	—	0.4 kA, U2
2, 3	6…25	277/480	—	0.5 kA, U2
1, 2, 3	0.2…5	—	65	0.4 kA, U2
1, 2, 3	6…25	—	65	0.8 kA, U2
1	0.2…16	277	—	5 kA, C1
1	18…25	277	—	2 kA, C1
2, 3	0.2…16	277/480	—	5 kA, C1
2, 3	18…25	277/480	—	2 kA, C1
1	0.2…25	—	65	2 kA, C1
CSA 22.2 #235 Supplementary Protector Ratings				
1	0.2…16	277	—	5 kA, C1
1	18…25	277	—	2 kA, C1
2, 3	0.2…16	277/480	—	5 kA, C1
2, 3	18…25	277/480	—	2 kA, C1
1	0.2…25	—	65	2 kA, C1
IEC 60934 Circuit Breaker for Equipment Ratings				
1	0.2…5	250	—	0.4 kA
1	6…25	250	—	0.8 kA
2, 3	0.2…5	240/415	—	0.4 kA
2, 3	6…25	240/415	—	0.8 kA
1	0.2…5	—	65	0.4 kA
1	6…25	—	65	0.8 kA

❶ The short-circuit current rating is followed by a letter and number designating the test conditions and any calibrations and dielectric tests following the short-circuit test. These designations are defined as follows (see ❷ also):
C — Indicates that the short-circuit test was conducted with series overcurrent protection
U — Indicates that the short-circuit test was conducted without series overcurrent protection
1 — Indicates that a recalibration and dielectric test was not conducted as part of the short-circuit test
2 — Indicates that a recalibration and dielectric test was conducted as part of the short-circuit test

❷ These alphanumeric designations were established by UL. CSA has not yet adopted them; however, the test conditions are equivalent to UL and the coding is appropriate.

http://raise.rockwellautomation.com/raconfig/rtcache/jpg/1492gs.jpg[10/7/2015 4:09:21 PM]

BOM #13

COOPER Bussmann

Compact Modular Fuse Holders

COOPER Bussmann

DIN-Rail Mount Fuse Holders Protect Your Electrical System and Simplify Installation

- Colour coded for simple visual identification: yellow for **PV (1000Vdc)**, red for **IEC (690Vac)** and **black** for **UL (600Vac/dc)** applications.
- CHPV Models, with 1000Vdc rating for use with solar gPV fuse links, are suitable for photovoltaic applications of any size.
- Tested to a wide range of standards: IEC, cULus, CCC, CSA and UR, allowing for use across global applications.
- World class space-saving footprint - smaller than any other Modular Fuse Holder, reducing required installation space.
- Toolless DIN-Rail mounting improves ease of use and reduces installation time and costs.
- Rated for use with 75ºC or 90ºC wire, fine stranded wire, spade terminals and with comb-bus bars. Use any higher temperature rated wire with appropriate derating.

PV IEC UL

For more information visit www.cooperbussmann.com/ModularFuseHolders

Modular Fuse Holder Selection Table (10 x 38, Photovoltaic and Class CC)

Series & Size	Catalogue Number		Rated Voltage & Rated Current	Agency Markings	Number of Poles	Terminal Rating	Rated Breaking Capactiy	Cooper Bussmann Fuse Links
	With Indicator	Without Indicator						
CHM 10x38 and Midget	CHM1DIU	CHM1DU	IEC 690Vac/32A UL 600Vac/30A;	IEC 60269-2 UR; CSA; CCC	1	IEC: 1 to 25mm² 70°C PVC/Copper Cable Solid, Stranded, Fine Stranded, Spade Lug, Comb Bus Bar; Single and Dual	IEC 120kA rms sym UL 200kA rms sym CCC 100kA rms sym	IEC: C10 Series UL: FNQ, KLM, FNM, KTK, BAF, FWA, PVM, AGU, BAN, FWC.
	CHM2DIU	CHM2DU			2			
	CHM3DIU	CHM3DU			3			
	CHM4DIU	CHM4DU			4			
	CHM1DNIU	CHM1DNU		IEC 60269-2	1-pole + 1 neutral			
	CHM3DNIU	CHM3DNU			3-pole + 1 neutral			
	CHM1DI-48U	N/A	IEC 48Vdc/32A UL 48Vdc/30A;	IEC 60269-2; UR; CSA; CCC	1			
	N/A	CHM1DNXU	IEC 690Vac/32A	IEC 60269-2	1 neutral		N/A	N/A
CHPV Photovoltaic	CHPV1IU	CHPV1U	IEC 1000Vdc/32A UL 1000Vdc/30A;	IEC 60269-1 UR; CSA; CCC UL4248-18	1		33kA	Solar PV series, PVM, PV-xxA10F
	CHPV2IU	CHPV2U			2			
CHCC Class CC	CHCC1DIU	CHCC1DU	UL 600Vac/dc 30A	UL; CSA; CCC	1	Cable 75°C and 90°C Cu cable	200kA rms sym	LP-CC, FNQ-R, KTK-R
	CHCC2DIU	CHCC2DU			2			
	CHCC3DIU	CHCC3DU			3			
	N/A	CHCC1DI-48U	UL 48Vdc/30A		1			

Features

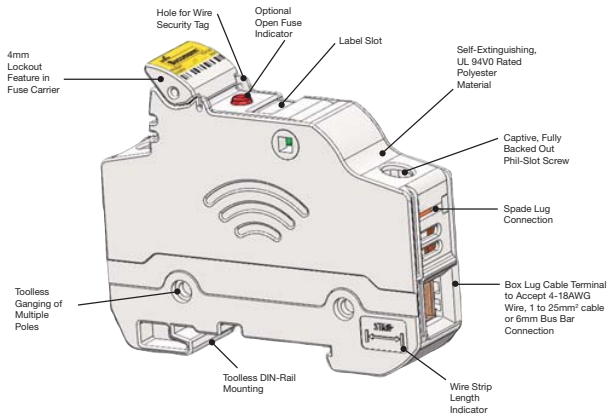

Specifications

Temperature Operating Range:
-20°C to +120°C (non-indicating)
-20°C to +90°C (indicating)
Flammability: Self-extinguishable UL 94V0 rated

Comb Bus Bar & Power Feed Accessories Make Installation Easier

- Distributes power in single- or three-phase configurations
- Cut-to-length solution does not compromise finger-safe protection
- Single-phase bus bars rated to 1000Vdc and 100A in end-fed configuration (200A for center-fed configuration)
- Three-phase bus bars rated to 600Vac/dc and 100A in end-fed configuration (200A for center-fed configuration)
- Power feed terminals for single-phase and three-phase service

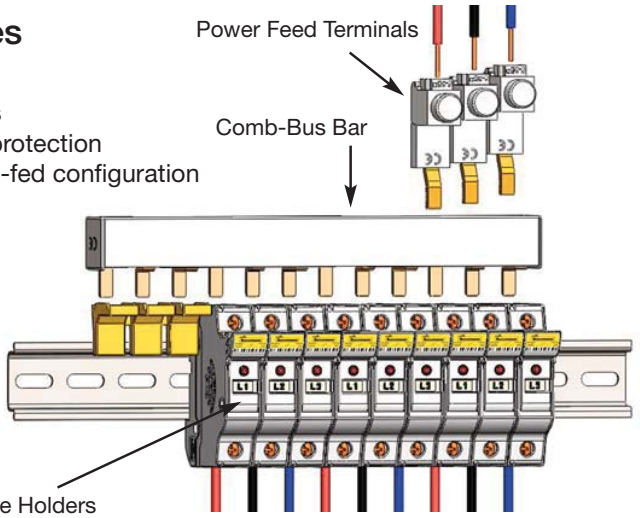

© 2012 Cooper Bussmann
www.cooperbussmann.com

COOPER Bussmann

Transient Voltage Surge Suppression Limiters TVSS

Time-Current Characteristic Curves–Average Melt

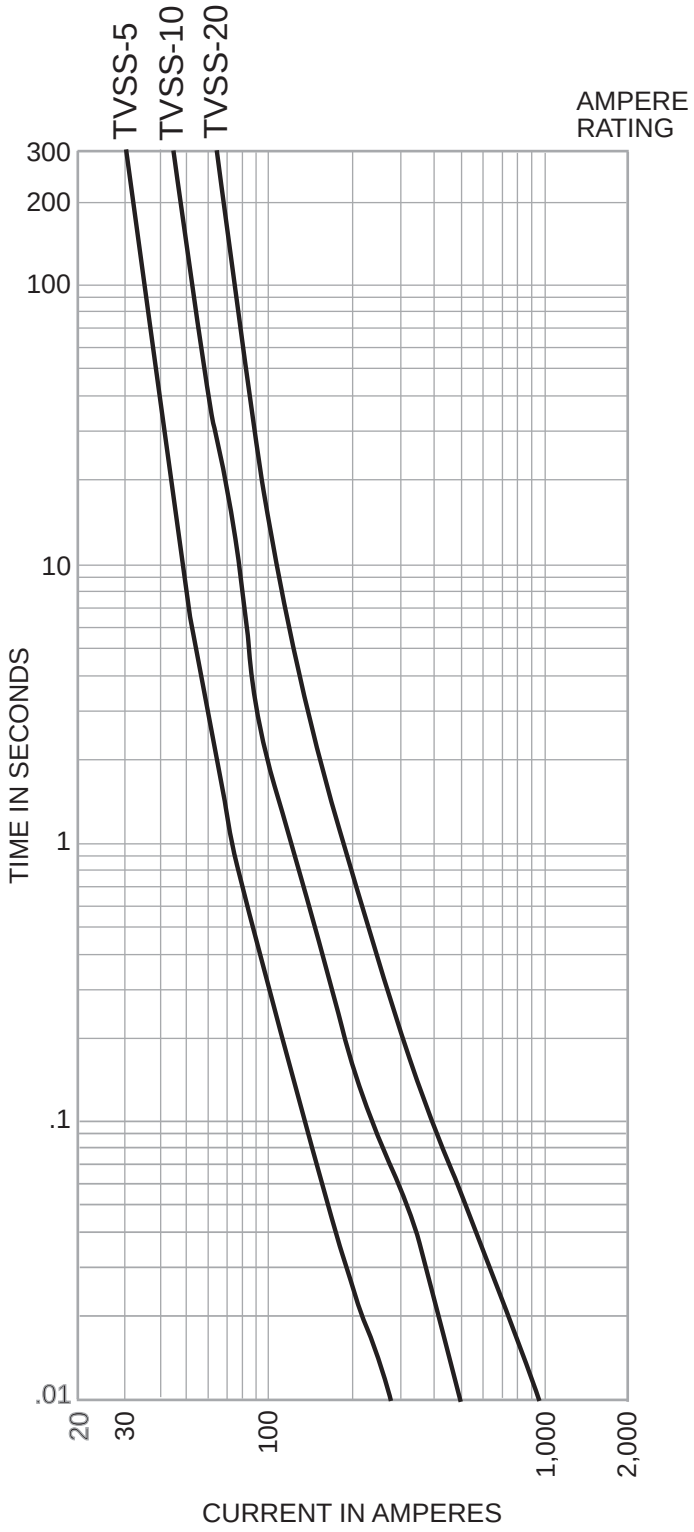

Time-Current Characteristic Curves–Peak Let-Through

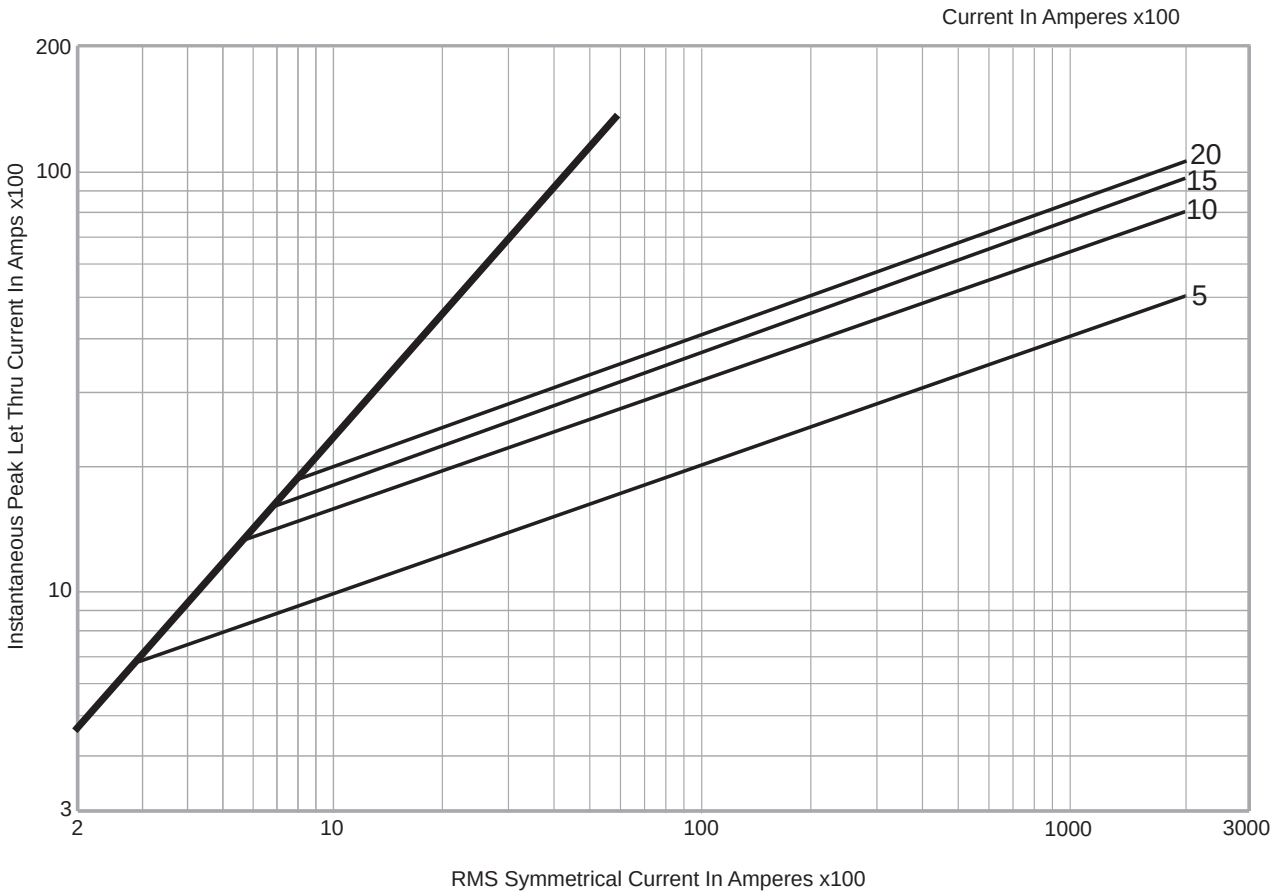

The only controlled copy of this Data Sheet is the electronic read-only version located on the Bussmann Network Drive. All other copies of this document are by definition uncontrolled. This bulletin is intended to clearly present comprehensive product data and provide technical information that will help the end user with design applications. Bussmann reserves the right, without notice, to change design or construction of any products and to discontinue or limit distribution of any products. Bussmann also reserves the right to change or update, without notice, any technical information contained in this bulletin. Once a product has been selected, it should be tested by the user in all possible applications.

DIN-Rail TVS Series

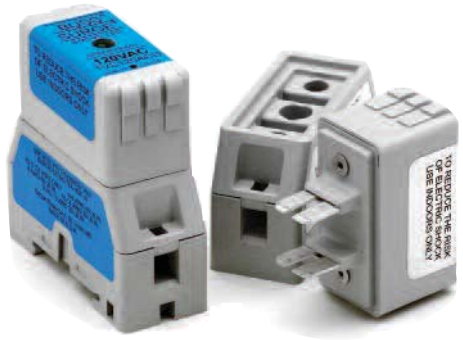

Status LED

OFF - Suppressor Non-Operational (power may be on)
GREEN - Suppressor Operational (power on)

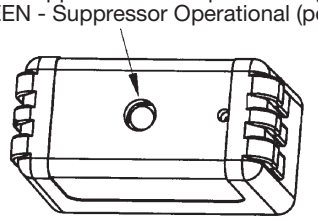

Specifications

Description: DIN-Rail mount voltage surge protection system for AC or DC voltage using diode or MOV technology.

Construction:

Suppressor: Case: 20% glass filled PES (Polyethersulfone)
Terminals: 110 Copper
Terminal Plating: Electroless tin

Holder: Case: 15% glass filled PBT (Polybutylene Terephthalate)
Interface Clips: CDA 7025
Interface Clip Plating: Electroless tin
Contact Lubricant: Fluoroether grease
Box Lug: Copper
DIN-Rail Springs: Stainless steel

Ratings*:

Volts: — 12Vdc (2kA surge current)
— 24Vdc (2kA surge current)
— 48Vdc (2kA surge current)
— 120Vac (7kA-18kA surge current)
— 240Vac (7kA-18kA surge current)

* See Catalog Numbers table for all specifications pertaining to specific voltage ratings.

Agency Information: UL Recognized (UL 1449) for AC products, (UL 497B) for DC products, CSA Approved.

Dimensions -in

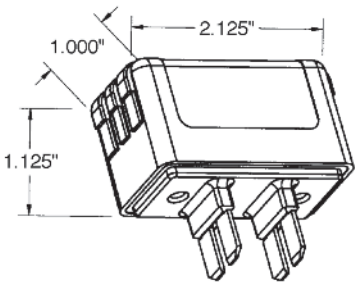

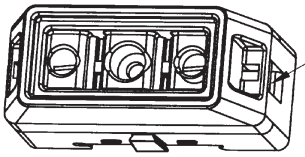

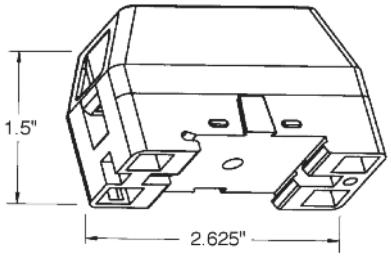

Product Specifications:

1. All TVS devices have non-polarized electrical connections as shown.
2. Suppressor voltage characteristics per chart.
3. Suppressor to provide non-interrupted service.
4. Enclosure material is 94V0 flame and explosion resistant.
5. Product markings show manufacturer, part number and safety warnings as required.
6. Mechanical dimensions as noted.
7. Suppressor Status LED as shown.
8. AC units operate on either 50 or 60Hz.

Catalog Numbers

Catalog Numbers	Voltage Application	MCOV	Technology	SVR 500A, 8x20μs	Surge Current Rating	Agency Information	Label Color
TVS12DCD	12Vdc	14Vdc	SASD	36Vdc	2kA	UL 497B	Red
TVS24DCD	24Vdc	28Vdc	SASD	58Vdc	2kA	UL 497B	White
TVS48DCD	48Vdc	57Vdc	SASD	90Vdc	2kA	UL 497B	Black
TVS120ACD	120Vac	140Vac	SASD	330Vac	7kA	UL 1449	Blue
TVS120ACM	120Vac	140Vac	MOV	500Vac	18kA	UL 1449	Grey
TVS240ACD	240Vac	280Vac	SASD	600Vac	7kA	UL 1449	Blue
TVS240ACM	240Vac	280Vac	MOV	800Vac	18kA	UL 1449	Grey

Data Sheet: 9006

BOM #15

Product: 1492-GH100

Description: 1492-GH High Density Mini Circuit Breakers (Push to Set)

Representative Photo Only (actual product may vary based on configuration selections)

MINIATURE CIRCUIT BREAKER DATA	
Electrical Standards	UL
Amp Rating	10.0 A

CERTIFICATIONS AND APPROVALS	
UL	1077, Guide No. QVNU2, File No. E65138
CSA	22.2 NO. 235
VDE	0631 (EN 60934)
CE	Marked
For UL Certifications Directory:	http://database.ul.com/cgi-bin/XYV/template/LISEXT/1FRAME/index.htm

BOM #16

SOLAHD

Dry Contact Relay Kit

RELAYCARD-SDU

Instruction Manual

While every precaution has been taken to ensure accuracy and completeness in this manual, SolaHD assumes no responsibility, and disclaims all liability for damages resulting from use of this information or for any errors or omissions.

©2009 SolaHD. All rights reserved throughout the world. Specifications are subject to change without notice.

®SolaHD name and logo are registered trademarks of EGS Electrical Group, LLC. All names referred to are trademarks or registered trademarks of their respective owners.

Table of Contents

What's Included 4

Installation 4

Product Description 5–6

Notes 7

What's Included

- One dry contact relay box
- One interface cable (DB-9 connector)
- One 12 V dc power interconnection cable
- Four M3 mounting screws

Installation

⚠ DANGER **Only qualified personnel should install or service this system. Electrical safety precautions must be followed when installing or servicing this equipment. To prevent risk of electrical shock, turn off and lock out all power sources to the unit before making electrical connections.**

1. Using the four M3 screws provided, mount the dry relay box on the right side of the SDU UPS. If mounting on a separate chassis, the hole diameter for the relay box is 0.378 in. (3.5 mm).

2. Plug the 12 V dc power interconnection cable into the 12 V dc input of the relay box. Plug the other end of the power interconnection cable into the aux dc output (or Vout) of the SDU UPS.

3. Plug the DB-9 connector cable into the RS232 communication port of the SDU UPS. Plug the other end of the connector into the remote port of the dry contact relay.

Product Description

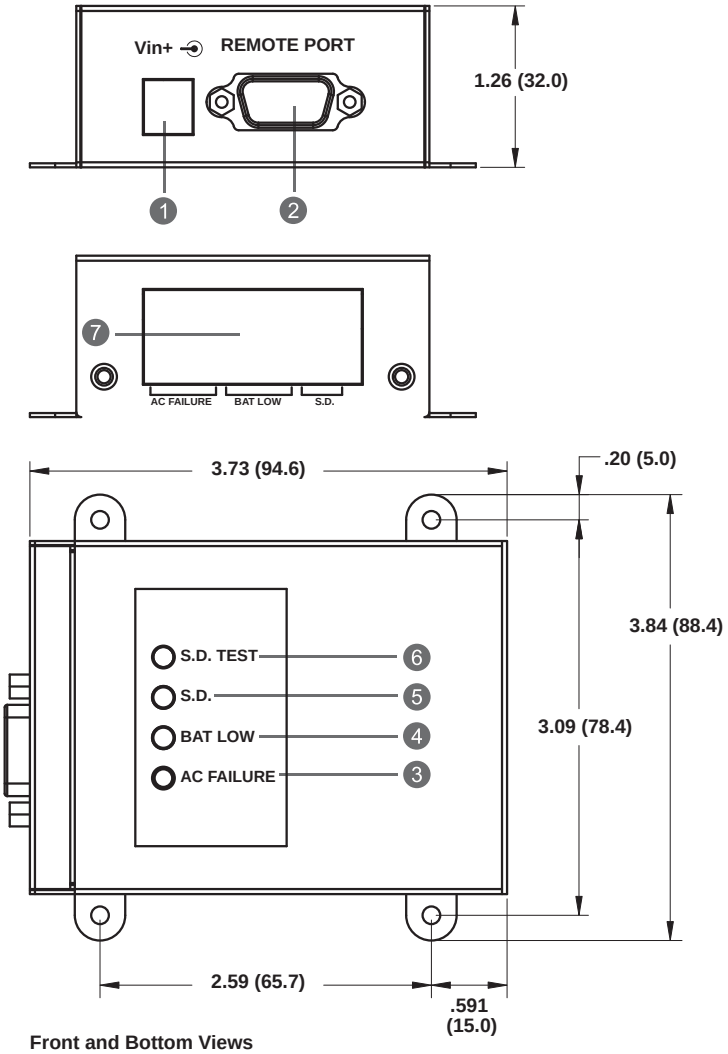

Front and Bottom Views
All dimensions are in inches (mm)

1. **Vin:** Input connector used to provide the dry contact relay with 12 V dc input power.
2. **Remote Port:** This communication port is used for linking to the SDU UPS.

   NOTE: The provided connection cable is used only for this dry contact relay.
3. **Ac Failure Indicator:** This yellow LED is illuminated when ac voltage is abnormal.
4. **Battery Low Indicator:** This green LED is illuminated when battery capacity is low.
5. **Shut Down Indicator (S.D.):** When the dry contact relay receives the shut down signal for 1 second, the red LED is illuminated and the SDU UPS goes into shut down mode.

Product Description continued from page 5

6. Shut Down Test Button (S.D. Test): Provides the dry contact relay a shut down signal to test the shut down function when the UPS is operating in the battery mode. Push this button for 1 second and the red LED is illuminated. The SDU UPS goes into shut down mode after 3 minutes.

7. 8 Pole Terminal Blocks

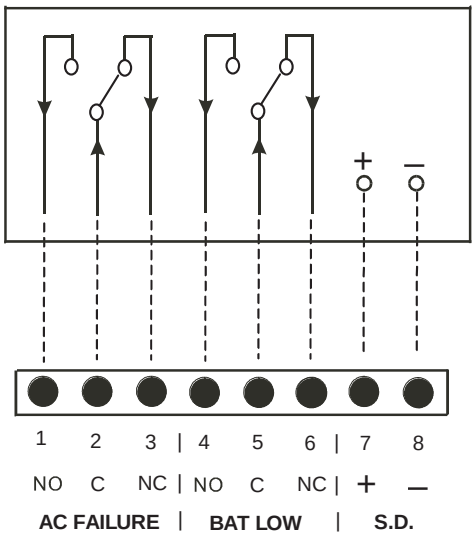

Table 1: Terminal Blocks—Layout and Operation

+UPS State		External Input	DCB LED Display			Terminal Blocks			
O = Occur X = Does not occur		O = Enable X = Disable	O = LED On X = LED Off			O = Close X = Open			
Ac Failure	BAT Low	S.D.	Yellow	Green	Red	Pin 1–2	Pin 2–3	Pin 4–5	Pin 5–6
X	X	X	X	X	X	X	O	X	O
O	X	X	O	X	X	O	X	X	O
O	O	X	X	O	X	O	X	O	X
O	X	O	X	X	O	X	O	X	O

Notes

1. Suitable electric wire = AWG 22–12 (IEC 2.5 mm).

2. Contact maximum current = 1.0 A @ 250 V ac.

3. Shut down input signal (range = +5 V to +12 V) can be provided by enabling terminals 7 and 8 for remote shut down control, assured by an external remote device.

SOLAHD

Technical Support
U.S.: (800) 377-4384
International: (847) 268-6000
E-mail: www.tech@solahd.com
Web site: www.solahd.com

EMERSON™
Industrial Automation

Part Number: A272-081 Rev 7
May 20, 2009

SDU Series, DIN Rail AC UPS

The SDU DIN Rail UPS combines an industry leading compact design with a wide operation temperature range and unique installation options. The SDU series provides economical protection from damaging impulses and power interruptions. These units include easy to wire screw terminations for critical devices needing battery back up such as computer based control systems.

E179213

Applications

- Programmable Logic Controllers
- Factory Automation
- Robotics
- Conveying Equipment
- Computer-based Control Systems

Features

- Lightweight, compact industrial design
- Wide operation temperature range (0ºC to 50ºC)
- Cold start capability
- Phone/dataline surge protection
- Software and cable included for easy installation
- Simulated sinewave output
- RS232 communication port
- USB communication port (optional)
- Form C dry contact relay (optional)
- Panel/wall mounting brackets (optional)
- Remote turn-on and shut-off capabilities
- Two year limited warranty

Certifications and Compliances

120V Models

- c UL us UL Recognized Component, UPS Equipment
  - UL 60950-1/CSA C22.2 No. 60950-1
  - Suitable for UL 508, CSA C22.2 No. 107.1 Ind. Control Equipment Applications with no derating
    - Overvoltage Cat III, Pollution Degree III

230V Models

- CE
  - EN62040-1-1

Related Products

- Portable MCR Power Conditioners
- STV Surge Protective Devices
- SDN DIN Rail Power Supplies
- STFV Plus Active Tracking® Filters

Selection Table

Capacity (VA/W)	Catalog Number	Volts, Frequency In/Out	Typical Back–up Time (minutes) *	Input/Output Connections	Approx. Ship Weight – lbs (kg)
500/300	**SDU 500**	120 Vac, 50/60 Hz	4	IP20 touch proof, screw terminals. Wire range: 10 ~ 24 AWG.	10.7 (4.70)
850/510	**SDU 850**		2		11.4 (5.00)
500/300	**SDU 500–5**	230 Vac, 50/60 Hz	4		11.5 (5.20)
850/510	**SDU 850–5**		2		11.9 (5.40)

* At full load.

SDU Accessories

Catalog Number	Description	Approx. Ship Weight – lbs (kg)
RELAYCARD–SDU	Dry contact I/O relay box, IP20 touch proof screw terminals, wire size range 12~22 AWG (IEC 2.5mm); N.O./N.C. form "C" contact. Relay contact signal for "On Battery", "Low Battery" and "UPS Shutdown".	1.0 (0.45)
UPSMON–USB	RS232 to USB adapter cable	1.0 (0.45)
SDU–PMBRK	Mounting brackets to secure UPS to wall, back of panel or enclosure.	1.0 (0.45)

Specifications

Catalog Number	SDU 500	SDU 850	SDU 500–5	SDU 850–5
Capacity (VA/Watts)	500/300	850/510	500/300	850/510
Load Power Factor	0.6			
Dimensions – inches (mm)				
Unit (H x W x D) – in. (mm)	4.88 x 11.1 x 4.55 (124.0 x 281.0 x 116.0)			
Weight – lbs (kg)	10.7 (4.70)	11.4 (5.00)	11.5 (5.20)	11.9 (5.40)
Input Parameters				
Voltage	120 V (+10%, -20%)		230 V (+/- 20%)	
Frequency	50 +/- 5 Hz or 60 Hz +/- 6 Hz (auto sensing)			
Output AC Parameters				
Voltage (Battery Mode)	Step sinewave			
	+/- 5%			
Frequency (On Battery)	50 or 60 Hz			
	+/- 0.3 Hz			
Overload Protection	UPS automatic shutdown if overload exceeds 105% of nominal at 20 seconds, 120% at 10 seconds, 130% at 3 seconds			
Short Circuit	UPS output cut off immediately			
Battery Parameters				
Battery Type	Sealed, non-spillable, maintenance-free lead acid batteries			
Transfer Time	4 - 6 ms typical			
Back–up Time * (minutes)	4.5/18	2.5/10	4.5/18	2.5/10
Recharge Time	8 hours to 90% capacity after full discharge			
Environmental				
Operating Temperature	0°C to 50°C			
Storage Temperature	-15°C to 60°C			
Relative Humidity	1% to 95%, non-condensing			
Ambient Operation	1-95% humidity non-condensing, 0-50°C up to 5,000 ft. (1500m)			
Audible Noise	< 40dBA (1 meter from surface)			
Standards				
EMC	FCC Part 15, Subpart B, Class A; EMC: EN50091-2, EN61000-3-2, EN61000-3-3, IEC60801-2, IEC60801-3, IEC60801-4, IEC61000-2-2			
Elevation	5000 ft. without derating			
Shock & Vibration	According to the International Safe Transit Association standard ISTA 2A.			
Mounting	To be mounted on DIN TS35/7.5 or TS35/15 rail system. Chassis mounting permissible via optional brackets. Unit handles normal shock and vibration of industrial use and transportation without coming off rail.			

* At full load/half load.

BOM #19
TAGS: LSHY-4001
LSHY-4002
LSHY-5001
LSHY-5002
LSHY-6001
LSHY-7001
LSHY-7002

Warrick

Series 16DM

Series 16DM DPDT Load Contact, Solid State Plug-In Module

Part No. 16DMB1B0
Unit Price $267
Lead Time (Days) 5

Image is of actual product

Model	16DM
Mode of Operation	Direct
Sensitivity	10 K
Control Style	Plug-In Module
Socket Style	DIN Mount
Standoff Style	N/A
Enclosure	None
Contact Design	2 Normally Open & 2 Normally Closed (non-powered)
Contact Rating	5 Amp Resistive 1/10 horse power
Secondary Voltage	12 VAC
Terminal Style	Screw Connector
Number of Channels	1
Minimum Temperature (°F)	-40
Maximum Temperature (°F)	150
Protection	Non-Intrinsically Safe
Approvals	UL 508 General Purpose
Minimum Qty (per Release)	1
Weight (Lbs)	1.1

Options

Warrick® Series 16DM Controls

Installation and Operation Bulletin

This bulletin should be used by experienced personnel as a guide to the installation of series 16DM controls. Selection or installation of equipment should always be accompanied by competent technical assistance. We encourage you to contact Gems Sensors Inc. or its representative if further information is required.

	Specifications
Control Design:	Solid-State components enclosed in clear Lexan plug-in style housing. Housing carries no NEMA rating
Contact Design:	2 SPDT (2 form C): Two Normally Open (N.O.) and two Normally Closed (N.C.), non-powered contacts
Contact Ratings:	5 A @ 120, 240 VAC resistive, 1/8 H.P. @ 120 or 240 VAC
Contact Life:	Mechanical: 5 million operations - Electrical: 100,000 operations minimum at rated load
Supply Voltage	24, 120, or 240 VAC Models - Factory Set. Plus 10%, minus 15%, 50/60 Hz
Supply Current:	120, 240, 24 VAC, Relay energized 4.4 VA
Secondary	12 VAC RMS Voltage on probes. 1.5 milli-amp Current
Circuit:	Models operate from 0 to 1,000,000 OHM maximum
Sensitivity:	specific resistance - Factory set
	-40° To 150°F Ambient
Temperature:	All connections #6-32 screw type with pressure clamps
Terminals:	Standard, 0.5 seconds on rising level.
Time Delays:	Additional time delays on rising and/or falling level available as option.
Listings:	U.L. Listing, Industrial Motor Control (508). 240 and 208 volt units are not U.L. limit control recognized.

Installation

1. Install octal socket in appropriate enclosure using two #6 or #8 metal screws.
   a) Install rail mount socket on appropriate rail (DIN mount) in appropriate enclosure, if applicable.
2. Wire control per wiring diagram, following N.E.C. and local codes.
3. Install control module in socket.

Sensitivities vs Maximum Probe Wire Distance*

Sensitivity Character	Sensitivity (K Ohms)	Distance (Ft.)
A or K	4.7	10,000
B or L	10	5,700
C or M	26	2,200
D or N	50	1,075
E or P	100	570
F or R	470	270
G or S	1,000	38

* Based on type MTW or THHN wire, #14 or #16 Awg

Dimensions

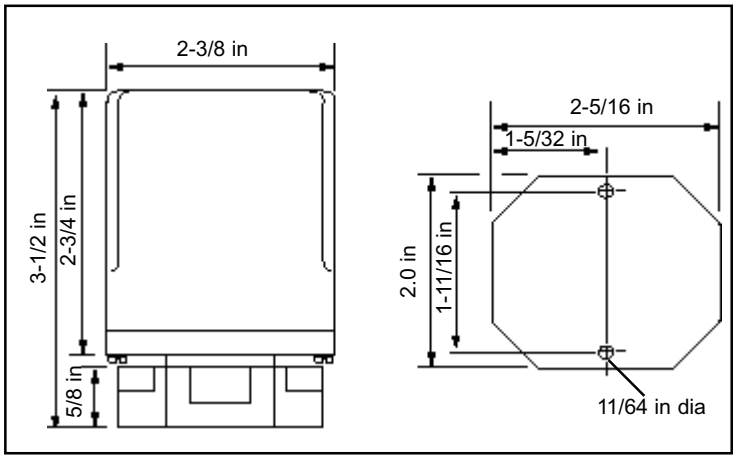

Use copper (60/70° C) wire only. Torque to 20 inch pounds.

Wiring Diagram

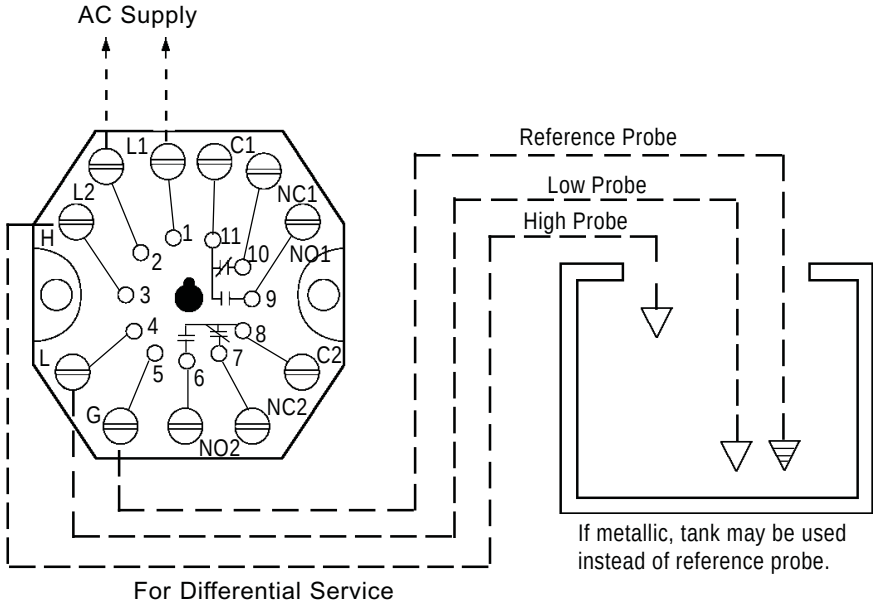

Note: For Single Level Service, use "H" and "G" Connections

Operation

Direct Mode - Single Level Service:
When the liquid rises to the electrode on terminal 3, the control energizes, changing state of the load contacts. **(LED will be lit)** The control remains energized until the liquid level recedes below electrode on terminal 3. The control then de-energizes, **(LED will not be lit)** returning load to original state.

Inverse Mode - Single Level Service:
Control energizes with power, changing state of the load contacts. **(LED will be lit)** When the liquid rises to the electrode on terminal 3, the control de-energizes, returning the load contacts to shelf state. **(LED will not be lit)** The control remains de-energized until liquid level recedes below the electrode connected to terminal 3. The control then energizes.

Direct Mode - Differential Service:
When the liquid rises to the electrode on terminal 3, the control energizes, changing state of the load contacts. **(LED will be lit)** The control remains energized until the liquid level recedes below electrode on terminal 4. The control then de-energizes, **(LED will not be lit)** returning the load contacts to original state.

Inverse Mode - Differential Service:
Control energizes with power, **(LED will be lit)** changing state of the load contacts. When the liquid rises to the electrode on terminal 3, the control de-energizes, returning load contacts to shelf state. **(LED will not be lit)** The control remains de-energized until the liquid level recedes below the electrode on terminal 4. The control then energizes.

Optional

Time Delays: With time delay on increasing level, the liquid must be in contact with the short electrode for the full duration of the time delay before control will operate. With delay on decreasing level, the liquid must be below long electrode for the full duration of the time delay before control will operate. In single level service, terminals 3 and 4 must be jumpered together to achieve time delays on both increasing and decreasing levels or just decreasing level.

16DM B 1 B **-XX-XX**

Time Delay: (decreasing level) 1-20 sec.
Time Delay: (increasing level) 1-20 sec.
Enclosure: 0-none, 1-NEMA 1, 4-NEMA 4, 7-NEMA 7, 12-NEMA 12
Socket Style: A - 11 Pin Octal, B - 11 Pin DIN Mount, M - None, Module Only
Supply Voltage: 1- 120 VAC, 2- 240 VAC, 3- 24 VAC, 8- 208/240 VAC*
Mode/Sensitivity:
Direct A- 4.7K, B- 10K, C- 26K, D- 50K, E- 100K, F- 470K, G- 1M
Inverse K- 4.7K, L- 10K, M- 26K, N- 50K, P- 100K, R- 470K, S- 1M

*187 Vmin to 255 Vmax VAC

Gems Sensors Inc.
One Cowles Road
Plainville, CT 06062-1198
Tel: 860-793-4579
Fax: 860-793-4580

Product: 700-HK32A1

BOM #21

Description: 700-HK General Purpose Slim Line Relay

Representative Photo Only
(actual product may vary based on configuration selections)

CONTROL RELAY DATA

Contact Rating	8 Amp Contact (Slim Line Relay)
Contact Configuration	DPDT Contact Arrangement
Coil Voltage	120V 50/60Hz
Relay Option	No Additional Options

CERTIFICATIONS AND APPROVALS

CE	Marked
UL	Listed with socket, Guide No. NLDX, File No. E3125
UR	Recognized, Guide No. NLDX2, File No. E3125
CSA	
For UL Certifications Directory:	http://database.ul.com/cgi-bin/XYV/template/LISEXT/1FRAME/index.htm

		Cat. No. 700-HK...			
Electrical Ratings					
Rated Thermal Current (I^{th})		1-Pole, 1 CO, SPDT — 16 A		2-Pole, 2 CO, DPDT — 8 A	
Rated Insulation Voltage (U_i)		250V IEC, 300V UL/CSA			
Contacts	Inductive V AC	120V AC	AC-15, 6.2 A B300 Pilot Duty, 3 A A300 (700-HKM_) 1/3 Hp (0.24 kW) 1-phase	120V AC	AC-15, 2.9 A B300 Pilot Duty, 3.0 A 1/4 Hp (0.18 kW), 1-phase
		240V AC	AC-15, 3.1 A B300 Pilot Duty, 1.5 A A300 (700-HKM_) 3/4 Hp (0.55 kW), 1-phase	240V AC	AC-15, 1.4 A B300 Pilot Duty, 1.5 A 1/2 Hp (0.37 kW), 1-phase
		230V AC	0.55 kW, 1-phase	230V AC	0.37 kW, 1-phase
	Inductive V DC	24V DC	DC-13, 5.0 A	24V DC	DC-13, 3.0 A
		125V DC	DC-13, 0.2 A R300 Pilot Duty, 0.22 A	125V DC	DC-13, 0.2 A R300 Pilot Duty, 0.22 A
		250V DC	DC-13, 0.1 A R300 Pilot Duty, 0.11 A	5 A, 250V AC	DC-13, 0.1 A R300 Pilot Duty, 0.11 A
	Resisitive	230V AC	AC-1, 16 A	230V AC	AC-1, 8 A
		277V AC	16 A, General Use	277V AC	8 A, General Use
	Make, Break & Continuous	30V DC	DC-1, 12 A 10 A, Resistive	30V DC	DC-1, 6 A 6 A, Resistive
Min. Permissible Contact Ratings		300 mW (5V/60 mA or 60V/5 mA) for AgNi Contacts (700-HK3_) 50 mW (5V/10 mA or 25V/2 mA) for AgNi + Gold Contacts (700-HKX_) 500 mW (100V/5 mA or 5V/100 mA) for $AgSnO_2$ Contacts (700-HKM_)			
Permissible Coil Voltage Variation	Pickup: holding Voltage: Must Dropout Voltage:	80...110% of Nominal Voltage at 50/60 Hz, 73...110% of Nominal Voltage at DC 80% of Nominal V AC at 50/60 Hz, 40% of Nominal V DC 20% of Nominal V AC at 50/60 Hz, 10% Nominal V DC			
Power Consumption		1.2V A (V AC Coils), 0.5 W (V DC Coils)			
Coil Voltages		See Overview/Product Selection			
Design Specification/Test Requirements					
Dielectric Withstand Voltage	Between Open Contacts (VRMS)	1000V AC			
	Contact to Coil (VRMS)	1600V AC			
Mechanical					
Degree of Protection		IP 20 (guarded terminal sockets), RT II — Flux-proof (Relay)			
Mechanical Life Operations		10 x 10^6			
Electrical Life Cycles		230V AC, 16 A Resistive: 100 000 min. 277V AC, 16 A Resistive: 30 000 min. 30V DC, 10 A Resisitive: 30 000 min. B300, R300, Hp (kW): 6000 min. A300 (700-HKM_): 100,000 min.		230V AC, 8 A Resistive: 100 000 min. 277V AC, 8 A Resistive: 30 000 min. 30V DC, 6 A Resistive: 30 000 min. B300, R300, Hp (kW): 6000 min.	
Switching Frequency		Mechanical: 18,000 cycles/hr. Electrical: 900 cycles/hr.			
Operating Time at Nominal Voltage at 20 °C (ms)	Pickup	15 ms max.			
	Dropout	5 ms max.			
Vibration	Operational	10...2000 Hz, 0.76 mm (0.03 in.) 2.5 G			
	Non-Operational	10...2000 Hz, 0.76 mm (0.03 in.) 5.0 G			
Shock	Operational	15 G			
	Non-Operational	50 G			
Environmental					
Temperature	Operating	–40...+70 °C (–40...+158 °F)			
	Storage	–40...+85 °C (–40...+185 °F)			
Altitude		2000 m (6560 ft)			
Construction					
Insulating Material		Molded High Dielectric Material			
Enclosure		Transparent Dust Cover			
Contact Material		700-HK3_: Silver nickel (AgNi); 700-HKX_: Silver Nickel + Gold Plating (AgNi + Au); 700-HKM_: Silver Tin Oxide ($AgSnO_2$)			
Terminal Markings on Socket		In accordance with EN 50005			
Sockets		**1-Pole**		**2-Pole**	
	Screw Terminal	700-HN121 (10 A @ 70 °C) 700-HN221 (16 A @ 50 °C, 12 A @ 70 °C)		700-HN122 (2 x 5 A @ 70 °C) 700-HN222 (2 x 8 A @ 70 °C)	
	Spring Clamp (Available September 2006)	700-HN223 (15 A @ 40 °C with 2 conductors per terminal) (10 A @ 70 °C with 1 conductor per terminal)		700-HN224 (2 x 8 A@ 70 °C)	
Approvals					
Certifications		CSA Certified, File 75088, UL Recognized, File E3125 Guide NLDX2/NLCX8, cULus Listed with Allen-Bradley sockets (File No. 3125 Guide NLDX/NLDX7), CE Marked			
Standards		EN61810-1, CSA 22.2 No. 14, UL 508			

http://raise.rockwellautomation.com/raconfig/rtcache/jpg/700-hk%20specs.jpg[10/7/2015 4:14:36 PM]

BOM #22 and 23

Spring-Clamp Connection Terminal Blocks

Plug-in Style Blocks (Cat. Nos. 1492-L3P, -LDG3P) and Analog Loop Control Block (Cat. No. 1492-LDAG3)

	1492-L3P			1492-LDG3P			1492-LDAG3		
Dimensions are not intended to be used for manufacturing purposes. **Note:** Height dimension is measured from top of rail to top of terminal block.	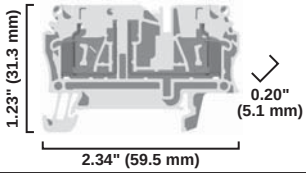			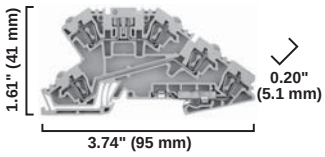			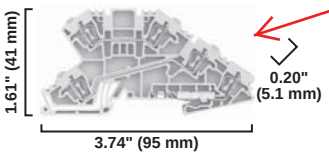		
Specifications	*Single Circuit Plug-In Component Block for a Variety of Components*			*Terminal Block with slot for Plug-In Component, Feed-Through Circuit and 1 Ground Connection*			*Analog Loop Control Terminal Block with 2 Feed-Through Circuits and 1 Ground Connection*		
Certifications	cULus	CSA	IEC	cULus	CSA	IEC	cULus	CSA	IEC
Voltage Rating	600V AC/DC		500V AC/DC	300V AC/DC		250V AC/DC	300V AC/DC		250V AC/DC
Maximum Current	20 A		24 A	10 A		20 A	10 A		24 A
Wire Range (Rated Cross Section)	#30…12 AWG		4 mm²	#26…12 AWG		2.5 mm²	#26…12 AWG		2.5 mm²
Wire Strip Length	0.39 in. (10 mm)			0.31 in. (8 mm)			0.31 in. (8 mm)		
Density	59 pcs/f (/196 pcs/m)			59 pcs/ft (196 pcs/m)			59 pcs/ft (196 pcs/m)		
Housing Temperature Range	–58…+248 °F (–50…+120 °C)			–58…+248 °F (–50…+120 °C)			–58…+248 °F (–50…+120 °C)		
Terminal Blocks	**Cat. No.**		**Pkg Qty.**	**Cat. No.**		**Pkg Qty.**	**Cat. No.**		**Pkg Qty.**
Color Grey	**1492-L3P**		25	**1492-LDG3P**		25	**1492-LDAG3**		25
Accessories	**Cat. No.**		**Pkg Qty.**	**Cat. No.**		**Pkg Qty.**	**Cat. No.**		**Pkg Qty.**
Mounting Rails 1 m Symmetrical DIN (Steel)	**199-DR1**		10	**199-DR1**		10	**199-DR1**		10
1 m Symmetrical DIN (Aluminum)	**1492-DR5**		10	**1492-DR5**		10	**1492-DR5**		10
1 m Hi-Rise Symmetrical DIN (Aluminum)	**1492-DR6**		2	**1492-DR6**		2	**1492-DR6**		2
1 m Angled Hi-Rise Sym. DIN (Steel)	**1492-DR7**		2	**1492-DR7**		2	**1492-DR7**		2
End Barrier	**1492-EBL3**		50	**1492-EBLDAG3**		20	**1492-EBLDAG3**		20
End Anchors and Retainers Screwless End Retainer	**1492-ERL35**		20	**1492-ERL35**		20	**1492-ERL35**		20
DIN Rail — Normal Duty	**1492-EAJ35**		100	**1492-EAJ35**		100	**1492-EAJ35**		100
DIN Rail — Heavy Duty	**1492-EAHJ35**		50	**1492-EAHJ35**		50	**1492-EAHJ35**		50
Jumpers Plug-In Center Jumper — 50-pole	**1492-CJK5-50**		10	**1492-CJLJ5-50**		10	**1492-CJLJ5-50**		10
Plug-In Center Jumper — 10-pole	**1492-CJK5-10**		20	**1492-CJLJ5-10**		20	**1492-CJLJ5-10**		20
Plug-In Center Jumper — 9-pole	**1492-CJK5-9**		20	**1492-CJLJ5-9**		20	**1492-CJLJ5-9**		20
Plug-In Center Jumper — 8-pole	**1492-CJK5-8**		20	**1492-CJLJ5-8**		20	**1492-CJLJ5-8**		20
Plug-In Center Jumper — 7-pole	**1492-CJK5-7**		20	**1492-CJLJ5-7**		20	**1492-CJLJ5-7**		20
Plug-In Center Jumper — 6-pole	**1492-CJK5-6**		20	**1492-CJLJ5-6**		20	**1492-CJLJ5-6**		20
Plug-In Center Jumper — 5-pole	**1492-CJK5-5**		20	**1492-CJLJ5-5**		20	**1492-CJLJ5-5**		20
Plug-In Center Jumper — 4-pole	**1492-CJK5-4**		60	**1492-CJLJ5-4**		60	**1492-CJLJ5-4**		60
Plug-In Center Jumper — 3-pole	**1492-CJK5-3**		60	**1492-CJLJ5-3**		60	**1492-CJLJ5-3**		60
Plug-In Center Jumper — 2-pole	**1492-CJK5-2**		60	**1492-CJLJ5-2**		60	**1492-CJLJ5-2**		60
Other Accessories Disconnect Plug	**1492-DPL**		50	**1492-DPL**		50	—		—
Component Plug	**1492-CPL**		50	**1492-CPL**		50	—		—
Fuse Plug Without Blown Fuse Indicator	**1492-FPK2**		20	**1492-FPK2**		20	—		—
10…36V Blown Fuse Indicator	**1492-FPK224**		20	**1492-FPK224**		20	—		—
35…70V Blown Fuse Indicator	**1492-FPK248**		20	**1492-FPK248**		20	—		—
60…150V Blown Fuse Indicator	**1492-FPK2120**		20	**1492-FPK2120**		20	—		—
140…250V Blown Fuse Indicator	**1492-FPK2250**		20	**1492-FPK2250**		20	—		—
Reducing Sleeves 28…24 AWG (0.13…0.2 mm²) White	1492-PSL3-2		100	—		—	—		—
Reducing Sleeves 22…20 AWG (0.25…0.5 mm²) Grey	**1492-PSL3-5**		100	—		—	—		—
Reducing Sleeves 18 AWG (0.75…1.0 mm²) Dark Grey	**1492-PSL3-10**		100	—		—	—		—
Test Plug	**1492-TPL5**		25	**1492-TP23**		20	—		—
Electrical Warning Plate	**1492-EWPL5**		20	—		—	—		—
Group Marking Carrier	**1492-GM35**		25	**1492-GM35**		25	**1492-GM35**		25
Marking Systems Snap-In Marker Cards	**1492-M5X10** (144/card)		5	**1492-M5X10** (144/card)		5	**1492-M5X10** (144/card)		5
Snap-In Marker Cards	**1492-M5X5** (200/card)		5	**1492-M5X5** (200/card)		5	**1492-M5X5** (200/card)		5

Panduct® Type F Narrow Slot Wiring Duct

- Narrow slot/finger design provides more slots to fit the spacing of high-density terminal blocks and other hardware
- Material: Lead-free PVC
- UL recognized continuous use temperature: 122°F (50°C)
- UL 94 flammability rating of V-0
- Conforms with NFPA 79-2007 section 13.3.1 requirement for flame retardant material
- Provided with mounting holes
- Base and cover length is 6 feet

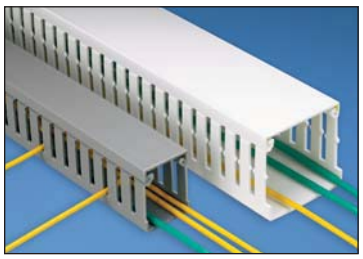

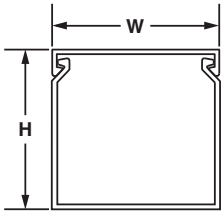

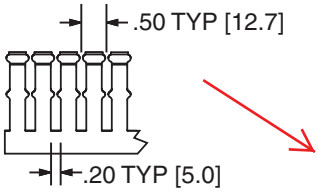

Multiple slot restrictors present with 2" and greater duct wall height.

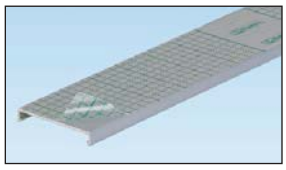

To order cover with protective film add "-F" to part number. 6" cover not available with film.

NEW!

Base Part Number	Duct Size (W x H)* In.	Duct Size (W x H)* mm	Slot Width In.	Slot Width mm	Cover Part Number	Std. Pkg. Qty.	Base Ctn. Qty.	Cover Ctn. Qty.
F.5X.5LG6	0.69 x 0.60	17.5 x 15.2	0.20	5.0	C.5LG6	6	120	120
F.5X1LG6	0.69 x 1.06	17.5 x 26.9	0.20	5.0	C.5LG6	6	120	120
F.75X.75LG6	0.93 x 0.82	23.6 x 20.9	0.20	5.0	C.75LG6	6	120	120
F.75X1.5LG6	0.93 x 1.57	23.6 x 39.9	0.20	5.0	C.75LG6	6	120	120
F1X1LG6	1.26 x 1.13	32.0 x 28.7	0.20	5.0	C1LG6	6	120	120
F1X1.5LG6	1.26 x 1.62	32.0 x 41.1	0.20	5.0	C1LG6	6	120	120
F1X2LG6	1.26 x 2.12	32.0 x 53.8	0.20	5.0	C1LG6	6	120	120
F1X3LG6	1.26 x 3.12	32.0 x 79.2	0.20	5.0	C1LG6	6	120	120
F1X4LG6	1.26 x 4.10	32.0 x 104.1	0.20	5.0	C1LG6	6	60	120
F1.5X1LG6	1.75 x 1.12	44.5 x 28.4	0.20	5.0	C1.5LG6	6	120	120
F1.5X1.5LG6	1.75 x 1.62	44.5 x 41.1	0.20	5.0	C1.5LG6	6	120	120
F1.5X2LG6	1.75 x 2.12	44.5 x 53.8	0.20	5.0	C1.5LG6	6	120	120
F1.5X3LG6	1.75 x 3.12	44.5 x 79.2	0.20	5.0	C1.5LG6	6	120	120
F1.5X4LG6	1.75 x 4.10	44.5 x 104.1	0.20	5.0	C1.5LG6	6	60	120
F2X1LG6	2.25 x 1.12	57.2 x 28.4	0.20	5.0	C2LG6	6	120	120
F2X1.5LG6	2.25 x 1.62	57.2 x 41.1	0.20	5.0	C2LG6	6	120	120
F2X2LG6	2.25 x 2.12	57.2 x 53.8	0.20	5.0	C2LG6	6	120	120
F2X3LG6	2.25 x 3.12	57.2 x 79.2	0.20	5.0	C2LG6	6	60	120
F2X4LG6	2.25 x 4.10	57.2 x 104.1	0.20	5.0	C2LG6	6	60	120
F2X5LG6	2.25 x 5.10	57.2 x 129.5	0.20	5.0	C2LG6	6	60	120
F2.5X3LG6	2.75 x 3.12	69.9 x 79.2	0.20	5.0	C2.5LG6	6	120	120
F3X1LG6	3.25 x 1.12	82.6 x 28.4	0.20	5.0	C3LG6	6	120	120
F3X2LG6	3.25 x 2.12	82.6 x 53.8	0.20	5.0	C3LG6	6	120	120
F3X3LG6	3.25 x 3.12	82.6 x 79.2	0.20	5.0	C3LG6	6	60	120
F3X4LG6	3.25 x 4.10	82.6 x 104.1	0.20	5.0	C3LG6	6	60	120
F3X5LG6	3.25 x 5.10	82.6 x 129.5	0.20	5.0	C3LG6	6	60	120
F4X2LG6	4.25 x 2.12	108.0 x 53.8	0.20	5.0	C4LG6	6	60	120
F4X3LG6	4.25 x 3.12	108.0 x 79.2	0.20	5.0	C4LG6	6	60	120
F4X4LG6	4.25 x 4.10	108.0 x 104.1	0.20	5.0	C4LG6	6	60	120
F4X5LG6	4.25 x 5.10	108.0 x 129.5	0.20	5.0	C4LG6	6	60	120
F6X4LG6	6.25 x 4.15	158.8 x 105.4	0.20	5.0	C6LG6	6	60	120

Part number shown for LG (Light Gray). For other color availability see color selection guide, page C1.48.
Base and cover sold separately.
*"H" dimension includes duct and cover.

THIS COPY IS PROVIDED ON A RESTRICTED BASIS AND IS NOT TO BE USED IN ANY WAY DETRIMENTAL TO THE INTERESTS OF PANDUIT CORP.

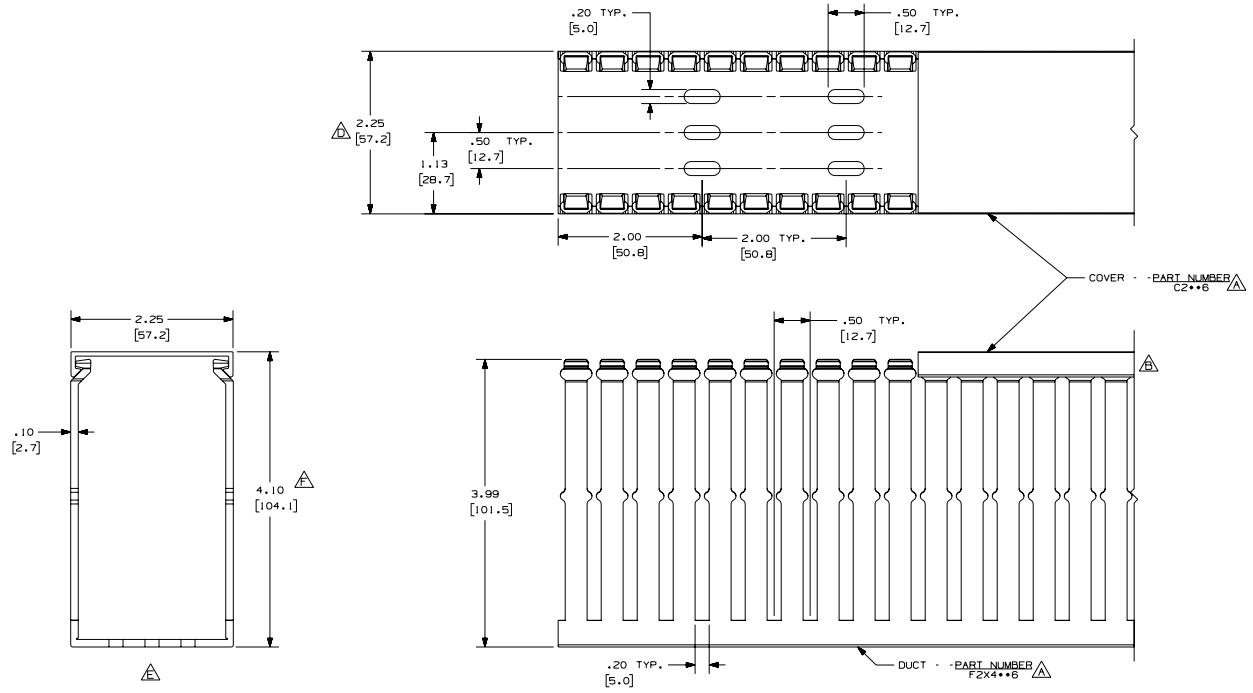

NOTES:

1. ALL DIMENSIONS ARE REFERENCE ONLY.
2. DIMENSIONS IN PARENTHESIS ARE METRIC.
3. THE ** DENOTE COLOR.
4. DUCT AND COVER AREA AVAILABLE IN 6 FT [1828.8] LENGTHS

REV	DATE	BY	CHK	DESCRIPTION
--	.....	...	...	G. ADDED LENGTH NOTE F. CORRECTED DIMENSION
2	7-23-07	JCST	MKBE	E. DELETED DIMENSION D. ADDED DIMENSION
--	.....	...	...	C. CHANGED DRAWING SIZE
1	9-24-04	JCST	MKBE	B. CHANGED VIEW A. ADDED TOP VIEW, NOTES, AND LABELS
R	3-20-03	JCST	JGG	DRAWING RELEASED

CAD FILENAME/LAYERS: D11000CL_DC/00C

PANDUIT CORP. TINLEY PARK, ILLINOIS

WIRING DUCT - TYPE F DUCT WITH COVER
2 X 4
MARKETING DRAWING

DRAWN BY	MAT'L:	SCALE
JCST	PVC	FULL
DATE: 3-20-03		DRAWING NO. 36897-774
CHECKED BY: JGG		SIZE C

BOM #25

Mounting rails allow many blocks to be fastened in a panel with only a few screws to anchor the rail to the panel. Mounting rails allow easy installation and removal of a block in a row.

Cat. No.	Description	Pkg Qty.	Dimensions*
199-DR1	Symmetrical Rail 35 mm x 7.5 mm 3.28 ft (1 m) long Zinc-Plated Clear Chromated Steel EN60715 **DIN #3**	10	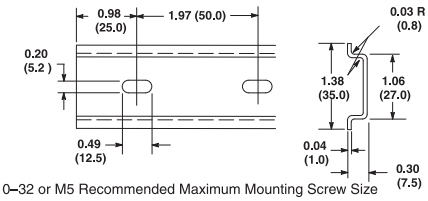 #10–32 or M5 Recommended Maximum Mounting Screw Size
199-DR2	Same as Cat. No. 199-DR1, but length = 2 m	20	
199-DR4	Heavy Duty Symmetrical Rail 35 mm x 15 mm 3.28 ft (1 m) long Zinc-Plated Clear Chromated Steel EN60715 **DIN #3**	5	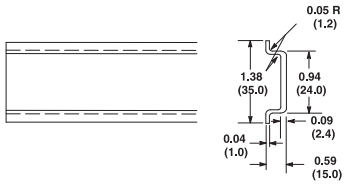
1492-DR3	Mini 15 mm x 5.5 mm Rail 3.28 ft (1 m) long Zinc-Plated Clear Chromated Steel EN60715 **DIN #2**	5	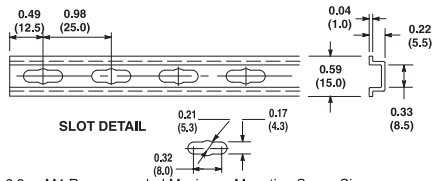 #8-3 2 or M4 Recommended Maximum Mounting Screw Size
1492-DR5	Symmetrical Rail 35 mm x 7.5 mm 3.28 ft (1 m) long Copper-Free Aluminum EN60715 For Bul. 1492 Terminal Blocks Only **DIN #3**	10	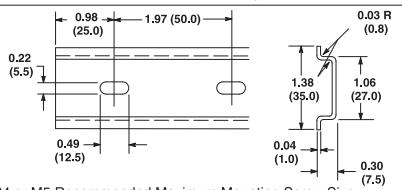 #12–24 or M5 Recommended Maximum Mounting Screw Size
❄ **1492-DR6**	Symmetrical Rail 35 mm x 7.5 mm 2.26 in. (57.4 mm) high 3.28 ft (1 m) long Copper-Free Aluminum For Bul. 1492 Terminal Blocks Only **DIN #3**	2	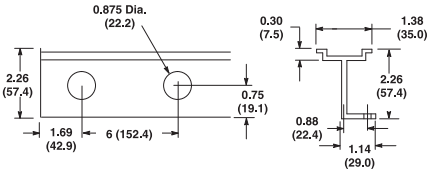 Wire insulator plug for wire access through rail — use Heyco UB875
❄ **1492-DR7**	Symmetrical Rail 35 mm x 7.5 mm 2.80 in. (71.0 mm) high 3.28 ft (1 m) long Angled 30° Zinc-Plated, Chromated Steel **DIN #3**	2	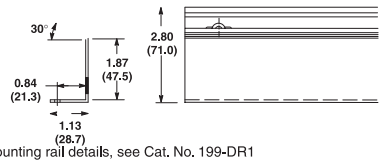 For mounting rail details, see Cat. No. 199-DR1
1492-DR8	Symmetrical Rail 35 mm x 15 mm 3.28 ft (1 m) long Copper EN60715 **DIN #3**	5	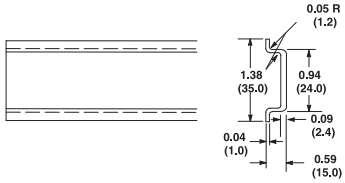
‡ **1492-DR9**	Symmetrical Rail 35 mm x 15 mm 3.28 ft (1 m) long Zinc-Plated Clear Chromated Steel EN60715 **DIN #3**	5	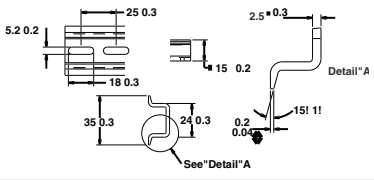

* Dimensions shown in inches (millimeters). Dimensions are not intended to be used for manufacturing purposes.
❄ 0.218 x 0.50 in. (5.5 x 12.7 mm) slotted mounting holes every 3 in. (76.2 mm) starting 1.69 in. (42.9 mm) from end.
‡ Dimensions in millimeters.

12

BOM #26

ELECTRIC HEATERS

115/230 Volt
100/200 Watt

115/230 Volt
400/800 Watt

115/230 Volt
1300 Watt

INDUSTRY STANDARDS

UL 508A Component Recognized; File No. E61997

CSA Certified, CSA File No. LR42186
CE

APPLICATION

Protect mechanical, electrical and electronic equipment from low temperatures, condensation and corrosion with this thermostatically controlled, fan-driven heater that maintains a stable enclosure temperature.
Fan draws cool air from the bottom of the enclosure and passes this air across the thermostat and heating element before being released into enclosure cavity. Heated air is discharged through the top of the heater unit.

SPECIFICATIONS

- Aluminum housing
- Thermostat range adjustable from 0 F to 100 F (-18 C to 38 C)
- Four 10-32 x self-tapping screws are included with each heater
- Ball bearing fan
- Terminal strip with clamp connector that accepts both solid and stranded wire

FINISH

- Brushed aluminum

⚠ CAUTION

These electric heaters are not designed for use in dusty, dirty, corrosive, or hazardous locations. Portions of the heater can get hot. Adequate protection must be taken to protect people from potential burns, and to protect other components from this heat. Pentair Technical Products recommends this heater only be installed in a totally-enclosed metal enclosure.

DO NOT INSTALL HEATERS ON WOOD PANELS. Heat sensitive components should not be placed near the heater discharge area since this air can be quite warm. The clearance range defines the space that must be kept free of these components for proper and safe operation of the heater.

Performance Data **100 and 200 Watt Heaters**

CATALOG NUMBERS	DAH1001A	DAH1002A	DAH2001A	DAH2002A
ELECTRICAL DATA				
Rated Voltage	**115**	**230**	**115**	**230**
Frequency (Hz)	50/60	50/60	50/60	50/60
Power Consumption (Watts)	100	100	200	200
Nominal Current (Amps)	0.98	0.49	1.89	0.95
HEATING PERFORMANCE				
Watts	**100**	**100**	**200**	**200**
UNIT CONSTRUCTION				
Weight (lb./kg)	1.6/0.73	1.6/0.73	1.6/0.73	1.6/0.73
X (in./mm)	4.00/102	4.00/102	6.00/152	6.00/152

Performance Data **400 and 800 Watt Heaters**

CATALOG NUMBERS	DAH4001B	DAH4002B	DAH8001B	DAH8002B
ELECTRICAL DATA				
Rated Voltage	**115**	**230**	**115**	**230**
Frequency (Hz)	50/60	50/60	50/60	50/60
Power Consumption (Watts)	400	400	800	800
Nominal Current (Amps)	3.72	1.86	7.37	3.69
HEATING PERFORMANCE				
Watts	**400**	**400**	**800**	**800**
UNIT CONSTRUCTION				
Weight (lb./kg)	2.2/1.00	2.2/1.00	2.2/1.00	2.2/1.00
X (in./mm)	6.00/152	6.00/152	8.00/203	8.00/203

Performance Data **1300 Watt Heaters**

CATALOG NUMBERS	DAH13001C	DAH13002C
ELECTRICAL DATA		
Rated Voltage	**115**	**230**
Frequency (Hz)	50/60	50/60
Power Consumption (Watts)	1300	1300
Nominal Current (Amps)	11.5	5.7
HEATING PERFORMANCE		
Watts	**1300**	**1300**
UNIT CONSTRUCTION		
Weight (lb./kg)	3.4/1.54	3.4/1.54
X (in./mm)	8.00/203	8.00/203

Dimensions and Clearance Range Drawing for DAH1001A, -2A and DAH2001A, -2A

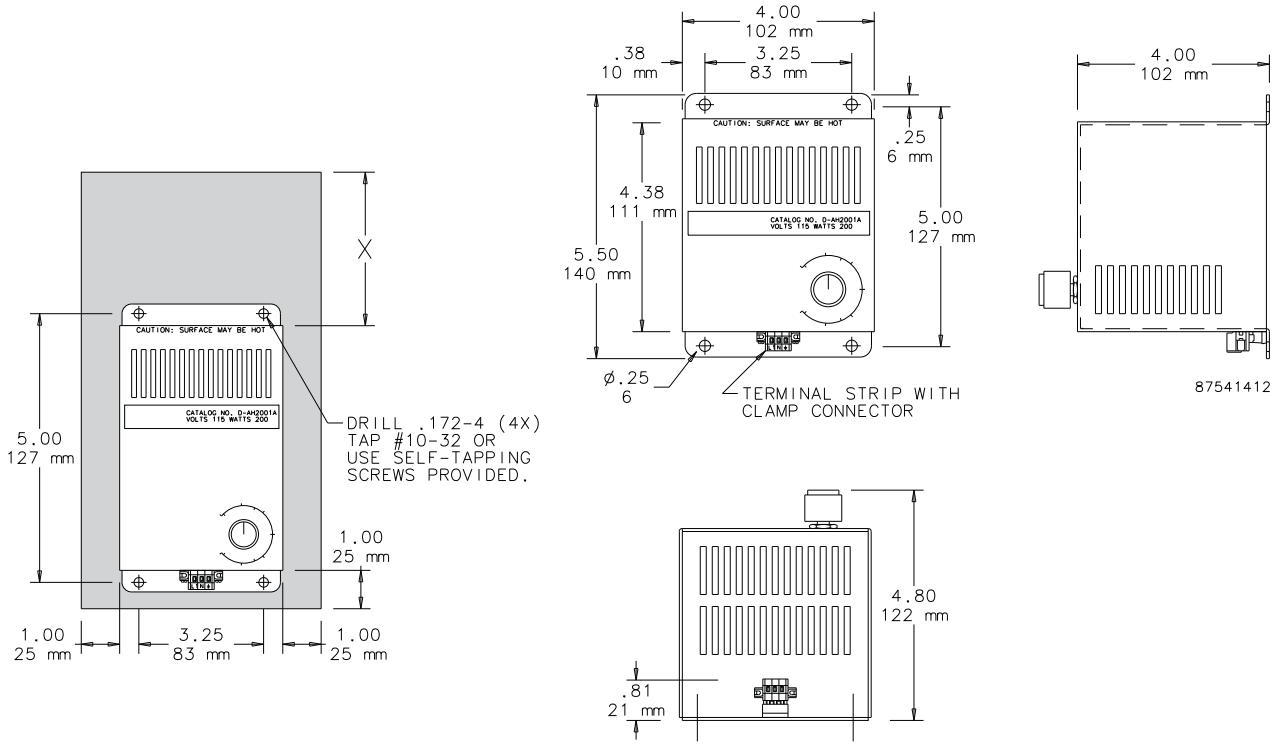

Dimensions and Clearance Range Drawing for DAH4001B, -2B and DAH8001B, -2B

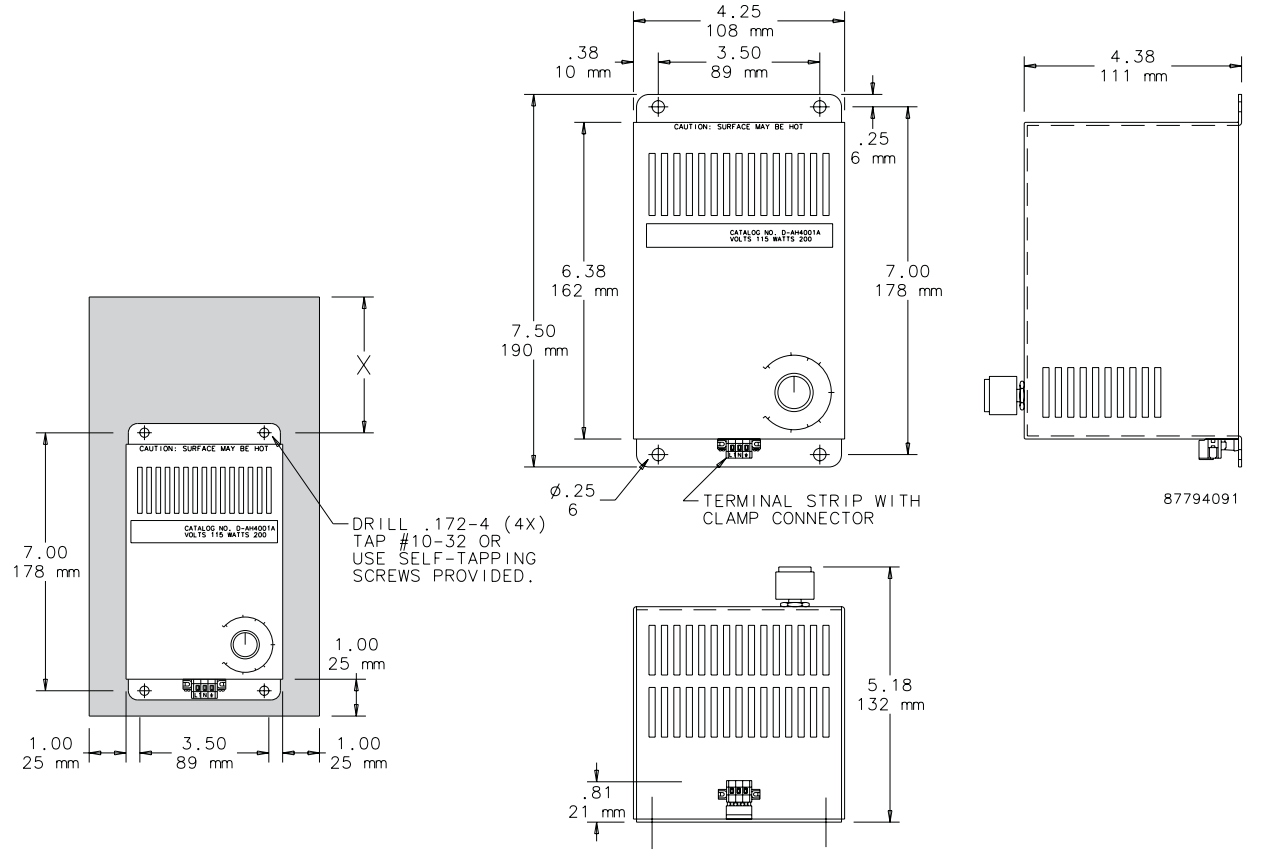

Dimensions and Clearance Range Drawing for DAH13001C and DAH13002C

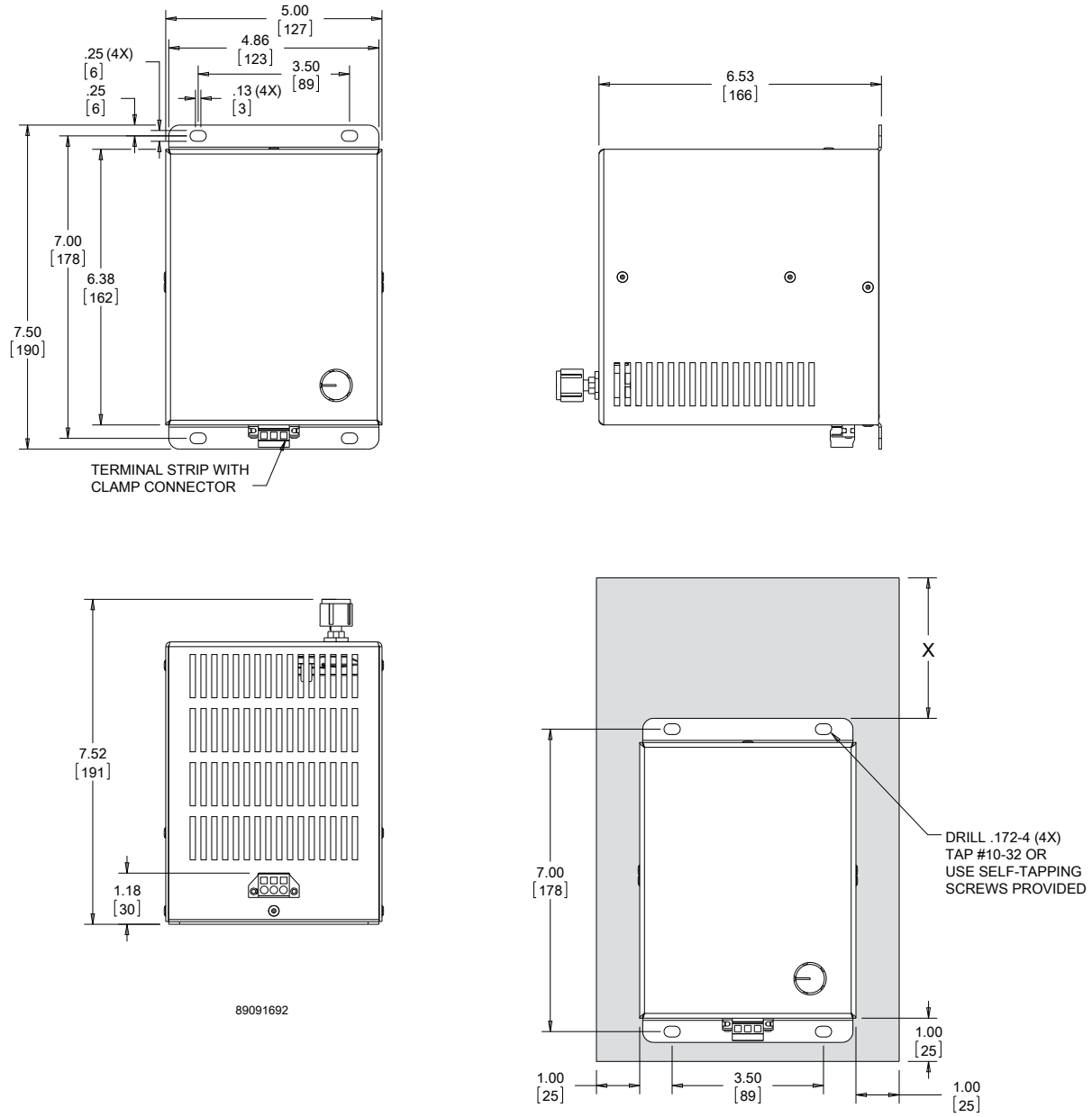

DEPARTMENT OF THE ARMY
ALBUQUERQUE DISTRICT, CORPS OF ENGINEERS
ALBUQERQUE DISTRICT OFFICE
4101 JEFFERSON PLAZA NE
ALBUQUERQUE, NM 87109

SUBMITTAL REVIEW VERIFICATION SHEET

PROJECT TITLE: Kirtland BFF Mid-Plume Pump and Treat System Expansion
CONTRACT NUMBER: W912DR-12-D-0006 DM01
DATE RECEIVED: 11-29-2017
DATE REVIEWED: 11-29-2017

DESCRIPTION OF ITEMS REVIEWED:

1. Submittal 10 Rev. #2 Well Pump and Components associated with KAFB-106239.

NO EXCEPTIONS TAKEN.	**X**
EXCEPTIONS AS NOTED ON DRAWINGS AND/OR ATTACHED SHEETS(S). RESUBMISSION NOT REQUIRED.	
EXCEPTIONS AS NOTED ON DRAWINGS AND/OR ATTACHED SHEETS(S). RESUBMISSION REQUIRED.	
RECEIPT ACKKNOWLEDGED.	

Notes: This revision is for the stainless steel pump end and motor that will be installed in place of those originally submitted.

NOTE: ITEMS REVIEWED AS TO GENERAL LAYOUT ONLY. DIMENSIONS AND QUANTITIES NOT CHECKED. REVIEW DOES NOT RELIEVE CONTRACTOR OF RESPONSIBILITIES FOR ANY ERRORS WHICH MAY EXIST AS CONTRACTOR SHALL BE RESPONSIBLE FOR DIMENSIONS AND DESIGN OF ADEQUATE CORRECTIONS, DETAILS AND SATISFACTORY CONSTRUCTION OF WORK.

SIGNATURE SALAZAR.CARLOS.F.IV.1232198555 Digitally signed by SALAZAR.CARLOS.F.IV.1232198555 DN: c=US, o=U.S. Government, ou=DoD, ou=PKI, ou=USA, cn=SALAZAR.CARLOS.F.IV.1232198555 Date: 2017.11.29 12:51:55 -07'00' **DATE** 11/29/2017

EA Engineering, Science, and Technology, Inc., PBC

Submittal Review Sheet 8

Project Name: **Kirtland BFF Mid-Plume Pump and Treat System Expansion**				Date Received: **11/29/2017**			
Project Owner: **Kirtland Air Force Base**				Checked By: **Tyler Curley**			
Contractor: **Techsas Inc.**	Engineer: **EA Engineering, Science and Technology, Inc., PBC.**			Log Page: **NA**			
Address: **4819 West Bayshore Drive** **Bacliff, TX 77518**	Address: **320 Gold Ave. SW, Suite 1300** **Albuquerque, NM 87102**			EA No.: **62599DM01**			
				Spec. Section: **00 00 00**			
				Drawing/Detail No.:			
ATTN: **Ed Butler**	ATTN: **Devon Jercinovic**			1st Sub		Re-Sub	
Date Transmitted: **11/29/2017**	Prev. Transmittal Date:						

Item No.	No. Copies	Description	Manufacturer	Mfg/Vendor Dwg or Detail	Action Taken*
10	1	Well Pump and Components	Various		**A**

The Action Designated Above is in Accordance with the Following Legend:

A – Furnish as Submitted
B – Furnish as Noted
C – Revise and Re-submit
1. Not enough information for review.
2. No reproducible submitted.
3. Copies illegible.
4. Not enough copies submitted.
5. Wrong sequence number.
6. Wrong resubmittal number.
7. Wrong Spec. Section.
8. Wrong form used.
9. See Comments.

D – Rejected
E – Engineer's Review not Required
1. Submittal not required.
2. Supplemental Information. Submittal retained for Information purposes only.
3. Information reviewed and approved on prior submittal.
4. See Comments.

Review is for general compliance with Contract Documents. No responsibility is assumed for correctness of dimensions or detail. Contractor is required to specify deviations from contract requirements. Lack of exceptions noted by Engineer does not waive Contractor's obligation to comply with Drawings and Specifications.

Comments:
Revision 2 – Updated submittal with 304 stainless steel pump end and pump motor.

By: _____ Date: 11/29/17

Distribution: [1] Contractor [1] Engineer [1] Owner

TRANSMITTAL DOCUMENT

Date:	**10/13/2017**	**From:**	**Ed Butler**
To:	**EA Engineering, Science, and Technology, Inc., 320 Gold Ave. SW, Suite 1300 Albuquerque, NM 87102 Devon Jercinovic**	**Job Name:**	**Kirtland AFB, NM Bulk Fuels Facility**
		Reference:	
		Transmittal Method:	**E-mail**
		Sent By:	**Ed Butler**

Submittal	Dwg. Number	Item Description
10 Rev #1	KAFB-106239 Extraction Well	Well Pump and Components
	Figure	

Revised by EA on 29NOV17

Ed Butler
TECHSAS, Inc.
4819 West Bayshore Drive
Bacliff, TX 77518

"I hereby certify that the (equipment) (material) (article) shown and marked in this submittal is that proposed to be incorporated with the Contract, is in compliance with the contract drawings and specification, can be installed in the allocated spaces, and is submitted for Contractor approval.

Certified by _____.
(Signature when applicable) Date: _____.

3-inch Galvanized Pipe

Standard Pipe

Wheatland Tube
A DIVISION OF ZEKELMAN INDUSTRIES

Standard Pipe: SureThread™ and ERW

Setting the standard in the standard pipe industry

With a tradition of service and quality that's 80-plus years strong, Wheatland Tube is the only domestic, full-line producer of continuous weld (CW) and electric resistance weld (ERW) ¼–18 NPS pipe today. Wheatland is also a worldwide leader in hot-dip galvanization technology.

¼–18 nominal sizes produced and stocked in a variety of ASTM standards

Standard hot-dip galvanization to ASTM A53 requirements

350 combinations of finish, end treatments and lengths

All Wheatland black and galvanized pipe (½–6 NPS) is approved for drinking water usage

A Full Line of Pipe Products for Any Application

Wheatland produces and stocks pipe of ¼–18 nominal sizes in a variety of ASTM standards. SureThread (ASTM A53) and ERW are used for mechanical and pressure applications, and for ordinary uses in steam, water, gas and air lines.

More than 350 different combinations of finish, end treatments and lengths are available on standard pipe. Our standard process is hot-dip galvanization to ASTM A53 requirements.

Surface finishes include black, passivate, galvanized, uncoated, pickled, pickled and oiled, bare and soluble oil. End finishes include plain end, roll groove, cut groove, threaded and coupled, and threads only (one or both ends).

Documented Quality Assurance

Wheatland facilities have quality systems in place and are ISO certified for Quality Management Systems. Strategically located in the U.S., we carry a large inventory and can ship quickly to meet your tight delivery schedules.

MADE IN THE USA

A53 Electric Resistance Weld Pipe, Type E, Grade B

Suitable for welding, threading and grooving

Finish options:
Black and hot-dip galvanized

Sizes:
Schedule 40, 2–18 NPS

Produced to ASTM A53/A53M, federal specification WW-P404 and ASME B36.10M

ASTM A53, TYPE E, WEIGHTS AND DIMENSIONS

TRADE SIZE	OD	NOMINAL WALL THICKNESS	WEIGHT
	in.	in.	lbs./ft.
2	2.375	0.154	3.66
2½	2.875	0.203	5.80
3	3.500	0.216	7.58
4	4.500	0.237	10.80
5	5.563	0.258	14.63
6	6.625	0.280	18.99
8	8.625	0.322	28.58
10	10.750	0.365	40.52
12	12.750	0.375	49.61
14	14.000	0.375	54.62
16	16.000	0.375	62.64
18	18.000	0.375	70.65

HYDROSTATIC AND NON-DESTRUCTIVE ELECTRIC TESTING

Hydrostatic inspection test pressures for plain-end pipe are listed in Table X 2.2 of the A53/A53M industry specification. Test pressures are maintained for a minimum of five seconds. Non-destructive electric testing of the weld seam is required on each length of ERW pipe NPS 2 and larger.

TENSILE REQUIREMENTS

TENSILE STRENGTH, MIN.	YIELD STRENGTH, MIN.
60,000 psi	35,000 psi

BENDING TEST (COLD)

DEGREE OF BEND	DIAMETER OF MANDREL
90°	12x pipe OD

A53 Continuous Weld Pipe, Type F, Grade A

The continuous weld process creates a uniform grain structure to make bending, cutting and threading easier

Ideal for applications with frequent threading, grooving and bending requirements

Finish options:
Black, passivate, bare, pickled and oiled, and hot-dip galvanized

Sizes:
¼–4 NPS

Standard and extra heavy

Produced to ASTM A53/A53M, federal specification WW-P404 and ASME B36.10M

TEST PRESSURES (GRADE A)

NOMINAL SIZE	TEST PRESSURE (psi)
¼	700
½	700
¾	700
1	700
1¼	1,200
1½	1,200
2	2,300
2½	2,500
3	2,220
3½	2,030
4	1,900

ASTM A53, TYPE F, WEIGHTS AND DIMENSIONS

TRADE SIZE	OD	SCHEDULE 40		SCHEDULE 80	
	in.	Wall (in.)	Weight (lbs./ft.)	Wall (in.)	Weight (lbs./ft.)
¼	0.54	0.088	0.43	0.119	0.54
⅜	0.675	0.091	0.57	0.126	0.74
½	0.84	0.109	0.85	0.147	1.09
¾	1.05	0.113	1.13	0.154	1.48
1	1.315	0.133	1.68	0.179	2.17
1¼	1.66	0.14	2.27	0.191	3
1½	1.900	0.145	2.72	0.2	3.63
2	2.375	0.154	3.66	0.218	5.03
2½	2.875	0.203	5.8	0.276	7.67
3	3.5	0.216	7.58	0.3	10.26
3½	4	0.226	9.12	0.318	12.52
4	4.5	0.237	10.8	0.337	15

TENSILE REQUIREMENTS

TENSILE STRENGTH, MIN.	YIELD STRENGTH, MIN.	ELONGATION IN 2
48,000 psi	30,000 psi	Refer to A53 table X 4.1, latest revisions—ASTM A53/A53M

BENDING TEST (LESS THAN NPS 2)

	DEGREE OF BEND	DIAMETER OF MANDREL
Standard	90°	12x pipe OD
Close Coiling	90°	8x pipe OD

FLATTENING TEST (NPS 2 AND GREATER)

To test the quality of the weld, we position the weld at 90° from the direction of force and flatten until the OD is ¾ of the original outside diameter. No cracks should occur along the inside or outside surface of the weld.

STANDARD PIPE SCHEDULE 40 — ASTM A53 GRADES A AND B

TRADE SIZE	DN DESIGNATOR	OD		ID		WALL THICKNESS		NOMINAL WEIGHT (MASS) PER UNIT LENGTH			
		in.	mm	in.	mm	in.	mm	Plain End (lbs./ft.)	Plain End (kg/m)	Threads & Couplings (lbs./ft.)	Threads & Couplings (kg/m)
¼	8	0.540	13.7	0.364	9.2	0.088	2.24	0.43	0.63	0.43	0.63
⅜	10	0.675	17.1	0.493	12.5	0.091	2.31	0.57	0.84	0.57	0.84
½	15	0.840	21.3	0.622	15.8	0.109	2.77	0.85	1.27	0.86	1.27
¾	20	1.050	26.7	0.824	20.9	0.113	2.87	1.13	1.69	1.14	1.69
1	25	1.315	33.4	1.049	26.6	0.133	3.38	1.68	2.50	1.69	2.50
1¼	32	1.660	42.2	1.380	35.1	0.140	3.56	2.27	3.39	2.28	3.40
1½	40	1.900	48.3	1.610	40.9	0.145	3.68	2.72	4.05	2.74	4.04
2	50	2.375	60.3	2.067	52.5	0.154	3.91	3.66	5.44	3.68	5.46
2½	65	2.875	73.0	2.469	62.7	0.203	5.16	5.80	8.63	5.85	8.67
3	80	3.500	88.9	3.068	77.9	0.216	5.49	7.58	11.29	7.68	11.35
3½	90	4.000	101.6	3.548	90.1	0.226	5.74	9.12	13.57	9.27	13.71
4	100	4.500	114.3	4.026	102.3	0.237	6.02	10.80	16.07	10.92	16.23
5	125	5.563	141.3	5.047	158.2	0.258	6.55	14.63	21.77	14.90	22.07
6	150	6.625	168.3	6.065	154.1	0.280	7.11	18.99	28.26	19.34	28.58
8	200	8.625	219.1	7.981	202.7	0.322	8.18	28.58	42.55	29.35	43.73
10	250	10.750	273.0	10.020	254.5	0.365	9.27	40.52	60.29	41.49	63.36
12	300	12.750	323.0	12.000	304.8	0.375	9.52	49.61	73.78	51.28	76.21
14	350	14.000	355.6	13.250	336.5	0.375	9.52	54.62	81.25	–	–
16	400	16.000	406.4	15.250	387.5	0.375	9.52	62.64	93.17	–	–
18	450	18.000	457.0	17.250	438.1	0.375	9.52	70.65	105.10	–	–

Black and galvanized Schedule 40 A53 ERW Grade B trade sizes ¼–8 are FM Approved.

FM APPROVED

EXTRA-HEAVY PIPE SCHEDULE 80 — ASTM A53, TYPE F, GRADE A

TRADE SIZE	DN DESIGNATOR	OD		ID		WALL THICKNESS		NOMINAL WEIGHT (MASS) PER UNIT LENGTH			
		in.	mm	in.	mm	in.	mm	Plain End (lbs./ft.)	Plain End (kg/m)	Threads & Couplings (lbs./ft.)	Threads & Couplings (kg/m)
¼	8	0.540	13.7	0.302	7.7	0.119	3.02	0.54	0.80	0.54	0.80
⅜	10	0.675	17.1	0.423	10.7	0.126	3.20	0.74	1.10	0.74	1.10
½	15	0.840	21.3	0.549	13.9	0.147	3.73	1.09	1.62	1.09	1.62
¾	20	1.050	26.7	0.742	18.8	0.154	3.91	1.48	2.20	1.48	2.21
1	25	1.315	33.4	0.957	24.3	0.179	4.55	2.17	3.24	2.19	3.25
1¼	32	1.660	42.2	1.278	32.5	0.191	4.85	3.00	4.47	3.03	4.49
1½	40	1.900	48.3	1.500	38.1	0.200	5.08	3.63	5.41	3.65	5.39
2	50	2.375	60.3	1.939	49.3	0.218	5.54	5.03	7.48	5.08	7.55
2½	65	2.875	73.0	2.323	59.0	0.276	7.01	7.67	11.41	7.75	11.52
3	80	3.500	88.9	2.900	73.7	0.300	7.62	10.26	15.27	10.35	15.39
3½	90	4.000	101.6	3.364	85.4	0.318	8.08	12.52	18.63	12.67	18.82
4	100	4.500	114.3	3.826	97.2	0.337	8.56	15.00	22.32	15.20	22.60

PERMISSIBLE VARIATIONS — ASTM A53 GRADES A AND B PIPE

	OD	OVER	UNDER
Outside Diameter	NPS ⅛ to 1½; DN 6 to 40	1/64 (0.4 mm)	1/64 (0.4 mm)
	NPS 2 and up; DN 50 and up	1%	1%
Wall Thickness at Any Point	—	—	12.5%
Weight	—	10%	10%

Mechanical Properties:
Grade A: Yield — 30,000 psi [205 MPa] minimum; Tensile — 48,000 psi [330 MPa] minimum.
Grade B: Yield — 35,000 psi [240 MPa] minimum; Tensile — 60,000 psi [415 MPa] minimum.

Wheatland Tube
A DIVISION OF ZEKELMAN INDUSTRIES

700 South Dock Street
Sharon, PA 16146

800.257.8182
info@wheatland.com
wheatland.com

Zekelman Industries

Corporate Office
227 West Monroe Street
Suite 2600
Chicago, IL 60606

312.275.1600
info@zekelman.com
zekelman.com

About Wheatland Tube Standard Pipe

Wheatland produces a full line of standard pipe—SureThread™ and ERW pipe—in a broad range of sizes. We're the industry leader in hot-dip galvanized pipe, and we offer more than 350 different combinations of finish, end treatments and lengths on our standard pipe.

All Wheatland manufacturing locations' quality management systems are certified to ISO requirements.

For more information, contact Wheatland Tube at:
800.257.8182 or **info@wheatland.com**
Or, visit our website at wheatland.com

Follow us on:

twitter.com/WheatlandTube
linkedin.com/company/zekelman-industries
youtube.com/ZekelmanIndustries
wheatland.com/blog

SPECIFICATIONS FOR STEEL PIPE

3-inch Glavanized Drop Pipe

Published pipe standards serve three functions.

1. They dictate manufacturing and testing requirements and prescribed methods of measuring the required mechanical and physical properties.

2. Without specifications, it would be difficult for the pipe buyer to establish a common ground of understanding with the producer as to product requirements.

3. When the pipe producer marks a specification on this product they warrant that the pipe is made from prime quality steel and meets all the requirements of the specification.

Standard pipe is manufactured and tested as prescribed by ASTM (formerly American Society for Testing Materials), an international, non-profit technical and Scientific organization formed for "the consensus development of standards on characteristics and performance of materials, products, systems and services." The society operates through more than 127 main technical committees. These committees function under regulations that ensure balanced representation among producers, users and general interest groups. The published standards, therefore, represent the consensus viewpoint of all involved. Line pipe and Oil Country products are manufactured and tested as prescribed by the American Petroleum Institute (API). The API operates similarly to the ASTM except that producers, consumers, and associations with primary interests in oil or gas are involved.

GRADE

Grade refers to divisions within different types of seamless and ERW pipe and designates mechanical properties such as minimum yield and tensile strengths. Grade B has higher tensile and yield strength than Grade A. It is manufactured to higher carbon content steel. Grade A, being a softer steel, is easier to bend and is recommended for use in close coiling and cold bending. Grade B has higher stress values and is better suited for machining operations. Grade C, which is available in ASTM-106, has higher tensile and yield strength than Grades A & B.

DIMENSIONS

Many changes have been made to ASTM specifications over the years. One of the more recent has been to make the specifications fit with metric, and more correctly, with the measurements of pipe and the related fittings.

To change the pipe outside diameter (OD) and wall thickness, simply multiply the SI dimensions by the appropriate factor to convert to metric. However, an inch is not a real inch. Nowhere on pipe 12" and smaller is there a corresponding measurement because this size has no real numerical value.

To solve this problem and still retain the intent of the size designation, the inch mark was removed from the column showing the size, and the term NPS was added as were the following words: The dimensionless designator NPS (nominal pipe size) has been substituted in this standard for such traditional terms as “nominal diameter,” “size,” and “nominal size.” They are now stated as NPS 1, NPS 2, NPS 6, NPS 12, NPS 14, etc.

WARNING

Most pipe specifications are restricted by tolerances for outside diameter, wall thickness, and weight. Pipe must meet all three criteria or material could be rejected. Please refer to the applicable specifications.

DIGEST OF COMMON - PIPE SPECIFICATIONS

Specification and Size Range Where Indicated	Scope	Type	Grades	Chemistry
A-120 (has been withdrawn) NPS 1/8 - 16	Blk & Galv Welded & SMLS pipe for ordinary use - not Intended for close coiling bending or high temperature service	CW ERW SMLS	None Specified	None Specified
A-53 NPS 1/8 - 26	Blk & Galv Welded & SMLS pipe suitable for welding and forming operations CW not intended for flanging. Grade B not intended for close coiling or severe cold forming. Pipe required for close coiling should be specified on order.	CW - Type F ERW - Type E SMLS - Type S	CW - Type F ERW & SMLS Grade A & B	**Composition, max %** **C Mg P S** **Type S (seamless pipe)** Open-health, electric-furnace or basic-oxygen: Grade A 0.25 .095 0.05 0.045 Grade B 0.30 1.20 0.05 0.045 **Type E (electric resistance welded)** Open-health, electric-furnace or basic-oxygen: Grade A 0.25 .095 0.05 0.045 Grade B 0.30 1.20 0.05 0.045 **Type F (furnace welded pipe)** Open-health, electric-furnace or basic-oxygen: 0.30 1.20 0.05 0.045 Ladle and Check Limits
A-106 NPS 1/8 - 26	SMLS for high temperature service. Suitable for bending, flanging, and similar forming operations.	SMLS Only	Grades A, B & C	**Composition, max %** **Element* Grade A Grade B Grade C** Chrome 0.40 0.40 0.40 Copper 0.40 0.40 0.40 Molybdenum 0.15 0.15 0.15 Nickel 0.40 0.40 0.40 Vanadium 0.08 0.08 0.08 *These five elements combined shall not exceed 1%.
A-135 NPS 2-30	Electric resistance welded for conveying fluid, gas or vapor.	ERW Only	Grades A & B	**% max** **Element Grade A Grade B** Carbon 0.25 0.30 Manganese 0.95 1.20 Phosphorus 0.035 0.035 Sulfur 0.035 0.035 Ladle and check limits
A-252 NPS 6 - 24	ERW or SMLS for Pipe Piles	ERW SMLS DSAW	Grades 1, 2, 3	All grades .05 Max. % Phos. Ladle & check limits
A-333	SMLS & Welded Carbon & Alloy Steel pipe for low temperature service	SMLS ERW	1, 3, 4, 6, 7, 8, 9	**% max** **GR C MN P S Si Ni CR CU** 1 .30 .40 - 1.05 .025 3 .19 .31 - .64 .025 .025 .18 - .37 3.18 -3.82 4 .12 .50 - 1.05 .025 .025 .08 - .37 .47 - .96 .44 - 1.01 .40 - .75 .04 - .30 6 .30 .29 - 1.06 .025 .025 .10min 7 .10 .90 max. .025 .025 .13 - .32 2.03 -2.57 8 .13 .90 max. .025 .025 .13 - .32 8.40 - 9.60 9 .20 .40 - 1.05 .025 .025 1.80 -2.24 .75 - 1.25 10 .20 1.15 -1.50 .035 .018 .10 - .36 .25 max. .15 max. .15 max. .06 max. 11 .10 0.90 max. .025 .025 0.36 max. 35.0 -37.0 .50 max.
A-335 NPS 1/8 - 26	SMLS Alloy Steel Pipe for high temperature service	SMLS Only	P1, P2, P5, P5b, P5c, P9, P11, P12, P15, P21, P22, P91	**Grade UNS Des. C Mg P max S max Si Cr Mo** P1 K11522 .10-20 .30-80 .025 .025 .10-50 .44-65 P2 K11547 .10-20 .30-61 .025 .025 .10-30 .5-.81 .44-65 P5 K41545 .15max .30-80 .025 .025 .50max 4-6 .45-65 P5b K51545 .15max .30-80 .025 .025 1.00-2.00 4-6 .45-65 P5c K41246 .12max .30-80 .025 .025 .50max 4-6 .45-65 P9 S50400 .15max .30-80 .025 .025 .25-1.00 8-10 .80-1.10 P11 K11507 .05-.15 .30-80 .025 .025 .50-1.00 1-1.5 .44-65 P12 K11582 .05-.15 .30-80 .025 .025 .50max .80-1.25 .44-65 P15 K11578 .05-.15 .30-80 .025 .025 1.15-1.65 .44-65 P21 K31545 .05-.15 .30-80 .025 .025 .50max 2.65-3.35 .80-1.06 P22 K21590 .05-.15 .30-80 .025 .025 .50max 1.9-2.5. .87-1.13 P91 K91580 .08-.12 .30-80 .020 .010 .20-.50 8-9.5 .85-1.05 a. New designation established in accordance with Practice E-527 and SAE J1086. Practice for Numbering Metals and Alloys (UNS). b. Grade P5c shall have a titanium content of not less than 4 times the carbon content and not more than 0.70% or a columbium content of 8 to 10 times the carbon content.
A-501 Square & Rectangular 1" - 10" Round 1" - 24"	Hot Formed Welded & SMLS Round, Square & Rectangular Tubing	SMLS Welded	None Specified	**Composition %** **Element Heat Analysis Product Analysis** Carbon, max. 0.26 0.30 Phosphorus, max. 0.035 0.045 Sulfur, max. 0.035 0.045 Copper, min.* 0.20 0.18 *When copper steel is specified
A-587 NPS 1/2" - 10"	EW Pipe for process lines suitable for severe forming involving flanging and close bending	ERW Only	None Specified	**% MAX. % MIN.** **C MN P S AL** .15 .27-.63 .035 .035 .02-.11
A-589 Type 1 NPS 6-16	SMLS & Welded Water Pipe Type 1 Drive Pipe	Type 1 SMLS or Welded	Type 1 A or B	**% MAX.** **P S** .050 .060

CONTINUED

DIGEST OF COMMON - PIPE SPECIFICATIONS

CONTINUED

Specification and Size Range Where Indicated	Tensiles	Hydrostatic	Tests Bend	Flattening	Wall Tolerance	OD Tolerance
A-120 (has been withdrawn) NPS 1/8 - 16	None Specified	yes	None Specified	None Specified	Min. wall shall not be more than 12.5% under nominal wall	1/2" - 1-1/2" + 1/64" -1/32" 2" & over- +/- 1% of OD
A-53 NPS 1/8 - 26	MIN. P.S.I. Grade / Yield / Tensile CW 25,000 45,000 GR-A 30,000 48,000 GR-B 35,000 60,000	yes	yes - 2" & under Std. & XHY 90° to 12 times nom. diameter. Close coiling 180° to 8 times nom. dia.	yes - over 2" nom. XHY & lighter. CW 90° to 75% ODv	Min. wall shall not be more than 12.5% under nominal wall	1/2" - 1-1/2" + 1/64" -1/32" 2" & over- +/- 1% of OD
A-106 NPS 1/8 - 26	MIN. P.S.I. Grade / Yield / Tensile A 30,000 48,000 B 35,000 60,000 C 40,000 70,000	yes	Not req'd over 2" diameter. 90° to 12 times dia. Close coiling 180° to 8 times diameter	yes - over 2" dia.	Min. wall shall not be more than 12.5% under nominal wall	1/8" - 1-1/2" + 1/64" -1/32" 2" - 4" +/- 1/32" 5" - 8" + 1/16" -1/32" 10" - 18" + 3/32" -1/32" 18" & over- 1/8" -1/32"
A-135 NPS 2-30	MIN. P.S.I. Grade / Yield / Tensile A 30,000 48,000 B 35,000 60,000	yes	None Specified	yes - for all sizes to 2/3 OD	Min. wall shall not be more than 12.5% under nominal wall	For all sizes +/- 1% of OD
A-252 NPS 6 - 24	MIN. P.S.I. Grade / Yield / Tensile 1 30,000 50,000 2 35,000 60,000 3 40,000 66,000	None Specified	None Specified	None Specified	Min. wall shall not be more than 12.5% under nominal wall. Surface defects no more than 25% deep	+/- 1% of OD
A-333	MIN. P.S.I. Grade / Yield / Tensile 1 30,000 50,000 2 35,000 65,000 3 35,000 60,000 6 35,000 60,000 7 35,000 65,000 8 75,000 100,000 9 46,000 63,000 10 65,000 80,000 11 35,000 65,000	yes	None Specified	yes - for all sizes	Min. wall shall not be more than 12.5% under nominal wall	2" - 4" +/- 1/32" 5" - 8" + 1/16" - 1/32" 10" - 18" + 3/32" - 1/32" 18" & + 1/8" Over - 1/32"
A-335 NPS 1/8 - 26	MIN. P.S.I. Grade / Yield / Tensile P1 30,000 55,000 P2 30,000 55,000 P-91 60,000 85,000 All Others 30,000 60,000	yes	yes	yes	Min. wall shall not be more than 12.5% under nominal wall	1/8" - 1-1/2" + 1/64" -1/32" 2" - 4" +/- 1/32" 4" - 8" + 1/16" - 1/32" 10" - 18" + 3/32" - 1/32" 20" - 26" + 1/8" -1/32"
A-501 Square & Rectangular 1" - 10" Round 1" - 24"	MIN. P.S.I. Yield / Tensile 36,000 58,000	None Specified	Round None Shapes Yes	None Specified	None Specified Weight shall not be less than specified by more than 3.5%. Surface defect no more than 15%	Round: 1-1/2" & under + 1/65" - 1/32" 2" & over +/- 1% of OD Shapes: 2-1/2" & under +/- .020 2-1/2" - 3-1/2" +/- .025 3-1/2" - 5-1/2" +/- .030 5-1/2" & over +/- 1%
A-587 NPS 1/2" - 10"	MIN. P.S.I. Yield / Tensile 30,000 48,000	None Specified Nondestructive test shall be made	None Specified A flange test shall be made	yes - for all sizes	Refer to table 4 ASTM Standards for A-587	Refer to table 4 ASTM Standards for A-587
A-589 Type 1 NPS 6-16	MIN. P.S.I. Grade / Yield / Tensile CW 25,000 45,000 A 30,000 48,000 B 35,000 60,000	yes	None Specified	None Specified	Min. wall shall not be more than 12.5% nominal wall	1-1/2" & under + 1/64" - 1/32" 2" & over +/- 1% of OD

DIGEST OF COMMON - PIPE SPECIFICATIONS (cont.)

Specification and Size Range Where Indicated	Scope	Type	Grades	Chemistry
Type II NPS 1-12	Type II Water well reamed and drifted	Type II SMLS, ERW or CW	Type II A or CW	% MAX. P .050 S .060
Type III NPS 1-2	Type III Driven well pipe	Type III SMLS, ERW or CW	Type III A or CW	
Type IV NPS 3-8	Type IV Water well casing	Type IV SMLS, ERW or CW	Type IV A or CW	
API 5L	Welded and SMLS Line pipe	CW, ERW, SMLS DSAW	CW Grade 25 DSAW ERW & SMLS Grades A & B	Ladle % Max GR C MN P S A-25 .21 .60 .08 .06 SMLS A .22 .90 .04 .05 B .27 1.15 .04 .05 ERW A .21 .90 .04 .05 B .26 1.15 .04 .05
API 5LX	Welded and SMLS High test line pipe	ERW & SMLS DSAW	X-42 X-46 X-52 X-60 X-65 X-70 X-80	Ladle % Max % Min GR C MN P S CB V SMLS X-42 .29 1.25 .04 .05 X-46 .31 1.35 .04 .05 X-52 .31 1.35 .04 .05 X-60 .26 1.35 .04 .05 .02 ERW X-42 .28 1.25 .04 .05 X-46 .30 1.35 .04 .05 X-52 .30 1.35 .04 .05 X-60 .26 1.35 .04 .05 .005
Federal WWP-406	Comparable to A-120 (has been withdrawn)			
Federal WWP-404	Comparable to A-53			

CONTINUED

ASTM & API SPECIFICATIONS WITH COMPARABLE ANSI DESIGNATIONS

ASTM OR API DESIGNATIONS	ANSI DESIGNATIONS		TITLE
	CURRENT	REPLACED	
ASTM A-53	B-125.1	B-36.1	Welded & Seamless pipe
ASTM A-106	B-125.30	B-36.3	Seamless carbon steel pipe for high temperature service
ASTM A-120*	B-125-2	B-36.20	Black & galvanized and seamless steel pipe for ordinary uses
ASTM A-134	B-125.55	B-36.4	Electric-fusion (Arc) welded steel plate pipe (sizes 16" & over)
ASTM A-135	B-125.3	B-36.5	Electric resistance welded pipe
ASTM A-139	B-125.31	B-36.9	Electric-fusion (Arc) welded steel plate pipe (sizes 4" & over)
ASTM A-155	B-125.4	B-36.11	Electric fusion welded steel pipe for high temperature service
ASTM A-211	B-125.56	B-36.16	"Insert discontinued 1994"
ASTM A-312	B-125.16	B-36.26	Seamless and welded austenitic stainless steel pipe
ASTM A-333	B-125.17	B-36.40	Seamless and welded steel pipe for low temperature service
ASTM A-335	B-124.24	B-36.42	Seamless ferritic alloy steel pipe for high temperature service

* has been withdrawn

DIGEST OF COMMON - PIPE SPECIFICATIONS

CONTINUED

Specification and Size Range Where Indicated	Tensiles	Hydrostatic	Tests Bend	Flattening	Wall Tolerance	OD Tolerance
Type II NPS 1-12	MIN. P.S.I. Grade / Yield / Tensile CW / 25,000 / 45,000 A / 30,000 / 48,000 B / 35,000 / 60,000	yes	None Specified	None Specified	Min. wall shall not be more than 12.5% under nominal wall	1-1/2" & under + 1/64" - 1/32" 2" & over- +/- 1% of OD
Type III NPS 1-2 Type IV NPS 3-8 API 5L	MIN. P.S.I. Grade / Yield / Tensile A-25 / 25,000 / 45,000 A / 30,000 / 48,000 B / 35,000 / 60,000	yes	yes-for A-25 pipe 2-3/8 & smaller	yes	2-7/8" & smaller + 20% - 12.5% 3-1/2" OD + 18% - 12.5% 4" - 18" + 15% - 12.5% 20" & larger + 17.5% - 10%	 1.900 & under + .016" - .031" 2-38" - 4" OD +/- 1% 4-1/2" & over +/- .75%
API 5LX	MIN. P.S.I. Grade / Yield / Tensile X-42 / 42,000 / 60,000 X-46 / 46,000 / 63,000 X-52 / 52,000 / 66,000 X-60 / 60,000 / 75,000	yes	None Specified	yes - for ERW	+ 15% - 12.5%	+/- .75%
Federal WWP-406	Comparable to A-120					
Federal WWP-404	Comparable to A-53					

ASTM & API SPECIFICATIONS WITH COMPARABLE ANSI DESIGNATIONS

ASTM A-358	B-125.57	B-36.47	Electric fusion welded austenitic chromium-nickel alloy steel pipe for high temperature service
ASTM A-369	B-125.77	B-36.48	Carbon & ferritic alloy steel forged and bored pipe for high temperature service
ASTM A-376	B-125-25	B-36.43	Seamless austenitic steel pipe for high temperature temperature central station service
ASTM A-381	B-125.25	B-36.49	Metal arc welded steel pipe for high pressure transmission systems
ASTM A-405	B-125.26	B-36.44	Seamless ferritic alloy steel pipe specially heat treated for high temperature service
ASTM A-523	G-62.5		Plain end seamless & ERW steel pipe for high pressure pipe type cable circuits
ASTM A-524	B-125.37	B-36.56	Seamless C.S. pipe for process piping
ASTM A-530	B-125.20	B-36.57	General requirements for specialized carbon and alloy steel pipe
API 5L			Line pipe
API 5LX			High test line pipe
API 5LS			Spiral weld line pipe

FEDERAL

WWP-404c is similar to ASTM A-53 except that Government inspection and continuous identification marking of electric weld and seamless is mandatory. It covers black and galvanized welded and seamless pipe for flanging, bending, and coiling and for use with fresh water, oil, steam, air, and gas on shore plus a limited number of shipboard uses. Sizes 1/8 inch through 24 inch. WWP-406c is a federal specification comparable to ASTM A-120 (withdrawn 1988). Mills can certify that A-120 pipe in a distributor's stock meets all the requirements of WWP-406c.

A.W.W.A.

C-200 covers black welded and seamless pipe intended for the conveyance of water in sizes 6 inch and larger. Specification prescribes hydrostatic test pressures for sizes of pipe covered. Tensile, flattening, and bending tests are required.

ASME

B31.1 Code for pressure piping. Prescribes minimum requirements for design, manufacture, test, and installations of power piping systems for steam generating plants, central heating plants, and industrial plants.

B31.2 Fuel Gas Piping.

B31.3 Petroleum Refinery Piping.

B31.4 Liquid Petroleum Transportation Piping Systems.

B31.5 Refrigeration Piping.

B31.7 Nuclear Power Piping

B31.8 Gas Transmission and Distributing Piping Systems. Covers design, fabrication, installation, inspection, testing, and the safety aspects of operation and maintenance of gas transmission and distribution systems.

ANSI (ASME)

B36.10 American Standard for Wrought-Steel and Wrought-Iron pipe. Designates dimensions, weights, and schedule numbers for welded and seamless pipe. Schedules 10 through Schedules Double Extra Heavy (DXH/XXH).

B36.19 American Standard for Stainless Steel Pipe. Designates dimensions, weights, and schedule numbers for welded and seamless Stainless Steel Pipe, Schedules 5 through Schedules 80.

A.A.R.

M-111 covers black and galvanized welded and seamless pipe intended for coiling, bending, flanging, and other special purposes; and is suitable for welding. Purpose for which pipe is intended should be stated on orders. M-111 is comparable in most requirements to ASTM A-53.

M-130 covers black and galvanized welded and seamless pipe for ordinary uses in steam, water, gas, and air lines. Sizes 1/8 inch through 12 inch. Pipe to this specification is not intended for close coiling, bending, or high temperature service. M-130 is comparable in most requirements to ASTM A-120.

Wheatland Tube
A DIVISION OF ZEKELMAN INDUSTRIES

Zekelman Industries
Wheatland Tube Division, USA
700 Dock St. Sharon, PA 16146 USA

MTR By Run
Requested by KELLY PIPE COMPANY-AD

CERTIFIED MATERIAL TEST REPORT

Type 3.1/3.1.B in accordance with EN 10204/ISO 10204/EN 10474/ISO 10474/DIN50049

Heat Analysis

Run/Sample	Date	Item Description	C	Mn	P	S	CU	Ni	Cr	Mo	V	Si	Al	T/S	Y/S	El
6246/5	11/14/2011	3 STD GALV A53 PIPE PE W/2.0 ZINC	0.12	0.45	.011	.014	0.02	.010	.030	.004	.003	.008	.048	54729	33280	43

COMMENTS

This is to certify the product described herein was Made in the USA by the Wheatland Tube Division, USA* and sampled, tested and/or inspected in accordance with the latest revision, at the time of manufacture, of the specification listed above and fulfills the requirements in such respects. All the required mechanical, physical, hydrostatic, non-destructive, flattening, and bend tests have been successfully completed. The product(s) described above meet(s) one of the following specifications:

- Continuous Butt Weld (CW) Steel Pipe SureThread™ meeting the requirements of ASTM A53/A53M 2012/ASME SA53 2013 Type F, Grade A.
- Electric Resistance Welded (ERW) Steel Pipe meeting the requirements of ASTM A53/A53M 2012/ASME SA53 2013, Type E, Grade B.
- Electric Resistance Welded (ERW) Steel Pipe meeting the requirements of ASTM A135/A135M 2014, Type E, Grade A.
- Electric Resistance Welded (ERW) Steel Pipe meeting the requirements of ASTM A795/A795M 2013, Type E, Grade A.
- Steel Fence Pipe meeting the requirements of ASTM F1083 2013.
- Steel Coupling Stock meeting the requirements of ASTM A865/A865M 2012.
- API Line pipe meeting the requirements of ANSI/API Specification 5L 45th Edition or ANSI/API Specification 5CT 9th Edition.

*Note: 8 inch Schedule 10 ASTM A135 Black and Galvanized pipe is made in Canada (JMC Steel Group) and finished in the USA.
*Note: 8 inch through 16 inch ASTM A53 ERW Grade B pipe can be made in Canada (JMC Steel Group) and finished in the USA.
*Note: 18 inch ASTM A53 ERW Grade B pipe is made in the USA.

Michael S Ryan
Manager Technical Services

304 Threaded Stainless Drop Pipe

outokumpu Pipe Program

high performance stainless steel

Outokumpu Stainless Pipe
Tel: 800 731 7473
Fax: 800 416 7473
pipesales@outokumpu.com
outokumpu.com/pipe

Made in USA

Items shown are produced regularly for quick delivery from stock or within competitive industry lead-times. Please call an Outokumpu representative for availability.
Our Wildwood facility is ISO 9001 approved.

Stainless Steel Pipe Sizes and Weights

		SCH 5S		SCH 10S		SCH 40S		SCH 80S		SCH 10		SCH 20		SCH 30		SCH 40		SCH 60		SCH 80		SCH 100		SCH 120		SCH 140		SCH 160		Up to	
Nominal Pipe Size In.	Outside Dia. In.	Wall In.	Wt/Ft lbs	Wall In.	Wt/Ft lbs	Wall In.	Wt/Ft lbs	Wall In.	Wt/Ft lbs	Wall In.	Wt/Ft lbs	Wall In.	Wt/Ft lbs	Wall In.	Wt/Ft lbs	Wall In.	Wt/Ft lbs	Wall In.	Wt/Ft lbs	Wall In.	Wt/Ft lbs	Wall In.	Wt/Ft lbs	Wall In.	Wt/Ft lbs	Wall In.	Wt/Ft lbs	Wall In.	Wt/Ft lbs	Wall In.	Wt/Ft lbs
1/2	.840	.065	.5431	.083	.6773	.109	.8590	.147	1.098	—	—	—	—	—	—	.109	.8590	—	—	0.147	1.098	—	—	—	—	—	—	0.188	1.321	—	—
3/4	1.050	.065	.6902	.083	.8652	.113	1.141	.154	1.487	—	—	—	—	—	—	.113	1.141	—	—	0.154	1.487	—	—	—	—	—	—	0.219	1.962	—	—
1	1.315	.065	.8759	.109	1.417	.133	1.695	.179	2.192	—	—	—	—	—	—	.133	1.695	—	—	0.179	2.192	—	—	—	—	—	—	0.250	2.870	—	—
1 1/4	1.660	.065	1.118	.109	1.822	.140	2.294	.191	3.025	—	—	—	—	—	—	.140	2.294	—	—	0.191	3.025	—	—	—	—	—	—	0.250	3.800	—	—
1 1/2	1.900	.065	1.286	.109	2.104	.145	2.743	.200	3.665	—	—	—	—	—	—	.145	2.743	—	—	0.200	3.665	—	—	—	—	—	—	0.281	4.904	—	—
2	2.375	.065	1.619	.109	2.663	.154	3.687	.218	5.069	—	—	—	—	—	—	.154	3.687	—	—	0.218	5.069	—	—	—	—	—	—	0.344	7.532	—	—
2 1/2	2.875	.083	2.498	.120	3.564	.203	5.847	.276	7.733	—	—	—	—	—	—	.203	5.847	—	—	0.276	7.733	—	—	—	—	—	—	0.375	10.106	—	—
3	3.500	.083	3.057	.120	4.372	.216	7.647	.300	10.348	—	—	—	—	—	—	.216	7.647	—	—	0.300	10.348	—	—	—	—	—	—	0.438	14.458	—	—
3 1/2	4.000	.083	3.505	.120	5.019	.226	9.194	.318	12.622	—	—	—	—	—	—	.226	9.194	—	—	0.318	12.622	—	—	—	—	—	—	—	—	—	—
4	4.500	.083	3.952	.120	5.666	.237	10.891	.337	15.124	—	—	—	—	—	—	.237	10.891	—	—	0.337	15.124	—	—	0.438	19.179	—	—	0.531	22.719	—	—
5	5.563	.109	6.409	.134	7.842	.258	14.754	.375	20.972	—	—	—	—	—	—	.258	14.754	—	—	0.375	20.972	—	—	0.500	27.290	—	—	0.625	33.27	—	—
6	6.625	.109	7.656	.134	9.376	.280	19.152	.432	28.841	—	—	—	—	—	—	.280	19.152	—	—	0.432	28.841	—	—	0.562	36.73	—	—	0.719	45.78	—	—
8	8.625	.109	10.01	.148	13.52	.322	28.82	.500	43.79	—	—	.250	22.57	.277	24.93	.322	28.82	0.406	35.97	0.500	43.790	0.594	51.43	0.719	61.28	0.812	68.39	0.906	75.39	—	—
10	10.750	.134	15.33	.165	18.83	.365	40.86	.500	55.25	—	—	.250	28.30	.307	34.56	.365	40.86	0.500	55.25	0.594	65.030	0.719	77.75	0.844	90.13	1.000	105.11	1.125	116.73	—	—
12	12.750	.156	21.18	.180	24.39	.375	50.03	.500	66.03	—	—	.250	33.69	.330	44.18	.406	54.03	0.562	73.84	0.688	89.460	0.844	108.32	1.000	126.67	1.125	140.98	1.312	161.77	—	—
14	14.000	.156	23.28	.188	27.99	.375	55.08	.500	72.77	.250	37.06	.312	46.04	.375	55.08	.438	64.03	0.594	85.84	0.750	107.130	0.938	132.08	1.094	152.20	1.250	171.81	1.406	190.88	—	—
16	16.000	.165	28.17	.188	32.05	.375	63.16	.500	83.55	.250	42.45	.312	52.76	.375	63.16	.500	83.55	0.656	108.51	0.844	137.890	1.031	166.37	1.219	194.23	1.438	225.73	1.594	247.54	—	—
18	18.000	.165	31.72	.188	36.10	.375	71.25	.500	94.33	.250	47.84	.312	59.49	.438	82.92	.562	105.65	0.750	139.47	0.938	172.520	1.156	209.90	1.375	246.42	1.562	276.79	1.781	311.39	—	—
20	20.000	.188	40.15	.218	46.49	.375	79.33	.500	105.11	.250	53.23	.375	79.33	.500	105.11	.594	124.26	0.812	167.96	1.031	210.820	1.281	258.49	1.500	299.15	1.750	344.29	1.969	382.72	—	—
22	22.000	.188	44.21	.218	51.19	.375	87.42	.500	115.89	.250	58.62	.375	87.42	.500	115.89	—	—	0.875	199.26	1.125	253.160	1.375	305.71	1.625	356.92	1.875	406.78	2.125	455.29	—	—
24	24.000	.218	55.98	.250	64.01	.375	95.50	.500	126.67	.250	64.01	.375	95.50	.562	142.00	.688	172.90	0.969	240.58	1.219	299.360	1.531	370.83	1.812	433.41	2.062	487.65	2.344	547.21	3.000	679.14
26	26.000	—	—	—	—	—	—	—	—	.312	86.40	.500	137.45	—	—	—	—	—	—	—	—	—	—	—	—	—	—	—	—	3.000	743.82
28	28.000	—	—	—	—	—	—	—	—	.312	93.12	.500	148.23	.625	184.44	—	—	—	—	—	—	—	—	—	—	—	—	—	—	3.000	808.50
30	30.000	.250	80.18	.312	99.85	—	—	—	—	.312	99.85	.500	159.01	.625	197.91	—	—	—	—	—	—	—	—	—	—	—	—	—	—	3.000	873.18
32	32.000	.250	85.57	—	—	—	—	—	—	—	—	—	—	—	—	—	—	—	—	—	—	—	—	—	—	—	—	—	—	3.000	937.86

Items shown in gray are not part of our standard manufacturing capabilities. For most 300 series stainless steels computed weights based on: wt/ft = 10.78 (OD-Wall) Wall.

In addition to standard specification requirements Outokumpu can offer the following VALUE ADDED SERVICES:

Eddy Current
Hydrostatic Testing
Radiographic Testing - Film and Real Time Radiography
Penetrant Testing
Positive Material Identification - X-ray fluorescence, and optical emission (Carbon)
Mechanical Test Laboratory: • Mechanical Testing - Tensile, bend testing, etc. • Corrosion testing
Beveling, end caps, girth welding, special line marking
Export packing
Fast track program for one week lead time on small orders
Up to 60 foot lengths

Grades

Core range for corrosive environments	304/4301, 304L/4307, 321/4541, 347/4550
Supra range for highly corrosive environments	316/4401, 316L/4404
Forta range for duplex and other high strength	DX 2205 Code Plus Two®, LDX 2101, Zeron 100, SDX 2507
Ultra range for extremely corrosive environments	904L, 254 SMO, 317, 317L, 317LM, 317LMN
Therma range for high service temperatures	253 MA, 310S/4845, 304H/4948, 321H/4878, 347H/4550, 153 MA, 316H, 309S/4833, 309H
Nickel alloys	C276, 600, 601, 622, 625, 800, 800H, 800HT, 825, Alloy 20
Hastelloy®	B-2, B-3, G-30, C-4, C-22, C-276, C-2000
ASTM	A312, A358, A778, A790, A928
*Applicable ASTM A & B and ASME SA & SB specifications	

Additional grades available upon request.

				SCH 10 through 36.00" OD				SCH 20 through 36.00" OD				SCH 40 for 36.00" OD																	
Nominal Pipe	Outside	Wall	Wt/Ft	Wall	Wt/Ft	Wall	Wt/Ft	Wall	Wt/Ft	Wall	Wt/Ft	Wall	Wt/Ft	Wall	Wt/Ft	Wall	Wt/Ft	Wall	Wt/Ft	Wall	Wt/Ft	Wall	Wt/Ft	Wall	Wt/Ft	Wall	Wt/Ft	Cont.	Wall	Wt/Ft
Size	Dia. in.	in.	lbs	in.	lbs	in.	lbs	in.	lbs	in.	lbs	in.	lbs	in.	lbs	in.	lbs	in.	lbs	in.	lbs	in.	lbs	in.	lbs	in.	lbs		in.	lbs
32	32.000	.250	85.57	.312	106.58	.375	127.84	.500	169.79	.650	219.67	.750	252.66	.825	277.25	1.000	334.18	1.125	374.44	1.375	453.94	1.500	493.19	1.750	570.67	→	3.000	937.86
34	34.000	.250	90.96	.312	113.30	.375	135.93	.500	180.57	.650	233.68	.750	268.83	.825	295.04	1.000	355.74	1.125	398.69	1.375	483.58	1.500	525.53	1.750	608.40	→	3.000	1002.54
36	36.000	.250	96.35	.312	120.03	.375	144.01	.500	191.35	.650	247.70	.750	285.00	.825	312.83	1.000	377.30	1.125	422.95	1.375	513.23	1.500	557.87	1.750	646.13	→	3.000	1067.22
38	38.000	.250	101.74	.312	126.76	.375	152.10	.500	202.13	.650	261.71	.750	301.17	.825	330.62	1.000	398.86	1.125	447.20	1.375	542.87	1.500	590.21	1.750	683.86	→	3.000	1131.90
40	40.000	.250	107.13	.312	133.49	.375	160.18	.500	212.91	.650	275.73	.750	317.34	.825	348.40	1.000	420.42	1.125	471.46	1.375	572.52	1.500	622.55	1.750	721.59	→	3.000	1196.58
42	42.000	.250	112.52	.312	140.21	.375	168.27	.500	223.69	.650	289.74	.750	333.51	.825	366.19	1.000	441.98	1.125	495.71	1.375	602.16	1.500	654.89	1.750	759.32	→	3.000	1261.26
44	44.000	.250	117.91	.312	146.94	.375	176.35	.500	234.47	.650	303.75	.750	349.68	.825	383.98	1.000	463.54	1.125	519.97	1.375	631.81	1.500	687.23	1.750	797.05	→	3.000	1325.94
46	46.000	.250	123.30	.312	153.67	.375	184.44	.500	245.25	.650	317.77	.750	365.85	.825	401.76	1.000	485.10	1.125	544.22	1.375	661.45	1.500	719.57	1.750	834.78	→	3.000	1390.62
48	48.000	.250	128.69	.312	160.39	.375	192.52	.500	256.03	.650	331.78	.750	382.02	.825	419.55	1.000	506.66	1.125	568.48	1.375	691.10	1.500	751.91	1.750	872.51	→	3.000	1455.30
50	50.000	.250	134.08	.312	167.12	.375	200.61	.500	266.81	.650	345.80	.750	398.19	.825	437.34	1.000	528.22	1.125	592.73	1.375	720.74	1.500	784.25	1.750	910.24	→	3.000	1519.98
52	52.000	.250	139.47	.312	173.85	.375	208.69	.500	277.59	.650	359.81	.750	414.36	.825	455.12	1.000	549.78	1.125	616.99	1.375	750.39	1.500	816.59	1.750	947.97	→	3.000	1584.66
54	54.000	.250	144.86	.312	180.57	.375	216.78	.500	288.37	.650	373.82	.750	430.53	.825	472.91	1.000	571.34	1.125	641.24	1.375	780.03	1.500	848.93	1.750	985.70	→	3.000	1649.34
56	56.000	.250	150.25	.312	187.30	.375	224.86	.500	299.15	.650	387.84	.750	446.70	.825	490.70	1.000	592.90	1.125	665.50	1.375	809.68	1.500	881.27	1.750	1023.43	→	3.000	1714.02
58	58.000	.250	155.64	.312	194.03	.375	232.95	.500	309.93	.650	401.85	.750	462.87	.825	508.49	1.000	614.46	1.125	689.75	1.375	839.32	1.500	913.61	1.750	1061.16	→	3.000	1778.70
60	60.000	.250	161.03	.312	200.75	.375	241.03	.500	320.71	.650	415.87	.750	479.04	.825	526.27	1.000	636.02	1.125	714.01	1.375	868.97	1.500	945.95	1.750	1098.89	→	3.000	1843.38
62	62.000	.250	166.42	.312	207.48	.375	249.12	.500	331.49	.650	429.88	.750	495.21	.825	544.06	1.000	657.58	1.125	738.26	1.375	898.61	1.500	978.29	1.750	1136.62	→	3.000	1908.06
64	64.000	.250	171.81	.312	214.21	.375	257.20	.500	342.27	.650	443.89	.750	511.38	.825	561.85	1.000	679.14	1.125	762.52	1.375	928.26	1.500	1010.63	1.750	1174.35	→	3.000	1972.74
66	66.000	.250	177.20	.312	220.93	.375	265.29	.500	353.05	.650	457.91	.750	527.55	.825	579.63	1.000	700.70	1.125	786.77	1.375	957.90	1.500	1042.97	1.750	1212.08	→	3.000	2037.42
68	68.000	.250	182.59	.312	227.66	.375	273.37	.500	363.83	.650	471.92	.750	543.72	.825	597.42	1.000	722.26	1.125	811.03	1.375	987.55	1.500	1075.31	1.750	1249.81	→	3.000	2102.10
↓	↓	↓	↓	↓	↓	↓	↓	↓	↓	↓	↓	↓	↓	↓	↓	↓	↓	↓	↓	↓	↓	↓	↓	↓	↓		↓	↓
120	120.000	.250	322.73	.312	402.55	.375	483.58	.500	644.11	.650	836.29	.750	964.14	.825	1059.88	1.000	1282.82	1.125	1441.66	1.375	1758.32	1.500	1916.15	1.750	2230.79	→	3.000	3783.78

outokumpu
high performance stainless steel

Outokumpu Stainless Pipe
Tel: 800 731 7473
Fax: 800 416 7473
pipesales@outokumpu.com
outokumpu.com/pipe

Information given in this brochure may be subject to alterations without notice. Care has been taken to ensure that the contents of this publication are accurate but Outokumpu and its affiliated companies do not accept responsibility for errors or for information which is found to be misleading. Suggestions for or descriptions of the end use or application of products or methods of working are for information only and Outokumpu and its affiliated companies accept no liability in respect thereof. Before using products supplied or manufactured by the company the customer should satisfy himself of their suitability.
LDX 2101® is a trademark of Outokumpu Stainless.
254 SMO® is a trademark of Outokumpu Stainless.
2205 Code Plus Two® is a trademark of Outokumpu Stainless, Inc.

Ductile Iron Check Valve — Model 80DI-VFD

FLOMATIC®
Flomatic Corporation

Sizes 3" thru 8" / 75mm thru 200mm

NSF/ANSI 61 IAPMO R&T ™ | LOW-LEAD IAPMO R&T ™ NSF/ANSI 372 | #1 Pb Lead-Free

Materials

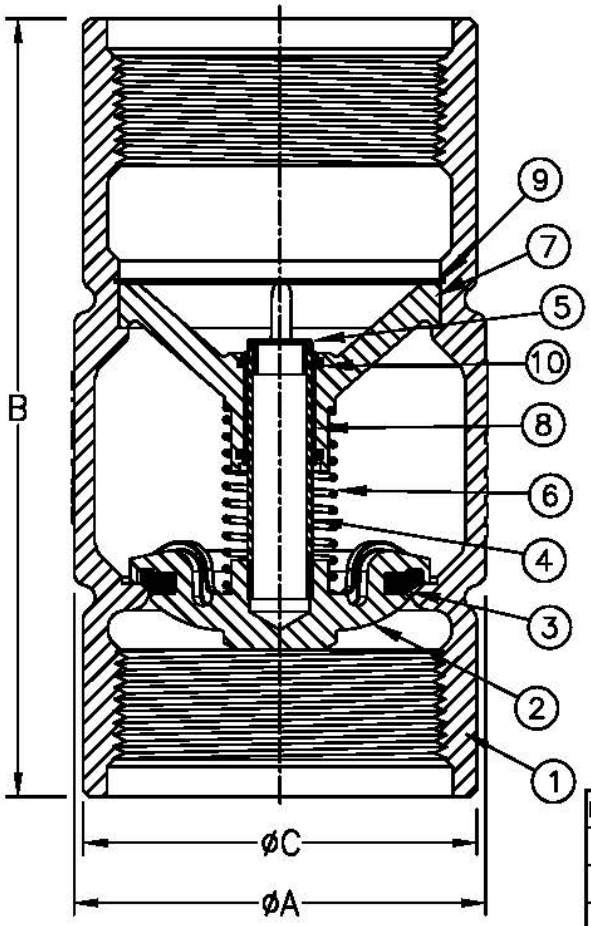

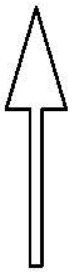

Max Temp 180°F (82°C)
Max Pressure 600psi (42bar)
Optional Female 8 round Threads

Item #	Qty	Description	Material	ASTM
1	1	Body (Epoxy Coated)	Ductile Iron	65-45-12
2	1	Poppet (Epoxy Coated)	Ductile Iron	65-45-12
3	1	Seat Disc	Buna-N	N-5007*
4	1	Stem	Stainless Steel	316
5	1	Stem Cap	Engineered Composite	Polyethelyne
6	1	Spring	Stainless Steel	302
7	1	Stem Guide (Epoxy Coated)	Ductile Iron	65-45-12
8	1	Bushing	Engineered Composite	----
9	1	Retaining Ring	Stainless Steel	302
10	2	Wiper	Engineered Composite	Molythane

*8" uses N-6010

Dimensions (FNPT x FNPT)

Size		Part #	A		B		C		Weight	
Inch	mm		Inch	mm	Inch	mm	Inch	mm	lbs	kg
3	75	7938VFD	4-3/8	111	8-37/64	218	4-13/64	107	12	5.5
4	100	7939VFD	5-3/4	146	11-1/4	286	5-1/2	140	27	12
5	125	4088VFD	6-29/32	175	13-5/8	346	6-19/32	167	40	18
6	150	4089VFD	8	203	15-9/64	385	7-21/32	194	63	29
8	200	4090VFD	9-11/16	246	15-27/32	402	9-11/16	246	87	40

Flomatic Corporation can accept no responsibility for possible errors in catalogues, brochures and other printed material. Flomatic Corporation reserves the right to alter its products without notices. This also applies to product already agreed. All trademarks in this material are property of the respective companies. All right reserved. ©2016 Flomatic Corporation. The drawings & information on this drawing sheet are the sole & exclusive property of Flomatic Corporation. Any reproduction, distribution, display or use of these drawings or information in whole or in part without written authorization of Flomatic Corporation is strictly prohibited.

FLOMATIC® VALVES

November 21, 2011
Dwg No: S7939DI-VFD Rev: F (8/16)

FLOMATIC CORPORATION
GLENS FALLS, N.Y. 12801
PHONE (518) 761-9797
FAX (518) 761-9798

WELD ON PITLESS ADAPTERS

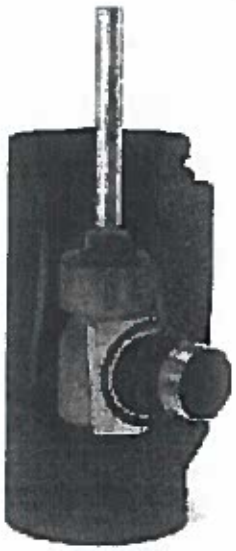

WELD ON PITLESS ADAPTER FOR 8", 10" & 12" WELLS

FEATURES

- Durable fabricated steel housing - brass elbow, stainless steel discharge, large drain hole in the pull pipe port, 3" FIP pull pipe, 3" FIP drop pipe, 3" stainless steel MIP discharge and large o-ring seal.
- Designed to be welded onto 8", 10" and 12" I.D. steel casing.
- Designed for shallow or deep settings and high working pressures up to 300 PSI.
- Durable steel housing with tear drop design for EZ bottom welding.
- Water contacts only 304 stainless steel and brass elbow for long term corrosion protection.
- No obstruction in the casing I.D. when the brass elbow is removed.
- Stainless steel 10° tapered slip fitting design on the elbow for easy installation and removal at time of servicing.
- Large O-Ring neoprene seal.
- Large drain hole in the 3" FIP pull pipe port.
- Designed for 10,000 lbs. load.
- Also available factory welded to casing.

WELD ON PITLESS ADAPTER

Order No.	Well Size	Drop Pipe Size	Discharge Size	Weight (lbs)
8123BEZ	8", 10" & 12" I.D.	3" Female NPT	3" Male NPT	27
83BEZ	Kit for 8" x 18" L.	3" Female NPT	3" Male NPT	75
83BEZ6	Kit for 6"	3" Female NPT	3" Male NPT	90
103BEZ	Kit for 10" x 18" L.	3" Female NPT	3" Male NPT	95
123BEZ	Kit for 12" x 18" L	3" Female NPT	3" Male NPT	115
8123BEZ6	8"-12" w/nipple 6" L.	3" Female NPT	3" Male NPT	30

MS6000C

6” Submersible Motors

be
think
innovate

GRUNDFOS

A closer look at the MS6000C

THRUST BEARING
High capacity thrust bearings provide long life durability even on the toughest conditions.

HP	Pound-Force (lbf)
7.5	1,686
10	1,686
15	6,070
20	6,070
25	6,070
30	6,070
40	6,070

ROBUST STAINLESS STEEL
Engineered design with robust and proven corrosion resistant 304 Stainless Steel motor exterior as standard, 904L Stainless Steel is optional for highly aggressive water applications.

EN Rating	AISI Rating
1.4301	304
1.4539	904L

INCREASED TEMPERATURE RATING
T40 rating indicates the increased ambient water temperature rating to 104°F (40°C) that withstands higher temp rating which provides durability and longer life of the motor in lower flow, closed loop, and warmer water applications. Use of FDA food grade approved SML-3 motor fluid provides frost and corrosion protection. T40 is standard, T60 is optional.

Temp Rating	Max. Temp	Min. Temp
T40	104°F (40°C)	-4°F (-20°C)
T60	140°F (60°C)	-4°F (-20°C)

CAST STAINLESS STEEL ENDBELL
Cast 304 Stainless Steel endbell with NEMA Standard for a solid frame mount of the flange.

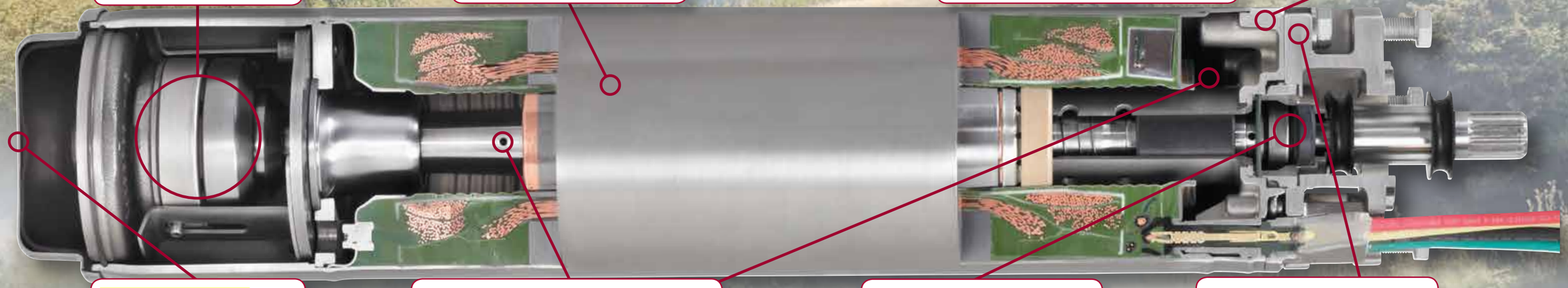

RUGGED SLIM DIAMETER
Stainless Steel endbell gives rugged protection going down the well while smaller diameter motor is easier to install.

COOLING AND CIRCULATION
Excellent cooling and circulation characteristics include hollow shaft, flow friendly internal design, and large internal capacity allows better cooling and longer motor life.

SHAFT SEAL
Shaft seals are with a durable Silicon / Silicon seal faces and use NBR rubber to standup to abrasive materials making for a long seal life.

FLANGE
Robust cast 304 Stainless Steel NEMA Standard flange added to top of motor to assure motor replacements in the field will mount onto any pump in the industry pulled from the well.

MS6000C

The MS6000C series cover a range of water supply applications that require power from 7.5 to 40 HP, 3-phase.

All external surfaces of Grundfos MS motors in contact with water are made of stainless steel DIN W. Nr. 1.4301 (AISI 304) unless otherwise specified R-versions made from DIN W. Nr. 1.4539 (AISI 904 L) are also available for aggressive water. MS motors are fitted with a built-in Tempcon sensor to prevent overheaing – a solution which together with a Grundfos MP 204 eliminates the need for external temperature sensors.

CABLE CONNECTION SEAL

1. Two bolt stainless steel connection frame for absolute solid mounting and protection
2. Primary compression lip seals the lead and motor from external fluids
3. Pliable secondary seal contains 3-Wire connections to motor for reliable, long lasting seal
4. Ground Tab bolts to flange on motor for premium grounding
5. 3-Wire plus ground wire all fully potted in connection body for a complete and reliable seal

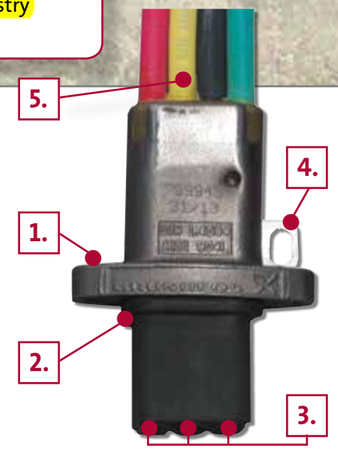

MS6

MS6000C

Phase	Voltage	HP	SS #	Seal	Rubber	MS6 Material #	MS6000C Material #
3	208-230	7.5	304	Sic/Sic	NBR	96168783	96166181
3	208-230	10	304	Sic/Sic	NBR	96168784	96166182
3	208-230	15	304	Sic/Sic	NBR	96168786	96166184
3	208-230	20	304	Sic/Sic	NBR	96168788	96166186
3	208-230	25	304	Sic/Sic	NBR	96168789	96166187
3	208-230	30	304	Sic/Sic	NBR	96168790	96166188
3	440-460	7.5	304	Sic/Sic	NBR	96168763	96166161
3	440-460	10	304	Sic/Sic	NBR	96168764	96166162
3	440-460	15	304	Sic/Sic	NBR	96168766	96166164
3	440-460	20	304	Sic/Sic	NBR	96168768	96166166
3	440-460	25	304	Sic/Sic	NBR	96168769	96166167
3	440-460	30	304	Sic/Sic	NBR	96168770	96166168
3	440-460	40	304	Sic/Sic	NBR	96168772	96166170

Comparison from MS6 to MS6000C	
MS6	MS6000C
Temperature	
T30	T40
86° F / 30° C	104° F / 40° C
Shaft Seal	
SiC / SiC	SiC / SiC
NBR	NBR
Embedding Material	
Sand added to Epoxy	Aluminum Oxide added to Epoxy
Thrust Bearing	
7.5 and 10 HP	
7.5 kN / 1,686 ft. lbs.	7.5 kN / 1,686 ft. lbs.
15, 20, 25, 30 and 40 HP	
27.5 kN / 6182 ft. lbs.	27 kN / 6,070 ft. lbs.
Pump Mount	
NEMA	NEMA with Flange
Stainless Steel	
304 Standard	304 Standard
904L Optional	904L Optional
Cable Connection	
3-Wire Plus Ground	3-Wire Plus Ground
Premium Quality	Premium Quality
Included with Motor	Included with Motor
Available Separately	Available Separately
Diameter	
5.63 in. / 143 mm	5.49 in. / 139.5 mm
Agency Approval	
cCSAus	cCSAus
Pricing	
Feb. 1st 2014 List Price	Feb. 1st 2014 List Price

L-MS-SL-002 Rev.7/14 (US)

GRUNDFOS Kansas City
17100 West 118th Terrace
Olathe, Kansas 66061
Phone: (913) 227-3400
Fax: (913) 227-3500

www.grundfos.us

GRUNDFOS Canada
2941 Brighton Road
Oakville, Ontario
L6H 6C9
Phone: (905) 829-9533
Fax: (905) 829-9512

www.grundfos.ca

GRUNDFOS Mexico
Boulevard TLC No. 15
Parque Industrial Stiva Aeropuerto
C.P. 66600 Apodaca, N.L. Mexico
Phone: 011-52-81-8144 4000
Fax: 011-52-81-8144 4010

www.grundfos.mx

The name Grundfos, the Grundfos logo, and be think innovate are registered trademarks owned by Grundfos Holding A/S or Grundfos A/S, Denmark. All rights reserved worldwide.

GRUNDFOS

WELL SEALS

PACIFIC HYDRO™ STEEL SANITARY WELL SEALS

MADE in the USA

Features:

- Made from high strength steel
- Steel plates powder coated for durable finish
- Utilizes soft poly-vinyl packers
- Unique packer design allows for wide range of casing sizes
- Bolts and washers zinc plated
- 1" threaded wire drop hole standard on most well seals
- 1-1/4" threaded wire drop holes standard on 10" and larger seals
- Vent opening 1/2" on 4" to 7" well seals
- Vent opening 3/4" on 8" well seals and larger

An additional 1.25-inch access hole will be installed into the selected well seal. The seal will have 2-1.25-inch port, 1-1-inch electrical port, and one .75-inch vent hole.

Part Number	Model Number	Size Casing I.D. I.D. X Drop Pipe	Top Plate Thickness	Working Load (Lbs.)	Weight (Lbs.)	List Price Each
954010	WS41	4" to 4 -/4" x 1"	3/16"	2,141	1.80	
954011	WS41.25	4" to 4-1/4" x 1-1/4"	3/16"	2,141	1.76	
954012	WS41.5	4" to 4-1/4" x 1-1/2"	3/16"	2,141	1.65	
954013	WS42	4" to 4-1/4" x 2"	3/16"	2,141	1.55	
954004	WS5OD1	4-1/2" to 4-3/4" x 1"	3/16"	1,520	2.65	
954005	WS5OD1.25	4-1/2" to 4-3/4" x 1-1/4"	3/16"	1,520	2.35	
954006	WS6OD1	5-3/16" to 5-7/16" x 1"	3/16"	1,520	2.90	
954007	WS6OD1.25	5-3/16" to 5-7/16" x 1-1/4"	3/16"	1,520	2.90	
954015	WS51	5" to 5-1/4" x 1"	3/16"	1,450	2.70	
954016	WS51.25	5" to 5-1/4" x 1-1/4"	3/16"	1,450	2.40	
954017	WS51.5	5" to 5-1/4" x 1-1/2"	3/16"	1,450	2.55	
954018	WS52	5" to 5-1/4" x 2"	3/16"	1,450	2.85	
954020	WS61	5-3/4" to 6-1/4" x 1"	3/16"	1,100	3.60	
954021	WS61.25	5-3/4" to 6-1/4" x 1-1/4"	3/16"	1,100	3.60	
954022	WS61.5	5-3/4" to 6-1/4" x 1-1/2"	3/16"	1,100	3.35	
954023	WS62	5-3/4" to 6-1/4" x 2"	3/16"	1,100	3.35	
954024	WS62.5	5-3/4" to 6-1/4" x 2-1/2"	3/8"	9,170	4.70	
954025	WS63	5-3/4" to 6-1/4" x 3"	3/8"	9,170	5.00	
954026	WS6 1/4 x 1	5-3/4" to 6-1/4" x 1"	3/16"	1,150	3.60	
954027	WS6 1/4 x 1.25	5 -/4" to 6-1/4" x 1-1/4"	3/16"	1,150	3.60	
954029	WS6 1/4 x 2	5-3/4" to 6-1/4" x 2"	3/16"	1,150	3.35	
954030	WS71	6-5/8" to 7-1/4" x 1"	1/4"	2,000	5.45	
954031	WS71.25	6-5/8" to 7-1/4" x 1-1/4"	1/4"	2,000	5.65	
954032	WS71.5	6-5/8" to 7-1/4" x 1-1/2"	1/4"	2,000	5.40	
954033	WS72	6-5/8" to 7-1/4" x 2"	1/4"	2,000	5.30	
954036	WS81	7-3/4" to 8-1/4" x 1"	1/4"	1,650	7.45	
954037	WS81.25	7-3/4" to 8-1/4" x 1-1/4"	1/4"	1,650	7.30	
954038	WS81.5	7-3/4" to 8-1/4" x 1-1/2"	1/4"	1,650	6.75	
954039	WS82	7-3/4" to 8-1/4" x 2"	1/4"	1,650	6.90	
954040	WS8.25	7-3/4" to 8-1/4" x 2-1/2"	3/8"	6,900	8.35	
954041	WS83	7-3/4" to 8-1/4" x 3"	1/2"	9,000	7.50	
954042	WS84	7-3/4" to 8-1/4" x 4"	5/8"	22,500	9.60	
954045	WS101	9-3/4" to 10-1/4" x 1"	3/8"	3,700	11.75	
954046	WS101.25	9-3/4" to 10-1/4" x 1-1/4"	3/8"	3,700	11.95	
954047	WS101.5	9-3/4" to 10-1/4" x 1-1/2"	3/8"	3,700	15.05	
954048	WS102	9-3/4" to 10-1/4" x 2"	3/8"	3,700	14.70	
954049	WS102.5	9-3/4" to 10-1/4" x 2-1/2"	1/2"	8,600	17.15	
954050	WS103	9-3/4" to 10-1/4" x 3"	5/8"	16,200	19.55	
954051	WS104	9-3/4" to 10-1/4" x 4"	5/8"	16,200	17.65	
954052	WS105	9-3/4" to 10-1/4" x 5"	3/4"	30,000	17.50	
954053	WS106	9-3/4" to 10-1/4" x 6"	3/4"	30,000	15.10	
954054	WS121	11-3/4" to 12-1/4" x 1"	1/4"	885	26.00	
954055	WS121.25	11-3/4" to 12-1/4" x 1-1/4"	3/8"	2,870	26.00	
954056	WS121.5	11-3/4" to 12-1/4" x 1-1/2"	3/8"	2,870	26.00	
954057	WS122	11-3/4" to 12-1/4" x 2"	1/2"	6,600	26.00	
954058	WS122.5	11-3/4" to 12-1/4" x 2-1/2"	1/2"	6,600	26.00	
954059	WS123	11-3/4" to 12-1/4" x 3"	5/8"	12,000	26.00	
954060	WS124	11-3/4" to 12-1/4" x 4"	5/8"	12,000	26.00	
954061	WS125	11-3/4" to 12-1/4" x 5"	3/4"	20,500	26.00	
954062	WS126	11-3/4" to 12-1/4" x 6"	3/4"	21,000	26.00	
954070	WS141.25	13 1/4" to 14" x 1 1/4"	3/8"	2,280	40	
954071	WS141.5	13 1/4" to 14" x 1 1/2"	1/2"	4,850	49	
954072	WS142	13 1/4" to 14" x 2"	1/2"	4,850	48	
954073	WS142.5	13 1/4" to 14" x 2 1/2"	1/2"	4,850	47	
954074	WS143	13 1/4" to 14" x 3"	5/8"	9,450	54	
954075	WS144	13 1/4" to 14" x 4"	3/4"	16,000	59	
954076	WS145	13 1/4" to 14" x 5"	3/4"	16,000	67	
954077	WS146	13 1/4" to 14" x 6"	1"	38,000	67	
954080	WS164	15 1/4" to 16" x 4"	3/4"	12,500	80	
954081	WS166	15 1/4" to 16" x 6"	1"	30,000	91	

See separate price list

- **NOTE:**
- **Custom sizes available. Contact factory for quotation.**
- **Also available manufactured from stainless steel.**

PUMP CABLE

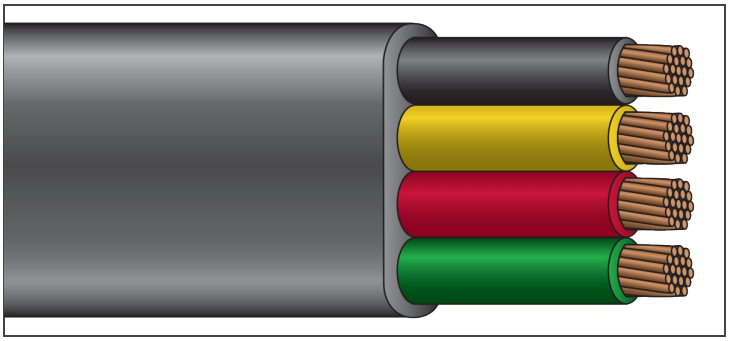

THW or RHW-2/FLAT BLACK

Submersible Pump Cable

600 Volt Copper, Heavy Duty Flat

Description:

Stranded copper conductors are insulated with color coded PVC *(type THW or RHW-2)* and configured flat and parallel with green insulated ground and overall PVC jacket applied directly over the conductors with a non-penetrating web.

Application:

Suitable for use within the well casing to supply power to the submersible pump and where extra mechanical protection and flexibility during installation and operation are required.

Standards:

UL Standard 83 *(UL 44/854 on 250 Kcmil and larger)*
Temperature Rated at 75°C Wet/Dry *(90°C Wet/Dry on 250 Kcmil and larger)*
Color Code: Black, Red, Yellow, Green *(ground),*
Printed Number and Color *(1/0 AWG and larger)*
Acid, Alkali, Oil, Grease, Abrasion and Crush Resistant
Direct Burial[1] *(250 Kcmil and larger)*
Weather, Ozone and Sunlight Resistant Jacket
RoHS Compliant

[1] *#12 AWG through 4/0 AWG Direct Burial available upon request.*

Part Number	Conductor Size *Power* (AWG or Kcmil)	Conductor Size *Ground* (AWG or Kcmil)	Dimensions Insulation (in.)	Dimensions Jacket (in.)	Dimensions O.D. (in.)	Standard Packaging (500')	Standard Packaging (1,000')	Standard Packaging (bulk)	Ampacity NEC§	Weight (lb./1000')
PFB14/2GG	14/2 (7 str)	14 (7 str)	0.045	0.045	0.25 x 0.58			X	15	114
PFB12/2GG	12/2 (19 str)	12 (19 str)	0.045	0.045	0.27 x 0.64	X	X		20	154
PFB10/2GG	10/2 (19 str)	10 (19 str)	0.045	0.045	0.30 x 0.71	X	X		30	212
PFB8/2GG	8/2 (19 str)	10 (19 str)	0.060	0.045	0.35 x 0.82	X	X		50	278
PFB14/3GG	14/3 (7 str)	14 (7 str)	0.045	0.045	0.25 x 0.74	X	X		15	147
PFB12/3GG	12/3 (19 str)	12 (19 str)	0.045	0.045	0.27 x 0.82	X	X		20	192
PFB10/3GG	10/3 (19 str)	10 (19 str)	0.045	0.045	0.30 x 0.91	X	X		30	258
PFB8/3GG	8/3 (19 str)	10 (19 str)	0.060	0.045	0.35 x 1.08	X	X		50	376
PFB6/3GG	6/3 (19 str)	8 (19 str)	0.060	0.045	0.39 x 1.26	X	X		65	528
PFB4/3GG	4/3 (19 str)	8 (19 str)	0.060	0.045	0.44 x 1.40	X	X		85	726
PFB2/3GG	2/3 (19 str)	6 (19 str)	0.060	0.045	0.49 x 1.60	X	X		115	1,049
PFB1/03GG	1/03 (19 str)	6 (7 str)	0.080	0.060	0.64 x 1.97			X	150	1,632
PFB2/03GG	2/03 (19 str)	6 (7 str)	0.080	0.060	0.68 x 2.11			X	175	1,958
PFB3/03GG	3/03 (19 str)	4 (7 str)	0.080	0.060	0.73 x 2.30			X	200	2,410
PFB4/03GG	4/03 (19 str)	4 (7 str)	0.080	0.060	0.79 x 2.48			X	230	2,917
PFB250/3GG	250/3 (37 str)	4 (7 str)	0.095	0.080	0.92 x 2.80			X	255	3,529
PFB350/3GG	350/3 (37 str)	3 (7 str)	0.095	0.080	1.03 x 3.13			X	310	4,701
PFB500/3GG	500/3 (37 str)	2 (7 str)	0.095	0.080	1.15 x 3.52			X	380	6,394

§Per NEC Table 310.15 (B)(16). NOTE: The data shown is approximate and subject to standard industry tolerances.

SUBMERSIBLE PUMPS

6" STAINLESS STEEL SR SERIES

FPS

FEATURES

- Stainless steel impellers and diffusers to resist corrosion
- Heavy-duty stainless steel shell assures permanent alignment of all components to increase longevity and enables higher pressures than strap designs
- PTFE floating wear ring, ceramic bearing journal, and Nitrile rubber fluted bearing ensure durability against wear for long-lasting performance and reliability
- Suited to operate in horizontal position
- Built-in check valve to protect the pump against water hammer
- Energy-efficient hydraulic design for cost effective operation

SPECIFICATIONS

- Capacities of 70–150 gpm
- Maximum operating temperature of 140 °F/60 °C for 304 stainless steel and 194 °F/90 °C for 316 stainless steel

APPLICATIONS

- Industrial
- Agricultural
- Irrigation
- Commercial

Franklin Electric

SUBMERSIBLE PUMPS

6" STAINLESS STEEL SR SERIES

PERFORMANCE

100 GPM

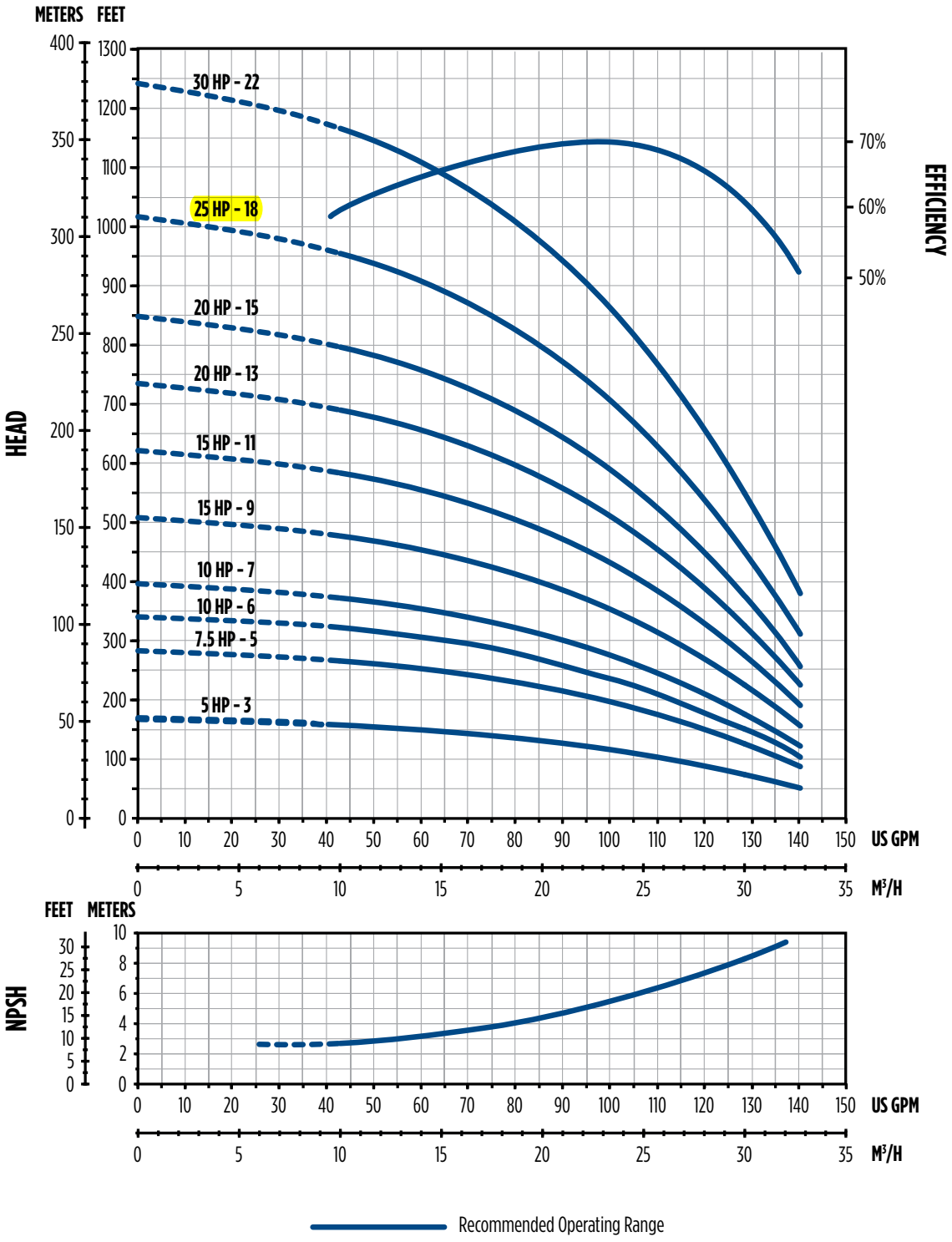

SUBMERSIBLE PUMPS

6" STAINLESS STEEL SR SERIES

DIMENSIONS — 70 GPM

HP	Stages	D [in]	Motor Size [in]	Diameter w/Cable Guard [in]	L [in]	Weight [lbs]
5	5	3 NPT	6	5.63	15.00	23.4
7.5	8				18.54	30.9
10	11				22.09	35.3
15	13				24.45	38.6
15	15				26.73	42.1
15	17				29.17	45.2
20	19				31.54	48.5
20	22				35.08	52.9
25	24				37.44	56.2
25	28				42.17	64.4
30	32				46.79	70.8
40	37			* 5.71	52.70	78.5
40	42				58.60	86.2

NOTE: D = Discharge, L = Pump Length

** Denotes larger diameter with cable guard due to high pressure model.*

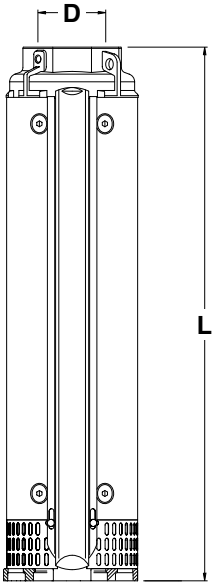

DIMENSIONS — 100 GPM

HP	Stages	D [in]	Motor Size [in]	Diameter w/Cable Guard [in]	L [in]	Weight [lbs]
5	3	3 NPT	6	5.63	16.79	22.1
7.5	5				19.74	26.5
10	6				21.22	27.6
10	7				22.69	29.8
15	9				25.64	33.1
15	11				28.60	37.5
20	13				31.55	40.8
20	15				34.50	44.1
25	18				38.92	49.6
30	22				44.82	57.3
40	26				50.72	63.9
40	28				53.67	68.3
50	32			* 5.71	59.58	75.0
50	36				65.48	81.6
60	39				69.90	88.2
60	42				74.33	94.8

NOTE: D = Discharge, L = Pump Length

** Denotes larger diameter with cable guard due to high pressure model.*

DIMENSIONS — 150 GPM

HP	Stages	D [in]	Motor Size [in]	Diameter w/Cable Guard [in]	L [in]	Weight [lbs]
7.5	3	3 NPT	6	5.63	17.01	25.4
10	4				18.84	27.6
15	5				20.67	29.8
15	7				24.33	34.2
20	9				27.99	38.6
25	11				31.65	43.0
30	14				37.15	49.6
40	19				46.30	59.5
50	23				53.62	68.3
60	26				59.09	75.0
60	28				62.76	79.4

NOTE: D = Discharge, L = Pump Length

SUBMERSIBLE PUMPS

6" STAINLESS STEEL SR SERIES

ORDER INFORMATION — 100 GPM

GPM	Stages	HP	Motor Size [in]	304 SS		316 SS	
				Order No.	Description	Order No.	Description
100	3	5	6	97160100003	100SR5F66-0363	97161100003	100SR5S66-0363
	5	7.5		97160100005	100SR7F66-0563	97161100005	100SR7S66-0563
	6	10		97160100006	100SR10F66-0663	97161100006	100SR10S66-0663
	7	10		97160100007	100SR10F66-0763	97161100007	100SR10S66-0763
	9	15		97160100009	100SR15F66-0963	97161100009	100SR15S66-0963
	11	15		97160100011	100SR15F66-1163	97161100011	100SR15S66-1163
	13	20		97160100013	100SR20F66-1363	97161100013	100SR20S66-1363
	15	20		97160100015	100SR20F66-1563	97161100015	100SR20S66-1563
	18	25		97160100018	100SR25F66-1863	97161100018	100SR25S66-1863
	22	30		97160100022	100SR30F66-2263	97161100022	100SR30S66-2263
	26	40		97160100026	100SR40F66-2663	97161100026	100SR40S66-2663
	28	40		97160100028	100SR40F66-2863	97161100028	100SR40S66-2863
	32	50		97160100032	100SR50F66-3263	97161100032	100SR50S66-3263
	36	50		97160100036	100SR50F66-3663	97161100036	100SR50S66-3663
	39	60		97160100039	100SR60F66-3963	97161100039	100SR60S66-3963
	42	60		97160100042	100SR60F66-4263	97161100042	100SR60S66-4263

NOTE: 4" Motor Adapter Kit (Order No. 305473001) available for 10 hp models and below.

ORDER INFORMATION — 150 GPM

GPM	Stages	HP	Motor Size [in]	304 SS		316 SS	
				Order No.	Description	Order No.	Description
150	3	7.5	6	97160150003	150SR7F66-0363	97161150003	150SR7S66-0363
	4	10		97160150004	150SR10F66-0463	97161150004	150SR10S66-0463
	5	15		97160150005	150SR15F66-0563	97161150005	150SR15S66-0563
	7	15		97160150007	150SR15F66-0763	97161150007	150SR15S66-0763
	9	20		97160150009	150SR20F66-0963	97161150009	150SR20S66-0963
	11	25		97160150011	150SR25F66-1163	97161150011	150SR25S66-1163
	14	30		97160150014	150SR30F66-1463	97161150014	150SR30S66-1463
	19	40		97160150019	150SR40F66-1963	97161150019	150SR40S66-1963
	23	50		97160150023	150SR50F66-2363	97161150023	150SR50S66-2363
	26	60		97160150026	150SR60F66-2663	97161150026	150SR60S66-2663
	28	60		97160150028	150SR60F66-2863	97161150028	150SR60S66-2863

NOTE: 4" Motor Adapter Kit (Order No. 305473001) available for 10 hp models and below.

SUBMERSIBLE PUMPS

6" STAINLESS STEEL SR SERIES

MATERIALS

Parts Description	Type	304 SS		316 SS	
		AISI	DIN / EN	AISI	DIN / EN
Discharge Head	Stainless steel	304	1.430	316	1.440
Valve	Stainless steel	316	1.440	316	1.440
Sealing O-ring	Nitrile rubber (NBR)	-	-	-	-
Outer Case Locking Nuts	Stainless steel	316	1.440	316	1.440
Outer Case	Stainless steel	304	1.430	316	1.440
Suction Strainer	Stainless steel	316	1.440	316	1.440
Cable Guard	Stainless steel	316	1.440	316	1.440
Initial Spacer	Stainless steel	304	1.430	316	1.440
Flange and Screws	Stainless steel	304	1.430	316	1.440
Motor Adapter	Stainless steel	304	1.430	316	1.440
Pump Shaft	Stainless steel	431	1.406	316/329	1.4401 / 1.4460
Coupling	Stainless steel	431 / 329	1.4057 / 1.4460	316/329	1.4401 / 1.4460
Upper / Lower Upthrust Washer	Stainless steel	316	1.440	316	1.440
Upper Journal Sleeve	Stainless steel w/ tungsten carbide (WIDIA)	316	1.440	316	1.440
Screw and Washer	Stainless steel	316	1.440	316	1.440
Upthrust Ring	PTFE	-	-	-	-
Lower Spacer	Stainless steel	316	1.440	316	1.440
Diffuser	Stainless steel	304	1.430	316	1.440
Secondary Bearing Bushing	Nitrile rubber (NBR)	-	-	-	-
Floating Neck Ring	PTFE	-	-	-	-
Flange Clamping Neck Ring	Stainless steel	304	1.430	316	1.440
Bearing Bushing	Nitrile rubber (NBR)	-	-	-	-
Last / Intermediate Diffuser	Stainless steel	316	1.440	316	1.440
First Stage	Stainless steel	316	1.440	316	1.440
Impeller / Wear Ring	Stainless steel	304	1.430	316	1.440
Split Cone / Secondary Journal Sleeve	Stainless steel	316	1.440	316	1.440
Split Cone Nut / Intermediate Cone Nut	Stainless steel	316	1.440	316	1.440
Upthrust Split Cone Nut	Stainless steel	316	1.440	316	1.440

DEPARTMENT OF THE ARMY
ALBUQUERQUE DISTRICT, CORPS OF ENGINEERS
ALBUQERQUE DISTRICT OFFICE
4101 JEFFERSON PLAZA NE
ALBUQUERQUE, NM 87109

SUBMITTAL REVIEW VERIFICATION SHEET

PROJECT TITLE: Kirtland BFF Mid-Plume Pump and Treat System Expansion
CONTRACT NUMBER: W912DR-12-D-0006 DM01
DATE RECEIVED: 12-05-2017
DATE REVIEWED: 12-07-2017

DESCRIPTION OF ITEMS REVIEWED:

1. Butterfly Valve

NO EXCEPTIONS TAKEN.	**X**
EXCEPTIONS AS NOTED ON DRAWINGS AND/OR ATTACHED SHEETS(S). RESUBMISSION NOT REQUIRED.	
EXCEPTIONS AS NOTED ON DRAWINGS AND/OR ATTACHED SHEETS(S). RESUBMISSION REQUIRED.	
RECEIPT ACKKNOWLEDGED.	

Notes:

NOTE: ITEMS REVIEWED AS TO GENERAL LAYOUT ONLY. DIMENSIONS AND QUANTITIES NOT CHECKED. REVIEW DOES NOT RELIEVE CONTRACTOR OF RESPONSIBILITIES FOR ANY ERRORS WHICH MAY EXIST AS CONTRACTOR SHALL BE RESPONSIBLE FOR DIMENSIONS AND DESIGN OF ADEQUATE CORRECTIONS, DETAILS AND SATISFACTORY CONSTRUCTION OF WORK.

SIGNATURE SANCHEZ.AMY.ELIZABETH.1454434338 Digitally signed by SANCHEZ.AMY.ELIZABETH.1454434338 DN: c=US, o=U.S. Government, ou=DoD, ou=PKI, ou=USA, cn=SANCHEZ.AMY.ELIZABETH.1454434338 Date: 2017.12.07 09:11:09 -07'00' **DATE** 12/7/2017

EA Engineering, Science, and Technology, Inc., PBC

Submittal Review Sheet 8

Project Name: **Kirtland BFF Mid-Plume Pump and Treat System Expansion**				Date Received: **12/5/2017**	
Project Owner: **Kirtland Air Force Base**				Checked By: **Tyler Curley**	
Contractor: **Techsas Inc.**	Engineer: **EA Engineering, Science and Technology, Inc., PBC.**			Log Page: **NA**	
Address: **4819 West Bayshore Drive** **Bacliff, TX 77518**	Address: **320 Gold Ave. SW, Suite 1300** **Albuquerque, NM 87102**			EA No.: 62599DM01	
				Spec. Section: **00 00 00**	
				Drawing/Detail No.:	
ATTN: Ed Butler	ATTN: **Devon Jercinovic**			1st Sub	Re-Sub
Date Transmitted: **12/5/2017**	Prev. Transmittal Date: **10/13/17**				

Item No.	No. Copies	Description	Manufacturer	Mfg/Vendor Dwg or Detail	Action Taken*
11	1	Butterfly Valve	Various	Various	**A**

The Action Designated Above is in Accordance with the Following Legend:

A – Furnish as Submitted
B – Furnish as Noted
C – Revise and Re-submit
1. Not enough information for review.
2. No reproducible submitted.
3. Copies illegible.
4. Not enough copies submitted.
5. Wrong sequence number.
6. Wrong resubmittal number.
7. Wrong Spec. Section.
8. Wrong form used.
9. See Comments.

D – Rejected
E – Engineer's Review not Required
1. Submittal not required.
2. Supplemental Information. Submittal retained for Information purposes only.
3. Information reviewed and approved on prior submittal.
4. See Comments.

Review is for general compliance with Contract Documents. No responsibility is assumed for correctness of dimensions or detail. Contractor is required to specify deviations from contract requirements. Lack of exceptions noted by Engineer does not waive Contractor's obligation to comply with Drawings and Specifications.

Comments:
ARV is consistent with existing ARVs. The butterfly valves are rated at an appropriate pressure (200 psi) and will utilize BUNA-N (nitrile) hydrocarbon compatible materials. The double strap service saddles are consistent with existing saddles.

By: _____ Date: 12/5/17

Distribution: [1] Contractor [1] Engineer [1] Owner

200 PSI Butterfly Valves

Ductile Iron Body • Extended Neck • Geometric Drive
Molded-in Seat Liner • Lug and Wafer Style

Sizes 2" through 12"

Install between Std. ASME Class 125/150 Flanges
Lug Style 200 PSI bi-directional dead end service rating without a downstream flange required.

DESIGNED TO MEET MSS SP-67 STANDARD
U.S. COAST GUARD "CATEGORY A"

WD 2100
Wafer Style
Buna-N Liner
and Aluminum
Bronze Disc

LD 2100
Lug Style
Buna-N Liner
and Aluminum
Bronze Disc

MATERIAL LIST

	PART	SPECIFICATION
1.	Stem	Stainless Steel ASTM A582 Type 416
2.	Collar Bushing	Brass ASTM B16
3.	Stem Seal	Buna-N Rubber Nitrile
4.	Body Seal	Buna-N Rubber Nitrile
5.	Nameplate	Aluminum
6.	Upper Bushing	Copper CDA 122
7.	Liner	Buna-N Rubber Nitrile
8.	Disc	Alum. Brz. ASTM B148 Alloy 954/955
9.	Lower Bushing	Copper CDA 122
10.	Body Wafer	Ductile Iron ASTM A536
11.	Body Lug	Ductile Iron ASTM A536

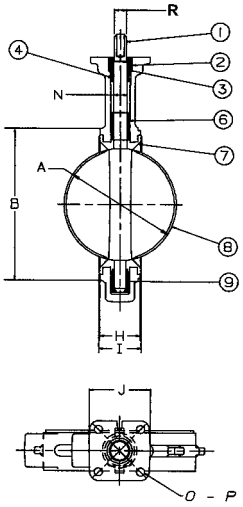

DIMENSIONS — WEIGHTS

Size In.	Size mm.	A	B	C	D	E	F	G Flat	Metal H	Rubber I	J Square	N Dia.
2	50	2.53	4.00	1.25	5.38	2.88	.38	.312	1.688	1.812	3.25	.500
2½	65	2.90	4.69	1.25	5.88	3.27	.38	.370	1.812	1.938	3.25	.562
3	80	3.15	5.12	1.25	6.12	3.40	.38	.370	1.812	1.938	3.25	.562
4	100	4.09	6.12	1.25	6.88	4.00	.38	.403	2.062	2.188	3.25	.625
5	125	5.13	7.25	1.25	7.38	4.75	.38	.496	2.188	2.312	3.25	.750
6	150	6.13	8.25	1.25	8.00	5.29	.38	.496	2.188	2.312	3.25	.750
8	200	8.13	10.41	1.25	9.25	6.50	.50	.560	2.375	2.500	3.25	.875
10	250	10.13	12.52	1.25	10.50	8.00	.50	.686	2.688	2.812	4.75	1.125
12	300	12.13	15.00	1.25	12.00	9.25	.50	.748	3.000	3.125	4.75	1.250

Size In.	Size mm.	O B.C.	P Dia.	R Dia.	Capscrew/Stud Data K No.	L Dia.	Wafer Length	Lug Length	M B.C.	Lug Weight Lbs.	Lug Weight Kg.	Wafer Weight Lbs.	Wafer Weight Kg.
2	50	3.25	.437	.437	4	⅝-11unc	Refer to butterfly valve technical information for bolt lengths		4¾	7	3.2	5.5	2.5
2½	65	3.25	.437	.500	4	⅝-11unc			5½	9	4.1	7.5	3.4
3	80	3.25	.437	.500	4	⅝-11unc			6	9.5	4.3	8	3.6
4	100	3.25	.437	.562	8	⅝-11unc			7½	15	6.8	11	5.0
5	125	3.25	.437	.656	8	¾-10unc			8½	21	9.5	15	6.8
6	150	3.25	.437	.656	8	¾-10unc			9½	24	10.9	18	8.2
8	200	3.25	.437	.781	8	¾-10unc			11¾	34	15.4	28	12.7
10	250	5.00	.562	1.000	12	⅞-9unc			14¼	62	28.1	45.5	20.7
12	300	5.00	.562	1.062	12	⅞-9unc			17	90	40.9	70	31.8

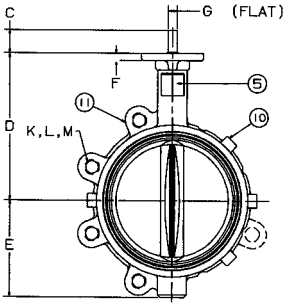

For actuated service where a lower torque is required use NIBCO Fig. No. WDLXXX-0 or LDLXXX-0 series, sizes 2" thru 12" only. Maximum pressure rating of 100 PSI for wet application and 50 PSI for dry application

NOT RECOMMENDED
FOR STEAM SERVICE

NIBCO INC. WORLD HEADQUARTERS • 1516 MIDDLEBURY ST. • ELKHART, IN 46516-4740 • USA • PH: 1.800.234.0227
TECH SERVICES PH: 1.888.446.4226 • FAX: 1.888.234.0557 • INTERNATIONAL OFFICE PH: +1.574.295.3327 • FAX: +1.574.295.3455
www.nibco.com

DEPARTMENT OF THE ARMY
ALBUQUERQUE DISTRICT, CORPS OF ENGINEERS
ALBUQERQUE DISTRICT OFFICE
4101 JEFFERSON PLAZA NE
ALBUQUERQUE, NM 87109

SUBMITTAL REVIEW VERIFICATION SHEET

PROJECT TITLE: Kirtland BFF Mid-Plume Pump and Treat System Expansion
CONTRACT NUMBER: W912DR-12-D-0006 DM01
DATE RECEIVED: 10-13-2017
DATE REVIEWED: 10-17-2017

DESCRIPTION OF ITEMS REVIEWED:

1. Recovery Well Vault Components

NO EXCEPTIONS TAKEN.	**X**
EXCEPTIONS AS NOTED ON DRAWINGS AND/OR ATTACHED SHEETS(S). RESUBMISSION NOT REQUIRED.	
EXCEPTIONS AS NOTED ON DRAWINGS AND/OR ATTACHED SHEETS(S). RESUBMISSION REQUIRED.	
RECEIPT ACKKNOWLEDGED.	

Notes:

NOTE: ITEMS REVIEWED AS TO GENERAL LAYOUT ONLY. DIMENSIONS AND QUANTITIES NOT CHECKED. REVIEW DOES NOT RELIEVE CONTRACTOR OF RESPONSIBILITIES FOR ANY ERRORS WHICH MAY EXIST AS CONTRACTOR SHALL BE RESPONSIBLE FOR DIMENSIONS AND DESIGN OF ADEQUATE CORRECTIONS, DETAILS AND SATISFACTORY CONSTRUCTION OF WORK.

SIGNATURE SANCHEZ.AMY.ELIZABETH.1454434338 Digitally signed by SANCHEZ.AMY.ELIZABETH.1454434338 DN: c=US, o=U.S. Government, ou=DoD, ou=PKI, ou=USA, cn=SANCHEZ.AMY.ELIZABETH.1454434338 Date: 2017.10.17 14:26:22 -06'00' **DATE** 10/17/2017

EA Engineering, Science, and Technology, Inc., PBC

Submittal Review Sheet 8

Project Name: **Kirtland BFF Mid-Plume Pump and Treat System Expansion**			Date Received: **10/12/2017**
Project Owner: **Kirtland Air Force Base**			Checked By: **Tyler Curley**
Contractor: **Techsas Inc.**	Engineer: **EA Engineering, Science and Technology, Inc., PBC.**		Log Page: **NA**
Address: **4819 West Bayshore Drive** **Bacliff, TX 77518**	Address: **320 Gold Ave. SW, Suite 1300** **Albuquerque, NM 87102**		EA No.: 62599DM01
			Spec. Section: **00 00 00**
			Drawing/Detail No.:
ATTN: Ed Butler	ATTN: **Devon Jercinovic**	1st Sub	Re-Sub
Date Transmitted: **10/13/2017**	Prev. Transmittal Date:		

Item No.	No. Copies	Description	Manufacturer	Mfg/Vendor Dwg or Detail	Action Taken*
11	1	Recovery Well Components	Various	Various	**A**

The Action Designated Above is in Accordance with the Following Legend:

A – Furnish as Submitted
B – Furnish as Noted
C – Revise and Re-submit
1. Not enough information for review.
2. No reproducible submitted.
3. Copies illegible.
4. Not enough copies submitted.
5. Wrong sequence number.
6. Wrong resubmittal number.
7. Wrong Spec. Section.
8. Wrong form used.
9. See Comments.

D – Rejected
E – Engineer's Review not Required
1. Submittal not required.
2. Supplemental Information. Submittal retained for Information purposes only.
3. Information reviewed and approved on prior submittal.
4. See Comments.

Review is for general compliance with Contract Documents. No responsibility is assumed for correctness of dimensions or detail. Contractor is required to specify deviations from contract requirements. Lack of exceptions noted by Engineer does not waive Contractor's obligation to comply with Drawings and Specifications.

Comments:
ARV is consistent with existing ARVs. The butterfly valves are rated at an appropriate pressure (200 psi) and will utilize BUNA-N (nitrile) hydrocarbon compatible materials. The double strap service saddles are consistent with existing saddles.

By: _____ Date: 10/13/17

Distribution: [1] Contractor [1] Engineer [1] Owner

TRANSMITTAL DOCUMENT

Date:	**10/11/2017**	**From:**	**Ed Butler**
To:	**EA Engineering, Science, and Technology, Inc., 320 Gold Ave. SW, Suite 1300 Albuquerque, NM 87102 Devon Jercinovic**	**Job Name:**	**Kirtland AFB, NM Bulk Fuels Facility**
		Reference:	
		Transmittal Method:	**E-mail**
		Sent By:	**Ed Butler**

Submittal	Dwg. Number	Item Description
11	C-302	Recovery Well Vault Components

Ed Butler
TECHSAS, Inc.
4819 West Bayshore Drive
Bacliff, TX 77518

"I hereby certify that the (equipment) (material) (article) shown and marked in this submittal is that proposed to be incorporated with the Contract, is in compliance with the contract drawings and specification, can be installed in the allocated spaces, and is submitted for Contractor approval.

Certified by _____.
(Signature when applicable) Date: _____.

VAL-MATIC®

Protection
airValve
Efficiency

Bulletin 1500

AIR VALVES

PROVIDING SYSTEM EFFICIENCY AND PROTECTION

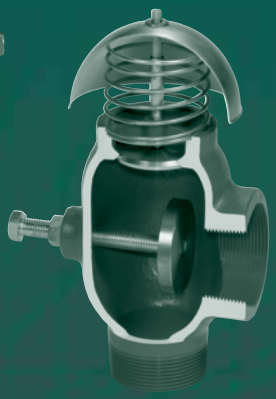

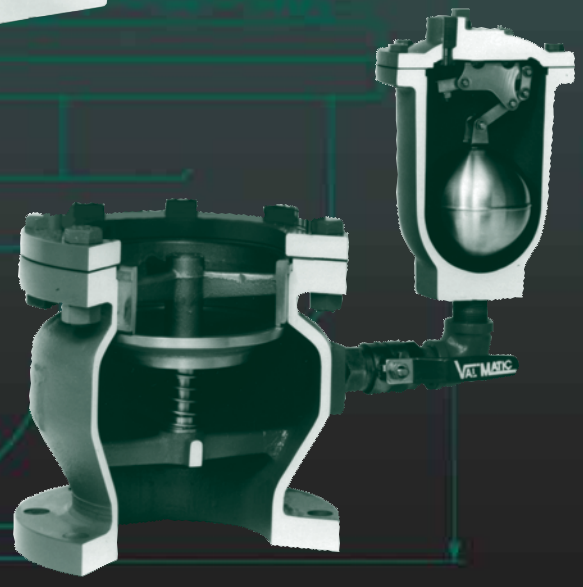

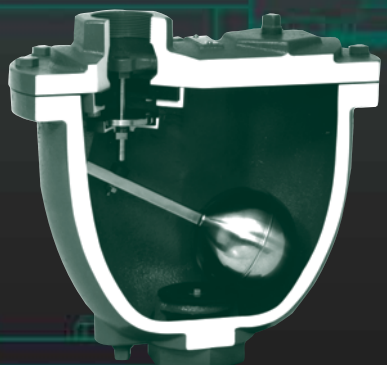

CLASSIFIED UL® WATER QUALITY

NSF/ANSI 61 Certified

Combination Air Valves
Installation Dimensions

WATER COMBINATION AIR VALVES (SINGLE BODY)						
Inlet Size	Outlet Size	Model Number	CWP PSI	Orifice Size	Dimensions	
					A	B
1" NPT	1" NPT	201C.2	300	5/64"	11 3/8"	10 1/2"
2" NPT	2" NPT	202C.2	300	3/32"	14"	13"
3" NPT	3" NPT	203C.2	300	3/32"	16"	15"
3" 125lb Flg	3" NPT	203C.14	150	3/32"	16"	16 3/4"
3" 250lb Flg	3" NPT	203C.15	300	3/32"	16"	17 1/4"
4" NPT	4" NPT	204C.2	300	3/32"	18 1/2"	17"
4" 125lb Flg	4" NPT	204C.14	150	3/32"	18 1/2"	19 3/4"
4" 250lb Flg	4" NPT	204C.15	300	3/32"	18 1/2"	20 1/4"
6" 125lb Flg	6" NPT	206C	150	3/8"	21"	20 1/4"
6" 250lb Flg	6" NPT	256C	300	7/32"	21"	20 1/4"
8" 125lb Flg	8" NPT	208C	150	3/8"	25"	23 1/2"
8" 250lb Flg	8" NPT	258C	300	7/32"	25"	23 1/2"

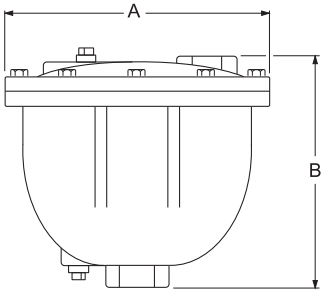

201C.2 - 204C.15
Single Body Combination
Air Valves

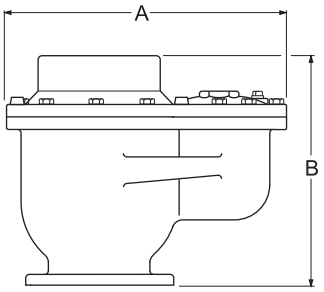

206C - 258C
Single Body
Combination Air Valves

WASTEWATER COMBINATION AIR VALVES (SINGLE BODY)						
Inlet Size	Outlet Size	Model Number	CWP PSI	Orifice Size	Dimensions	
					A	B
2" NPT	1" NPT	801A	150	1/8"	7"	14 15/16"
2" NPT	2" NPT	802A	150	9/64"	9 1/2"	18 1/16"
3" NPT	3" NPT	803A	150	11/64"	11"	23 1/2"
4" NPT	4" NPT	804	150	11/64"	11"	23 1/2"

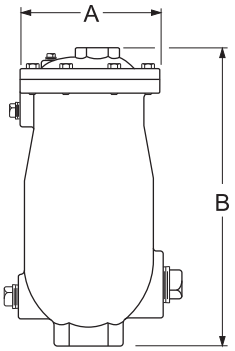

801A - 804
Wastewater
Single Body Combination
Air Valves

Surge-Suppression Air Valves and Isolation Valves in a pump discharge application.

200 PSI Flanged End Butterfly Valves

Polyamide Coated Cast Iron Body • Extended Neck • Cold Form Stem Drive • Elastomer Encapsulated Disc • Flanged Ends • Max. Temp. 200°F with EPDM only • ASME B16.10 Face-to-face dimensions

Patent Pending

Sizes 2" through 12"

DESIGNED TO MEET MSS SP-67 STANDARD

FC-27*5-0

*Optional disc
EPDM (6)
or BUNA (7)

MATERIAL LIST

	PART	SPECIFICATION
1.	Upper Stem	Stainless Steel, ASTM A582 Type 416
2.	Upper Bushing	PTFE over Porous Bronze, Steel Backed
3.	O-Ring	EPDM or BUNA-N
4.	Body	Cast Iron ASTM A126 Class B with Polyamide Coating
5.	Disc	Ductile Iron ASTM A395 with EPDM or BUNA-N Encapsulation
6.	Lower Bushing	PTFE over Porous Bronze, Steel Backed
7.	Lower Stem	Stainless Steel, ASTM A582 Type 416
8.	Dust Plug	PVC
9.	Nameplate	Aluminum

Class 125 flange ends

Polyamide coating has NSF certification

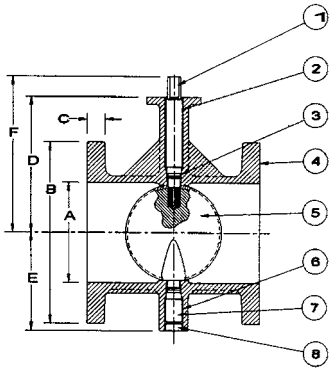

DIMENSIONS — WEIGHTS

Size In.	Size mm.	A	B	C	D	E	F	G	J
2	50	2.11	6.0	0.62	5.69	3.16	6.94	7.00	0.437
2½	6	2.59	7.0	0.69	5.78	3.25	7.03	7.50	0.437
3	80	3.07	7.5	0.75	5.99	3.54	7.24	8.00	0.437
4	100	4.03	9.0	0.94	6.99	4.35	8.24	9.00	0.437
5	125	5.05	10.0	0.94	7.47	4.85	8.72	10.00	0.437
6	150	6.07	11.0	1.00	8.28	5.94	9.53	10.50	0.437
8	200	7.98	13.5	1.12	9.25	6.87	10.50	11.50	0.437
10	250	10.02	16.0	1.19	11.03	9.18	12.28	13.00	0.562
12	300	12.00	19.0	1.25	12.01	10.16	13.26	14.00	0.562

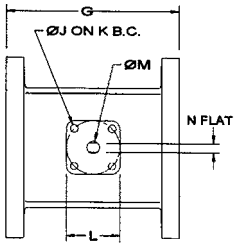

Size In.	Size mm.	K	L	M	N	P	Q	R	Weight Lbs.	Weight Kg.
2	50	3.25	3.25	0.50	0.37	0.75	4.75	4	16.5	7.5
2½	65	3.25	3.25	0.50	0.37	0.75	5.50	4	24	10.9
3	80	3.25	3.25	0.50	0.37	0.75	6.00	4	28	12.7
4	100	3.25	3.25	0.66	0.50	0.75	7.50	8	44	20.0
5	125	3.25	3.25	0.66	0.50	0.88	8.50	8	53	24.1
6	150	3.25	3.25	0.78	0.56	0.88	9.50	8	65	30.0
8	200	3.25	3.25	0.78	0.56	0.88	11.75	8	94	42.7
10	250	5.00	4.75	1.06	0.75	1.00	14.25	12	155	70.4
12	300	5.00	4.75	1.06	0.75	1.00	17.00	12	214	97.6

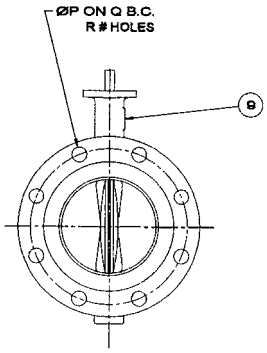

NOT RECOMMENDED
FOR STEAM SERVICE

NIBCO INC. WORLD HEADQUARTERS • 1516 MIDDLEBURY ST. • ELKHART, IN 46516-4740 • USA • PH: 1.800.234.0227
TECH SERVICES PH: 1.888.446.4226 • FAX: 1.888.234.0557 • INTERNATIONAL OFFICE PH: +1.574.295.3327 • FAX: +1.574.295.3455
www.nibco.com

JCM Service Saddles

JCM Service Saddles provide a quick, dependable means of tapping pipe for branch connections of 1/2" through 2-1/2". Use of economical JCM Service Saddles eliminate problems common to direct taps, such as leaking threads or split pipe, and reinforces the critical connection.

JCM Service Saddles are designed for maximum safety and performance. The wrap around design, wide skirt and wide straps support and reinforce the pipe while providing excellent stability to the saddle. The heavy duty design of these saddles provides strength and mass for long term service.

High pressure performance is assured by the broad, pressure activated gasket. Permanently set in a retaining cavity, the contoured gasket produces a positive initial seal which increases with increase in line pressure.

The JCM 402, 404, 406, 408 saddles, with their wide bodies and large sealed outlet areas, provide an excellent means of repairing holes, pin holes and leaking 3/4" and 1" direct taps.

DESIGNED FOR SAFETY AND PERFORMANCE

HEAVY THREADED OUTLET - with IPS or CC threads reinforces the critical connection.

BROAD PRESSURE ACTIVATED GASKET - for low and high pressure performance.

CORROSION RESISTANT COATING - for long-term service.

WIDE STRAPS - increase the load bearing area of the straps.

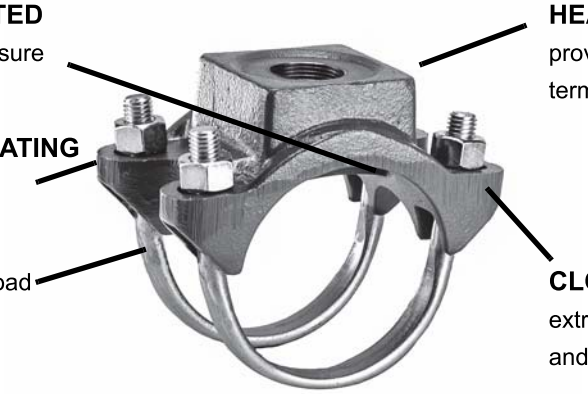

HEAVY DUTY DESIGN - provides strength and mass for long term service.

CLOSED CANTED EARS - for extra protection against electrolysis and maximum strap bearing.

WIDE BODY WRAP AROUND DESIGN - support and reinforce the pipe and provide excellent stability.

MATERIAL SPECIFICATIONS - JCM SERVICE SADDLES

Body:	Ductile Iron ASTM A536
Straps:	**Models 401, 402, 407, 408** - Electro Galvanized Steel **Models 403, 404, 405, 406** - Bands, Bolts, Nuts and Washers are 18-8 Type 304 Stainless Steel.
Gasket:	Nitrile Butadiene Rubber (NBR, Buna-N) per ASTM D2000. Molded virgin rubber with a pressure activated hydromechanical design. Gasket is bonded into a cavity for internal and external retention. Gasket temperature range -40°F to 212°F (-40°C - 100°C) Gasket suitable for water, salt solutions, mild acids, bases, and sewage. Optional EPDM gasket available.
Finish:	**Models 401, 402, 403, 404** - Standard Shop Coat Primer: Heavy coat of corrosion resistant metal primer. **Models 405, 406, 407, 408** - Fusion Plastic Coating: fusion bonded, high density blue plastic coating, 12 mils minimum thickness with a dielectric strength of over 12,000 volts.

JCM Service Saddles - Double Strap
JCM 402 Double Strap Service Saddle
JCM 404 Service Saddle with Double Stainless Steel Straps

The JCM 402 and 404 utilize the heavy duty double strap saddle body with corrosion resistant shop coat primer. The 402 is furnished with two electro galvanized straps sizes 2" -12", on sizes 15.20 and larger, the 402 incorporates two fabricated, wide electro galvanized steel straps. The 404 is furnished with two wide stainless steel straps.

NSF Certified to NSF/ANSI 61

NOM. PIPE SIZE (IN.)	PIPE O.D. RANGE (IN.)	WT. EA. LBS.	CTN. QTY.	JCM 402 SERVICE SADDLE BASE CATALOG NUMBE402-R X ADD TAP CODE	JCM 404 SERVICE SADDLE BASE CATALOG NUMBER X ADD TAP CODE
2	2.35 - 2.63	4	6	*402-0238 X --	*404-0238 X --
2-1/2	2.70 - 3.13	5	6	*402-0288 X --	*404-0288 X --
3	3.25 - 3.50	7	6	**402-0350 X --	**404-0350 X --
3 - 4	3.80 - 4.13	7	6	**402-0413 X --	**404-0413 X --
4	4.25 - 4.50	10	4	402-0450 X --	404-0450 X --
4	4.50 - 4.80	10	4	402-0480 X --	404-0480 X --
4	4.74 - 5.45	10	4	402-0545 X --	404-0545 X --
5	5.50 - 5.56	10	4	402-0556 X --	404-0556 X --
6	6.50 - 6.63	10	4	402-0663 X --	404-0663 X --
6	6.63 - 6.90	10	4	402-0690 X --	404-0690 X --
6	6.84 - 7.60	10	4	402-0745 X --	404-0745 X --
8	8.50 - 8.63	12	4	402-0863 X --	404-0863 X --
8	8.63 - 9.05	13	4	402-0905 X --	404-0905 X --
8	8.99 - 9.79	13	4	402-0963 X --	404-0963 X --
10	10.60 - 10.75	14	3	402-1075 X --	404-1075 X --
10	10.75 - 11.10	14	3	402-1110 X --	404-1110 X --
10	11.10 - 11.40	14	3	402-1140 X --	404-1140 X --
10	11.00 - 12.25	14	3	402-1225 X --	404-1225 X --
12	12.75 - 13.20	16	3	402-1320 X --	404-1320 X --
12	12.75 - 13.50	16	3	402-1350 X --	404-1350 X --
12	13.10 - 14.38	16	2	402-1426 X --	404-1426 X --
12 - 14	14.00 - 15.20	15	1	402-1520 X --	404-1520 X --
14	C-905 15.30	15	1	402-1530 X --	404-1530 X --
14 - 16	15.20 - 16.60	15	1	402-1660 X --	404-1660 X --
16	C-905 17.40	16	1	402-1740 X --	404-1740 X --
16 - 18	17.30 - 18.88	16	1	402-1888 X --	404-1888 X --
18	C-905 19.50	18	1	402-1950 X --	404-1950 X --
18 - 20	19.00 - 20.50	18	1	402-2050 X --	404-2050 X --
18 - 20	20.50 - 21.50	18	1	402-2125 X --	404-2125 X --
20	C-905 21.60	20	1	402-2160 X --	404-2160 X --
20	21.35 - 22.60	20	1	402-2260 X --	404-2260 X --
20	22.50 - 23.70	20	1	402-2370 X --	404-2370 X --
24	23.75 - 25.25	20	1	402-2525 X --	404-2525 X --
24	C-905 25.80	20	1	402-2580 X --	404-2580 X --
24	25.50 - 26.50	20	1	402-2650 X --	404-2650 X --

OUTLET SIZES	TAP CODES IP	TAP CODES CC
1/2"	04	--
3/4"	06	07
1"	08	09
1-1/4"	10	11
1-1/2"	12	13
2"	14	15
2-1/2"	16	--

*Outlets Not available in 1-1/4", 1-1/2", 2" or 2-1/2"
**Outlets Not available in 2" CC or 2-1/2" IP

HOW TO ORDER

1. Determine O.D. of pipe, outlet size and thread type.
2. Select desired saddle type and tap order code.
3. Look under saddle listing to determine order number. Add tap code after base catalog number.
   Example: For 6" C.I. Pipe with O.D. of 6.90 with 1" IP thread, order: 402-0745 x 08IP.
   For stainless steel straps, order: 404-0745 x08IP

DEPARTMENT OF THE ARMY
ALBUQUERQUE DISTRICT, CORPS OF ENGINEERS
ALBUQERQUE DISTRICT OFFICE
4101 JEFFERSON PLAZA NE
ALBUQUERQUE, NM 87109

SUBMITTAL REVIEW VERIFICATION SHEET

PROJECT TITLE: Kirtland BFF Mid-Plume Pump and Treat System Expansion
CONTRACT NUMBER: W912DR-12-D-0006 DM01
DATE RECEIVED: 8-14-2017
DATE REVIEWED: 8-14-2017

DESCRIPTION OF ITEMS REVIEWED:

1. Electrical Metering

NO EXCEPTIONS TAKEN.	**X**
EXCEPTIONS AS NOTED ON DRAWINGS AND/OR ATTACHED SHEETS(S). RESUBMISSION NOT REQUIRED.	
EXCEPTIONS AS NOTED ON DRAWINGS AND/OR ATTACHED SHEETS(S). RESUBMISSION REQUIRED.	
RECEIPT ACKKNOWLEDGED.	

Notes:

NOTE: ITEMS REVIEWED AS TO GENERAL LAYOUT ONLY. DIMENSIONS AND QUANTITIES NOT CHECKED. REVIEW DOES NOT RELIEVE CONTRACTOR OF RESPONSIBILITIES FOR ANY ERRORS WHICH MAY EXIST AS CONTRACTOR SHALL BE RESPONSIBLE FOR DIMENSIONS AND DESIGN OF ADEQUATE CORRECTIONS, DETAILS AND SATISFACTORY CONSTRUCTION OF WORK.

SIGNATURE SANCHEZ.AMY.ELIZABETH.1454434338 Digitally signed by SANCHEZ.AMY.ELIZABETH.1454434338 DN: c=US, o=U.S. Government, ou=DoD, ou=PKI, ou=USA, cn=SANCHEZ.AMY.ELIZABETH.1454434338 Date: 2017.08.14 11:53:25 -06'00' **DATE** 8/14/2017

EA Engineering, Science, and Technology, Inc., PBC

Submittal Review Sheet 1

Project Name: **Kirtland BFF Mid-Plume Pump and Treat System Expansion**			Date Received: **8/7/2017**
Project Owner: **Kirtland Air Force Base**			Checked By: **Tyler Curley**
Contractor: **Wilson Electric**	Engineer: **EA Engineering, Science and Technology, Inc., PBC.**		Log Page: **NA**
Address: **501 General Somervell SE # B** **Albuquerque, NM 87123**	Address: **320 Gold Ave. SW, Suite 1300** **Albuquerque, NM 87102**		EA No.: 62599DM01
			Spec. Section: **NA**
			Drawing/Detail No.: **E-000/E-001**
ATTN: Matthew Walstrom	ATTN: **Devon Jercinovic**	1st Sub	Re-Sub
Date Transmitted: **8/7/2017**	Prev. Transmittal Date:		

Item No.	No. Copies	Description	Manufacturer	Mfg/Vendor Dwg or Detail	Action Taken*
1	1	Electrical Metering	Elester		**A**

The Action Designated Above is in Accordance with the Following Legend:

A – Furnish as Submitted
B – Furnish as Noted
C – Revise and Re-submit
1. Not enough information for review.
2. No reproducible submitted.
3. Copies illegible.
4. Not enough copies submitted.
5. Wrong sequence number.
6. Wrong resubmittal number.
7. Wrong Spec. Section.
8. Wrong form used.
9. See Comments.

D – Rejected
E – Engineer's Review not Required
1. Submittal not required.
2. Supplemental Information. Submittal retained for Information purposes only.
3. Information reviewed and approved on prior submittal.
4. See Comments.

Review is for general compliance with Contract Documents. No responsibility is assumed for correctness of dimensions or detail. Contractor is required to specify deviations from contract requirements. Lack of exceptions noted by Engineer does not waive Contractor's obligation to comply with Drawings and Specifications.

Comments:
Items reviewed and confirmed to meet requirements
(Reviewed Material in Parentheses)
Issues in Bold

Material Conforms to electrical drawings.

By: _____ Date: 8/8//17

Distribution: [1] Contractor [1] Engineer [1] Owner

A3 ALPHA® Meter with EA_NIC

Available in single phase and polyphase meter forms, the A3 ALPHA meter with EA_NIC is an ideal solution for commercial, industrial, and high-end residential AMI metering.

Advanced electricity metering

As a component of the EnergyAxis System, the A3 ALPHA meter with the internal EnergyAxis® network interface card (EA_NIC) brings advanced metering infrastructure capabilities to commercial and industrial metering applications and high end residential applications where real and reactive energy measurements are desired. Customers can obtain interval data, real and reactive energy metering, critical tier, and time-of-use (TOU) data through the EnergyAxis network.

To function as an EnergyAxis System component, the A3 ALPHA meter is supplied with an internal network interface card with two-way 900 MHz communications capability. The EA_NIC mounts under the cover of the A3 ALPHA meter, allowing network deployment to be as simple as installing a meter. No special equipment is necessary because the EA_NIC automatically establishes two qualified communication paths to the gatekeeper. If network conditions change, the EA_NIC automatically and immediately uses the secondary qualified communication pathway to the gatekeeper.

www.byramlabs.com

The data you need

The A3 ALPHA meter is a highly accurate revenue meter with an ANSI C12.20 accuracy Class of 0.2. Current ALPHA meter users will find the basic A3 ALPHA meter types familiar. The A3D delivers basic real energy and demand, and the A3T provides real energy and demand where TOU rates are implemented. The A3R, A3K, and A3Q are used where real and reactive or bidirectional metering are required. Each measured quantity is stored in nonvolatile memory and includes energy, demand, TOU data, and interval recording.

As an element in the EnergyAxis network, the A3 ALPHA meter's EA_NIC reports meter readings, statuses, warning messages, and interval data to the gatekeeper that is then read by the EnergyAxis Management System (EA_MS).

Depending on the meter type and programming, the electricity meter readings reported through the network can include:

- Total and 4-tier energy for two energy quantities, real or reactive

BYRAM LABS
AN ENERGY TECHNOLOGY COMPANY

elster

Built on the strengths of the patented ALPHA meter design, the A3 ALPHA meter with EA_NIC provides highly accurate bidirectional real and reactive AMI metering functionality.

- 4-tier demand for two demand quantities, real or reactive. Each demand reading has an associated date and timestamp to indicate the time of the maximum demand.
- 4-tier coincident demand for two coincident demand quantities, real or reactive
- Per phase voltage
- 2 channels of interval data for any metered quantity in 5-, 15-, 30-, or 60-minute interval lengths

Additionally the A3 ALPHA meter can be configured to report whenever a programmable demand threshold has been exceeded.

Network functionality

The electricity meter data is communicated through the EnergyAxis local area network (EA_LAN) to the local area gatekeeper, where it is stored for retrieval by EA_MS.

In addition, all electricity meter data is available to the utility on request directly from the endpoint, allowing the highest level of customer support and billing accuracy.

All A3 ALPHA meters equipped with an EA_NIC in the EnergyAxis System are uniquely identified by a factory programmed ID. This ID links the meter data to a specific consumer account for accurate billing and enhanced customer support.

Outage and restoration functionality

The A3 ALPHA meter with EA_NIC provides support for utility outage and restoration management. This enables the utility to more quickly identify the scope of outages and to receive positive restoration messages to validate that power has been restored to every endpoint.

Technical specifications

- FHSS RF technology in the unlicensed 902 MHz to 928 MHz band
- Compliant with FCC Rules, Part 15 and Industry Canada RSS-210
- Temperature range of -40 °C to +85 °C
- Humidity range of 0 % to 100 %
- Operating voltage range 96 V to 528 V
- ANSI C12.20 accuracy Class 0.2
- ANSI standards compliance C12.1, C12.10, C12.18, C12.19, C12.20, C12.21

The A3 ALPHA Meter Technical Manual and the A3 ALPHA Meter Data Sheet list additional meter specifications for the A3 ALPHA meter.

The EnergyAxis Network Interface Card is available on all A3 ALPHA meter types and meter forms for both single phase and polyphase services.

About Byram Laboratories

Byram, a global leader in smart metering and smart grid solutions, has delivered smart metering devices worldwide for over 100 years. Byram smart metering system solutions provide energy conservation capabilities via demand response programs, smart grid applications, and operational efficiencies resulting in significant value creation across the customer enterprise.

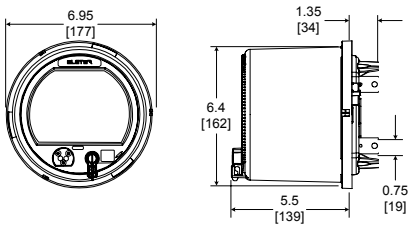

Dimensions in inches [millimeters]. For reference only. Do not use for construction.

Byram Laboratories Inc.
1 Columbia Road
Branchburg, NJ 08876

United States

T +1.800.766.1212 (US toll free)
F +1.908.252.0822

www.byramlabs.com

© 2011 by Elster and Byram Labs. All rights reserved.

Information contained herein is subject to change without notice. Product specifications may change. Contact your Byram representative for the most current product information. Printed in the United States.

ALPHA and EnergyAxis are registered trademarks of Elster. Used by permission.

DS42-1007A

METER SOCKETS
TRANSFORMER RATED • RINGLESS & RING • 5, 6, 8, & 13 TERMINAL

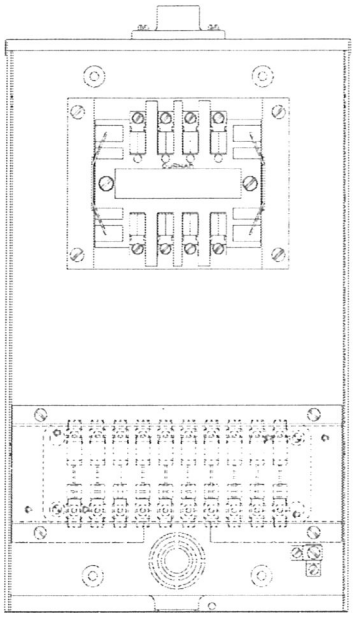

STL8-1K

Note:
Provision for
Test Switch

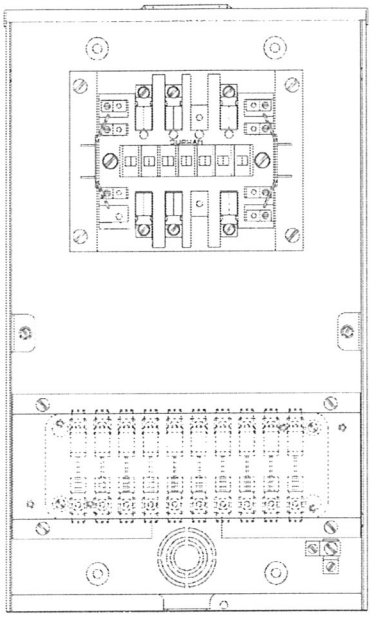

STL13-2B

CATALOG NUMBER		# OF	CABINET DIMENSIONS			KNOCKOUT	1-PIECE	2-PIECE
RINGLESS	RING	JAWS	HEIGHT	WIDTH	DEPTH	CONFIGURATION	COVER	COVER
ST(**)5-1(*)		5	20	12	4 23/64	Fig. 21	X	
ST(**)6-1(*)		6	20	12	4 23/64	Fig. 21	X	
ST(**)8-1(*)		8	20	12	4 23/64	Fig. 21	X	
ST(**)13-1(*)		13	20	12	4 23/64	Fig. 21	X	
ST(**)5-2(*)	RST(**)5-2(*)	5	20	12	4 23/64	Fig. 21		X
ST(**)6-2(*)	RST(**)6-2(*)	6	20	12	4 23/64	Fig. 21		X
ST(**)8-2(*)	RST(**)8-2(*)	8	20	12	4 23/64	Fig. 21		X
ST(**)13-2(*)	RST(**)13-2(*)	13	20	12	4 23/64	Fig. 21		X

(*) Select desired bolt-on hub or top configuration from HUB SELECTION CHART and add the appropriate suffix to the catalog number.

Voltage rating of all units is 600 Volts AC RMS.

Ground wire connector supplied (#14-#2 CU/AL).

A universal test switch mounting plate is supplied without a test switch.

Ring style units are supplied with snap-type sealing rings.

UL (Underwriters Laboratories) label available.

(**) Units are supplied with either a low test switch bridge or standard test switch bridge. Please use the appropriate prefix, L or S, to designate. (Example: for low test switch bridge, ST(L)13-2(*), for standard test switch bridge, ST(S)13-2(*).

Contact factory or your local manufacturer's agent to specify test switches, diagrams, and other special features or prewired options.

HUB SELECTION CHART	
HUB OR TOP CONFIGURATION	CATALOG SUFFIX
SOLID	A
FOR HUB	B
HCP	C
1"	K
1 1/4"	L
1 1/2"	M

Instrument transformers

Type CMV
Indoor or outdoor current transformers

Product features
– 600 volt indoor or outdoor, 10 kV BIL, 25 through 60 hertz
– Primary amperes: CMV 100-4000
– 3.5" x 4.5" (88.9 mm x 114.3 mm) oval window
– Designed for pad-mounted distribution transformer metering

Application
The CMV transformer is designed for pad-mounted distribution
transformer metering. It is available in tapered bottom with removable bus bar adapters, for adaptability to a variety of
mounting arrangements. The CMV transformer can be mounted directly over the LV terminals of pad mounted distribution transformers.

Core and coils
The CMV transformer has an oval shaped ring-type core and
fully distributed winding assembled around a glass-filled polypropylene window liner.

Insulation
Thermoplastic rubber insulating material is permanently molded to the core and coil assembly on both designs, resulting in a compact unit with excellent mechanical, thermal, and dielectric characteristics.

Secondary terminals and cover
The CMV transformers are supplied with large compression-type secondary terminals, a short circuit device, and a clear, rectangular snap-on cover suitable for locking with a meter seal. This clear plastic cover allows a visual check of connections and is keyed to a short circuit device to ensure proper installation. Terminals can also serve as a post-type
connector by looping wire under the screw head.

Primary
The CMV has an oval primary opening suited to fit over the secondary spade in pad-mounted transformers.

Primary
The CMV has an oval primary opening suited to fit over the secondary spade in pad-mounted transformers.

Bus bar adapters
Bus bar adapters for attachment to the terminal spade are shipped with tapered bottom transformers. The CMV transformer may be secured to a wall panel or bracket by inserting bolts through the pair of mounting holes in the transformer body.

Tapered bottom
The tapered bottom CMV adds clearance to locate three
transformers (one unit upside down) over close, triangularly
spaced, pad-mounted transformer terminals.

Test reports
IEEE test reports are stored electronically in various formats and can be e-mailed at time of shipment.

Standards
This unit meets all applicable IEEE and NEMA standards.

Power and productivity
for a better world™

Unit dimensions

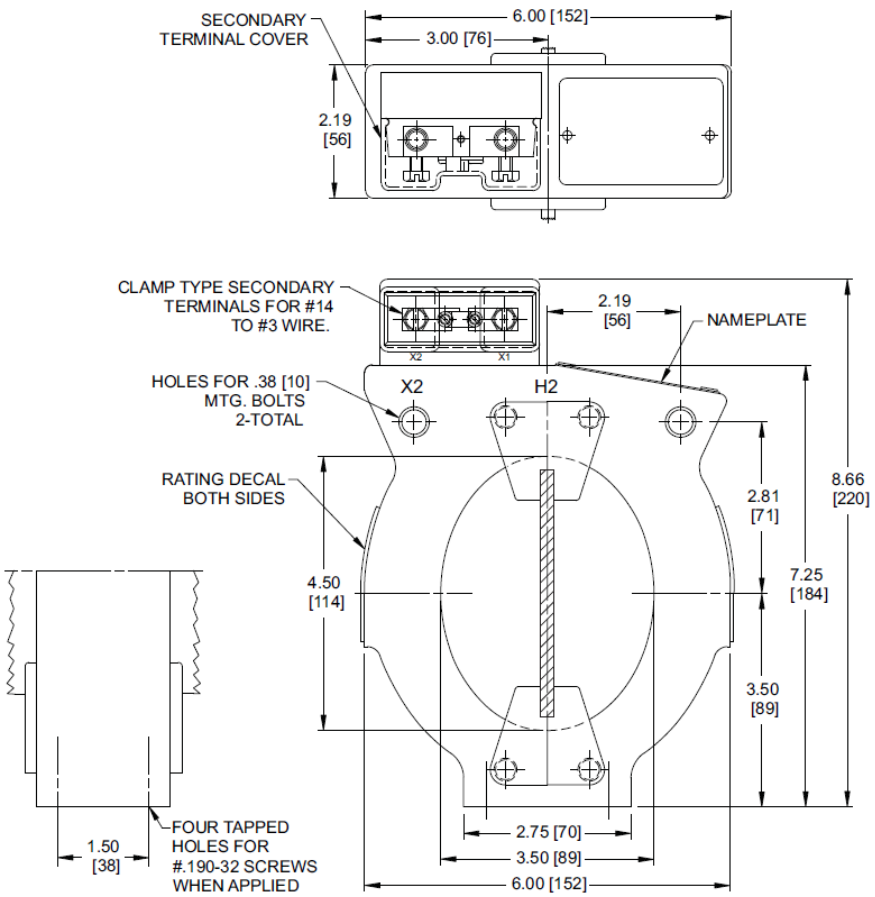

Tapered bottom

Approximate weight is 6 lbs.

Primary Ampere Rating	Rating Factor 30°C	Rating Factor 55°C	IEEE Metering Accu-	IEEE Relaying Accuracy	Part Number
100	4.0	3.0	1.2B-0.1	-	1C3746
200	4.0	3.0	0.3B-0.1	C20	1B6958
300	4.0	3.0	0.3B-0.2	C20	1B6959
400	4.0	3.0	0.3B-0.2	C20	1B6960
500	3.0	2.2	0.3B-0.5	C20	1B6969
600	3.0	2.2	0.3B-0.5	C20	1B6961
800	3.0	2.2	0.3B-0.5	C20	1B6962
1000	2.0	1.5	0.3B-0.5	C30	1B6963
1200	2.0	1.5	0.3B-0.9	C40	1B6964
1500	2.0	1.5	0.3B-0.9	C50	1B6965
2000	1.5	1.2	0.3B-1.8	C50	1B6966
3000	1.3	1.0	0.3B-1.8	C30	1B6967
4000	1.0	0.75	0.3B-1.8	C20	1B6968

tikatmp™
Transformer Metering Package

submittaldocs
Submittal Documentation & Cut-Sheets

Tika's Transformer Metering Package, or TMP™ is the most efficient and economical way to provide metering for single and three phase padmount transformer metering applications.

Our out-of-the-box, bundled package ships equipped with all the necessary components required to provide a professional and accurate installation as quickly and easily as possible.

Documentation for:

TMP HARDWARE KIT

Transformer Metering Package (TMP) Hardware Kit, consisting of:

(Qty. 5) 49 feet (5ft per color: White, black, blue, purple, yellow, orange & red) of #12 Insulated copper wire.
(Qty. 1) Littelfuse ACS 600V, 30A, 3 pole Midget Fuse block (Item# L60030M-3SQDIN).
(Qty. 3) Littelfuse 250 VAC fuses to protect potentials (Item# BLN1).
(Qty. 3) Littelfuse Deadfront Fuse Cover Puller (Item# SPL001)
(Qty. 1) Full-color wiring diagram.
(Qty. 1) Mounting template.
(Qty. 4) Mounting bolts, nuts, washers & zip ties.
(Qty. 1) Closed nipple connector with sealing rings.

tika energy management
tika EnergyManagement

1472 South 600 West
Bountiful, Utah 84010
800-972-8452 toll free
801-294-0066 local
801-294-0077 fax

sales@tikaenergy.com
www.tikaenergy.com

BLN Series Fibre Body Fast-acting Midget / 5AG Size Fuse

Description

Fibertube, 250 V BLN Fuses provide low-cost protection for military applications and control circuits.

Electrical Characteristics for Series

% of Ampere Rating	Ampere Rating	Opening Time
100%	0-30	Until temp stabilizes
135%	0–30	1 hours, Maximum
200%	0-30	2 minutes, Maximum

Agency Approvals

Agency	Agency File Number	Ampere Range
UL	E10480	1.0 - 30A
CSA	LR2 9862	1.0 - 30A
PSE	NBK170305-E10480A-D	1.0 - 30A

Electrical Specifications by Item

Ordering Number	Amp Rating (A)	Max Voltage Rating (V)	Interrupting Rating	Nominal Cold Resistance (Ohms)	Agency Approvals		
					UL	CSA	PSE
BLN 001	1	250	10,000 amperes at 250 VAC.	.395	x	x	x
BLN 01.5	1.5			.222	x	x	x
BLN 002	2			.125	x	x	x
BLN 003	3			.0645	x	x	x
BLN 004	4			.0432	x	x	x
BLN 005	5			.0413	x	x	x
BLN 006.	6			.0284	x	x	x
BLN 008	8			.0166	x	x	x
BLN 010	10			.011	x	x	x
BLN 012	12			.00920	x	x	x
BLN 015	15			.00684	x	x	x
BLN 020	20			.0036	x	x	x
BLN 025	25			.00360	x	x	x
BLN 030	30			.00270	x	x	x

©2009 Littelfuse, Inc.
Specifications are subject to change without notice.
Please refer to www.littelfuse.com/series/BLN.html for current information.

Temperature Rerating Curve

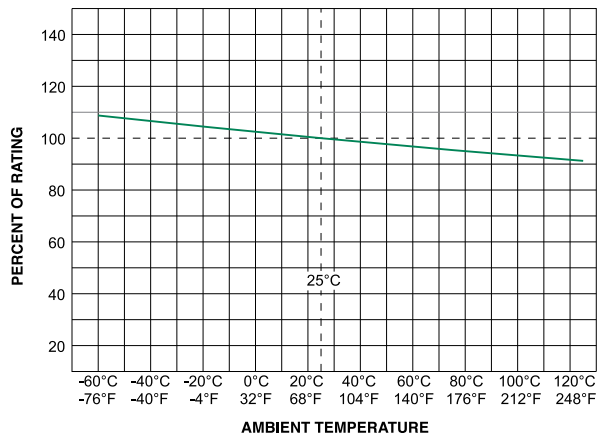

Dimensions

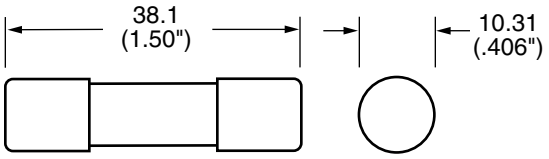

Average Time Current Curves

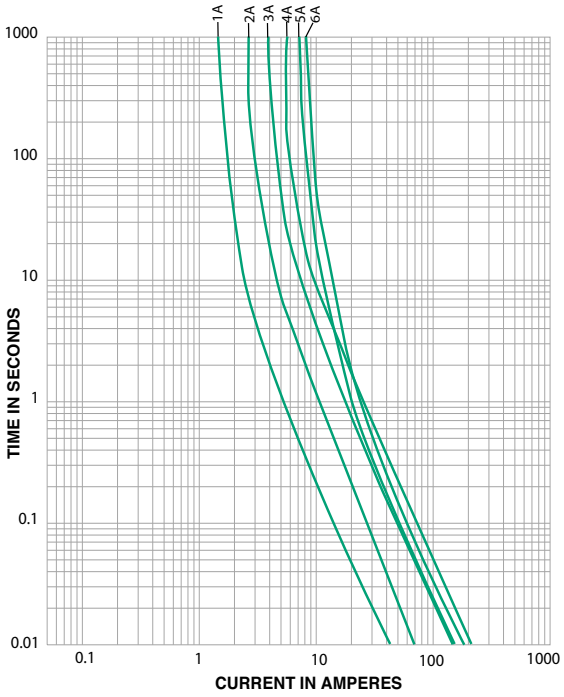

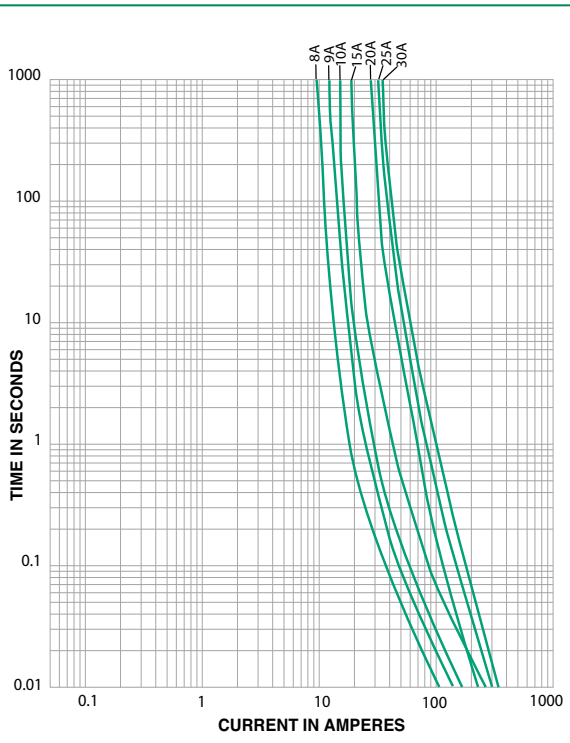

©2009 Littelfuse, Inc.
Specifications are subject to change without notice.
Please refer to www.littelfuse.com/series/BLN.html for current information.

DIN Releasable Class CC, G and Midget Fuse Block

Littelfuse Class CC, G and Midget fuse blocks have integral DIN rail mounting capabilities that allow secure mounting to 35mm "hat" type DIN rails. New releasable mechanism allows installation and removal of block without removing adjacent components on DIN rail. Electrical panel builders and machine builders no longer need to use mounting adapters, saving assembly time and related costs.

Standard Features

- Spring-free mechanism allows for easy installation and removal.
- Integral DIN rail mounting reduces assembly time.
- Quick-Connect terminals accommodate side or top connection.
- Class CC and G versions ensure branch circuit protection compliance.
- Finger safe cover (Class CC and Midget) available – SPL001.

Specifications

Voltage Rating:	Class CC, Midget:	600V AC/DC
	Class G:	480V AC
Ampere Rating:	Class CC, Midget:	30 Amperes Max.
	Class G:	25-30 Amperes
SCCR Rating:	Class CC:	200,000 amperes
	Class G:	100,000 amperes
	Midget:	10,000 amperes
Terminals:	SQ - Screw & Quick Connect (Q.C.) PQ - Pressure Plate & Screw / Q.C. C - Box Lug	
Clip/Terminals:	Tin-plated copper alloy	
Screw Terminals:	Zinc-plated steel	
Box Lug:	Tin-plated copper	
Molded Base:	Black thermoplastic	
Molded Latch:	Red thermoplastic	
Flammability Rating:	UL 94V0	
Approvals:	Class CC, Class G:	UL Listed (File E14721)
	Midget:	UL Recognized (File E14721)
	All:	CSA Certified (File LR7316)

Ordering Information*

Class	Number of Poles	Catalog Number	Connector Type	Maximum Wire Size
Midget	3	L60030M-3CDINR	Box Lug	#6 CU
		L60030M-3PQDINR	Pressure plate with Q.C. Terminal	#10 CU
		L60030M-3SQDINR	Screw/Q.C. Terminal	#10 CU
CC	3	L60030C-3CDINR	Box Lug	#6 CU
		L60030C-3PQDINR	Pressure plate with Q.C. Terminal	#10 CU
		L60030C-3SQDINR	Screw/Q.C. Terminal	#10 CU
G	3	L60030G-3CDINR	Box Lug	#6 CU
		L60030G-3PQDINR	Pressure plate with Q.C. Terminal	#10 CU
		L60030G-3SQDINR	Screw/Q.C. Terminal	#10 CU

1-pole and 2-pole configurations will be available soon. Please consult factory.

© 2008 Littelfuse • POWR-GARD™ Products

Dimensions of Class CC, Class G, and Midget Fuse Block

Dimensions: mm [in]

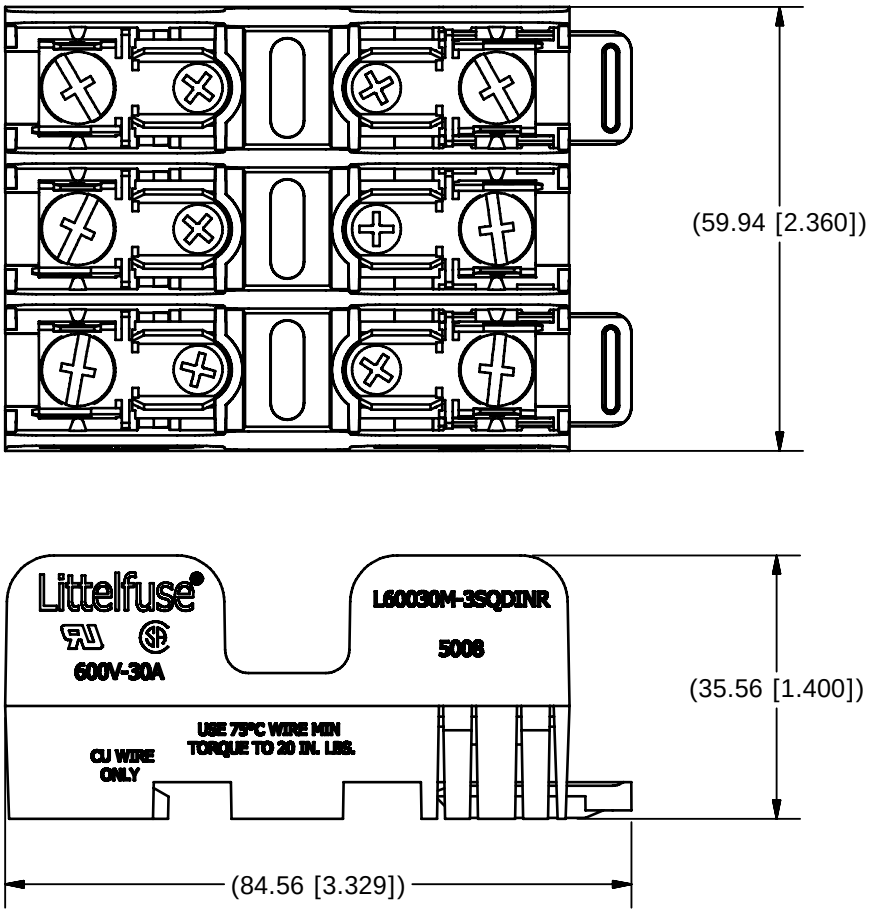

Recommended Fuses

Class CC: CCMR, KLDR, KLKR
Midget: BLF, BLN, BLS, FLA, FLM, FLQ, FLU, KLK, KLKD, KLQ, LA600-2
Class G: SLC 25, SLC 30

© 2008 Littelfuse • POWR-GARD™ Products

CLASS CC AND MIDGET FUSEBLOCK ACCESSORIES

FBDIN1 Rail Adapter

Features/Benefits

- DIN Rail adaptor for 30 A Midget, Class CC and Class G fuseblocks
- Patented design with no tools necessary for installation
- Permits snap-mounting of Class CC, Class G and Midget 30 A fuseblocks to standard and low profile 35 mm symmetrical DIN rails and 32 mm asymmetrical DIN rails
- Easy removal via disconnect tab

Web Resources

For additional technical information visit:
www.littelfuse.com/fbdin1

Dimensions in inches

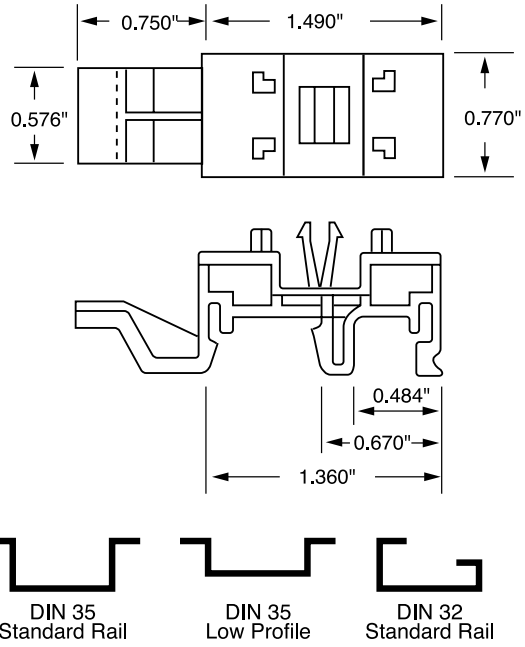

Recommended Fuseblocks

Midget-Style and Class CC
Class G

SPL001 Cover Puller

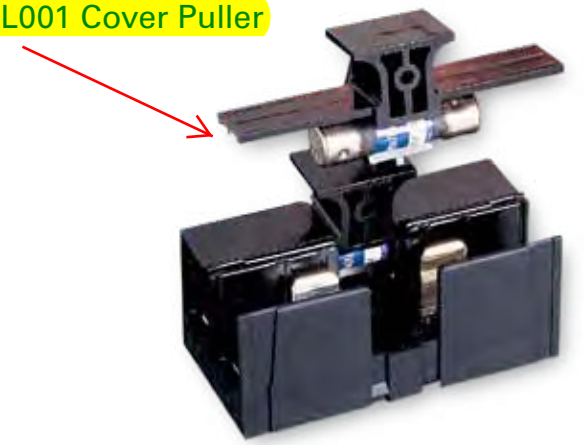

Features/Benefits

- 600 V ⅒-30 A Class CC and Midget fuse cover puller that offers increased protection when removing fuses
- Simple removal without the need for a separate puller
- Meets Dead Front requirements
- Easily gangable with 5⁄16" diameter wire
- For use with all 600 V Class CC and Midget ⅒-30 A fuses
- Label provided for easy fuse identification

Dimensions in inches

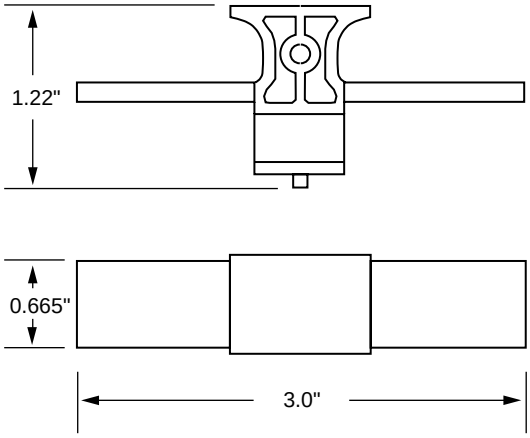

Recommended Fuseblocks

L60030C
L60030M

Web Resources

For additional technical information visit:
www.littelfuse.com/spl001

© JUNE 2011 Littelfuse POWR-GARD Products

Rigid Threaded Nipples

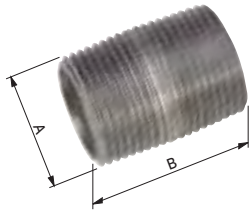

Use:
Threaded nipples are used to extend a length of threaded Rigid or IMC Conduit according to the pipe size and length desired. May also be used to connect two steel outlet boxes or metal enclosures together.

RIGID CONDUIT

Catalog Number	UPC No 0-31857	Trade Size	Nominal Dimensions A	B	C	Pcs/ Unit	Ctn/Case Qty/Qty	Case Wt.
44360	44360-3	1/2"xCL	1/2"	CL-1 1/8"		2	10	2.7
44370	44370-2	1/2"x2"	1/2"	2"		2	20	4.9
54251	54251-1	1/2"x1 1/2"	1/2"	1 1/2"		1	25	2.4
44361	44361-0	3/4"xCL	3/4"	CL-1 3/8"		2	20	3.9
44371	44371-9	3/4"x2"	3/4"	2"		2	20	6.3

Certification / Certificación :
LR57925

Conduit Locknuts

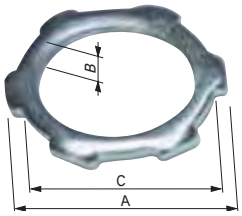

Use:
Conduit locknuts are used for securing Rigid and IMC Conduits and other threaded connectors to a steel outlet box or metal enclosure.

Materials / Materiales :
- Steel / Acero

Finish / Final :
- Zinc Plated / Cinc Plateado

RIGID CONDUIT

Catalog Number	UPC No 0-31857	Trade Size	Nominal Dimensions A	B	C	Pcs/ Unit	Ctn/Case Qty/Qty	Case Wt.
45101	45101-1	1/2"	1.12	0.09	1.00	20	20	4.3
47101	47101-9	1/2"	1.12	0.09	1.00	3	50	1.9
49101	49101-7	1/2"	1.12	0.09	1.00	2	100	2.5
45102	45102-8	3/4"	1.37	0.10	1.25	20	20	6.3
48102	48102-5	3/4"	1.37	0.10	1.25	2	50	1.8
49102	49102-4	3/4"	1.37	0.10	1.25	2	100	3.5

Certification / Certificación :
E155411 LR57925

Standards / Estándares :
UL 514B CSA C22.2 NEMA FB-1 NEC Article 345 & 346

tika ENERGY MANAGEMENT
This Documentation is Provided as a Courtesy for our Customers

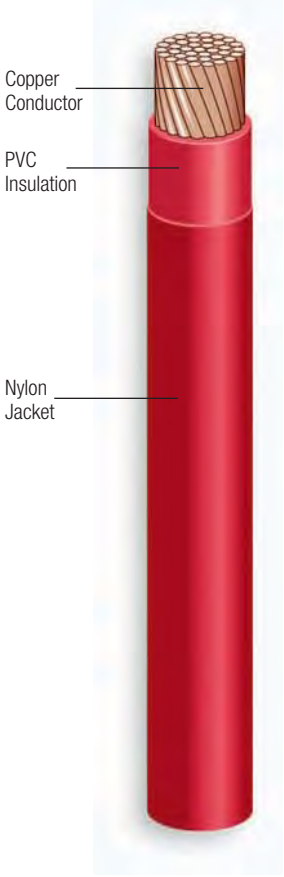

ENGINEERING SPECIFICATIONS:

Listed Solid E-123774
Stranded E-156879

Standards:

Underwriters Laboratories Standards UL-83, UL-1063, UL-758
AWM Spec 1316, 1317, 1318, 1319, 1320, 1321
ASTM Stranding Class B3, B8, B787
Federal Specification A-A-59544
Canadian Standards Association C22.2 No. 75
NEMA WC70/ICEA S-95-658
Institute of Electrical and Electronics Engineers
ARRA 2009; Section 1605 "Buy American" Compliant

CONSTRUCTION:

Conductors:

Solid, uncoated copper conductors per ASTM-B3
Stranded, uncoated copper conductors per ASTM-B3, ASTM-B787 and ASTM-B8

Insulation:

Color-coded Polyvinyl Chloride (PVC), heat and moisture-resistant, flame-retardant compound per UL-1063 and UL-83

Applications:

Type THHN/THWN-2 building wire is intended for general purpose applications as defined by the National Electrical Code (NEC). Type THHN/THWN-2 is permitted for new construction or rewiring for 600-volt applications. Applications requiring Type THHN or THWN-2: the conductor is appropriate for use in wet or dry locations at temperatures not to exceed 90°C or not to exceed 75°C in oil or coolants. Applications requiring Type MTW: the conductor is appropriate for use in dry locations at 90°C, or not to exceed 60°C in wet locations or where exposed to oils or coolants. Applications requiring Type AWM: the conductor is appropriate for use at temperatures to not exceed 105°C in dry locations.

Features:

Slick, Nylon outer jacket for easy pulling. VW-1 rated 14 AWG - 8 AWG. All sizes are rated gasoline and oil-resistant II.

Jacket:

A tough, polyamide, Nylon outer covering per UL-1063 and UL-83.

THHN/MTW/THWN-2/T90 Copper Conductor 600V

Size (AWG or KCMIL)	Number of Strands	Cross Sect. Area (mm²)	PVC Insulation Thickness (Conductor)		Nylon Jacket Thickness		Outside Diameter		Approximate Net Weight		Allowable Ampacity (Amps)*			Standard Packaging (ft)
			(mm)	(in)	(mm)	(in)	(mm)	(in)	(kg/km)	(lbs/1000 ft)	60°C	75°C	90°C	
14	Solid	2.08	0.380	0.015	0.100	0.004	2.57	0.101	22	15	15	15	15	2000 carton (4x500), 2500' reels
12	Solid	3.31	0.380	0.015	0.100	0.004	3.05	0.120	34	23	20	20	20	2000 carton (4x500), 2500' reels
10	Solid	5.26	0.510	0.020	0.100	0.004	3.78	0.149	55	37	30	30	30	1000 carton (2x500), 2500' reels
14	19	2.08	0.380	0.015	0.100	0.004	2.77	0.109	25	16	15	15	15	2000 carton (4x500), 2500' reels
12	19	3.31	0.380	0.015	0.100	0.004	3.23	0.127	36	23	20	20	20	2000 carton (4x500), 2500' reels
10	19	5.26	0.510	0.020	0.100	0.004	4.07	0.160	57	38	30	30	30	1000 carton (2x500), 2500' reels
8	19	8.37	0.760	0.030	0.130	0.005	5.39	0.212	94	62	40	50	55	500' 1000' 2500' 5000' reels

*Allowable ampacity shown above is per the National Electrical Code. The above data is approximate and subject to normal manufacturing tolerances.

PRINT LEGEND:

SOLID CONDUCTOR SIZES 14 AWG THROUGH 10 AWG: ENCORE WIRE CORPORATION (SIZE) AWG TYPE THHN OR THWN-2 GR II VW-1 600 VOLTS (UL) OR AWM OR C-(UL) TYPE T90 NYLON OR TWN 75 FT1. DATE/TIME/OPER/QC

STRANDED CONDUCTOR SIZES 14 AWG THROUGH 8 AWG: ENCORE WIRE CORPORATION (SIZE) AWG TYPE MTW OR THHN OR THWN-2 GR II VW-1 600 VOLTS (UL) OR AWM OR C-(UL) TYPE T90 NYLON OR TWN 75 FT1 DATE/TIME/OPER/QC

5 feet of each of the following colors:
- Black
- Red
- Blue
- White
- Yellow
- Orange
- Purple

DEPARTMENT OF THE ARMY
ALBUQUERQUE DISTRICT, CORPS OF ENGINEERS
ALBUQERQUE DISTRICT OFFICE
4101 JEFFERSON PLAZA NE
ALBUQUERQUE, NM 87109

SUBMITTAL REVIEW VERIFICATION SHEET

PROJECT TITLE: Kirtland BFF Mid-Plume Pump and Treat System Expansion
CONTRACT NUMBER: W912DR-12-D-0006 DM01
DATE RECEIVED: 12-07-2017
DATE REVIEWED: 12-07-2017

DESCRIPTION OF ITEMS REVIEWED:

1. MV Cable

NO EXCEPTIONS TAKEN.	**X**
EXCEPTIONS AS NOTED ON DRAWINGS AND/OR ATTACHED SHEETS(S). RESUBMISSION NOT REQUIRED.	
EXCEPTIONS AS NOTED ON DRAWINGS AND/OR ATTACHED SHEETS(S). RESUBMISSION REQUIRED.	
RECEIPT ACKKNOWLEDGED.	

Notes:

NOTE: ITEMS REVIEWED AS TO GENERAL LAYOUT ONLY. DIMENSIONS AND QUANTITIES NOT CHECKED. REVIEW DOES NOT RELIEVE CONTRACTOR OF RESPONSIBILITIES FOR ANY ERRORS WHICH MAY EXIST AS CONTRACTOR SHALL BE RESPONSIBLE FOR DIMENSIONS AND DESIGN OF ADEQUATE CORRECTIONS, DETAILS AND SATISFACTORY CONSTRUCTION OF WORK.

SIGNATURE SANCHEZ.AMY.ELIZABETH.1454434338 Digitally signed by SANCHEZ.AMY.ELIZABETH.1454434338 DN: c=US, o=U.S. Government, ou=DoD, ou=PKI, ou=USA, cn=SANCHEZ.AMY.ELIZABETH.1454434338 Date: 2017.12.07 13:43:13 -07'00' **DATE** 12/7/2017

EA Engineering, Science, and Technology, Inc., PBC

Submittal Review Sheet 1

Project Name: **Kirtland BFF Mid-Plume Pump and Treat System Expansion**				Date Received: **12/7/2017**
Project Owner: **Kirtland Air Force Base**				Checked By: **Tyler Curley**
Contractor: **Wilson Electric**	Engineer: **EA Engineering, Science and Technology, Inc., PBC.**			Log Page: **NA**
Address: **501 General Somervell SE # B** **Albuquerque, NM 87123**	Address: **320 Gold Ave. SW, Suite 1300** **Albuquerque, NM 87102**			EA No.: **62599DM01**
				Spec. Section: **NA**
				Drawing/Detail No.: **E-000/E-001/E-501**
ATTN: **Matthew Walstrom**	ATTN: **Devon Jercinovic**		1st Sub	Re-Sub
Date Transmitted: **12/7/2017**	Prev. Transmittal Date:			

Item No.	No. Copies	Description	Manufacturer	Mfg/Vendor Dwg or Detail	Action Taken*
1	1	MV Cable	The Okonite Co.		**A**

The Action Designated Above is in Accordance with the Following Legend:

A – Furnish as Submitted
B – Furnish as Noted
C – Revise and Re-submit
1. Not enough information for review.
2. No reproducible submitted.
3. Copies illegible.
4. Not enough copies submitted.
5. Wrong sequence number.
6. Wrong resubmittal number.
7. Wrong Spec. Section.
8. Wrong form used.
9. See Comments.

D – Rejected
E – Engineer's Review not Required
1. Submittal not required.
2. Supplemental Information. Submittal retained for Information purposes only.
3. Information reviewed and approved on prior submittal.
4. See Comments.

Review is for general compliance with Contract Documents. No responsibility is assumed for correctness of dimensions or detail. Contractor is required to specify deviations from contract requirements. Lack of exceptions noted by Engineer does not waive Contractor's obligation to comply with Drawings and Specifications.

Comments:
Items reviewed and confirmed to meet requirements
(Reviewed Material in Parentheses)
Issues in Bold

Material conforms to electrical drawings and are equivalent with the previous submittal. Revision to this submittal was performed as schedule and availability issues would ensue with the previous submitted material.

By: _____ Date: 12/7//17

Distribution: [1] Contractor [1] Engineer [1] Owner

Okoguard® URO-J

15kV Underground Primary Distribution Cable-Jacketed

Red Identification Stripes

Filled Strand Aluminum Conductor/105°C Rating
100% and 133% Insulation Levels

A Conductor - Stranded Aluminum with Filled Strand - Water Swellable Power
B Strand Screen - Extruded Semi-conducting EPR
C Insulation - Okoguard EPR
D Insulation Screen - Extruded Semi-conducting EPR
E Concentric Conductor-Bare Copper Wires
F Encapsulating Jacket-Okolene with Extruded ID Stripes & NESC lightning bolt

Insulation

Okoguard is Okonite's registered trade name for its exclusive ethylene-propylene rubber (EPR) based, thermosetting compound, whose optimum balance of electrical and physical properties is unequaled in other solid dielectrics. Okoguard insulation, with the distinctive red color and a totally integrated EPR system, provides the optimum balance of electrical and physical properties for long, problem free service.

The triple tandem extrusion of the screens with the insulation provides optimum electrical characteristics.

The compressed conductors are filled with a water swellable agent. This construction slows the migration of water through the strands in the event of a mechanical dig-in followed by external exposure to water.

An insulation screen of ethylene-propylene rubber is extruded over the insulation. The copper concentric wires are uniformly spaced around the insulation screen. The overall polyethylene jacket provides protection against mechanical damage and corrosion.

Product identification is provided through the use of three red stripes placed 120° apart in the black jacket, with an NESC lightning bolt.

Applications

Okoguard URO-J cables provide maximum circuit longevity in underground residential distribution systems. They can be buried directly or installed in underground ducts or conduits.

Specifications

Central Conductor: Aluminum per ASTM B-609, Class B stranded per B-231.

Filled Strand: Water swellable powder meets or exceeds ICEA T-31-610 water penetration resistance and ANSI/NEMA class A connectorability requirements.

Conductor Screen: Extruded semiconucting ethylene-propylene rubber meets or exceeds the requirements of ICEA S-94-649 and AEIC CS8.

Insulation: Extruded Okoguard meets or exceeds the requirements of ICEA S-94-649 and AEIC CS8.

Insulation Screen: Extruded semiconducting ethylene-propylene rubber meets or exceeds the requirements of ICEA S-94-649 and AEIC CS8.

Concentric Conductor: Bare copper wires.

Jacket: Black Okolene with red extruded stripes meets or exceeds the requirements of ICEA S-94-649 for polyethylene jackets.

Product Features

- Triple tandem extruded, all EPR system.
- Okoguard cables meet or exceed ICEA standards.
- Meets RUS 1728.204 for cables with filled strand or solid conductor and 133% insulation level.
- 105°C continuous operating temperature.
- 140°C emergency rating.
- 250°C short circuit rating.
- Excellent corona resistance.
- Low dielectric constant and power factor.
- Screens are clean stripping.
- Exceptional resistance to “treeing”.
- Filled strand conductor.
- Moisture resistant.
- Overall jacket provides extended life.
- Excellent resistance to most chemicals.
- Can be listed by UL as Type MV-90 on Special Orders.
- Cable listed by CSA to C68.5 on special orders.
- Design Options:
  Additional conductor sizes
  Copper central conductor
  Copper flat strap concentric neutral
  Product identification via colored jackets.
  Semiconducting jackets.
- Improved Temperature Rating.
Okoguard insulation system has been tested and qualified for operation at 105°C continuous and 140°C emergency operating temperature.
- Minimum installation temperature of -40°C.

Okoguard URO-J

15kV Underground Primary Distribution Cable-Jacketed
Red Identification Stripes
Filled Strand Aluminum Conductor/105°C Rating
100% Insulation Level

Okoguard Insulation: 175 mils 100% Insulation Level

Catalog Number	Conductor Size AWG|kcmil	Nominal Dia. over Insulation (in.)	Nominal Dia. over Insulation Screen (in.)	Copper Neutral, No. x AWG (1)	Nominal O.D. (in.)	Aprox. Net Weight lbs./1000'	Aprox. Ship Weight lbs./1000'	90°C Ampacity Direct Burial (2)	90°C Ampacity Duct (2)	105°C Ampacity Direct Burial (2)	105°C Ampacity Duct (2)
FULL NEUTRAL											
163-23-2060	2(7x)	0.68	0.76	10 x 14	1.00	536	626	170	125	185	135
163-23-2066	1(19x)	0.72	0.80	13 x 14	1.03	608	698	195	145	210	155
**163-23-2072	1/0(19x)	0.76	0.84	16 x 14	1.07	688	778	220	160	235	175
163-23-2075	2/0(19x)	0.81	0.88	13 x 12	1.15	820	910	250	185	270	205
163-23-2078	3/0(19x)	0.86	0.93	16 x 12	1.20	939	1029	285	210	310	230
163-23-2081	4/0(19x)	0.91	0.99	13 x 10	1.30	1138	1238	320	240	350	260
163-23-2084	250(37x)	0.97	1.04	16 x 10	1.36	1302	1418	350	270	380	295
163-23-2090	350(37x)	1.07	1.17	20 x 10	1.49	1615	1793	425	310	460	340
1/3 NEUTRAL											
162-23-2060	2(7x)	0.68	0.76	6 x 14	1.00	489	579	150	120	165	135
162-23-2066	1(19x)	0.72	0.80	6 x 14	1.03	527	617	175	140	185	150
162-23-2072	1/0(19x)	0.76	0.84	6 x 14	1.07	572	662	195	155	215	170
162-23-2075	2/0(19x)	0.81	0.88	7 x 14	1.12	636	726	225	180	240	195
162-23-2078	3/0(19x)	0.86	0.93	9 x 14	1.17	722	889	255	200	275	220
162-23-2081	4/0(19x)	0.91	0.99	11 x 14	1.23	822	922	285	235	310	255
162-23-2084	250(37x)	0.97	1.04	13 x 14	1.28	918	1018	305	250	330	275
162-23-2090	350(37x)	1.07	1.17	18 x 14	1.41	1166	1315	375	310	405	335
162-23-2093	500(37x)	1.20	1.30	16 x 12	1.57	1513	1691	450	370	490	405
162-23-2096	750(61x)	1.39	1.49	15 x 10	1.87	2152	2402	545	460	595	505
162-23-2099	1000(61x)	1.54	1.68	18 x *(A)	2.06	2711	3059	620	520	675	570

* - Special Conductor Size (A) Wire O.D. =0.1052"
** Stocked as unfilled strand as 161-23-2072, see Sec 2, Sheet 35.
(1) Individual wire size and count may vary. The resulting combination meets the 1/3 or full neutral, size requirement.

Okonite's web site, www.okonite.com contains the most up to date information.

Ampacities

(2) Full neutral, single phase ampacities are based on ICEA P-117-734 for 90°C or 105°C conductor temperature, 25°C ambient temperature, 100% load factor, and earth thermal resistivity of RHO 90.
One third neutral ampacities are based on triplexed or triangular configuration for the same conditions stated above.

Okoguard URO-J

15kV Underground Primary Distribution Cable-Jacketed
Red Identification Stripes
Filled Strand Aluminum Conductor/105°C Rating
133% Insulation Level

Okoguard Insulation: 220 mils 133% Insulation Level

Catalog Number	Conductor Size AWG|kcmil	Nominal Dia. over Insulation (in.)	Nominal Dia. over Insulation Screen (in.)	Copper Neutral, No. x AWG (1)	Nominal O.D. (in.)	Aprox. Net Weight lbs./1000'	Aprox. Ship Weight lbs./1000'	90°C Ampacity Direct Burial (2)	90°C Ampacity Duct (2)	105°C Ampacity Direct Burial (2)	105°C Ampacity Duct (2)
FULL NEUTRAL											
▲ 163-23-3060	2(7x)	0.77	0.85	10 x 14	1.08	602	669	170	125	185	135
163-23-3066	1(19x)	0.82	0.90	13 x 14	1.14	694	766	195	145	210	155
▲ 163-23-3072	1/0(19x)	0.84	0.92	16 x 14	1.15	753	820	220	160	235	175
163-23-3075	2/0(19x)	0.91	0.98	13 x 12	1.25	916	996	250	185	270	205
163-23-3078	3/0(19x)	0.96	1.04	16 x 12	1.31	1045	1125	285	210	310	230
163-23-3081	4/0(19x)	1.02	1.09	13 x 10	1.41	1252	1347	320	240	350	260
163-23-3084	250(37x)	1.07	1.17	16 x 10	1.48	1456	1606	350	270	380	295
163-23-3090	350(37x)	1.18	1.28	20 x 10	1.59	1762	1912	425	310	460	340
1/3 NEUTRAL											
162-23-3060	2(7x)	0.78	0.85	6 x 14	1.09	562	627	150	120	165	135
162-23-3066	1(19x)	0.82	0.90	6 x 14	1.14	612	684	175	140	185	150
162-23-3072	1/0(19x)	0.86	0.94	6 x 14	1.18	661	733	195	155	215	170
162-23-3075	2/0(19x)	0.91	0.98	7 x 14	1.22	730	810	225	180	240	195
162-23-3078	3/0(19x)	0.96	1.04	9 x 14	1.27	825	905	255	200	275	220
▲ 162-23-3081	4/0(19x)	0.99	1.06	11 x 14	1.30	891	1005	285	235	310	255
162-23-3084	250(37x)	1.07	1.17	13 x 14	1.41	1069	1164	305	250	330	275
▲ 162-23-3090	350(37x)	1.16	1.26	18 x 14	1.50	1254	1425	375	310	405	335
▲ 162-23-3093	500(37x)	1.29	1.39	16 x 12	1.72	1666	1853	450	370	490	405
▲ 162-23-3096	750(61x)	1.48	1.58	15 x 10	1.95	2244	2468	545	460	595	505
▲ 162-23-3099	1000(61x)	1.63	1.77	18 x *(A)	2.15	2808	3093	620	520	675	570

* - Special Conductor Size (A) Wire O.D. =0.1052"

(1) Individual wire size and count may vary. The resulting combination meets the 1/3 or full neutral, size requirement.

Okonite's web site, www.okonite.com contains the most up to date information.

▲ **Authorized Stock Item** - Available from Customer Service centers.

Ampacities

(2) Full neutral, single phase ampacities are based on ICEA P-117-734 for 90°C or 105°C conductor temperature, 25°C ambient temperature, 100% load factor, and earth thermal resistivity of RHO 90.
One third neutral ampacities are based on triplexed or triangular configuration for the same conditions stated above.

THE OKONITE COMPANY
Ramsey, New Jersey 07446

DEPARTMENT OF THE ARMY
ALBUQUERQUE DISTRICT, CORPS OF ENGINEERS
ALBUQERQUE DISTRICT OFFICE
4101 JEFFERSON PLAZA NE
ALBUQUERQUE, NM 87109

SUBMITTAL REVIEW VERIFICATION SHEET

PROJECT TITLE: Kirtland BFF Mid-Plume Pump and Treat System Expansion
CONTRACT NUMBER: W912DR-12-D-0006 DM01
DATE RECEIVED: 8-14-2017
DATE REVIEWED: 8-14-2017

DESCRIPTION OF ITEMS REVIEWED:

1. MV Terminations

NO EXCEPTIONS TAKEN.	**X**
EXCEPTIONS AS NOTED ON DRAWINGS AND/OR ATTACHED SHEETS(S). RESUBMISSION NOT REQUIRED.	
EXCEPTIONS AS NOTED ON DRAWINGS AND/OR ATTACHED SHEETS(S). RESUBMISSION REQUIRED.	
RECEIPT ACKKNOWLEDGED.	

Notes:

NOTE: ITEMS REVIEWED AS TO GENERAL LAYOUT ONLY. DIMENSIONS AND QUANTITIES NOT CHECKED. REVIEW DOES NOT RELIEVE CONTRACTOR OF RESPONSIBILITIES FOR ANY ERRORS WHICH MAY EXIST AS CONTRACTOR SHALL BE RESPONSIBLE FOR DIMENSIONS AND DESIGN OF ADEQUATE CORRECTIONS, DETAILS AND SATISFACTORY CONSTRUCTION OF WORK.

SIGNATURE SANCHEZ.AMY.ELIZABETH.1454434338 Digitally signed by SANCHEZ.AMY.ELIZABETH.1454434338 DN: c=US, o=U.S. Government, ou=DoD, ou=PKI, ou=USA, cn=SANCHEZ.AMY.ELIZABETH.1454434338 Date: 2017.08.14 11:38:12 -06'00' **DATE** 8/14/2017

EA Engineering, Science, and Technology, Inc., PBC

Submittal Review Sheet 1

Project Name: **Kirtland BFF Mid-Plume Pump and Treat System Expansion**			Date Received: **8/7/2017**
Project Owner: **Kirtland Air Force Base**			Checked By: **Tyler Curley**
Contractor: **Wilson Electric**	Engineer: **EA Engineering, Science and Technology, Inc., PBC.**		Log Page: **NA**
Address: **501 General Somervell SE # B** **Albuquerque, NM 87123**	Address: **320 Gold Ave. SW, Suite 1300** **Albuquerque, NM 87102**		EA No.: 62599DM01
			Spec. Section: **NA**
			Drawing/Detail No.: **E-000/E-001**
ATTN: Matthew Walstrom	ATTN: **Devon Jercinovic**	1st Sub	Re-Sub
Date Transmitted: **8/7/2017**	Prev. Transmittal Date:		

Item No.	No. Copies	Description	Manufacturer	Mfg/Vendor Dwg or Detail	Action Taken*
1	1	MV Terminations	Cooper Power Systems		**A**

The Action Designated Above is in Accordance with the Following Legend:

A – Furnish as Submitted
B – Furnish as Noted
C – Revise and Re-submit
1. Not enough information for review.
2. No reproducible submitted.
3. Copies illegible.
4. Not enough copies submitted.
5. Wrong sequence number.
6. Wrong resubmittal number.
7. Wrong Spec. Section.
8. Wrong form used.
9. See Comments.

D – Rejected
E – Engineer's Review not Required
1. Submittal not required.
2. Supplemental Information. Submittal retained for Information purposes only.
3. Information reviewed and approved on prior submittal.
4. See Comments.

Review is for general compliance with Contract Documents. No responsibility is assumed for correctness of dimensions or detail. Contractor is required to specify deviations from contract requirements. Lack of exceptions noted by Engineer does not waive Contractor's obligation to comply with Drawings and Specifications.

Comments:
Items reviewed and confirmed to meet requirements
(Reviewed Material in Parentheses)
Issues in Bold

Material Conforms to electrical drawings.

By: _____ Date: 8/8//17

Distribution: [1] Contractor [1] Engineer [1] Owner

Catalog Data
CA650003EN

Effective January 2015
Supersedes 600-30 July 2014,
600-10 February 2010

COOPER POWER SERIES

600 A 15/25 kV class BOL-T™ deadbreak connector

COOPER Power Systems - 600A 15kV 500mcm Deadbreak T-Body Kit with Test Point & Shield Adapter Kit (Complete Kit for Shielded Cable)

COOPER Power Systems - 600A 15kV #2 Deadbreak T-Body Kit with Test Point & Shield Adapter Kit (Complete Kit for Shielded Cable)

General

Eaton's Cooper Power™ series 600 A, 15/25 kV Class BOL-T™ deadbreak connector is used to terminate high-voltage underground cable on deadfront apparatus such as transformers, switches and switchgear. It is fully shielded, submersible and meets the requirements of IEEE Std 386™-2006 standard – "Separable Insulated Connector Systems".

The capacitive test point on the insulating plug provides a means of testing the circuit without disturbing the bolted connection.

In addition to the capacitive test point feature on the insulating plug, Eaton's Cooper Power series offers an optional capacitive test point similar to the test points on Eaton's Cooper Power series 200 A Elbows. This allows the use of the Type "TPR" series fault indicators, and provides a hotstick operable means of determining circuit condition when used with high impedance voltage sensing devices designed for test points.

BOL-T connectors are designed for use on solid dielectric cable (XLPE or EPR) with extruded semi-conductive shields and concentric neutral, with or without a jacket.

Installation on jacketed concentric neutral cable may require additional sealing material. Cold shrinkable adapters are available for tape shield, linear corrugated and drain wire cable adaptation for use with deadbreak connectors.

900 AMP rating

The BOL-T connector is rated for 900 A continuous when used with a coppertop compression connector, copper insulating plug, copper stud and copper bushing or junction. If a 900 A rating is desired, specify a "C" as the 9th digit when determining your part number. See Step 3, page 5.

Interchangeability

All Eaton's Cooper Power series 600 A deadbreak connectors conform to the electrical, mechanical and dimensional requirements of IEEE Std 386™-2006 standard. The connectors can be used on any comparably rated bushing interface that also meets the requirements of this standard. In addition all cable adapters, insulating plugs, compression connectors and other component parts are designed to be interchangeable with those currently available from other major manufacturers that also comply with IEEE Std 386™-2006 standard.

Installation

A torque wrench and one-inch socket are used to tighten the insulating plug through the compression or shear bolt connector within the T-body onto a de-energized 600 A bushing interface. Refer to *Service Information S600-10-2 600 A 15/25 kV Class BOL-T and Separable Splice Connector Assembly Installation Instructions* for details.

Production tests

Tests conducted in accordance with IEEE Std 386™-2006 standard:

- ac 60 Hz 1 Minute Withstand
  - 40 kV
- Minimum Partial Discharge Extinction Voltage
  - 19 kV

Tests conducted in accordance with Eaton's Cooper Power series requirements:

- Physical Inspection
- Periodic Dissection
- Periodic X-ray Analysis

Table 1. Voltage Ratings and Characteristics

Description	kV
Standard Voltage Class	25
Maximum Rating Phase-to-Ground	15.2
ac 60 Hz 1 Minute Withstand	40
dc 15 Minute Withstand	78
BIL and Full Wave Crest	125
Minimum Partial Discharge Extinction Voltage	19

Voltage ratings and characteristics are in accordance with IEEE Std 386™-2006 standard.

Table 2. Current Ratings and Characteristics

Description	Amperes
Continuous	600 A rms
4 Hour Overload	900 A rms
Short Time	40,000 A rms symmetrical for 0.17 s 27,000 A rms symmetrical for 4.0 s

Current ratings and characteristics are in accordance with IEEE Std 386™-2006 standard.

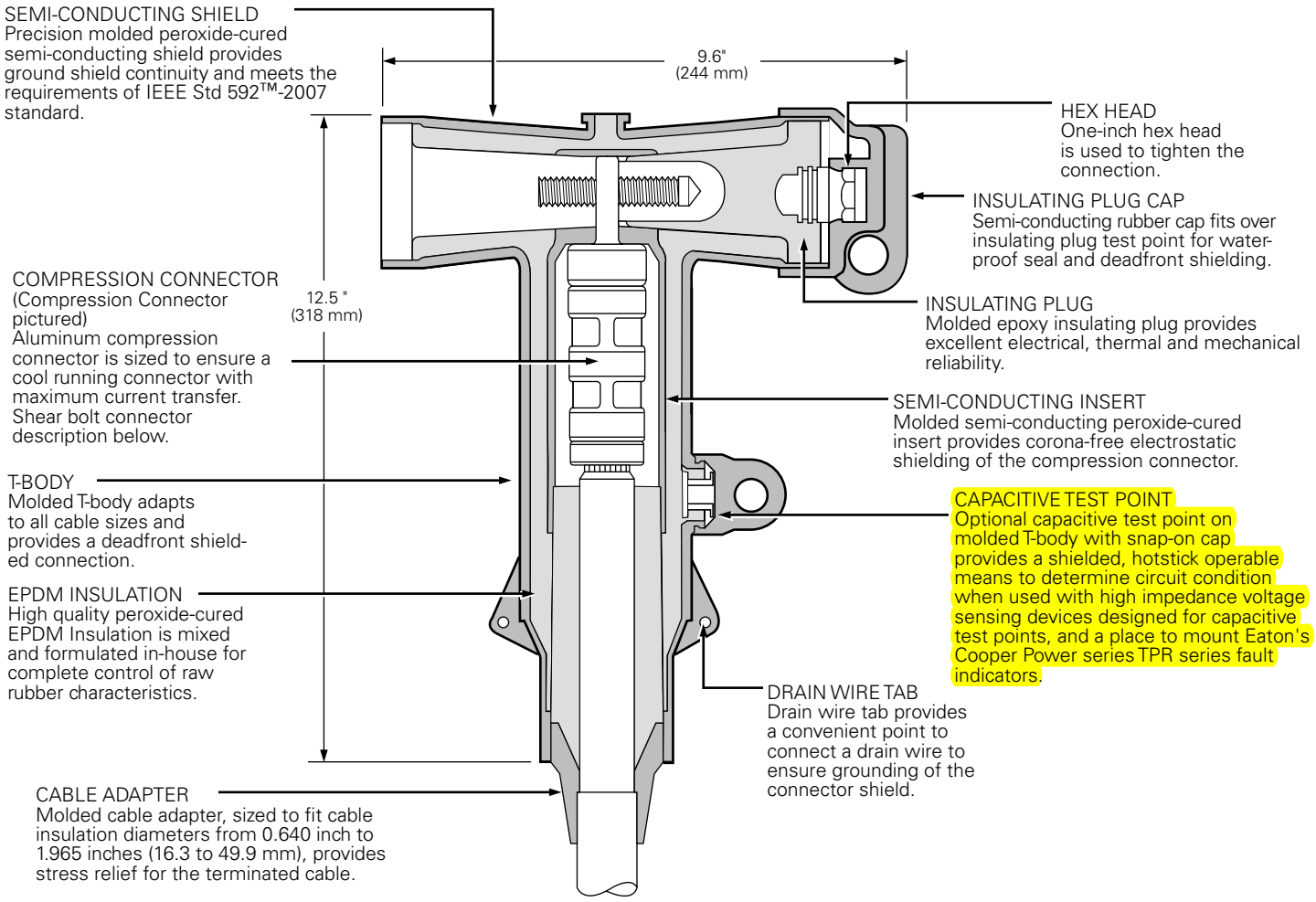

Figure 1. BOL-T Cutaway illustrates design features.

Note: Dimensions given are for reference only.

Optional features

Coppertop compression connectors

Coppertop compression connectors (aluminum sleeve welded to a copper spade) provide a high conductivity material in a bolted connection and are compatible with aluminum or copper conductors.

All copper current path

Full copper current carrying path and 900 A rating can be obtained by specifying a coppertop compression connector, copper stud and copper insulating plug.

Shear bolt connector (optional)

Bolted cable lug is fitted with stepless bolts, which shear off when optimum contact force has been reached. Provides electrical continuity for copper and aluminum conductors while eliminating need for dies and compression tools.

Figure 2. Shear bolt connector.

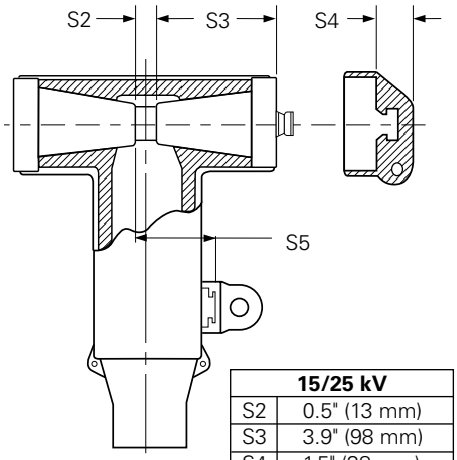

15/25 kV	
S2	0.5" (13 mm)
S3	3.9" (98 mm)
S4	1.5" (38 mm)
S5	2.4" (61 mm)

Figure 3. BOL-T stacking dimensions.

Ordering information

Each BOL-T Connector Kit contains:

- Molded Rubber T-body
- Insulating Plug
- Insulating Plug Cap
- Compression or Shear Bolt Connector
- Cable Adapter
- Silicone Lubricant
- Installation Instruction Sheet

To order a 15/25 kV Class BOL-T Connector Kit, see following Steps 1-5 to build the catalog number.

BOL-T connector kit – catalog numbering system

Build the 12 digit catalog number for a BOL-T Kit by following the steps given below. The first 5 digits are "BT625", so only digits 6 through 12 need to be selected.

1	2	3	4	5	6	7	8	9	10	11	12
B	T	6	2	5							

Catalog number digits:

1 & 2 = "BT", BOL-T Connector System

3 = "6", 600 A System

4 & 5 = "25", 25 kV Class Bushing Interface

Step 1 – Select digits 6 and 7 cable adapter range code

Determine the cable's diameter over the electrical insulation as shown in Figure 4 (including tolerances).

Then identify a cable range from Table 3 that covers the minimum and maximum insulation diameters.

Select the correct CABLE RANGE CODE from Table 3.

Table 3. Cable Diameter Range

Cable Diameter Range

Inches	mm	Code
0.610-0.970	15.5-24.6	**AB**
0.750-1.080	19.1-27.4	**CC**
0.970-1.310	24.6-33.3	**DD**
1.090-1.470	27.7-37.3	**EE**
1.260-1.640	32.0-41.7	**FF**
1.360-1.710	34.5-43.4	**GG**
1.510-1.850	38.4-47.0	**HH**
1.700-1.970	43.2-50.0	**JJ**

Step 2 – Select digits 8 and 9 conductor code

Identify the conductor size and type in Table 4 and select the CONDUCTOR CODE from the appropriate (compression or shear bolt) column.

Step 3 – Select digit 10

Determine whether Aluminum or Copper is required for the compression connector, stud, and deadbreak insulating plug. Shear bolt connector is only available as a 600 A aluminum connector.

"A" = Aluminum (Shear Bolt or Compression Connector)

"C" = Copper (Coppertop for the connector) **Required to achieve 900 A rating, compression connector only.**

Step 4 – Select digit 11

Determine if a stud should be included in the kit.

"1" = Stud Included

"2" = Stud Not Included

Step 5 – Select digit 12

Determine if the T-body should have a test point.

T = Test Point on T-body

If no test point is required, do not include an 12th digit.

EXAMPLE: Select a BOL-T Kit for 250 kcmil compressed cable with a nominal insulation diameter of 1.160" ± 0.030". The kit should have aluminum current-carrying parts and should have a stud included. The T- Body should have a test point.

Step 1 – Select digits 6 and 7

Nominal diameter over insulation is 1.160" ± 0.030".

Minimum diameter = 1.160" - 0.030" = 1.130".

Maximum diameter = 1.160" + 0.030" = 1.190".

From Table 3, identify the cable range that covers 1.130" - 1.190" and select the "EE" cable range code.

Step 2 – Select digits 8 and 9

The conductor size is 250 kcmil compressed. From Table 4, under the column "Concentric or Compressed," identify 250 kcmil and select the "17" conductor code.

Step 3 – Select digit 10

The kit should have aluminum current-carrying parts. Select an "A" for digit 10.

Step 4 – Select digit 11

The kit should include a stud, so select 1 for digit 11.

Step 5 – Select digit 12

A test point is needed, so use a "T" for digit 12.

The complete catalog number is:

BT625EE17A1T

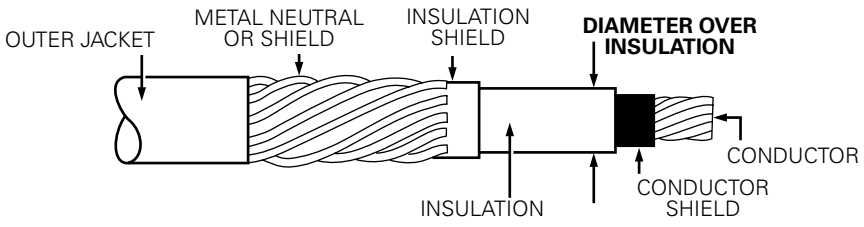

Figure 4. Illustration showing typical construction of medium voltage underground cable.

Table 4. Conductor Size and Type

Compression Connector					Shear Bolt Connector						
Concentric or Compressed		Compact or Solid			AWG or Kcmil			mm^2 Stranded & Compressed			
AWG or kcmil	mm^2	AWG or kcmil	mm^2	Compression Conductor Code	Concentric	Compressed	Compact	min	max	Shear Bolt Conductor Code	Catalog Number
No Connector				**0**	3/0	3/0	3/0	95	150	**S1**	CDT630SB150
#2	35	1	-	**11**	4/0	4/0	4/0				
#1	-	1/0	50	**12**	250	250	250				
1/0	50	2/0	70	**13**	-	-	350				
2/0	70	3/0	-	**14**	350	350	-	185	300	**S3**	CDT630SB300
3/0	-	4/0	95	**15**	500	500	500				
4/0	95	250	120	**16**	600	600	600				
250	120	300	-	**17**	-	-	700				
300	-	350	-	**18**	700	700	-	400		**S4**	CDT630SB400
350	-	400	185	**19**	750	750	750				
400	185	450	-	**20**	-	800	800				
450	-	500	240	**21**	-	-	900				
500	240	600	300	**22**							
600	300	700	-	**23**							
650	-	750	-	**24**							
750	-	900	-	**25**							
900	-	1000	500	**26**							
1000	500	-	-	**27**							
1250	630	-	-	**28**							

Accessories

Cable adapters, compression connectors, and other accessories that can be used with BOL-T connectors are described in Section 600-46, "Deadbreak Accessories, Tools, and Replacement Parts."

Table 5. Replacement Parts

Description	Catalog Number
T-body without Test Point	DT625
T-body with Test Point	DT625T
T-body without Test Point With Aluminum Stud	DT625SA
T-body without Test Point With Copper Stud	DT625SC
T-body with Test Point With Aluminum Stud	DT625TSA
T-body with Test Point With Copper Stud	DT625TSC
Insulating Plug Cap	DIPCAP
Aluminum Insulating Plug with Cap (No Stud)	DIP625A
Copper Insulating Plug with Cap (No Stud)	DIP625C
Aluminum Insulating Plug with Cap and Aluminum Stud	DIP625AS
Copper Insulating Plug with Cap and Copper Stud	DIP625CS
5/8" – 11 UNC 2A Aluminum Threaded Stud	STUD-A
5/8" – 11 UNC 2A Copper Threaded Stud	STUD-C

Shield Adapter Kit

SA Series Cold Shrinkable Metallic Shield Adapter Kit

The SA Series Cold Shrinkable Metallic Shield Adapter Kits make it simple and easy to seal and ground metallic shielded cable when terminating 200 A loadbreak and deadbreak elbows, 600 A deadbreak T-connectors, and splices. The SA Series Shield Adapters can be installed on tape shield, drain wire or UniShield® cables.

Sealing and grounding metallic shielded cable is simple and easy

Features:

Wide Range Taking. The cold shrinkable metallic shield adapter allows the customer to cover a wide cable range, using only four shield adapter part numbers.

Easy Installation. The cold shrinkable metallic shield adapters offer a number of installation benefits:

- Minimal installation force required
- No special tools, soldering or open flame required
- No additional cable stripping (uses standard stripbacks)
- No handling sharp copper leaves or crimping operations
- No cumbersome coiled spring to break or misplace
- No messy grease
- Elbow drain wire built into the flexible ground strap

Stocking flexibility. The cold shrinkable metallic shield adapter allows distributors and customers to reduce the number of stocking kits. The same kit can ground and seal tape shield, drain wire or UniShield® cable.

Shield Adapter Kit Catalog Number	Cable Jacket OD (Inches)
SA1	0.590 - 1.050
SA2	0.830 - 1.640
SA3	1.270 - 2.170
SA4	1.600 - 2.600

How to Order:

The SA Series Cold Shrinkable Metallic Shield Adapter Kits are sized using the cable jacket outside diameter (OD). Refer to Table below.

Note: To include the SA series Cold Shrinkable metallic Shield Adapters with any Cooper Power Systems termination kit, (Elbow, T-body or Splice): Add appropriate Suffix “SA1”, “SA2”, “SA3” or “SA4” to the end of the termination catalog number.

Each kit contains:

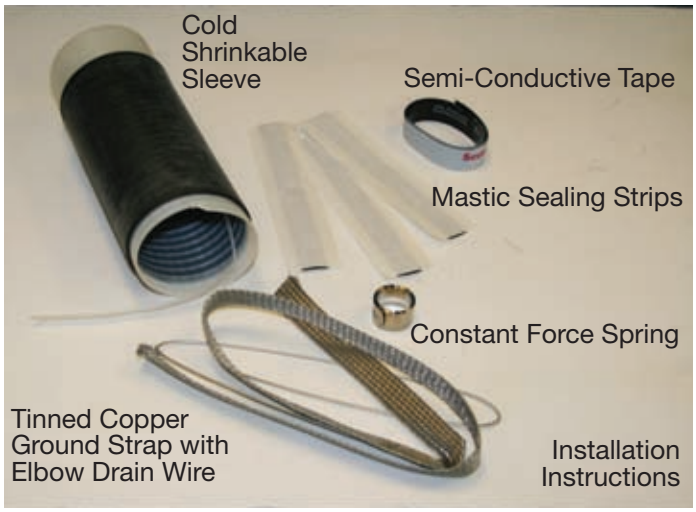

Cooper Power Systems
2300 Badger Drive
Waukesha, WI 53188
P: 877.CPS.INFO

COOPER Power Systems

www.cooperpower.com

B500-00095 • December 2009 Supersedes 00095 12/00

Cooper Power Systems is a valuable trademark of Cooper Industries in the U.S. and other countries.
You are not permitted to use the Cooper Trademarks without the prior written consent of Cooper Industries.
UniShield® is a registered trademark of Unitech, LLC.
©2009 Cooper Industries. All Rights Reserved

Cold Shrink

QT-III Indoor and Outdoor Terminations

3M™ Cold Shrink Silicone Rubber QT-III terminations are designed for faster installation and higher reliability.

Cold Shrink QT-III Indoor Termination 1

Cold Shrink QT-III Outdoor Termination 2

3M Cold Shrink QT-III terminations offer easy installation and reliable performance when terminating indoor and outdoor medium voltage cable. The built-in Hi-K stress controlling compound along with the built in sealing compound means simpler installation on all types of cables. These factory applied compounds make field installation easier and reduce installation errors. Plus its high-K stress design delivers excellent BIL performance and lower surface stress resulting in a more compact termination. Through superior engineering, 3M Cold Shrink QT-III terminations deliver maximum performance.

QT-III Inverted applications

Terminations that are inverted inside of equipment (switchgear, transformers, etc.) can be made using the QT-III indoor tubular design. However, for outdoor applications skirted terminations are recommended. The standard skirts of most terminations are oriented to shed water when installed in the upright direction. The skirts could collect moisture and contamination when inverted. This could lead to tracking problems. 3M has designed the 7600-S-INV series inverted kits to eliminate this problem. These inverted kits are recommended for all outdoor inverted applications.

Cold Shrink technology; over 30 years of field-proven reliability

Over thirty years ago, 3M pioneered Cold Shrink technology. Since then, field use and laboratory analysis have repeatedly proven its merits and reliability. Through constant innovation, we have refined Cold Shrink products making them better than ever. They're easier to apply and built to withstand even the most punishing environmental conditions. Enhanced performance at a lower installed cost continue to make 3M the preferred choice for Cold Shrink solutions.

QT-III Termination Features

Improved long term reliability
- Hydrophobic silicone body
- Superior track and erosion resistance
- Optimum high-K stress control
- Built-in sealing and stress controlling compounds
- Outstanding UV stability
- Designed to meet IEEE 48, CENELEC 0278 and IEC 502 standards
- Easier installation
- Installation requires no silicone tape or grease
- Shorter installed length

Cold Shrink Benefits

Lower Installed Cost
- Minimal training required
- All materials included in the kit
- Easy cable preparation
- Compact to fit into smaller equipment

High Reliability
- No heat, flames or special tools needed
- Simple, straight forward installation
- Built-in stress relief
- 30 years of proven field experience

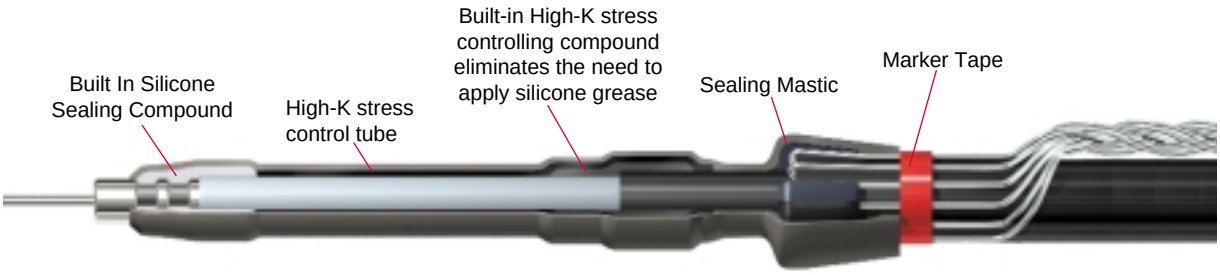

Cold Shrink QT-III Indoor Termination

Kit number	Bil	Cable insulation O.D. range in. (mm)	Conductor size range AWG and kcmil (mm²) 5kV	8.7kV	15kV	25/28kV	★35kV
Shielded Cable Kits (Each Shielded Cable Kit makes three terminations.)							
7620-T-95	95kV	0.32-0.59 (8,2-15,0)	8-4	8-6	—	—	
7621-T-95	95kV	0.44-0.89 (11,2-22,7)	2-3/0	4-2/0	—	—	
7622-T-110	110kV	0.64-1,08 (16,3-27,4)	4/0-400	3/0-300	2-4/0 (35-120)	—	
7624-T-110	110kV	0.83-1.53 (21,1-38,9)	500-750	350-700	4/0-500 (120-240)	—	
7625-T-110	110kV	1.05-1.80 (26,7-45,7)	700-1500	600-1250	500-1000 (240-500)	—	
7626-T-110	110kV	1.53-2.32 (38,9-58,9)	1750-2000	1500-2000	1250-2000 (500-1000)	—	
7693-T-150	150kV	0.72-1.29 (18,3-32,8)	300-500	250-500	2/0-300 (70-150)	2-4/0 (35-120)	2-2/0 (35-70)
7695-T-150	150kV	1.05-1.80 (26,7-45,7)	700-1500	600-1250	500-1000 (240-500)	250-800 (150-400)	3/0-600 (95-325)
7696-T-150	150kV	1.53-2.32 (38,9-58,9)	1750-2000	1500-2000	1250-2000 (500-1000)	900-1750 (500-800)	700-1500 (400-725)
Concentric and Jacketed Concentric Cable Kits (Each Concentric and Jacketed Concentric Cable Kit makes one termination.)							
7642-T-110	110kV	0.64-1.08 (16,3-27,4)	4/0-400	3/0-300	2-4/0 (35-120)	—	
7644-T-110	110kV	0.83-1.53 (21,1-38,9)	500-750	350-700	4/0-500 (120-240)	—	
7645-T-110	110kV	1.05-1.80 (26,7-45,7)	700-1500	600-1250	500-1000 (240-500)	—	
7646-T-110	110kV	1.53-2.32 (38,9-58,9)	1750-2000	1500-2000	1250-2000 (500-1000)	—	
7653-T-150	150kV	0.72-1.29 (18,3-32,8)	300 -500	250 - 500	2/0-300 (70-150)	2-4/0 (35-120)	2-2/0 (35-70)
7655-T-150	150kV	1.05-1.80 (26,7-45,7)	700-1500	600-1250	500-1000 (240-500)	250-800 (150-400)	3/0-600 (95-325)
7656-T-150	150kV	1.53-2.32 (38,9-58,9)	1750-2000	1500-2000	1250-2000 (500-1000)	900-1750 (500-800)	700-1500 (400-725)
High Fault Current Cable Kits (Each High Fault Current Cable Kit makes one termination.)							
7642-T-HSG-110	110kV	0.64-1.08 (16,3-27,4)	4/0-400	3/0-300	2-4/0 (35-120)	—	
7644-T-HSG-110	110kV	0.83-1.53 (21,1-38,9)	500-750	350-700	4/0-500 (120-240)	—	
7645-T-HSG-110	110kV	1.05-1.80 (26,7-45,7)	700-1500	600-1250	500-1000 (240-500)	—	
7646-T-HSG-110	110kV	1.53-2.32 (38,9-58,9)	1750-2000	1500-2000	1250-2000 (500-1000)	—	
7653-T-HSG-150	150kV	0.72-1.29 (18,3-32,8)	300 -500	250 - 500	2/0-300 (70-150)	2-4/0 (35-120)	2-2/0 (35-70)
7655-T-HSG-150	150kV	1.05-1.80 (26,7-45,7)	700-1500	600-1250	500-1000 (240-500)	250-800 (150-400)	3/0-600 (95-325)
7656-T-HSG-150	150kV	1.53-2.32 (38,9-58,9)	1750-2000	1500-2000	1250-2000 (500-1000)	900-1750 (500-800)	700-1500 (400-725)

★ 150kV impulse level meets the impulse requirements for 35.0kV class equipment where indoor terminations are used.

Please contact your local 3M representative for more information.

Continued from page Recent Additions 7

NEW FEATURE!
NOW LISTED FOR GROUNDING, BONDING & DIRECT BURIAL APPLICATIONS

2 HOLE NEMA SPACING

Catalog Number	Copper Cond. Range†	Wire Dia. (in) ‡	Stud Size	Approximate Dimensions (in inches) E	W	D	L	Die Color Code	Crimping Tool Reference+++ Penn-Union PUC Dies	Pressure Setting TDY-1	Pressure Setting TDY-U	Alt. Tooling Burndy Index No.	Alt. Tooling T&B Die
BBLU-6DN	6 Str.	.184	1/2	1 3/4	13/16	3	4 11/32	Blue	T-7*/374*			B-7	24
BBLU-4D1	4 Str.	.232	1/2	1 3/4	15/16	2 7/8	4 15/64	Gray	T-8*/346*			B-8	29
BBLU-2D6	2 Str.	.292	1/2	1 3/4	13/16	3	4 33/64	Brown	T-10			B-10	33
BBLU-1D2	1 Str.	.332	1/2	1 3/4	25/32	3	4 5/8	Green	T-11/375	2		B-11	37
BBLU-1/0D-2NTC38 BBLU-1/0D3	1/0 Str.	.375	3/8 1/2	1 3/4 1 3/4	3/4 13/16	2 5/8 2 7/8	4 5/16 4 9/16	Pink	T-12/348			B-12	42
BBLU-2/0D	2/0 Str.	.419	1/2	1 3/4	13/16	3	4 13/16	Black	T-13			B-13	45
BBLU-3/0D	3/0 Str.	.470	1/2	1 3/4	29/32	3	4 7/8	Orange	T-14			B-14	50
BBLU-4/0D	4/0 Str.	.528	1/2	1 3/4	1	3	5 1/16	Purple	T-15	5	5	B-15	54
BBLU-025D	250 MCM	.575	1/2	1 3/4	1 1/8	3	5 1/8	Yellow	T-16			B-16	62
BBLU-030D	300 MCM	.634	1/2	1 3/4	3/16	3	5 9/16	White	T-17*			B-17	66H/66
BBLU-035D	350 MCM	.682	1/2	1 3/4	5/16	3	5 5/8	Red	T-18/ T-324	7	7	B-18	71H/71
BBLU-040D	400 MCM	.728	1/2	1 3/4	1 13/32	3	5 13/16	Blue	T-19*/470*			B-19	76H/76
BBLU-050D	500 MCM	.815	1/2	1 3/4	1 17/32	3	6	Brown	T-20/T-299			B-20	87
BBLU-060D	600 MCM	.893	1/2	1 3/4	1 23/32	3	6 9/16	Green	T-22/472	9	9	B-22	94H/94
BBLU-065D	650 MCM	.930	1/2	1 3/4	1 25/32	3	6 11/16	Pink	–			B-300	99
BBLU-075D	750 MCM	.999	1/2	1 3/4	1 29/32	3	6 13/16	Black	T-24*/473			B-24	106H/106
BBLU-080D	800 MCM	1.031	1/2	1 3/4	1 31/32	3	7	Orange	–			B-25	107H/107
BBLU-100D1	1000 MCM	1.153	1/2	1 3/4	2 3/16	3	7 1/8	White	–	9***	9***	B-27	125
BBLU-150D1	1500 MCM	1.412	1/2	1 3/4	2 11/16	3	7 7/16	Green	–			B-31	–
BBLU-200D1	2000 MCM	1.632	1/2	1 3/4	3 5/64	3	7 3/4	Brown	–			B-34	–

2 HOLE ASSORTED LUGS

BBLU-6D-2TC14	6 Str.	.184	1/4	5/8	13/32	1 9/32	2 21/32	Blue	T-7*/374*			B-7	24
BBLU-4D-2TC14	4 Str	.232	1/4	5/8	1/2	1 9/32	2 11/16	Gray	T-8*/346*			B-8	29
BBLU-3D	3 Str.	.260	5/16	7/8	17/32	1 5/8	3 1/32	White	T-9*			B-9	–
BBLU-2D	2 Str.	.292	5/16	3/4	5/8	1 15/32	3 7/32	Brown	T-10	2		B-10	33
BBLU-1D	1 Str	.332	5/16	7/8	11/16	1 5/8	3 3/8	Green	T-11/375			B-11	37
BBLU-1/0D	1/0 Str.	.375	5/16	7/8	3/4	1 19/32	3 5/16	Pink	T-12/348			B-12	42
BBLU-100D	1000 MCM	1.153	1/2	1 1/4	2 3/16	2 3/8	6 1/2	White	–	9***	9***	B-27	125
BBLU-150D	1500 MCM	1.412	1/2	1 3/8	2 11/16	2 1/2	6 15/16	Green	–			B-31	–
BBLU-200D	2000 MCM	1.632	1/2	1 1/2	3 5/64	3	7 3/8	Brown	–			B-34	–

+ Concentric, compressed and compact stranding.
++ For conversion to metric range see Master Catalog
+++ For additional tool references see Master Catalog
* Consult factory for availability of dies not available at this time.
*** CUAD-1000

Loadbreak Apparatus Connectors

COOPER Power Systems

COOPER Power Systems - 200A 15kV #2 Loadbreak Elbow Kit with Test Point & Shield Adapter Kit (Complete Kit for Shielded Cable)

200 A 15 kV Class Loadbreak Elbow Connector with Optional Integral Jacket Seal

500-10-7

GENERAL

The Cooper Power Systems Loadbreak Elbow Connector is a fully-shielded and insulated plug-in termination for connecting underground cable to transformers, switching cabinets and junctions equipped with loadbreak bushings. The elbow connector and bushing insert comprise the essential components of all loadbreak connections. The Cooper Elbow Connector is a fully rated 200 A switching device, designed in accordance to IEEE Std 386™ standard - latest revision.

Cooper Loadbreak Elbows are molded using high quality peroxide-cured insulating and semi-conducting EPDM rubber. Standard features include a coppertop connector, tin-plated copper loadbreak probe with an ablative arc-follower tip and stainless steel reinforced pulling-eye. An optional capacitive test point, made of corrosion resistant plastic, is available for use with fault indicators (see Catalog Section 320-40 and 320-42).

Cable ranges are designed to accept a wide range of cable conductor and insulation sizes with just three elbows and accommodate cable manufactured to either **AEIC** or **ICEA** standards.

The coppertop compression connector is a standard item to transition from the cable to the loadbreak probe. An aluminum crimp barrel is inertia-welded to a copper lug. The aluminum barrel makes the connector easy to crimp and the copper lug ensures a reliable, tight, cool operating connection with the loadbreak probe.

OPTIONAL INTEGRAL JACKET SEAL

The optional integral jacket seal provides a quick and easy means to sealing the cable jacket to prevent moisture ingress. Our jacket seal is molded to the loadbreak elbow eliminating the need for separate cable sealing products. It's available with braided ground strap/ bleeder wire for terminating Tape shielded cable. (See Figure 5.)

Figure 1

Figure 1A

Figure 1.
Loadbreak Elbow Connector with optional integral jacket seal and without test point shown.
Figure 1A (right)
Loadbreak Elbow without jacket seal and with test point.

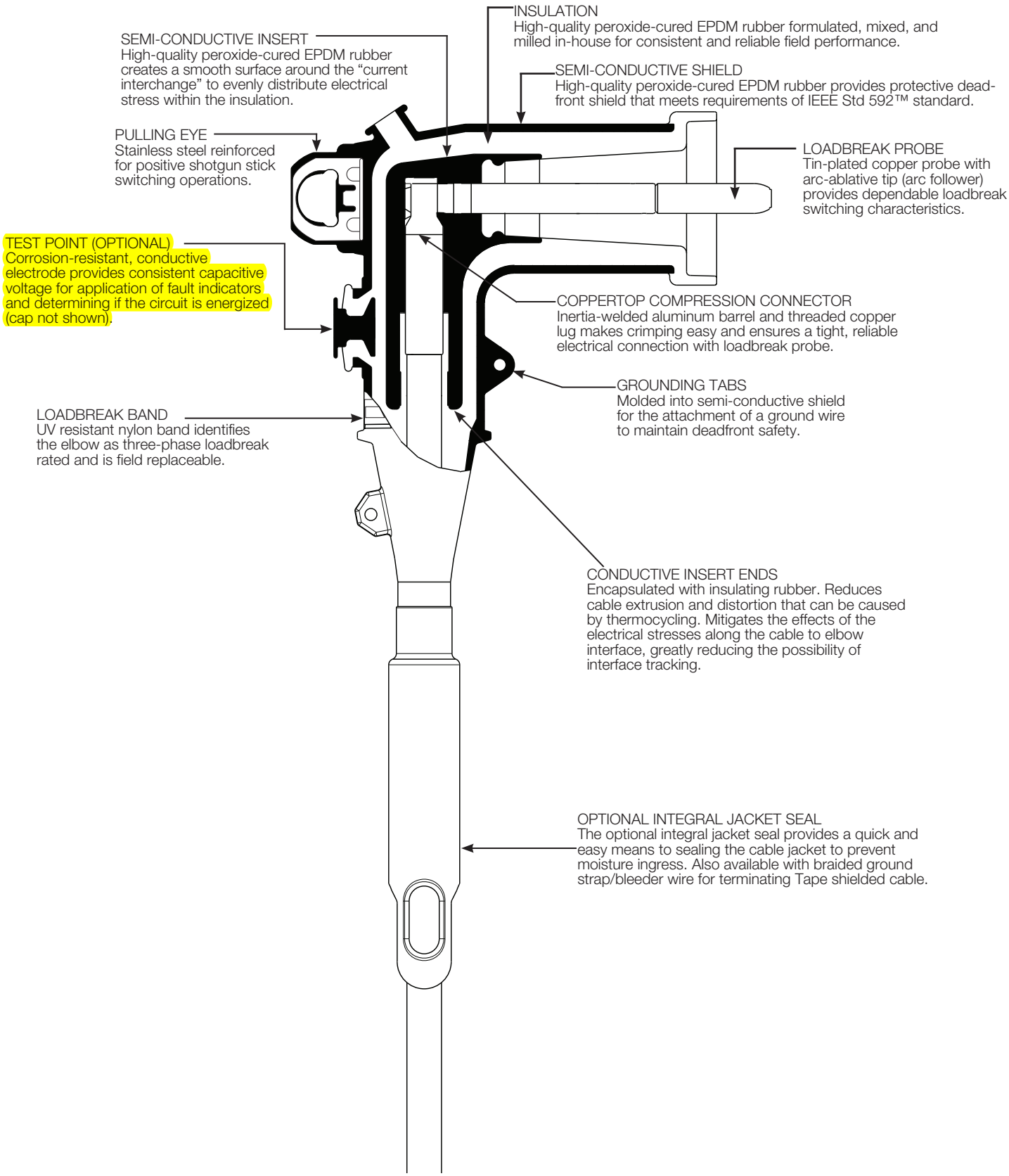

Figure 2.
Cutaway drawing shows design detail.

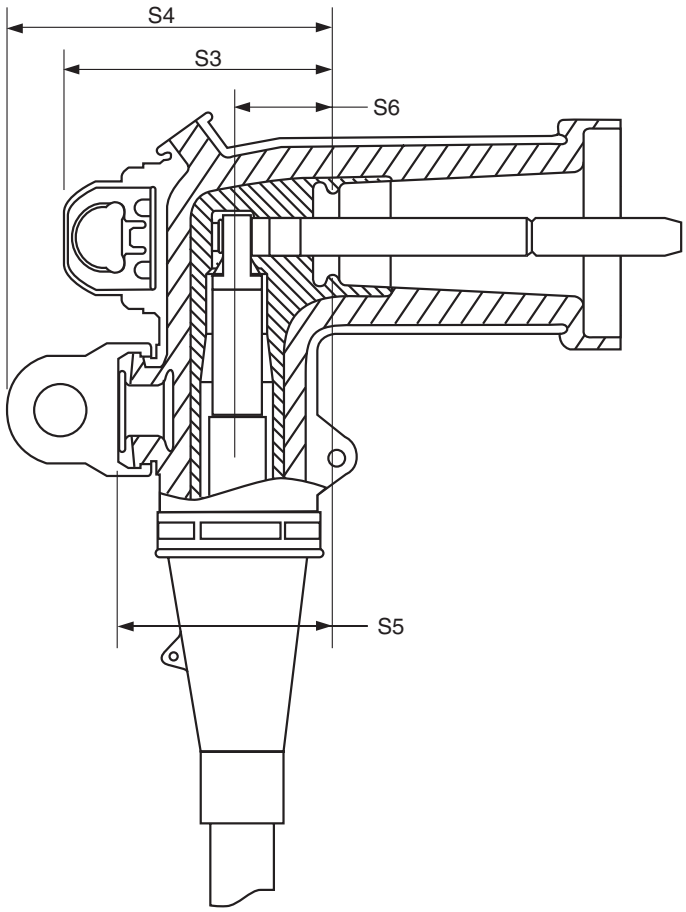

S Dim.	15 kV
S3	3.4” (86 mm)
S4	4.2” (106 mm)
S5	2.7” (68 mm)
S6	1.2” (30 mm)

NOTE: Dimensions given are for reference only.

Figure 3.
Elbow profile and stacking dimensions as referenced in IEEE Std 386™ standard.

INSTALLATION

Cable stripping and scoring tools, available from various tool manufacturers, are recommended for use when installing loadbreak elbows. After preparing the cable, the elbow housing is pushed onto the cable. The loadbreak probe is threaded into the coppertop connector using the supplied installation tool or an approved equivalent. Use a shotgun stick to perform loadmake and loadbreak operations. Refer to Installation Sheet S500-10-7 for details.

PRODUCTION TESTS

Tests conducted in accordance with IEEE Std 386™ standard:
- AC 60 Hz 1 Minute Withstand — 34 kV
- Minimum Corona Voltage Level — 11 kV
- Test Point Voltage Test

Tests conducted in accordance with Cooper Power Systems requirements:
- Physical Inspection
- Periodic Dissection
- Periodic X-ray Analysis

TABLE 1
Voltage Ratings and Characteristics

Description	kV
Standard Voltage Class	15
Maximum Rating Phase-to-Phase	14.4
Maximum Rating Phase-to-Ground	8.3
AC 60 Hz 1 Minute Withstand	34
DC 15 Minute Withstand	53
BIL and Full Wave Crest	95
Minimum Corona Voltage Level	11

Voltage ratings and characteristics are in accordance with IEEE Std 386™ standard.

TABLE 2
Current Ratings and Characteristics

Description	Amperes
Continuous	200 A rms
Switching	10 operations at 200 A rms at 14.4 kV
Fault Closure	10,000 A rms symmetrical at 14.4 kV for 0.17 s after 10 switching operations
Short Time	10,000 A rms symmetrical for 0.17 s
	3,500 A rms symmetrical for 3.0 s

Current ratings and characteristics are in accordance with IEEE Std 386™ standard.

ORDERING INFORMATION

The Elbow kits are packaged in a heavy duty polyethylene bag. There are 20 bagged kits to a carton. Individual boxed kits are also available by special part number. To order a 15 kV Class Loadbreak Elbow Kit follow the easy steps below.

Each kit contains:

- Standard Elbow Body or Elbow Body with Jacket Seal
- Coppertop Compression Connector
- Loadbreak Probe
- Probe Installation Tool
- Silicone Lubricant
- Mastic Strips (**Jacket Seal Elbow Only**)
- Installation Instruction Sheet

STEP 1: Determine the cable's diameter over the electrical insulation as shown in Figure 4 (including tolerances) from cable manufacturer. Then identify a cable range from Table 3 that brackets the minimum and maximum insulation diameters. Select the CABLE RANGE CODE from the far right column.

STEP 2: Identify the conductor size and type in Table 4 and select the CONDUCTOR CODE from the far right column.

STEP 3: For an elbow kit with a capacitive test point order:

LE215	CABLE RANGE CODE	CONDUCTOR CODE	T

For an integral jacket seal elbow kit with a capacitive test point order:

LEJ215	CABLE RANGE CODE	CONDUCTOR CODE	T

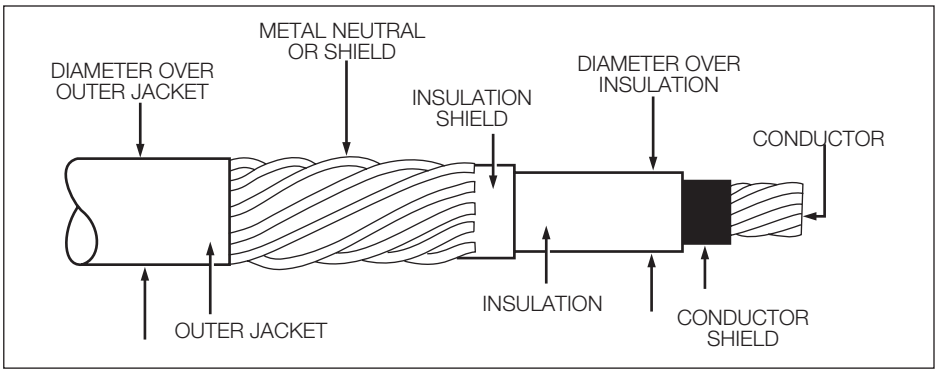

Figure 4.
Illustration showing typical construction of high voltage underground cable.

For an elbow kit without a capacitive test point order:

LE215	CABLE RANGE CODE	CONDUCTOR CODE

For an integral jacket seal elbow kit without a capacitive test point order:

LEJ215	CABLE RANGE CODE	CONDUCTOR CODE

For an elbow kit without a compression connector, use "**00**" for the conductor code.

For an elbow kit with a hold down bail assembly included, insert a "**B**" after the test point option code.

STEP 4: For optional braided ground strap/bleeder wire for terminating tape shielded cable, insert "**GS**" after test point and/or bail option code. (**Integral Jacket Seal Elbow Only**)

STEP 5: (Optional) For an elbow kit individually packaged in a corrugated cardboard box, insert an "**X**" as the last character in the part number.

Table 3
Cable Range for Loadbreak Elbow

Inches	Millimeters	Cable Range Code
0.495" - 0.585"	12.6 - 14.9	CCA*
0.575" - 0.685"	14.6 - 17.4	CCB*
0.610" - 0.970"	15.5 - 24.6	AB
0.750" - 1.080"	19.1 - 27.4	CC
0.890" - 1.220"	22.6 - 30.0	DD

* Uses 5 kV cable adapter.
(For use with "CC" range elbow only.)

TABLE 4
Conductor Size and Type

Class B Stranded or Compressed		Compact or Solid		CONDUCTOR CODE
AWG	mm^2	AWG	mm^2	
No Connector				**00**
#6	16	#4	—	**01**
#4	—	#3	25	**02**
#3	25	#2	35	**03**
#2	35	#1	—	**04**
#1	—	1/0	50	**05**
1/0	50	2/0	70	**06**
2/0	70	3/0	—	**07**
3/0	—	4/0	95	**08**
4/0	95	250	120	**09**
250*	120	300	—	**10**

*Compressed stranding only.

EXAMPLE: Select an integral jacket seal elbow kit with a capacitive test point for use on a #1 compact cable with a minimum insulation diameter of 0.770" and a maximum diameter of 0.830".

STEP 1: From Table 3, identify the cable range 0.610"—0.970" and select the "**AB**" CABLE RANGE CODE.

STEP 2: The conductor size is a #1 and the type is compact.

From Table 4, under the column "Compact or Solid" identify #1 and select the "**04**" conductor code.

STEP 3: Order catalog number.

LEJ215AB04T

TABLE 5
Replacement 2.88" Long Coppertop Connectors

Conductor Size				Catalog Number
Concentric or Compressed		Compact or Solid		
AWG	mm^2	AWG	mm^2	
#6	16	#4	—	CC2C01T
#4	—	#3	25	CC2C02T
#3	25	#2	35	CC2C03T
#2	35	#1	—	CC2C04T
#1	—	1/0	50	CC2C05T
1/0	50	2/0	70	CC2C06T
2/0	70	3/0	—	CC2C07T
3/0	—	4/0	95	CC2C08T
4/0	96	250	120	CC2C09T
250*	120	300	—	CC2C10T

* Compressed stranding only.
Note: Coppertop compression connector may be used on both aluminum and copper cable conductors.

TABLE 6
Replacement Parts

Description	Catalog Number
Hold Down Bail Assembly	2638351C01B
5 kV Cable Adapter (for use with "C" Elbow size only), .495" — .585" .575" — .685"	 CA225A CA225B
Loadbreak Band (package of 25)	2639139B01B
Probe Kit (includes Probe, Installation Tool, Silicone Lubricant, Installation Instruction Sheet)	PK215
Loadbreak Probe Installation Tool	2602733A01
Loadbreak Probe Only	2637552C03
Silicone Grease 0.175 oz tube (5 grams) 5.3 oz tube (150 grams)	 2603393A03 2605670A02M
Includes Ground Braid, Constant Force Spring and Mastic	GRDBRAIDKIT

ACCESSORIES

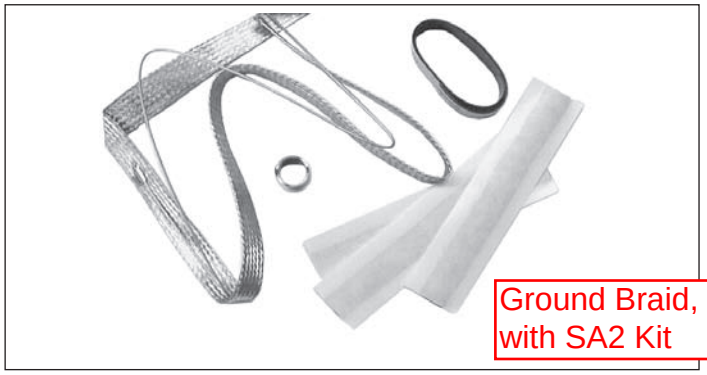

Figure 5.
Braided Ground Strap Accessories (see Table 6).

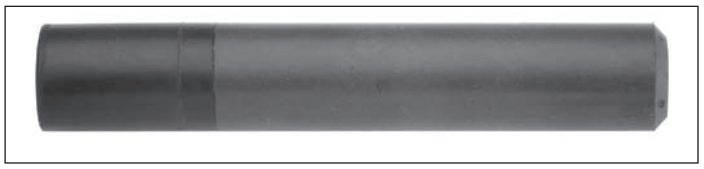

Figure 6.
5 kV Cable Adapter (see Table 6).

Figure 7.
Optional Bail Assembly (see Table 6).

Shield Adapter Kit

SA Series Cold Shrinkable Metallic Shield Adapter Kit

The SA Series Cold Shrinkable Metallic Shield Adapter Kits make it simple and easy to seal and ground metallic shielded cable when terminating 200 A loadbreak and deadbreak elbows, 600 A deadbreak T-connectors, and splices. The SA Series Shield Adapters can be installed on tape shield, drain wire or UniShield® cables.

Sealing and grounding metallic shielded cable is simple and easy

Features:

Wide Range Taking. The cold shrinkable metallic shield adapter allows the customer to cover a wide cable range, using only four shield adapter part numbers.

Easy Installation. The cold shrinkable metallic shield adapters offer a number of installation benefits:

- Minimal installation force required
- No special tools, soldering or open flame required
- No additional cable stripping (uses standard stripbacks)
- No handling sharp copper leaves or crimping operations
- No cumbersome coiled spring to break or misplace
- No messy grease
- Elbow drain wire built into the flexible ground strap

Stocking flexibility. The cold shrinkable metallic shield adapter allows distributors and customers to reduce the number of stocking kits. The same kit can ground and seal tape shield, drain wire or UniShield® cable.

Shield Adapter Kit Catalog Number	Cable Jacket OD (Inches)
SA1	0.590 - 1.050
SA2	0.830 - 1.640
SA3	1.270 - 2.170
SA4	1.600 - 2.600

How to Order:

The SA Series Cold Shrinkable Metallic Shield Adapter Kits are sized using the cable jacket outside diameter (OD). Refer to Table below.

Note: To include the SA series Cold Shrinkable metallic Shield Adapters with any Cooper Power Systems termination kit, (Elbow, T-body or Splice): Add appropriate Suffix “SA1”, “SA2”, “SA3” or “SA4” to the end of the termination catalog number.

Each kit contains:

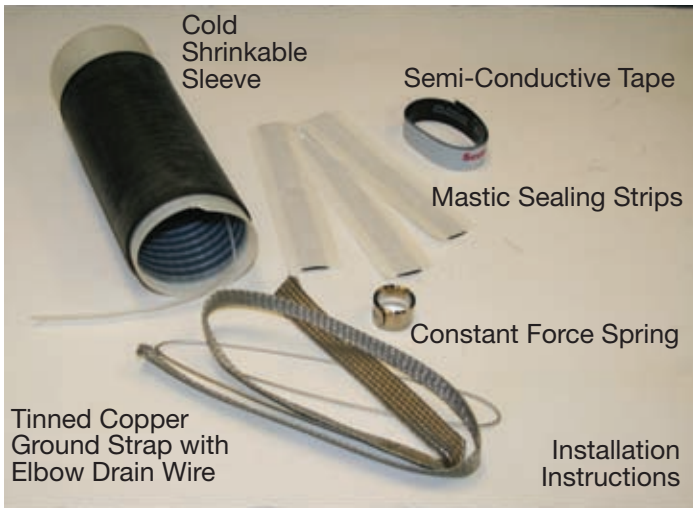

Cooper Power Systems
2300 Badger Drive
Waukesha, WI 53188
P: 877.CPS.INFO

COOPER Power Systems

www.cooperpower.com

B500-00095 • December 2009 Supersedes 00095 12/00

Cooper Power Systems is a valuable trademark of Cooper Industries in the U.S. and other countries.
You are not permitted to use the Cooper Trademarks without the prior written consent of Cooper Industries.
UniShield® is a registered trademark of Unitech, LLC.
©2009 Cooper Industries. All Rights Reserved

DEPARTMENT OF THE ARMY
ALBUQUERQUE DISTRICT, CORPS OF ENGINEERS
ALBUQERQUE DISTRICT OFFICE
4101 JEFFERSON PLAZA NE
ALBUQUERQUE, NM 87109

SUBMITTAL REVIEW VERIFICATION SHEET

PROJECT TITLE: Kirtland BFF Mid-Plume Pump and Treat System Expansion
CONTRACT NUMBER: W912DR-12-D-0006 DM01
DATE RECEIVED: 8-16-2017
DATE REVIEWED: 8-21-2017

DESCRIPTION OF ITEMS REVIEWED:

1. Breaker and Junction Boxes

NO EXCEPTIONS TAKEN.	
EXCEPTIONS AS NOTED ON DRAWINGS AND/OR ATTACHED SHEETS(S). RESUBMISSION NOT REQUIRED.	**X**
EXCEPTIONS AS NOTED ON DRAWINGS AND/OR ATTACHED SHEETS(S). RESUBMISSION REQUIRED.	
RECEIPT ACKKNOWLEDGED.	

Notes:

See attached comments.

NOTE: ITEMS REVIEWED AS TO GENERAL LAYOUT ONLY. DIMENSIONS AND QUANTITIES NOT CHECKED. REVIEW DOES NOT RELIEVE CONTRACTOR OF RESPONSIBILITIES FOR ANY ERRORS WHICH MAY EXIST AS CONTRACTOR SHALL BE RESPONSIBLE FOR DIMENSIONS AND DESIGN OF ADEQUATE CORRECTIONS, DETAILS AND SATISFACTORY CONSTRUCTION OF WORK.

SIGNATURE SANCHEZ.AMY.ELIZABETH.1454434338 Digitally signed by SANCHEZ.AMY.ELIZABETH.1454434338 DN: c=US, o=U.S. Government, ou=DoD, ou=PKI, ou=USA, cn=SANCHEZ.AMY.ELIZABETH.1454434338 Date: 2017.08.21 13:33:38 -06'00' **DATE** 8/21/2017

EA Engineering, Science, and Technology, Inc., PBC

Submittal Review Sheet 1

Project Name: **Kirtland BFF Mid-Plume Pump and Treat System Expansion**				Date Received: **8/15/2017**
Project Owner: **Kirtland Air Force Base**				Checked By: **Tyler Curley**
Contractor: **Wilson Electric**	Engineer: **EA Engineering, Science and Technology, Inc., PBC.**			Log Page: **NA**
Address: **501 General Somervell SE # B** **Albuquerque, NM 87123**	Address: **320 Gold Ave. SW, Suite 1300** **Albuquerque, NM 87102**			EA No.: 62599DM01
				Spec. Section: **NA**
				Drawing/Detail No.: **E-000/E-001**
ATTN: Matthew Walstrom	ATTN: **Devon Jercinovic**		1st Sub	Re-Sub
Date Transmitted: **8/15/2017**	Prev. Transmittal Date:			

Item No.	No. Copies	Description	Manufacturer	Mfg/Vendor Dwg or Detail	Action Taken*
1	1	Breaker and Junction Boxes	Siemens		**A**

The Action Designated Above is in Accordance with the Following Legend:

A – Furnish as Submitted
B – Furnish as Noted
C – Revise and Re-submit
1. Not enough information for review.
2. No reproducible submitted.
3. Copies illegible.
4. Not enough copies submitted.
5. Wrong sequence number.
6. Wrong resubmittal number.
7. Wrong Spec. Section.
8. Wrong form used.
9. See Comments.

D – Rejected
E – Engineer's Review not Required
1. Submittal not required.
2. Supplemental Information. Submittal retained for Information purposes only.
3. Information reviewed and approved on prior submittal.
4. See Comments.

Review is for general compliance with Contract Documents. No responsibility is assumed for correctness of dimensions or detail. Contractor is required to specify deviations from contract requirements. Lack of exceptions noted by Engineer does not waive Contractor's obligation to comply with Drawings and Specifications.

Comments:
Items reviewed and confirmed to meet requirements
(Reviewed Material in Parentheses)
Issues in Bold

Electric components conform to drawings.

By: _____ Date: 8/16//17

Distribution: [1] Contractor [1] Engineer [1] Owner

Submittal

BULK FUELS FACILITY

Type:	**Gear**
Electrical Contractor:	**Wilson Electric**
Distributor:	**CED** **701A Comanche N.E.** **Albuquerque, NM 87107**
Date:	**8/15/2017**

SIEMENS Bill of Material

Date: 8/15/2017

To: CONSOLIDATED ELECTRICAL DISTRIBUTORS INC
701 COMANCHE RD NE
ALBUQUERQUE, NM 87107
USA

From:
USA

Job Name:	BULK FUELS FACILITY
Quote Name:	BULK FUELS FACILITY
Quote Number:	clinwx00c_08101701_00_00_M00
Distributor:	CONSOLIDATED ELECTRICAL DISTRIBUTORS INC

Line No.	Quantity	Description
20000	1	TYZ:SAFETY_SWITCH--HF364NR Heavy Duty (600 V max), Fusible, Number of Poles:3, Voltage AC Max:600V, Voltage DC Max:250, Max Ampere Rating:200A, With Neutral, Type 3R, Fuse Class- Standard Mounting:CLASS H, K, Fuse Class - Move Load Base:CLASS J, Fuse Class- Need Mounting Kit:CLASS R, T. 1 - HF364NR 1 - HDSS FUS 3P 4W 600V 200A TYPE3R
1000	1	PP-301--SENTRON PWR CTR 1P 10KVA BOLT-ON RP1 Sentron Power Centers, 1 Phase, 10 KVA, 480 Primary Voltage, 240/120 Secondary Voltage, Transformer Core: Aluminum-Wound, 2-5% FCBN Taps, 115C, Encapsulated, Bolt-in Brk. for Pwr. Ctr.(JA), Primary Cir Breaker provided: ED42B035L, Sec Main Cir Breaker Provided: B250H (50A), Max Rating - Sec Branch MCCB: 40 A, Max Sec Ckts 120V 1 IN Wide: (16) 1 POLE, Max Sec Ckts 240v 2 IN Wide: (8) 2 POLE. Catalog No.: US2:1LPC010JA
10	6	Standard Product--BREAKER 20A 1P 120V 10K BL Catalog No.: B120
11	3	Standard Product--BREAKER 15A 1P 120V 10K BL Catalog No.: B115
12	1	Standard Product--SPD2 12 EXT 277/480V 300KA 4XSS SC Catalog No.: US2:TPS3E1230SX02
Non-Siemens Products:		
13	1	20" X 16" X 6" JUNCTION BOX-20166RHC

SIEMENS

Project Name: BULK FUELS FACILITY
Quote #: clinwx00c_08101701_00_00_M00

CONTENTS: HF364NR HDSS FUS 3P 4W 600V 200A TYPE3R

Drawings are for: Approval ☑ Record ☐

Engineer:
Contractor:
Distributor: CONSOLIDATED ELECTRICAL DISTRIBUTORS INC
Date:

Submitted By:
Tel. No.:
Fax No.:

SIEMENS

HF364NR

HDSS FUS 3P 4W 600V 200A TYPE3R

Documents

1.Cut Sheet ,Installation and MTC guide

General Specification

Brand Name	SIEMENS
Type	ENCLOSED/SAFETY SWITCH
Standard	UL
Voltage Rating	600V
Amperage Rating	200A
Wattage	4W

Technical Specification

Number Of Poles	3P
Frequency Rating	60Hz
Action	SINGLE THROW
Material	304SS
Enclosure	TYPE 3R
Mounting	2 OR 3 POINT MOUNTING HOLES
Insulation	NO
Operating Cycles	8000
Operating Temperature	(-20F-120F) AMBIENT TEMPERATURE
Environmental Conditions	OUTDOOR

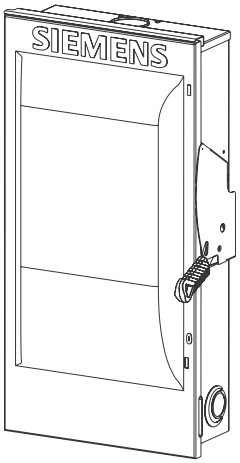

Heavy Duty Safety Switch

Type VBII, 200 Amp, Type 3R (Outdoor)

Standards and Ratings
- UL Listed under file #E4776
- Meets UL98 for switches and UL 50 for enclosures
- Meets NEMA Standard KS-1 for enclosed switches
- Meets NEC wire bending space requirements
- Rated 10,000 AIC with Class H fuses or 200,000 AIC with Class R, T and J fuses
- Rated 100,000 AIC at 600Vdc with Class R or J fuses
- I^2t rated (Amps^2 x Seconds = 2,000,000)
- 12X overload current rating exceeds 10X industry standard
- Suitable for use as service entrance equipment

Features
- Quick-make and break switching action
- Double break visible blade design
- Highly visible ON/OFF indication
- Rugged installer friendly enclosure design
- Modular design allows quick and easy replacement of parts
- Front removable lugs which can easily be converted to copper body or compression type lugs
- Defeatable dual cover interlock

General Information

Catalog Number	Volts	Description	Shipping Weight (lbs.)
HF224NR [1]	240	2 Pole, 3 Wire, Fusible	48
HF324NR	240	3 Pole, 4 Wire, Fusible	50
HF364R	600	3 Pole, 3 Wire, Fusible	49
HF364NR	600	3 Pole, 4 Wire, Fusible	50
HNF364R	600	3 Pole, 3 Wire, Non-Fusible	47

Horsepower Ratings [2 3] - 240 Volts

Catalog Number	1 Phase, 240V AC		3 Phase, 240V AC		250V DC
	Std	Max	Std	Max	
HF224NR	15	—	25	60	40
HF324NR	15	—	25	60	40

Horsepower Ratings [2 3] - 600 Volts

Catalog Number	3 Phase, 480V AC		3 Phase, 600V AC		600V DC
	Std	Max	Std	Max	
HF364R	50	125	60	150	50
HF364NR	50	125	60	150	50
HNF364NR [4]	—	125	—	150	50

Mechanical Lug Wire Ranges (75°C, Cu/Al)

Description	Wire Range
Line, Load, Neutral	#6 AWG - 300 Kcmil
200% and Standard Neutral Ground	#14-1/0AWG
Ground Lug Kit	#14-4 AWG
200% Neutral	(2) #6 AWG - 300 Kcmil

1 These switches are UL Listed for application on grounded B phase systems.
2 Dual horsepower ratings:
Std - applies when non-time delay fuses are installed.
Max - applies when time-delay fuses are installed.
3 Horsepower ratings listed also apply to Design E motors with no derating.
4 Also rated 60 HP on 3phase, 240V AC systems.

Product Specification Sheet HD200.3

Answers for industry.

SIEMENS

Product Specification Sheet #HD200.3 (page 2 of 3)

Accessories

Catalog Number	Description
HA161234	One Normally Open and Closed Auxiliary Switches
HA261234	Two Normally Open and Closed Auxiliary Switches
HA361234	Low Voltage Auxiliary Switch
HG61234	Equipment Ground Lug Kit
HG261234	Isolated Equipment Ground Lug Kit
HN64	Neutral Kit
HN264	200% Neutral Kit
HT24	240 Volt Class T Fuse Clip Kit (1-Pole per kit) (HF224NR, HF324NR)
HT64	600 Volt Class T Fuse Clip Kit (1-Pole per kit) (HF364R, HF364NR)
HR64	Class R Fuse Clip Kit (3 fuse clips per kit) (HF224NR, HF324NR HF364R, HF364NR)
HLC64	Copper Lug Kit (9 lugs per kit)
ECHS200	2.00" Type "HS" Outdoor Hub
ECHS250	2.50" Type "HS" Outdoor Hub

Replacement Parts

Catalog Number	Description
HFB64	Fusible Line Side Replacement Base (HF224NR, HF324NR, HF364R, HF364NR)
HBB64	Fusible Load Side Replacement Base (HF224NR, HF324NR, HF364R, HF364NR)
HNB64	Non-Fusible Replacement Base (HNF364R)
HH64	Replacement Handle/Handle Guard
HL64	Replacement Lugs (3 lugs per kit)
HM64	Replacement Mechanism
[1]	Replacement Door

Compression Lugs

Wire Size	Burndy		Thomas-Betts		Ilsco	
	CU ONLY	CU/AL	CU ONLY	CU/AL	CU ONLY	CU/AL
#2	YA2C-L Box YA2C	YA2CA1	54142-TB	60117	CRB-2 CRB-2L	IACL-2 ACN-2
#1	YA1C-L Box YA1C	YA1CA1	54147 54947BE	60123	CRA-1-38 CRA-1L	ACN-1
1/0	YA25-L Box YA25	YA25A1	54153-TB 54949BE	60129 61130	CRA-0 CRA-1/0L	IACL-1/0 ACN-1/0
2/0	YA26-L3 YA26	YA26A6	54158 256-30695-1229 54910BE	60135 61136	CRA-2/0 CRA-2/0L	ACL-2/0 IACL-2/0
3/0	YA27-L3 YA27	YA27A1	54163-TB	60141 61142	CRC-3/0 CRB-3/0L	IACL-3/0 ACL-3/0
4/0	YA28-L3 YA28-TC38	YA28A1	54168 256-30695-1253	61148 60147	CRC-4/0 CRB-4/0L	IACL-4/0 ACL-4/0
250 Kcmil	YA29-L7		54173 54913BE	61156	CRA-250 CRA-250L	IACL-250
300 Kcmil				61162		

[1] Place "Door" at the end of the switch catalog number.

Product Specification Sheet #HD200.3 (page 3 of 3)

Dimension Drawing

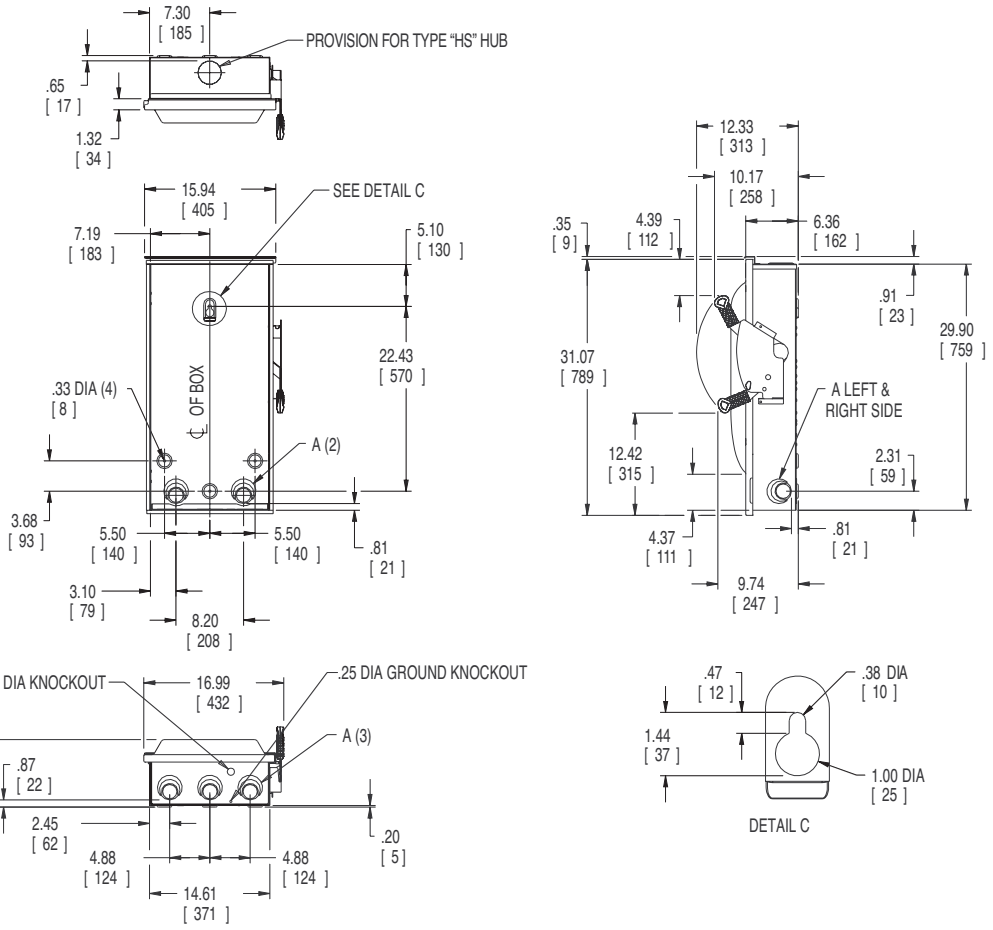

Dimensions shown in inches and millimeters ( ).
Dimension shown accurate to ± ⅛ inch.

KNOCKOUT CODE	CONDUIT SIZE			
A (Tangential)	1.25	1.50	2.00	2.50

	LINE SIDE WIRE BEND	LOAD SIDE WIRE BEND
240V Fused	7.87 (200)	10.34 (263)
600V Fused	7.87 (200)	7.84 (199)
Non-Fused	7.87 (200)	15.84 (402)

Enclosure: Galvanized Steel
.054 (17 Gauge)
Finish: ANSI Grey #61 Paint

Siemens Industry, Inc.
Building Technologies Division
5400 Triangle Parkway
Norcross, GA 30092
1-800-964-4114

Subject to change without prior notice
All rights reserved
Printed in USA
© 2009 Siemens Industry, Inc.

Siemens is a registered trademark of Siemens AG. Product names mentioned may be trademarks or registered trademarks of their respective copanies. Specifications subject to change without notice.

www.usa.siemens.com/switches

SIEMENS

Project Name: BULK FUELS FACILITY
Quote #: clinwx00c_08101701_00_00_M00

CONTENTS: US2:1LPC010JA SENTRON PWR CTR 1P 10KVA BOLT-ON RP1

Drawings are for: Approval ☑ Record ☐

Engineer:
Contractor:
Distributor: CONSOLIDATED ELECTRICAL DISTRIBUTORS INC
Date:

Submitted By:
Tel. No.:
Fax No.:

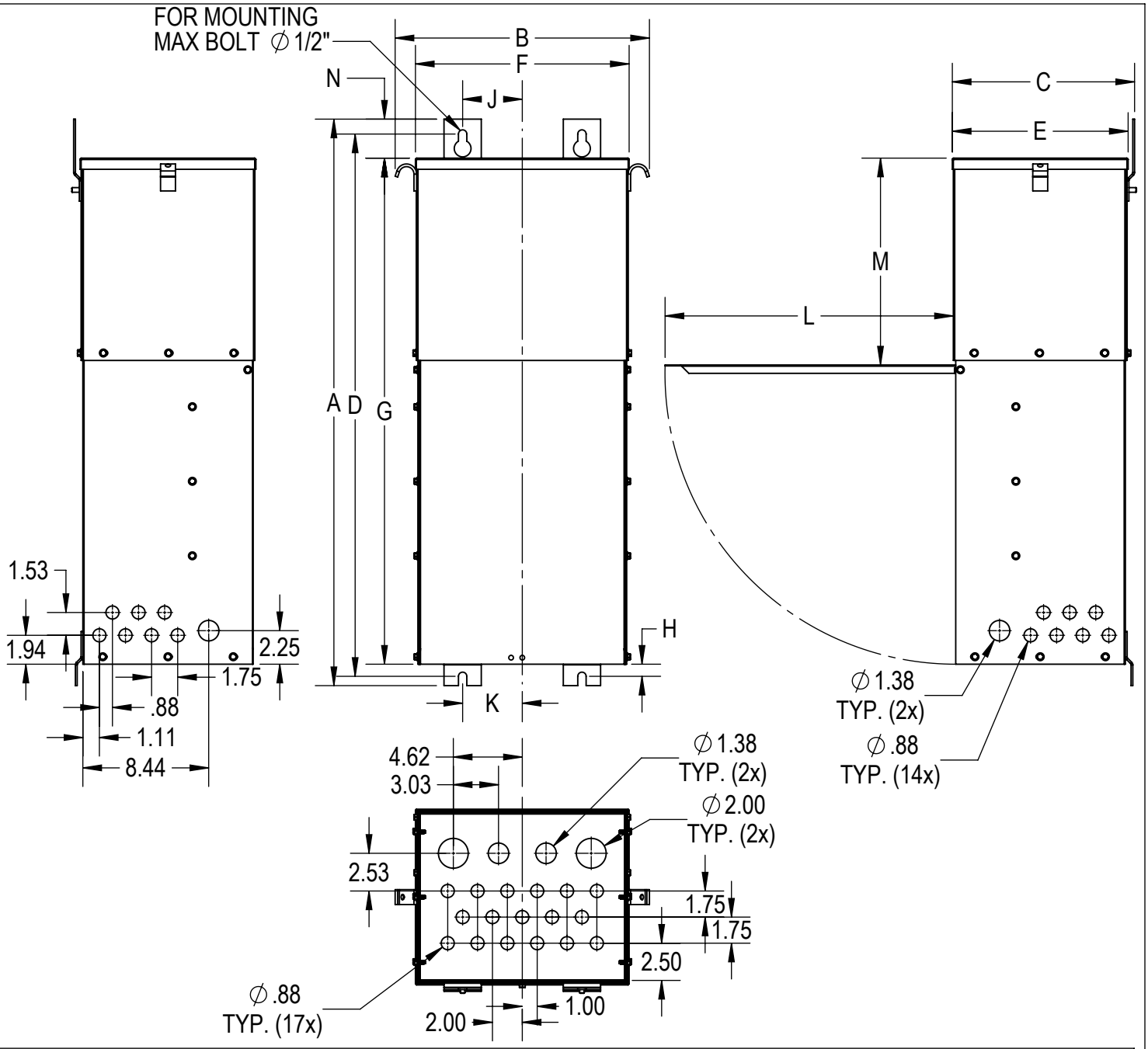

DIMENSION IN INCHES														
KVA	**A MAX**	**B MAX**	**C MAX**	**D**	**E**	**F**	**G**	**H**	**J**	**K**	**L MIN**	**M**	**N**	**WT.**
10	38.00	17.13	12.38	36.38	10.68	14.18	34.00	1.50	4.00	4.00	19.32	13.69	2.63	240

KVA	**PRIMARY MAIN BREAKER**	**SECONDARY MAIN BREAKER**	**VOLTAGE**		**TAPS**
			PRIMARY	**SECONDARY**	
10	35 AMP	50 AMP	480V	240/120	2 x 5% BNFC

	NAME	DATE
DRAWN	AJP	5-9-16
CHECKED	AJP	5-9-16
ENG APPR.	AJP	5-9-16

Confidential - Property of
Siemens Industry, Inc.

A	N/A	5-9-16
REV	**C.N.**	**DATE**

UNLESS OTHERWISE SPECIFIED:
TOLERANCES:
IN
X.XXX ± .005
X.XX ± .02
ANGULAR: ± 2°
DO NOT SCALE DRAWING

SCALE: 1:12

SHEET 1 OF 1

TITLE: SIEMENS
Sentron Power Center
Single Phase 10kVA

SIZE	DWG. NO.	REV
A	1LPC010JA	A

SIEMENS

Project Name: BULK FUELS FACILITY
Quote #: clinwx00c_08101701_00_00_M00

CONTENTS: B120 BREAKER 20A 1P 120V 10K BL

Drawings are for: Approval ☑ Record ☐

Engineer:
Contractor:
Distributor: CONSOLIDATED ELECTRICAL DISTRIBUTORS INC
Date:

Submitted By:
Tel. No.:
Fax No.:

SIEMENS

B120

BREAKER 20A 1P 120V 10K BL

General Specification

Brand Name	SIEMENS
Type	BL
Application	Electrical Distribution
Standard	UL 489

Technical Specification

Voltage Rating	120V
Amperage Rating	20A
Trip Range	Thermal Magnetic
Interrupt Rating	10K AIC
Number Of Poles	1P
Connection	BOLT-ON
Length	3
Width	3
Height	1

SIEMENS

Project Name: BULK FUELS FACILITY
Quote #: clinwx00c_08101701_00_00_M00

CONTENTS: B115 BREAKER 15A 1P 120V 10K BL

Drawings are for: Approval ☑ Record ☐

Engineer:
Contractor:
Distributor: CONSOLIDATED ELECTRICAL DISTRIBUTORS INC
Date:

Submitted By:
Tel. No.:
Fax No.:

SIEMENS

B115

BREAKER 15A 1P 120V 10K BL

General Specification

Brand Name	SIEMENS
Type	BL
Application	Electrical Distribution
Standard	UL 489

Technical Specification

Voltage Rating	120V
Amperage Rating	15A
Trip Range	Thermal Magnetic
Interrupt Rating	10K AIC
Number Of Poles	1P
Connection	BOLT-ON
Length	3
Width	3
Height	1

SIEMENS

Project Name: BULK FUELS FACILITY
Quote #: clinwx00c_08101701_00_00_M00

CONTENTS: US2:TPS3E1230SX02 SPD2 12 EXT 277/480V 300KA 4XSS SC

Drawings are for: Approval ☑ Record ☐

Engineer:
Contractor:
Distributor: CONSOLIDATED ELECTRICAL DISTRIBUTORS INC
Date:

Submitted By:
Tel. No.:
Fax No.:

TPS3 12 and TPS3 L12 (True or Discrete 10-Mode)

TPS3 12 and TPS3 L12 are UL 1449-4 Type 2 and Optional UL 1449 4th Edition surge protective device with a per phase surge current capacity that can be increased to 500 kA (TPS3 L12 up to 450 kA). For mission critical or high profile applications, the TPS3 L12 is our "True" or "Discrete" 10-mode style SPD providing the "Just in Case" assurance of directly connected L-L MOVs.

Both TPS3 12 and TPS3 L12 are UL 1283 Listed incorporating EMI/RFI or Sine Wave tracking filtering designed to condition low energy L-N coupled noise. When installed at the electrical service entrance, it can be used for UL 96A compliance (@ 20 kA In).

Standard monitoring includes protection status indication LEDs, audible alarm, and dry contacts. Complete protection is intact when the status indicators are illuminated. When protection is lost, the status indicator will extinguish, the red service light will illuminate, and the dry contacts will change state. An optional surge counter is available.

A new diagnostic feature integrated within the TPS3 12 and TPS3 L12 is Ground Integrity Monitoring or (GIM) diagnostic indication circuit. Ground Integrity Monitoring or (GIM) diagnostics monitors the health of the electrical system's neutral to ground bond. If voltage is seen across neutral and ground, the phase indicators will remain illuminated, while the red service light begins to flash alerting the end user that the electrical system grounding needs to be checked and serviced. This feature can be remotely monitored via the dry contact outputs. Siemens TPS3s are one of the first in the industry to offer this power quality safety and performance indication.

TPS3 12 and TPS3 L12 Key Features

- UL 1449-4 Type 2 SPD and UL 1283 Listed
  - Optional UL 1449 4th Edition Listed Type 1
- Type 1 / Type 2 SPD
- TPS3 12: 100 – 500 kA Per Phase Surge Current
- TPS3 L12: 150, 300, 450 kA Phase Surge Current
- 20 kA I_n (Most models)
- 200 kA SCCR (Most models)
- UL 96A Lightning Protection Master Labeling compliant (@ 20 kA)
- Every MOV is monitored, including N-G
- Mounts external to electrical distribution equipment
  - Recommended for line side or load side applications
- Standard NEMA 1/12/3R/04 ANSI 61 steel enclosure
- TPS3 12 Modes of Protection – L-N, L-G, N-G, and L-L
- TPS3 L12 Modes of Protection – L-N, L-G, N-G, and L-L (directly connected L-L elements)
- Standard Monitoring:
  - LED Indicators
  - Ground Integrity Monitoring diagnostics
  - Dry Contacts
  - Audible alarm with silence switch and test button
- Wire size: #8 AWG to 1/0
- Dimensions: 12" x 12" x 7" (305 mm x 305 mm x 178 mm)③
- Weight: 20 lb. (9.07 kg)③
- 10 Year Product Warranty

Available Options:

- Internal rotary disconnect
- Thru-door disconnect

TPS3 12

Ordering Information

Catalog # TPS3 ☐ 12 ☐☐ ☐ ☐☐☐

Voltage Code

A = 120/240 V, 1Ø, 3W
B = 120/240 V, 3Ø, 4W
C = 120/208 V, 3Ø, 4W
D = 240 V, 3Ø, 3W①
E = 277/480 V, 3Ø, 4W
F = 480 V, 3Ø, 3W①
G = 600 V, 3Ø, 3W②
K = 380/220 V, 3Ø, 4W
L = 600/347 V, 3Ø, 4W
S = 400/230 V, 3Ø, 4W

Surge Current (kA)

10 = 100 kA per phase
15 = 150 kA per phase
20 = 200 kA per phase
25 = 250 kA per phase
30 = 300 kA per phase
40 = 400 kA per phase
50 = 500 kA per phase

Enclosure

0 = Standard NEMA 1/12/3R/4 Steel
V = NEMA 4X non-metallic
S = NEMA 4X stainless steel
F = NEMA 1 flush mount
P = NEMA 1 screwcover pullbox with extended display on 6ft cable for line side mounting in SWBD/SWGR

Options

2 = Type 2 SPD (Default) Includes UL 1283 EMI/RFI Filters
0 = Type 1 SD (Consult Factory Prior to Ordering)
D = Internal rotary disconnect
T = Thru-door disconnect
X = Surge Counter (Standard)

Example: **TPS3C12100XD2** = Type 2 SPD (Default) for a 208/120V application with a surge current capacity of 100kA per phase, in a standard NEMA 1/12/3R/4 enclosure with a surge counter and internal rotary disconnect option.

When option **X**, **T**, or **D** are NOT selected, include a **zero** (**0**) in the field.

Available Accessories: Ordered Separately

RMSIE = Remote monitor
① Not available in 500 kA
② Available in 100 kA, 150 kA, 200 kA & 250 kA only

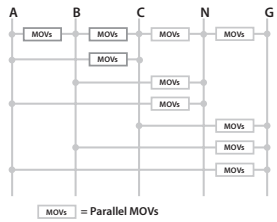

"True" or "Discrete" 10-Mode SPD

TPS3 L12

Ordering Information

Catalog # TPS3 ☐ L12 ☐☐ ☐ ☐☐☐

Voltage Code

A = 120/240 V, 1Ø, 3W
B = 120/240 V, 3Ø, 4W
C = 120/208 V, 3Ø, 4W
E = 277/480 V, 3Ø, 4W
K = 380/220 V, 3Ø, 4W
S = 400/230 V, 3Ø, 4W

Surge Current (kA)

15 = 150 kA per phase
30 = 300 kA per phase
45 = 450 kA per phase

Enclosure

0 = Standard NEMA 1/12/3R/4 Steel
V = NEMA 4X non-metallic
S = NEMA 4X stainless steel
F = NEMA 1 flush mount
P = NEMA 1 screwcover pullbox with extended display on 6ft cable for line side mounting in SWBD/SWGR

Options

2 = Type 2 SPD (Default) Includes UL 1283 EMI/RFI Filters
0 = Type 1 SD (Consult Factory Prior to Ordering)
D = Internal rotary disconnect
T = Thru-door disconnect
X = Surge Counter (Standard)

Example: **TPS3CL12150XD2** = 10 Mode, Type 2 SPD (Default) for a 208/120V application with a surge current capacity of 150kA per phase, in a standard NEMA 1/12/3R/4 enclosure with a surge counter and internal rotary disconnect option.

When an option is NOT selected, include a **zero** (**0**) in the field.

Available Accessories: Ordered Separately

RMSIE = Remote monitor

③ Internal disconnect options and other NEMA ratings may increase enclosure size and weight

JUNCTION BOX

Panel Enclosures
Type 3R Large Continuous Hinge Cover
Data Sheet and Catalog Number

Application
- Used as wiring boxes, junction and pull boxes
- Protects against falling rain, sleet and external ice formation

Standards
- UL 50 listed, Type 3R
- CSA C22.2 No. 40 certified, Type 3R
- Conforms to NEMA standard for Type 3R

Construction
- Enclosure and door are fabricated from code gauge galvaneal steel, (see below)
- Enclosure standard without knockouts
- Door is secured to the body with a continuous hinge and stainless steel pin on one side and captive screws on the opposite side
- Door has padlock hasp with sealing hole provision
- .375-16 collar studs are furnished for mounting optional panel
- External mounting feet are provided for secure wall mounting
- Ground stud provided on door

Finish
- Wash and phosphate undercoat
- ANSI 61 gray polyester powder finish

Accessories
- Panels
- Touch-up paint
- See Accessories section

Discount Schedule: A2

Subclass: AU0

Enclosure	Enclosure Size Height x Width x Depth A x B x C		D			Panel	Panel Size	
Catalog Number	in.	mm	in.	mm	Gauge	Catalog Number	Height x Width in.	mm
16126RHC	16.00 x 12.00 x 6.00	406 x 305 x 152	5.00	127	16	N1612P	13.00 x 9.00	330 x 229
16166RHC	16.00 x 16.00 x 6.00	406 x 406 x 152	9.00	229	16	N1616P	13.00 x 13.00	330 x 330
18186RHC	18.00 x 18.00 x 6.00	457 x 457 x 152	13.00	330	16	N1818P	15.00 x 15.00	381 x 381
181810RHC	18.00 x 18.00 x 10.00	457 x 457 x 254	13.00	330	16	N1818P	15.00 x 15.00	381 x 381
20166RHC	20.00 x 16.00 x 6.00	508 x 406 x 152	9.00	229	16	N2016P	17.00 x 13.00	432 x 330
20208RHC	20.00 x 20.00 x 8.00	508 x 508 x 203	13.00	330	16	N2020P	17.00 x 17.00	432 x 432
24208RHC	24.00 x 20.00 x 8.00	610 x 508 x 203	13.00	330	16	N2420P	20.87 x 16.87	530 x 428
24248RHC	24.00 x 24.00 x 8.00	610 x 610 x 203	17.00	432	14	N2424P	20.87 x 20.87	530 x 530
242410RHC	24.00 x 24.00 x 10.00	610 x 610 x 254	17.00	432	14	N2424P	20.87 x 20.87	530 x 530
30248RHC	30.00 x 24.00 x 8.00	762 x 610 x 203	17.00	432	14	N3024P	26.87 x 20.87	682 x 530
302410RHC	30.00 x 24.00 x 10.00	762 x 610 x 254	17.00	432	14	N3024P	26.87 x 20.87	682 x 530
30308RHC	30.00 x 30.00 x 8.00	762 x 762 x 203	17.00	432	14	N3030P	26.87 x 26.87	682 x 682
303012RHC	30.00 x 30.00 x 12.00	762 x 762 x 305	27.00	432	14	N3030P	26.87 x 26.87	682 x 682
303016RHC	30.00 x 30.00 x 16.00	762 x 762 x 406	27.00	432	14	N3030P	26.87 x 26.87	682 x 682
362412RHC	36.00 x 24.00 x 12.00	914 x 610 x 305	17.00	432	14	N3624P	32.87 x 20.87	835 x 530
363012RHC	36.00 x 30.00 x 12.00	914 x 762 x 305	27.00	432	14	N3630P	32.87 x 26.87	835 x 682
363610RHC	36.00 x 36.00 x 10.00	914 x 914 x 254	27.00	432	14	N3636P	32.87 x 32.87	835 x 835
363612RHC	36.00 x 36.00 x 12.00	914 x 914 x 305	27.00	432	14	N3636P	32.87 x 32.87	835 x 835
423012RHC	42.00 x 30.00 x 12.00	1067 x 762 x 305	27.00	432	14	N4230P	38.87 x 26.87	987 x 682
423612RHC	42.00 x 36.00 x 12.00	1067 x 914 x 305	27.00	432	14	N4236P	38.87 x 32.87	987 x 835
483612RHC	48.00 x 36.00 x 12.00	1219 x 914 x 305	27.00	432	14	N4836P	44.87 x 32.87	1140 x 835
483616RHC	48.00 x 36.00 x 16.00	1219 x 914 x 406	27.00	432	14	N4836P	44.87 x 32.87	1140 x 835
603612RHC	60.00 x 36.00 x 12.00	1524 x 914 x 305	27.00	432	14	N6036P	56.87 x 32.87	1444 x 835

Notes: We can provide special sizes, finishes and other modifications. Consult the factory for your special requirements. Dimensions are in inches. Millimeters shown are for reference only. Data subject to change without notice.

Panel Enclosures
Type 3R Large Continuous Hinge Cover
Illustration Sheet

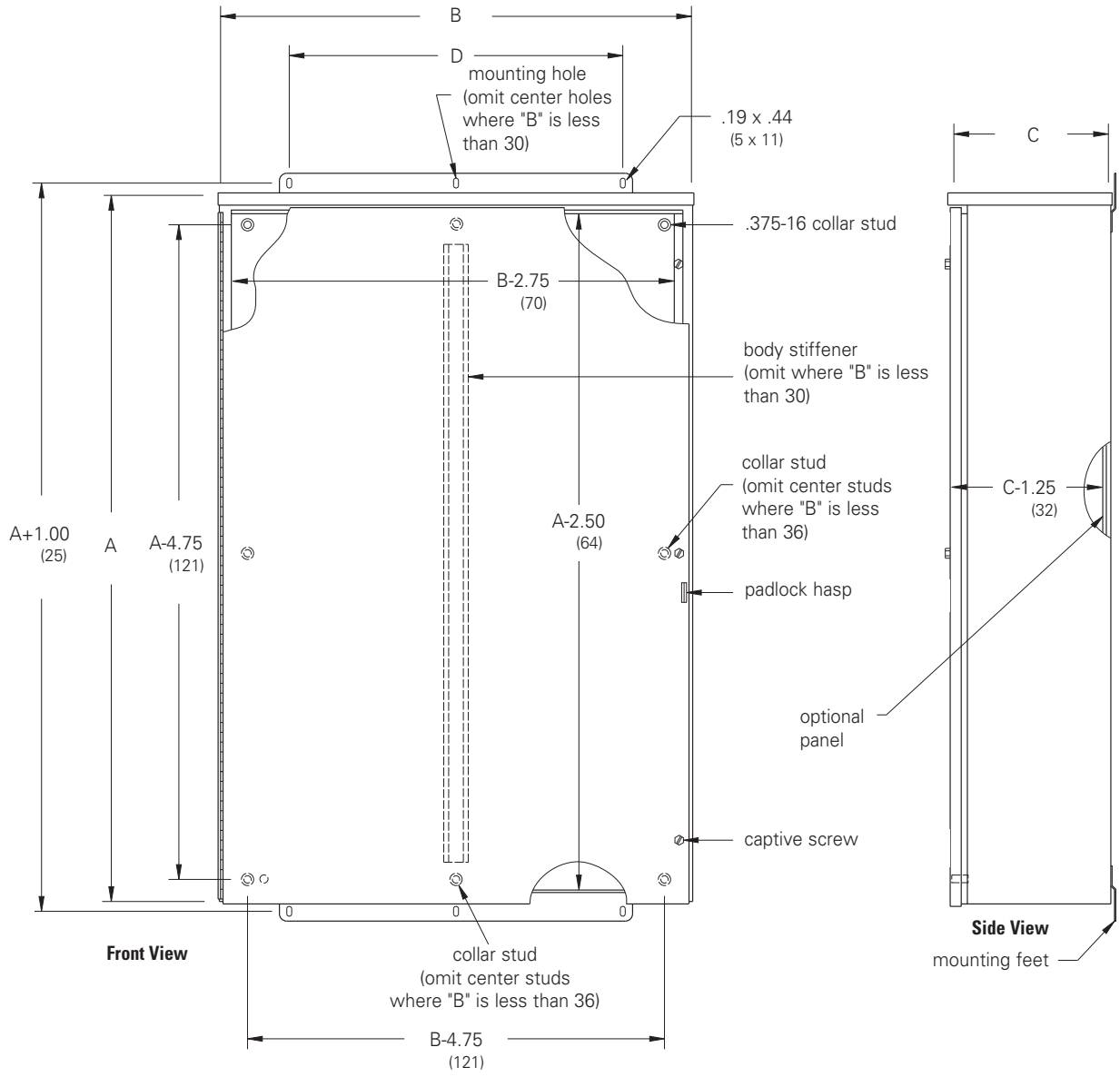

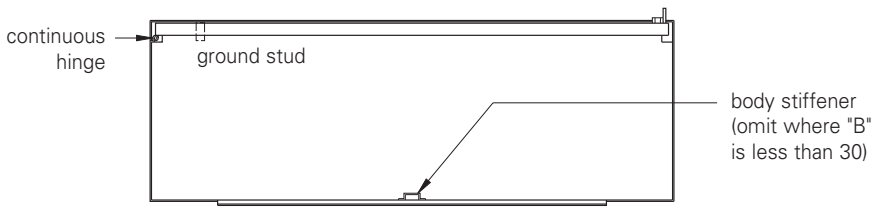

Bottom View

Notes: Dimensions are in inches. Millimeters shown are for reference only. Data subject to change without notice.

DEPARTMENT OF THE ARMY
ALBUQUERQUE DISTRICT, CORPS OF ENGINEERS
ALBUQERQUE DISTRICT OFFICE
4101 JEFFERSON PLAZA NE
ALBUQUERQUE, NM 87109

SUBMITTAL REVIEW VERIFICATION SHEET

PROJECT TITLE: Kirtland BFF Mid-Plume Pump and Treat System Expansion
CONTRACT NUMBER: W912DR-12-D-0006 DM01
DATE RECEIVED: 10-09-2017
DATE REVIEWED: 10-10-2017

DESCRIPTION OF ITEMS REVIEWED:

1. EATON Cooper Transformer

NO EXCEPTIONS TAKEN.	**X**
EXCEPTIONS AS NOTED ON DRAWINGS AND/OR ATTACHED SHEETS(S). RESUBMISSION NOT REQUIRED.	
EXCEPTIONS AS NOTED ON DRAWINGS AND/OR ATTACHED SHEETS(S). RESUBMISSION REQUIRED.	
RECEIPT ACKKNOWLEDGED.	

Notes:

(EA submittal review sheet lists transformer manufacturer as Siemens)

NOTE: ITEMS REVIEWED AS TO GENERAL LAYOUT ONLY. DIMENSIONS AND QUANTITIES NOT CHECKED. REVIEW DOES NOT RELIEVE CONTRACTOR OF RESPONSIBILITIES FOR ANY ERRORS WHICH MAY EXIST AS CONTRACTOR SHALL BE RESPONSIBLE FOR DIMENSIONS AND DESIGN OF ADEQUATE CORRECTIONS, DETAILS AND SATISFACTORY CONSTRUCTION OF WORK.

SIGNATURE SANCHEZ.AMY.ELIZABETH.1454434338 Digitally signed by SANCHEZ.AMY.ELIZABETH.1454434338 DN: c=US, o=U.S. Government, ou=DoD, ou=PKI, ou=USA, cn=SANCHEZ.AMY.ELIZABETH.1454434338 Date: 2017.10.10 14:41:15 -06'00' **DATE** 10/10/2017

EA Engineering, Science, and Technology, Inc., PBC

Submittal Review Sheet 1

Project Name: **Kirtland BFF Mid-Plume Pump and Treat System Expansion**				Date Received: **10/9/2017**
Project Owner: **Kirtland Air Force Base**				Checked By: **Tyler Curley**
Contractor: **Wilson Electric**	Engineer: **EA Engineering, Science and Technology, Inc., PBC.**			Log Page: **NA**
Address: **501 General Somervell SE # B** **Albuquerque, NM 87123**	Address: **320 Gold Ave. SW, Suite 1300** **Albuquerque, NM 87102**			EA No.: 62599DM01
				Spec. Section: **NA**
				Drawing/Detail No.: **E-000/E-001**
ATTN: Matthew Walstrom	ATTN: **Devon Jercinovic**	1st Sub		Re-Sub
Date Transmitted: **10/9/2017**	Prev. Transmittal Date: **08/15/17**			

Item No.	No. Copies	Description	Manufacturer	Mfg/Vendor Dwg or Detail	Action Taken*
1	1	Transformer	Siemens		**A**

The Action Designated Above is in Accordance with the Following Legend:

A – Furnish as Submitted
B – Furnish as Noted
C – Revise and Re-submit
1. Not enough information for review.
2. No reproducible submitted.
3. Copies illegible.
4. Not enough copies submitted.
5. Wrong sequence number.
6. Wrong resubmittal number.
7. Wrong Spec. Section.
8. Wrong form used.
9. See Comments.

D – Rejected
E – Engineer's Review not Required
1. Submittal not required.
2. Supplemental Information. Submittal retained for Information purposes only.
3. Information reviewed and approved on prior submittal.
4. See Comments.

Review is for general compliance with Contract Documents. No responsibility is assumed for correctness of dimensions or detail. Contractor is required to specify deviations from contract requirements. Lack of exceptions noted by Engineer does not waive Contractor's obligation to comply with Drawings and Specifications.

Comments:
Items reviewed and confirmed to meet requirements
(Reviewed Material in Parentheses)
Issues in Bold

Please see transformer specifications.

By: _____ Date: 10/9//17

Distribution: [1] Contractor [1] Engineer [1] Owner

ITE	DESCRIPTION
1	Bolted Cover w/ Handhole w/ Nutguard
2	Cooper Bayonet Fusing w/ Dripshield
3	Current Limiting Backup Fuses (Internal)
4	Drain Valve with Sampler
5	Ground Nut .50-13 Tap
6	Ground Strap and Nut
7	9.0kV (7.65kV MCOV) Elbow Arrester (boxed)
8	High Security Cabinet w/ Pentahead Door Bolts
9	35kV 200 Amp HV Bushing Well w/ 15kV Insert
10	Lifting Lug
11	Liquid Temperature Gauge
12	1.2kV LV Bushing w/4 Hole Spade
13	Magnetic Oil Level Gauge
14	Nameplate
15	One Inch Upper Press. Conn. and Fill Plug
16	Two Position Loadbreak Switch
17	Parking Stand
18	Pressure Relief Valve
19	Pressure Vacuum Gauge
20	Schrader Valve
21	Tank Base w/ Jacking and Rolling Facilities
22	5-Position Tap Changer
23	X0 Bushing

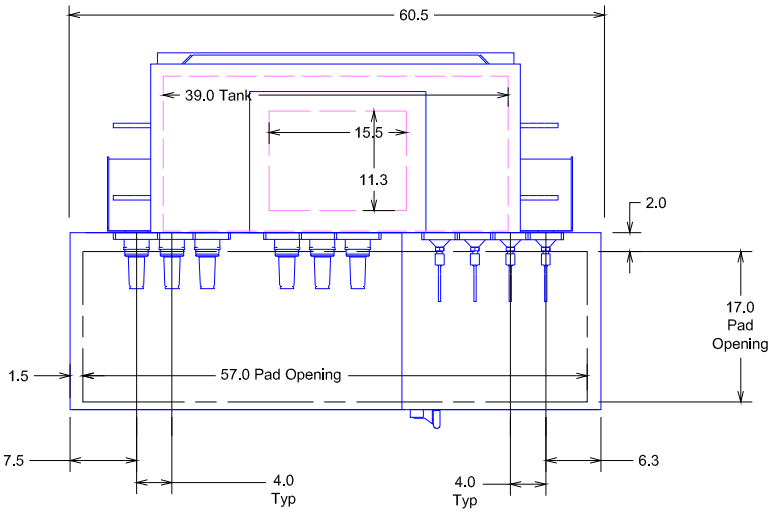

Cabinet Removed

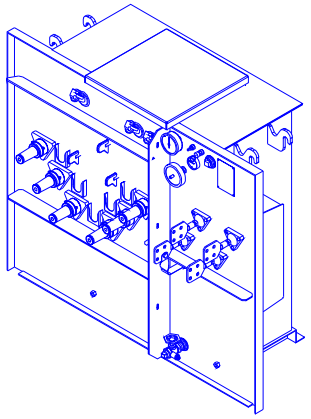

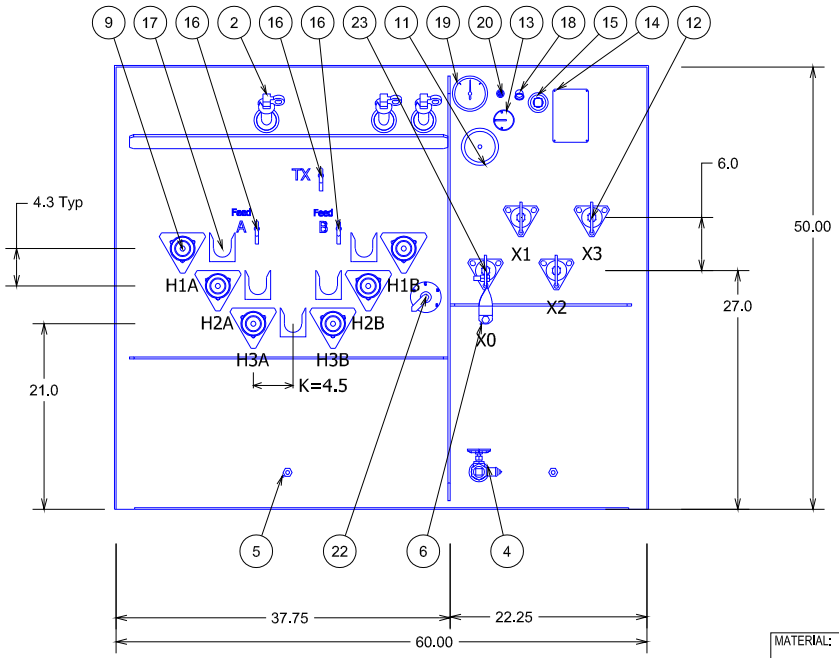

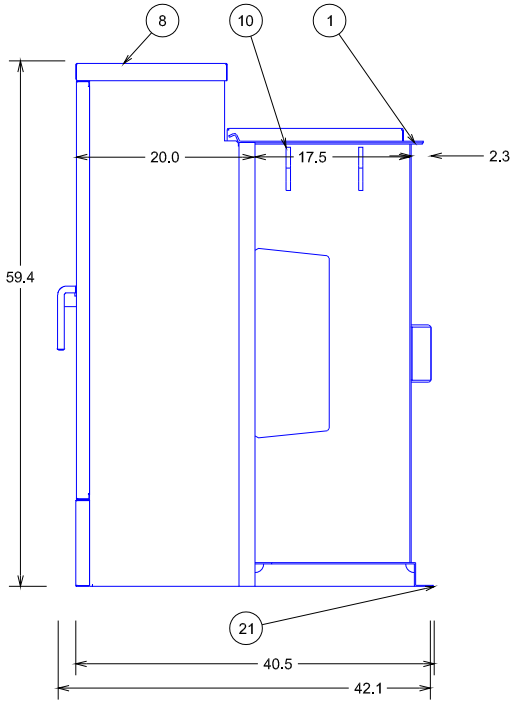

3PH Padmount Transformer 60Hz
75.0 kVA KNAN 65 AWR FR3
HV 12470D 95 kV BIL
LV 480Y/277 30 kV BIL
3.89 %IZ
Special Topcoat Sherwin Williams Sand Dollar #6099
Mild Steel Construction
UL Listed

2ND NamePlate Outside LV Door

SO	212171077
PO	5501547574
Customer Name	BORDER STATES ELECTRIC SUPPLY ALB
Project Name	KAFB

MATERIAL:

ALL DIMENSIONS ARE IN INCHES [MM]

THE INFORMATION ON THIS DOCUMENT WAS CREATED BY EATON. IT WAS DISCLOSED IN CONFIDENCE AND IS ONLY TO BE USED FOR THE PURPOSE IN WHICH IT WAS SUPPLIED.

THIS DRAWING HAS BEEN GENERATED FROM A 3D MODEL.

EATON
Powering Business Worldwide

TITLE: Distribution Transformer Outline Drawing

DESC: **COOPER POWER SERIES** THREE-PHASE PAD-MOUNTED COMPARTMENTAL TYPE

DWG:	DATE:	REF:	SHEET #:	SCALE:	REV:
PTP	10/4/2017	P3D V03R08M06	1 OF 1		00

00028P06XRXA

00028P06XRXA
REVISIONS

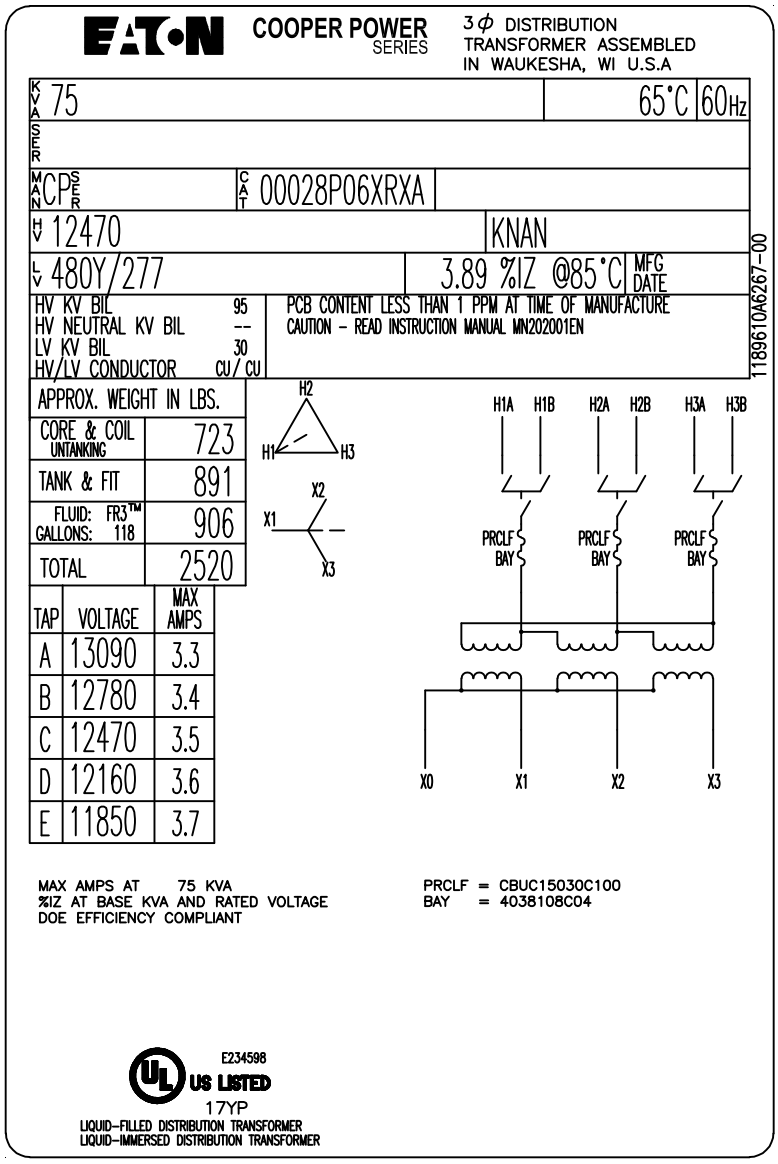

NOTES: **1) ACTUAL PLATE IS A NEGATIVE OF THE ABOVE DRAWING.**
2) ACTUAL %IZ TO BE STAMPED IN AFTER TESTING.

NAMEPLATE MATERIAL: ALUMINUM

212171077,11

1189610A6267 REVISIONS

MATERIAL:

ALL DIMENSIONS ARE IN INCHES [MM]

THE INFORMATION ON THIS DOCUMENT WAS CREATED BY EATON. IT WAS DISCLOSED IN CONFIDENCE AND IS ONLY TO BE USED FOR THE PURPOSE IN WHICH IT WAS SUPPLIED.

Powering Business Worldwide

TITLE: LASER NAMEPLATE

DESC: **COOPER POWER SERIES** 00028P06XRXA

DWG:	DATE:	REF:	SHEET #:	SCALE:	REV:
PTP	10/6/2017		1 of 1	1=1	00

1189610A6267

Three-phase pad-mounted compartmental type transformer

General

At Eaton, we are constantly striving to introduce new innovations to the transformer industry, bringing you the highest quality, most reliable transformers. Eaton's Cooper Power series Transformer Products are ISO 9001 compliant, emphasizing process improvement in all phases of design, manufacture, and testing. In order to drive this innovation, we have invested both time and money in the Thomas A. Edison Technical Center, our premier research facility in Franksville, Wisconsin. Such revolutionary products as distribution-class UltraSIL™ Polymer-Housed Evolution™ surge arresters and Envirotemp™ FR3™ fluid have been developed at our Franksville lab.

With transformer sizes ranging from 45 kVA to 12 MVA and high voltages ranging from 2400 V to 46 kV, Eaton has you covered. From fabrication of the tanks and cabinets to winding of the cores and coils, to production of arresters, switches, tap changers, expulsion fuses, current limit fuses, bushings (live and dead) and molded rubber goods, Eaton does it all. Eaton's Cooper Power series transformers are available with electrical grade mineral oil or Envirotemp™ FR3™ fluid, a less-flammable and bio-degradable fluid. Electrical codes recognize the advantages of using Envirotemp™ FR3™ fluid both indoors and outdoors for fire sensitive applications. The bio-based fluid meets Occupational Safety and Health Administration (OSHA) and Section 450.23 NEC Requirements.

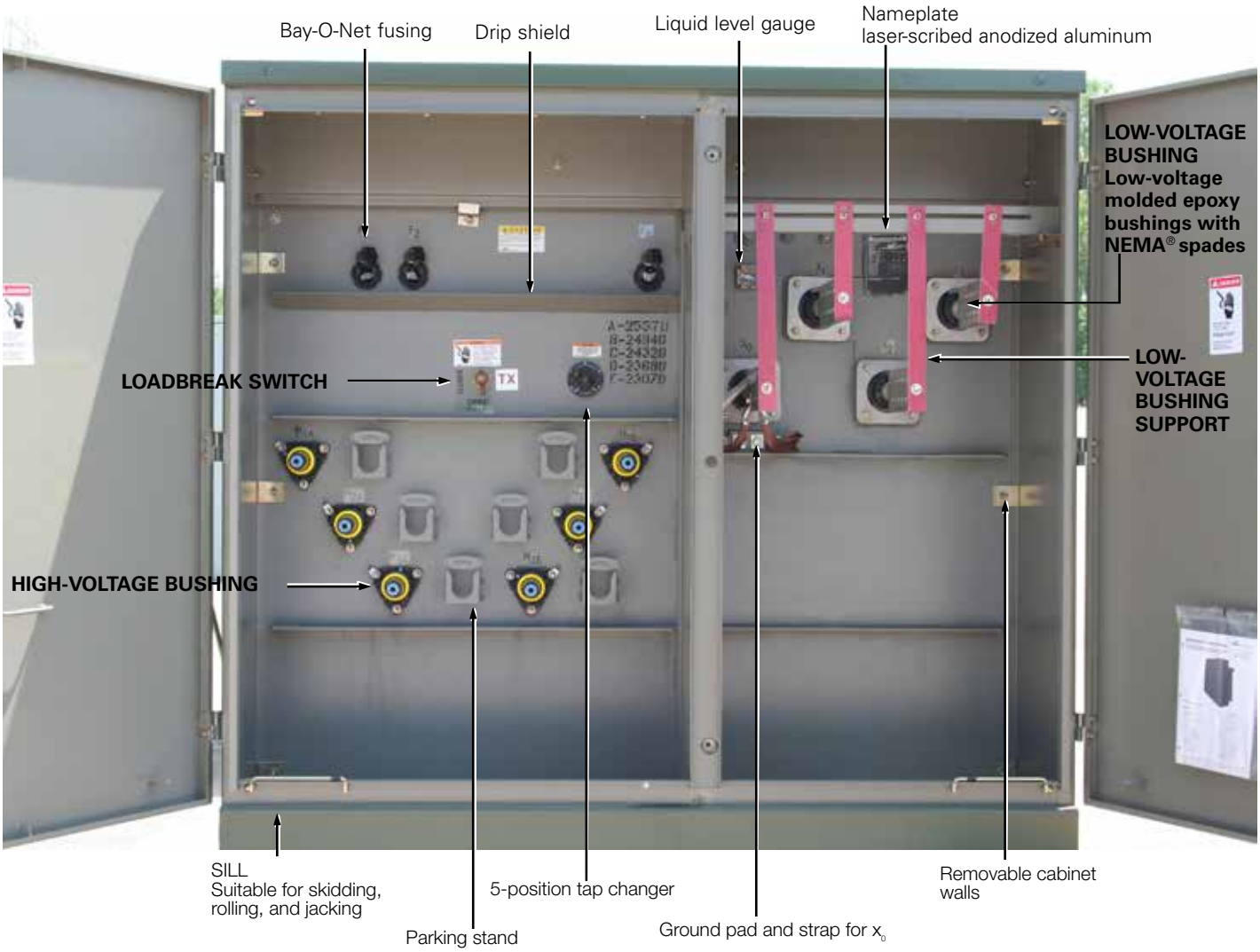

Figure 1. Three-phase pad-mounted compartmental type transformer.

Table 1. Product Scope

Type	Three Phase, 50 or 60 Hz, 65 °C Rise (55 °C, 55/65 °C), 65/75 °C, 75 °C
Fluid Type	Mineral oil or Envirotemp™ FR3™ fluid
Coil Configuration	2-winding or 4-winding or 3-winding (Low-High-Low), 3-winding (Low-Low-High)
Size	45 – 10,000 kVA
Primary Voltage	2,400 – 46,000 V
Secondary Voltage	208Y/120 V to 14,400 V
Specialty Designs	Inverter/Rectifier Bridge
	K-Factor (up to K-19)
	Vacuum Fault Interrupter (VFI)
	UL® Listed & Labeled and Classified
	Factory Mutual (FM) Approved®
	Solar/Wind Designs
	Differential Protection
	Seismic Applications (including OSHPD)
	Hardened Data Center

Table 2. Three-Phase Ratings

Three-Phase 50 or 60 Hz
kVA Available[1]:
45, 75, 112.5, 150, 225, 300, 500, 750, 1000, 1500, 2000, 2500, 3000, 3750, 5000, 7500, 10000

[1]Transformers are available in the standard ratings and configurations shown or can be customized to meet specific needs.

Table 3. Impedance Voltage

	Low-voltage rating		
Rating (kVA)	**≤ 600 V**	**2400 Δ through 4800 Δ**	**6900 Δ through 13800GY/7970 or 13800 Δ**
45-75	2.70-5.75	2.70-5.75	2.70-5.75
112.5-300	3.10-5.75	3.10-5.75	3.10-5.75
500	4.35-5.75	4.35-5.75	4.35-5.75
750-2500	5.75	5.75	5.75
3750	5.75	5.75	6.00
5000		6.00	6.50

Note: The standard tolerance is ± 7.5%

Table 4. Audible Sound Levels

	NEMA® TR-1 Average
Self-Cooled, Two Winding kVA Rating	**Decibels (dB)**
45-500	56
501-700	57
701-1000	58
1001-1500	60
1501-2000	61
2001-2500	62
2501-3000	63
3001-4000	64
4001-5000	65
5001-6000	66
6001-7500	67
7501-10000	68

Table 5. Insulation Test Levels

KV Class	Induced Test 180 or 400 Hz 7200 Cycle	kV BIL Distribution	Applied Test 60 Hz (kV)
1.2	Twice Rated Voltage	30	10
2.5		45	15
5		60	19
8.7		75	26
15		95	34
25		125	40
34.5		150	50

Table 6. Temperature Rise Ratings 0-3300 Feet (0-1000 meters)

	Standard	Optional
Unit Rating (Temperature Rise Winding)	65 °C	55 °C, 55/65 °C, 75 °C
Ambient Temperature Max	40 °C	50 °C
Ambient Temperature 24 Hour Average	30 °C	40 °C
Temperature Rise Hotspot	80 °C	65 °C

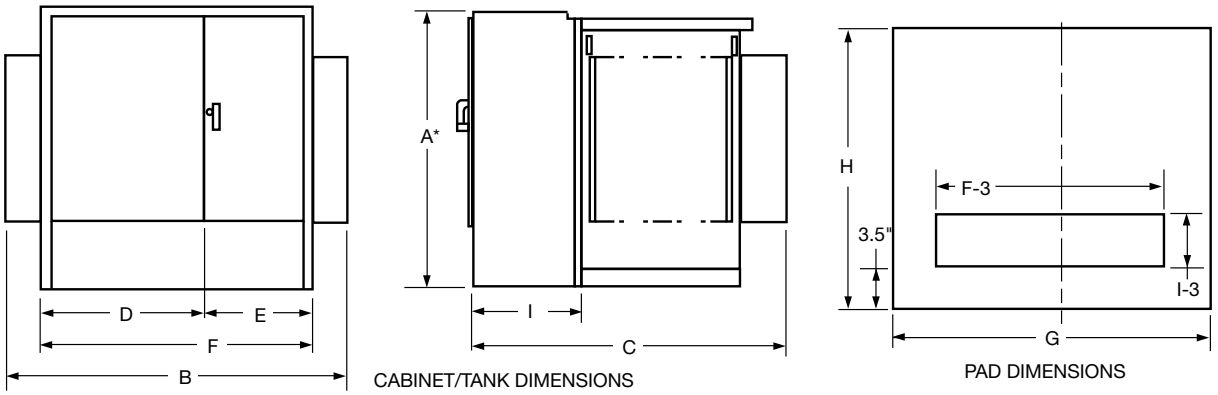

Figure 2. Transformer and pad dimensions.

* Add 9" for Bay-O-Net fusing.

Table 7. Fluid-filled—aluminum windings 55/65 °C Rise[1]

65° Rise	DEAD-FRONT—LOOP OR RADIAL FEED—BAY-O-NET FUSING OIL FILLED—ALUMINUM WINDINGS										
	OUTLINE DIMENSIONS (in.)									Gallons of Fluid	Approx. Total Weight (lbs.)
kVA Rating	A*	B	C	D	E	F	G	H	I		
45	50	68	39	42	26	68	72	43	20	110	2,100
75	50	68	39	42	26	68	72	43	20	115	2,250
112.5	50	68	49	42	26	68	72	53	20	120	2,350
150	50	68	49	42	26	68	72	53	20	125	2,700
225	50	72	51	42	30	72	76	55	20	140	3,150
300	50	72	51	42	30	72	76	55	20	160	3,650
500	50	89	53	42	30	72	93	57	20	190	4,650
750	64	89	57	42	30	72	93	61	20	270	6,500
1000	64	89	59	42	30	72	93	63	20	350	8,200
1500	73	89	86	42	30	72	93	90	24	410	10,300
2000	73	72	87	42	30	72	76	91	24	490	12,500
2500	73	72	99	42	30	72	76	103	24	530	14,500
3000	73	84	99	46	37	84	88	103	24	620	16,700
3750	84	85	108	47	38	85	88	112	24	660	19,300
5000	84	96	108	48	48	96	100	112	24	930	25,000
7500	94	102	122	54	48	102	100	126	24	1,580	41,900

1 Weights, gallons of fluid, and dimensions are for reference only and not for construction. Please contact Eaton for exact dimensions.

* Add 9" for Bay-O-Net fusing.

Table 8. Fluid-Filled—Copper Windings 55/65 °C Rise[1]

65° Rise	DEAD-FRONT—LOOP OR RADIAL FEED—BAY-O-NET FUSING OIL FILLED—COPPER WINDINGS										
	OUTLINE DIMENSIONS (in.)									Gallons of Fluid	Approx. Total Weight (lbs.)
kVA Rating	A*	B	C	D	E	F	G	H	I		
45	50	64	39	34	30	64	69	43	20	110	2,100
75	50	64	39	34	30	64	69	43	20	115	2,350
112.5	50	64	49	34	30	64	69	53	20	115	2,500
150	50	64	49	34	30	64	69	53	20	120	2,700
225	50	64	51	34	30	64	73	55	20	140	3,250
300	50	64	51	34	30	64	75	55	20	160	3,800
500	50	81	53	34	30	64	85	57	20	200	4,800
750	64	89	57	42	30	72	93	61	20	255	6,500
1000	64	89	59	42	30	72	93	63	20	300	7,800
1500	73	89	86	42	30	72	93	90	24	410	10,300
2000	73	72	87	42	30	72	76	91	24	420	11,600
2500	73	72	99	42	30	72	76	103	24	500	14,000
3000	73	84	99	46	37	84	88	103	24	720	18,700
3750	84	85	108	47	38	85	88	112	24	800	20,500
5000	84	96	108	48	48	96	100	112	24	850	25,000
7500	94	102	122	54	48	102	100	126	24	1,620	46,900

[1] Weights, gallons of fluid, and dimensions are for reference only and not for construction. Please contact Eaton for exact dimensions.

* Add 9" for Bay-O-Net fusing.

Standard features

Connections and neutral configurations

- Delta - Wye: Low voltage neutral shall be a fully insulated X0 bushing with removable ground strap.
- Grounded Wye-Wye: High voltage neutral shall be internally tied to the low voltage neutral and brought out as the H0X0 bushing in the secondary compartment with a removable ground strap.
- Delta-Delta: Transformer shall be provided without a neutral bushing.
- Wye-Wye: High voltage neutral shall be brought out as the H0 bushing in the primary compartment and the low voltage neutral shall be brought as the X0- bushing in the secondary compartment.
- Wye-Delta: High voltage neutral shall be brought out as the H0 bushing in the primary compartment. No ground strap shall be provided (line to line rated fusing is required).

High and low voltage bushings

- 200 A bushing wells (15, 25, and 35 kV)
- 200 A, 35 kV Large Interface
- 600 A (15, 25, and 35 kV) Integral bushings (dead-front)
- Electrical-grade wet-process porcelain bushings (live-front)

Tank/cabinet features

- Bolted cover for tank access (45-2500 kVA)
- Welded cover with hand hole (>2500 kVA)
- Three-point latching door for security
- Removable sill for easy installation
- Lifting lugs (4)
- Stainless steel cabinet hinges and mounting studs
- Steel divider between HV and LV compartment
- 20" Deep cabinet (45-1000 kVA)
- 24" Deep cabinet (1500-7500 kVA)
- 30" Deep cabinet (34.5/19.92 kV)
- Pentahead captive bolt
- Stainless steel 1-hole ground pads (45-500 kVA)
- Stainless steel 2-hole ground pads (750-10,000 kVA)
- Parking Stands (dead-front)

Valves/plugs

- One-inch upper filling plug
- One-inch drain plug (45-500 kVA)
- One-inch combination drain valve with sampling device in low voltage compartment (750-10,000 kVA)
- Automatic pressure relief valve

Nameplate

- Laser-scribed anodized aluminum nameplate

Figure 3. Drain valve with sampler.

Figure 4. Automatic Pressure relief valve.

Figure 5. Liquid level gauge.

Figure 6. External Gauges.

Figure 7. External visible break with gauges.

Optional features

High and low voltage bushings

- 200 A (15, 25 kV) bushing inserts
- 200 A (15, 25 kV) feed thru inserts
- 200 A (15, 25 kV) (HTN) bushing wells with removable studs
- High-voltage 600 A (15, 25, 35 kV) deadbreak one-piece bushings
- Low voltage 6-, 8-holes spade
- Low voltage 12-, 16-, 20-holes spade (750-2500 kVA)
- Low voltage bushing supports

Tank/cabinet features

- Stainless steel tank base and cabinet
- Stainless steel tank base, cabinet sides and sill
- 100% stainless steel unit
- Service entrance (2 inch) in sill or cabinet side
- Touch-up paint (domestic)
- Copper ground bus bar
- Kirk-Key provisions
- Nitrogen blanket
- Bus duct cutout

Special designs

- Factory Mutual (FM)
- UL® Classified
- Triplex
- High altitude
- K-Factors
- Step-up
- Critical application
- Modulation transformers
- Seismic applications (including OSHPD)

Switches

- One, two, or three On/Off loadbreak switches
- 4-position loadbreak V-blade switch or T-blade switch
- Delta-wye switch
- 3-position V-Blade selector switch
- 100 A, 150 A, 300 A tap changers
- Dual voltage switch
- Visible break with VFI interrupter interlock
- External visible break (15, 25, and 35 kV, up to 3 MVA)
- External visible break with gauges (15, 25, and 35 kV, up to 3 MVA)

Gauges and devices

- Liquid level gauge (optional contacts)
- Pressure vacuum gauge (optional contacts and bleeder)
- Dial-type thermometer (optional alarm contacts)
- Cover mounted pressure relief device (optional alarm contacts)
- Ground connectors
- Hexhead captive bolt
- Molded case circuit breaker mounting provisions
- External gauges in padlockable box

Overcurrent protection

- Bay-O-Net fusing (Current sensing, dual sensing, dual element, high amperage overload)
- Bay-O-Net expulsion fuse in series with a partial range under-oil ELSP current limiting fuse (below 23 kV)
- Cartridge fusing in series with a partial range under-oil ELSP current limiting fuse (above 23 kV)
- MagneX™ interrupter with ELSP current-limiting fuse
- Vacuum Fault Interrupter (VFI)
- Visible break window
- Fuse/switch interlock

Valves/plugs

- Drain/sampling valve in high-voltage compartment
- Globe type upper fill valve

Overvoltage protection

- Distribution-, intermediate-, or station-class surge arresters
- Elbow arresters (for dead-front connections)

Metering/fan/control

- Full metering package
- Current Transformers (CTs)
- Metering Socket
- NEMA® 4 control box (optional stainless steel)
- NEMA® 7 control box (explosion proof)
- Fan Packages

Testing

- Customer test witness
- Customer final inspection
- Zero Sequence Impedance Test
- Heat Run Test
- ANSI® Impulse Test
- Audible Sound Level Test
- RIV (Corona) Test
- Dissolved Gas Analysis (DGA) Test
- 8- or 24-Hour Leak Test

Coatings (paint)

- ANSI® Bell Green
- ANSI® #61 Light Gray
- ANSI® #70 Sky Gray
- Special paint available per request

Nameplate

- Stainless steel nameplate

Decals and labels

- High voltage warning signs
- Mr. Ouch
- Bi-lingual warning
- DOE compliant
- Customer stock code
- Customer stenciling
- Shock and arc flash warning decal
- Non-PCB decal

Construction

Core

The three-legged, step-lap mitered core construction is manufactured using a high-quality cutting machine. For maximum efficiency, cores are precisely stacked, virtually eliminating gaps in the corner joints.

Five-legged wound core or shell-type triplex designs are used for wye-wye connected transformers, and other special transformer designs.

Cores are manufactured with precision cut, burr-free, grain-oriented silicon steel. Many grades of core steel are available for optimizing core loss efficiency.

Coils

Pad-mounted transformers feature a rectangular coil configuration with wire-wound, high-voltage primaries and sheet-wound secondaries. The design minimizes axial stress developed by short circuits and provides for magnetic balancing of tap connections.

Coils are wound using the highest quality winding machines providing exacting tension control and conductor placement for superior short-circuit strength and maximum efficiency.

Extra mechanical strength is provided by diamond pattern, epoxy-coated paper insulation, used throughout the coil, with additional epoxy at heavy stress points. The diamond pattern distribution of the epoxy and carefully arranged ducts, provide a network of passages through which cooling fluid can freely circulate.

Coil assemblies are heat-cured under calculated hydraulic pressure to ensure performance against short-circuit forces.

Core and coil assemblies

Pad-mounted transformer core and coil assemblies are braced with heavy steel ends to prevent the rectangular coil from distorting under short-circuit conditions. Plates are clamped in place using presses, and welded or bolted to form a solid core and coil assembly. Core and coil assemblies exceed ANSI® and IEEE® requirements for short-circuit performance. Due to the rigidity of the design, impedance shift after short-circuit is comparable to that of circular wound assemblies.

Tanks

Transformer tanks are designed for high strength and ease of handling, installation, and maintenance. Tanks are welded using precision-cut, hot rolled, pickled and oiled steel. They are sealed to protect the insulating fluid and other internal components.

Transformer tanks are pressure-tested to withstand 7 psig without permanent distortion and 15 psig without rupture.

Tank finish

An advanced multi-stage finishing process exceeds IEEE Std C57.12.28™-2014 standards. The eight-stage pre-treatment process assures coating adhesion and retards corrosion. It converts tank surfaces to a nonmetallic, water insoluble iron phosphate coating.

The paint method consists of two distinct layers of paint. The first is an epoxy primer (E-coat) layer which provides a barrier against moisture, salt and corrosives. The two-component urethane final coat seals and adds ultraviolet protection.

Vacuum processing

Transformers are dried and filled with filtered insulating fluid under vacuum, while secondary windings are energized. Coils are heated to drive out moisture, ensuring maximum penetration of fluid into the coil insulation system.

Insulating fluid

Eaton's Cooper Power series transformers are available with electrical-grade mineral insulating oil or Envirotemp™ FR3™ fluid. The highly refined fluids are tested and degassed to assure a chemically inert product with minimal acid ions. Special additives minimize oxygen absorption and inhibit oxidation. To ensure high dielectric strength, the fluid is re-tested for dryness and dielectric strength, refiltered, heated, dried, and stored under vacuum before being added to the completed transformer.

Eaton's Cooper Power series transformers filled with Envirotemp™ FR3™ fluid enjoy unique fire safety, environmental, electrical, and chemical advantages, including insulation life extending properties.

A bio-based, sustainable, natural ester dielectric coolant, Envirotemp™ FR3™ fluid quickly and thoroughly biodegrades in the environment and is non-toxic per acute aquatic and oral toxicity tests.

Building for Environmental and Economic Sustainability (BEES) total life cycle assessment software, utilized by the US Dept. of Commerce, reports its overall environmental performance impact score at 1/4th that reported for mineral oil. Envirotemp™ FR3™ fluid has also earned the EPA Environmental Technology Verification of transformer materials.

With a fire point of 360 °C, Envirotemp™ FR3™ fluid is FM Approved® and Underwriters Laboratories (UL®) Classified "Less-Flammable" per NEC® Article 450-23, fitting the definition of a Listed Product per NEC®.

Figure 8. VFI transformer with visible break.

Pad-mounted VFI transformer

Eaton's Cooper Power series VFI transformer combines a conventional distribution transformer with the proven Vacuum Fault Interrupter (VFI). This combination provides both voltage transformation and transformer over current protection in one space saving and money saving package. The pad-mounted VFI transformer protects the transformer and provides proper coordination with upstream protective devices. When a transformer fault or overload condition occurs, the VFI breaker trips and isolates the transformer.

The three-phase VFI breaker has independent single-phase initiation, but is three-phase mechanically gang-tripped. A trip signal on any phase will open all three phases. This feature eliminates single-phasing of three phase loads. It also enables the VFI breaker to be used as a three-phase load break switch.

Due to the resettable characteristics of the VFI breaker, restoring three-phase service is faster and easier.

The sealed visible break window and switch is an option that can be installed to provide visible break contact. This feature provides enhanced safety and allows an operator to see if the loadbreak switch contacts are in an open or closed position before performing maintenance.

Envirotran™ FM Approved special protection transformer

Eaton's Cooper Power series Envirotran™ transformer is FM Approved and suitable for indoor locations. Factory Mutual Research Corporation's (FMRC) approval of the Envirotran transformer line makes it easy to comply with and verify compliance with Section 450.23, 2008 NEC, Less-Flammable Liquid-Filled Transformer Requirements for both indoor and outdoor locations.

Envirotran FM Approved transformers offer the user the benefit of a transformer that can be easily specified to comply with NEC, and makes FM Safety Data Sheet compliance simpler, while also providing maximum safety and flexibility for both indoor and outdoor installations.

Because the "FM Approved" logo is readily visible on the transformer and its nameplate, NEC compliance is now easily verifiable by the inspector.

Envirotran FM Approved transformers are manufactured under strict compliance with FMRC Standard 3990 and are filled with FM Approved Envirotemp™ FR3™ fluid, a fire-resistant dielectric coolant.

FM
APPROVED

Special application transformers

Data Center transformer

With focus rapidly shifting from simply maximizing uptime and supporting demand to improving energy utilization, the data center industry is continually looking for methods to increase its energy efficiency and reliability. Utilizing cutting edge technology, Eaton's Cooper Power series Hardened Data Center (HDC) transformers are the solution. Designed with special attention given to surge protection, HDC liquid-filled transformers provide superior performance under the harshest electrical environments. Contrary to traditional dry-type units, HDC transformers provide unsurpassed reliability, overloadability, operational life, efficiency, thermal loading and installed footprint. These units have reliably served more than 100 MW of critical data center capacity for a total of more than 6,000,000 hours without any reported downtime caused by a thermal or short-circuit coil failure.

The top priority in data center operations is uninterrupted service. Envirotran HDC transformers from Eaton, having substantially higher levels of insulation, are less susceptible to voltage surges. Eaton has experienced zero failures due to switching transients. The ANSI® and IEEE® standard impulse withstand ratings are higher for liquid-filled transformers, making them less susceptible to insulation failure. The Envirotran HDC transformer provides ultimate protection by increasing the BIL rating one level higher than standard liquid-filled transformer ratings. The cooling system of liquid-filled transformers provides better protection from severe overloads—overloads that can lead to significant loss of life or failure.

Data center design typically includes multiple layers of redundancy, ensuring maximum uptime for the critical IT load. When best in class transformer manufacturing lead times are typically weeks, not days, an unexpected transformer failure will adversely affect the facility's reliability and profitability. Therefore, the ability to determine the electrical and mechanical health of a transformer can reduce the probability of costly, unplanned downtime. Routine diagnostic tests, including key fluid properties and dissolved gas analysis (DGA), can help determine the health of a liquid-filled transformer. Although sampling is not required for safe operation, it will provide the user with valuable information, leading to scheduled repair or replacement, and minimizing the duration and expense of an outage. With a dry-type transformer, there is no reliable way to measure the health or likelihood of an impending failure.

Solar transformer

As a result of the increasing number of states that are adopting aggressive Renewable & Alternative Energy Portfolio Standards, the solar energy market is growing—nearly doubling year over year. Eaton, a key innovator and supplier in this expanding market, is proud to offer its Cooper Power series Envirotran transformers specifically designed for Solar Photovoltaic medium-voltage applications. Eaton is working with top solar photovoltaic developers, integrators and inverter manufacturers to evolve the industry and change the way we distribute power.

In accordance with this progressive stance, every Envirotran Solar transformer is filled with non-toxic, biodegradable Envirotemp™ FR3™ dielectric fluid, made from renewable seed oils. On top of its biodegradability, Envirotemp™ FR3™ fluid substantially extends the life of the transformer insulation, saving valuable resources. What better way to distribute green power than to use a green transformer. In fact, delaying conversion to Envirotran transformers places the burden of today's environmental issues onto tomorrow's generations. Eaton can help you create a customized transformer, based on site specific characteristics including: temperature profile, site altitude, solar profile and required system life. Some of the benefits gained from this custom rating include:

- Reduction in core losses
- Improved payback on investment
- Reduction in footprint
- Improved fire safety
- Reduced environmental impact

For the solar photovoltaic industry, Eaton is offering standard step up transformers and dual secondary designs, including 4-winding, 3-winding (Low-High-Low) and 3-winding (Low-Low-High) designs.

Wind transformer

Eaton is offering custom designs for renewable energy power generation. Eaton manufactures its Cooper Power series Generator Step-Up (GSU) transformers for installation at the base of every wind turbine. Additionally, grounding transformers are available for wind power generation.

DOE efficiency

The United States Department of Energy (DOE) has mandated efficiency values for most liquid type, medium voltage transformers. As a result, all applicable Eaton's Cooper Power series transformers 2500 kVA and below conform to efficiency levels as specified in the DOE ruling "10 CFR Part 431 Energy Conservation Program".

Underwriters Laboratories® (UL®) Listed and Labeled/ Classified

The Envirotran transformer from Eaton can be specified as UL® Listed & Labeled, and/or UL® Classified. Underwriters Laboratories (UL®) listing is a verification of the design and construction of the transformer to the ANSI® and IEEE® standards. UL® listing generally is the most efficient, cost-effective solution for complying with relevant state and local electrical codes. UL® Combination Classification/Listing is another way in which to comply with Section 450.23, 2008 NEC® requirements. This combines the UL® listed transformer with a UL® Classified Less-Flammable Liquid and complies with the use restrictions found within the liquid Classification.

c UL US
LISTED

K-Factor transformer

With a drastic increase in the use of ferromagnetic devices, arcing devices, and electric power converters, higher frequency loads have increased significantly. This harmonic loading has the potential to generate higher heat levels within a transformer's windings and leads by as much as 300%. Harmonic loading has the potential to induce premature failure in standard-design distribution transformers.

In addition to standard UL® "K-Factor" ratings, transformers can be designed to customer-provided specifications detailing precise loading scenarios. Onsite measurements of magnitude and frequency, alongside harmonic analysis of the connected load can be performed by Eaton engineers or a third party consultant. These field measurements are used to determine exact customer needs and outline the transformer specifications.

Eaton will design harmonic-resistant transformers that will be subjected to the unique harmonic loads. These units are designed to maintain normal temperature rise under harmonic, full-load conditions. Standard UL® "K-Factor" designs can result in unnecessary costs when the "next-highest" K-Factor must be selected for a calculated design factor. To save the customer these unnecessary costs, Eaton can design the transformer to the specific harmonic spectrum used in the application. Eaton's Cooper Power series K-factor transformers are filled with mineral oil or Envirotemp™ FR3™ fluid and enjoy the added benefits of dielectric cooling such as higher efficiencies than dry-type transformers.

Modulation transformer

Bundled with an Outboard Modulation Unit (OMU) and a Control and Receiving Unit (CRU), a Modulation Transformer Unit (MTU) is designed to remotely achieve two way communication.

The use of an MTU reduces travel time and expense versus traditional meter reading performed by high voltage electricians. Additionally, with MTU it is possible to manage and evaluate energy consumption data, providing reduced metering costs and fewer tenant complaints.

An MTU utilizes existing utility infrastructure, therefore eliminating the need to engineer and construct a dedicated communication network.

Figure 9. Modular transformer.

Inverter/rectifier bridge

Eaton complements its range of applications for transformers by offering dual winding designs. These designs are intended for connection to 12-pulse rectifier bridges.

Product attributes

To set us apart from other transformer manufactures, Eaton includes the following guarantees with every three-phase pad-mounted transformer.

Engineered to order (ETO)

Providing the customer with a well developed, cost-effective solution is the number one priority at Eaton. Using customer specifications, Eaton will work with the customer from the beginning to the end to develop a solution to fit their needs. Whether it is application specific, site specific, or a uniquely specified unit, Eaton will provide transformers with the best in class value and performance, saving the customer time and money.

Made in the U.S.A.

Eaton's three-phase pad-mounted transformers are produced right here in the United States of America. Our manufacturing facilities are positioned strategically for rapid shipment of products. Furthermore, should the need arise, Eaton has a broad network of authorized service repair shops throughout the United States.

Superior paint performance

Protecting transformers from nature's elements worldwide, Eaton's E-coat system provides unrivaled transformer paint life, and exceeds IEEE Std C57.12.28™-2014 and IEEE Std C57.12.29™-2005 standards. In addition to the outside of the unit, each transformer receives a gray E-coat covering in the interior of the tank and cabinet, providing superior rust resistance and greater visibility during service.

If the wide range of standard paint selections does not suit the customer's needs, Eaton will customize the paint color to meet their requirements.

Rectangular coil design

Eaton utilizes a rectangular coil design. This winding technique results in a smaller overall unit footprint as well as reducing the transformer weight. The smaller unit size does not hinder the transformer performance in the least. Units have proven short circuit withstand capabilities up to 10 MVA.

Testing

Eaton performs routing testing on each transformer manufactured including the following tests:

- Insulation Power Factor: This test verifies that vacuum processing has thoroughly dried the insulation system to required limits.
- Ratio, Polarity, and Phase Relation: Assures correct winding ratios and tap voltages; checks insulation of HV and LV circuits. Checks entire insulation system to verify all live-to-ground clearances.
- Resistance: This test verifies the integrity of internal high-voltage and low-voltage connections; provides data for loss upgrade calculations.
- Routine Impulse Tests: The most severe test, simulating a lightning surge. Applies one reduced wave and one full wave to verify the BIL rating.
- Applied Potential: Applied to both high-voltage and low-voltage windings, this test stresses the entire insulation system to verify all live-to-ground clearances.
- Induced Potential: 3.46 times normal plus 1000 volts for reduced neutral designs.
- Loss Test: These design verification tests are conducted to assure that guaranteed loss values are met and that test values are

within design tolerances. Tests include no-load loss and excitation current along with impedance voltage and load loss.

- Leak Test: Pressurizing the tank to 7 psig assures a complete seal, with no weld or gasket leaks, to eliminate the possibility of moisture infiltration or fluid oxidation.

Design performance tests

The design performance tests include the following:

- Temperature Rise: Our automated heat run facility ensures that any design changes meet ANSI® and IEEE® temperature rise criteria.
- Audible Sound Level: Ensures compliance with NEMA® requirements.
- Lightning Impulse: To assure superior dielectric performance, this test consists of one reduced wave, two chopped waves and one full wave in sequence, precisely simulating the harshest conditions.

Thomas A Edison Research and Test Facility

We are constantly striving to introduce new innovations to the transformer industry, bringing you the highest quality transformer for the lowest cost. Eaton's Cooper Power series Transformer Products are ISO 9001 compliant, emphasizing process improvement in all phases of design, manufacture, and testing. We have invested millions of dollars in the Thomas A. Edison Technical Center, our premier research facility in Franksville, Wisconsin affirming our dedication to introducing new innovations and technologies to the transformer industry. This research facility is fully available for use by our customers to utilize our advanced electrical and chemical testing labs.

Three-phase pad-mounted compartmental type transformer

Eaton
1000 Eaton Boulevard
Cleveland, OH 44122
United States
Eaton.com

Eaton's Cooper Power Systems Division
2300 Badger Drive
Waukesha, WI 53188
United States
Eaton.com/cooperpowerseries

© 2015 Eaton
All Rights Reserved
Printed in USA
Publication No. CA202003EN

Eaton, Cooper Power, MagneX, UltraSIL, Evolution, and Envirotran are valuable trademarks of Eaton in the U.S. and other countries. You are not permitted to use these trademarks without the prior written consent of Eaton.
IEEE Std C57.12.28™-2005 and Std C57.12.29™-2005 standards are trademarks of the Institute of Electrical and Electronics Engineers, Inc., (IEEE). This publication is not endorsed or approved by the IEEE.
IEEE® is a registered trademark of the Institute of Electrical and Electronics Engineers, Inc.
ANSI® is a registered trademark of American National Standards Institute.
National Electrical Code® and NEC® are registered trademarks of the National Fire Protection Association, Inc., Quincy, MA.
Underwriters Laboratories® and UL® are registered trademarks of UL LLC.
FM Approved®, FMRC, and Factory Mutual Research Corporation are trademarks of FM Global.
Envirotemp™ and FR3™ are licensed trademarks of Cargill, Incorporated.

For Eaton's Cooper Power series three-phase transformer product information call 1-877-277-4636 or visit: www.eaton.com/cooperpowerseries.

Powering Business Worldwide

DEPARTMENT OF THE ARMY
ALBUQUERQUE DISTRICT, CORPS OF ENGINEERS
ALBUQERQUE DISTRICT OFFICE
4101 JEFFERSON PLAZA NE
ALBUQUERQUE, NM 87109

SUBMITTAL REVIEW VERIFICATION SHEET

PROJECT TITLE: Kirtland BFF Mid-Plume Pump and Treat System Expansion
CONTRACT NUMBER: W912DR-12-D-0006 DM01
DATE RECEIVED: 8-17-2017
DATE REVIEWED: 8-24-2017

DESCRIPTION OF ITEMS REVIEWED:

1. Pull Box and Cover (PG4848BA48 and PG4848HA0017)

NO EXCEPTIONS TAKEN.	**X**
EXCEPTIONS AS NOTED ON DRAWINGS AND/OR ATTACHED SHEETS(S). RESUBMISSION NOT REQUIRED.	
EXCEPTIONS AS NOTED ON DRAWINGS AND/OR ATTACHED SHEETS(S). RESUBMISSION REQUIRED.	
RECEIPT ACKKNOWLEDGED.	

Notes:

NOTE: ITEMS REVIEWED AS TO GENERAL LAYOUT ONLY. DIMENSIONS AND QUANTITIES NOT CHECKED. REVIEW DOES NOT RELIEVE CONTRACTOR OF RESPONSIBILITIES FOR ANY ERRORS WHICH MAY EXIST AS CONTRACTOR SHALL BE RESPONSIBLE FOR DIMENSIONS AND DESIGN OF ADEQUATE CORRECTIONS, DETAILS AND SATISFACTORY CONSTRUCTION OF WORK.

SIGNATURE SANCHEZ.AMY.ELIZABETH.1454434338 Digitally signed by SANCHEZ.AMY.ELIZABETH.1454434338 DN: c=US, o=U.S. Government, ou=DoD, ou=PKI, ou=USA, cn=SANCHEZ.AMY.ELIZABETH.1454434338 Date: 2017.08.24 12:02:43 -06'00' **DATE** 8/24/2017

EA Engineering, Science, and Technology, Inc., PBC

Submittal Review Sheet 1

Project Name: **Kirtland BFF Mid-Plume Pump and Treat System Expansion**			Date Received: **8/16/2017**
Project Owner: **Kirtland Air Force Base**			Checked By: **Tyler Curley**
Contractor: **Wilson Electric**	Engineer: **EA Engineering, Science and Technology, Inc., PBC.**		Log Page: **NA**
Address: **501 General Somervell SE # B** **Albuquerque, NM 87123**	Address: **320 Gold Ave. SW, Suite 1300** **Albuquerque, NM 87102**		EA No.: 62599DM01
			Spec. Section: **NA**
			Drawing/Detail No.: **E-000/E-001**
ATTN: Matthew Walstrom	ATTN: **Devon Jercinovic**	1st Sub	Re-Sub
Date Transmitted: **8/17/2017**	Prev. Transmittal Date:		

Item No.	No. Copies	Description	Manufacturer	Mfg/Vendor Dwg or Detail	Action Taken*
1	1	Pull Boxes	Quazite		**A**

The Action Designated Above is in Accordance with the Following Legend:

A – Furnish as Submitted
B – Furnish as Noted
C – Revise and Re-submit
1. Not enough information for review.
2. No reproducible submitted.
3. Copies illegible.
4. Not enough copies submitted.
5. Wrong sequence number.
6. Wrong resubmittal number.
7. Wrong Spec. Section.
8. Wrong form used.
9. See Comments.

D – Rejected
E – Engineer's Review not Required
1. Submittal not required.
2. Supplemental Information. Submittal retained for Information purposes only.
3. Information reviewed and approved on prior submittal.
4. See Comments.

Review is for general compliance with Contract Documents. No responsibility is assumed for correctness of dimensions or detail. Contractor is required to specify deviations from contract requirements. Lack of exceptions noted by Engineer does not waive Contractor's obligation to comply with Drawings and Specifications.

Comments:
Items reviewed and confirmed to meet requirements
(Reviewed Material in Parentheses)
Issues in Bold

Pull boxes conform to the electrical drawings.

By: _____ Date: 8/17//17

Distribution: [1] Contractor [1] Engineer [1] Owner

Quazite®

SPECIFICATIONS/DATA

48" x 48" PG Style (Stackable) Assembly

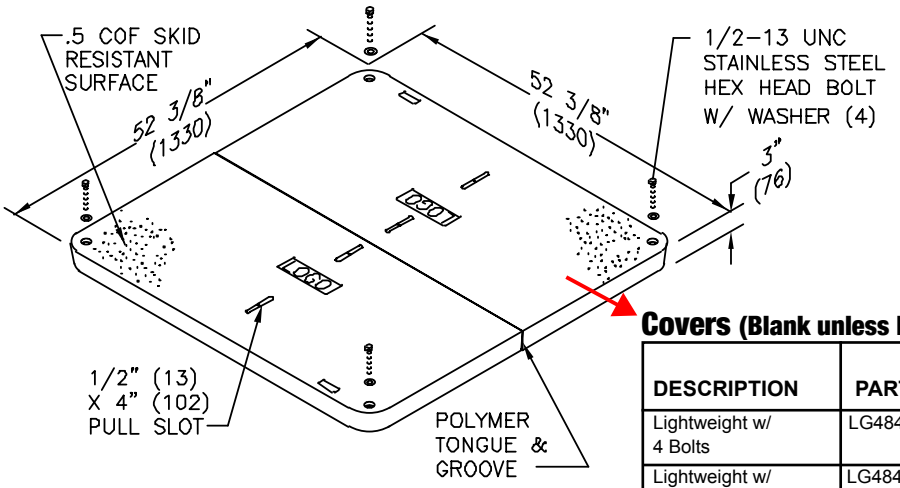

COVER

Lid to say "Electric"

Covers (Blank unless logo is specified)

DESCRIPTION	PART NO.	WEIGHT #	DESIGN/TEST LOAD #	ANSI TIER*
Lightweight w/ 4 Bolts	LG4848CA00	286 (130.0 kg)	5,000 / 7,500	5
Lightweight w/ No Bolts	LG4848WA00	286 (130.0 kg)	5,000 / 7,500	5
Heavy Duty w/W6 x 12 Wide Flange Beam w/4 Bolts*	PG4848HA00	364 (165.1 kg)	15,000 / 22,500	15
Extra Heavy Duty w/ 6 x 4 Tubing w/ 4 Bolts*	PG4848HH00	596 (270.0 kg)	22,500 / 33,750	22
Round 39" Opening	PG4848C500	377 (171 kg)	5,000 / 7,500	5

• Covers with meter lids available upon request. See page 12 or page 56 for meter lid cover load rating explanation.
* Total weight for 48" x 48" HA beam is 51 lbs (23 kg). Total weight for 48" x 48" HH tubing is 95 lbs (43 kg).

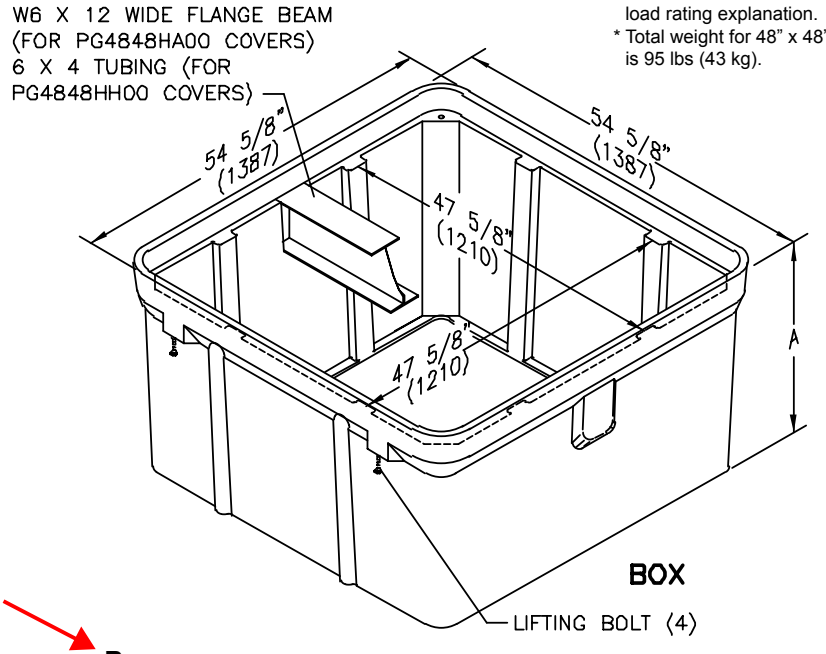

BOX

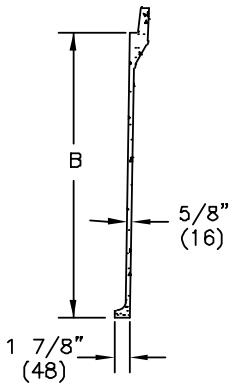

Boxes (Stackable with self-aligning, replaceable EZ-Nut)

DESCRIPTION	PART NO.	WEIGHT #	DIMENSION A	DIMENSION B	DESIGN/TEST LOAD #	ANSI TIER*
Open bottom	PG4848BA36	629 (285.0 kg)	36" (914 mm)	33" (838 mm)	22,500 / 33,750	22
	PG4848BA48	866 (393.0 kg)	48" (1219 mm)	45" (1143 mm)	22,500 / 33,750	22
Solid Bottom	PG4848DA36	663 (301.0 kg)	36 1/2" (927 mm)	33" (838 mm)	22,500 / 33,750	22
	PG4848DA48	940 (426.0 kg)	48 1/2" (1232 mm)	45" (1143 mm)	22,500 / 33,750	22

Dimensions & weights in parentheses are metric equivalent.
* Loadings comply with ANSI/SCTE 77 (see page 9).

ENCLOSURE DRAWINGS

DEPARTMENT OF THE ARMY
ALBUQUERQUE DISTRICT, CORPS OF ENGINEERS
ALBUQERQUE DISTRICT OFFICE
4101 JEFFERSON PLAZA NE
ALBUQUERQUE, NM 87109

SUBMITTAL REVIEW VERIFICATION SHEET

PROJECT TITLE: Kirtland BFF Mid-Plume Pump and Treat System Expansion
CONTRACT NUMBER: W912DR-12-D-0006 DM01
DATE RECEIVED: 09-06-2017
DATE REVIEWED: 09-12-2017

DESCRIPTION OF ITEMS REVIEWED:

1. Fiber Optic Data Transmittal System- Resubmittal

NO EXCEPTIONS TAKEN.	**X**
EXCEPTIONS AS NOTED ON DRAWINGS AND/OR ATTACHED SHEETS(S). RESUBMISSION NOT REQUIRED.	
EXCEPTIONS AS NOTED ON DRAWINGS AND/OR ATTACHED SHEETS(S). RESUBMISSION REQUIRED.	
RECEIPT ACKKNOWLEDGED.	

Notes:

NOTE: ITEMS REVIEWED AS TO GENERAL LAYOUT ONLY. DIMENSIONS AND QUANTITIES NOT CHECKED. REVIEW DOES NOT RELIEVE CONTRACTOR OF RESPONSIBILITIES FOR ANY ERRORS WHICH MAY EXIST AS CONTRACTOR SHALL BE RESPONSIBLE FOR DIMENSIONS AND DESIGN OF ADEQUATE CORRECTIONS, DETAILS AND SATISFACTORY CONSTRUCTION OF WORK.

SIGNATURE SANCHEZ.AMY.ELIZABETH.1454434338 Digitally signed by SANCHEZ.AMY.ELIZABETH.1454434338 DN: c=US, o=U.S. Government, ou=DoD, ou=PKI, ou=USA, cn=SANCHEZ.AMY.ELIZABETH.1454434338 Date: 2017.09.12 06:54:24 -06'00' **DATE** 9/12/2017

EA Engineering, Science, and Technology, Inc., PBC

Submittal Review Sheet 1

Project Name: **Kirtland BFF Mid-Plume Pump and Treat System Expansion**				Date Received: **9/5/2017**		
Project Owner: **Kirtland Air Force Base**				Checked By: **Tyler Curley**		
Contractor: **Wilson Electric**	Engineer: **EA Engineering, Science and Technology, Inc., PBC.**			Log Page: **NA**		
Address: **501 General Somervell SE # B** **Albuquerque, NM 87123**	Address: **320 Gold Ave. SW, Suite 1300** **Albuquerque, NM 87102**			EA No.: 62599DM01		
				Spec. Section: **NA**		
				Drawing/Detail No.: **NA**		
ATTN: Matthew Walstrom	ATTN: **Devon Jercinovic**			1st Sub		Re-Sub
Date Transmitted: **9/6/2017**	Prev. Transmittal Date: **8/25/2017**					

Item No.	No. Copies	Description	Manufacturer	Mfg/Vendor Dwg or Detail	Action Taken*
1	1	Fiber Optic Data Transmittal System	AFL/Corning/Hitachi		**A**

The Action Designated Above is in Accordance with the Following Legend:

A – Furnish as Submitted
B – Furnish as Noted
C – Revise and Re-submit
1. Not enough information for review.
2. No reproducible submitted.
3. Copies illegible.
4. Not enough copies submitted.
5. Wrong sequence number.
6. Wrong resubmittal number.
7. Wrong Spec. Section.
8. Wrong form used.
9. See Comments.

D – Rejected
E – Engineer's Review not Required
1. Submittal not required.
2. Supplemental Information. Submittal retained for Information purposes only.
3. Information reviewed and approved on prior submittal.
4. See Comments.

Review is for general compliance with Contract Documents. No responsibility is assumed for correctness of dimensions or detail. Contractor is required to specify deviations from contract requirements. Lack of exceptions noted by Engineer does not waive Contractor's obligation to comply with Drawings and Specifications.

Comments:
Items reviewed and confirmed to meet requirements
(Reviewed Material in Parentheses)
Issues in Bold

Meets specification, issues have been resolved.

By: _____ Date: 9/6//17

Distribution: [1] Contractor [1] Engineer [1] Owner

DEPARTMENT OF THE ARMY
ALBUQUERQUE DISTRICT, CORPS OF ENGINEERS
ALBUQERQUE DISTRICT OFFICE
4101 JEFFERSON PLAZA NE
ALBUQUERQUE, NM 87109

SUBMITTAL REVIEW VERIFICATION SHEET

PROJECT TITLE: Kirtland BFF Mid-Plume Pump and Treat System Expansion
CONTRACT NUMBER: W912DR-12-D-0006 DM01
DATE RECEIVED: 08-25-2017
DATE REVIEWED: 08-29-2017

DESCRIPTION OF ITEMS REVIEWED:

1. Fiber Optic Data Transmittal System

NO EXCEPTIONS TAKEN.	
EXCEPTIONS AS NOTED ON DRAWINGS AND/OR ATTACHED SHEETS(S). RESUBMISSION NOT REQUIRED.	
EXCEPTIONS AS NOTED ON DRAWINGS AND/OR ATTACHED SHEETS(S). RESUBMISSION REQUIRED.	**X**
RECEIPT ACKKNOWLEDGED.	

Notes:

Page 3- NETSIAN Part I: Product Data: The part number listed (61646-12) for the Indoor/Outdoor Tight Buffered OM2 12 Fiber is not listed in the table on page 84. Should the part number be 61464-12? Yes, please see REV. A submittal with the correct part number.

The Buffer Tube Fan-Out Kits on Page 2 of the CORNING the Design table lists the cable type to be cable with 250UM. Will this be compatible with the 50UM fiber? Yes, this fan out kit is compatible with the fiber specified. The 250UM is the coating around the fiber core and cladding, the 50UM is the core size of the fiber.

See attached

NOTE: ITEMS REVIEWED AS TO GENERAL LAYOUT ONLY. DIMENSIONS AND QUANTITIES NOT CHECKED. REVIEW DOES NOT RELIEVE CONTRACTOR OF RESPONSIBILITIES FOR ANY ERRORS WHICH MAY EXIST AS CONTRACTOR SHALL BE RESPONSIBLE FOR DIMENSIONS AND DESIGN OF ADEQUATE CORRECTIONS, DETAILS AND SATISFACTORY CONSTRUCTION OF WORK.

SIGNATURE _____ **DATE** 8/30/2017

Kirtland Air Force Base
BFF Conveyance Line

Kirtland Air Force Base
Albuquerque, New Mexico

Product Data Submittals
Fiber Optic Data Transmission System REV. A

Provided By:
NETSIAN TECHNOLOGIES GROUP
501 General Somervell St. SE, Suite B,
Albuquerque, NM 87123-3222
(505) 237-3205
(505) 271-0246
http://www.netsian.net
September 5, 2017

PROJECT MANAGER:
Joe Martinez, RCDD

COA Project #586082

NETSIAN TECHNOLOGIES GROUP

JOB NAME: Kirtland Air Force Base BFF Conveyance Line
COA JOB NO: 586082
PROJECT MANAGER: Joe Martinez, RCDD

Special System: Fiber Optic Data Transmission System

Table of Contents

Part I: Product Data

Part II: Test Reports - **Will be submitted at closeout**

Part III: Certificates

Part IV: Operation and Maintenance Data - **Will be submitted at closeout**

501 General Somervell St. SE Suite B ▪ Albuquerque, New Mexico 87123 ▪ Phone: 505.237.3201 ▪ Fax: 505.271.0246
EE98 #88792
www.netsian.net

NETSIAN TECHNOLOGIES GROUP

JOB NAME: Kirtland Air Force Base BFF Conveyance Line
COA JOB NO: 586082
PROJECT MANAGER: Joe Martinez, RCDD

Special System: Fiber Optic Data Transmission System

Part I: Product Data

Manufacture	Part #	Description
Hitachi	61464-12	Indoor/Outdoor Tight Buffered OM2 12 Fiber
AFL	WME02E	Wall Mount Interconnect Enclosure
AFL	FM003072	Black Blank Fiber Adapter Panel
AFL	FM003112	Lightlink Adapter Plate LC Duplex 12 Fiber
AFL	CS000321	LC Anaerobic Connectors, Multimode
Corning	FAN-BT25-12	Buffer Tube Fan-Out Kits, Indoor

Tight Buffered

2 through 144 fibers

HITACHI
Inspire the Next

Product Highlights

- REACH & RoHS 2 compliant.
- Made in USA.
- All multimode, and singlemode cables (except OM1) utilize bend-insensitive optical fibers.
- UV and fungus resistent jacket.
- Tight buffered construction.
- Easy to strip and terminate.
- Each fiber is color coded for easy identification.
- Dry, super absorbent polymers (SAPs) eliminate water migration in cable interstices.
- Suitable for lashed aerial, duct, underground conduit and indoor plenum applications.
- 900 um buffered design recommended for easy termination.
- Cables with more than 24 fibers have fibers segregated into 12-fiber sub-units.

Options

- OM4 optical fibers with extended 10 gigabit Ethernet distances are available.
- OS2 optical fibers with enhanced bend-insensitive performance are available.
- Wideband multimode fiber is available.

Applications

- Applications include 10, 40 & 100 gigabit Ethernet, Fibre Channel, Video, Security, Automation.

Standards

- TIA/EIA-568-C.3
- ISO/IEC 11801, 2nd edition
- Telcordia GR-409-CORE

Indoor/Outdoor Tight Buffered (Plenum)

(UL) OFNP c(UL) OFNP FT6

PART NUMBERS BY FIBER COUNT

FIBERS	FIBERS/ TUBE	62.5 UM OM1	50 UM OM2	50 UM OM3	50 UM OM4	50 UM OM5	8.3 UM OS2
2	2	61460-2	61464-2	61468-2	61894-2	62769-2	61459-2
4	4	61460-4	61464-4	61468-4	61894-4	62769-4	61459-4
6	6	61460-6	61464-6	61468-6	61894-6	62769-6	61459-6
8	8	61460-8	61464-8	61468-8	61894-8	62769-8	61459-8
10	10	61460-10	61464-10	61468-10	61894-10	62769-10	61459-10
12	12	61460-12	61464-12	61468-12	61894-12	62769-12	61459-12
24	24	61460-24	61464-24	61468-24	61894-24	62769-24	61459-24
36	6	62178-36	62179-36	62180-36	62181-36	62770-36	62066-36
48	12	61979-48	61956-48	61959-48	61980-48	62771-48	61480-48
72	12	61979-72	61956-72	61959-72	61980-72	62771-72	61480-72
96	12	61979-96	61956-96	61959-96	61980-96	62771-96	61480-96
144	12	61979-144	61956-144	61959-144	61980-144	62771-144	61480-144

SPECIFICATIONS BY FIBER COUNT

					RECOMMENDED MAXIMUM LOADS					
FIBERS	FIBERS/ TUBE	TUBE LAYOUT	CABLE O.D.		INSTALL		OPERATION		CABLE WEIGHT	
			in.	mm	lbs-f	N	lbs-f	N	lbs/1000 ft	kg/1000m
2	2	x	.190	4.83	128	570	38	171	12.6	18.8
4	4	x	.190	4.83	128	570	38	171	13.9	20.7
6	6	x	.190	4.83	128	570	38	171	15.1	22.5
8	8	x	.230	5.84	160	712	48	214	20.0	29.8
10	10	x	.230	5.84	160	712	48	214	21.3	31.7
12	12	x	.230	5.84	160	712	48	214	22.5	33.5
24	24	x	.330	8.38	288	1282	86	385	50.2	74.8
36	6	6xCSM	.639	16.2	600	2670	200	890	159.2	236.9
48	12	4xCSM	.627	15.9	640	2849	192	855	135.1	201.1
72	12	6xCSM	.756	19.2	960	4273	288	1282	226.6	337.2
96	12	8xCSM	.941	23.9	1280	5696	384	1709	367.9	547.6
144	12	9x3xCSM	1.072	27.2	1920	8546	576	2564	396.8	590.5

Cable Characteristics

Note: Part number rows in upper table directly correspond to cable characteristic rows in the same location of the lower table.

Multimode and Singlemode

Tight Buffered

Indoor/Outdoor Tight Buffered (Plenum)

(UL) OFNP c(UL) OFNP FT6

Optical Specifications

TIA/EIA-568-C.3 | ISO/IEC 11801, 2nd edition | Telcordia GR-409-CORE

Fiber type	Max. Attenuation		Min OFL Bandwidth		Min EMBc Bandwidth		Gb Ethernet distance		10 Gb Ethernet distance	
	(dB/km)		(MHz-km)		(MHz-km)		(m)		(m)	
	850nm (MM)	1300nm (MM)	850nm (MM)	1300nm (MM)	850nm (MM)	1300nm (MM)	850nm (MM)	1300nm (MM)	850nm (MM)	1300nm (MM)
OM1	3.5	1.0	200	500	220	N/A	300	550	33	N/A
OM2	3.0	1.0	700	500	950	N/A	750	550	150	N/A
OM3	3.0	1.0	1500	500	2000	N/A	1000	550	300	N/A
OM4	3.0	1.0	3500	500	4700	N/A	1100	550	550	N/A
OM5*	3.0	1.0	3500	500	4700	N/A	1100	550	550	N/A
	1310nm (SM)	1550nm (SM)	1310nm (SM)	1550nm (SM)	1310nm (SM)	1550nm (SM)	1310nm (SM)	1550nm (SM)	1310nm (SM)	1550nm (SM)
OS2	0.5	0.5	N/A	N/A	N/A	N/A	> 25,000	> 40,000	10,000 - 25,000	40,000

Hitachi Cable America reserves the right to revise any specifications.

*OM5 optical fiber tested by glass manufacturer and exceeds the requirements of all applicable industry standards.

Cable Temperature Ranges

Storage: -40° to 70°C (-40° to 158°F)
Installation: 0°C to 60°C (32° to 140°F)
Operating: -40° to 70°C (-40° to 158°F)

Features

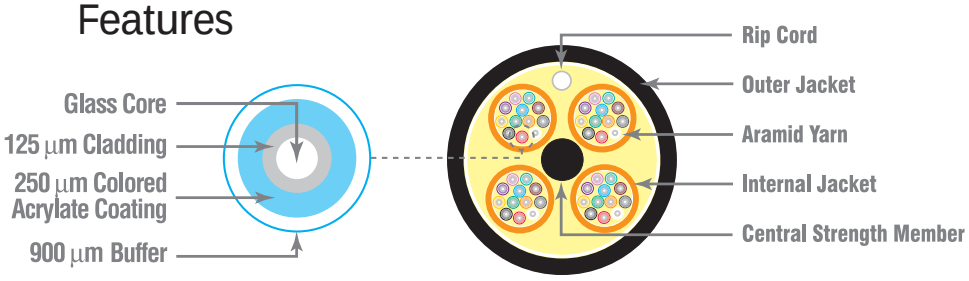

DIELECTRIC MATERIALS

Overall Jacket — PLENUM — Flame-retardant thermoplastic

Diagram scale approx. 3:1

Mechanical Specifications

- Bend radius, no load = 10x cable overall diameter
- Bend radius, load = 20x cable overall diameter

plus CORNING® ClearCurve® Optical Fiber

Photo is for representation purposes only.

WME-02

WME-02 shown empty

WME-02 shown fully loaded

Wall Mount Interconnect Enclosure (WME) with Two LGX® Mounting Positions

AFL's wall mount interconnect enclosure (WME02) provides a convenient convergence point for interconnecting and/or splicing in wall mount applications. Provisioned for up to two LGX compatible adapter plates or optical modules, the enclosure features a well-engineered solution for fiber and cable management on both the ingress and egress openings of the enclosure. Robust steel construction ensures the highest level of protection for sensitive components while integrated roll-formed hinges eliminate possible fiber pinch points while deploying or servicing components within. The WME02 features discrete access doors for provider and customer access which are independently lockable with a common pad-lock or tube-style keyed lock.

Features

- Fits comfortably into new and existing interconnect, cross-connect and co-location environments
- U-shaped cable entry eliminates the need to feed preconnectorized cables through an inconvenient access port
- Modular design fully compatible with Poli-MOD® products and XFM optical cassettes
- Dual doors with separate locking options for flexibility and security
- Available empty, with adapters, or with adapters, splice trays and pigtails pre-installed
- LGX 118 compatible
- Optional splice tray and holder (ordered separately)
- All major connector types are supported

Applications

- Co-Location sites
- Customer premise
- Hub/OTN sites
- Telecommunication closets
- Campus/enterprise environments

Specifications

- Solid steel construction
- Powder coat black textured finish
- Top or bottom cable entry with dust resistant grommets
- Dual-hasp locking/security system
- 12 to 24 fiber patch and splice density
- Two LGX mounting positions
- Physical dimensions: 12.0"H x 14.0"W x 2.5"D
- Empty version weight: 10.65 lbs.

LGX is a registered trademark of Furukawa Electric North America, Inc.

© 2010, AFL, all rights reserved. PP-2-00107, Revision 3, 1.11.16
Specifications are subject to change without notice.

Wall Mount Interconnect Enclosure (WME) with Two LGX® Mounting Positions

Ordering Information

EMPTY	
DESCRIPTION	AFL NO.
WME02 Empty	WME02E

HALF LOADED: WME WITH ADAPTER PLATES AND ADAPTERS ONLY				
CONNECTOR TYPE	FIBER COUNT	AFL NO.		
		UPC SM (BLUE)	APC SM (GREEN)	PC MM (BEIGE)
SC	6	WME02AS-USCSM-006000	WME02AS-ASCSM-006000	WME02AS-PSCM6-006000
	12	WME02AS-USCSM-012000	WME02AS-ASCSM-012000	WME02AS-PSCM6-012000
	24	WME02AH-USFSM-024000	WME02AH-ASFSM-024000	WME02AH-PSFM6-024000
LC	6	WME02AS-UDLSM-006000	WME02AS-ADLSM-006000	WME02AS-PDLM6-006000
	12	WME02AS-UDLSM-012000	WME02AS-ADLSM-012000	WME02AS-PDLM6-012000
	24	WME02AH-UDLSM-024000	WME02AH-ADLSM-024000	WME02AH-PDLM6-024000
ST	6	WME02AS-USTSM-006000	—	WME02AS-PSTM6-006000
	12	WME02AS-USTSM-012000	—	WME02AS-PSTM6-012000
	24	WME02AH-USTSM-024000	—	WME02AH-PSTM6-024000
FC	6	WME02AS-UFCSM-006000	WME02AS-AFCSM-006000	WME02AS-PFCM5-006000
	12	WME02AS-UFCSM-012000	WME02AS-AFCSM-012000	WME02AS-PFCM5-012000
	24	WME02AH-UFCSM-024000	WME02AH-AFCSM-024000	WME02AH-PFCM5-024000

Connector/Adapter Key

TYPE	DESCRIPTION
ASC	Angle Polish SC (ZR) sleeve-SM
ASF	Angle Polish SC Duplex (ZR) sleeve-SM
PSC	Physical Polish SC (PB) sleeve-MM
PSF	Physical Polish SC Duplex (PB) sleeve-MM
USC	Ultra Polish SC with (ZR) sleeve-SM
USF	Ultra Polish SC Duplex (ZR) sleeve-SM
PST	Physical Polish ST (PB) sleeve-MM
UST	Ultra Polish ST (ZR) sleeve-SM
AFC	Angle Polish FC (ZR) sleeve-SM
PFC	Physical Polish FC (PB) sleeve-MM
UFC	Ultra Polish FC (ZR) sleeve-SM
ADL	Angle Polish LC Duplex (ZR) sleeve-SM
PDL	Physical Polish LC Duplex (PB) sleeve-MM
PLC	Physical Polish LC (PB) sleeve-MM
UDL	Ultra Polish LC Duplex (ZR) sleeve-SM
ULC	Ultra Polish LC (ZR) sleeve-SM

LOADED: WME WITH ADAPTER PLATES/ADAPTERS/SPLICE TRAYS/PIGTAIL (900 µm TIGHT BUFFERED FIBERS 3 METERS IN LENGTH)					
CONNECTOR TYPE	FIBER COUNT	AFL NO.			
		UPC SM (BLUE)	APC SM (GREEN)	PC MM 62.5 µm (BEIGE)	PC MM 50 µm (BLACK)
SC	6	WME02FS-USCSM-006110	WME02FS-ASCSM-006110	WME02FS-PSCM6-006110	WME02FS-PSCM5-006110
	12	WME02FS-USCSM-012110	WME02FS-ASCSM-012110	WME02FS-PSCM6-012110	WME02FS-PSCM5-012110
	24	WME02FH-USFSM-024120	WME02FH-ASFSM-024120	WME02FH-PSFM6-024120	WME02FH-PSFM5-024120
LC	6	WME02FS-UDLSM-006110	WME02FS-ADLSM-006110	WME02FS-PDLM6-006110	WME02FS-PDLM5-006110
	12	WME02FS-UDLSM-012110	WME02FS-ADLSM-012110	WME02FS-PDLM6-012110	WME02FS-PDLM5-012110
	24	WME02FH-UDLSM-024120	WME02FH-ADLSM-024120	WME02FH-PDLM6-024120	WME02FH-PDLM5-024120
ST	6	WME02FS-USTSM-006110	—	WME02FS-PSTM6-006110	WME02FS-PSTM5-006110
	12	WME02FS-USTSM-012110	—	WME02FS-PSTM6-012110	WME02FS-PSTM5-012110
	24	WME02FH-USTSM-024120	—	WME02FH-PSTM6-024120	WME02FH-PSTM5-024120
FC	6	WME02FS-UFCSM-006110	WME02FS-AFCSM-006110	WME02FS-PFCM6-006110	WME02FS-PFCM5-006110
	12	WME02FS-UFCSM-012110	WME02FS-AFCSM-012110	WME02FS-PFCM6-012110	WME02FS-PFCM5-012110
	24	WME02FH-UFCSM-024120	WME02FH-AFCSM-024120	WME02FH-PFCM6-024120	WME02FH-PFCM5-024120

ACCESSORIES	
DESCRIPTION	AFL NO.
Splice Tray Kit: Single Fusion 12F, 2RU, WME02, WME04, 1 Splice Tray	FM002827-1
Splice Tray Kit: Single Fusion 12F, 2RU, WME02, WME04, 2 Splice Trays	FM002827-2

LGX is a registered trademark of Furukawa Electric North America, Inc.

© 2010, AFL, all rights reserved. PP-2-00107, Revision 3, 1.11.16
Specifications are subject to change without notice.

LightLink Adapter Plates

LightLink Adapter Plates add versatility to AFL's panel product line. Adapter plates are compatible with industry standard platforms allowing for easy upgrades to existing panels. Adapter Plates come preloaded with adapters and are available in 6, 8, 12 and 24 pack versions for single-fiber adapters. Higher fiber counts are achievable with multi-fiber adapters. Blank plates are also available for unused space in panels.

Features

- Metal Plate with Nylatches
- Polyurethane powder coated (white or black)
- LGX® compatible

Specifications

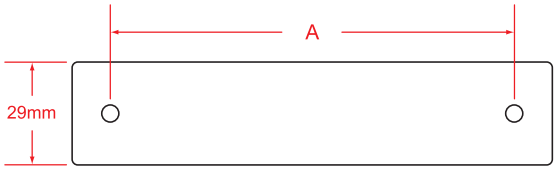

DIMENSION A
118 mm LGX®
170 mm LGX®

Ordering Information

AFL NO.	ADAPTER TYPE	SIMPLEX/DUPLEX/ QUAD	ADAPTER COLOR	FIBER COUNT	PLATE HEIGHT	PLATE COLOR
BLANK						
FM003072	BLANK	BLANK	NA	0	LGX (118)	BLACK
FM003462	BLANK	BLANK	NA	0	LGX (118)	WHITE
FM000343	BLANK	BLANK	NA	0	LGX (118)	SMOOTH BLACK
FM003434	BLANK	BLANK	NA	0	LGX (170)	BLACK
FM003433	BLANK	BLANK	NA	0	LGX (170)	WHITE
SC						
FM003295	SC	DUPLEX	AQUA	12F	LGX (118)	BLACK
FM002272	SC	DUPLEX	AQUA	12F	LGX (118)	WHITE
FM003293	SC	DUPLEX	BEIGE	12F	LGX (118)	BLACK
FM002273	SC	DUPLEX	BEIGE	12F	LGX (118)	WHITE
FM003301	SC	DUPLEX	BLACK	12F	LGX (118)	BLACK
FM003297	SC	DUPLEX	BLUE	12F	LGX (118)	BLACK
FM002271	SC	DUPLEX	BLUE	12F	LGX (118)	WHITE
FM002633	SC	DUPLEX	GREEN	12F	LGX (118)	BLACK
FM002634	SC	DUPLEX	GREEN	12F	LGX (118)	WHITE
FM000149	SC	DUPLEX	BEIGE	12F	LGX (170)	WHITE
FM000148	SC	DUPLEX	BEIGE	12F	LGX (170)	BLACK
FM000144	SC	DUPLEX	BLUE	12F	LGX (170)	BLACK
FM000145	SC	DUPLEX	BLUE	12F	LGX (170)	WHITE
FM000152	SC	DUPLEX	GREEN	12F	LGX (170)	BLACK
FM000153	SC	DUPLEX	GREEN	12F	LGX (170)	WHITE
FM003287	SC	DUPLEX	AQUA	6F	LGX (118)	BLACK
FM003285	SC	DUPLEX	BEIGE	6F	LGX (118)	BLACK
FM003398	SC	DUPLEX	BEIGE	6F	LGX (118)	WHITE
FM003299	SC	DUPLEX	BLACK	6F	LGX (118)	BLACK
FM003289	SC	DUPLEX	BLUE	6F	LGX (118)	BLACK
FM003458	SC	DUPLEX	BLUE	6F	LGX (118)	WHITE
FM003283	SC	DUPLEX	GREEN	6F	LGX (118)	BLACK
FM000115	SC	DUPLEX	GREEN	6F	LGX (118)	WHITE

LGX is a registered trademark of Furukawa Electric North America, Inc.

© 2010, AFL, all rights reserved. PP-2-00169, Revision 7, 2.22.17
Specifications are subject to change without notice.

LightLink Adapter Plates

Ordering Information (cont.)

AFL NO.	ADAPTER TYPE	SIMPLEX/DUPLEX/ QUAD	ADAPTER COLOR	FIBER COUNT	PLATE HEIGHT	PLATE COLOR
SC						
FM003120	SC	SIMPLEX	AQUA	12F	LGX (118)	BLACK
FM003118	SC	SIMPLEX	BEIGE	12F	LGX (118)	BLACK
FM003242	SC	SIMPLEX	BLACK	12F	LGX (118)	BLACK
FM003122	SC	SIMPLEX	BLUE	12F	LGX (118)	BLACK
FM002842-TW	SC	SIMPLEX	BLUE	12F	LGX (118)	WHITE
FM003116	SC	SIMPLEX	GREEN	12F	LGX (118)	BLACK
FM000800-TW	SC	SIMPLEX	GREEN	12F	LGX (118)	WHITE
FM003411	SC	SIMPLEX	BEIGE	12F	LGX (170)	WHITE
FM003409	SC	SIMPLEX	BLUE	12F	LGX (170)	BLACK
FM003407	SC	SIMPLEX	BLUE	12F	LGX (170)	WHITE
FM003414	SC	SIMPLEX	GREEN	12F	LGX (170)	BLACK
FM003455	SC	SIMPLEX	GREEN	12F	LGX (170)	WHITE
FM003098	SC	SIMPLEX	AQUA	6F	LGX (118)	BLACK
FM003096	SC	SIMPLEX	BEIGE	6F	LGX (118)	BLACK
FM003403	SC	SIMPLEX	BEIGE	6F	LGX (118)	WHITE
FM003238	SC	SIMPLEX	BLACK	6F	LGX (118)	BLACK
FM003100	SC	SIMPLEX	BLUE	6F	LGX (118)	BLACK
FM003467	SC	SIMPLEX	BLUE	6F	LGX (118)	WHITE
FM003094	SC	SIMPLEX	GREEN	6F	LGX (118)	BLACK
FM000480	SC	SIMPLEX	GREEN	6F	LGX (118)	WHITE
FM000156	SC	SIMPLEX	BLUE	8F	LGX (118)	BLACK
FM003435	SC	SIMPLEX	BLUE	8F	LGX (118)	WHITE
FM002841	SC	SIMPLEX	GREEN	8F	LGX (118)	BLACK
FM000158	SC	SIMPLEX	GREEN	8F	LGX (118)	WHITE
LC						
FM001004	LC	DUPLEX	GREEN	12F	LGX (118)	WHITE
FM001303	LC	DUPLEX	AQUA	12F	LGX (118)	WHITE
FM003108	LC	DUPLEX	GREEN	12F	LGX (118)	BLACK
FM003110	LC	DUPLEX	BEIGE	12F	LGX (118)	BLACK
FM003112	LC	DUPLEX	AQUA	12F	LGX (118)	BLACK
FM001185	LC	QUAD	AQUA	12F	LGX (118)	BLACK
FM000297	LC	DUPLEX	BLUE	12F	LGX (170)	WHITE
FM000298	LC	DUPLEX	BLUE	12F	LGX (170)	BLACK
FM000301	LC	DUPLEX	GREEN	12F	LGX (170)	WHITE
FM000302	LC	DUPLEX	GREEN	12F	LGX (170)	BLACK
FM000838	LC	DUPLEX	BLUE	24F	LGX (118)	WHITE
FM000851	LC	DUPLEX	BEIGE	24F	LGX (118)	WHITE
FM000853	LC	DUPLEX	AQUA	24F	LGX (118)	WHITE
FM003069	LC	DUPLEX	GREEN	24F	LGX (118)	WHITE
FM001184	LC	QUAD	AQUA	24F	LGX (118)	BLACK
FM000129	LC	DUPLEX	BLUE	24F	LGX (170)	WHITE
FM000130	LC	DUPLEX	BLUE	24F	LGX (170)	BLACK
FM000338	LC	DUPLEX	GREEN	24F	LGX (170)	WHITE
FM000339	LC	DUPLEX	GREEN	24F	LGX (170)	BLACK
FM000348	LC	DUPLEX	BEIGE	24F	LGX (170)	WHITE
FM000349	LC	DUPLEX	BEIGE	24F	LGX (170)	BLACK
FM000289	LC	DUPLEX	BLUE	6F	LGX (118)	WHITE
FM000293	LC	DUPLEX	GREEN	6F	LGX (118)	WHITE
FM000294	LC	DUPLEX	GREEN	6F	LGX (118)	BLACK
FM003092	LC	DUPLEX	BLUE	6F	LGX (118)	BLACK

© 2010, AFL, all rights reserved. PP-2-00169, Revision 7, 2.22.17
Specifications are subject to change without notice.

LightLink Adapter Plates

Ordering Information (cont.)

AFL NO.	ADAPTER TYPE	SIMPLEX/DUPLEX/ QUAD	ADAPTER COLOR	FIBER COUNT	PLATE HEIGHT	PLATE COLOR
LC						
FM003240	LC	DUPLEX	BLACK	12F	LGX (118)	BLACK
FM003425	LC	DUPLEX	BLUE	12F	LGX (118)	WHITE
FM003465	LC	DUPLEX	BLUE	12F	LGX (118)	BLACK
FM003202	LC	DUPLEX	GREEN	24F	LGX (118)	BLACK
FM003204	LC	DUPLEX	BEIGE	24F	LGX (118)	BLACK
FM003206	LC	DUPLEX	AQUA	24F	LGX (118)	BLACK
FM003208	LC	DUPLEX	BLUE	24F	LGX (118)	BLACK
FM003244	LC	DUPLEX	BLACK	24F	LGX (118)	BLACK
FM003429	LC	DUPLEX	BEIGE	6F	LGX (118)	WHITE
ST						
FM003126	ST	SIMPLEX	METAL SM/MM	12F	LGX (118)	BLACK
FM003456	ST	SIMPLEX	METAL SM/MM	12F	LGX (118)	WHITE
FM000286	ST	SIMPLEX	METAL SM/MM	12F	LGX (170)	BLACK
FM000285	ST	SIMPLEX	METAL SM/MM	12F	LGX (170)	WHITE
FM003104	ST	SIMPLEX	METAL SM/MM	6F	LGX (118)	BLACK
FM003422	ST	SIMPLEX	METAL SM/MM	6F	LGX (118)	WHITE
FM003102	ST	SIMPLEX	METAL SM/MM	6F	LGX (118)	BLACK
FM003441	ST	SIMPLEX	METAL SM/MM	8F	LGX (118)	BLACK
FM003439	ST	SIMPLEX	METAL SM/MM	8F	LGX (118)	WHITE
FC						
FM000284	FC	SIMPLEX	METAL	12F	LGX (118)	BLACK
FM000283	FC	SIMPLEX	METAL	12F	LGX (118)	WHITE
FM003447	FC	SIMPLEX	METAL	12F	LGX (170)	BLACK
FM003446	FC	SIMPLEX	METAL	12F	LGX (170)	WHITE
FM003420	FC	SIMPLEX	METAL, GREEN DUST CAP	6F	LGX (118)	BLACK
FM003419	FC	SIMPLEX	METAL, GREEN DUST CAP	6F	LGX (118)	WHITE
FM003443	FC	SIMPLEX	METAL	8F	LGX (118)	BLACK
FM003442	FC	SIMPLEX	METAL	8F	LGX (118)	WHITE
MISC						
FM003210	HEYCO	SIMPLEX	BLACK	12F	LGX (118)	BLACK
FM003430	MTP	SIMPLEX	BLACK	36F	LGX (118)	BLACK
FM003212	HEYCO	SIMPLEX	BLACK	6F	LGX (118)	BLACK
FM003437	SC-ST HYBRID	SIMPLEX	BLUE-METAL	6F	LGX (118)	WHITE
FM001606	MTP	SIMPLEX	BLACK	72F	LGX (118)	BLACK
FM003005	MTP	SIMPLEX	BLACK	96F	LGX (118)	BLACK

© 2010, AFL, all rights reserved. PP-2-00169, Revision 7, 2.22.17
Specifications are subject to change without notice.

Field Master® Field-Installable Connectors

Field Master Connectors, for field-termination of fiber optics, feature high-precision, high-reliability and low-applied connector cost. Durable metal components, industry-standard connector designs, and proven crimp technology give the customer peace-of-mind that their installed network is steady and reliable. Field Master Tool Kits come complete with all necessary tools and consumables for the professional installation of Field Master Connectors.

Features

- High-precision ceramic ferrules ensure fiber alignment and repeatable performance
- Rugged metal connector bodies provide sturdy cable terminations
- Industry standard interfaces allow interoperability with media equipment
- Meets EIA/TIA 568B performance requirements
- Field proven crimp technology improves connector/cable tensile performance

Applications

- Premise environments
- Desk for LAN environments
- Patch panels
- Direct equipment termination
- Fiber to the Subscriber (FTTx) applications
- Repair / replacement requirements

Ordering Information

CONNECTOR	FIBER TYPE	BOOT COLOR	AFL NO.*
SC Field Master Connector (900 µm boot)	Multimode	Black	CS000308
SC Field Master Connector (3.0 mm boot)	Multimode	Beige	CS000309
SC Field Master Connector (900 µm & 3.0 mm boot)	Multimode	Black /Beige	CS005144
SC Field Master Connector (900 µm boot)	Single-mode	Blue	CS000310
SC Field Master Connector (3.0 mm boot)	Single-mode	Blue	CS000311
SC Field Master Connector (900 µm & 3.0 mm boot)	Single-mode	Blue	CS005145
ST Field Master Connector (900 µm boot)	Multimode	Black	CS000316
ST Field Master Connector (3.0 mm boot)	Multimode	Black	CS000317
ST Field Master Connector (900 µm & 3.0 mm boot)	Multimode	Black	CS005147
ST Field Master Connector (900 µm boot)	Single-mode	Blue	CS000318
ST Field Master Connector (3.0 mm boot)	Single-mode	Blue	CS000319
ST Field Master Connector (900 µm & 3.0 mm boot)	Single-mode	Blue	CS005148
LC Field Master Connector (900 µm boot)	Multimode	White	CS000320
LC Field Master Connector (2.0 mm boot)	Multimode	White	CS000321
LC Field Master Connector (900 µm boot)	Single-mode	Blue	CS000322
LC Field Master Connector (2.0 mm boot)	Single-mode	Blue	CS000323
LC Duplex Field Master Connector (2.0 mm boot)	Multimode	White	CS000467
LC Duplex Field Master Connector (2.0 mm boot)	Single-mode	Blue	CS000466

* Packaged 100 pieces per bag.

© 2002, AFL, all rights reserved. PP-2-00054, Revision 2.1, 5.17.11
Specifications are subject to change without notice.

Buffer Tube Fan-Out Kits, Indoor

12 F, 25-in legs

CORNING

Corning Cable Systems Indoor Buffer Tube Fan-Out Kits are specifically designed for the termination of 6- and 12-fiber buffer tubes. These buffer tube fan-out kits provide the ultimate solution for those users who want to field-install connectors on 250 µm coated fibers. The kits provide the most compact, easy-to-install fan-out solution requiring no additional hardware or space than that required for terminating tight-buffered cables. Indoor Kits feature a 900 µm Fan-Out Assembly that is color-coded to match the fiber color scheme. The Fan-Out Assembly is available with 6- or 12-fiber units in lengths of 0.6 m (25-in) or 1.2 m (47-in). These different lengths provide the installer the flexibility needed for a variety of hardware options.

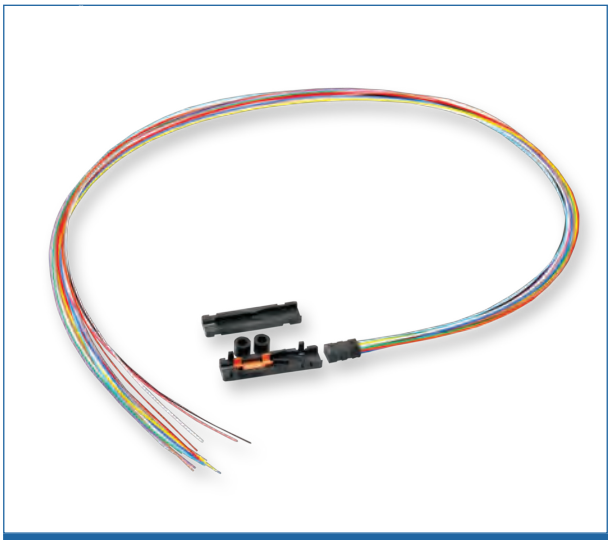

Part Number: FAN-BT25-12

Features and Benefits

Snap-together furcation
Eliminates epoxy for indoor kits

Fiber routing capabilities
Better fiber management

Compensation for wide temperature fluctuation
Outdoor use

Specifications

General Specifications	
Environment	Indoor
Fanout Type	Buffer Tube
Product Type	Fan-Out Kits

Temperature Range	
Operation	0 °C to 70 °C (32 °F to 158 °F)

CORNING

Buffer Tube Fan-Out Kits, Indoor

12 F, 25-in legs

CORNING

Design	
Cable Type	Cable with 250 µm fiber
Fiber Count	12
Fan-Out Tubing Color	Blue, Orange, Green, Brown, Slate, White, Red, Black, Yellow, Violet, Rose, Aqua

Mechanical Specifications - Fan-Out Kit	
Furcation Length	44.5 mm (1.75 in)
Tubing Length	635 mm (25 in)
Tubing Outer Diameter	0.9 mm

Chemical Characteristics	
RoHS	Free of hazardous substances according to RoHS 2002/95/EG

Ordering Information

Part Number	FAN-BT25-12
Product Description	Buffer Tube Fan-Out Kit, indoor, 12 F, 25-in legs

Shipping Information

Units per Delivery	1/1
Package Contents	Fan-out top, fan-out bottom, insert with fan-out tubing

RoHS COMPLIANT

Corning Cable Systems LLC • PO Box 489 • Hickory, NC 28603-0489 USA
800-743-2675 • FAX: 828-325-5060 • International: +1-828-901-5000 • www.corning.com/cablesystems
A complete listing of the trademarks of Corning Cable Systems is available at www.corning.com/cablesystems/trademarks.
Corning Cable Systems is ISO 9001 certified. © 2012 Corning Cable Systems. All rights reserved.

JOB NAME: Kirtland Air Force Base BFF Conveyance Line
COA JOB NO: 586082
PROJECT MANAGER: Joe Martinez, RCDD

Special System: Fiber Optic Data Transmission System

Part III: Certificates

1. Telecom Contractor
2. Key Personnel

STATE OF NEW MEXICO

CONSTRUCTION INDUSTRIES DIVISION

WILSON ELECTRIC SERVICES CORP

LICENSE NUMBER

88792

Qualifying Party(S)

MC CLURE WES

EXPIRES

06/30/2018

CLASSIFICATION(S)

EE98

DIRECTOR

This card is the property of the CID and shall be surrendered upon demand

Building Industry Consulting Service International

THE PROFESSIONAL DESIGNATION OF

REGISTERED COMMUNICATIONS DISTRIBUTION DESIGNER®

IS AWARDED TO

Joe M Martinez

by BICSI in recognition of having successfully completed BICSI's registration and examination requirements.

Designation Number: 183097R

Registration Start Date: 12/31/2015

Registration End Date: 12/31/2018

Bicsi RCDD

Since

8/5/2006

Chair, Registrations & Credentials Supervision Committee

Director of Credentialing

Building Industry Consulting Service International

THE PROFESSIONAL DESIGNATION OF

BICSI TECHNICIAN

IS AWARDED TO

Christopher W Davis

by BICSI in recognition of having successfully completed BICSI's registration and examination requirements.

Designation Number: 181398T

Registration Start Date: 8/1/2015

Registration End Date: 8/1/2018

Bicsi TECHNICIAN

Since
8/1/2015

Chair, Registrations & Credentials Supervision Committee

Director of Credentialing

Curley, Tyler

From: Jercinovic, Devon
Sent: Wednesday, September 27, 2017 3:22 PM
To: Simpler, Trent SPA (Trent.Simpler@usace.army.mil); Amy Sanchez; carlos.f.salazar@usace.army.mil; Linda Dreeland; mark.j.phaneuf@usace.army.mil
Cc: Curley, Tyler; McKeage, Kevin
Subject: FW: KAFB 106239 Conveyance Line (COA Proj. No. 586082)

USACE TEAM,

Just catching you up on the email trail between George Nemeth (EOR with Smith Engineering our sub) and COA DRC.

Good news is as-builts will cover field change, not formal change needed with COA DRC approval.

RMCI (EA sub) is evaluating the options. I will hopefully have answer tomorrow and assume they will chose HDD….but we will see.

Devon E. Jercinovic, PG, PMP
EA Engineering, Science, and Technology, Inc., PBC
Program Manager II
320 Gold Ave. SW, Suite 1300
Albuquerque, NM 87102
Cell: 505.401.1181
Office: 505.715.4248
Email: djercinovic@eaest.com
www.eaest.com

From: Wolfenbarger, Jeanne [mailto:jwolfenbarger@cabq.gov]
Sent: Wednesday, September 27, 2017 3:16 PM
To: 'George Nemeth' <georgen@smithengineering.pro>; Cynova Tim <TCynova@abcwua.org>
Cc: Jercinovic, Devon <djercinovic@eaest.com>; Ortega J. Reuben <rjortega@abcwua.org>
Subject: RE: KAFB 106239 Conveyance Line (COA Proj. No. 586082)

Let us know what your plan is based on Tim's comments. Mark it on the drawing. Thanks!

Jeanne Wolfenbarger, P.E.
Manager for Design Review & Construction
City of Albuquerque
(505)924-3993

From: George Nemeth [mailto:georgen@smithengineering.pro]
Sent: Wednesday, September 27, 2017 3:13 PM
To: Cynova Tim; Wolfenbarger, Jeanne
Cc: Jercinovic, Devon; Ortega J. Reuben
Subject: RE: KAFB 106239 Conveyance Line (COA Proj. No. 586082)

Thanks for the feedback Tim. We'll keep you posted on the actual installation and it will certainly be as-built.

George Nemeth, P.E.

Vice President / Project Manager
georgen@smithengineering.pro
Smith Engineering Company
Solutions for Today... Vision for Tomorrow
www.smithengineering.pro
Office: 505.884.0700 Direct: 505.314.5593
2201 San Pedro Drive NE, Bldg 4 Suite 200, Albuquerque, NM 87110

From: Cynova, Tim F. [mailto:tcynova@abcwua.org]
Sent: Wednesday, September 27, 2017 3:06 PM
To: Wolfenbarger, Jeanne <jwolfenbarger@cabq.gov>; 'George Nemeth' <georgen@smithengineering.pro>
Cc: Jercinovic, Devon <djercinovic@eaest.com>; Ortega, Reuben J. <rjortega@abcwua.org>
Subject: RE: KAFB 106239 Conveyance Line (COA Proj. No. 586082)

George, good to see you are busy.

For going over the SAS with a flexible pipe material flow fill will need to be used see Drw. 2381 The flow fill would distribute the point load across the SAS line.
For going under and excavating around the SAS line usually an encasement works to keep any sag from poor backfill, (Drw 2140), But if sometimes if the trench is narrow flow fill will
work as long as it is under the line filling the void supporting against natural ground.
For directional drilling under, as long as the void is filled with mud.

Let me know if you have questions.

Tim Cynova, PE
Senior Engineer
Utility Development Section
Albuquerque Bernalillo County Water Utility Authority
600 2nd St. NW
Albuquerque, NM 87103s used under thes uesd under
Office: (505) 289-3040

From: Wolfenbarger, Jeanne [mailto:jwolfenbarger@cabq.gov]
Sent: Wednesday, September 27, 2017 2:38 PM
To: 'George Nemeth' <georgen@smithengineering.pro>
Cc: Jercinovic, Devon <djercinovic@eaest.com>; Cynova, Tim F. <tcynova@abcwua.org>
Subject: RE: KAFB 106239 Conveyance Line (COA Proj. No. 586082)

I will let Tim Cynova weigh in on this. Thanks.

Jeanne Wolfenbarger, P.E.
Manager for Design Review & Construction
City of Albuquerque
(505)924-3993

From: George Nemeth [mailto:georgen@smithengineering.pro]
Sent: Wednesday, September 27, 2017 2:22 PM
To: Wolfenbarger, Jeanne
Cc: Jercinovic, Devon; Cynova Tim
Subject: RE: KAFB 106239 Conveyance Line (COA Proj. No. 586082)

Jeanne – Thanks for the feedback. RMCI had contacted Reuben Ortega with ABCWUA and Reuben contacted me.

The proposed installation would only have a couple of inches between the top of the existing SAS and the bottom of encasement. That would put us at absolute minimum cover.

Right now, regarding the sewer line crossing at about Sta 5+35, the contractor is weighing the pros and cons of three installation options.

1. installing per plan and going under the existing SAS and supporting the SAS across the trench,
2. realigning vertically to go over the SAS,
3. or performing a short directional drill to go under the SAS and avoid an open trench where the SAS would need to be supported.

I'll keep you posted on a final decision.

Thanks again.

George Nemeth, P.E.
Vice President / Project Manager
georgen@smithengineering.pro
Smith Engineering Company
Solutions for Today... Vision for Tomorrow
www.smithengineering.pro
Office: 505.884.0700 Direct: 505.314.5593
2201 San Pedro Drive NE, Bldg 4 Suite 200, Albuquerque, NM 87110

From: Wolfenbarger, Jeanne [mailto:jwolfenbarger@cabq.gov]
Sent: Wednesday, September 27, 2017 1:44 PM
To: 'George Nemeth' <georgen@smithengineering.pro>
Cc: 'Jercinovic, Devon' <djercinovic@eaest.com>; Cynova Tim <TCynova@abcwua.org>
Subject: FW: KAFB 106239 Conveyance Line (COA Proj. No. 586082)

George

Mostly, I have no issue with the changes, and they can be handled by as-built. I am ccing Tim Cynova of the ABCWUA to review the alignment changes based on discussion below.

Who at the ABCWUA asked for the full encasement on the SAS? (We don't typically place a line directly on top of an encasement so some type of clearance might be requested. Are you right at minimum cover?)

Jeanne Wolfenbarger, P.E.
Manager for Design Review & Construction
City of Albuquerque
(505)924-3993

From: George Nemeth [mailto:georgen@smithengineering.pro]
Sent: Tuesday, September 26, 2017 1:27 PM
To: Wolfenbarger, Jeanne
Cc: Jercinovic, Devon; Curley, Tyler; McKeage, Kevin
Subject: KAFB 106239 Conveyance Line (COA Proj. No. 586082)

Jeanne – Per our phone conversation earlier today, I am sending you the attached documents.

The first 4 sheets (C-201, C-202, C-205, C-206) show the changes in vertical and horizontal alignment of the pipeline as well as additional lengths of direction drill installation instead of open trench installation.

Also, as shown on sheet C-202, ABCWUA has required a full encasement of the existing SAS line for 10 feet to each side of the crossing point. The encasement detail is included as the 5th sheet in the attachment.

Please let me know if we need to make a formal submittal to DRC and obtain formal DRC approval of these changes or if we can just as-built the changes.

Thanks.

George Nemeth, P.E.
Vice President / Project Manager
georgen@smithengineering.pro
Smith Engineering Company
Solutions for Today... Vision for Tomorrow
www.smithengineering.pro
Office: 505.884.0700 Direct: 505.314.5593
2201 San Pedro Drive NE, Bldg 4 Suite 200, Albuquerque, NM 87110

Curley, Tyler

From: Curley, Tyler
Sent: Friday, September 29, 2017 12:09 PM
To: 'Phillip Johnson'
Cc: Ed Hyde; Jerry Patton; Jercinovic, Devon; McKeage, Kevin
Subject: RE: KAFB Conveyance Line; Vertical Alignment Change

Phillip,

EA acknowledges that the trench depth will be adjusted in field to maintain slope while preventing asphalt damage as well as low spots in the line resulting from HDD under the road.

Thank you,
Tyler

From: Phillip Johnson [mailto:pjohnson@rmciinc.com]
Sent: Thursday, September 28, 2017 3:49 PM
To: Curley, Tyler <tcurley@eaest.com>
Cc: Ed Hyde <ehyde@rmciinc.com>; Jerry Patton <jpatton@rmciinc.com>
Subject: KAFB Conveyance Line; Vertical Alignment Change

Tyler,

This email is to document that vertical alignment changes are going to occur in the field to reduce the impact on the asphalt replacement on City Right-of-Way. RMCI and EA Engineering will work together in the field to determine the best vertical alignment to suit the needs of the project. These vertical alignment changes are to prevent large amounts of asphalt replacement in the City of Albuquerque Right-of-Way and to prevent having deeper excavations near the roadway. By making these field changes, RMCI and EA will prevent excessive asphalt replacement, larger amounts of import materials and prevent any additional safety concerns with large excavations so close to the roadway. Please note by making these field changes, that there will be the potential for low spots (although these will be tried to be mitigated) along the pipeline and for the directional drilling locations. RMCI and EA will make field determinations to mitigate these low points as much as possible. RMCI will as-built these changes at the end of the project for project record. RMCI and EA will also coordinate to make sure the minimum bury requirements are met as well.

Please respond to this email documenting that this is correct. After receipt of the response, RMCI will document this through a formal RFI.

Thanks,

Phillip Johnson
Project Manager
RMCI, Inc.
505-345-0008 (office)
505-345-0111 (fax)

505-235-1850 (cell)

Curley, Tyler

From: SANCHEZ, AMY ELIZABETH CIV USARMY CESPA (US) <Amy.E.Sanchez@usace.army.mil>
Sent: Wednesday, October 18, 2017 10:09 AM
To: McKeage, Kevin
Cc: Jercinovic, Devon; Curley, Tyler; Simpler, Trent W CIV USARMY CESPA (US); Salazar, Carlos F CIV USARMY CESPA (US); Dreeland, Linda E CIV USARMY CESPA (US); Phaneuf, Mark J CIV USARMY CESPA (US)
Subject: RE: Kirtland BFF - Field Change: KAFB-106228 Conduit Reroute

Kevin,

Wilson Electric's attached plan to reroute the conduit is approved.

Thanks,

Amy Sanchez, COR
USACE Albuquerque District
505-342-3234

-----Original Message-----
From: McKeage, Kevin [mailto:kmckeage@eaest.com]
Sent: Wednesday, October 18, 2017 8:57 AM
To: Simpler, Trent W CIV USARMY CESPA (US) <Trent.Simpler@usace.army.mil>; SANCHEZ, AMY ELIZABETH CIV USARMY CESPA (US) <Amy.E.Sanchez@usace.army.mil>; Salazar, Carlos F CIV USARMY CESPA (US) <Carlos.F.Salazar@usace.army.mil>; Dreeland, Linda E CIV USARMY CESPA (US) <Linda.E.Dreeland@usace.army.mil>; Phaneuf, Mark J CIV USARMY CESPA (US) <Mark.J.Phaneuf@usace.army.mil>
Cc: Jercinovic, Devon <djercinovic@eaest.com>; Curley, Tyler <tcurley@eaest.com>
Subject: [EXTERNAL] Kirtland BFF - Field Change: KAFB-106228 Conduit Reroute

USACE Team,

During potholing EA discovered that the electric and controls conduit for KAFB-106228 is located on top of the existing dual wall conveyance line. As a result EA's KAFB-106239 conveyance line installation subcontractors will not be able to maneuver equipment in and around the existing line to tie into the existing conveyance line without rerouting the conduit. EA has reviewed Wilson Electric's plan to reroute the conduit (attached) and would like to obtain USACE approval prior to conducting this field change. Please let us know if you have any questions.

Thank you,

Kevin McKeage, E.I.

Engineer

Cell: (316) 765-1486

Office: (505) 933-6417

kmckeage@eaest.com

EA Engineering, Science, and Technology, Inc., PBC

320 Gold Ave, Suite. 1300

Albuquerque, NM 87102

Blockedwww.eaest.com

APPENDIX C

Record Drawings

(Provided on compact disc)

- **Attachment 1: As-Builts City of Albuquerque Right-of-way**
- **Attachment 2: As-Builts Complete**
- **Attachment 3: KAFB-106239 Completion Diagram**
- **Attachment 4: Surveys**

KIRTLAND AIR FORCE BASE
BULK FUELS FACILITY
KAFB - 106239 CONVEYANCE LINE

(NON-POTABLE PRIVATE WATER LINE)

COA PROJECT NO. 586082

MAY 3, 2017

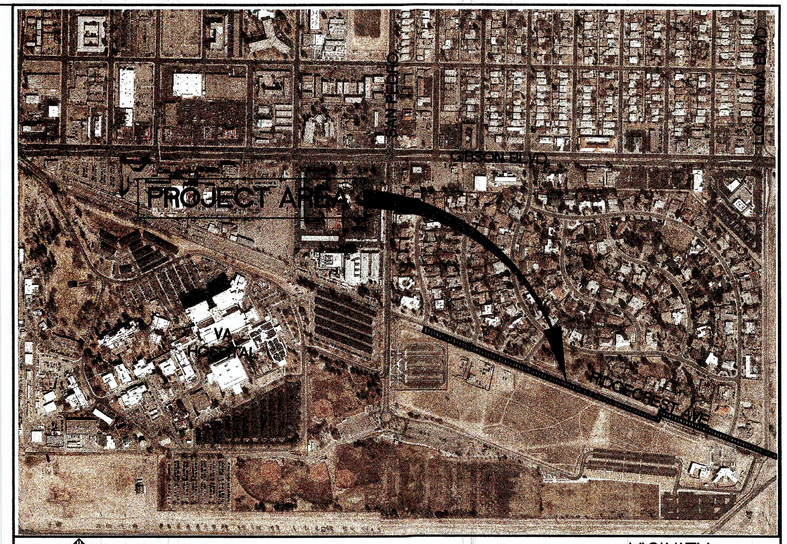

N

S.E. ALBUQUERQUE N.M.

VICINITY MAP
N.T.S.

Sheet Index		FOR INFO. ONLY
Sheet Number	Sheet Title	DRC NUMBER
G-101	PROJECT COVER SHEET	1 OF 27
G-102	GENERAL NOTES	2 OF 27
V-101	TOPOGRAPHIC AND UTILITY SURVEY COVER SHEET	3 OF 27
V-102	TOPOGRAPHIC AND UTILITY SURVEY	4 OF 27
V-103	TOPOGRAPHIC AND UTILITY SURVEY	5 OF 27
V-104	TOPOGRAPHIC AND UTILITY SURVEY	6 OF 27
V-105	TOPOGRAPHIC AND UTILITY SURVEY	7 OF 27
V-106	TOPOGRAPHIC AND UTILITY SURVEY	8 OF 27
C-101	REMOVAL SHEET (BOP) STA :0+00 TO STA 9+00	9 OF 27
C-102	REMOVAL SHEET STA :9+00 TO STA: 18+00	10 OF 27
C-103	REMOVAL SHEET STA :18+00 TO STA: 26+25.60 (EOP)	11 OF 27
C-201	PLAN & PROFILE (BOP) STA: 0+00 TO STA: 4+50	12 OF 27
C-202	PLAN & PROFILE STA: 4+50 TO STA: 9+00	13 OF 27
C-203	PLAN & PROFILE STA: 9+00 TO STA: 13+50	14 OF 27
C-204	PLAN & PROFILE STA: 13+50 TO STA: 18+00	15 OF 27
C-205	PLAN & PROFILE STA: 18+00 TO STA: 22+50	16 OF 27
C-206	PLAN & PROFILE STA: 22+50 TO STA: 26+25.60 (EOP)	17 OF 27
C-301	CIVIL DETAILS	18 OF 27
C-302	CIVIL DETAILS	19 OF 27
C-401	ELECTRICAL EQUIPMENT YARD ENLARGED PLAN	20 OF 27
E-000	SYMBOLS & LEGENDS	21 OF 27
E-001	GENERAL NOTES	22 OF 27
E-201	ELECTRICAL PLAN	23 OF 27
E-301	WELL VAULT SECTION	24 OF 27
E-501	TRANSFORMER & EQUIPMENT RACK DETAIL	25 OF 27
E-502	DETAILS	26 OF 27
E-601	ONE-LINE DIAGRAM	27 OF 27

SMITH ENGINEERING COMPANY
2201 SAN PEDRO NE BLDG 4, SUITE 200
ALBUQUERQUE, NM 87110

SURVEYOR'S CERTIFICATION

I, Joseph M. Solomon, Jr., a duly qualified Licensed Professional Surveyor under the laws of the State of New Mexico, do hereby certify; that the "as-built" information shown on these drawings was obtained from field construction and "as-built" surveys performed by me or under my supervision; that the "as-built" information shown on these drawings was added by me or under my supervision; and that this "as-built" information is true and correct to the best of my knowledge and belief. I am not responsible for any of the design concepts, calculations, engineering, or intent of the record drawings. This certification is limited to items designated by the revision number above.

JOSEPH M. SOLOMON, JR.
NMPS NO. 15075

JOSEPH M. SOLOMON, JR. NEW MEXICO 15075 REGISTERED PROFESSIONAL SURVEYOR

3/15/2018
DATE

I, Tyler Curley of the firm EA Engineering, Science, and Technology, Inc., PBC, a Registered Professional Engineer in the State of New Mexico, do hereby certify, to the best of my knowledge and belief, that the infrastructure installed as shown on these drawings has been inspected by me or by a qualified person under my direct supervision and has been constructed in accordance with the plans and specifications approved by the City Engineer and the original design intent of the approved plans has been met, except as noted by me on the as-built construction drawings. This Certification is based on site inspections by me or personnel under my direction and survey information provided by Joseph M. Solomon, JR., NMPS number 15075 with High Mesa Consulting Group.

TYLER J CURLEY NEW MEXICO 23885 PROFESSIONAL ENGINEER

3-15-18

RECORD DRAWINGS

811 Know what's below. Call before you dig. It's the Law!
New Mexico One Call, Inc. NMOC

UTILITY COMPANY CONTACTS

ALBUQUERQUE BERNALILLO COUNTY WATER UTILITY AUTHORITY (WATER & SEWER)
TOM MATTHEWS, PE
Senior Engineer
P.O. Box 568
Albuquerque, New Mexico 87103
(505) 289-3029
tmatthews@abcwua.org

PNM-ELECTRIC
DEREK KASTENDIECK
Distribution Engineer
Commercial/Industrial Services & System Reliability
4201 Edith Blvd., NE MS-ES61
Albuquerque, New Mexico 87107
(505) 241-3631
derek.kastendieck@pnm.com

NEW MEXICO GAS COMPANY
PAULA McAFEE
Project Engineer
4625 Edith Blvd., NE
Albuquerque, New Mexico 87107
(505) 697-6808
pymcafee@tecoenergy.com

CENTURY LINK
ROSARITO KNIFFIN
NM Engineering/Planning
4301 Bogan Ave NE
Albuquerque, New Mexico 87109
(505) 767-7450
rosarito.kniffin@centurylink.com

AT&T
SEAN KELLY
Manager, Network Services
New Mexico
(505) 842-2838
sk1561@att.com

COMCAST CABLE
MIKE MORTUS
Construction Coordinator
Central New Mexico/Mountain West Region
8440 Washington St NE
Albuquerque, NM 87113
(505) 271-3644
mike_mortus@cable.comcast.com

CITY LINK
505 Marquette Ave. NW, Suite 1820
Albuquerque, New Mexico 87102
(505) 938-6300

WINDSTREAM COMMUNICATIONS
RICK MUELLER
Supervisor of Outside Techs.
505 Marquette Ave. NW, Suite 1600
Albuquerque, New Mexico 87102
(505) 217-0038

LEVEL 3 COMMUNICATIONS, LLC
JOHN HUFNAGEL
Outside Plant Engineer II
3830 Singer Blvd NE, Suite 2000
Albuquerque, NM 87109
(505) 938-7322
john.hufnagel@level3.com

VERIZON/MCI
MATT STURGIS
Senior Technician
Mountain States Territory
6001 Midway Park NE
Albuquerque, New Mexico 87109
(505) 348-8613
m.sturgis@verizon.com

REV.	SHEETS	CITY ENGINEER	DATE	USER DEPARTMENT	DATE	USER DEPARTMENT	DATE

ENGINEERS STAMP & SIGNATURE

GEORGE NEMETH NEW MEXICO 12284 REGISTERED PROFESSIONAL ENGINEER

5-3-17

APPROVED	ENGINEER	DATE
DRC Chairman		5/19/17
Transportation		5/18/17
Water/Wastewater		5-18-17
Hydrology		5-18-17
C I P		
Constr. Mngmt.		
Constr. Coord.		

6/8/17
CITY ENGINEER DATE

City Project No.	Zone Map No.	Drawing No.	Sheet
586082	M-18		1 OF 27 G-101

GENERAL NOTES:

1 SEVEN (7) WORKING DAYS PRIOR TO BEGINNING CONSTRUCTION, THE CONTRACTOR WILL SUBMIT A DETAILED CONSTRUCTION SCHEDULE TO THE CITY CONSTRUCTION COORDINATION DIVISION. TWO (2) WEEKS PRIOR TO CONSTRUCTION, THE CONTRACTOR SHALL SUBMIT A TRAFFIC CONTROL PLAN TO THE ENGINEER FOR APPROVAL.

2 THE CONTRACTOR WILL NOTIFY THE FIELD ENGINEER NOT LESS THAN SEVEN (7) DAYS PRIOR TO STARTING WORK, IN ORDER THAT THE COA SURVEYOR MAY TAKE NECESSARY MEASURES TO ENSURE THE PRESERVATION OF SURVEY MONUMENTS. THE CONTRACTOR WILL NOTIFY THE COA SURVEYOR IF A MONUMENT IS DISTURBED. REPLACEMENT WILL BE DONE ONLY BY THE CITY OF ALBUQUERQUE SURVEYOR. WHEN A CHANGE IS MADE IN THE FINISHED ELEVATION OF THE PAVEMENT OF ANY ROADWAY IN WHICH A PERMANENT SURVEY MONUMENT IS LOCATED, CONTRACTOR WILL, AT HIS OWN EXPENSE, HAVE THE COA SURVEYOR SECTION ADJUST THE MONUMENT COVER TO THE NEW GRADE UNLESS OTHERWISE SPECIFIED. REFER TO SECTION 4 OF SPECIFICATIONS.

3 THE SPECIFICATIONS USED FOR THIS PROJECT ARE THE CITY OF ALBUQUERQUE STANDARD SPECIFICATIONS FOR PUBLIC WORKS CONSTRUCTION, 1986 EDITION THROUGH UPDATE NO. 9 INCLUDING ALL SUBSEQUENT UPDATES AND AMENDMENTS.

4 ALL NEW MANHOLES SHALL BE TYPE "C" PER CITY OF ALBUQUERQUE STANDARD DRAWINGS 2101 UNLESS OTHERWISE NOTED ON THE PLANS. ALL MANHOLES SHALL INCLUDE PLACEMENT OF EMD'S.

5 THE CONTRACTOR WILL BE RESPONSIBLE FOR DISPOSING OF ALL DEBRIS, INCLUDING, BUT NOT LIMITED TO HAZARDOUS WASTE AT DISPOSAL SITES APPROVED BY GOVERNMENTAL AGENCIES REGULATING THE DISPOSAL OF SUCH MATERIALS.

6 ALL EXISTING WATER VALVE BOXES AND MANHOLES IN THE STREET CONSTRUCTION ARE TO BE ADJUSTED TO FINISH GRADE AND WILL BE MEASURED AND PAID PER EACH. ADJUSTMENT WORK SHALL INCLUDE EMD, NEW CONCRETE COLLAR, NEW RING AND COVER.

7 SUBGRADE PREPARATION UNDER SIDEWALKS AND DRIVE PADS, AND SUBGRADE AND SUBBASE PREPARATION UNDER CURB AND GUTTER IS CONSIDERED INCIDENTAL TO THE CONSTRUCTION OF SUCH, AND NO DIRECT PAYMENT SHALL BE MADE FOR THOSE ITEMS OF WORK.

8 ALL EXCAVATION WILL BE GOVERNED BY FEDERAL, STATE AND LOCAL LAWS, RULES, AND REGULATIONS CONCERNING CONSTRUCTION SAFETY AND HEALTH.

9 ALL SIGNS AND PAVEMENT MARKINGS WILL BE IN ACCORDANCE WITH THE "MANUAL ON UNIFORM TRAFFIC CONTROL DEVICES FOR STREETS AND HIGHWAYS" CURRENT EDITION PUBLISHED BY THE U.S. DEPARTMENT OF TRANSPORTATION.

10 THE CONTRACTOR IS TO EXERCISE CARE TO AVOID DISTURBING ANY EXISTING UNDERGROUND UTILITIES. IT WILL BE HIS RESPONSIBILITY TO COORDINATE WITH THE UTILITY COMPANIES IN ORDER TO PREVENT ANY SERVICE DISRUPTION. SEE SECTION 18 "UTILITIES", CITY OF ALBUQUERQUE, STANDARD SPECIFICATIONS FOR CONTRACTOR REQUIREMENTS.

11 WHEN ABUTTING NEW PAVEMENT TO EXISTING PAVEMENT, SAW CUT EXISTING PAVEMENT TO A STRAIGHT LINE AND AT RIGHT ANGLES AND REMOVE ANY BROKEN OR CRACKED PAVEMENT. NO DIRECT PAYMENT WILL BE MADE FOR SAW CUTTING.

12 ALL GAS VALVES, GAS MANHOLES, ELECTRICAL MANHOLES, TELEPHONE MANHOLES, AND UTILITY POLES WILL BE ADJUSTED TO GRADE BY EACH UTILITY COMPANY. CONTRACTOR WILL COORDINATE THROUGH CITY UTILITY COORDINATOR.

13 WHEN REMOVAL OF EXISTING CURB AND GUTTER OR SIDEWALK IS REQUIRED, REMOVE BACK TO NEAREST SUITABLE JOINT UNLESS OTHERWISE DIRECTED BY THE CONSTRUCTION ENGINEER.

14 THE CONTRACTOR WILL NOTIFY NEW MEXICO ONE CALL SYSTEM (260-1990).

15 CONTRACTOR WILL PLACE BITUMINOUS MATERIAL WITH THE USE OF A LAYDOWN MACHINE WHERE PAVEMENT IS 8 FEET IN WIDTH OR WIDER.

16 CONTRACTOR WILL NOT PAVE OVER ANY SURFACE FEATURE, I.E., GAS VALVE, MANHOLE COVER, ETC.

17 CONTRACTOR WILL CONFINE HIS WORK WITHIN THE CONSTRUCTION EASEMENT LIMITS AND/OR RIGHT-OF-WAY, OR PROVIDE COPIES OF AGREEMENTS WITH ADJACENT LANDOWNERS TO THE CITY OF ALBUQUERQUE.

18 MINIMUM BOTTOM WIDTH OF TRENCHES FOR RIGID PIPE SHALL BE EQUAL TO THE OUTSIDE DIAMETER PLUS 24 INCHES. BEDDING MATERIAL SHALL BE CLASS II, III, OR IV UNLESS OTHERWISE SPECIFICALLY NOTED ON THE PLANS.

19 MINIMUM BOTTOM WIDTH OF TRENCHES FOR NON-RIGID PIPE SHALL BE EQUAL TO THE OUTSIDE DIAMETER PLUS 18 INCHES. BEDDING MATERIAL SHALL BE CLASS I, II, OR III.

20 THE CONTRACTOR AGREES TO TAKE NECESSARY SAFETY PRECAUTIONS AS REQUIRED BY FEDERAL, STATE AND LOCAL AUTHORITIES TO PROTECT PEDESTRIAN AND VEHICULAR TRAFFIC IN THE CONSTRUCTION AREA, WHICH INCLUDE BUT ARE NOT LIMITED TO: MAINTAINING ADEQUATE WARNING SIGNS, BARRICADES, LIGHTS, GUARD FENCES, WALKS AND BRIDGES.

21 THE CONTRACTOR SHALL CONSTRUCT CITY OF ALBUQUERQUE STANDARD WHEELCHAIR RAMPS THAT CONFORM TO CURRENT ADA REQUIREMENTS.

22 PRIOR TO CONSTRUCTION, THE CONTRACTOR WILL EXCAVATE AND VERIFY THE HORIZONTAL AND VERTICAL LOCATIONS OF ALL POTENTIAL CONFLICTING UTILITIES. SHOULD A CONFLICT EXIST BETWEEN THE FIELD INFORMATION AND THE PLANS, THE CONTRACTOR WILL NOTIFY THE ENGINEER SO THE CONFLICT CAN BE RESOLVED WITH MINIMUM AMOUNT OF DELAY.

23 THE REPLACEMENT OF THE EXISTING UTILITIES AND THE INSTALLATION OF NEW UTILITY LINES WILL BE COMPLETED IN ADVANCE OF STARTING THE PAVEMENT WORK. TEMPORARY PAVEMENT WILL BE PLACED IN ALL TRENCHES REQUIRED FOR THE UTILITY REPLACEMENTS IN THOSE AREAS THAT MUST MAINTAIN TRAFFIC UNTIL THE FINAL PAVEMENT WORK STARTS IN EACH AREA. TEMPORARY STRIPING SHALL BE THE CONTRACTOR'S RESPONSIBILITY. MAINTENANCE OF THE TEMPORARY PAVING AND STRIPING WILL BE AT THE CONTRACTOR'S EXPENSE.

24 TACK COAT FOR SURFACE COURSE REQUIREMENTS WILL BE DETERMINED BY THE CONSTRUCTION ENGINEER.

25 BACKFILL COMPACTION SHALL BE ACCORDING TO SPECIFIED USE.

26 ALL NEW PAVING, DRIVEWAYS, SIDEWALKS, AND CURB AND GUTTERS, ABUTTING EXISTING AREAS SHALL MATCH THE ELEVATION OF THOSE AREAS.

27 PERMANENT PAVEMENT STRIPING AND MARKINGS WILL BE PLACED BY THE CONTRACTOR. ROAD SHALL NOT BE OPENED TO TRAFFIC UNTIL IT IS STRIPED. ALL STRIPING, PAVEMENT MARKINGS INCLUDING CROSSWALKS, ARROWS AND LINE MARKINGS ARE TO BE CONSTRUCTED OF PAINT IN ACCORDANCE WITH THE MANUAL ON UNIFORM TRAFFIC CONTROL DEVICES.

28 ALL EXCAVATED MATERIAL THAT IS NOT REQUIRED TO BE REUSED MUST BE REMOVED FROM THE PROJECT AREA WITHIN FOUR DAYS OF EXCAVATION. SPOIL PILES WILL BE ALLOWED ONLY AS DIRECTED BY THE ENGINEER.

29 THE CONTRACTOR WILL COORDINATE THE CONSTRUCTION ACTIVITIES WITH ALL OTHER CONTRACTORS AND UTILITY COMPANIES WORKING IN THE SAME AREA. THE CONTRACTOR MAY BE REQUIRED TO RESCHEDULE THEIR ACTIVITIES TO ALLOW UTILITY CREWS TO PERFORM THEIR REQUIRED WORK. NO ADDITIONAL COMPENSATION WILL BE ALLOWED FOR DELAYS OR INCONVENIENCE CAUSED BY UTILITY COMPANY WORK CREWS. A CONTRACT EXTENSION MAY BE ALLOWED AS DELINEATED IN CITY OF ALBUQUERQUE STANDARD SPECIFICATIONS.

30 EXISTING CURB AND GUTTER, NOT DISTURBED BY CONTRACTOR, BUT OUT OF ALIGNMENT, DISPLACED VERTICALLY, BADLY BROKEN AND/OR DETERIORATED, WILL BE REPLACED AS DIRECTED BY THE CONSTRUCTION ENGINEER AND PAID FOR AT CONTRACT UNIT PRICES.

31 ALL TRAFFIC CONTROL DEVICES REQUIRED FOR DRIVEWAY CLOSURES, UTILITY CONSTRUCTION OR FOR OTHER REASONS AND NOT SHOWN ON THE SIGNING PLANS WILL BE FURNISHED BY THE CONTRACTOR. PRIOR TO PLACING THE TRAFFIC CONTROL DEVICES, THE CONTRACTOR WILL NOTIFY THE AFFECTED OWNERS IN ACCORDANCE WITH THE SPECIFICATIONS. CONTRACTOR MUST MAKE PROVISIONS TO PROVIDE ACCESS TO PROPERTIES. REFER TO SECTION 19 OF THE SPECIFICATIONS.

32 ALL UTILITY LINES WHICH ARE NOT SPECIFICALLY DESIGNATED TO BE REMOVED AND REPLACED ON THE PLANS, WILL BE MAINTAINED IN SERVICE. SHORING, SHEETING AND OTHER MEANS OF SUPPORT SHALL BE EMPLOYED BY THE CONTRACTOR TO PREVENT DAMAGE OR LOSS OF THESE EXISTING UTILITIES. BEAM AND CABLE OR OTHER ADEQUATE SUPPORTS WILL BE USED FOR TEMPORARY SUPPORT OF ALL UTILITY LINES WHICH CROSS THE TRENCH. ANY DAMAGE TO EXISTING UTILITIES WILL IMMEDIATELY AND WITHOUT DELAY BE REPAIRED AT THE CONTRACTOR'S EXPENSE. THE CONTRACTOR WILL NOTIFY THE ENGINEER IMMEDIATELY OF ANY SIGNIFICANT DEVIATION OF EXPOSED UTILITIES FROM THE LOCATIONS SHOWN ON THE PLANS SO THAT CONFLICTS CAN BE RESOLVED IN A TIMELY MANNER.

33 THE CONTRACTOR WILL ASSUME RESPONSIBILITY FOR ANY DAMAGE TO EXISTING COA AND EXPO NEW MEXICO INFRASTRUCTURE (C & G, PAVING, ETC.) DURING CONSTRUCTION, APART FROM THOSE SECTIONS INDICATED FOR REMOVAL ON THE PLANS, AND WILL REPAIR OR REPLACE SAME AT HIS OWN EXPENSE. HE WILL SUITABLY PROTECT THE CURB AND GUTTER FROM INCIDENTAL SPLASHING DURING THE TACK COAT APPLICATION AND WILL BE RESPONSIBLE FOR CLEANING SAME AT HIS OWN COST SHOULD SPLASHING OCCUR.

34 ALL INTERFERING PORTIONS OF ABANDONED UTILITY LINES WHICH ARE EXPOSED AS A RESULT OF CONSTRUCTION WILL BE REMOVED AND DISPOSED OF BY THE CONTRACTOR. THIS WORK SHALL BE CONSIDERED INCIDENTAL TO CONSTRUCTION.

35 SHORING COSTS WILL BE CONSIDERED INCIDENTAL TO THE TRENCH AND BACKFILL COSTS.

36 THE CONTRACTOR WILL BE RESPONSIBLE FOR SECURING NPDES PERMITS REQUIRED BY APPLICABLE CITY, STATE, AND FEDERAL REGULATIONS.

37 THE TERM "REMOVE" USED IN THIS PLAN SET INCLUDES THE DISPOSAL OF SAID MATERIAL IN ACCORDANCE WITH CITY OF ALBUQUERQUE SPECIFICATIONS, LATEST EDITION, THROUGH UPDATE 9.

38 THE CONTRACTOR SHALL BE RESPONSIBLE FOR PROVIDING AND MAINTAINING ALL CONSTRUCTION SIGNING UNTIL PROJECT HAS BEEN ACCEPTED BY THE CITY OF ALBUQUERQUE.

39 ALL REINFORCING STEEL TO BE GRADE 60 UNLESS OTHERWISE NOTED ON PLANS.

40 STATIONS OF STORM DRAIN INLETS ARE TO THE CENTER OF GRATE AT FLOWLINE.

41 ALL STORM DRAIN AND CONNECTOR PIPE WILL BE CLASS IV REINFORCED CONCRETE PIPE UNLESS OTHERWISE NOTED ON THE PLANS.

42 EXCESS EXCAVATION REQUIRED TO CONSTRUCT THE PROJECT THAT DOES NOT HAVE A CORRESPONDING BID ITEM (ie: EXCAVATION OF SUBGRADE OR DIRT) SHALL BE REMOVED AND DISPOSED OF AT NO ADDITIONAL COST TO THE OWNER AND WILL BE CONSIDERED INCIDENTAL TO CONSTRUCTION.

43 EXCAVATION, TRENCHING AND SHORING ACTIVITIES MUST BE CARRIED-OUT IN ACCORDANCE WITH OSHA 29 CFR 1926.650, SUBPART P.

44 CONTRACTOR IS ADVISED TO VISIT THE PROJECT SITE PRIOR TO BIDDING AND FAMILIARIZE THEMSELVES WITH FIELD CONDITIONS INCLUDING THE LOCATION OF UTILITIES SHOWN ON THE PLANS AND OTHER UTILITIES/ OBSTACLES CLEARLY VISIBLE IN THE FIELD.

45 ALL DISTURBED GROUND AREAS SHALL BE REVEGETATED IN ACCORDANCE WITH CITY OF ALBUQUERQUE STANDARD SPECIFICATIONS FOR PUBLIC WORKS CONSTRUCTION, SECTION 1012 NATIVE GRASS SEEDING, AS REVISED THROUGH UPDATE 9.

46 REMOVAL AND DISPOSAL OF EXISTING ASBESTOS PIPE MATERIAL SHALL COMPLY WITH ALL APPLICABLE LOCAL, STATE AND FEDERAL GOVERNMENTAL LAWS AND REGULATIONS. THE CONTRACTOR WILL BE RESPONSIBLE FOR DISPOSING OF ALL ASBESTOS PIPE MATERIAL AT DISPOSAL SITES APPROVED BY GOVERNMENTAL AGENCIES REGULATING THE DISPOSAL OF SUCH MATERIAL.

47 ALL NEW STORM INLETS SHALL BE TYPE "A" PER CITY OF ALBUQUERQUE STANDARD DRAWINGS 2201 AND 2202 UNLESS OTHERWISE NOTED ON THE PLANS. ALL STORM INLET GRATES SHALL CONFORM TO CITY OF ALBUQUERQUE STANDARD DRAWING 2220.

48 IF A PAVEMENT DROP-OFF IS CREATED DURING CONSTRUCTION, THE CONTRACTOR SHALL INITIATE PROTECTIVE MEASURES TO PREVENT ABRUPT DROP-OFFS. THIS WORK SHALL BE CONSIDERED INCIDENTAL TO CONSTRUCTION.

49 THE CONTRACTOR SHALL COORDINATE WITH THE WATER AUTHORITY SEVEN (7) DAYS IN ADVANCE OF PERFORMING WORK THAT WILL AFFECT THE PUBLIC WATER OR SANITARY SEWER INFRASTRUCTURE. WORK REQUIRING SHUTOFF OF FACILITIES DESIGNATED AS MASTER PLAN FACILITIES MUST BE COORDINATED WITH THE WATER AUTHORITY 14 DAYS IN ADVANCE OF PERFORMING SUCH WORK. ONLY WATER AUTHORITY CREWS ARE AUTHORIZED TO OPERATE PUBLIC VALVES. SHUTOFF REQUESTS MUST BE MADE ONLINE AT http:/abcwua.org/content/view/463/729/.

50 ELECTRONIC MARKER DEVICES (EMD) WILL BE PLACED ACCORDING TO SECTION 170 OF THE CITY OF ALBUQUERQUE STANDARD SPECIFICATIONS FOR PUBLIC WORKS CONSTRUCTION, 1986 EDITION AS REVISED THROUGH UPDATE 9. PROVIDING AND INSTALLATION OF EMD'S SHALL BE CONSIDERED INCIDENTAL TO CONSTRUCTION. NO SEPARATE OR ADDITIONAL PAYMENT WILL BE MADE FOR EMDS.

51 NO STEPS SHALL BE INSTALLED ON ANY NEW SAS MANHOLES.

52 CONTRACTOR SHALL BE RESPONSIBLE FOR LOCATING ALL STORM DRAIN CONFLICTS DURING CONSTRUCTION.

53 IN THE CASE OF A CONFLICT BETWEEN CONDUIT OR EQUIPMENT PLACEMENT AND STORM DRAIN, CONTRACTOR SHALL INFORM THE CONSTRUCTION ENGINEER BEFORE PROCEEDING WITH ANY DEVIATIONS FROM PLANS.

54 SHOULD ANY IMPACT OCCUR TO STORM DRAIN PIPE DURING CONSTRUCTION EFFORTS, THE CONTRACTOR SHALL BE RESPONSIBLE FOR CONTACTING THE CITY OF ALBUQUERQUE STORM DRAIN MAINTENANCE TO INSPECT THE IMPACTED PIPE.

55 REPAIRS TO IMPACTED PIPE REQUIRED BY THE CITY OF ALBUQUERQUE STORM DRAIN MANAGEMENT PERSONNEL SHALL BE THE FINANCIAL AND CONSTRUCTION RESPONSIBILITY OF THE CONTRACTOR.

56 RCP SHALL BE INSTALLED SO THAT THE JOINT GAP AT THE HOME POSITION SHALL CONFORM TO THE APPROVED MANUFACTURER'S RECOMMENDATIONS. MANUFACTURER'S RECOMMEND JOINING GAP TOLERANCES FOR EACH PIPE SIZE AND TYPE SHALL BE SUBMITTED TO THE ENGINEER FOR APPROVAL PRIOR TO PLACEMENT OF PIPE. RCP JOINT SHALL NOT BE GROUTED UNLESS DIRECTED BY THE ENGINEER AFTER APPROVAL.

57 AN SO-19 PERMIT IS REQUIRED TO PLACE ANY MATERIAL ON OR AROUND A STORM DRAIN INLET IN THE CITY RIGHT-OF-WAY THAT WOULD INTERFERE WITH THE INLET RECEIVING STORM WATER PER THE ENGINEER'S DESIGN. CITY PERSONNEL MAY REMOVE THIS MATERIAL AT ANY TIME WITHOUT NOTICE. THE PREFERRED BMP IS TO REMOVE SEDIMENT/POLLUTANTS ON THE PROPERTY WHERE CONSTRUCTION ACTIVITY IS OCCURRING.

58 THE CONTRACTOR MUST MAINTAIN CONTINUOUS ACCESS TO ALL BUSINESSES AND PRIVATE PROPERTY DURING THE COURSE OF CONSTRUCTION. THIS APPLIES TO BOTH VEHICLES AND PEDESTRIANS, INCLUDING ADA ACCESS (WHERE APPLICABLE). THIS WORK SHALL BE CONSIDERED INCIDENTAL TO CONSTRUCTION.

59 ANY SHORING THE CONTRACTOR DECIDES TO USE AS PART OF CONSTRUCTION SHALL BE CONSIDERED INCIDENTAL TO CONSTRUCTION AND NO ADDITIONAL OR SEPERATE PAYMENT FOR ANY SHORING WORK WILL BE MADE.

SPECIAL NOTE:

PROVIDE FLEXIBLE POST UTILITY MARKERS AT 300' INTERVALS AND ALL CHANGES IN PIPELINE DIRECTION. FLEXIBLE POST TO BE 6' LONG X 4" WIDE NOMINAL SIZE, FIBERGLASS CONSTRUCTION. USE POSTS MANUFACTURED BY WILLIAM FRICK & CO., FLEXPOST, OR ACCEPTED EQUAL PRODUCT. USE VINYL LABELS READING: "WARNING: BURIED PRIVATE, NON-POTABLE WATER", AND LABEL READING: "NM 811, DIAL 811 OR 260-1990."

COA PROJECT NO: 586082

Design Review Committee — APPROVED MAY 1 9 2017 DESIGN REVIEW COMMITTEE

City Engineer Approval — APPROVED JUN 0 8 2017 CITY ENGINEER

Last Design Update

Mo. / Day / Yr.	Mo. / Day / Yr.

GEORGE NEMETH NEW MEXICO 12284 REGISTERED PROFESSIONAL ENGINEER 5-3-17

NO.	REVISION DESCRIPTION	DATE	BY
1			
2			
3			
4			
5			

Name
Location

KIRTLAND AIR FORCE BASE
BULK FUELS FACILITY
KAFB - 106239 CONVEYANCE LINE

GENERAL NOTES

SMITH ENGINEERING COMPANY
2201 SAN PEDRO NE BLDG 4, SUITE 200
ALBUQUERQUE, NM 87110

JOB NO: 116112
DATE: MAY 3, 2017
SHEET NO: G-102 / 2 OF 27

VICINITY MAP M-18
SCALE: 1"=750'

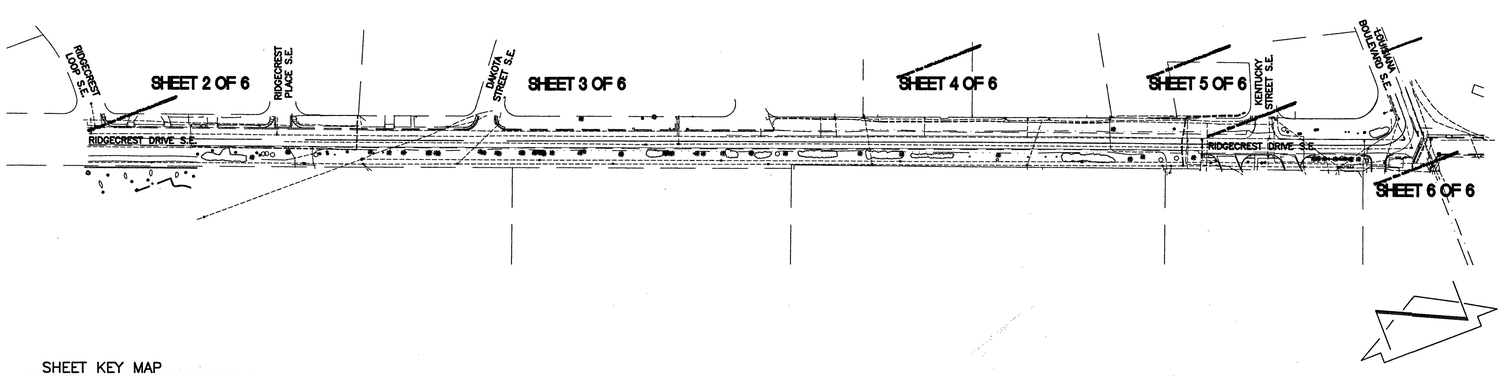

SHEET KEY MAP
NOT TO SCALE

FOR INFORMATION ONLY

DESCRIPTION

THE PUBLIC RIGHT-OF-WAY OF RIDGECREST DRIVE S.E. BETWEEN RIDGECREST LOOP S.E. AND LOUISIANA BOULEVARD S.E., ALBUQUERQUE, NEW MEXICO.

GENERAL NOTES

1. A TOPOGRAPHIC AND UTILITY SURVEY WAS PERFORMED IN OCTOBER, 2016. THIS IS NOT A BOUNDARY SURVEY, PROPERTY INFORMATION IS SHOWN FOR ORIENTATION ONLY. THE SCREENED BOUNDARY DATA SHOWN IS BASED UPON A PRELIMINARY PROPERTY INVESTIGATION PREPARED BY THIS FIRM DATED AUGUST, 2016.
2. ALL DISTANCES ARE GROUND DISTANCES.
3. SITE LOCATED WITHIN SECTION 36, TOWNSHIP 10 NORTH, RANGE 3 EAST, N.M.P.M.
4. UTILITY INFORMATION SHOWN HEREON IS BASED UPON ONSITE SURFACE EVIDENCE, REVIEW OF AVAILABLE CITY OF ALBUQUERQUE DISTRIBUTION MAPS, REVIEW OF PNM, NEW MEXICO GAS COMPANY AND CENTURYLINK AVAILABLE DOCUMENTS AND UTILITY LINE-SPOTS PROVIDED BY HIGH MESA CONSULTING GROUP (2016.030.2-SITE UTILITY DIAGRAM DATED 10-11-2016). IN ADDITION, UTILITY LINE-SPOTS WERE REQUESTED VIA THE NEW MEXICO ONE CALL SERVICE (TICKET # 16SE280041). UTILITY LINES SHOWN ON THIS DRAWING ARE SHOWN IN AN APPROXIMATE MANNER ONLY AND SUCH LINES MAY EXIST WHERE NONE ARE SHOWN. IF ANY SUCH EXISTING LINES ARE SHOWN, THE LOCATION IS BASED UPON INFORMATION PROVIDED BY THE OWNER OF SAID UTILITY, AND THE INFORMATION MAY BE INCOMPLETE, OR MAY BE OBSOLETE BY THE TIME CONSTRUCTION COMMENCES. THE SURVEYOR HAS CONDUCTED ONLY PRELIMINARY INVESTIGATION OF THE LOCATION, DEPTH, SIZE, OR TYPE OF EXISTING UTILITY LINES, PIPELINES, OR UNDERGROUND UTILITY LINES. THIS INVESTIGATION IS NOT CONCLUSIVE, AND MAY NOT BE COMPLETE, THEREFORE, MAKES NO REPRESENTATION PERTAINING THERETO, AND ASSUMES NO RESPONSIBILITY OR LIABILITY THEREFOR. THE PROPERTY OWNER, DEVELOPER, OR CONTRACTOR SHALL INFORM ITSELF OF THE LOCATION OF ANY UTILITY LINE, PIPELINE, OR UNDERGROUND UTILITY LINE IN OR NEAR THE AREA OF THE WORK IN ADVANCE OF AND DURING EXCAVATION WORK. THE PROPERTY OWNER, DEVELOPER, OR CONTRACTOR IS FULLY RESPONSIBLE FOR ANY AND ALL DAMAGE CAUSED BY ITS FAILURE TO LOCATE, IDENTIFY AND PRESERVE ANY AND ALL EXISTING UTILITIES, PIPELINES, AND UNDERGROUND UTILITY LINES. IN PLANNING AND CONDUCTING EXCAVATION, THE CONTRACTOR SHALL COMPLY WITH STATE STATUTES, MUNICIPAL AND LOCAL ORDINANCES, RULES AND REGULATIONS, IF ANY, PERTAINING TO THE LOCATION OF THESE LINES AND FACILITIES.

CONTROL SURVEY NOTE

A CONTROL SURVEY WAS CONDUCTED AT THE SITE ON JULY 13, 2016 AND VERIFIED ON OCTOBER 03, 2016. CONTROL WAS PROJECTED ONTO THE SUBJECT SITE UTILIZING RTK GPS OBSERVATIONS COMBINED WITH NGS COAJUL08 MODEL TO ESTABLISH HORIZONTAL AND VERTICAL POSITIONS BASED UPON NAD83/NAVD 88 DATUM. THE RTK OBSERVATIONS WERE USED TO ESTABLISH THE ELEVATIONS FOR THE CONTROL POINTS AND BENCHMARKS AT THE PROJECT SITE.

THE POINTS OBSERVED HAVE BEEN QUALITY CONTROLLED FOR RELATIVE ACCURACY. ALL HORIZONTAL COORDINATES ARE MODIFIED NAD 83 GRID VALUES AND HAVE BEEN ADJUSTED TO THE GROUND AT THE PROJECTION POINT (THE SCALE FACTOR USED IS 1/CF=1.00034087). THE PROJECTION POINT USED FOR THIS PROJECT IS A.G.R.S. "1-M18" WITH NAD 83 GRID COORDINATES OF:
NORTHING= 1,475,270.293
EASTING= 1,543,374.499
ELLIPSOID HEIGHT= 5271.00 FEET.
THE ELEVATIONS ARE BASED UPON THE NAVD 88 DATUM AND REQUIRE NO FURTHER ADJUSTMENT.

BENCHMARKS

PROJECT BENCHMARK

A NMSHC BRASS DISK STAMPED "STA. G-2" SET IN TOP OF CONCRETE POST FLUSH WITH THE GROUND, IN THE WESTERN MEDIAN, NEAR THE INTERSECTION OF GIBSON BOULEVARD S.E. AND LOUISIANA BOULEVARD S.E.
ELEVATION = 5337.43 FEET (NAVD 1988)

TEMPORARY BENCHMARK #1 (T.B.M.)

A MAG NAIL W/WASHER SET IN ASPHALT ON THE SOUTH SIDE OF RIDGECREST DRIVE S.E., AS SHOWN ON SHEET 2.
ELEVATION = 5332.77 FEET (NAVD 1988)

TEMPORARY BENCHMARK #2 (T.B.M.)

A MAG NAIL W/WASHER SET IN CONCRETE NEAR THE SOUTHWEST QUADRANT OF THE INTERSECTION OF RIDGECREST DRIVE S.E. AND DAKOTA STREET S.E., AS SHOWN ON SHEET 3.
ELEVATION = 5340.94 FEET (NAVD 1988)

TEMPORARY BENCHMARK #3 (T.B.M.)

A MAG NAIL W/WASHER SET IN TOP OF CONCRETE CURB ON THE NORTH SIDE OF RIDGECREST DRIVE S.E., AS SHOWN ON SHEET 4.
ELEVATION = 5353.72 FEET (NAVD 1988)

TEMPORARY BENCHMARK #4 (T.B.M.)

A MAG NAIL W/WASHER SET IN ASPHALT NEAR THE SOUTHEAST QUADRANT OF THE INTERSECTION OF RIDGECREST DRIVE S.E. AND LOUISIANA BOULEVARD S.E., AS SHOWN ON SHEET 6.
ELEVATION = 5364.68 FEET (NAVD 1988)

SURVEYORS CERTIFICATION

I, JOSEPH M. SOLOMON, JR., NEW MEXICO PROFESSIONAL SURVEYOR NO. 15075, DO HEREBY CERTIFY; THAT THIS TOPOGRAPHIC AND UTILITY SURVEY AND THE ACTUAL SURVEY ON THE GROUND UPON WHICH IT IS BASED WERE PERFORMED BY ME OR UNDER MY DIRECT SUPERVISION; THAT THE SURVEY SHOWS ALL EASEMENTS MADE KNOWN TO ME BY THIS OWNER, UTILITY COMPANIES, OR OTHER PARTIES EXPRESSING AN INTEREST; THAT THIS SURVEY MEETS THE MINIMUM STANDARDS FOR SURVEYING IN NEW MEXICO, AND THAT IT IS TRUE AND CORRECT TO THE BEST OF MY KNOWLEDGE AND BELIEF.

JOSEPH M. SOLOMON, JR., NMPS 15075 DATE

File Path:P:\JOB\2016\2016030.2\SUR\ | Plot Date: 10-24-2016
File Name:160302_TOPO1.DWG | Plot Time: 1:02 pm

COVER SHEET
EA ENGINEERING - KAFB BFF - RIDGECREST DRIVE GEP CORRIDOR

SURVEYED BY R.C.W./J.M.T.
DRAWN BY T.N.T.
APPROVED BY J.M.S.

NO.	DATE	BY	REVISIONS

JOB NO. 2016.030.2
DATE 10-2016
SHEET 1 OF 6
V-101 / 3 OF 27

TEMPORARY BENCHMARK #1 (T.B.M.)

A MAG NAIL W/WASHER SET IN ASPHALT ON THE SOUTH SIDE OF RIDGECREST DRIVE S.E., AS SHOWN ON THIS SHEET.
ELEVATION = 5332.77 FEET (NAVD 1988)

NOT TO SCALE

20 0 40
10 20

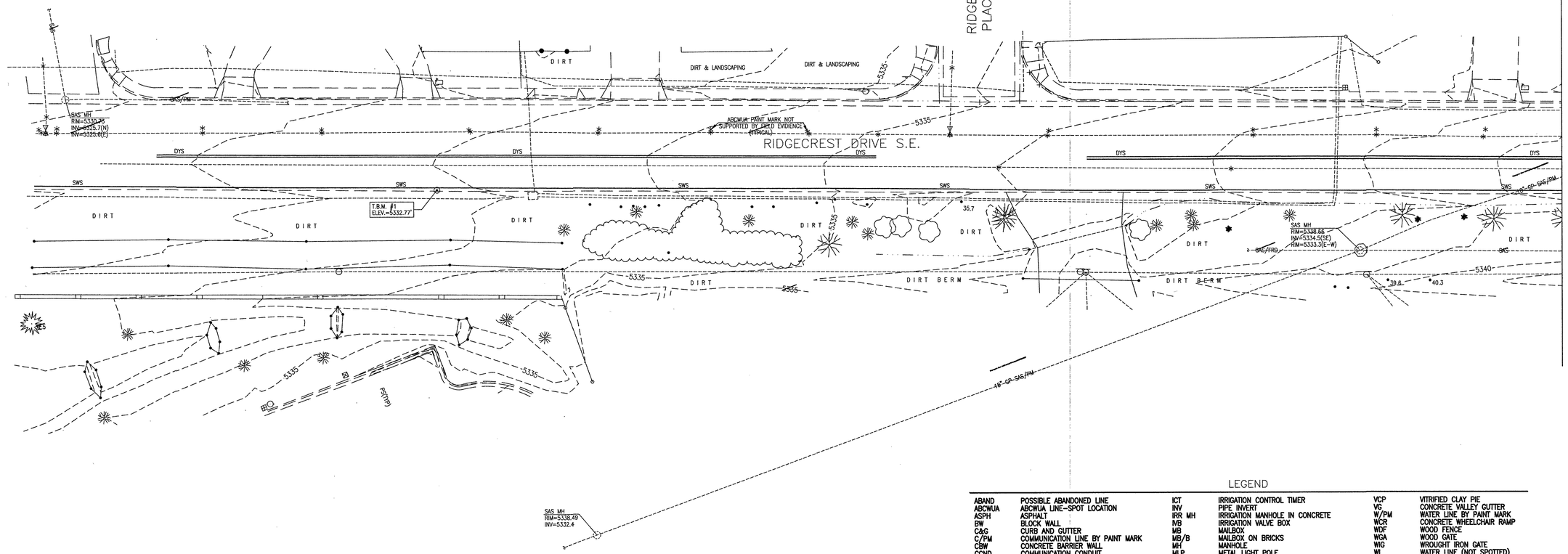

LEGEND

ABAND	POSSIBLE ABANDONED LINE	ICT	IRRIGATION CONTROL TIMER	VCP	VITRIFIED CLAY PIE
ABCWUA	ABCWUA LINE-SPOT LOCATION	INV	PIPE INVERT	VG	CONCRETE VALLEY GUTTER
ASPH	ASPHALT	IRR MH	IRRIGATION MANHOLE IN CONCRETE	W/PM	WATER LINE BY PAINT MARK
BW	BLOCK WALL	IVB	IRRIGATION VALVE BOX	WCR	CONCRETE WHEELCHAIR RAMP
C&G	CURB AND GUTTER	MB	MAILBOX	WDF	WOOD FENCE
C/PM	COMMUNICATION LINE BY PAINT MARK	MB/B	MAILBOX ON BRICKS	WGA	WOOD GATE
CBW	CONCRETE BARRIER WALL	MH	MANHOLE	WIG	WROUGHT IRON GATE
CCND	COMMUNICATION CONDUIT	MLP	METAL LIGHT POLE	WL	WATER LINE (NOT SPOTTED)
CDP	CONCRETE DRIVE PAD	MSN	METAL SIGN (GENERAL)	WLP	WOOD LIGHT POLE
CF	LANDSCAPING CRUSHER FINES	MTC	METAL TRASH CAN	WMB	WATER METER BOX
CHC	CONCRETE HEADER CURB	OHC(2)	OVERHEAD COMMUNICATION (# OF LINES)	WP	WOOD POST
CI	CAST IRON PIPE	OHE(2)	OVERHEAD ELECTRIC (# OF LINES)	WPP	WOOD POWER POLE
CLF	CHAIN LINK FENCE	PBAR	PIPE BARRIER	WSF	4-STRAND SMOOTH WIRE FENCE
CLF/BW	CHAIN LINK FENCE WITH BARBED WIRE	PIV	POST INDICATOR VALVE	WV	WATER VAULT
CMR	COMMUNICATION RISER	PS	PAINTED PARKING STRIPE	WVB	WATER VALVE BOX
CMU	CONCRETE MASONRY UNIT WALL	PVC	POLYVINYL CHLORIDE PIPE		
CND	ELECTRIC CONDUIT	R/PM	REUSE WATER LINE BY PAINT MARK	*	PAINTED UTILITY MARK
CONC	CONCRETE	RCP	REINFORCED CONCRETE PIPE	*	PAINTED ABCWUA UTILITY MARK
CP	CONCRETE PIPE	RR	LANDSCAPING RIVER ROCK (DRAINAGE)	ø	TREE TRUNK DIAMETER
CPB	COMMUNICATION PULLBOX	RRT	LANDSCAPING RAILROAD TIES		
CSW	CONCRETE SIDEWALK	RWV	REUSE WATER VAULT		CONIFEROUS TREE
D/W	CONCRETE DRIVEWAY	SAS	SANITARY SEWER		
DBL	DOUBLE	SAS/PM	SANITARY SEWER PIPE BY PAINT MARK		
DPG	DOUBLE PIPE GATE	SD	STORM DRAIN		DECIDUOUS TREE
DWS	PAINTED DASHED WHITE TRAFFIC STRIPE	SD/PM	STORM DRAIN PIPE BY PAINT MARK		
DYS	PAINTED DOUBLE YELLOW TRAFFIC STRIPE	SDI	STORM DRAIN INLET		
E/PM	ELECTRIC LINE BY PAINT MARK	SDP	SERVICE DROP POLE		SMALL DECIDUOUS TREE
EA	EDGE OF ASPHALT	SGP	STEEL GUARD POST		
EPB	ELECTRIC PULLBOX	SP	STEEL POST		
FH	FIRE HYDRANT	SSG	SLIDING STEEL GATE		GROUP OF SMALL TREES
FL	FLOWLINE	STW	STUCCO WALL		
FO/PM	FIBER OPTIC LINE BY PAINT MARK	STW/WI	STUCCO WALL WITH WROUGHT IRON FENCE		SHRUB
FRD	UTILITY FROM COA DISTRIBUTION MAPS	SWS	PAINTED SOLID WHITE TRAFFIC STRIPE		
G/PM	GAS LINE BY PAINT MARK	TA	TOP OF ASPHALT		TREE STUMP
GA	GATE	TC	TOP OF CURB		
GRV	LANDSCAPING GRAVEL	TCO	TOP OF CONCRETE		
GVB	GAS VALVE BOX	TG	TOP OF GRATE		
GW	GUY WIRE ANCHOR	TRN	ELECTRIC TRANSFORMER		
HDPE	HIGH DENSITY POLYETHYLENE PIPE	TS	TRAFFIC SIGN		
		TV/PM	CABLE TELEVISION LINE BY PAINT MARK		
		TVCAB	CABLE TELEVISION CABINET		
		TVR	CABLE TELEVISION RISER		
		TYP	TYPICAL		

FOR INFORMATION ONLY

File Path: P:\AMA\2016\2016.030.2\SIR\ | Plot Date: 10-24-2016
File Name: 160302_TOPO1.DWG | Plot Time: 1:02 pm

TOPOGRAPHIC AND UTILITY SURVEY

EA ENGINEERING – KAFB BFF – RIDGECREST DRIVE GEP CORRIDOR

SURVEYED BY R.C.W./J.M.T.
DRAWN BY T.N.T.
APPROVED BY J.M.S.

NO.	DATE	BY	REVISIONS

JOB NO. 2016.030.2
DATE 10-2016
SHEET 2 OF 6
V-102 / 4 OF 27

NOT TO SCALE

20 0 40

10 20

TEMPORARY BENCHMARK #2 (T.B.M.)

A MAG NAIL W/WASHER SET IN CONCRETE NEAR THE SOUTHWEST QUADRANT OF THE INTERSECTION OF RIDGECREST DRIVE S.E. AND DAKOTA STREET S.E., AS SHOWN ON THIS SHEET.
ELEVATION = 5340.94 FEET (NAVD 1988)

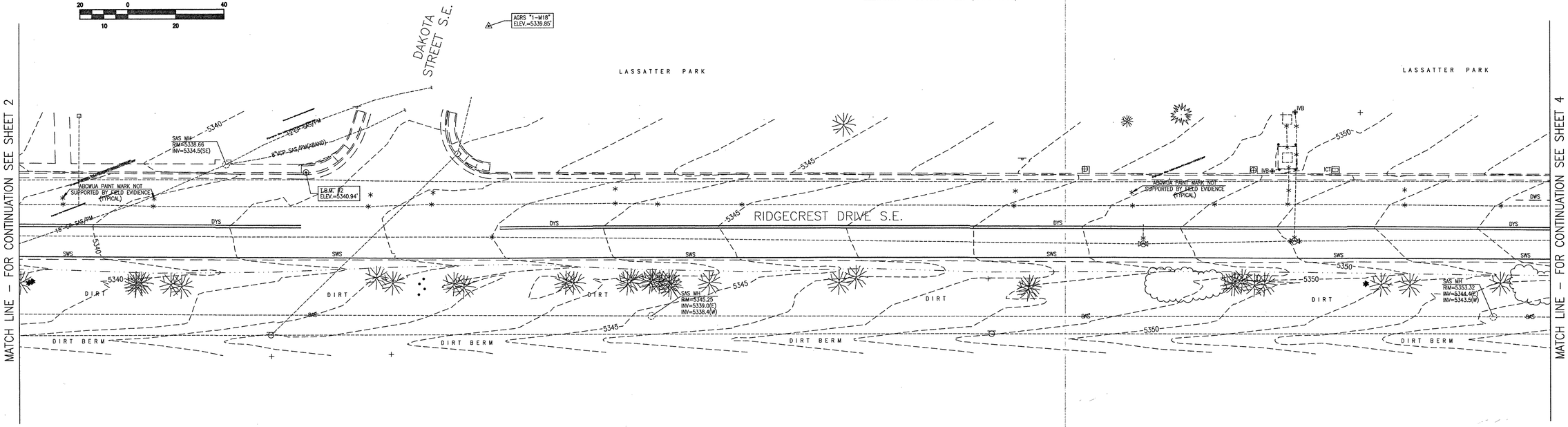

LEGEND

ABAND	POSSIBLE ABANDONED LINE	ICT	IRRIGATION CONTROL TIMER	VCP	VITRIFIED CLAY PIE
ABCWUA	ABCWUA LINE–SPOT LOCATION	INV	PIPE INVERT	VG	CONCRETE VALLEY GUTTER
ASPH	ASPHALT	IRR MH	IRRIGATION MANHOLE IN CONCRETE	W/PM	WATER LINE BY PAINT MARK
BW	BLOCK WALL	IVB	IRRIGATION VALVE BOX	WCR	CONCRETE WHEELCHAIR RAMP
C&G	CURB AND GUTTER	MB	MAILBOX	WDF	WOOD FENCE
C/PM	COMMUNICATION LINE BY PAINT MARK	MB/B	MAILBOX ON BRICKS	WGA	WOOD GATE
CBW	CONCRETE BARRIER WALL	MH	MANHOLE	WIG	WROUGHT IRON GATE
CCND	COMMUNICATION CONDUIT	MLP	METAL LIGHT POLE	WL	WATER LINE (NOT SPOTTED)
CDP	CONCRETE DRIVE PAD	MSN	METAL SIGN (GENERAL)	WLP	WOOD LIGHT POLE
CF	LANDSCAPING CRUSHER FINES	MTC	METAL TRASH CAN	WMB	WATER METER BOX
CHC	CONCRETE HEADER CURB	OHC(2)	OVERHEAD COMMUNICATION (# OF LINES)	WP	WOOD POST
CI	CAST IRON PIPE	OHE(2)	OVERHEAD ELECTRIC (# OF LINES)	WPP	WOOD POWER POLE
CLF	CHAIN LINK FENCE	PBAR	PIPE BARRIER	WRF	4–STRAND SMOOTH WIRE FENCE
CLF/BW	CHAIN LINK FENCE WITH BARBED WIRE	PIV	POST INDICATOR VALVE	WV	WATER VAULT
CMR	COMMUNICATION RISER	PS	PAINTED PARKING STRIPE	WVB	WATER VALVE BOX
CMU	CONCRETE MASONRY UNIT WALL	PVC	POLYVINYL CHLORIDE PIPE		
CND	ELECTRIC CONDUIT	R/PM	REUSE WATER LINE BY PAINT MARK	*	PAINTED UTILITY MARK
CONC	CONCRETE	RCP	REINFORCED CONCRETE PIPE	*	PAINTED ABCWUA UTILITY MARK
CP	CONCRETE PIPE	RR	LANDSCAPING RIVER ROCK (DRAINAGE)	ø	TREE TRUNK DIAMETER
CPB	COMMUNICATION PULLBOX	RRT	LANDSCAPING RAILROAD TIES		
CSW	CONCRETE SIDEWALK	RWV	REUSE WATER VAULT		CONIFEROUS TREE
D/W	CONCRETE DRIVEWAY	SAS	SANITARY SEWER		
DBL	DOUBLE	SAS/PM	SANITARY SEWER PIPE BY PAINT MARK		DECIDUOUS TREE
DPG	DOUBLE PIPE GATE	SD	STORM DRAIN		
DWS	PAINTED DASHED WHITE TRAFFIC STRIPE	SD/PM	STORM DRAIN PIPE BY PAINT MARK		SMALL DECIDUOUS TREE
DYS	PAINTED DOUBLE YELLOW TRAFFIC STRIPE	SDI	STORM DRAIN INLET		
E/PM	ELECTRIC LINE BY PAINT MARK	SDP	SERVICE DROP POLE		GROUP OF SMALL TREES
EA	EDGE OF ASPHALT	SGP	STEEL GUARD POST		
EPB	ELECTRIC PULLBOX	SP	STEEL POST		SHRUB
FH	FIRE HYDRANT	SSG	SLIDING STEEL GATE		
FL	FLOWLINE	STW	STUCCO WALL		TREE STUMP
FO/PM	FIBER OPTIC LINE BY PAINT MARK	STW/WI	STUCCO WALL WITH WROUGHT IRON FENCE		
FRD	UTILITY FROM COA DISTRIBUTION MAPS	SWS	PAINTED SOLID WHITE TRAFFIC STRIPE		
G/PM	GAS LINE BY PAINT MARK	TA	TOP OF ASPHALT		
GA	GATE	TC	TOP OF CURB		
GRV	LANDSCAPING GRAVEL	TCO	TOP OF CONCRETE		
GVB	GAS VALVE BOX	TG	TOP OF GRATE		
GW	GUY WIRE ANCHOR	TRN	ELECTRIC TRANSFORMER		
HDPE	HIGH DENSITY POLYETHYLENE PIPE	TS	TRAFFIC SIGN		
		TV/PM	CABLE TELEVISION LINE BY PAINT MARK		
		TVCAB	CABLE TELEVISION CABINET		
		TVR	CABLE TELEVISION RISER		
		TYP	TYPICAL		

FOR INFORMATION ONLY

File Path: P:\AUA\2016\2016.030.2\SIR\
File Name: 160302_TOPO3.DWG
Plot Date: 10-24-2016
Plot Time: 1:05 pm

TOPOGRAPHIC AND UTILITY SURVEY

EA ENGINEERING – KAFB BFF – RIDGECREST DRIVE GEP CORRIDOR

SURVEYED BY R.C.W./J.M.T.
DRAWN BY T.N.T.
APPROVED BY J.M.S.

NO.	DATE	BY	REVISIONS

JOB NO. 2016.030.2
DATE 10–2016
SHEET 3 OF 6
V-103 / 5 OF 27

TEMPORARY BENCHMARK #3 (T.B.M.)

A MAG NAIL W/WASHER SET IN TOP OF CONCRETE CURB ON THE NORTH SIDE OF RIDGECREST DRIVE S.E., AS SHOWN ON THIS SHEET.
ELEVATION = 5353.72 FEET (NAVD 1988)

NOT TO SCALE

20 0 40
10 20

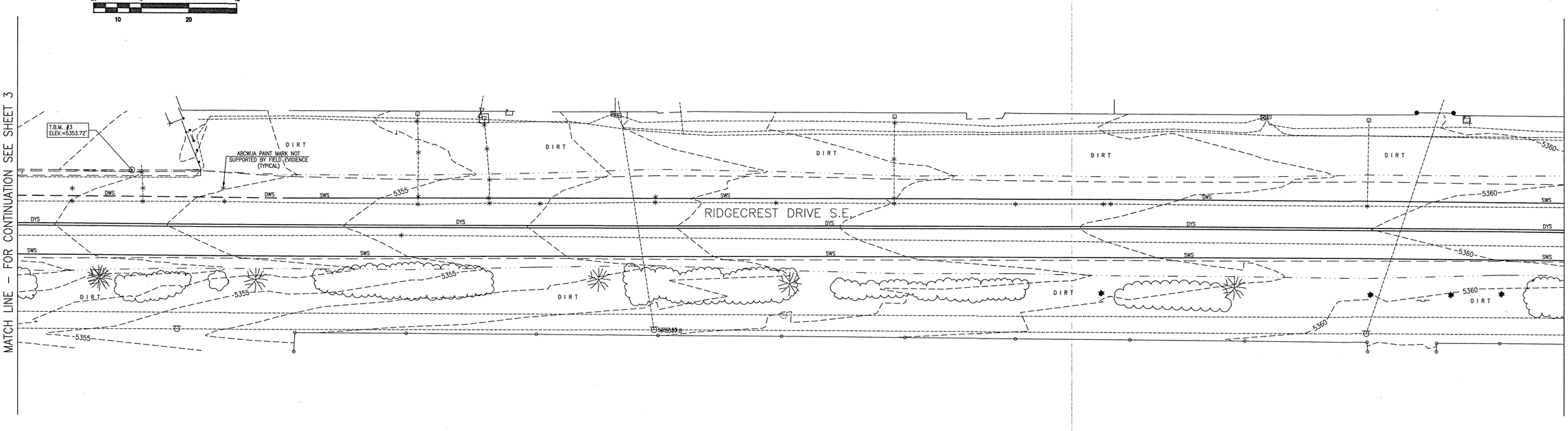

FOR INFORMATION ONLY

LEGEND

ABAND	POSSIBLE ABANDONED LINE	ICT	IRRIGATION CONTROL TIMER	VCP	VITRIFIED CLAY PIE
ABCWUA	ABCWUA LINE-SPOT LOCATION	INV	PIPE INVERT	VG	CONCRETE VALLEY GUTTER
ASPH	ASPHALT	IRR MH	IRRIGATION MANHOLE IN CONCRETE	W/PM	WATER LINE BY PAINT MARK
BW	BLOCK WALL	IVB	IRRIGATION VALVE BOX	WCR	CONCRETE WHEELCHAIR RAMP
C&G	CURB AND GUTTER	MB	MAILBOX	WDF	WOOD FENCE
C/PM	COMMUNICATION LINE BY PAINT MARK	MB/B	MAILBOX ON BRICKS	WGA	WOOD GATE
CBW	CONCRETE BARRIER WALL	MH	MANHOLE	WIG	WROUGHT IRON GATE
CCND	COMMUNICATION CONDUIT	MLP	METAL LIGHT POLE	WL	WATER LINE (NOT SPOTTED)
CDP	CONCRETE DRIVE PAD	MSN	METAL SIGN (GENERAL)	WLP	WOOD LIGHT POLE
CF	LANDSCAPING CRUSHER FINES	MTC	METAL TRASH CAN	WMB	WATER METER BOX
CHC	CONCRETE HEADER CURB	OHC(2)	OVERHEAD COMMUNICATION (# OF LINES)	WP	WOOD POST
CI	CAST IRON PIPE	OHE(2)	OVERHEAD ELECTRIC (# OF LINES)	WPP	WOOD POWER POLE
CLF	CHAIN LINK FENCE	PBAR	PIPE BARRIER	WRF	4-STRAND SMOOTH WIRE FENCE
CLF/BW	CHAIN LINK FENCE WITH BARBED WIRE	PIV	POST INDICATOR VALVE	WV	WATER VAULT
CMR	COMMUNICATION RISER	PS	PAINTED PARKING STRIPE	WVB	WATER VALVE BOX
CMU	CONCRETE MASONRY UNIT WALL	PVC	POLYVINYL CHLORIDE PIPE		
CND	ELECTRIC CONDUIT	R/PM	REUSE WATER LINE BY PAINT MARK	*	PAINTED UTILITY MARK
CONC	CONCRETE	RCP	REINFORCED CONCRETE PIPE	*	PAINTED ABCWUA UTILITY MARK
CP	CONCRETE PIPE	RR	LANDSCAPING RIVER ROCK (DRAINAGE)	ø	TREE TRUNK DIAMETER
CPB	COMMUNICATION PULLBOX	RRT	LANDSCAPING RAILROAD TIES		
CSW	CONCRETE SIDEWALK	RWV	REUSE WATER VAULT		
D/W	CONCRETE DRIVEWAY	SAS	SANITARY SEWER		
DBL	DOUBLE	SAS/PM	SANITARY SEWER PIPE BY PAINT MARK		CONIFEROUS TREE
DPG	DOUBLE PIPE GATE	SD	STORM DRAIN		
DWS	PAINTED DASHED WHITE TRAFFIC STRIPE	SD/PM	STORM DRAIN PIPE BY PAINT MARK		
DYS	PAINTED DOUBLE YELLOW TRAFFIC STRIPE	SDI	STORM DRAIN INLET		
E/PM	ELECTRIC LINE BY PAINT MARK	SDP	SERVICE DROP POLE		DECIDUOUS TREE
EA	EDGE OF ASPHALT	SGP	STEEL GUARD POST		
EPB	ELECTRIC PULLBOX	SP	STEEL POST		
FH	FIRE HYDRANT	SSG	SLIDING STEEL GATE		SMALL DECIDUOUS TREE
FL	FLOWLINE	STW	STUCCO WALL		
FO/PM	FIBER OPTIC LINE BY PAINT MARK	STW/WI	STUCCO WALL WITH WROUGHT IRON FENCE		GROUP OF SMALL TREES
FRD	UTILITY FROM COA DISTRIBUTION MAPS	SWS	PAINTED SOLID WHITE TRAFFIC STRIPE		
G/PM	GAS LINE BY PAINT MARK	TA	TOP OF ASPHALT		
GA	GATE	TC	TOP OF CURB		
GRV	LANDSCAPING GRAVEL	TCO	TOP OF CONCRETE		SHRUB
GVB	GAS VALVE BOX	TG	TOP OF GRATE		
GW	GUY WIRE ANCHOR	TRN	ELECTRIC TRANSFORMER		TREE STUMP
HDPE	HIGH DENSITY POLYETHYLENE PIPE	TS	TRAFFIC SIGN		
		TV/PM	CABLE TELEVISION LINE BY PAINT MARK		
		TVCAB	CABLE TELEVISION CABINET		
		TVR	CABLE TELEVISION RISER		
		TYP	TYPICAL		

File Path:P:\JMA\2016\2016030\2\SHT\ | Plot Date: 10-24-2016
File Name:160302_TOPO4.DWG | Plot Time: 1:06 pm

TOPOGRAPHIC AND UTILITY SURVEY

EA ENGINEERING – KAFB BFF – RIDGECREST DRIVE GEP CORRIDOR

SURVEYED BY R.C.W./J.M.T.
DRAWN BY T.N.T.
APPROVED BY J.M.S.

NO.	DATE	BY	REVISIONS

JOB NO. 2016.030.2
DATE 10-2016
SHEET 4 OF 6
V-104 / 6 OF 27

NOT TO SCALE

20 0 40

10 20

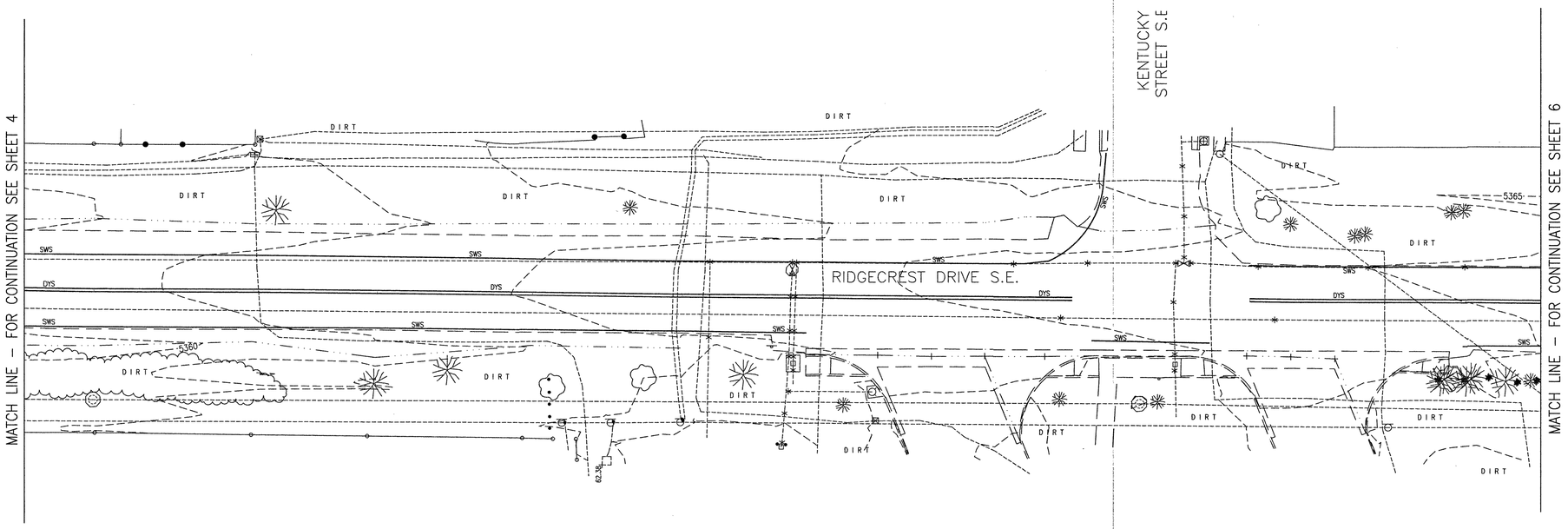

LEGEND

ABAND	POSSIBLE ABANDONED LINE	ICT	IRRIGATION CONTROL TIMER	VCP	VITRIFIED CLAY PIE
ABCWUA	ABCWUA LINE-SPOT LOCATION	INV	PIPE INVERT	VG	CONCRETE VALLEY GUTTER
ASPH	ASPHALT	IRR MH	IRRIGATION MANHOLE IN CONCRETE	W/PM	WATER LINE BY PAINT MARK
BW	BLOCK WALL	IVB	IRRIGATION VALVE BOX	WCR	CONCRETE WHEELCHAIR RAMP
C&G	CURB AND GUTTER	MB	MAILBOX	WDF	WOOD FENCE
C/PM	COMMUNICATION LINE BY PAINT MARK	MB/B	MAILBOX ON BRICKS	WGA	WOOD GATE
CBW	CONCRETE BARRIER WALL	MH	MANHOLE	WIG	WROUGHT IRON GATE
CCND	COMMUNICATION CONDUIT	MLP	METAL LIGHT POLE	WL	WATER LINE (NOT SPOTTED)
CDP	CONCRETE DRIVE PAD	MSN	METAL SIGN (GENERAL)	WLP	WOOD LIGHT POLE
CF	LANDSCAPING CRUSHER FINES	MTC	METAL TRASH CAN	WMB	WATER METER BOX
CHC	CONCRETE HEADER CURB	OHC(2)	OVERHEAD COMMUNICATION (# OF LINES)	WP	WOOD POST
CI	CAST IRON PIPE	OHE(2)	OVERHEAD ELECTRIC (# OF LINES)	WPP	WOOD POWER POLE
CLF	CHAIN LINK FENCE	PBAR	PIPE BARRIER	WRF	4-STRAND SMOOTH WIRE FENCE
CLF/BW	CHAIN LINK FENCE WITH BARBED WIRE	PIV	POST INDICATOR VALVE	WV	WATER VAULT
CMR	COMMUNICATION RISER	PS	PAINTED PARKING STRIPE	WVB	WATER VALVE BOX
CMU	CONCRETE MASONRY UNIT WALL	PVC	POLYVINYL CHLORIDE PIPE		
CND	ELECTRIC CONDUIT	R/PM	REUSE WATER LINE BY PAINT MARK	*	PAINTED UTILITY MARK
CONC	CONCRETE	RCP	REINFORCED CONCRETE PIPE	*	PAINTED ABCWUA UTILITY MARK
CP	CONCRETE PIPE	RR	LANDSCAPING RIVER ROCK (DRAINAGE)	ø	TREE TRUNK DIAMETER
CPB	COMMUNICATION PULLBOX	RRT	LANDSCAPING RAILROAD TIES		
CSW	CONCRETE SIDEWALK	RWV	REUSE WATER VAULT		CONIFEROUS TREE
D/W	CONCRETE DRIVEWAY	SAS	SANITARY SEWER		
DBL	DOUBLE	SAS/PM	SANITARY SEWER PIPE BY PAINT MARK		DECIDUOUS TREE
DPG	DOUBLE PIPE GATE	SD	STORM DRAIN		
DWS	PAINTED DASHED WHITE TRAFFIC STRIPE	SD/PM	STORM DRAIN PIPE BY PAINT MARK		SMALL DECIDUOUS TREE
DYS	PAINTED DOUBLE YELLOW TRAFFIC STRIPE	SDI	STORM DRAIN INLET		
E/PM	ELECTRIC LINE BY PAINT MARK	SDP	SERVICE DROP POLE		GROUP OF SMALL TREES
EA	EDGE OF ASPHALT	SGP	STEEL GUARD POST		
EPB	ELECTRIC PULLBOX	SP	STEEL POST		SHRUB
FH	FIRE HYDRANT	SSG	SLIDING STEEL GATE		
FL	FLOWLINE	STW	STUCCO WALL		TREE STUMP
FO/PM	FIBER OPTIC LINE BY PAINT MARK	STW/WI	STUCCO WALL WITH WROUGHT IRON FENCE		
FRD	UTILITY FROM COA DISTRIBUTION MAPS	SWS	PAINTED SOLID WHITE TRAFFIC STRIPE		
G/PM	GAS LINE BY PAINT MARK	TA	TOP OF ASPHALT		
GA	GATE	TC	TOP OF CURB		
GRV	LANDSCAPING GRAVEL	TCO	TOP OF CONCRETE		
GVB	GAS VALVE BOX	TG	TOP OF GRATE		
GW	GUY WIRE ANCHOR	TRN	ELECTRIC TRANSFORMER		
HDPE	HIGH DENSITY POLYETHYLENE PIPE	TS	TRAFFIC SIGN		
		TV/PM	CABLE TELEVISION LINE BY PAINT MARK		
		TVCAB	CABLE TELEVISION CABINET		
		TVR	CABLE TELEVISION RISER		
		TYP	TYPICAL		

FOR INFORMATION ONLY

File Path:P:\WA\2016\2016030.2\SIR\ | Plot Date: 10-24-2016
File Name:160302_TOP05.DWG | Plot Time: 1:07 pm

TOPOGRAPHIC AND UTILITY SURVEY

EA ENGINEERING - KAFB BFF - RIDGECREST DRIVE GEP CORRIDOR

SURVEYED BY R.C.W./J.M.T.
DRAWN BY T.N.T.
APPROVED BY J.M.S.

NO.	DATE	BY	REVISIONS

JOB NO. 2016.030.2
DATE 10-2016
SHEET 5 OF 6
V-105 / 7 OF 27

TEMPORARY BENCHMARK #4 (T.B.M.)

A MAG NAIL W/WASHER SET IN ASPHALT NEAR THE SOUTHEAST QUADRANT OF THE INTERSECTION OF RIDGECREST DRIVE S.E. AND LOUISIANA BOULEVARD S.E., AS SHOWN ON THIS SHEET.

ELEVATION = 5364.68 FEET (NAVD 1988)

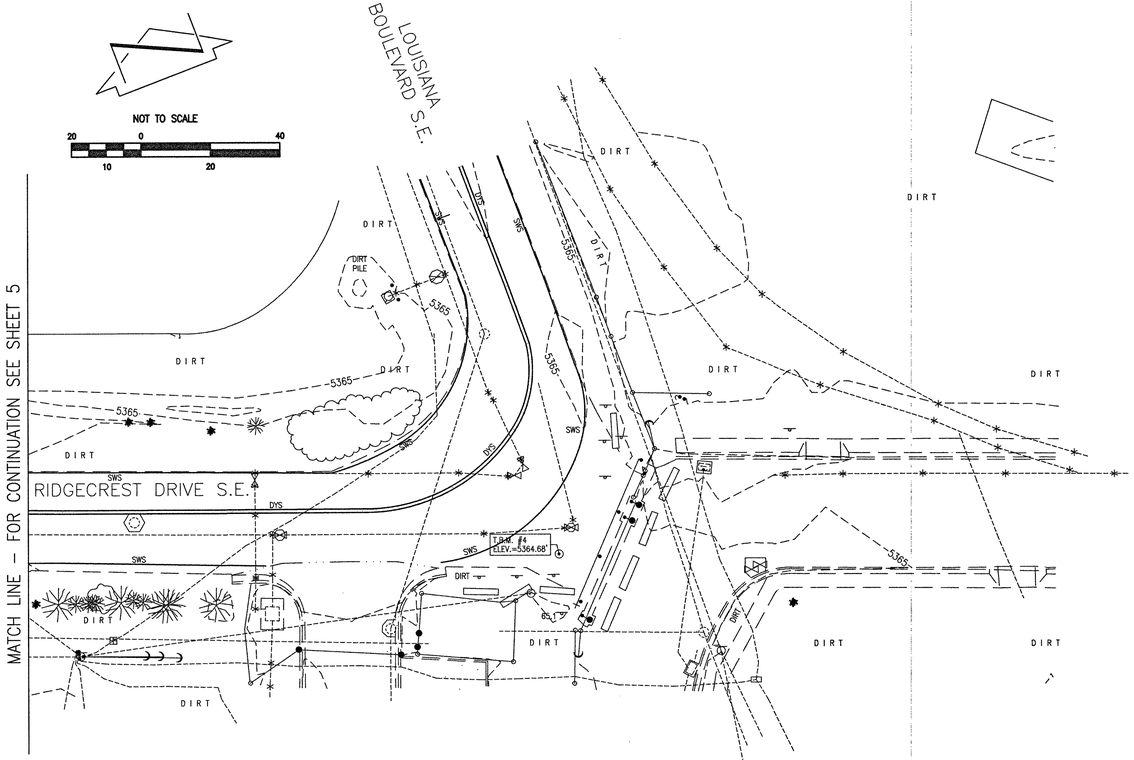

LEGEND

ABAND	POSSIBLE ABANDONED LINE	ICT	IRRIGATION CONTROL TIMER	VCP	VITRIFIED CLAY PIE
ABCWUA	ABCWUA LINE-SPOT LOCATION	INV	PIPE INVERT	VG	CONCRETE VALLEY GUTTER
ASPH	ASPHALT	IRR MH	IRRIGATION MANHOLE IN CONCRETE	W/PM	WATER LINE BY PAINT MARK
BW	BLOCK WALL	IVB	IRRIGATION VALVE BOX	WCR	CONCRETE WHEELCHAIR RAMP
C&G	CURB AND GUTTER	MB	MAILBOX	WOF	WOOD FENCE
C/PM	COMMUNICATION LINE BY PAINT MARK	MB/B	MAILBOX ON BRICKS	WOG	WOOD GATE
CBW	CONCRETE BARRIER WALL	MH	MANHOLE	WIG	WROUGHT IRON GATE
CCND	COMMUNICATION CONDUIT	MLP	METAL LIGHT POLE	WL	WATER LINE (NOT SPOTTED)
CDP	CONCRETE DRIVE PAD	MSN	METAL SIGN (GENERAL)	WLP	WOOD LIGHT POLE
CF	LANDSCAPING CRUSHER FINES	MTC	METAL TRASH CAN	WMB	WATER METER BOX
CHC	CONCRETE HEADER CURB	OHC(2)	OVERHEAD COMMUNICATION (# OF LINES)	WP	WOOD POST
CI	CAST IRON PIPE	OHE(2)	OVERHEAD ELECTRIC (# OF LINES)	WPP	WOOD POWER POLE
CLF	CHAIN LINK FENCE	PBAR	PIPE BARRIER	WRF	4-STRAND SMOOTH WIRE FENCE
CLF/BW	CHAIN LINK FENCE WITH BARBED WIRE	PIV	POST INDICATOR VALVE	WV	WATER VAULT
CMR	COMMUNICATION RISER	PS	PAINTED PARKING STRIPE	WVB	WATER VALVE BOX
CMU	CONCRETE MASONRY UNIT WALL	PVC	POLYVINYL CHLORIDE PIPE		
CND	ELECTRIC CONDUIT	R/PM	REUSE WATER LINE BY PAINT MARK	*	PAINTED UTILITY MARK
CONC	CONCRETE	RCP	REINFORCED CONCRETE PIPE	*	PAINTED ABCWUA UTILITY MARK
CP	CONCRETE PIPE	RR	LANDSCAPING RIVER ROCK (DRAINAGE)	ø	TREE TRUNK DIAMETER
CPB	COMMUNICATION PULLBOX	RRT	LANDSCAPING RAILROAD TIES		
CSW	CONCRETE SIDEWALK	RWV	REUSE WATER VAULT		CONIFEROUS TREE
D/W	CONCRETE DRIVEWAY	SAS	SANITARY SEWER		
DBL	DOUBLE	SAS/PM	SANITARY SEWER PIPE BY PAINT MARK		
DPG	DOUBLE PIPE GATE	SD	STORM DRAIN		
DWS	PAINTED DASHED WHITE TRAFFIC STRIPE	SD/PM	STORM DRAIN PIPE BY PAINT MARK		
DYS	PAINTED DOUBLE YELLOW TRAFFIC STRIPE	SDI	STORM DRAIN INLET		
E/PM	ELECTRIC LINE BY PAINT MARK	SDP	SERVICE DROP POLE		DECIDUOUS TREE
EA	EDGE OF ASPHALT	SGP	STEEL GUARD POST		
EPB	ELECTRIC PULLBOX	SP	STEEL POST		
FH	FIRE HYDRANT	SSG	SLIDING STEEL GATE		SMALL DECIDUOUS TREE
FL	FLOWLINE	STW	STUCCO WALL		
FO/PM	FIBER OPTIC LINE BY PAINT MARK	STW/WI	STUCCO WALL WITH WROUGHT IRON FENCE		
FRD	UTILITY FROM COA DISTRIBUTION MAPS	SWS	PAINTED SOLID WHITE TRAFFIC STRIPE		GROUP OF SMALL TREES
G/PM	GAS LINE BY PAINT MARK	TA	TOP OF ASPHALT		
GA	GATE	TC	TOP OF CURB		
GRV	LANDSCAPING GRAVEL	TCO	TOP OF CONCRETE		SHRUB
GVB	GAS VALVE BOX	TG	TOP OF GRATE		
GW	GUY WIRE ANCHOR	TRN	ELECTRIC TRANSFORMER	*	TREE STUMP
HDPE	HIGH DENSITY POLYETHYLENE PIPE	TS	TRAFFIC SIGN		
		TV/PM	CABLE TELEVISION LINE BY PAINT MARK		
		TVCAB	CABLE TELEVISION CABINET		
		TVR	CABLE TELEVISION RISER		
		TYP	TYPICAL		

FOR INFORMATION ONLY

File Path:P:\JOB\2016\2016030\2\SIR\ | Plot Date: 10-21-2016
File Name:160302_TOPO6.DWG | Plot Time: 08:51 am

TOPOGRAPHIC AND UTILITY SURVEY

EA ENGINEERING – KAFB BFF – RIDGECREST DRIVE GEP CORRIDOR

SURVEYED BY R.C.W./J.M.T.
DRAWN BY T.N.T.
APPROVED BY J.M.S.

NO.	DATE	BY	REVISIONS

JOB NO. 2016.030.2
DATE 10-2016
SHEET 6 OF 6
V-106 / 8 OF 27

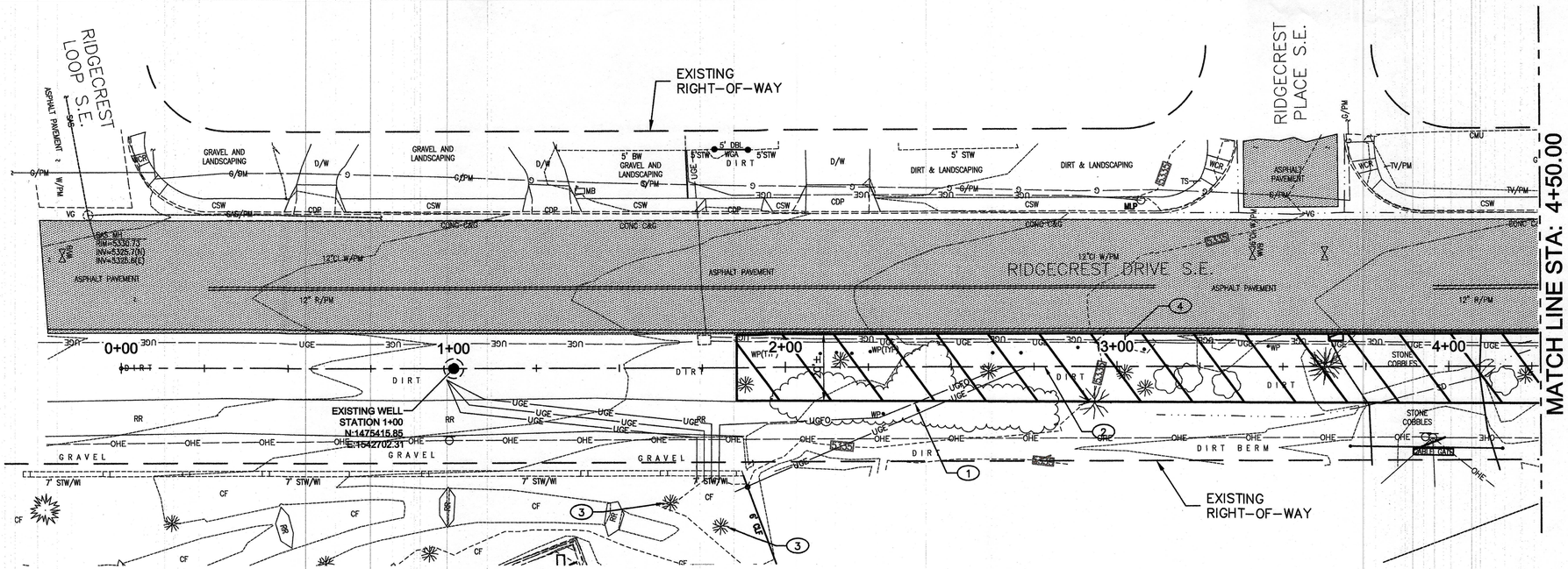

REMOVAL PLAN - STA: 0+00.00 TO STA: 4+50.00

SCALE: 1" = 20'

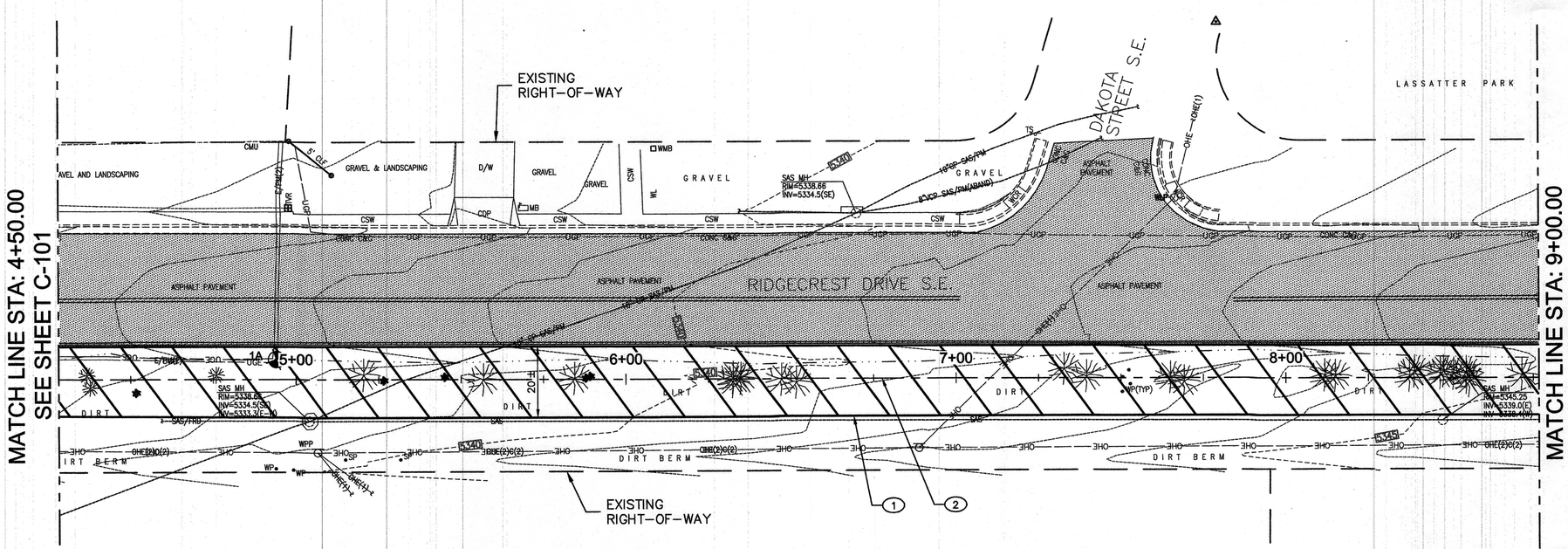

REMOVAL PLAN - STA: 4+50.00 TO STA: 9+00.00

SCALE: 1" = 20'

GENERAL NOTES:

1. CONTRACTOR SHALL PROVIDE A TRAFFIC CONTROL PLAN TO THE CITY OF ALBUQUERQUE FOR APPROVAL AND A PERMIT.
2. NON-POTABLE WATER LINE INSTALLED BY THIS PROJECT IS PRIVATE.
3. CONTRACTOR SHALL CONTACT NMOC (811) PRIOR TO START OF CONSTRUCTION.
4. MANHOLE LIDS AND VALVE BOX SHALL BE ADJUSTED TO FINISH GRADE WHERE APPLICABLE.

KEYED NOTES:

1. CLEAR AND GRUB AND DISPOSE OF EXISTING TREES AND VEGETATION IN THIS AREA PRIOR TO EXCAVATION.
2. PROJECT BASELINE.
3. CLEAR AND GRUB AND DISPOSE OF EXISTING TREE.
4. IF NECESSARY, REMOVE AND SALVAGE EXISTING SPEED LIMIT SIGN. REINSTALL AFTER CONSTRUCTION IS COMPLETE.

LEGEND:

- EXISTING ASPHALT PAVEMENT (TO REMAIN UNDISTURBED)
- EXISTING RIGHT-OF-WAY
- CONSTRUCTION LIMITS

SCALE: 1" = 20'

20' 0 20' 40' 60' Feet

COA PROJECT NO: 586082

GEORGE NEMETH NEW MEXICO 12284 REGISTERED PROFESSIONAL ENGINEER
5-3-17

NO.	REVISION DESCRIPTION	DATE	BY
1			
2			
3			
4			
5			

Name
Location

KIRTLAND AIR FORCE BASE
BULK FUELS FACILITY
KAFB - 106239 CONVEYANCE LINE

REMOVAL SHEET
STA: 0+00 (BOP) TO STA: 9+00

SMITH ENGINEERING COMPANY
2201 SAN PEDRONE BLDG 4, SUITE 200
ALBUQUERQUE, NM 87110

Design Review Committee: APPROVED MAY 19 2017 DESIGN REVIEW COMMITTEE
City Engineer Approval: APPROVED JUN 08 2017 CITY ENGINEER

Last Design Update

No. / Day / Yr.	No. / Day / Yr.

JOB NO: 116112
DATE: MAY 3, 2017
SHEET NO: C-101 / 9 OF 27

Q:\SEC-----PROJECTS\116112 KAFB Groundwater Reclam Pipeline\ENGINEERING\CADD\PLANSET\C-101-REMOVAL SHEET.dwg May 03, 2017 - 9:16am Saved By: Jamier

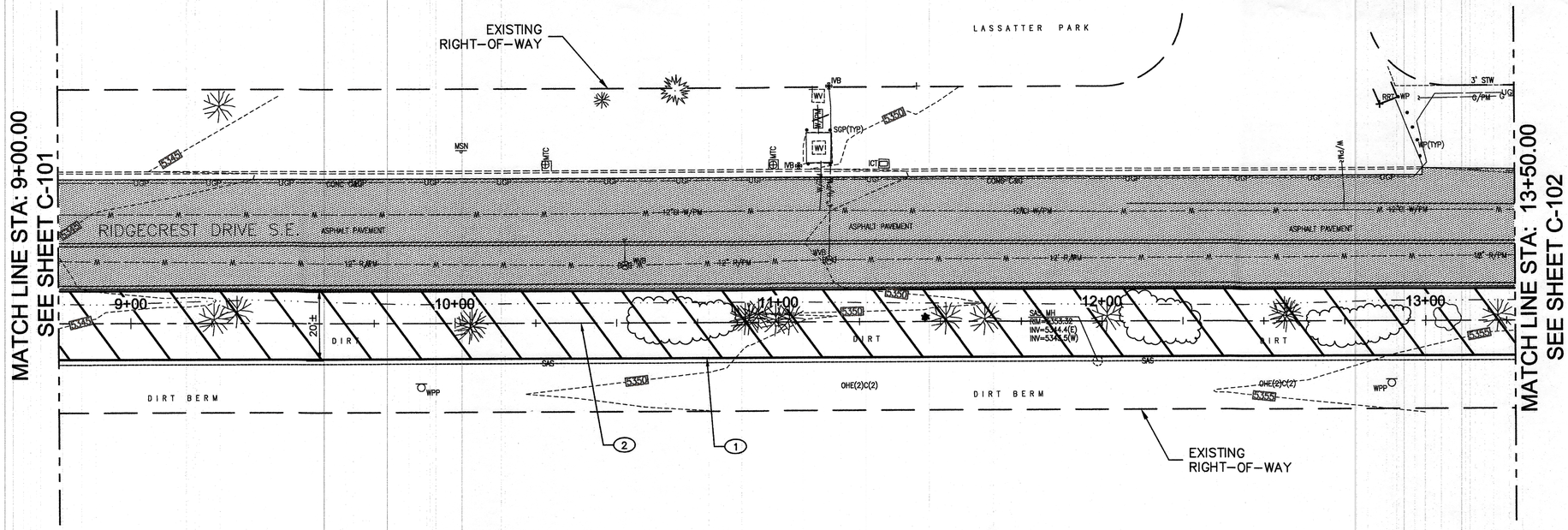

REMOVAL PLAN - STA: 9+00.00 TO STA: 13+50.00

SCALE: 1" = 20'

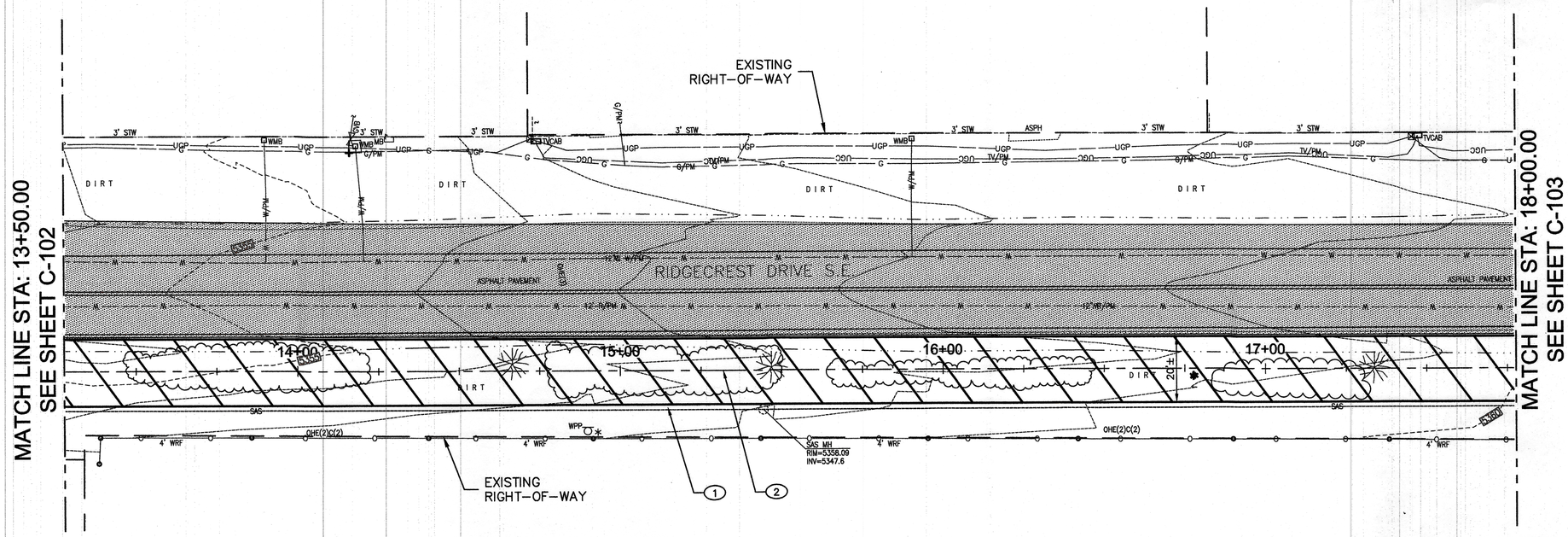

REMOVAL PLAN - STA: 13+50.00 TO STA: 18+00.00

SCALE: 1" = 20'

GENERAL NOTES:

1. CONTRACTOR SHALL PROVIDE A TRAFFIC CONTROL PLAN TO THE CITY OF ALBUQUERQUE FOR APPROVAL AND A PERMIT.
2. NON-POTABLE WATER LINE INSTALLED BY THIS PROJECT IS PRIVATE.
3. CONTRACTOR SHALL CONTACT NMOC (811) PRIOR TO START OF CONSTRUCTION.
4. MANHOLE LIDS AND VALVE BOX SHALL BE ADJUSTED TO FINISH GRADE WHERE APPLICABLE.

KEYED NOTES:

(1) CLEAR AND GRUB AND DISPOSE OF EXISTING TREES AND VEGETATION IN THIS AREA PRIOR TO EXCAVATION.

(2) PROJECT BASELINE.

LEGEND:

EXISTING ASPHALT PAVEMENT (TO REMAIN UNDISTURBED)

EXISTING RIGHT-OF-WAY

CONSTRUCTION LIMITS

SCALE: 1" = 20'

20' 0 20' 40' 60' Feet

COA PROJECT NO: 586082

GEORGE NEMETH NEW MEXICO 12284 REGISTERED PROFESSIONAL ENGINEER
5-3-17

NO.	REVISION DESCRIPTION	DATE	BY
1			
2			
3			
4			
5			

Name
Location

KIRTLAND AIR FORCE BASE
BULK FUELS FACILITY
KAFB - 106239 CONVEYANCE LINE

REMOVAL SHEET
STA: 9+00 TO STA: 18+00

Design Review Committee: APPROVED MAY 19 2017 DESIGN REVIEW COMMITTEE

City Engineer Approval: APPROVED JUN 08 2017 CITY ENGINEER

Last Design Update

No. / Day / Yr.	No. / Day / Yr.

SMITH ENGINEERING COMPANY
2201 SAN PEDRO NE BLDG 4, SUITE 200
ALBUQUERQUE, NM 87110

JOB NO: 116112
DATE: MAY 3, 2017
SHEET NO: C-102 / 10 OF 27

Q:\SEC-----PROJECTS\116112 KAFB Groundwater Reclam Pipeline\ENGINEERING\CADD\PLANSET\C-102-REMOVAL SHEET.dwg May 03, 2017 - 10:11am Saved By: jsmilev

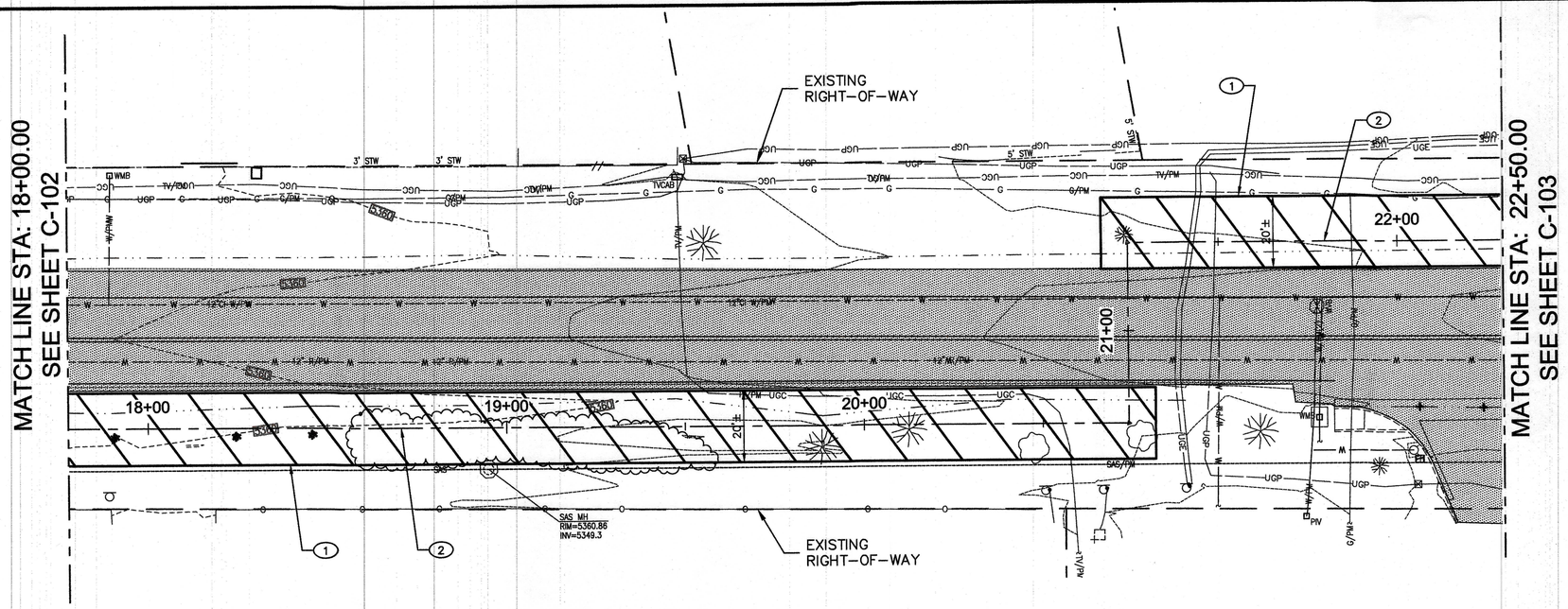

REMOVAL PLAN STA: 18+00.00 TO STA: 22+50.00

SCALE: 1" = 20'

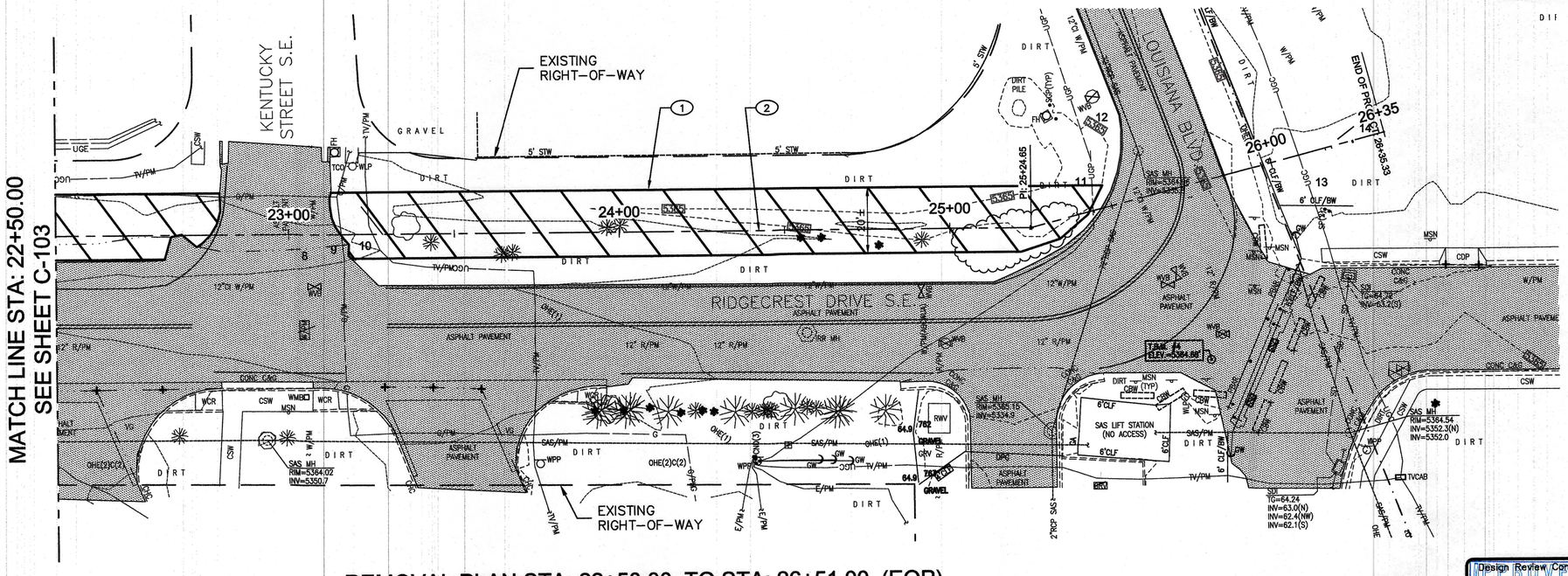

REMOVAL PLAN STA: 22+50.00 TO STA: 26+51.00 (EOP)

SCALE: 1" = 20'

GENERAL NOTES:

1. CONTRACTOR SHALL PROVIDE A TRAFFIC CONTROL PLAN TO THE CITY OF ALBUQUERQUE FOR APPROVAL AND A PERMIT.
2. NON-POTABLE WATER LINE INSTALLED BY THIS PROJECT IS PRIVATE.
3. CONTRACTOR SHALL CONTACT NMOC (811) PRIOR TO START OF CONSTRUCTION.
4. MANHOLE LIDS AND VALVE BOX SHALL BE ADJUSTED TO FINISH GRADE WHERE APPLICABLE.

KEYED NOTES:

(1) CLEAR AND GRUB AND DISPOSE OF EXISTING TREES AND VEGETATION IN THIS AREA PRIOR TO EXCAVATION.

(2) PROJECT BASELINE.

LEGEND:

EXISTING ASPHALT PAVEMENT (TO REMAIN UNDISTURBED)

EXISTING RIGHT-OF-WAY

CONSTRUCTION LIMITS

SCALE: 1" = 20'

20' 0 20' 40' 60' Feet

COA PROJECT NO: 586082

GEORGE NEMETH
NEW MEXICO
12284
REGISTERED PROFESSIONAL ENGINEER
5-3-17

NO.	REVISION DESCRIPTION	DATE	BY
1			
2			
3			
4			
5			

Name
Location

KIRTLAND AIR FORCE BASE
BULK FUELS FACILITY
KAFB - 106239 CONVEYANCE LINE

REMOVAL SHEET
STA: 18+00 TO STA: 26+25.60 (EOP)

Design Review Committee: APPROVED MAY 19 2017 DESIGN REVIEW COMMITTEE

City Engineer Approval: APPROVED JUN 08 2017 CITY ENGINEER

Last Design Update

No. / Day / Yr.	No. / Day / Yr.

SMITH ENGINEERING COMPANY
2201 SAN PEDRONE BLDG 4, SUITE 200
ALBUQUERQUE, NM 87110

JOB NO: 116112
DATE: MAY 3, 2017
SHEET NO: C-103 / 11 OF 27

Q:\SED-----PROJECTS\116112 KAFB Groundwater Recirc Pipeline\ENGINEERING\CADD\PLANSET\C-103-REMOVAL SHEET.dwg May 03, 2017 - 10:13am Saved By: jamiew

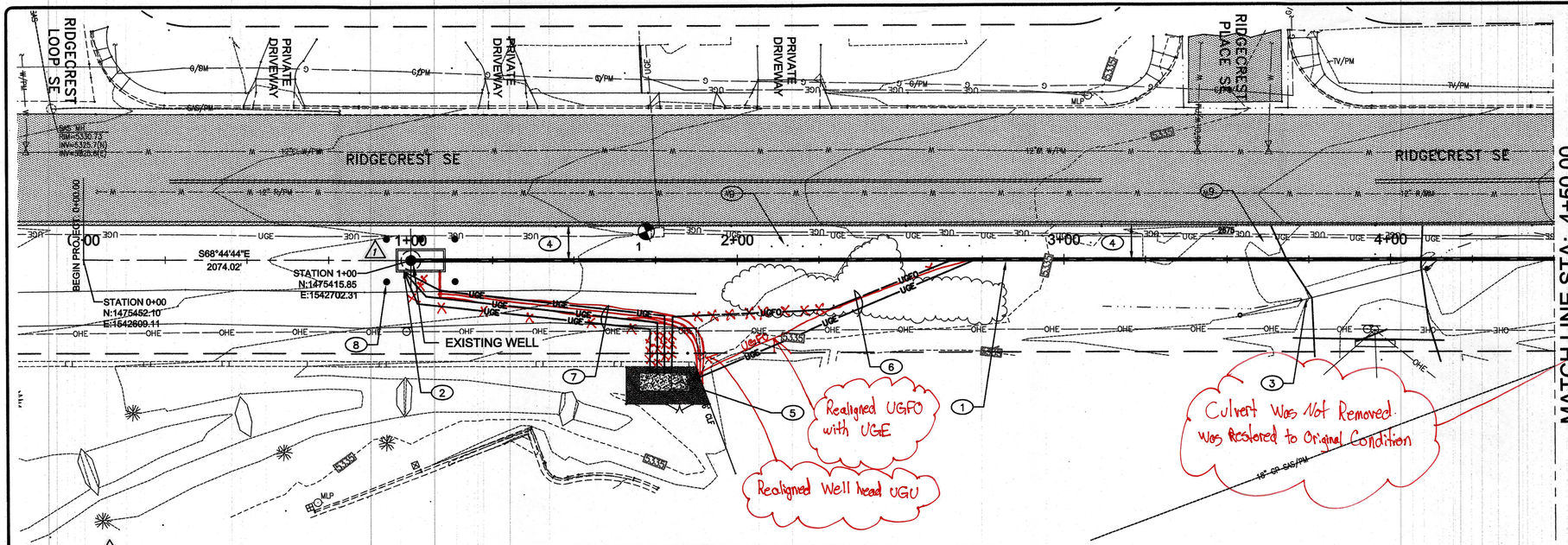

	NORTHING–GRID	EASTING–GRID	ELEVATION	DESCRIPTION
WELL KAFB–106239	1475416.28	1542702.49	5332.67	TOP LID–NORTH SIDE

PLAN - STA: 0+00.00 TO STA: 4+50.00

SCALE: 1" = 20'

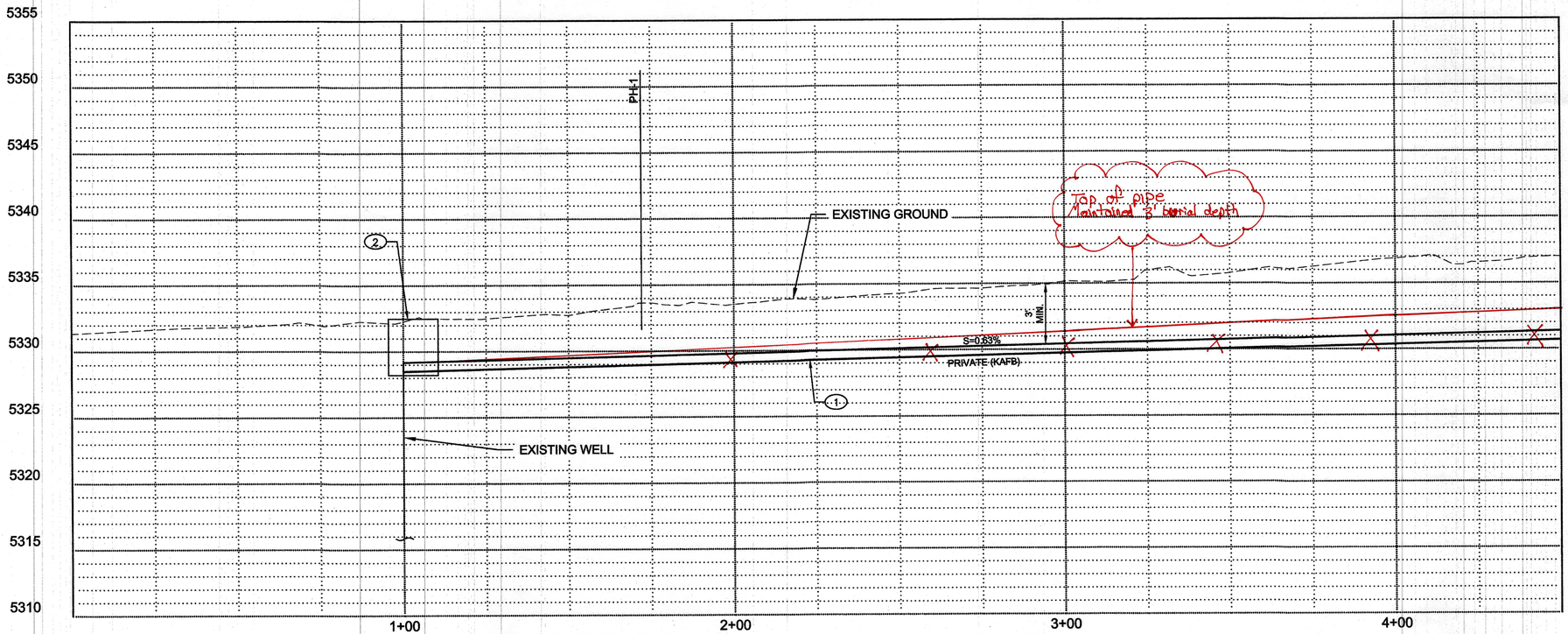

PROFILE - STA: 0+00.00 TO STA: 4+50.00

GENERAL NOTES:

1. MAINTAIN A MINIMUM OF 3 FEET OF SOIL COVER OVER INSTALLED 4"x8" DOUBLE WALL PIPE.
2. PROVIDE A MINIMUM OF 18" OF VERTICAL SEPARATION WHEN CROSSING OVER OR UNDER EXISTING UTILITIES.

KEYED NOTES:

1. NEW PRIVATE 4"x8" HDPE PIPELINE. SEE C-301, DETAIL 2 FOR TYP. TRENCH SECTION
2. NEW REINFORCED PRECAST CONCRETE WELL VAULT W/ - 5 GUARD POSTS. SEE C-302 DETAIL 1 FOR VAULT DETAIL.
3. REMOVE AND SALVAGE EXIST. CULVERT PIPE. RESET TO EXISTING ELEVATION AFTER PIPELINE IS INSTALLED AND BACKFILLED.
4. INSTALL PIPELINE 10' OFF EXISTING EDGE OF PAVEMENT UNLESS OTHERWISE NOTED.
5. ELECTRICAL EQUIPMENT YARD. SEE C-401 FOR ENLARGED PLAN.
6. SEE C-301, DETAIL 5 FOR TRENCH SECTION.
7. SEE E-501, DETAIL 2 FOR TRENCH SECTION.
8. GUARD POST (TYP. OF 5) SEE C-301, DETAIL 4.
9. RESTORE EXISTING SWALE AFTER PIPELINE INSTALLATION IS COMPLETE. SEED SWALE AND ALL GROUND DISTURBED BY CONSTRUCTION WITH COA STANDARD SPEC. (1012) NATIVE GRASS SEED MIX AND PROCEDURES.

HORIZONTAL SCALE: 1" = 20'
VERTICAL SCALE: 1" = 5'

20' 0 20' 40' 60' HORIZ.
5' 0 5' 10' 15' VERT.

POTHOLE TABLE

NO.	DESCRIPTION	DEPTH
1	2" DIA. ELEC.	25"

COA PROJECT NO: 586082

Design Review Committee: APPROVED MAY 19 2017 DESIGN REVIEW COMMITTEE

City Engineer Approval: APPROVED JUN 08 2017 CITY ENGINEER

Last Design Update

No. / Day / Yr.	No. / Day / Yr.

GEORGE NEMETH NEW MEXICO 12284 REGISTERED PROFESSIONAL ENGINEER 5-3-17

NO.	REVISION DESCRIPTION	DATE	BY
1	WELL LOCATION ADDED	03-2018	JMS
2			
3			
4			
5			

Name
Location

KIRTLAND AIR FORCE BASE
BULK FUELS FACILITY
KAFB – 106239

CONVEYANCE LINE INSTALLATION
CONVEYANCE STA: 0+00 TO STA: 4+50

SMITH ENGINEERING COMPANY
2201 SAN PEDRO NE BLDG 4, SUITE 200
ALBUQUERQUE, NM 87110

JOB NO: 116112
DATE: MAY 3, 2017
SHEET NO: C-201 / 12 OF 27

G:\SEC----PROJECTS\116112 KAFB Groundwater Reclam Pipeline\ENGINEERING\CADD\PLANSET\C-201 - Plan and Profile.dwg May 03, 2017 - 9:22am Saved By: jsmiley

MATCH LINE STA: 4+50.00
SEE SHEET C-201

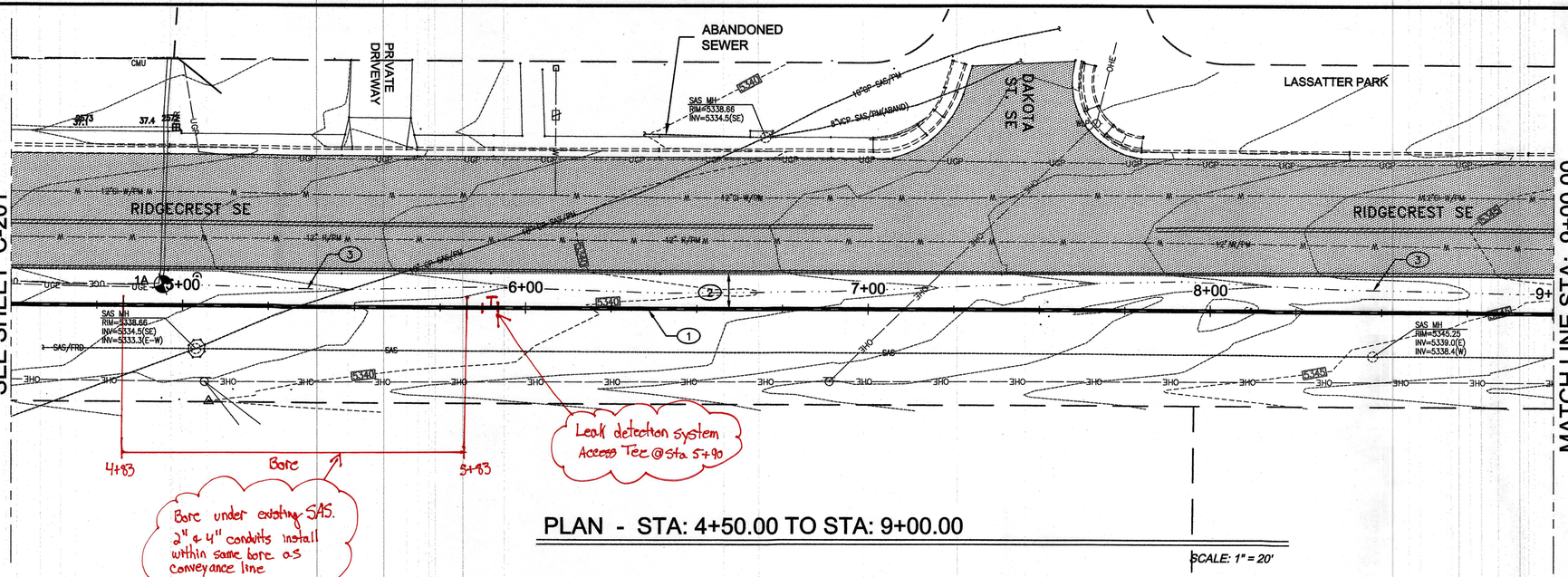

PLAN - STA: 4+50.00 TO STA: 9+00.00

SCALE: 1" = 20'

MATCH LINE STA: 9+00.00
SEE SHEET C-203

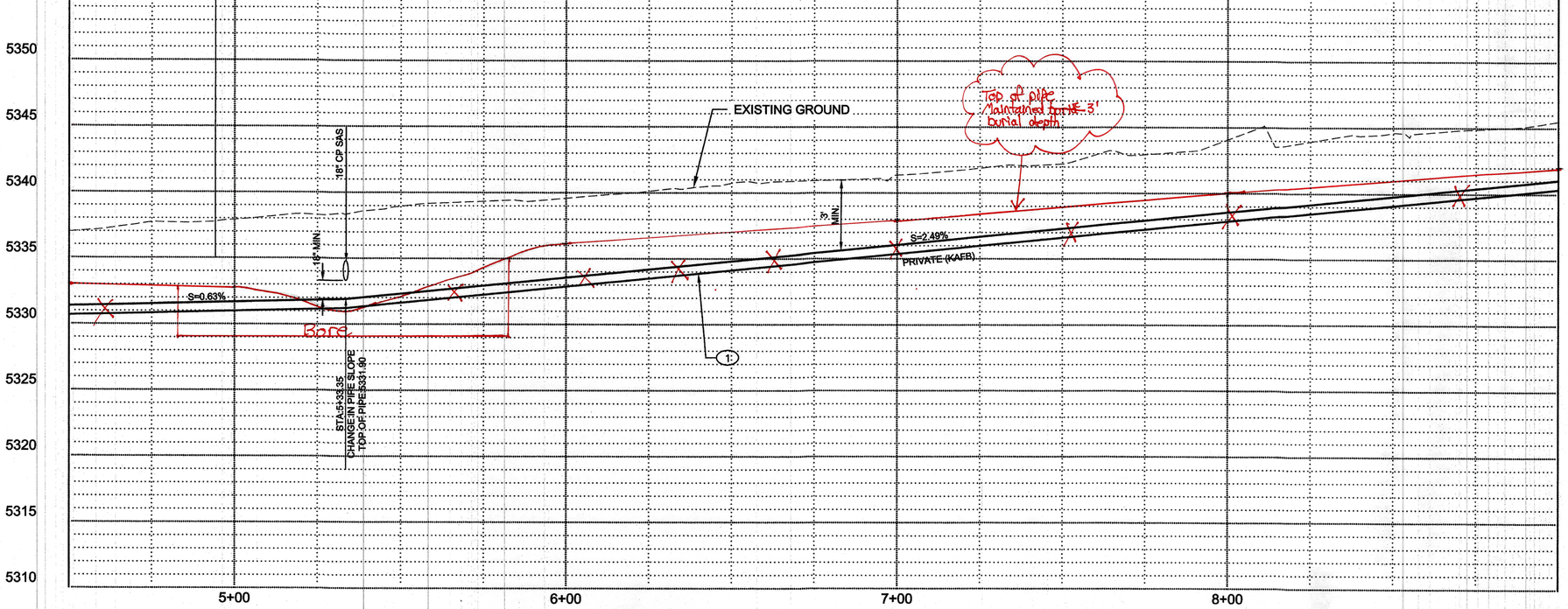

PROFILE - STA: 4+50.00 TO STA: 9+00.00

GENERAL NOTES:

1. MAINTAIN A MINIMUM OF 3 FEET OF SOIL COVER OVER INSTALLED 4"x8" DOUBLE WALL PIPE.
2. PROVIDE A MINIMUM OF 18" OF VERTICAL SEPARATION WHEN CROSSING OVER OR UNDER EXISTING UTILITIES.

KEYED NOTES:

1. NEW PRIVATE 4"x8" HDPE PIPELINE. SEE C-301, DETAIL 2 FOR TYP. TRENCH SECTION.
2. INSTALL PIPELINE 10' OFF EXISTING EDGE OF PAVEMENT. UNLESS OTHERWISE NOTED.
3. RESTORE EXISTING SWALE AFTER PIPELINE INSTALLATION IS COMPLETE. SEED SWALE AND ALL GROUND DISTURBED BY CONSTRUCTION WITH COA STANDARD SPEC. (1012) NATIVE GRASS SEED MIX AND PROCEDURES.

HORIZONTAL SCALE: 1" = 20'
VERTICAL SCALE: 1" = 5'

20' 0 20' 40' 60' HORIZ.
5' 0 5' 10' 15' VERT.

POTHOLE TABLE

NO.	DESCRIPTION	DEPTH
1A	2- 1.5" DIA. ELEC.	33"

COA PROJECT NO: 586082

Design Review Committee: APPROVED MAY 19 2017 DESIGN REVIEW COMMITTEE
City Engineer Approval: JUN 08 2017 CITY ENGINEER

Last Design Update

No. / Day / Yr.	No. / Day / Yr.

GEORGE NEMETH NEW MEXICO 12284 REGISTERED PROFESSIONAL ENGINEER
5-3-17

NO.	DATE	REVISION DESCRIPTION	BY
5			
4			
3			
2			
1			

Name
Location

KIRTLAND AIR FORCE BASE
BULK FUELS FACILITY
KAFB - 106239 CONVEYANCE LINE

CONVEYANCE LINE INSTALLATION
STA: 4+50 TO STA: 9+00

SMITH ENGINEERING COMPANY
2201 SAN PEDRO NE BLDG 4, SUITE 200
ALBUQUERQUE, NM 87110

JOB NO: 116112
DATE: MAY 3, 2017
SHEET NO: C-202 / 13 OF 27

Q:\SEC-----PROJECTS\116112 KAFB Groundwater Reclam Pipeline\ENGINEERING\CADD\PLANSET\C-202-Plan and Profile.dwg May 03, 2017 - 9:29am Saved By: jamiep

MATCH LINE STA: 9+00.00
SEE SHEET C-202

MATCH LINE STA: 13+50.00
SEE SHEET C-204

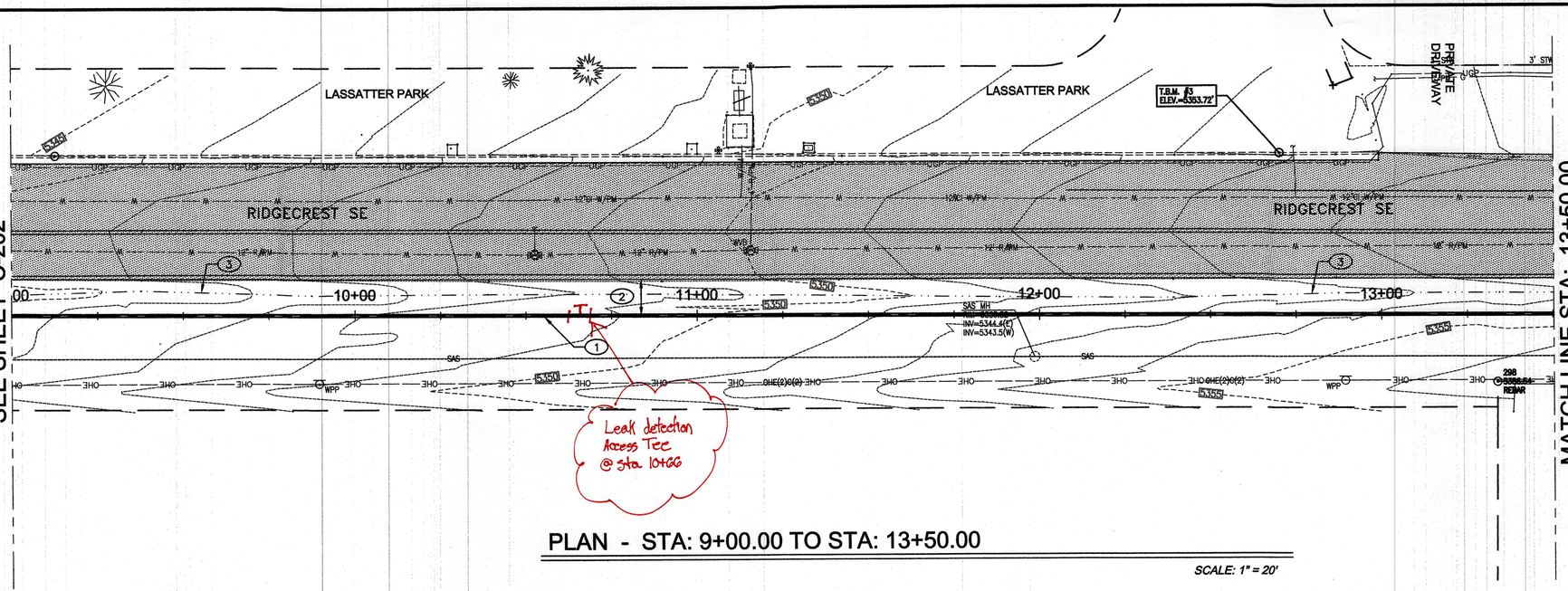

PLAN - STA: 9+00.00 TO STA: 13+50.00

SCALE: 1" = 20'

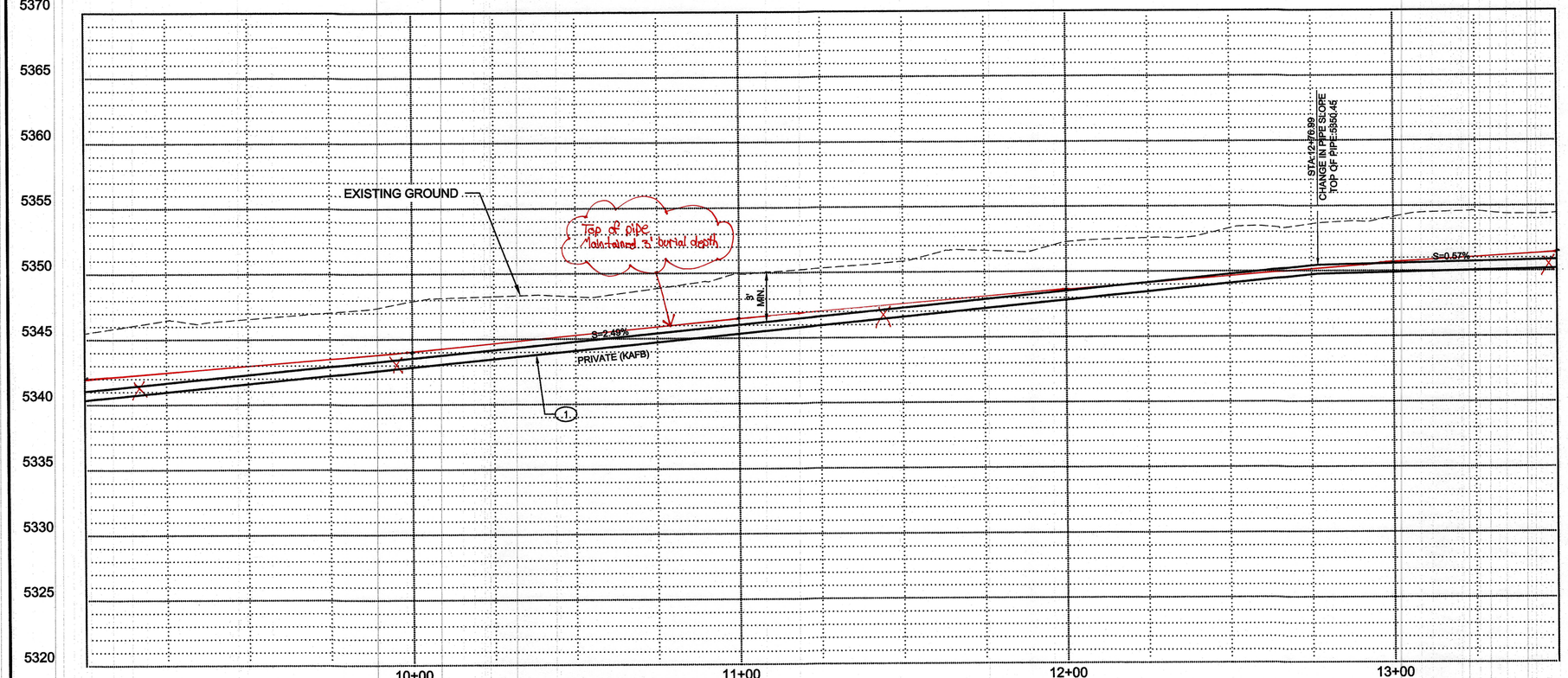

PROFILE - STA: 9+00.00 TO STA: 13+50.00

GENERAL NOTES:

1. MAINTAIN A MINIMUM OF 3 FEET OF SOIL COVER OVER INSTALLED 4"x8" DOUBLE WALL PIPE.
2. PROVIDE A MINIMUM OF 18" OF VERTICAL SEPARATION WHEN CROSSING OVER OR UNDER EXISTING UTILITIES.

KEYED NOTES:

1. NEW PRIVATE 4"x8" HDPE PIPELINE. SEE C-301, DETAIL 2 FOR TYP. TRENCH SECTION.
2. INSTALL PIPELINE 10' OFF EXISTING EDGE OF PAVEMENT. UNLESS OTHERWISE NOTED.
3. RESTORE EXISTING SWALE AFTER PIPELINE INSTALLATION IS COMPLETE. SEED SWALE AND ALL GROUND DISTURBED BY CONSTRUCTION WITH COA STANDARD SPEC. (1012) NATIVE GRASS SEED MIX AND PROCEDURES.

HORIZONTAL SCALE: 1" = 20'
VERTICAL SCALE: 1" = 5'

20' 0 20' 40' 60' HORIZ.
5' 0 5' 10' 15' VERT.

COA PROJECT NO: 586082

GEORGE NEMETH
NEW MEXICO
12284
REGISTERED PROFESSIONAL ENGINEER
5-3-17

NO.	DATE	REVISION DESCRIPTION	BY
1			
2			
3			
4			
5			

Name
Location

KIRTLAND AIR FORCE BASE
BULK FUELS FACILITY
KAFB - 106239 CONVEYANCE LINE

CONVEYANCE LINE INSTALLATION
STA: 9+00 TO STA: 13+50

Design Review Committee: APPROVED MAY 19 2017 DESIGN REVIEW COMMITTEE
City Engineer Approval: JUN 08 2017 CITY ENGINEER
Last Design Update

No. / Day / Yr.	No. / Day / Yr.

SMITH ENGINEERING COMPANY
2201 SAN PEDRO NE BLDG 4, SUITE 200
ALBUQUERQUE, NM 87110

JOB NO: 116112
DATE: MAY 3, 2017
SHEET NO: C-203 / 14 OF 27

G:\SEC----PROJECTS\116112 KAFB Groundwater Reclam Pipeline\ENGINEERING\CADD\PLANSET\C-203-Plan and Profile.dwg May 03, 2017 - 9:31am Saved By: jennlep

MATCH LINE STA: 13+50.00
SEE SHEET C-203

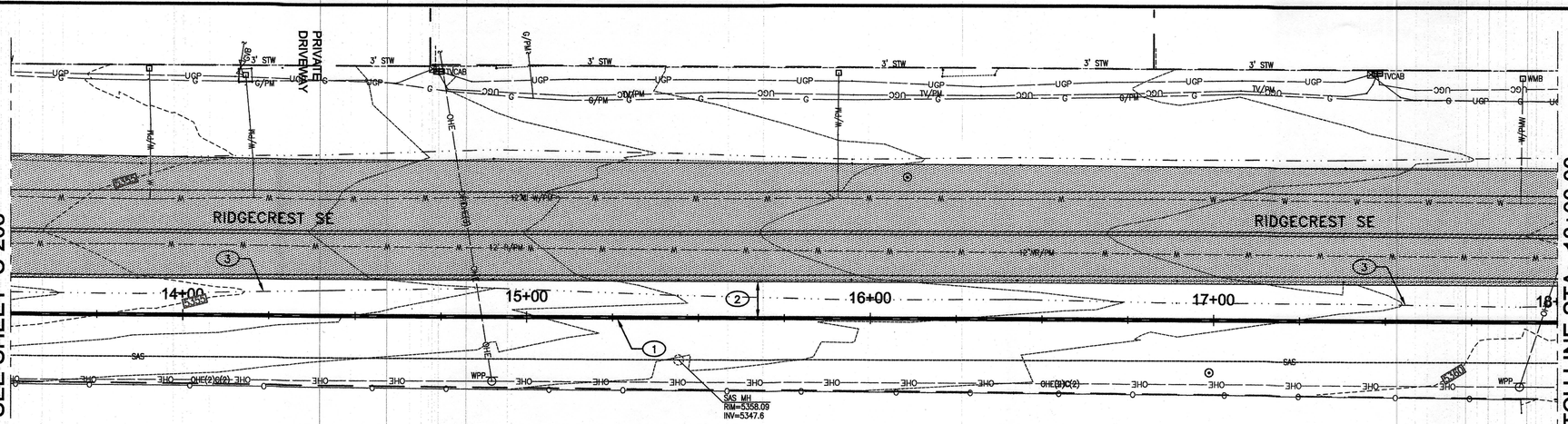

MATCH LINE STA: 18+00.00
SEE SHEET C-205

PLAN - STA: 13+50.00 TO STA: 18+00.00

SCALE: 1" = 20'

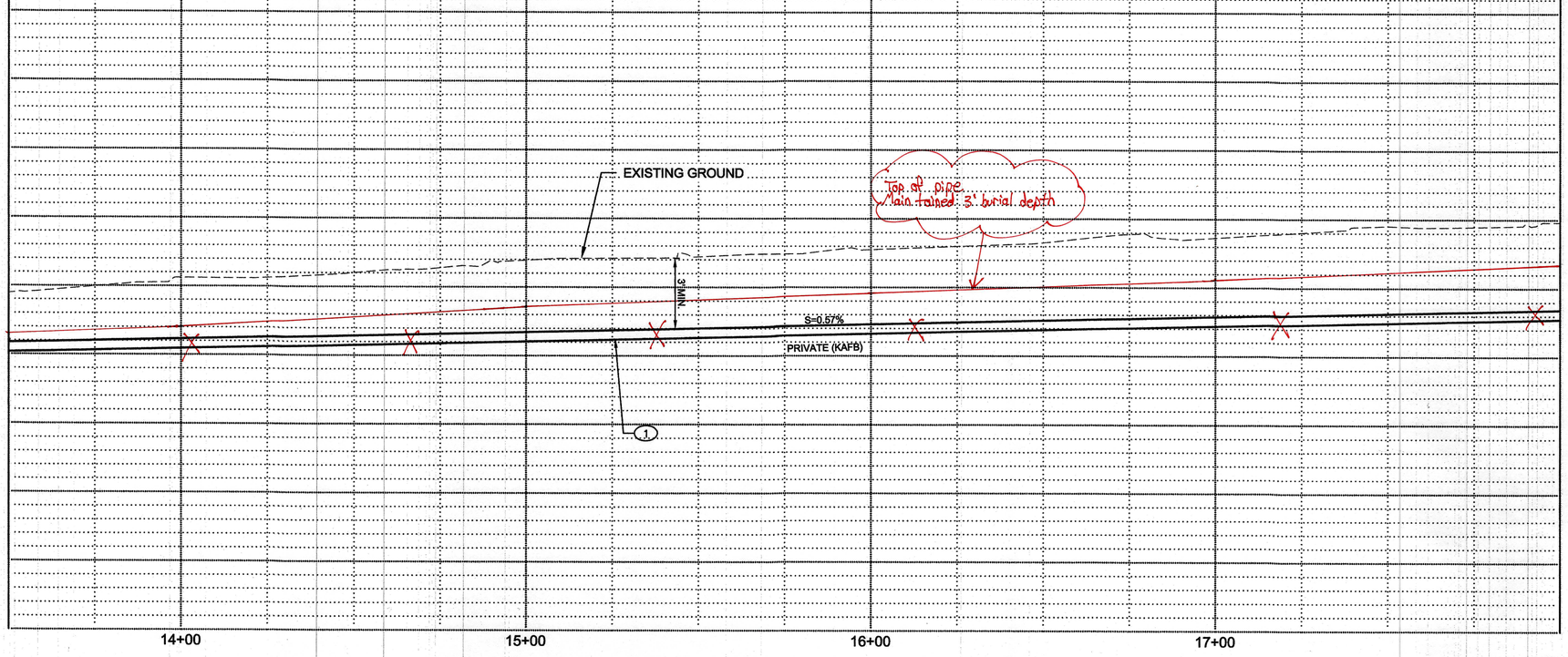

PROFILE - STA: 13+50.00 TO STA: 18+00.00

GENERAL NOTES:

1. MAINTAIN A MINIMUM OF 3 FEET OF SOIL COVER OVER INSTALLED 4"x8" DOUBLE WALL PIPE.
2. PROVIDE A MINIMUM OF 18" OF VERTICAL SEPARATION WHEN CROSSING OVER OR UNDER EXISTING UTILITIES.

KEYED NOTES:

1. NEW PRIVATE 4"x8" HDPE PIPELINE. SEE C-301, DETAIL 2 FOR TYP. TRENCH SECTION.
2. INSTALL PIPELINE 10' OFF EXISTING EDGE OF PAVEMENT. UNLESS OTHERWISE NOTED.
3. RESTORE EXISTING SWALE AFTER PIPELINE INSTALLATION IS COMPLETE. SEED SWALE AND ALL GROUND DISTURBED BY CONSTRUCTION WITH COA STANDARD SPEC. (1012) NATIVE GRASS SEED MIX AND PROCEDURES.

HORIZONTAL
SCALE: 1" = 20'
VERTICAL
SCALE: 1" = 5'

20' 0 20' 40' 60' HORIZ.
5' 0 5' 10' 15' VERT.

COA PROJECT NO: 586082

GEORGE NEMETH
NEW MEXICO
12284
REGISTERED PROFESSIONAL ENGINEER
5-3-17

NO.	REVISION DESCRIPTION	DATE	BY
1	Name Location		
2			
3			
4			
5			

KIRTLAND AIR FORCE BASE
BULK FUELS FACILITY
KAFB – 106239 CONVEYANCE LINE

CONVEYANCE LINE INSTALLATION
STA: 13+50 TO STA: 18+00

SMITH ENGINEERING COMPANY
2201 SAN PEDRO NE BLDG 4, SUITE 200
ALBUQUERQUE, NM 87110

Design Review Committee: APPROVED MAY 19 2017 DESIGN REVIEW COMMITTEE
City Engineer Approval: APPROVED JUN 08 2017 CITY ENGINEER

Last Design Update

No. / Day / Yr.	No. / Day / Yr.

JOB NO: 116112
DATE: MAY 3, 2017
SHEET NO: C-204 / 15 OF 27

Q:\SEC——PROJECTS\116112 KAFB Groundwater Reclam Pipeline\ENGINEERING\CADD\PLANSET\C-204-plan and Profile.dwg May 03, 2017 - 9:35am Saved By: jamiep

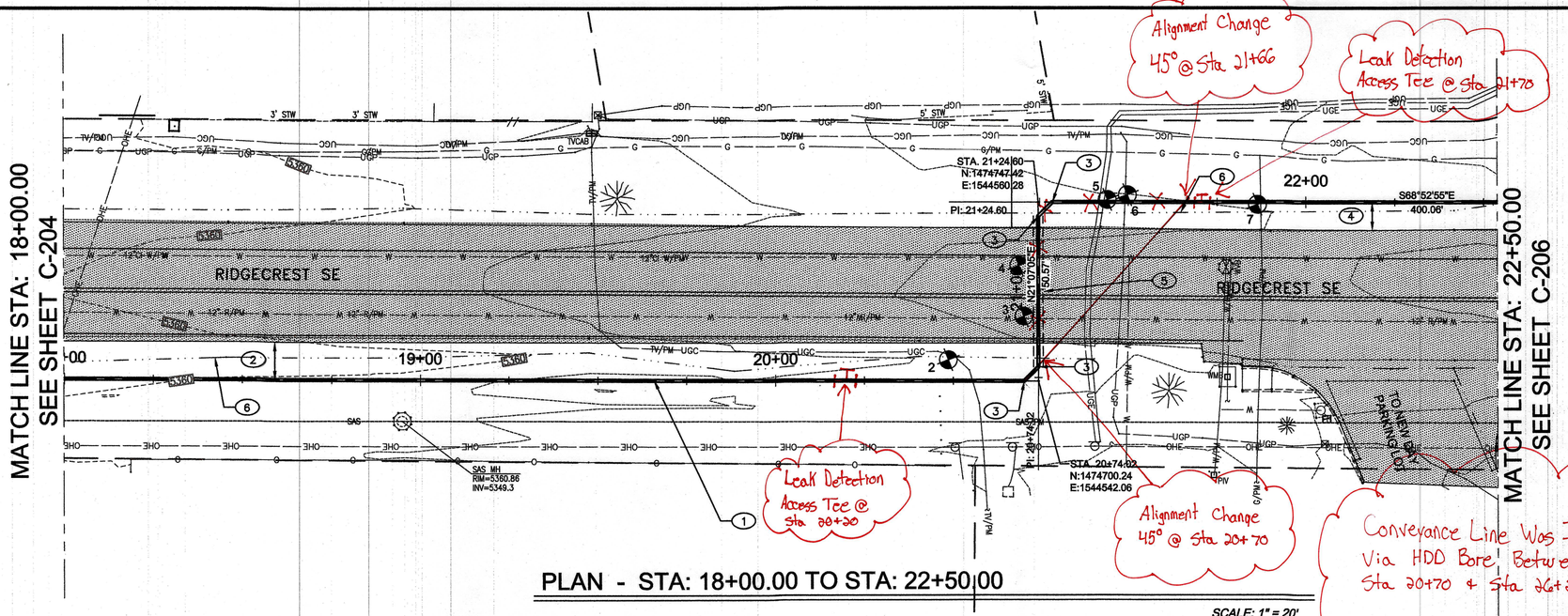

PLAN - STA: 18+00.00 TO STA: 22+50.00

SCALE: 1" = 20'

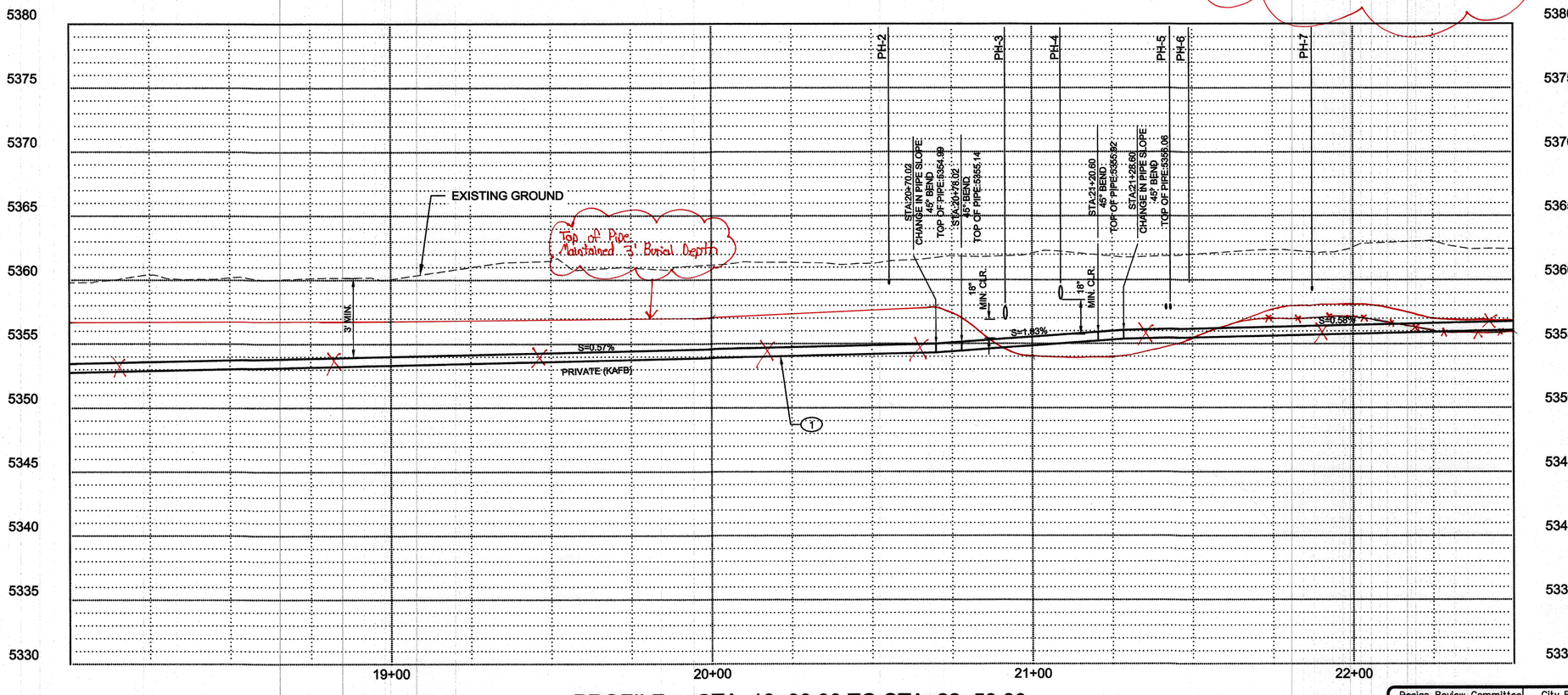

PROFILE - STA: 18+00.00 TO STA: 22+50.00

GENERAL NOTES:

1. MAINTAIN A MINIMUM OF 3 FEET OF SOIL COVER OVER INSTALLED 4"x8" DOUBLE WALL PIPE.
2. PROVIDE A MINIMUM OF 18" OF VERTICAL SEPARATION WHEN CROSSING OVER OR UNDER EXISTING UTILITIES.

KEYED NOTES:

1. NEW PRIVATE 4"x8" HDPE PIPELINE. SEE C-301, DETAIL 2 FOR TYP. TRENCH SECTION.
2. INSTALL PIPELINE 10' OFF EXISTING EDGE OF PAVEMENT. UNLESS OTHERWISE NOTED.
3. 45° BEND
4. INSTALL PIPELINE 8' OFF EXISTING EDGE OF PAVEMENT. UNLESS OTHERWISE NOTED.
5. HORIZONTAL DIRECTIONAL DRILL FROM STA. 20+74.02 TO STA. 21+24.60. EXISTING ASPHALT TO REMAIN UNDISTURBED.
6. RESTORE EXISTING SWALE AFTER PIPELINE INSTALLATION IS COMPLETE. SEED SWALE AND ALL GROUND DISTURBED BY CONSTRUCTION WITH COA STANDARD SPEC. (1012) NATIVE GRASS SEED MIX AND PROCEDURES.

HORIZONTAL SCALE: 1" = 20'
VERTICAL SCALE: 1" = 5'

20' 0 20' 40' 60' HORIZ.
5' 0 5' 10' 15' VERT.

POTHOLE TABLE

NO.	DESCRIPTION	DEPTH
2	1.5" DIA. HDPE CATV	17"
3	12" DIA. PVC WATER	50"
4	12" DIA. CI WATER	32"
5	1" DIA. ELEC	48"
6	1" DIA. TEL	28"
7	1.5" DIA. HDPE GAS	31"

COA PROJECT NO: 586082

Design Review Committee: APPROVED MAY 19 2017 DESIGN REVIEW COMMITTEE

City Engineer Approval: APPROVED JUN 08 2017 CITY ENGINEER

Last Design Update

No. / Day / Yr.		No. / Day / Yr.	

GEORGE NEMETH NEW MEXICO 12284 REGISTERED PROFESSIONAL ENGINEER 5-3-17

NO.	REVISION DESCRIPTION	DATE	BY
1			
2			
3			
4			
5			

Name
Location

KIRTLAND AIR FORCE BASE
BULK FUELS FACILITY
KAFB - 106239 CONVEYANCE LINE

CONVEYANCE LINE INSTALLATION
STA: 18+00 TO STA: 22+50

SMITH ENGINEERING COMPANY
2201 SAN PEDRO NE BLDG 4, SUITE 200
ALBUQUERQUE, NM 87110

JOB NO: 116112
DATE: MAY 3, 2017
SHEET NO: C-205 / 16 OF 27

Q:\SEC——PROJECTS\116112 KAFB Groundwater Restam Pipeline\ENGINEERING\CADD\PLANSET\C-205-Plan and Profile.dwg May 03, 2017 - 9:38am Saved By: jamiep

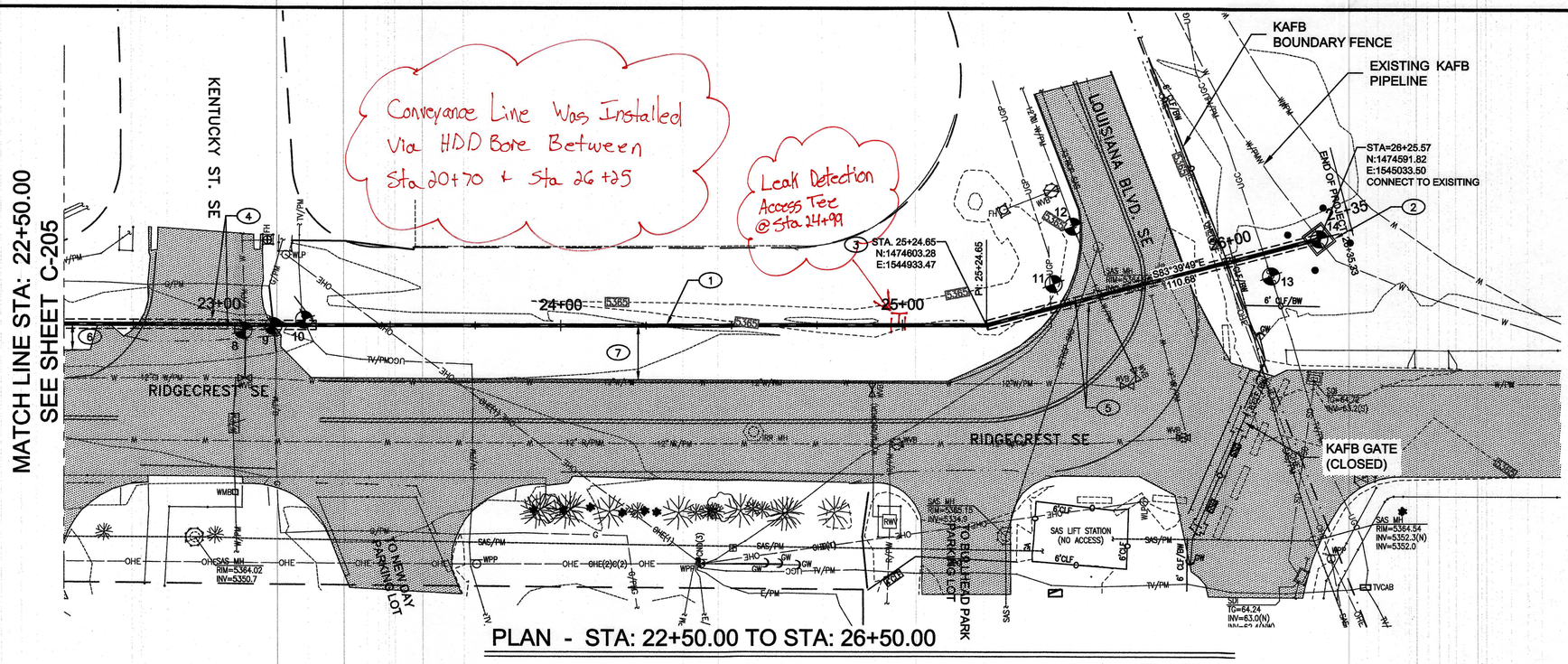

PLAN - STA: 22+50.00 TO STA: 26+50.00

SCALE: 1" = 20'

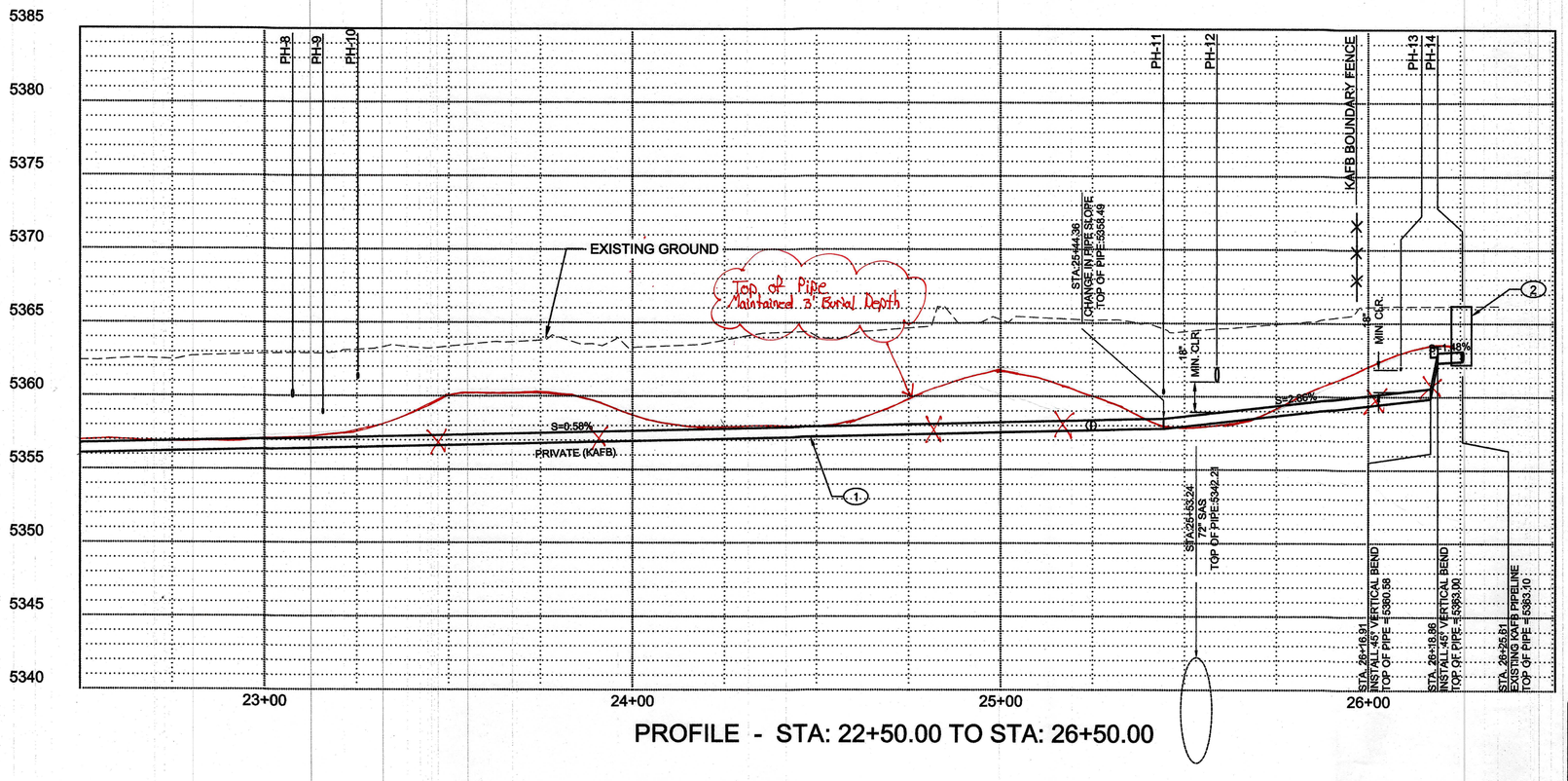

PROFILE - STA: 22+50.00 TO STA: 26+50.00

HORIZONTAL SCALE: 1" = 20'
VERTICAL SCALE: 1" = 5'

GENERAL NOTES:

1. MAINTAIN A MINIMUM OF 3 FEET OF SOIL COVER OVER INSTALLED 4"x8" DOUBLE WALL PIPE.
2. PROVIDE A MINIMUM OF 18" OF VERTICAL SEPARATION WHEN CROSSING OVER OR UNDER EXISTING UTILITIES.

KEYED NOTES:

1. NEW PRIVATE 4"x8" HDPE PIPELINE. SEE C-301, DETAIL 2 FOR TYP. TRENCH SECTION
2. NEW REINFORCED PRECAST CONCRETE JUNCTION VAULT W/ - 4 GUARD POSTS. SEE C-301 DETAIL 3.
3. 15° BEND
4. HORIZONTAL DIRECTIONAL DRILL FROM STA. 22+54.19 TO STA. 23+28.32. EXISTING ASPHALT TO REMAIN UNDISTURBED.
5. HORIZONTAL DIRECTIONAL DRILL FROM STA. 25+ 24.65 TO STA. 26+25.57. EXISTING ASPHALT TO REMAIN UNDISTURBED.
6. INSTALL PIPELINE 8' OFF EXISTING EDGE OF PAVEMENT. UNLESS OTHERWISE NOTED.
7. INSTALL PIPELINE 16' OFF EXISTING EDGE OF PAVEMENT. UNLESS OTHERWISE NOTED.

POTHOLE TABLE

NO.	DESCRIPTION	DEPTH
8	6" DIA PVC WL	29"
9	2" DIA. STEEL GAS	44"
10	2.5" CATV	21"
11	4" DIA. HDPE FIBER OPTIC	49"
12	12" DIA. DI WATER	34"
13	2 - 2" COMM.	48" & 50"
14	8" WATER	37"

DEPTH IS TO TOP OF UTILITY.

COA PROJECT NO: 586082

GEORGE NEMETH NEW MEXICO 12284 REGISTERED PROFESSIONAL ENGINEER
5-3-17

NO.	REVISION DESCRIPTION	DATE	BY
1	Name Location		
2			
3			
4			
5			

KIRTLAND AIR FORCE BASE
BULK FUELS FACILITY
KAFB - 106239 CONVEYANCE LINE

CONVEYANCE LINE INSTALLATION
STA: 22+50 TO STA: 26+50

SMITH ENGINEERING COMPANY
2201 SAN PEDRO NE BLDG 4, SUITE 200
ALBUQUERQUE, NM 87110

Design Review Committee: APPROVED MAY 19 2017 DESIGN REVIEW COMMITTEE
City Engineer Approval: APPROVED JUN 08 2017 CITY ENGINEER
Last Design Update

No. / Day / Yr.	No. / Day / Yr.

JOB NO: 116112
DATE: MAY 3, 2017
SHEET NO: C-206 / 17 OF 27

Q:\SEC-----PROJECTS\116112 KAFB Groundwater Reclam Pipeline\ENGINEERING\CADD\PLANSET\C-206-Plan and Profile.dwg May 03, 2017 - 9:41am Saved By: jamiev

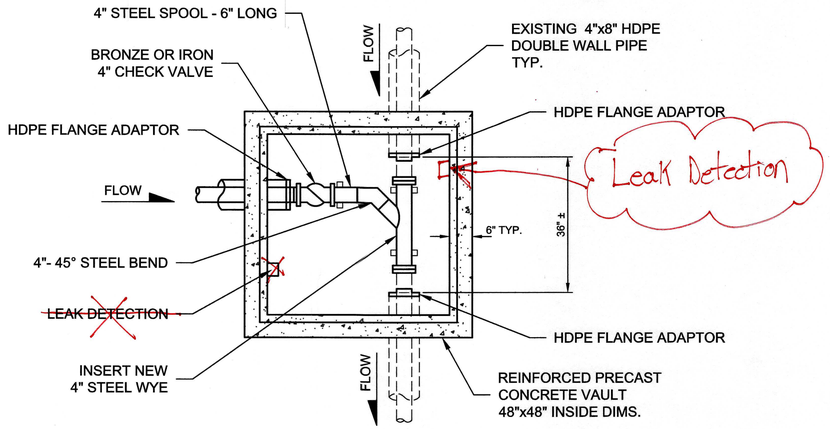

PLAN

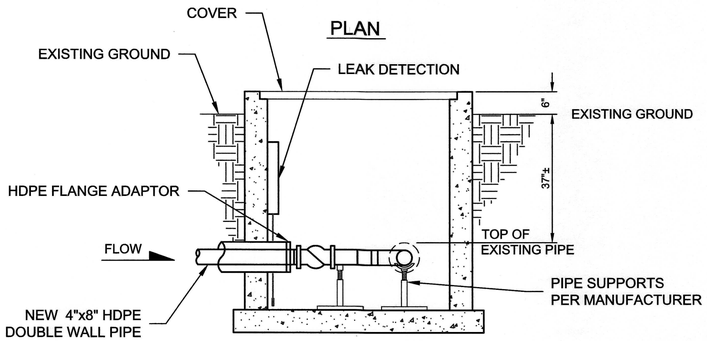

SECTION

3 JUNCTION VAULT DETAIL

C-301
C-206

SCALE: NONE

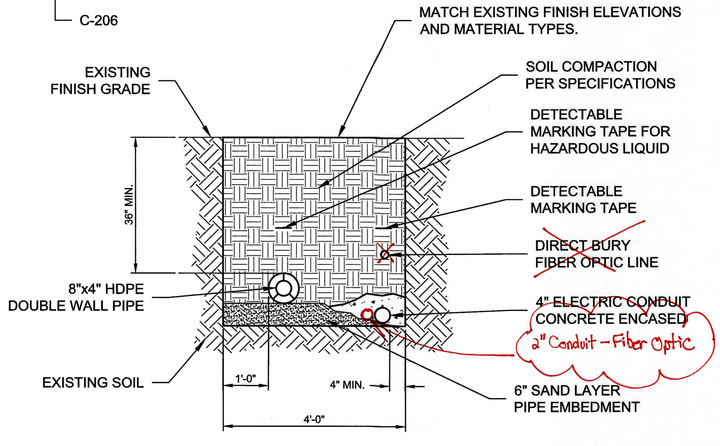

2 TRENCH SECTION

C-301
C-201, C-202, C-203, C-204, C-205, C-206

SCALE: NONE

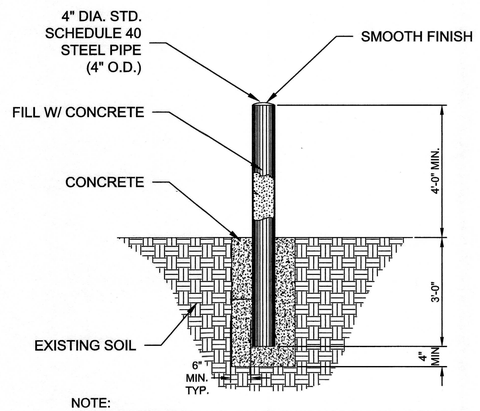

NOTE:
PRIME ENTIRE POST W/2 COATS EXTERIOR ENAMEL PRIMER.
PAINT EXPOSED SURFACE W/2 COATS TRAFFIC YELLOW ENAMEL.

4 GUARD POST DETAIL

C-301
C-201

SCALE: NONE

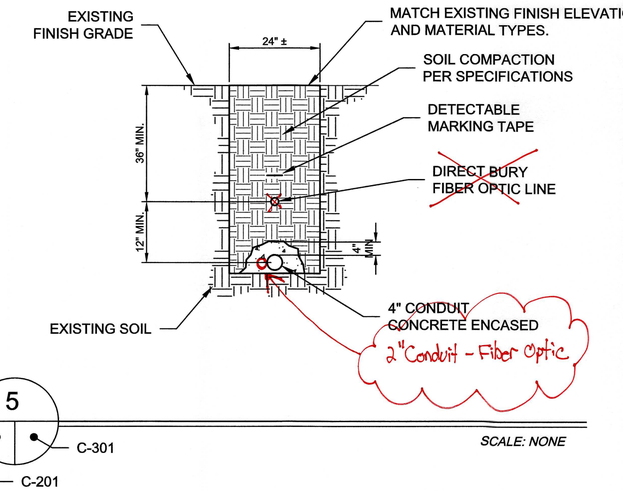

5

C-301
C-201

SCALE: NONE

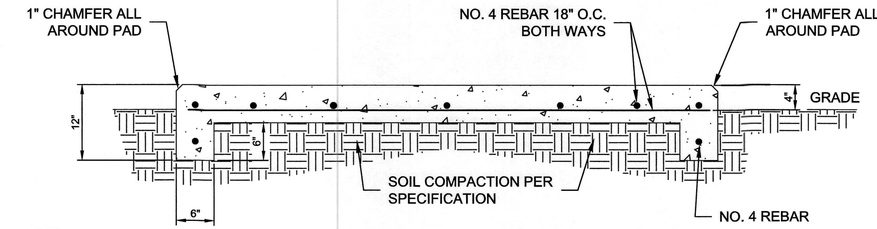

1 CONCRETE TURNDOWN DETAIL

C-301
C-401

SCALE: NONE

COA PROJECT NO: 586082

Design Review Committee: APPROVED MAY 19 2017 DESIGN REVIEW COMMITTEE
City Engineer Approval: APPROVED JUN 08 2017 CITY ENGINEER
Last Design Update

No. / Day / Yr.	No. / Day / Yr.

GEORGE NEMETH NEW MEXICO 12284 REGISTERED PROFESSIONAL ENGINEER
5-3-17

NO.	REVISION DESCRIPTION	DATE	BY
5			
4			
3			
2			
1			

Name
Location

KIRTLAND AIR FORCE BASE
BULK FUELS FACILITY
KAFB – 106239 CONVEYANCE LINE

CIVIL DETAILS

SMITH ENGINEERING COMPANY
2201 SAN PEDRO NE BLDG 4, SUITE 200
ALBUQUERQUE, NM 87110

JOB NO: 116112
DATE: MAY 3, 2017
SHEET NO: C-301 / 18 OF 27

Q:\SEC-----PROJECTS\116112 KAFB Groundwater Reclam Pipeline\ENGINEERING\CAD\PLANSET\C-301-CIVIL DETAILS.dwg May 18, 2017 - 11:36am Saved By: jerrlep

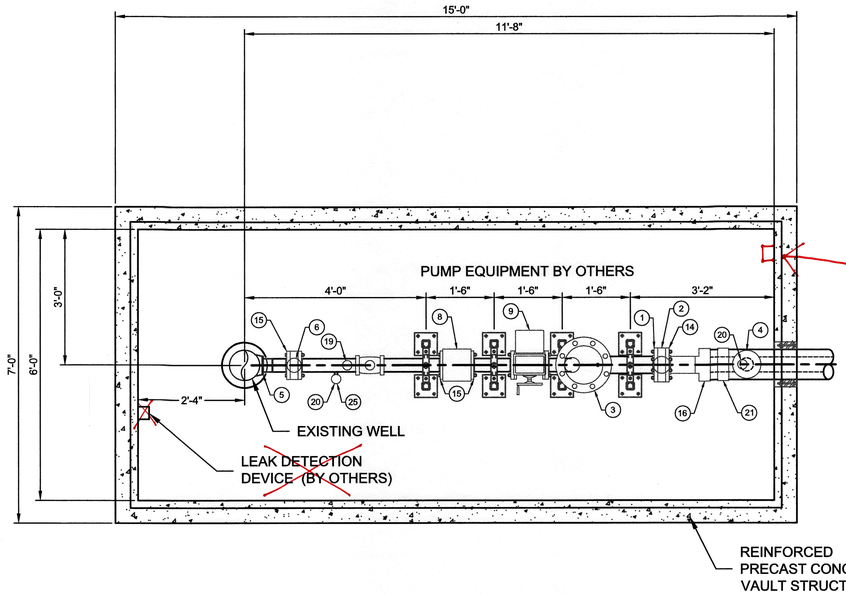

PLAN VIEW

SPECIAL NOTE:

CONCRETE VAULT WITHIN THE COA RIGHT-OF-WAY WILL REQUIRE A SEPARATE BUILDING PERMIT FROM THE CITY OF ALBUQUERQUE.

Leak Detection

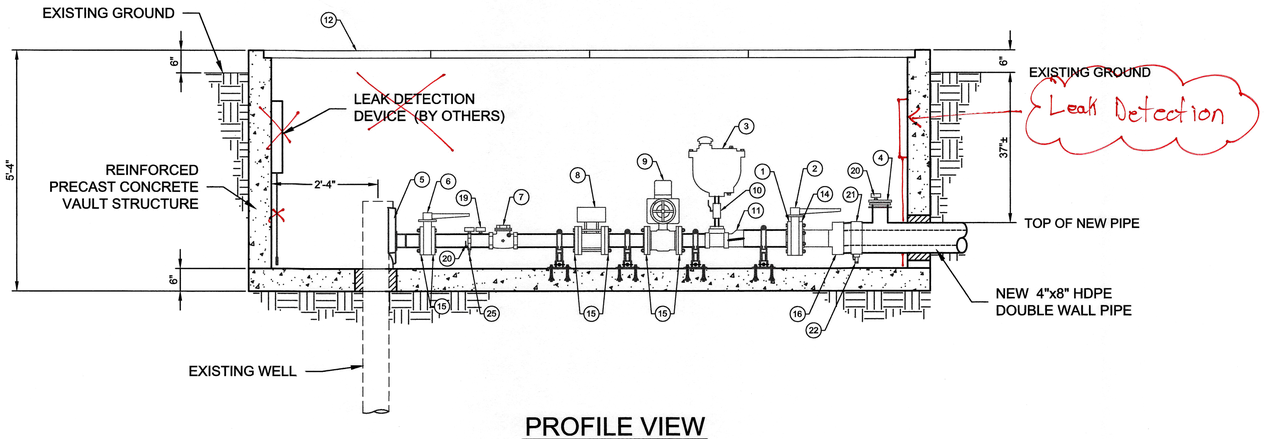

PROFILE VIEW

1 WELL VAULT DETAIL

SCALE: NONE

C-302

C-201

LIST OF MATERIAL

ITEM NO.	QUANTITY	PART DESCRIPTION
1	4	4" CARBON STEEL FLAT FACE FLANGE
2	1	4" BUTTERFLY VALVE
3	1	AIR/VACUUM RELEASE VALVE (VAL-MATIC MODEL 201C.2, OR APPROVED EQUAL)
4	2	LEAK DETECTION INSPECTION PORT
5	1	WELD ON WELL CONNECTION ADAPTOR, (MONITOR (BAKER MANUFACTURING CO.) MODEL NO. 8123BEZLF FOR 8" WELL WITH 3" FNPT DROP PIPE CONNECTION, 3" MNPT DISCHARGE OR APPROVED EQUAL)
6	1	3" BUTTERFLY VALVE
7	1	3" CHECK VALVE, THREADED
8	1	FLOW METER (SITRANS FM MAGFLOW, MAG5100W, OR APPROVED EQUAL)
9	1	3" CONTROL VALVE (TRIAC V-BALL WITH MODULATING ELECTRIC ACTUATOR, MODEL WE-2640, OR APPROVED EQUAL)
10	1	1" BALL VALVE
11	1	4"x3" CARBON STEEL ECCENTRIC REDUCER
12	–	NOT USED
13	1	WELL VAULT LID (BILCO MODEL JD-3H20, OR APPROVED EQUAL)
14	1	4" HDPE FLANGE ADAPTOR W/BACKING RING AND FULL FACE GASKET
15	6	3" CARBON STEEL FLAT FACE FLANGE
16	1	4" HDPE DUAL-WALL END TERMINATION
17	–	NOT USED
18	–	NOT USED
19	1	BIMETAL THERMOMETER, ASHCROFT MODEL 30-CI-60-R-025-0/250, OR APPROVED EQUAL
20	2	PRESSURE GUAGE, WINTERS INSTRUMENTS PFQ, STAINLESS STEEL, 1/4" BACK CONNECTION, 2-INCH DIAL SIZE, 0-100 PSI, OR APPROVED EQUAL
21	2	SADDLE, JCM 404 SERVICE SADDLE, SIZE 8" X 3/4" OR APPROVED EQUAL
22	1	3/4" BRASS BALL VALVE, FNPT X MNPT
23	–	NOT USED
24	–	NOT USED
25	1	SAMPLE PORT – BRASS BALL VALVE, 1/2" MINIMUM FNPT X MNPT, 150 PSI WORKING PRESSURE, 2-PIECE VALVE STRUCTURE, REVERSIBLE LEVER HANDLE (GRAINGER ITEM # 6GD23 OR EQUAL) WITH HOSE BARB FITTING, 1/2" MNPT, HEX HEAD, MAX PRESSURE 300 PSI (GRAINGER ITEM # 6AFN9 OR EQUAL)

NOTES:

WELL VAULT

1. STEEL SLEEVE WILL BE INSTALLED BY PRE-CAST VENDOR. PIPE PENETRATION WILL BE SEALED WITH LINKSEAL, MFR BY THUNDERLINE OR EQUAL.
2. FOR ALL EXTERIOR SURFACES, APPLY TWO COATS OF BITUMINOUS COATING FOR A TOTAL 16 MIL DRY FILM THICKNESS. COATING SHALL BE BITUGUARD, WATERPROOF LIQUID MEMBRANE, MFR FRASER BROWN + STRATMORE OR APPROVED EQUAL. APPLY IN ACCORDANCE WITH MFR RECOMMENDATION.
3. WELL SEAL TO FIT 8" DIA. WELL HEAD (I.D.) THAT COMPRESSES A RUBBER SEAL INSIDE THE WELL CASING WITH THREE PORTS. PORTS TO BE 1.25" FNPT, 0.75" FNPT, AND MAXIMUM 1.75" SMOOTH WALLED ACCESS PORT AND VENT.

COA PROJECT NO: 586082

Design Review Committee: APPROVED MAY 19 2017 DESIGN REVIEW COMMITTEE

City Engineer Approval: APPROVED JUN 08 2017 CITY ENGINEER

Last Design Update: No. / Day / Yr. | No. / Day / Yr.

GEORGE NEMETH NEW MEXICO 12284 REGISTERED PROFESSIONAL ENGINEER 5-3-17

NO.	REVISION DESCRIPTION	DATE	BY
5			
4			
3			
2			
1			

Name
Location

KIRTLAND AIR FORCE BASE
BULK FUELS FACILITY
KAFB - 106239 CONVEYANCE LINE

CIVIL DETAILS

SMITH ENGINEERING COMPANY
2201 SAN PEDRO NE BLDG 4, SUITE 200
ALBUQUERQUE, NM 87110

JOB NO: 116112
DATE: MAY 3, 2017
SHEET NO: C-302 19 OF 27

Q:\SEC-----PROJECTS\116112 KAFB Groundwater Reclam Pipeline\ENGINEERING\CADD\PLANSET\C-302-CIVIL DETAILS.dwg May 31, 2017 - 2:15pm Sowel By: jerrlep

KEYED NOTES:

1. NEW CONCRETE ELECTRICAL EQUIPMENT PAD 5'6"x18'0". SEE DETAIL 1 ON C-301.
2. 3" LAYER OF CRUSHED GRAVEL
3. NEW CHAIN LINK FENCE
4. DOUBLE SWING GATE 8' WIDE OPENING
5. EXISTING FENCE
6. EXISTING WALL
7. NEW WELL VAULT
8. NEW GUARD POST. SEE DETAIL 4 ON C-301.
9. NEW 8"X4" DOUBLE WALL HDPE PIPE.

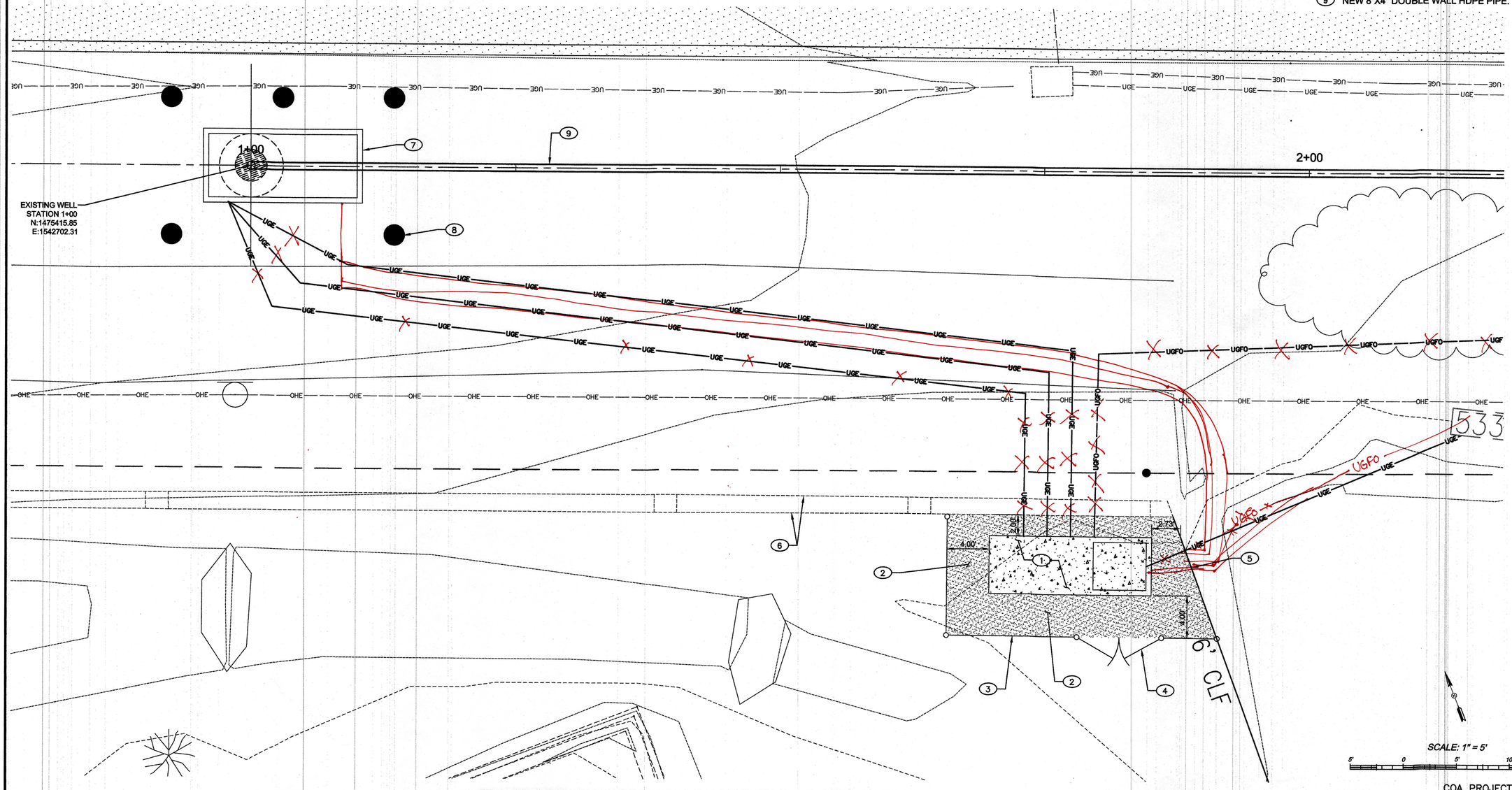

ELECTRICAL EQUIPMENT YARD ENLARGED PLAN

SCALE: 1" = 5'

SCALE: 1" = 5'

5' 0 5' 10' 15' Feet

COA PROJECT NO: 586082

GEORGE NEMETH
NEW MEXICO
12284
REGISTERED PROFESSIONAL ENGINEER
5-3-17

NO.	REVISION DESCRIPTION	DATE	BY
1			
2			
3			
4			
5			

Name
Location

KIRTLAND AIR FORCE BASE
BULK FUELS FACILITY
KAFB - 106239 CONVEYANCE LINE

ELECTRICAL EQUIPMENT YARD ENLARGED PLAN

SMITH ENGINEERING COMPANY
2201 SAN PEDRO NE BLDG 4, SUITE 200
ALBUQUERQUE, NM 87110

Design Review Committee: APPROVED MAY 19 2017 DESIGN REVIEW COMMITTEE

City Engineer Approval: APPROVED JUN 08 2017 CITY ENGINEER

Last Design Update

No. / Day / Yr.	No. / Day / Yr.

JOB NO: 116112
DATE: MAY 3, 2017
SHEET NO: C-401 / 20 OF 27

Q:\SEC-----PROJECTS\116112 KAFB Groundwater Reclaim Pipeline\ENGINEERING\CADD\PLANSET\C-401 ELECTRICAL EQUIPMENT YARD ENLARGED PLAN.dwg May 03, 2017 - 9:46am Saved By: jamiev

NAMEPLATE REQUIREMENTS

ELECTRICAL PANELS

PANEL L1
208/120V, 3PH, 4W
225A, FED FROM H1
VIA XFMR T-L1

EQUIPMENT CONTROLS

CWP-VFD
208/120V, 3PH, 4W
5HP, FED FROM L1

RECEPTACLES

PNL - CKT #

J-BOXES

PWR	IT	FIRE
L1-1 120V	COM	FA NAC
NO PAINT	ORANGE COVER	RED COVER

SPECIFICATIONS
1. NAMEPLATE: 1/16" PHENOLIC PLASTIC LAMINATE, TWO FLAT HEAD SCREWS
2. FINISHED AREA WIRING DEVICES: ADHESIVE LABELS, WHITE W/ BLACK TEXT
3. J-BOXES: USE PERMANENT INK MARKER AND PAINT AS NOTED
4. OUTDOOR AND HARSH ENVIRO WIRING DEVICES: MARKER ON INSIDE OF COVER
5. IN PUBLIC AREAS SUCH AS LOBBIES, CONF. ROOMS, ETC, LABEL INSIDE OF RECEPTACLE COVERS AND EXPOSED JBOX COVERS USING MARKER. PLACE A DOT OF PAINT ON OUTSIDE OF SPECIAL SYSTEMS BOXES.

SYMBOL NOTATIONS USED

a S_2 — SWITCHLEG TO LIGHTS (OMITTED WHERE THE LTG SERVED IS OBVIOUS)

SPECIFICATION NOTES:
- 2 = DOUBLE POLE
- 3 = THREE WAY
- 4 = FOUR WAY
- D = DIMMER
- EP = EXPLOSION PROOF
- H = HORSEPOWER RATED
- K = KEY OPERATED
- LV = LOW VOLTAGE
- M = MANUAL MOTOR STARTER
- P = PILOT LIGHT
- T = TIMER

SWITCHING INSTRUCTIONS:
LOWER CASE LETTER DESIGNATES A SWITCHLEG, LETTER WILL BE SHOWN NEXT TO EACH FIXTURE CONTROLLED BY SWITCH

AC GFI L1-1 — PANEL NAME & CIRCUIT NUMBER

SPECIFICATION NOTES:
- GFI = INTEGRAL GROUND FAULT TRIP MODULE
- IG = ISOLATED GROUND
- MG = MARINE GRADE
- TL = TWIST-LOCK
- WP = WEATHER RESISTANT RECEPTACLE WITH METAL WEATHERPROOF WHILE IN USE COVER

MOUNTING REQUIREMENTS:
- 48" = MOUNT AT 48 INCHES ABOVE FINISHED FLOOR
- AC = MOUNT ABOVE COUNTER 4" ABOVE BACK-SPLASH
- C = CEILING MOUNT

A a L1-1 E/NL
- LUMINAIRE TAG, REFER TO SCHEDULE
- LOWER CASE LETTER INDICATES SWITCHLEG (WHERE APPLICABLE)
- PANEL NAME & CIRCUIT NUMBER
- E INDICATES BACK UP POWERED
- NL INDICATES NIGHT LIGHT

SITE ELECTRICAL

SITE WIRING
- CIRCUIT WIRING
- UNDERGROUND CIRCUIT WIRING
- EXISTING UNDERGROUND
- MULT-CONDUIT UNDERGROUND (CONCRETE ENCASED WHERE NOTED)
- UGE — UNDERGROUND HV/MV UTILITY LINE
- OHE — OVERHEAD HV/MV UTILITY LINE
- UGFO — UNDERGROUND FIBER OPTIC
- STUB UP / TURN DOWN

EXTERIOR IN GRADE EQUIPMENT
- PB — IN GRADE 600V PULL BOX
- CP — IN GRADE COMMUNICATIONS PULL BOX
- EM — ELECTRICAL MANHOLE
- CM — COMMUNICATIONS MANHOLE
- MV PB — UNDERGROUND MV PULL BOX

EXTERIOR ABOVE GRADE EQUIPMENT
- TRANSFORMER PAD
- T — POLE MOUNTED TRANSFORMER
- UTILITY POLE
- EQUIPMENT MOUNTING RACK
- MV SW — MV PAD MOUNT SWITCH
- C — COMMUNICATIONS SERVICE ENCLOSURE

SPECIFICATIONS
1. ELECTRICAL BURIAL DEPTH:
   1.1. 24" AT VEHICLE ACCESSED AREAS.
   1.2. 18" AT AREAS INACCESSIBLE TO VEHICLES.
2. COMMUNICATIONS BURIAL DEPTH: 18"
3. PROVIDE 12" SEPARATION FROM UTILITIES.
4. ALL SITE UNDERGROUND RACEWAYS SHALL BE BEDDED IN SAND OR SELECT FILL, LARGE ROCKS SHALL BE REMOVED FROM BACKFILL, UNLESS NOTED TO BE CONCRETE ENCASED.
5. MANHOLES SHALL BE CONCRETE, RE-ENFORCED AS REQUIRED, GROUTED AND SEALED, EARTH GROUNDED. LIDS: ENGRAVED, BOLT DOWN COVERS, CONCRETE OR CAST IRON (SEE DETAILS)
6. PULL BOXES FOR 600V BRANCH CIRCUITS AND COMMUNICATIONS SHALL BE 24"L x 12"W x 18"D, POLYMER CONCRETE, UNO (SEE DETAILS)
7. EQUIPMENT PADS SHALL BE 10" THICK, 3000 PSI CONCRETE, WITH #3 REBAR GRID AT 9" ON CENTER, UNO (SEE DETAILS).
8. ENCLOSURES SHALL BE OUTDOOR RATED
9. EQUIPMENT MOUNTING RACKS SHALL BE GALVANIZED STEEL TUBE AND GALVANIZED SLOTTED U-CHANNEL, CONCRETE EMBEDDED OR SET ON PADS (SEE DETAILS)

SPECIAL SYSTEMS

GENERAL SPECIAL SYSTEMS INSTALLATION REQUIREMENTS
1. PROVIDE 4" SQUARE DEEP J-BOX FOR ALL DATA OUTLETS, FIRE ALARM COMPONENTS, SECURITY, A/V AND OTHER SPECIAL SYSTEMS EQUIPMENT AND DEVICES, UNO.
2. THE GENERAL, ELECTRICAL, AND SPECIAL SYSTEMS CONTRACTORS SHALL COORDINATE SCOPE BEFORE BID AND ALL DEVICE AND EQUIPMENT LOCATIONS BEFORE ROUGH IN.
3. PROVIDE SINGLE GANG REDUCER FOR FLUSH MOUNT DEVICES THAT HAVE SINGLE GANG COVER PLATES.
4. PROVIDE RACEWAY SYSTEM FROM ALL SPECIAL SYSTEMS EQUIPMENT, DEVICES, ETC TO THEIR RESPECTIVE SOURCE EQUIPMENT, RACK, ETC.
5. WHERE SPECIAL SYSTEMS CABLING IS PERMITTED TO BE ROUTED IN AIR THROUGH ACCESSIBLE ABOVE CEILING SPACE, USE J-HOOKS AND CABLE TIES TO GROUP, SECURE AND NEATLY ROUTE CABLE TO SOURCE. ROUTE PARALLEL/PERPENDICULAR TO STRUCTURAL ELEMENTS. PROVIDE SLEEVES THROUGH INACCESSIBLE SECTIONS OF HOME-RUNS.

TELECOM OUTLETS & DEVICES
- DATA OUTLET
- COMINATION DATA AND VOICE OUTLET
- VOICE OUTLET
- FLOOR MOUNTED DATA OUTLET
- AVB — AUDIO VIDEO INPUT JACK BOX
- WAP — WIRELESS ACCESS POINT
- TV — A/V OUTLET BOX
- TV — TV/CATV OUTLET

FIRE ALARM AND (VOICE/ MASS) NOTIFICATION DEVICES
- HORN
- COMBINATION HORN/STROBE
- COMBINATION SPEAKER/STROBE
- S WP — SPEAKER, WALL MOUNT, WEATHERPROOF
- cd — VISUAL ONLY, CEILING MOUNTED, CLEAR LENS, cd=CANDELA RATING/SETTING
- cd — VISUAL ONLY, WALL MOUNTED, CLEAR LENS, cd=CANDELA RATING/SETTING
- M cd — MNS, CEILING MOUNTED, AMBER LENS, cd=CANDELA RATING/SETTING
- M cd — MNS, WALL MOUNTED, AMBER LENS, cd=CANDELA RATING/SETTING
- W cd C — COMBINATION SPEAKER/VISUALS, CEILING MOUNTED, AMBER AND CLEAR LENS, cd=CANDELA RATING/SETTING, W=WATTAGE
- W cd — COMBINATION SPEAKER/VISUALS, WALL MOUNTED, AMBER AND CLEAR LENS, cd=CANDELA RATING/SETTING, W=WATTAGE
- W cd WP — COMBINATION SPEAKER/VISUALS, WALL MOUNTED, WEATHERPROOF, AMBER AND CLEAR LENS, cd=CANDELA RATING/SETTING, W=WATTAGE

FIRE DETECTION DEVICES
- F — MANUAL PULL STATION
- S — AREA SMOKE DETECTOR
- S SB — AREA SMOKE DETECTOR WITH SOUNDER BASE
- CARBON MONOXIDE DETECTOR
- AREA HEAT DETECTOR
- S — DUCT MOUNTED SMOKE DETECTOR
- H — HOOD FIRE SUPPRESSION SYSTEM RELAY
- VS — VALVE SUPERVISORY SWITCH
- WF — WATER FLOW SWITCH

FIRE ALARM SYSTEM CONTROLS
- FACP — FIRE DETECTION & ALARM CONTROL PNL
- MNS — MASS NOTIFICATION SYSTEM
- NAC — NOTIFICATION CIRCUIT EXPANSION PNL
- FAA — FACP REMOTE ANNUNCIATOR PANEL
- LOC — LOCAL OPERATOR CONSOLE
- HFS — KITCHEN HOOD FIRE SUPPRESSION PNL
- AOM — ADDRESSABLE OUTPUT CONTROL MODULE
- MOTORIZED SMOKE FIRE DAMPER
- LT — LOW TEMPERATURE SWITCH
- MM — MONITOR MODULE

ACCESS CONTROL & INTRUSTION DETECTION SYSTEMS
- CR — CARD READER FOR CAC SMART CARD
- KP — KEY PAD
- P1 — CONCEALED DOOR POSITION SWITCH
- P2 — OVERHEAD DOOR POSITION SWITCH
- REX — REQUEST TO EXIT
- E1 — ELECTRIFIED EXIT PUSH BAR
- DP — DOOR OPEN PUSHBUTTON
- J CCTV — CCTV CAMERA, INFRASTRUCTURE ONLY

FA SPECIFICATION AND INSTALL REQUIREMENTS
1. REQUIREMENTS SHOWN HERE ARE MINIMUM BASIC REQUIREMENTS, ADDITIONAL REQUIREMENTS ELSEWHERE.
2. FA DEVICES SHALL BE ADDRESSABLE.
3. STROBES: XENON TYPE, BUILDING WIDE FLASH SYNCHRONIZED, WITH FIELD ADJUSTABLE INTENSITY.
4. HORN INTENSITY SHALL BE 15DB ABOVE AMBIENT.
5. PULL STATIONS: SINGLE ACTION, ADA COMPLIANT
6. SMOKE DETECTORS: ADJUSTABLE SENSITIVITY, STATUS LEDs
7. HEAT DETECTORS: RATE OF RISE, FIXED TEMP, SPECIFY 190 AS REQUIRED, WITH STATUS LEDs
8. DUCT DETECTORS: FULL DUCT WIDTH SAMPLING TUBE, RELAY CONTACT, LOCATE 3FT FROM FAN, BEFORE BRANCHES, LED STATUS INDICATORS, FA MODULE.
9. FACP: MODULAR, ADDRESSABLE, AUTOMATIC FA SYSTEM, REMOTE MONITORING, BATTERY BACKUP SUFFICIENT FOR 24 HOURS OF MONITORING PLUS 5 MIN. OF ALARM,
10. MONITOR AND CONTROL MODULES:ADDRESSABLE, MOUNTED IN 4" DEEP J-BOXES WITH A CUSTOM COVER PLATE WITH APPROPRIATE LABELING AND VIEW PORTS FOR ANY LED INDICATORS.
11. PROVIDE CONDUIT BETWEEN DUCT DETECTORS, FSDs, FLOW SWITCHES, ETC AND MONITOR AND CONTROL MODULES, FMC MAY BE USED FOR SHORT RUNS TO EQUIPMENT OR PIPING, 3FT MAX.
12. PROVIDE 120V POWER AND CPT (WHERE REQUIRED) TO ALL MOTORIZED DAMPERS AND OTHER ANCILLARY EQUIPMENT NOT POWERED FROM THE FIRE ALARM PANEL

LIGHTING

LIGHTING SYMBOLOGY GENERAL NOTES
1. USING THE LUMINAIRE TAG FOR REFERENCE, REFER TO THE LUMINAIRE (FIXTURE) SCHEDULE FOR THE DESCRIPTION OF EACH FIXTURE TYPE.

A a — LUMINAIRE TAG, REFER TO SCHEDULE; LOWER CASE LETTER INDICATES SWITCHLEG (WHERE APPLICABLE)

EXIT LIGHTING
- EXIT SIGN - SINGLE FACE
- EXIT SIGN - DUAL FACE

SPECIFICATIONS
1. EDGE LIT, LED EXIT SIGNS.
2. INTEGRAL 90 MIN BATTERY PACK
3. SELF DIAGNOSTIC
4. INTEGRAL TEST SWITCH

- DUAL HEAD EMERGENCY LIGHT WITH INTEGRAL BATTERY PACK
- E/NL — EMERGENCY/EGRESS LIGTHING SHOWN HATCHED AND/OR TAGGED WITH "E" (AS IN "AE") UNSWITCHED WHERE NOTED NL

1. EMERGENCY/EGRESS LIGHTING SHALL USE SELF CONTAINED BATTERY PACKS, UNO.
2. INTEGRAL 90 MIN BATTERY PACK
3. SELF DIAGNOSTIC
4. INTEGRAL TEST SWITCH

GENERAL SPECIAL SYSTEMS INSTALLATION REQUIREMENTS
1. ROUTE UNSWITCHED CIRCUIT LET TO ALL EMERGENCY/EGRESS LIGHTING AND EXIT SIGNS FOR BATTERY CHARGING AND TRANSFER CONTROL.
2. EMERGENCY LIGHTING TO BE SWITCHED WITH ADJACENT AREA LIGHTING, UNLESS NOTED "NL" FOR NIGHT LIGHT.

LIGHTING CONTROLS

WALL SWITCHES
- $ — SINGLE POLE, SINGLE THROW SWITCH
- $2 — TWO POLE, SINGLE THROW
- $3 — SINGLE POLE, DOUBLE THROW 3-WAY
- $4 — TWO POLE, DOUBLE THROW 4-WAY
- D — SLIDE DIMMER, COMMERCIAL GRADE
- $TS — TIME SWITCH, 60 MIN. OVERRIDE U.N.O.

SPECIFICATIONS
1. 20A, 120V/277V RATED
2. SCREW TYPE TERMINALS, W/ GND TERM.
3. NYLON COVER PLATE
4. FINISHED AREAS: COMMERCIAL GRADE, ROCKER TYPE SWITCH
5. UNFINISHED AREAS: HEAVY DUTY TOGGLE SWITCH
6. DEVICE AND COVER PLATE COLOR PER ARCHITECT

OCCUPANCY SENSORS
- OS — WALL MOUNTED W/ PUSHBUTTON
- OS — AIMABLE WALL MOUNTED
- OS — 360° CEILING MOUNTED, CNTR IN RM
- DS — DAYLIGHT SENSOR
- DS — DOOR FRAME SWITCH

SPECIFICATIONS
1. COMBINATION INFRARED AND ULTRASONIC
2. ADJUSTABLE OFF DELAY, SET AT 15 MIN.
3. DAYLIGHT SENSING, ADJUSTABLE SENSITIVITY
4. WALL MNT: PUSH ON, AUTO OFF "VACANCY TYPE"
5. CLNG MNT: 360°, 1,000 SQ FT COVERAGE
6. AIMABLE WALL MNT SHALL BE ON ADJUSTABLE MOUNTING ASSEMBLY AT 18" BELOW CEILING AIMED AWAY FROM TRAFFIC PASSING THE SPACE.

AUTOMATED CONTROLS
- LC — LIGHTING CONTACTOR
- PC — PHOTOCELL
- TC — TIMECLOCK
- LCP — LIGHTING CONTROL PANEL
- LCS — LIGHTING CONTROL STATION
- WDP — WALL MOUNTED DIMMER PANEL

SPECIFICATIONS
1. SCREW CLAMP, CONCEALED TERMINALS
2. TIME CLOCKS: 24 HR, 7 DAY, ASTRONOMICAL & HOLIDAY PROGRAMMING, BATTERY BACK UP.
3. LCP: PROGRAMMABLE, MULTI-CIRCUIT DIMMER PANEL WITH SINGLE INPUT AND MULTIPLE 20A OUTPUT CIRCUITS WITH INDIVIDUAL OCPDs; AND DIMMER MODULES OR ON/OFF CONTACTS AS REQUIRED.
4. LCS: WALL MOUNTED CONTROL STATION WITH ON/OFF, SCENE SELECTION, & LV CABLE TO CENTRAL LCP OR ADDRESSABLE POWER PACKS. LCS SHALL BE ABLE TO COMMUNICATE DISCRETE COMMANDS TO MULTIPLE POWER PACKS OR "SWITCHLEGS" TO SET THEM AT DIFFERENT DIMMING LEVELS
5. WDP: WALL MNT LOCAL DIMMER PANEL WITH SINGLE 20A INPUT AND 4 OR MORE DIMMABLE OUTPUTS, AND MULTIPLE PROGRAMMED SETTING OPTIONS.
6. PROVIDE START UP AND PROGRAMMING FOR ALL LIGHTING CONTROL SYSTEMS AND DEVICES.

ELECTRICAL ONE LINE

ONE LINE
- MOLDED/INSULATED CASE BREAKER
- DRAWOUT CIRCUIT BREAKER, AIR TYPE
- DRAWOUT CIRCUIT BREAKER, VAC TYPE
- THERMAL OVERLOAD
- FUSED DISCONNECT SWITCH
- FUSE, HOLDER & PULLER
- POTENTIAL TRANSFORMER
- CURRENT TRANSFORMER
- CT ENCLOSURE
- M — UTILITY METER
- TVSS — SURGE PROTECTION DEVICE
- GEN — GENERATOR REMOTE ANNUNCIATION PNL
- X — MOTOR, "X" INDICATING HORSE POWER
- AUTOMATIC TRANSFER SWITCH
- ST — SHUNT TRIP (K=KIRK KEY INTERLOCK, RT=REMOT TRIP)
- K — KIRK-KEY

SPECIFICATIONS
1. CIRCUIT BREAKERS SHALL BE BOLT ON TYPE, WITH OVERLOAD AND INSTANTANEOUS TRIP COMPONENTS.
2. DISTRIBUTION BREAKERS SHALL HAVE DIGITAL TRIP UNITS WITH ADJUSTABLE LSIG TRIP SETTINGS.
3. CONTROL POWER TRANSFORMERS SHALL BE ENCLOSED/ENCAPSUALTED, MIN .5% ACCURACY
4. CURRENT TRANSFORMERS SHALL BE TORROIDAL OR RECTANGLE WINDOW, SINGLE RATIO, W/ POLARITY MARKS.
5. PROVIDE UTILITY METER HOUSING PER UTILITY SPECIFICATIONS FOR SERVICES UP TO 225A
6. PROVIDE CT ENCLOSURE FOR SERVICES OVER 225A. PROVIDE MIN 36"W x 36"H X 16"D UTILITY PROVIDER APPROVED ENCLOSURE. NOTE THAT LARGER SIZE MAY B REQUIRED FOR SERVICES OVER 800As.
7. ATSs SHALL BE 4 POLE, NEUTRAL SWITCHING TYPE, UNO.

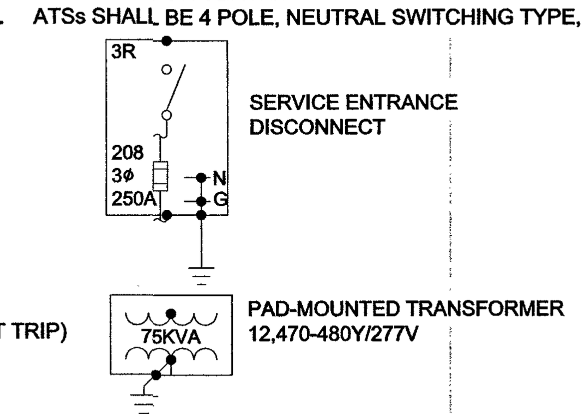

ABBREVIATIONS

A.	AMPERE	LOTO	LOCK OUT TAG OUT
AC	ABOVE COUNTER	LTG	LIGHT OR LIGHTING
AFF	ABOVE FINISHED FLOOR	MCB	MAIN CIRCUIT BREAKER
AIC	AMP INTERRUPTING CAPACITY	MCC	MOTOR CONTROL CENTER
A/V	AUDIO VISUAL	MCP	MOTOR CIRCUIT PROTECTOR
ATS	AUTOMATIC TRANSFER SWITCH	MIN	MINIMUM
BLDG	BUILDING	MH	METAL HALIDE
C	CONDUIT	MLO	MAIN LUGS ONLY
CKT	CIRCUIT	MNS	MASS NOTIFICATION SYSTEM
CM	CONTROL MODULE	MRS	MOTOR RATED SWITCH
COA	CITY OF ALBUQUERQUE	MSB	MAIN SWITCH BOARD
CONN	CONNECTOR OR CONNECTION	MTD	MOUNTED
CT	CURRENT TRANSFORMER	MTS	MANUAL TRANSFER SWITCH
DIM	DIMENSION	MV	MEDIUM VOLTAGE
EA	EACH	N.I.C.	NOT IN CONTRACT
EC	ELECTRICAL CONTRACTOR	NL	NIGHT LIGHT (UNSWITCHED)
EF	EXHAUST FAN	NTS	NOT TO SCALE
ELEC	ELECTRIC,ELECTRICAL	Ø	PHASE
EMER	EMERGENCY	OL	OVERLOAD
EPO	EMERGENCY POWER OFF	OE	OVER HEAD ELECTRIC
EWC	ELECTRIC WATER COOLER	PS	PULL STRING
FA	FIRE ALARM	RECPT	RECEPTACLE
FACP	FIRE ALARM CONTROL PANEL	RGS	RIGID GALVANIZED STEEL
FLA	FULL LOAD AMPS	SPD	SURGE PROTECTION DEVICE
FS	FLOW SWITCH	TS	TAMPER SWITCH
FSD	FIRE SMOKE DAMPER	TYP.	TYPICAL
GC	GENERAL CONTRACTOR	TVSS	TRANSIENT VOLTAGE
GFI	GROUND FAULT INTERRUPTER		SURGE SUPPRESSION
GND	GROUND	UG	UNDERGROUND
HOA	HAND-OFF-AUTO	UNO	UNLESS NOTED OTHERWISE
HP	HORSEPOWER	V	VOLTAGE
HPS	HIGH PRESSURE SODIUM	WH	WATER HEATER
HTR	HEATER	WP	WEATHER PROOF
J-BOX	JUNCTION BOX	WR	WEATHER RATED
KCM	THOUSAND CIRCULAR MILLS	XFMR	TRANSFORMER

RECEPTACLES

RECEPTACLES
- SIMPLEX RECEPTACLE
- DUPLEX RECEPTACLE
- QUADRAPLEX RECEPTACLE
- FLOOR MOUNTED RECEPTACLE
- CEILING MOUNTED RECEPTACLE
- SPECIAL PURPOSE RECEPTACLE
- SWITCHED RECEPTACLE

SPECIFICATIONS
1. 20A, 120V RATED, SCREW TYPE TERMINALS, W/ GND TERM.
2. NYLON COVER PLATE
3. FINISHED AREAS: COMMERCIAL GRADE
4. LABS, HALLS, MECHANICAL ROOMS, ETC: HEAVY DUTY
5. PATIENT CARE AREAS: HOSPITAL GRADE.
6. DAMP LOCATIONS: GFCI TYPE
7. WET LOCATIONS: GFCI TYPE, METAL WEATHERPROOF WHILE IN USE COVER.
8. OCC. SENSOR CONTROLLED: PROVIDE WITH SYMBOL:
9. DEVICE AND COVER PLATE COLOR PER ARCHITECT

ELECTRICAL EQUIPMENT

DISTRIBUTION EQUIPMENT
- ELECTRICAL BRANCH PANEL
- T — TRANSFORMER
- J — JUNCTION BOX
- FB1 — FLOORBOX
- SURFACE RACEWAY
- EQUIP MOUNTED ON CHANNEL RACK

SPECIFICATIONS
1. PANELS: COPPER PH, N, G BUSSING, HINGED DOOR, REMOVABLE FRONT COVE
2. TRANSFORMERS: COPPER, 2 WINDING, 3-PHASE DELTA TO WYE ON CONCRETE PAD WITH ISOLATORS, UNLESS NOTED TO BE SUSPENDED.
3. ALL FLOOR-BOXES SHALL BE PROVIDED WITH RECEPTACLES, AND WHERE APPLICABLE, DATA MOUNTING PLATES.
4. ALL TRANSFORMERS SHALL MEET U.S. DEPARTMENT OF ENERGY 2016 MANDATED MINIMUM EFFICIENCY.

EQUIPMENT CONTROLLERS

DISCONNECTS AND OCPD
- CB — ENCLOSED CIRCUIT BREAKER
- DISCONNECT SWITCH
- $H — HORSE POWER RATED TOGGLE SWITCH
- $M — MANUAL MOTOR STARTER W/ OVERLOADS
- $U — DISCONNECT MOUNTED ON UNISTRUT

SPECIFICATIONS
1. HEAVY DUTY
2. ALL ENCLOSED CBs, SWITCHES, AND DISCONNECTS SHALL HAVE INTEGRAL LOCK OUT DEVICES.
3. ENCLOSED CIRCUIT BREAKERS: OVERLOAD AND INSTANTANEOUS TRIP COMPONENTS, LOCK OUT PROVISIONS, AND INTEGRAL SHUNT TRIP MODULES
4. DISCONNECTS: QUICK-MAKE/BREAK LOAD INTERRUPTER KNIFE SWITCH, HINGED METAL ENCLOSURE, EXTERNAL OPERABLE HANDLE, LOCKABLE ON OR OFF.

MOTOR AND EQUIPMENT CONTROLS
- MAGNETIC STARTER - FVNR U.N.O.
- COMBINATION STARTER & DISCONNECT
- MAGNETIC CONTACTOR (LTG CONTACTOR)
- VFD — VARIABLE FREQUENCY DRIVE
- EPO — EMERGENCY POWER OFF PUSHBUTTON
- HOA — "HAND-OFF-AUTO" CONTROL SELECTOR

SPECIFICATIONS
1. STARTERS: N.O. & N.C. AUXILLARY CONTACTS, FUSED CPT, ADJUSTABLE OVERLOAD, SIZED PER MOTOR HP, REMOTE START INPUT, HOA SWITCH
2. LIGHTING CONTACTORS: 20A MIN PER POLE, 120/277V RATED, HOA SWITCH, HINGED METAL ENCLOSURE, SCREW TERMINALS, QTY OF POLES AS NOTED.
3. PROVIDE INTEGRAL DISCONNECT FOR STARTERS, VFDs, ETC, LOCKABLE ON OR OFF.
4. EMERGENCY POWER OFF PUSHBUTTON SHALL BE A RED MUSHROOM HEAD, LATCHING CONTACT, ENGRAVED.

COA PROJECT NO: 586082

MICHAEL LOUIS LLOYD
NEW MEXICO
22680
PROFESSIONAL ENGINEER
5/31/2017

NO.	REVISION DESCRIPTION	DATE	BY
1			
2			
3			
4			
5			

KIRTLAND AIR FORCE BASE BULK FUELS FACILITY
KAFB-106239 CONVEYANCE LINE
SYMBOLS & LEGENDS

SMITH ENGINEERING COMPANY
2201 SAN PEDRO NE BLDG 4, SUITE 200
ALBUQUERQUE, NM 87110
EEA CONSULTING ENGINEERS

JOB NO: 116112
DATE: MAY 3, 2017
SHEET: E-000 NO: 21 of 27

ELECTRICAL GENERAL CONDITIONS

CODE REQUIREMENTS

1. THE CONTRACTOR SHALL COMPLY WITH ALL APPLICABLE REQUIREMENTS OF LAWS, RULES, REGULATIONS, CODES STANDARDS, AND ORDINANCES OF FEDERAL, STATE, AND LOCAL AUTHORITIES HAVING JURISDICTION, AND ALL EQUIPMENT AND MATERIALS SHALL COMPLY WITH SAID AUTHORITIES WHETHER INDICATED ON THE CONTRACT DOCUMENTS OR NOT.
2. ALL WORK SHALL BE PERFORMED PER:
   2.1. 2014 NATIONAL ELECTRICAL CODE – NEC
   2.2. NATIONAL FIRE PROTECTION ASSOCIATION – NFPA
3. THE PUBLICATIONS AND STANDARDS OF THE FOLLOWING AUTHORITIES, IN ADDITION TO THOSE SPECIFIED IN RELATED SUPPLEMENTARY CONDITIONS, SHALL BE OBSERVED DURING CONSTRUCTION AND ARE REFERENCED IN THE DOCUMENTATION BY THE ABBREVIATIONS NOTED:
   3.1. UNITED STATES OF AMERICA STANDARDS INSTITUTE – USASI
   3.2. INSTITUTE OF ELECTRICAL AND ELECTRONIC ENGINEERS – IEEE
   3.3. NATIONAL ELECTRICAL CODE – NEC
   3.4. NATIONAL FIRE PROTECTION ASSOCIATION – NFPA
   3.5. UNDERWRITER'S LABORATORY – UL
   3.6. NATIONAL ELECTRICAL MANUFACTURERS ASSOCIATION – NEMA
   3.7. CERTIFIED BALLAST MANUFACTURERS – CBM
   3.8. AMERICAN SOCIETY FOR TESTING AND MATERIALS – ASTM
   3.9. OCCUPATIONAL SAFETY AND HEALTH ACT – OSHA
4. EQUIPMENT AND DEVICES SHALL BE MOUNTED PER ADA AND TAS REQUIREMENTS, UNO.
   4.1. OPERABLE DEVICES (SWITCHES, CARD READERS, ETC) AT OR BELOW 48" AFF
   4.2. RECEPTACLES, TELEPHONE AND DATA OUTLETS AT 18" AFF (15" MIN TO BOTTOM OF DEVICE), UNO

SCOPE OF WORK

1. THE SCOPE OF WORK SHALL INCLUDE COMPLETE PROVISIONS FOR ELECTRICAL POWER DISTRIBUTION TO ALL LIGHTING, DEVICES, APPLIANCES, AND EQUIPMENT SHOWN ON THE CONSTRUCTION DOCUMENTS.
   1.1. PROVISIONS INCLUDE, BUT ARE NOT LIMITED TO, ALL SUPPLIES, MATERIALS, EQUIPMENT, TOOLS AND LABOR.
   1.2. PROVISIONS ALSO INCLUDE ALL MISCELLANEOUS MATERIALS REQUIRED TO COMPLETE THE WORK SHOWN INCLUDING, BUT NOT LIMITED TO, SUPPORTS, HANGERS, RACEWAYS, BOXES, SLEEVES, SEALS, EQUIPMENT PADS, WIRING CONNECTORS, TERMINALS, LABELS, SIGNS, AND MARKERS.
   1.3. THE CONSTRUCTION DOCUMENTS INCLUDE ALL PLANS, ELEVATIONS, DETAILS, DIAGRAMS, SCHEDULES, AND NOTES ON THE DRAWINGS AND THE WRITTEN SPECIFICATIONS INCLUDING ANY ITEMS MENTIONED IN EITHER THE SPECIFICATIONS OR ON THE DRAWINGS BUT NOT IN THE OTHER.
   1.4. WHERE USED ON THE PLANS AND IN THE SPECIFICATIONS AND WHERE NOT SPECIFICALLY NOTED OTHERWISE, THE TERM "PROVIDE" AND THE TERM "INSTALL" SHALL MEAN FURNISH, INSTALL, CONNECT AND TEST.
   1.5. UNLESS EXPLICITLY NOTED "BY OTHERS" OR "EXISTING", ALL ITEMS SHOWN GRAPHICALLY OR SPECIFIED BY NOTES AND DETAILS ON THE PLANS SHALL BE FURNISHED, INSTALLED, CONNECTED, AND TESTED AS NEEDED.
2. ADDITIONALLY, THE SCOPE OF WORK SHALL INCLUDE
   2.1. APPLICATION FOR TEMPORARY AND PERMANENT ELECTRICAL SERVICE, PERMITTING, INSPECTION, AND PAYMENT OF ALL ASSOCIATED FEES.
   2.2. TESTING AND COMMISSIONING OF ELECTRICAL SYSTEMS.
   2.3. EQUIPMENT RENTAL.
   2.4. TEMPORARY CONSTRUCTION POWER AND LIGHTING.
   2.5. PROVISIONS FOR MAINTAINING THE FUNCTIONALITY OF EXISTING TO REMAIN BUILDING COMMUNICATIONS, FIRE ALARM, SECURITY/ACCESS CONTROL, PUBLIC ADDRESS, AND BELL SYSTEMS THAT WILL BE AFFECTED BY THE WORK.

SUBMITTALS

1. PRODUCT DATA: SUBMIT CATALOG DATA SHOWING MANUFACTURER'S NAME AND CONTACT INFORMATION, ALL STANDARD FEATURES, AMPERAGE, VOLTAGE, AIC RATINGS, DIMENSIONS, WEIGHTS, LISTINGS & PRODUCT LABELS, MATERIAL TYPES, FINISHES AND CLEARLY INDICATING WHICH OPTIONAL FEATURES WILL BE PROVIDED.
   1.1. WHERE MULTIPLE SIZES ARE LISTED, INDICATE SIZES TO BE USED.
   1.2. WHERE MULTIPLE PRODUCTS ARE SHOWN ON THE SAME PAGE, INDICATE WHICH PRODUCTS TO BE USED.
2. SHOP DRAWINGS (WHERE APPLICABLE): MANUFACTURER OR CONTRACTOR PREPARED DRAWINGS SHOWING ALL RELEVANT DIMENSIONS, WEIGHTS, ELECTRICAL & MECHANICAL CONNECTION REQUIREMENTS, CONDUIT ENTRY POINTS, ASSEMBLY REQUIREMENTS, LIFTING REQUIREMENTS, LIFTING POINTS, REQUIRED CLEARANCES. INCLUDE PLAN VIEWS & ELEVATIONS.
   2.1. INCLUDE ALL RELEVANT ELECTRICAL DIAGRAMS INCLUDING SCHEMATIC AND INTERCONNECTION DIAGRAMS FOR POWER, SIGNAL, AND CONTROL WIRING.

COORDINATION

1. ALL POWER OUTAGES SHALL BE COORDINATED IN WRITING WITH OWNER ONE (1) WEEK (MIN) PRIOR TO THE OUTAGE.
2. COOPERATE FULLY WITH THE OWNER OR HIS REPRESENTATIVE DURING CONSTRUCTION OPERATIONS TO MINIMIZE CONFLICTS AND TO FACILITATE OWNER USAGE SO AS NOT TO INTERFERE WITH THE OWNER'S OPERATIONS.
3. MAINTAIN REQUIRED NEC WORKING SPACE AND DEDICATED EQUIPMENT SPACE AROUND ALL ELECTRICAL EQUIPMENT, CONTROLS PANELS, ETC THAT ARE SUBJECT TO MAINTENANCE, TESTING, OR USER INTERFACE. COORDINATE WITH OTHER TRADES. IF CLEARANCE CANNOT BE PROVIDED, THE CONTRACTOR SHALL NOTIFY THE ENGINEER PRIOR TO ROUGH–IN.

DELIVERY AND STORAGE

1. STORE ALL ELECTIRCAL/SPECIAL SYSTEMS EQUIPMENT/MATERIALS IN CLEAN, DRY SPACE LOCATED ABOVE GRADE. PROTECT FROM DIRT, WATER, CONSTRUCTION DEBRIS, TRAFFIC, FREEZE, AND DETERIORATION FROM SUN LIGHT.
2. MAINTAIN FACTORY WRAPPING OR PROVIDE APPROPRIATE COVER FOR ALL LARGE ELECTRICAL EQUIPMENT. FOLLOW ALL MANUFACTURER RECOMMENDATIONS FOR HUMIDITY AND MAX/MIN TEMPERATURES FOR STORING ELECTRICAL EQUIPMENT.

ELECTRICAL GENERAL CONDITIONS (CONT.)

QUALIFICATIONS

1. MANUFACTURER: COMPANY SPECIALIZING IN MANUFACTURING PRODUCTS SHOWN ON THE CONSTRUCTION DOCUMENTS WITH MINIMUM THREE YEARS DOCUMENTED EXPERIENCE
2. INSTALLER: A STATE LICENSED ELECTRICIAN WITH DOCUMENTED EXPERIENCE INSTALLING ALL EQUIPMENT SPECIFIED HERE IN SHALL DIRECTLY SUPERVISE ALL WORK. WHERE NOTED IN THE SPECIFICATIONS, REQUIRED BY CODE, OR REQUIRED BY THE MANUFACTURER, INSTALLER SHALL BE A MANUFACTURER TRAINED AND/OR CERTIFIED INSTALLER OF THE SPECIFIC PRODUCT TO BE INSTALLED.
3. WHERE TESTING IS REQUIRED BY THE CONSTRUCTION DOCUMENTS, EQUIPMENT MANUFACTURER, OR CODE; TESTING SHALL BE PERFORMED BY AN AGENCY WITH DOCUMENTED EXPERIENCE AND PROPERLY CALIBRATED, FULLY FUNCTIONING EQUIPMENT, THAT IS A MEMBER OF THE INTERNATIONAL ELECTRICAL TESTING ASSOCIATION, MANUFACTURER CERTIFIED, OR IS A NATIONALLY RECOGNIZED TESTING LABORATORY (NRTL), AND IS ACCEPTABLE TO THE AUTHORITY HAVING JURISDICTION.

QUALITY ASSURANCE

1. UNLESS OTHERWISE APPROVED, ALL EQUIPMENT SHALL BE NEW, PROPERLY DESIGNED, FROM A REPUTABLE MANUFACTURER MEETING THE SPECIFICATION QUALIFICATIONS, IN COMPLIANCE WITH THE SPECIFICATION REQUIREMENTS, AND IN FULL WORKING ORDER.
2. WHERE TWO OR MORE ITEMS OF THE SAME CLASS OF EQUIPMENT ARE REQUIRED, THESE ITEMS SHALL BE PRODUCTS OF A SINGLE MANUFACTURER; HOWEVER, THE COMPONENT PARTS OF THE ITEM NEED NOT BE THE PRODUCTS OF THE SAME MANUFACTURER UNLESS STATED IN THE TECHNICAL SECTION.
3. LISTING AND LABELING: WHERE REQUIRED, ALL ELECTRICAL COMPONENTS, DEVICES, AND ACCESSORIES SHALL BE LISTED AND LABELED AS DEFINED IN NFPA 70, ARTICLE 100, BY A TESTING AGENCY ACCEPTABLE TO AUTHORITIES HAVING JURISDICTION AND MARKED FOR THE INTENDED USE. TESTING AGENCY SHALL BE UL UNLESS NOTED OTHERWISE OR PRE–APPROVED BY OWNER AND AHJ.
4. ALL EQUIPMENT USED FOR TESTING SHALL BE IN FULL WORKING ORDER AND CALIBRATED PER THE MANUFACTURER'S RECOMMENDATIONS.

IDENTIFICATION

1. PROVIDE APPROPRIATE LABELS AND WARNING SIGNS FOR ALL EQUIPMENT, WIRING DEVICES, CONDUCTORS, CABLES, BOX, AND ENCLOSURES. PROVIDE BURIED DETECTABLE WARNING LABEL FOR UNDERGROUND CONDUITS.
2. CONDUCTOR TAGGING: TAG ALL CONDUCTORS AT MOTOR CONTROLS, PANELS, TERMINAL CABINETS AND JUNCTION BOXES. TAG CIRCUITS WHICH PASS THROUGH OTHER DEVICES SUCH AS LIGHTING CONTACTORS.
3. PROVIDE A TYPED PANEL DIRECTORY FOR EACH PANEL PROVIDED OR MODIFIED FOR THIS PROJECT. DIRECTORY SHALL IDENTIFY THE CIRCUIT NUMBER, LOADS SERVED, AND LOCATION OF LOADS BY ROOM NUMBER. MOUNT ON INSIDE OF EACH PANEL AND FILE THEM WITH THE OWNER WHEN THE WORK IS COMPLETED.
4. PROVIDE EACH PANEL WITH A MANUFACTURER PREPARED ARC FLASH HAZARD WARNING LABEL.
5. ALL ELECTRICAL EQUIPMENT SHALL BE IDENTIFIED BY MEANS OF 3"X1" (MIN)NAMEPLATES PERMANENTLY ATTACHED TO THE EQUIPMENT, PLATES SHALL BE METAL, PLASTIC, OR SIMILAR, BLACK WITH 1/4"h (MIN) ENGRAVED WHITE LETTERS.
6. JUNCTION AND PULL BOXES SHALL BE LABELED WITH PANEL NAME, CIRCUIT #, AND VOLTAGE.
7. RECEPTACLES SHALL BE LABELED WITH THE PANEL NAME AND CIRCUIT #. USE WHITE LABELS WITH BLACK TEXT.
8. FIRE ALARM, EMERGENCY/CRITICAL PWR, LIFE SAFETY LABELS, INCLUDING RECEPTACLES, SHALL BE COLOR CODED & ENGRAVED.

LIGHTING

GENERAL REQUIREMENTS

1. IF APPLICABLE, REFER TO ARCHITECTURAL REFLECTED CEILING PLAN FOR EXACT LIGHT FIXTURE LOCATIONS AND QUANTITIES.
2. EXAMINE THE AREA OF INSTALLATION TO VERIFY ADEQUATE SPACE AND MOUNTING PROVISIONS ARE PROVIDED FOR THE SPECIFIED LUMINAIRE PRIOR TO ORDERING LUMINAIRES.
3. VERIFY THAT LUMINAIRES WILL NOT INTERFERE WITH REQUIRED CLEARANCES FOR EQUIPMENT INCLUDING FILTER PULL SPACE, NEC WORKING SPACE IN FRONT OF DISCONNECTS, CONTROL PANELS, ETC.
4. COORDINATE EXIT LIGHT LOCATIONS WITH STRUCTURE AND BUILDING SYSTEMS TO INSURE EXIT SIGNS ARE VISIBLE.
5. PROVIDE GROUND WIRE AND ONE NEUTRAL CONDUCTOR PER CIRCUIT IN ALL LIGHTING CONDUIT.
6. LABEL ALL CIRCUIT BREAKERS SERVING EMERGENCY LIGHTING.
7. UNO, ALL EXIT SIGNS, EMERGENCY EGRESS PATHWAY LIGHT FIXTURES, LIGHTS NOTED "xE", AND LIGHTS SHOWN CROSS HATCHED SHALL BE CONNECTED TO THE SWITCHED AREA LIGHTING CIRCUIT FOR NORMAL OPERATION AND AN UNSWITCHED CIRCUIT FROM THE SAME OCPD TO AUTOMATICALLY CONTROL POWER TRANSFER TO AN INTEGRAL BATTERY PACK FOR 90 MINUTES OF EMERGENCY OPERATION WHEN LOSS OF NORMAL POWER IS SENSED ON THE UNSWITCHED CIRCUIT. PROVIDE A BATTERY STATUS INDICATOR MOUNTED IN A VISIBLE LOCATION.
8. INSTALL FIXTURES PLUMB, SQUARE AND LEVEL WITH CEILINGS AND WALLS AND SECURE FIXTURES PER MANUFACTURER'S PRINTED INSTRUCTIONS.
9. ADJUST AIMABLE FIXTURES, CLEAN, AND PROVIDED ALL FIXTURES WITH LAMPS PRIOR TO OWNER OCCUPANCY.
10. LUMINAIRE WHIPS SHALL BE FLEXIBLE METAL CONDUIT, 6FT MAX. SECURE TO STRUCTURE WITH LISTED SUPPORTS.

LIGHTING CONTROL REQUIREMENTS

1. U.N.O., LIGHTING SWITCHES IN ROOMS SHALL CONTROL ONLY FIXTURES IN THAT ROOM.
2. WHEN MORE THAN ONE(1) LIGHTING SWITCH IS SHOWN AT A LOCATION THEY SHALL BE GANGED TOGETHER.
3. OCCUPANCY SENSOR OFF DELAY SHALL BE SET BY EC AT END OF PROJECT TO 15 MINUTES. AMBIENT LIGHT OVERRIDE SHALL BE SET SUCH THAT THE LUMINAIRES ARE SWITCHED OFF WHEN APPROPRIATE FC LEVEL IS MEASURED ON THE FLOOR (REGARDLESS OF THE FOOTCANDLES MEASURED AT THE OCCUPANCY SENSOR).
4. INSTALL DIMMER SWITCHES ON THE LOAD SIDE OF OCCUPANCY SENSORS AND OTHER CONTROLS.
5. ALL EXTERIOR LIGHTING SHALL BE CONTROLLED AUTOMATICALLY. PROVIDE LIGHTING CONTACTOR TO CONTROL ALL EXTERIOR LIGHTING CIRCUITS BY A SINGLE PHOTOCELL AND/OR ASTRONOMICAL TIME CLOCK WITH HOLIDAY PROGRAMING. PHOTOCELL SHOULD BE ROOF MOUNTED. COORDINATE MOUNTING LOCATION WITH ARCHITECT.
6. ALL LUMINAIRES IN ROOMS WITH BI OR DUAL LEVEL SWITCHING SHALL BE PROVIDED WITH MULTIPLE OR MULTILEVEL BALLASTS AND WIRED TO ALLOW FOR EVENLY REDUCED ILLUMINATION THROUGHOUT THE SPACE. UNO, SWITCH "a" SHALL CONTROL THE OUTER LAMPS IN THE FIXTURES; SWITCH "b" SHALL CONTROL THE INNER LAMPS IN THE FIXTURES.

LUMINAIRES

1. ALL LIGHT FIXTURES/LAMPS SHALL BE UL LISTED AND CONFORM TO ALL APPLICABLE UL, ANSI AND NFPA STANDARDS.
2. REFER TO LUMINAIRE SCHEDULE FOR FIXTURE, BALLAST, AND LAMP SPECIFICATIONS. SUBSTITUTIONS SHOULD BE APPROVED PRIOR TO BID.

CONDUCTORS AND CABLES

GENERAL REQUIREMENTS

1. ALL BUILDING WIRING SHALL BE INSULATED COPPER CONDUCTORS RUN FROM LOAD TO SOURCE INSIDE RACEWAY, CONTINUOUS (WITHOUT SPLICES) BETWEEN JUNCTION AND PULL BOXES, AND EXPOSED INSIDE PANELS ONLY.
2. ALL SINGLE POLE CIRCUITS SHALL HAVE A DEDICATED NEUTRAL CONDUCTOR ROUTED TO THE SOURCE PANEL.
3. FIELD VERIFY WHETHER A NEUTRAL IS REQUIRED FOR ALL TWO AND THREE POLE CIRCUITS. FOR ALL LOADS EXCEPT MOTORS, A NEUTRAL IS ASSUMED TO BE REQUIRED UNLESS FIELD DETERMINED TO BE UNNECESSARY.
4. ALL POWER & CONTROL WIRING ROUTED THROUGH RETURN AIR PLENUMS SHALL BE PLENUM RATED.
5. UP TO 3–20A CIRCUITS MAY SHARE A RACEWAY FOR HOMERUNS WHERE SUITABLE & PER NEC CONDUIT FILL RULES.
6. 120V, 20A. HOME RUNS LONGER THAN 100' AND 277V, 20A. HOME RUNS LONGER THAN 150' SHALL BE #10 MIN.
7. ALL HOME RUNS SHALL BE IN CONDUIT FROM PANEL TO FIRST WIRING DEVICE. MC AND/OR AC CABLE MAY BE USED AFTER FIRST DEVICE ON A CIRCUIT WHERE CONCEALED.
8. ALL WIRING SHALL BE COLOR–CODED AS FOLLOWS:

	208Y/120 VOLT SYSTEM	480Y/277 VOLT SYSTEM
NEUTRAL:	WHITE	GRAY
PHASE A OR L1	BLACK	BROWN
PHASE B OR L2	RED	ORANGE
PHASE C OR L3	BLUE	YELLOW
GROUND	GREEN	GREEN
ISOLATED GROUND	GREEN W/YELLOW TRACER	GREEN W/YELLOW TRACER

BUILDING WIRE

1. CONDUCTOR: SOFT DRAWN COPPER, 98% CONDUCTIVITY.
2. INSULATION RATING: 600V, 90°C
3. INSULATION MATERIAL: THERMOPLASTIC TYPE THHN/THWN U.N.O. USE XHHW WHERE INSTALLED IN UNDERGROUND CONDUIT.
4. CONDUCTORS #8 AWG AND LARGER SHALL BE STRANDED.
5. CONDUCTORS #10 AWG SHALL BE SOLID OR STRANDED. FINAL CONNECTION SHALL BE MADE WITH WIRE TYPE CONSISTENT WITH UL LISTING AND MANUFACTURER REQUIREMENTS FOR EQUIPMENT, FIXTURE, AND/OR DEVICE.
6. CONDUCTORS #12 SHALL BE SOLID.

ARMORED CABLE

1. CONDUCTOR: SOFT DRAWN COPPER, 98% CONDUCTIVITY.
2. INSULATION: 600V, 90°C, THHN/THWN U.N.O.
3. ARMOR: STEEL OR ALUMINUM; INTERLOCKED METAL TAPE.

METAL CLAD CABLE

1. CONDUCTOR: SOFT DRAWN COPPER, 98% CONDUCTIVITY.
2. INSULATION: 600V, 90°C, THHN/THWN U.N.O.
3. ARMOR: STEEL OR ALUMINUM; INTERLOCKED METAL TAPE.

CONNECTORS AND TERMINATIONS

1. PROVIDE FACTORY–FABRICATED, METAL CONNECTOR OF THE SIZE, RATING, MATERIAL, TYPE AND CLASS REQUIRED BY EQUIPMENT MANUFACTURER AND THE NEC.
2. CONNECTORS SHALL BE INSULATED TO 600V AND CONDUCTING COMPONENTS SHALL MATCH MATERIAL OF WIRING (COPPER U.N.O.)
3. TERMINAL LUGS FOR WIRES #6 AWG AND SMALLER SHALL BE SOLDERLESS, COMPRESSION TYPE COPPER.
4. ~~TERMINAL LUGS FOR #4 AWG AND LARGER SHALL BE COMPRESSION TYPE COPPER WITH INSULATING SEALING COLLARS.~~

15KV Primary Distribution Cable is Filled Strand Aluminum Conductor w/ 105°C Rating

GROUNDING AND BONDING

GENERAL REQUIREMENTS

1. ALL RACEWAYS AND CIRCUITS SHALL BE PROVIDED WITH A NEC 250 COMPLIANT GREEN GROUND CONDUCTOR.
2. ALL EQUIPMENT SHALL BE PROPERLY BONDED.
3. UPON COMPLETION OF THE WORK, ALL PARTS OF THE ELECTRICAL INSTALLATION SHALL BE MEGGER TESTED AND PROVED TO BE FREE OF UNWANTED GROUNDS AND OTHER DEFECTS.
4. INSTALL BRANCH CIRCUITS FEEDING ISOLATED GROUND RECEPTACLES WITH SEPARATE INSULATED GROUNDING CONDUCTOR, CONNECTED ONLY AT ISOLATED GROUND RECEPTACLE, GROUND TERMINALS, AND GROUND BUS OF SERVING PANEL.

PRODUCTS

1. ROD ELECTRODES: 10 FOOT, 3/4" DIAMETER, COPPER. EXOTHERMIC WELDED CONNECTION.
2. GROUNDING AND BONDING WIRE: 600V, STRANDED COPPER; SOLID COPPER MAY BE USED FOR #8 AWG AND SMALLER. MATCH BUILDING WIRE INSULATION EXCEPT WHERE NOTED AS BARE.
3. MECHANICAL CONNECTORS: BRONZE CONNECTORS, SUITABLE FOR GROUNDING AND BONDING APPLICATIONS. LISTED AND LABELED BY A NATIONALLY RECOGNIZED TESTING LABORATORY ACCEPTABLE TO THE A.H.J.
4. GROUND BUS: RECTANGULAR ANNEALED COPPER, MIN. 12" LONG, 1/4" BY 2" IN CROSS SECTION U.N.O.

SERVICE ENTRANCE GROUNDING ELECTRODE SYSTEM

1. ALL RACEWAYS AND CIRCUITS SHALL BE PROVIDED WITH A NEC 250 COMPLIANT GREEN GROUND CONDUCTOR.
2. AT A MINIMUM, A GROUNDING ELECTRODE CONDUCTOR, SIZED PER NEC ARTICLE 250, SHALL BE CONNECTED FROM THE GROUND BUS OF THE SERVICE ENTRANCE DISCONNECT TO A 3/4"x10' COPPER CLAD STEEL GROUND ROD, TO THE BUILDING METAL COLD WATER AND GAS PIPING AT THE POINT OF ENTRANCE INTO THE BUILDING, STRUCTURAL STEEL, AND 20' OF BARE COPPER ENCASED IN THE SLAB. ADDITIONAL GROUNDING REQUIREMENTS MAY BE SPECIFIED ON THE PLANS.
3. ROUTING OF GROUNDING ELECTRODE CONDUCTORS SHALL BE IN METAL CONDUIT IN ALL LOCATIONS THAT ARE SUBJECT TO PHYSICAL ABUSE OR ENVIRONMENTAL DETERIORATION SUCH AS EXTERIOR MOUNTED, EXPOSED BELOW LAY IN CEILING, ETC.
4. PROVIDE A #4 GROUND FROM THE SERVICE ENTRANCE GROUND BUS TO ALL TELEPHONE SERVICE BOARDS AND COMMUNICATIONS EQUIPMENT ROOMS AND TERMINATE AT A GROUND BUS.
5. GROUNDING SYSTEM RESISTANCE SHALL BE 5 OHMS MAXIMUM. SYSTEM SHALL BE TESTED IN ACCORDANCE WITH IEEE 142. PROVIDE ADDITIONAL GROUNDING ELECTRODES AS REQUIRED TO ACHIEVE RESISTANCE.

RACEWAYS AND BOXES

GENERAL REQUIREMENTS

1. PROVIDE RACEWAY AND BOXES AS SPECIFIED BELOW FOR POWER, LIGHTING, COMMUNICATIONS, FIRE ALARM, ACCESS CONTROL/SECURITY, CONTROLS, AND OTHER SPECIAL SYSTEMS.
2. PROVIDE RACEWAY AND BOXES FOR ALL EQUIPMENT; LIGHTING; WIRING DEVICES; COMMUNICATIONS EQUIPMENT AND OUTLETS; FIRE ALARM EQUIPMENT, APPLIANCES, AND DEVICES; ACCESS CONTROL/SECURITY POINTS; CONTROLS POINTS; AND OTHER SPECIAL SYSTEMS SHOWN ON PLANS.
3. PROVIDE RACEWAY BOXES AT OTHER LOCATIONS AS REQUIRED FOR SPLICES, TAPS, WIRE PULLING, EQUIPMENT CONNECTIONS, AND COMPLIANCE WITH REGULATORY REQUIREMENTS. RACEWAY AND BOXES ARE SHOWN IN APPROXIMATE LOCATIONS UNLESS DIMENSIONED. PROVIDE RACEWAY TO COMPLETE WIRING SYSTEM.

CONDUIT

1. CONTRACTOR SHALL FURNISH AND INSTALL ALL CONDUITS SERVING ALL EQUIPMENT, INCLUDING BUT NOT LIMITED TO, LIGHTING, RECEPTACLES, HEATING, AIR CONDITIONING, PLUMBING EQUIPMENT, TELEPHONE, DATA, SPEAKERS, AND ELECTRICAL EQUIPMENT.
2. ABOVE GRADE CONDUITS SHALL BE GALVANIZED RMC, IMC OR EMT UNLESS OTHERWISE SPECIFIED IN SPECIFICATIONS OR ON DRAWINGS. ALL CONDUIT IS TO BE UL LABELED. EMT CONNECTORS SHALL BE STEEL COMPRESSION OR SET SCREW TYPE.
3. UNDER GROUND/SLAB CONDUIT SHALL BE RIGID STEEL, OR SCHEDULE 40 PVC. PROVIDE WRAPPED RMC WHERE ENTERING/EXITING SLABS OR GRADE, AND FOR ELBOWS 1" AND LARGER.
4. MINIMUM SIZE OF CONDUIT SHALL BE 3/4" AND 1" FOR ALL UNDER GROUND CONDUIT.
5. CONDUIT SHALL BE CONCEALED EXCEPT FOR UNFINISHED AREAS, SUCH AS EQUIPMENT ROOMS. EXPOSED CONDUIT SHALL BE ALLOWED ONLY AS NOTED ON PLAN AND AS APPROVED BY THE G.C.'S CONSTRUCTION MANAGER. PAINTING OF CONDUITS, NOTED ON DRAWINGS OR SPECIFICATIONS WILL BE BY THE G.C.
6. WHERE EXPOSED, CONDUIT SHALL BE RMC OR IMC BELOW 10', AND RMC, IMC, OR EMT ABOVE 10'. PROVIDE RMC IN ALL LOCATIONS WHERE SUBJECT TO PHYSICAL DAMAGE.
7. SUPPORT ALL CONDUIT, INCLUDING SEISMIC AND SWAY BRACING, IN ACCORDANCE WITH THE NEC AND LOCAL CODES.
8. ALL CONDUITS MUST BE SIZED PER NEC AND LOCAL CODES.

OUTLET BOXES

1. ALL OUTLET BOXES SHALL BE GALVANIZED PRESSED STEEL OF THE STANDARD KNOCKOUT TYPE. NO ROUND OUTLET BOXES SHALL BE PERMITTED, EXCEPT AS SPECIFICALLY NOTED ON DRAWINGS. CONCEALED BOXES SHALL NOT BE LESS THAN 4" SQUARE AND 1–1/2" DEEP, WITH PLASTER RINGS.
2. ALL KNOCKOUT BOXES, UPON WHICH LIGHTING FIXTURES ARE TO BE INSTALLED, SHALL BE EQUIPPED WITH 3/8" FIXTURE STUDS.
3. EXTERIOR BOXES SHALL BE CAST RUST–RESISTING METAL WITH GASKETED COVERS.
4. INSTALL BOXES RIGIDLY FROM BUILDING STRUCTURE AND SUPPORT INDEPENDENTLY OF THE CONDUIT SYSTEM. ALSO PROVIDE SUITABLE BOX EXTENSIONS TO EXTEND BOXES TO FINISHED FACES OF FLOORS, CEILINGS, WALLS, ETC. ALL OUTLET BOXES SHALL BE PROVIDED WITH CADDY "QUICK–MOUNT BOX SUPPORT" TO MINIMIZE THE DEFLECTION THAT OCCURS WHEN PLUGGING/UNPLUGGING INTO THESE DEVICES.
5. USE CONCRETE TIGHT, MASONRY RATED BOXES AND FITTINGS WHERE INSTALLED IN CONCRETE, STONE, BRICK, OR CMU.
6. EXTERIOR OUTLET BOXES SHALL BE CAST METAL, GASKETED, AND RATED NEMA 3R MIN.

JUNCTION AND PULL BOXES

1. THE PLANS INDICATE ONLY SCHEMATIC ROUTINGS FOR CONDUIT RUNS. CONTRACTOR SHALL FURNISH AND INSTALL ADDITIONAL BOXES WHERE REQUIRED BY FIELD CONDITIONS OR BY CODE.
2. BOXES AND COVERS SHALL BE GALVANIZED STEEL OF CODE GAUGE SIZE.
3. INSTALL BOXES RIGIDLY SUPPORTED FROM THE BUILDING STRUCTURE AND SUPPORTED INDEPENDENT OF THE CONDUIT SYSTEM.
4. ARRANGE CIRCUITS TO AVOID THE USE OF JUNCTION BOXES IN INACCESSIBLE LOCATIONS. THE USE OF JUNCTION BOXES ABOVE DRYWALL CEILINGS SHOULD BE IN LOCATIONS NEAR ACCESS FRAMES USED FOR DIFFUSERS AND RETURN AIR GRILLES OR ACCESS PANELS AS LOCATED ON PLANS.
5. JUNCTION AND PULL BOXES MUST BE LABELED WITH CIRCUIT NUMBER IDENTIFICATION AND SYSTEM TYPE ON COVER.
6. PROVIDE BOXES FOR UTILITY SERVICE CONDUIT(S) OR CABLING PER UTILITY PROVIDER'S SPECIFICATIONS.
7. NONMETALLIC HANDHOLES MAY BE USED FOR SITE LIGHTING AND CONTROLS CIRCUITS.
8. USE CONCRETE TIGHT, MASONRY RATED BOXES AND FITTINGS WHERE INSTALLED IN CONCRETE, STONE, BRICK, OR CMU.
9. EXTERIOR BOXES SHALL BE CAST METAL, GASKETED, AND RATED NEMA 3R MIN.

WIRING DEVICES

GENERAL REQUIREMENTS

1. WIRING DEVICE COLOR SHALL MATCH THE CEILING/WALL FINISH COLOR SELECTED BY ARCHITECT, UNLESS OTHERWISE INDICATED. ALL ISOLATED GROUND (I.G) TYPE RECEPTACLES SHALL BE ORANGE UNLESS OTHERWISE NOTED.
2. RECEPTACLES REQUIRING AMPERAGES, VOLTAGES OR CONFIGURATIONS DIFFERENT FROM THE DUPLEX CONVENIENCE RECEPTACLES ABOVE SHALL BE AS INDICATED ON THE DRAWINGS.
3. PROVIDE OTHER RECEPTACLES OF A QUALITY, MATERIAL AND WORKMANSHIP EQUAL TO THAT SPECIFIED FOR DUPLEX CONVENIENCE RECEPTACLES.
4. LOCATE THE SWITCHES APPROXIMATELY 4'–0" ABOVE THE FINISHED FLOOR ELEVATION OR NEAREST BLOCK COURSE (WITHIN A.D.A. REQUIREMENTS), U.N.O. THE LONG DIMENSION OF THE SWITCHES SHALL BE VERTICAL.
5. LOCATE RECEPTACLES APPROXIMATELY 1'–6" ABOVE THE FINISHED FLOOR ELEVATION OR NEAREST BLOCK COURSE (WITHIN A.D.A. REQUIREMENTS), U.N.O. THE LONG DIMENSION OF RECEPTACLES SHALL BE VERTICAL.

PRODUCTS

1. PROVIDE TOTALLY ENCLOSED, 20 AMPERE, 120/277 VOLT, QUIET A/C GENERAL USE SNAP SWITCHES.
2. SWITCHES SHALL BE SPECIFICATION GRADE AS MANUFACTURED BY HUBBEL, P&S, OR LEVITON.
3. PROVIDE NEMA CONFIGURATION 5–20R DUPLEX 125 VOLT GROUNDING TYPE RECEPTACLES RATED FOR 20 AMPERES UNLESS OTHERWISE INDICATED ON THE DRAWINGS.
4. RECEPTACLES SHALL BE SPECIFICATION GRADE AS MANUFACTURED BY HUBBELL, P&S OR LEVITON.
5. PROVIDE COVER OR DEVICE PLATES FOR OUTLET BOXES AS FOLLOWS UNLESS OTHERWISE NOTED:
   5.1. FINISHED AREAS: THERMOPLASTIC – COLOR TO MATCH DEVICE.
   5.2. UNFINISHED AREAS: ZINC COATED SHEET METAL, ALUMINUM, OR CAST METAL AS APPROPRIATE FOR THE TYPE OF BOX.
   5.3. EXTERIOR AREAS: COPPER FREE ALUMINUM WITH GRAY, POWDER EPOXY FINISH, GASKET, WEATHERPROOF, CROUSE–HINDS "WLRD" FOR DUPLEX RECEPTACLES AND WLRS FOR SINGLE RECEPTACLES OR EQUAL.
   5.4. TELEPHONE, COMMUNICATION, AND SIGNAL OUTLET PLATES, SHALL MATCH THOSE USED FOR RECEPTACLES AND SWITCHES. ALL OUTLET AND/OR JUNCTION BOXES SHALL BE COMPLETE WITH A COVER PLATE BY THIS CONTRACTOR.
   5.5. WHERE DEVICES ARE GANGED, THEY SHALL BE INSTALLED UNDER A COMMON COVERPLATE.

EQUIPMENT

TRANSFORMERS

1. TRANSFORMERS SHALL BE CONTINUOUSLY RATED ISOLATING TYPE FOR 60 HERTZ SERVICE UNLESS OTHERWISE INDICATED.
2. INSULATION SYSTEMS SHALL BE 220 DEGREES C (150 DEGREES RISE).
3. ENCLOSURES FOR TRANSFORMERS SHALL BE METALLIC, SUITABLE FOR INDOOR AND OUTDOOR INSTALLATION AS APPLICABLE AND RODENT PROOF.
4. MANUFACTURERS SHALL BE SQUARE D, CUTLER HAMMER, SEIMENS, POWERSMITHS, PQI, OR G.E.. FRACTIONAL KVA TRANSFORMERS SHALL BE MANUFACTURED BY EDWARDS OR THE SPECIAL EQUIPMENT MANUFACTURER IN WHICH THE TRANSFORMERS ARE USED.
5. FOUR APPROVED VIBRATION DAMPENERS PER TRANSFORMER SHALL BE EMPLOYED AS NECESSARY TO AVOID TRANSMITTING ANY VIBRATION TO THE BUILDING STRUCTURE. SIZES OF THE MOUNTINGS SHALL BE SELECTED ON THE BASIS OF THE WEIGHT OF THE TRANSFORMER, USING:
   A. A MINIMUM 1" THICK RUBBER–CORK–RUBBER SANDWICH TYPE FOR FLOOR MOUNTING.
   B. A SPRING TYPE FOR SUSPENSION MOUNTING.
   C. TWO(2) SPRING TYPE AT THE TOP (WITH TWO (2) STEEL BRACKETS) AND TWO (2) RUBBER–IN COMPRESSION TYPE AT THE BOTTOM (STAND–OFF) FOR WALL MOUNTING.
6. NO CONDUITS SHALL BE ATTACHED DIRECTLY TO THE TRANSFORMER. AT EACH ATTACHMENT, PROVIDE A VIBRATION DAMPENING ASSEMBLY CONSISTING OF:
   A. AT&B #5721, 2, 3 ETC., OR EQUIVALENT FEMALE HUB TYPE LIQUID–TIGHT CONNECTOR BY STEEL CITY, EFCOR OR APPROVED EQUAL.
   B. T&B #5331, 2, 3 ETC., OR EQUIVALENT MALE HUB TYPE LIQUID–TIGHT CONNECTOR WITH AN INSULATED THROAT BY STEEL CITY, EFCOR OR APPROVED EQUAL.
   C. SHORT LENGTH (24" PLUS OR MINUS) OF LIQUID–TIGHT FLEXIBLE CONDUIT.
   D. A BONDING JUMPER OF NEC SIZE OUTSIDE OF THE ASSEMBLY.
7. FLOOR MOUNTING: ALL FLOOR MOUNTED TRANSFORMERS SHALL BE INSTALLED ON A 4" HIGH CONCRETE PAD. THIS CONTRACTOR SHALL FURNISH AND INSTALL CONCRETE PAD.

PANELBOARDS

1. ACCEPTABLE MANUFACTURERS: SQUARE D, EATON, SEIMENS, G.E.. PANELBOARDS SHALL BE ENCLOSED DEAD FRONT SAFETY TYPE WITH FEATURES AND RATINGS AS SCHEDULED ON THE DRAWINGS.
2. PANELS KNOWN AS "LOAD CENTERS" ARE UNACCEPTABLE.
3. MOLDED CASE CIRCUIT BREAKERS SHALL BE AS SCHEDULED ON THE DRAWINGS AND SPECIFIED IN THIS DIVISION.
4. ALL BUS BARS SHALL BE RECTANGULAR, SOLID COPPER.
5. SPACE, WHERE SHOWN IN PANEL SCHEDULES, DESIGNATES SPACE FOR FUTURE PROTECTIVE DEVICES AND SHALL INCLUDE BUS AND SUPPORT.
6. INSTALL CABINETS SO THAT CENTER OF THE TOP BREAKER DOES NOT EXCEED 6'–6" ABOVE THE FINISHED FLOOR.
7. ENTRIES ON DIRECTORY CARDS SHALL BE TYPED, COMPLETE AND ACCURATE.
8. ALL BOLTED CONNECTIONS SHALL BE TORQUED IN ACCORDANCE WITH MANUFACTURER'S STANDARDS.
9. ELECTRICAL CONTRACTOR SHALL ARRANGE CIRCUITS AS NEAR AS POSSIBLE TO CIRCUIT NUMBERS ON THE DRAWINGS. AT COMPLETION OF JOB, ELECTRICAL CONTRACTOR SHALL TAKE CURRENT READING CHECKS OF RESPECTIVE PHASES. A MINIMUM OF CIRCUIT CONNECTIONS SHALL BE REARRANGED TO BALANCE AS CLOSELY AS POSSIBLE, THE LOAD IN THE PANEL.
10. ALL BREAKERS SHALL BE BOLT–ON TYPE.
11. PROVIDE (3) SPARE 1" CONDUITS INTO ACCESSIBLE CEILING SPACE WHERE PANELS ARE FLUSH–MOUNTED.

SAFETY SWITCHES

1. SAFETY SWITCHES SHALL BE THE ENCLOSED HEAVY–DUTY TYPE (TYPE HD) WITH QUICK–MAKE, QUICK–BREAK MECHANISM AND EXTERNAL PAD LOCKABLE OPERATING HANDLE.
2. SAFETY SWITCHES SHALL BE RATED FOR 240 OR 600 VOLTS AS APPLICABLE. THEY SHALL BE HORSEPOWER RATED WHEN USED IN MOTOR CIRCUITS.
3. SAFETY SWITCHES SHALL BE FUSIBLE OR NON–FUSIBLE 2, 3, OR 4 POLE AS INDICATED ON THE DRAWINGS.
4. SAFETY SWITCHES SHALL BE SINGLE THROW UNLESS OTHERWISE INDICATED ON THE DRAWINGS.
5. ENCLOSURES SHALL BE NEMA 1 INDOORS AND NEMA 3R OUTDOORS UNLESS OTHERWISE INDICATED ON THE DRAWINGS.
6. MANUFACTURER SHALL BE SQUARE D, SIEMENS, G.E., OR EATON. ALL SAFETY SWITCHES SHALL BE BY ONE MANUFACTURER.

MOTOR STARTERS

1. PROVIDE MOTOR STARTERS (FUSED OR NON–FUSED COMBINATION TYPE AS INDICATED ON DRAWINGS) AND CONTROL DEVICES REQUIRED FOR THIS PROJECT. STARTERS SHALL BE PROVIDED WITH CONTROL COILS, OVERLOADS, CONTROL TRANSFORMER WITH FUSED SECONDARY CONTROL CIRCUIT, (2) N.O. AND (2) N.C. AUXILIARY CONTACTS, HAND–OFF–AUTO SELECTOR SWITCH AND RUNNING PILOT LIGHT, UNLESS OTHERWISE NOTED. PROVIDE AND INSTALL INTERLOCK WIRING CONTROL DEVICES. ALL FUSES SHALL BE DUAL ELEMENT TYPE. PROVIDE "BLOWNFUSE" INDICATOR LAMPS IN COVER.
2. STARTERS SHALL BE SQUARE D, G.E., EATON, OR SIEMENS.
3. THE ELECTRICAL CONTRACTOR SHALL VERIFY THE EXACT NUMBER OF NORMALLY OPEN AND NORMALLY CLOSE AUXILIARY CONTACTS AND CONTROL VOLTAGE REQUIREMENTS FOR EACH STARTER WITH THE TEMPERATURE CONTROL CONTRACTOR PRIOR TO ORDERING STARTERS.
4. REFER TO MECHANICAL CONSTRUCTION DOCUMENTS FOR ELECTRICAL CHARACTERISTICS OF EQUIPMENT. STARTERS SHALL BE REQUIRED FOR ALL MOTORS, UNLESS SPECIFICALLY NOTED ON THE MECHANICAL CONSTRUCTION DOCUMENTS AS BEING FURNISHED INTEGRAL TO THE EQUIPMENT.

FUSES

1. THE CONTRACTOR SHALL FURNISH A COMPLETE SET OF FUSES FOR ALL SWITCHES, PLUS FUSIBLE EQUIPMENT FURNISHED BY OTHER TRADES. UNLESS INDICATED OTHERWISE ON PLANS, THE FUSES SHALL BE OF THE FOLLOWING TYPES:
   A. FUSES 601 TO 6000 AMPS SHALL BE UL CLASS. TRADE TYPE SHALL BE KRP–C AS MANUFACTURED BY THE BUSSMANN COMPANY.
   B. FUSES 1/10 TO 600 AMPS SHALL BE UL CLASS RK1. TRADE TYPE SHALL BE LOW PEAK LPS–RK (600V) AND LPN–RK (250V) AS MANUFACTURED BY THE BUSSMANN COMPANY.
   C. ALL OTHER FUSES SHALL BE DUAL–ELEMENT CURRENT–LIMITING TYPE WITH 200,000 AMPERES SYMMETRICAL INTERRUPTING CAPACITY.
2. FUSES SHALL BE MANUFACTURED BY BUSSMANN, GOULD–SHAWMUTT, OR RELIANCE.
3. SPARE FUSES AMOUNTING TO A DUPLICATE SET OF EACH SIZE INSTALLED SHALL BE TURNED OVER TO THE OWNER UPON COMPLETION OF THE PROJECT. PROVIDE AND PLACE IN A SPARE FUSE CABINET SIMILAR TO BUSSMANN # SFC.
4. THIS CONTRACTOR SHALL REPLACE ALL FUSES BLOWN DURING CONSTRUCTION.

SPECIAL SYSTEMS

GENERAL REQUIREMENTS

1. SPECIAL SYSTEMS INCLUDE, BUT ARE NOT LIMITED TO, TELECOMMUNICATIONS, FIRE ALARM, AUDIO/VIDEO, ACCESS CONTROL SYSTEMS.
2. FOR SPECIAL SYSTEMS EQUIPMENT AND DEVICES SHOWN ON THE CONSTRUCTION DOCUMENTS, OR EQUIPMENT AND DEVICES THAT CAN BE REASONABLY IMPLIED AS REQUIRED TO OPERATE ITEMS SHOWN, ELECTRICAL CONTRACTOR SHALL BE RESPONSIBLE FOR POWER, RACEWAY/BOX/ENCLOSURES ROUGH–IN, AND INFRASTRUCTURE PROVISION EVEN IF SAID SPECIAL SYSTEMS ARE PROVIDED BY A SPECIALIST CONTRACTOR, OWNER'S AGENT, OR UNDER SEPARATE CONTRACT.
3. TELECOMMUNICATIONS: IT CABLING, JACKS, EQUIPMENT RACKS, NETWORKING EQUIPMENT, AND PATCH PANELS WILL BE PROVIDED AND INSTALLED BY TELECOM CONTRACTOR. ALL OTHER WORK BY ELEC. CONTRACTOR
4. POWER LIMITED AND NON POWER LIMITED CABLE SHALL NOT SHARE COMMON RACEWAYS OR ENTER JUNCTION BOXES THROUGH THE SAME OPENING.

COA PROJECT NO: 586082

PROFESSIONAL ENGINEER, NEW MEXICO, 22680
5/31/2017

NO.	REVISION DESCRIPTION	DATE	BY
1			
2			
3			
4			
5			

KIRTLAND AIR FORCE BASE BULK FUELS FACILITY
KAFB–106239 CONVEYANCE LINE

GENERAL NOTES & SPECIFICATIONS

SMITH ENGINEERING COMPANY
2201 SAN PEDRO NE BLDG 4, SUITE 200
ALBUQUERQUE, NM 87110

EEA CONSULTING ENGINEERS

JOB NO: 116112
DATE: MAY 3, 2017
SHEET: E-001
NO: 22 of 27

GENERAL NOTES:

A. SEE DRAWING E-000 FOR SYMBOLS & LEGENDS.

B. SEE DRAWING E-001 FOR GENERAL NOTES AND SPECIFICATIONS.

KEYED NOTES:

(1) PROVIDE 2" CONDUIT FOR FIBER RUN INSIDE THE GROUNDWATER TREATMENT BUILDING. ROUTE OVERHEAD FROM NW CORNER TO CP-101 IN THE SOUTHEAST CORNER ELECTRICAL ROOM.

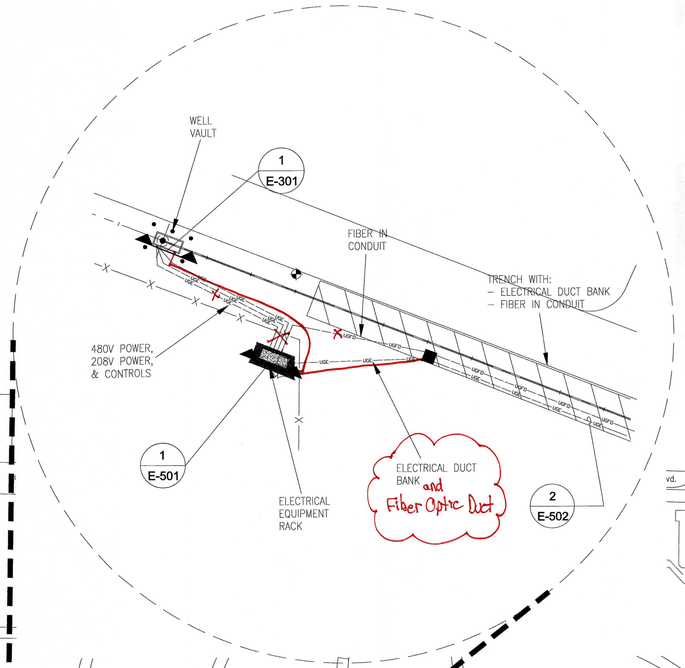

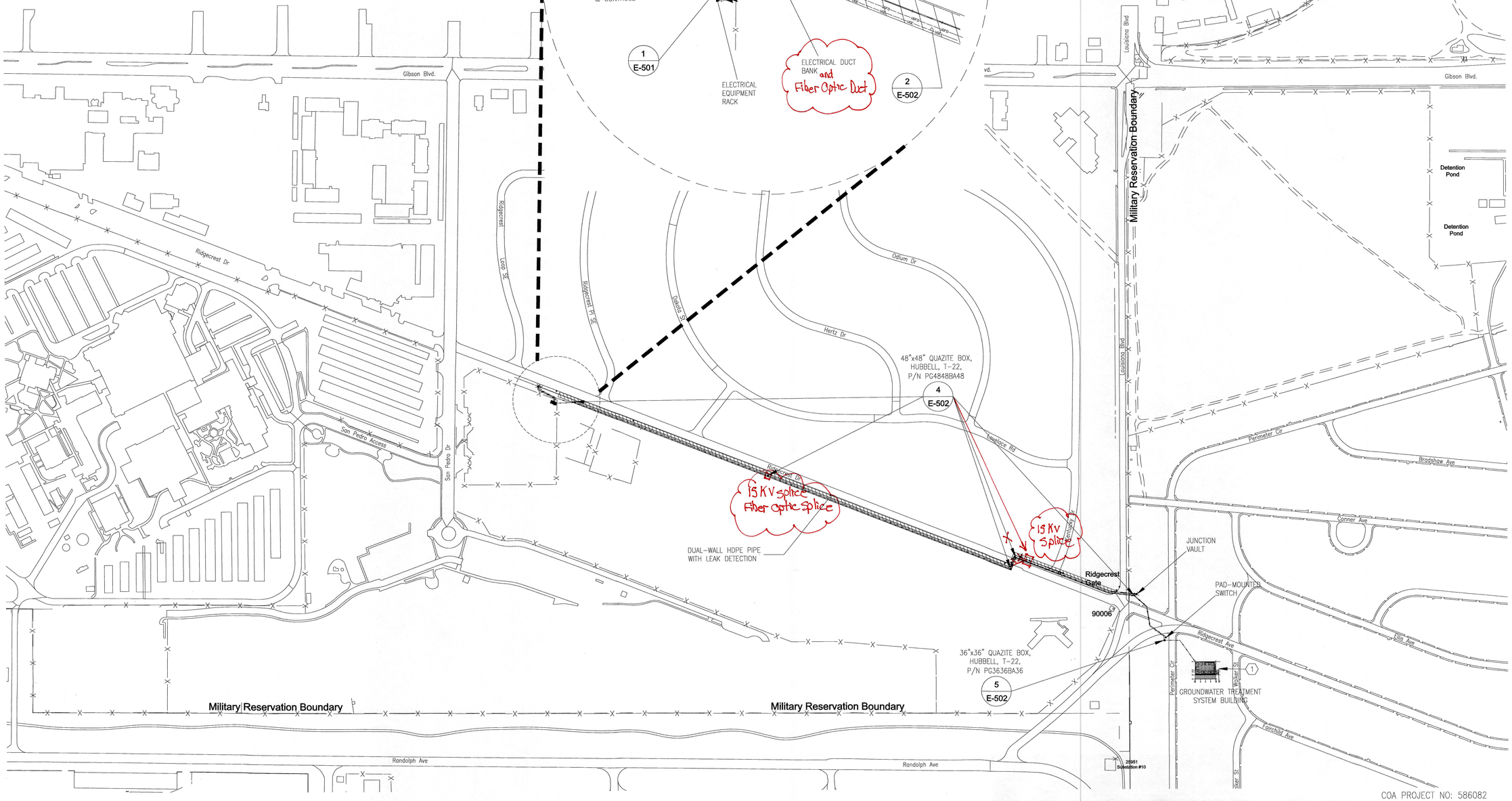

MICHAEL TODD WELD
STATE OF NEW MEXICO
22680
PROFESSIONAL ENGINEER
5/31/2017

NO.	REVISION DESCRIPTION	DATE	BY
5			
4			
3			
2			
1			

KIRTLAND AIR FORCE BASE BULK FUELS FACILITY
KAFB-106239 CONVEYANCE LINE

ELECTRICAL PLAN

SMITH ENGINEERING COMPANY
2201 SAN PEDRO NE BLDG 4, SUITE 200
ALBUQUERQUE, NM 87110
EEA CONSULTING ENGINEERS

JOB NO: 116112
DATE: MAY 3, 2017
SHEET NO: E-201 23 of 27

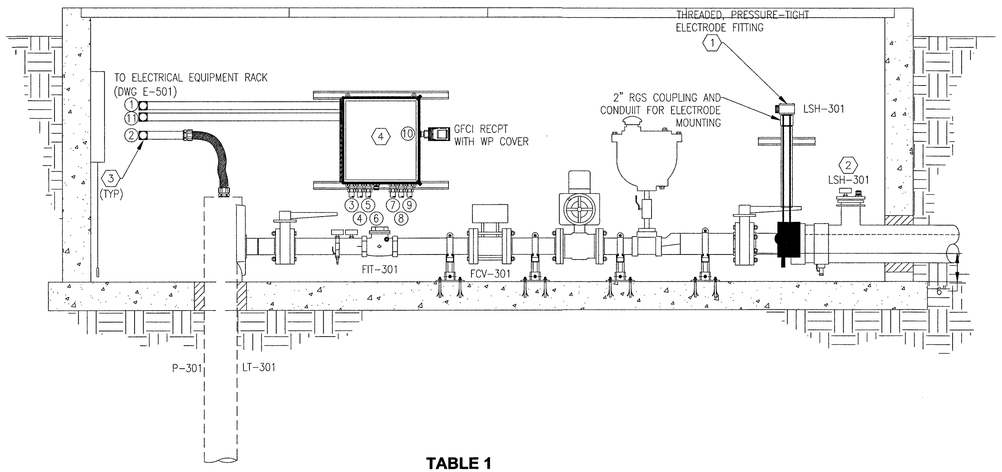

TABLE 1

CONDUIT AND CIRCUIT ASSIGNMENT

①	1 1/4" RGS	14-1/C #14AWG	WELL VAULT TB (CONTROLS)	⑦	3/4" FLEX *	1-TWSP #16AWG	LT-301 ANALOG SIGNAL
②	1 1/4" RGS/FLEX *	3-1/C #4AWG, #8G	PUMP P-10X	⑧	3/4" FLEX *	1-TWSP #16AWG	FIT-301 ANALOG SIGNAL
③	3/4" FLEX *	2-1/C #12AWG, #12G	FIT-301 CONTROL POWER	⑨	3/4" FLEX *	1-TWSP #16AWG	FCV-301 ANALOG SIGNAL
④	3/4" FLEX *	2-1/C #12AWG, #12G	FCV-301 CONTROL POWER	⑩	3/4" RGS	2-1/C #12AWG, #12G	GFCI RECEPTACLE
⑤	3/4" FLEX *	2-1/C #14AWG	LSH-301 PROBES	⑪	1" RGS	6-1/C #12, 3-1/C #12G	WELL VAULT TB (POWER)
⑥	3/4" CGB FITTING	1-2/C #14AWG	LSH-301 PROBE WIRES				

* ALL FLEX SHALL BE LIQUIDTIGHT FLEXIBLE METAL CONDUIT

① WELL VAULT SECTION
3/4" = 1'-0"

GENERAL NOTES:

A. SEE DRAWING E-000 FOR SYMBOLS & LEGENDS.

B. SEE DRAWING E-001 FOR GENERAL NOTES AND SPECIFICATIONS.

KEYED NOTES:

① INSTALL A WARRICK ELECTRODE FITTING CATALOG NUMBER 3E2A WITH TWO PROBES CATALOG NUMBER 3R2C4. GROUND REFERENCE PROBE TO BE OF ANY GREATER LENGTH THAN THE HIGH PROBE. HIGH PROBE TO BE SET 6 INCHES FROM THE VAULT FLOOR.

② INSTALL TWO WARRICK WIRE SUSPENDED PROBES CATALOG NUMBER 3W2 IN LEAK DETECTION INSPECTION PORT. SECURE PROBES UTILIZING A CROUSE-HINDES CATALOG NUMBER CGB393 FOR A 1 INCH NPT THREAD IN THE PORT FLANGE PROVIDED AND ONE AT THE VAULT TERMINAL BOX. TWO CONDUCTOR #14AWG CABLE TO BE FREE AIR IN VAULT FOR EASE OF ACCESS TO INSPECTION PORT. PRIOR TO ORDERING THE CGB FITTING VERIFY THE CABLE OUTSIDE DIAMETER FOR PROPER SIZING OF GLAND TYPE.

③ PROVIDE MOISTURE SEALS FOR ALL CONDUIT PENETRATIONS INTO WELL AND VALVE VAULTS.

④ ENCLOSURE TO CONTAIN MODULAR, DIN RAIL MOUNTED TERMINAL BLOCKS FOR TERMINATING ALL CONDUCTORS FROM THE WELL VAULT EQUIPMENT RACK.

COA PROJECT NO: 586082

MICHAEL TODD SMITH
NEW MEXICO
22680
PROFESSIONAL ENGINEER
5/31/2017

NO.	REVISION DESCRIPTION	DATE	BY
5			ADD
4			
3			
2			
1			

KIRTLAND AIR FORCE BASE BULK FUELS FACILITY
KAFB-106239 CONVEYANCE LINE
WELL VAULT SECTION

SMITH ENGINEERING COMPANY
2201 SAN PEDRO NE BLDG 4, SUITE 200
ALBUQUERQUE, NM 87110
EEA CONSULTING ENGINEERS

JOB NO: 116112
DATE: MAY 3, 2017
SHEET NO: E-301 24 of 27

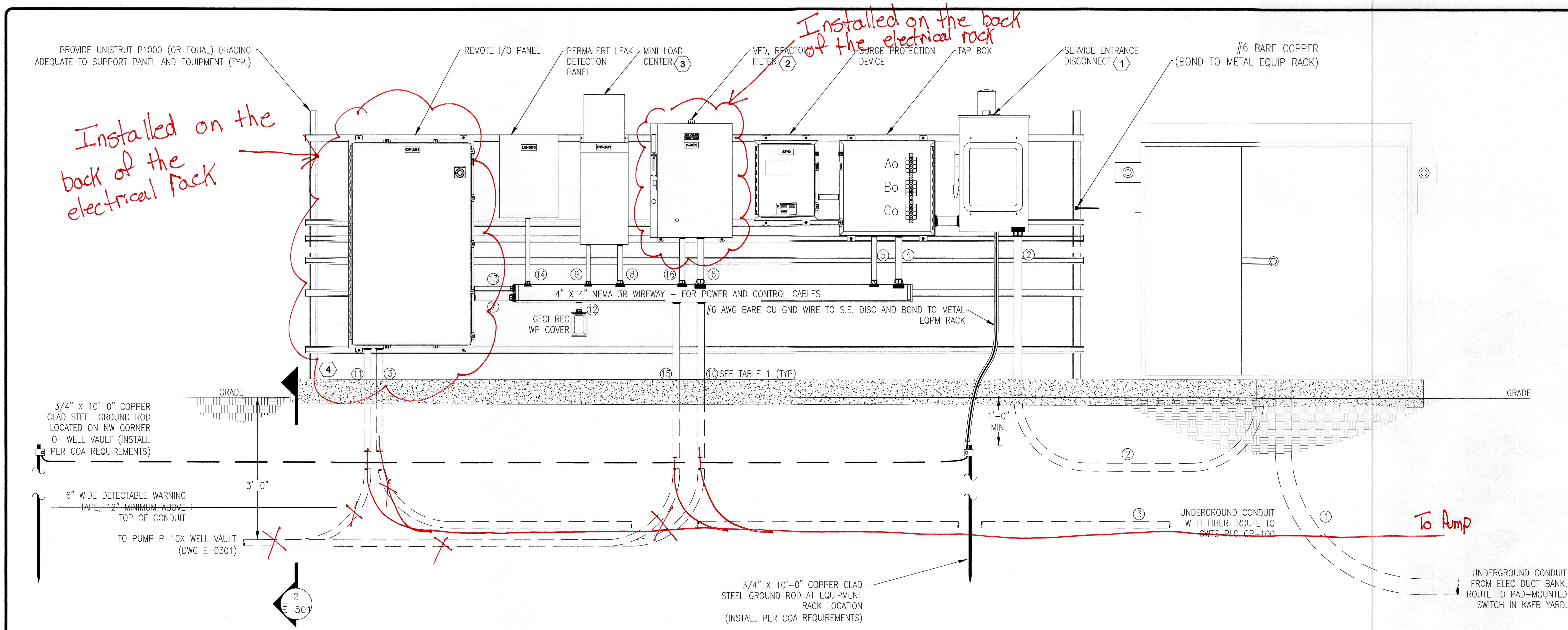

GENERAL NOTES:

A. SEE DRAWING E-000 FOR SYMBOLS & LEGENDS.

B. SEE DRAWING E-001 FOR GENERAL NOTES AND SPECIFICATIONS.

C. FENCING NOT SHOWN. SEE CIVIL, DRAWING C-401 FOR DETAILS.

D. ENCLOSURES TO INCLUDE LOCKING PROVISIONS.

KEYED NOTES:

1. PROVIDE AND INSTALL DISCONNECT. DISCONNECT TO BE A SERVICE ENTRANCE RATED SQUARE D CATALOG NUMBER H364NRB WITH LUG KIT CATALOG NUMBER AL20DTF OR APPROVED EQUAL. SEE ONE LINE DIAGRAM DRAWING E-601 FOR EQUIPMENT RATINGS.
2. SEE DRAWING E-701 FOR VARIABLE FREQUENCY DRIVE DETAILS. CONTRACTOR SHALL PROVIDE AND INSTALL ADDITIONAL COMPONENTS AND WIRING AS SHOWN ON DRAWING E-701.
3. CONTRACTOR TO PROVIDE AND INSTALL A MINI-POWER ZONE, SQUARE D CATALOG NUMBER MPZB3S40F OR APPROVED EQUAL. SEE DRAWING E-602 FOR PANEL SCHEDULE. ROUTE #6AWG GROUNDING ELECTRODE CONDUCTOR FROM MINI-POWER ZONE GROUND BUS TO SERVICE DISCONNECT GROUND BUS.
4. SEE DRAWING C-301, DETAIL 1 FOR CONCRETE EQUIPMENT PAD DETAILS.

TABLE 1

CONDUIT AND CIRCUIT ASSIGNMENT

1	4"C	3-1/C #2AWG, 15kV	9	1"C	12-1/C #12AWG, 6-1/C #12G
2	2"C	4-1/C #1/0AWG, #6G	10	1 1/4"C	3-1/C #4AWG, #8G
3	1"C	FIBER OPTIC CABLE	11	1 1/4"C	14-1/C #14AWG
4	1"C	3-1/C #4AWG, #8G	12	3/4"C	2-1/C #12AWG, #12G
5	1"C	2-1/C #8AWG, #10G	13	3/4"C	2-1/C #12AWG, #12G
6	1"C	3-1/C #4AWG, #8G	14	3/4"C	2-1/C #12AWG, #12G
7	1 1/4"C	14-1/C #14AWG, VFD CTRL	15	1"C	6-1/C #12, 3-1/C #12G
8	3/4"C	2-1/C #10AWG, 1-1/C #8G	16	3/4"C	VFD ETHERNET CABLE CONNECTION TO CONTROL PANEL

NOTE: USE RGS CONDUIT ABOVE GROUND AND IN WELL VAULT, AND PVC CONDUIT BELOW GRADE.

1 ELECTRICAL EQUIPMENT RACK ELEVATION
3/4" = 1'-0"

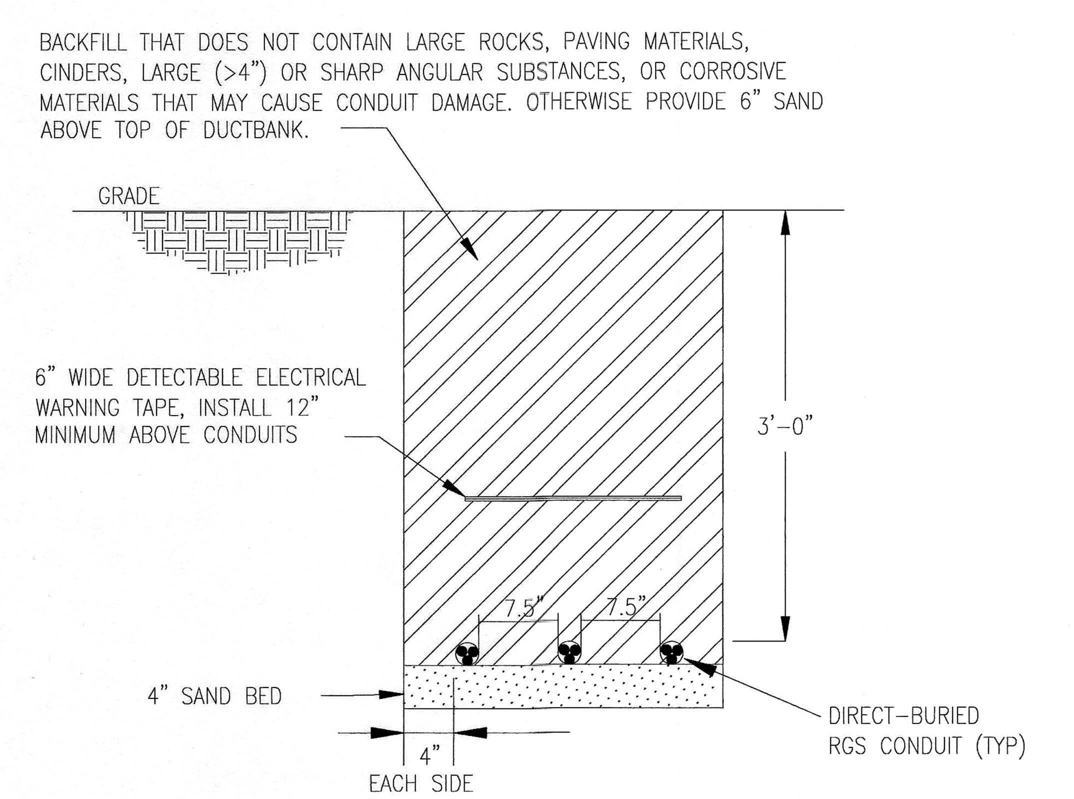

DISTANCES & CLEARANCES ARE MINIMUM REQUIREMENTS

2 DIRECT-BURY CONDUIT SECTION
NONE

COA PROJECT NO: 586082

MICHAEL TODD ... NEW MEXICO 22680 PROFESSIONAL ENGINEER 5/31/2017

NO.	REVISION DESCRIPTION	DATE	BY	ADD
1				
2				
3				
4				
5				

KIRTLAND AIR FORCE BASE BULK FUELS FACILITY
KAFB-106239 CONVEYANCE LINE

TRANSFORMER & EQUIPMENT RACK DETAIL

SMITH ENGINEERING COMPANY
2201 SAN PEDRO NE BLDG 4, SUITE 200
ALBUQUERQUE, NM 87110
EEA CONSULTING ENGINEERS

JOB NO: 116112
DATE: MAY 3, 2017
SHEET: E-501 NO: 25 of 27

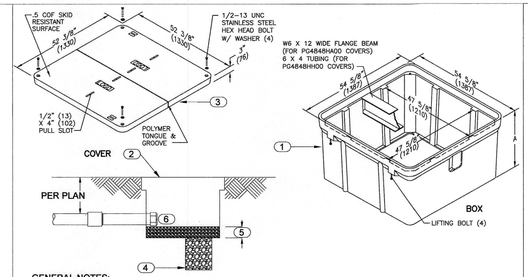

GENERAL NOTES:

1. PROVIDE IN GRADE PULL BOXES WERE SPECIFIED AND AS REQUIRED BY CODE AND SITE CONDITIONS.
2. CONTRACTOR TO FIELD DETERMINE REQUIRED DEPTH OF BOX.
3. PROVIDE TRAFFIC RATED BOX WHERE INSTALLED IN OR ADJACENT TO ROADWAYS.

KEYED NOTES:

1. PROVIDE FIBERGLASS-REINFORCED POLYMER CONCRETE BOX WITH BOLT-DOWN COVER. (HUBBELL QUAZITE P/N PG4848BA48 ANSI TIER 22)
2. INSTALL WITH LID FLUSH WITH FINISHED GRADE. WHERE INSTALLED IN PAVING, SHIM TO BRING FLUSH WITH PAVING AND GROUT AS REQUIRED TO REMOVE ANY LIP PER ADA REQUIREMENTS.
3. HEAVY DUTY SKID RESISTANT COVER. PROVIDE HIGH VOLTAGE WARNING LABEL "12470V DANGER, 'ALUMINUM CONDUCTORS', NO COPPER INSTALLED".
4. FOR ALL BOXES INSTALLED AT LOW POINTS AND IN FLAT AREAS SUBJECT TO WATER RETENTION, PROVIDE 12" DIA. X 12" D GRAVEL FILLED SUMP BELOW BOX
5. PROVIDE 4" LAYER OF PEA GRAVEL IN BOTTOM OF BOX.
6. STUB ALL CONDUITS 6" MIN INTO PULL BOX. PROVIDE BUSHING ON CONDUIT ENDS.

1 NTS

4 EXTERIOR GRADE MOUNTED PULL BOX

7

10 NTS

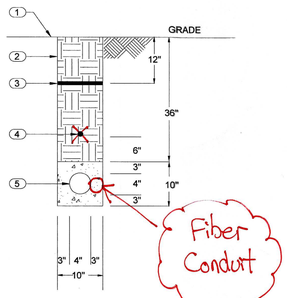

KEYED NOTES:

1. SAWCUT EXISTING PARKING LOTS AND STREETS. REPLACE ASPHALT TO MATCH EXISTING. IN GRASSY AREAS REPLACE GRASS TO MATCH.
2. BACKFILL WITH EXISTING (EXCAVATED) SOIL IN 6" LIFTS AND COMPACT 95%. REMOVE ROCKS LARGER THAN 3" DIAMETER.
3. CONTINUOUS 6" WIDE RED METALLIC DETECTION MARKER TAPE.
4. FIBER CONDUIT ~~AT 6" ABOVE DUCT BANK~~ Concrete Encased
5. CONCRETE ENCASED CONDUIT.

2 NTS

1 CONDUIT DUCTBANK SECTION

Conduits Were Not Concrete Encased within the HDD Bores

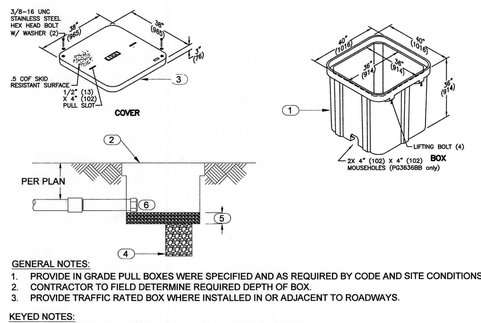

GENERAL NOTES:

1. PROVIDE IN GRADE PULL BOXES WERE SPECIFIED AND AS REQUIRED BY CODE AND SITE CONDITIONS.
2. CONTRACTOR TO FIELD DETERMINE REQUIRED DEPTH OF BOX.
3. PROVIDE TRAFFIC RATED BOX WHERE INSTALLED IN OR ADJACENT TO ROADWAYS.

KEYED NOTES:

1. PROVIDE FIBERGLASS-REINFORCED POLYMER CONCRETE BOX WITH BOLT-DOWN COVER. (HUBBELL QUAZITE P/N PG3636BA36 ANSI TIER 22)
2. INSTALL WITH LID FLUSH WITH FINISHED GRADE. WHERE INSTALLED IN PAVING, SHIM TO BRING FLUSH WITH PAVING AND GROUT AS REQUIRED TO REMOVE ANY LIP PER ADA REQUIREMENTS.
3. HEAVY DUTY SKID RESISTANT COVER. PROVIDE HIGH VOLTAGE WARNING LABEL "12470V DANGER, 'ALUMINUM CONDUCTORS', NO COPPER INSTALLED".
4. FOR ALL BOXES INSTALLED AT LOW POINTS AND IN FLAT AREAS SUBJECT TO WATER RETENTION, PROVIDE 12" DIA. X 12" D GRAVEL FILLED SUMP BELOW BOX
5. PROVIDE 4" LAYER OF PEA GRAVEL IN BOTTOM OF BOX.
6. STUB UP ALL CONDUITS 6" MIN INTO PULL BOX. PROVIDE BUSHING ON CONDUIT ENDS.

5 NTS

EXTERIOR GRADE MOUNTED PULL BOX

8 NTS

11 NTS

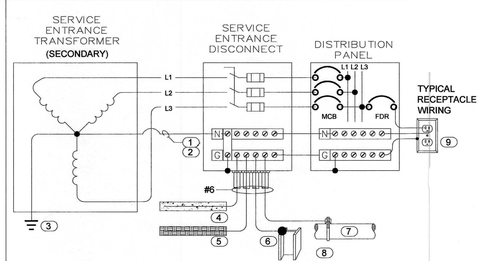

KEYED NOTES:

1. REFER TO ONE LINE AND PANEL SCHEDULES FOR CONDUCTOR SIZING NOT SHOWN ON GROUNDING SCHEMATIC.
2. UNO, ALL EQUIPMENT GROUNDING CONDUCTORS SHALL BE COPPER TYPE THHN/THWN.
3. TRANSFORMER GROUNDING PER NEC.
4. 20' OF BARE COPPER CONDUCTOR ENCASED IN 2" MIN. OF CONCRETE FOUNDATION IN DIRECT CONTACT WITH EARTH.
5. 20' OF BARE COPPER CONDUCTOR BURIED IN DIRECT CONTACT WITH EARTH AT 2' BELOW GRADE
6. CAD WELD CONNECTION TO BUILDING STEEL.
7. BONDING STRAP AT METAL COLD WATER AND GAS PIPING.
8. PROVIDE COPPER CLAD STEEL GROUND RODS AS REQUIRED TO ACHIEVE SPECIFIED GROUND RESISTANCE MEASURED AT THE SERVICE GROUND BUS. CAD-WELD TO BARE CU CABLE BURIED AT 24"
9. EQUIPMENT GROUNDING CONDUCTOR WITH ALL BRANCH CIRCUITS.

3 NTS

6 GROUNDING SCHEMATIC

9 NTS

12 NTS

COA PROJECT NO: 586082

CHRISTOPHER J. SMITH
NEW MEXICO
22680
PROFESSIONAL ENGINEER
5/31/2017

NO.	DESCRIPTION	DATE	BY
1	ADD		
2			
3			
4			
5			

KIRTLAND AIR FORCE BASE BULK FUELS FACILITY
KAFB-106239 CONVEYANCE LINE

DETAILS

SMITH ENGINEERING COMPANY
2201 SAN PEDRO NE BLDG 4, SUITE 200
ALBUQUERQUE, NM 87110
EEA CONSULTING ENGINEERS

JOB NO: 116112
DATE: MAY 3, 2017
SHEET NO: E-502 26 of 27

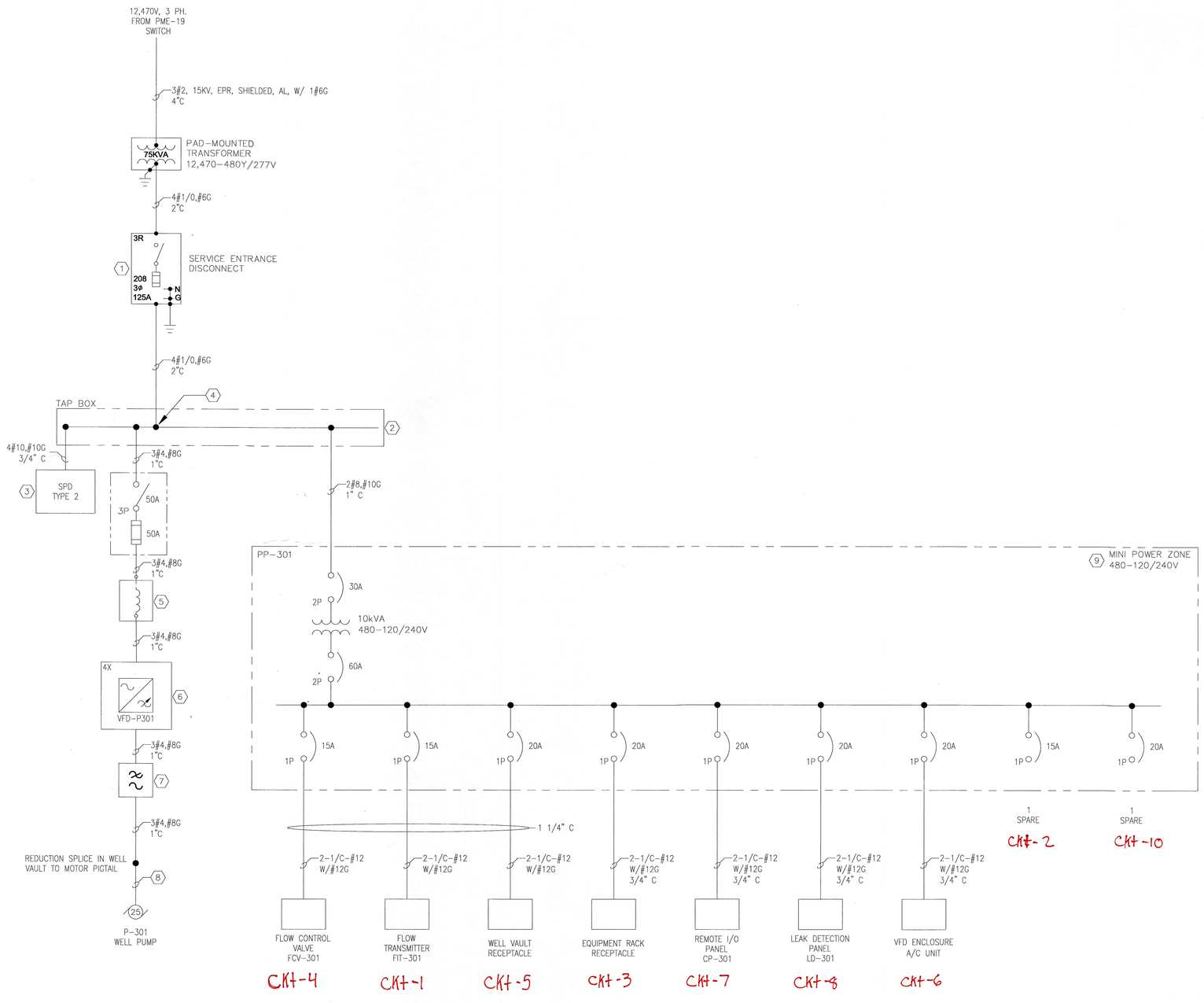

GENERAL NOTES:

A. SEE DRAWING E-000 AND E-001 FOR NOTES AND LEGENDS.

B. SEE DRAWING E-002 AND E-003 FOR ELECTRICAL SPECIFICATIONS.

C. SEE DRAWING E-501 FOR EQUIPMENT ARRANGEMENT AND CIRCUIT ASSIGNMENT.

KEYED NOTES:

1. DISCONNECT TO BE A SERVICE-ENTRANCE RATED, NEMA 3R, SQUARE D CAT # H364NRB OR APPROVED EQUAL.
2. TAP BOX TO BE A NEMA 3R HOFFMAN HINGE-COVER ENCLOSURE, CAT # A20R166HCR OR APPROVED EQUAL. FOR TAP BOX SEE DETAIL 1, DRAWING E-501.
3. TYPE 2 SURGE PROTECTION DEVICE (SPD) TO BE MCG SURGEFREE, CAT # 300LS-277Y-SS OR APPROVED EQUAL.
4. MULTI-TAP CONNECTOR IN TAP BOX TO BE PANDUIT, CAT # PCSBMT2/0-4-2Y OR APPROVED EQUAL.
5. ALLEN-BRADLEY LINE REACTOR, CAT # 1321-3R45-B OR APPROVED EQUAL.
6. PUMP VFD TO BE ALLEN-BRADLEY POWERFLEX 700 AC DRIVE SUPPLIED IN A NEMA 4X ENCLOSURE.
7. OUTPUT FILTER TO BE SCHAFFNER DV/DT FILTER, CAT # FN5060-45-99 OR APPROVED EQUAL.
8. MOTOR PIGTAIL CONDUCTORS FURNISHED BY VENDOR. FIELD SPLICE CONDUCTORS TO PUMP MOTOR CABLE UTILIZING IN-LINE SPLICE KIT WITH PVC HEAT SHRINK.
9. MINI POWER-ZONE UNIT SUBSTATION, CAT # MPZB10S40F25K OR APPROVED EQUAL.

COA PROJECT NO: 586082

REGISTERED
STEVEN MICHAEL HOOD
22680
PROFESSIONAL ENGINEER
5/31/2017

NO.	REVISION DESCRIPTION	DATE	BY
5			
4			
3			
2			
1			

KIRTLAND AIR FORCE BASE BULK FUELS FACILITY
KAFB-106239 CONVEYANCE LINE

ONE-LINE DIAGRAM

SMITH ENGINEERING COMPANY
2201 SAN PEDRO NE BLDG 4, SUITE 200
ALBUQUERQUE, NM 87110
EEA CONSULTING ENGINEERS

JOB NO: 116112
DATE: MAY 3, 2017
SHEET NO: E-601 27 of 27

EXTRACTION WELL CONSTRUCTION - KAFB-106239

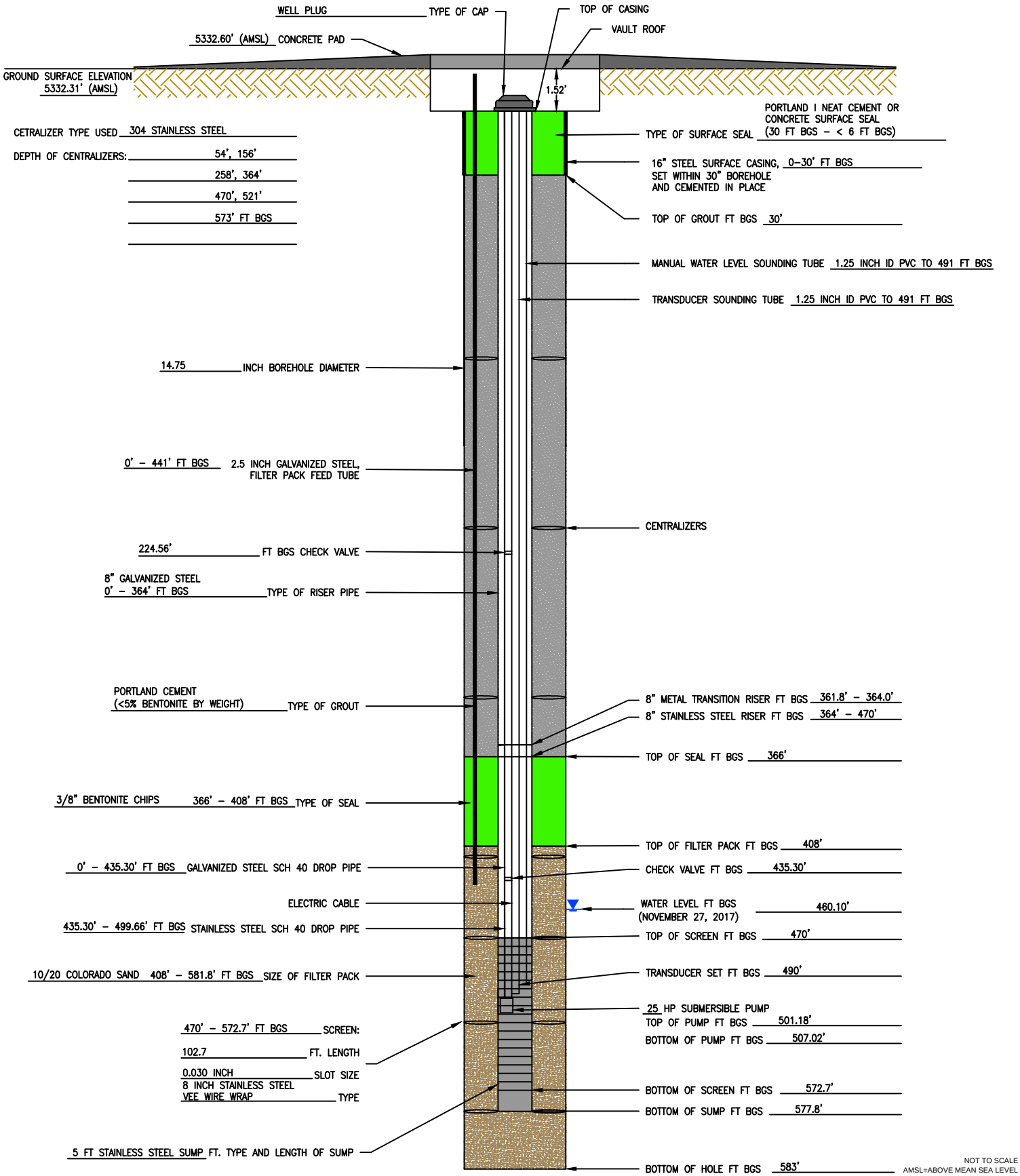

NOT TO SCALE
AMSL=ABOVE MEAN SEA LEVEL
BGS=BELOW GROUND SURFACE
FT-FEET

NOTE: ALL DEPTHS REFERENCE IN FEET BELOW GROUND SURFACE

EA ENGINEERING, SCIENCE, AND TECHNOLOGY, INC., PBC
320 Gold Avenue, SW Suite 1300
Albuquerque, NM 87102
Phone: (505) 224-9013

KIRTLAND AIR FORCE BASE		INSTALLATION START DATE/TIME: NOV 3, 16	INSTALLATION END DATE/TIME: DEC 9, 16
PROJECT NO.: 62599DM01	WELL ID: KAFB-106239 (EXTRACTION)	GEOLOGIST: R. MARLEY	DRILLER: YELLOW JACKET

FILE PATH: Y:\ACTIVE PROJECTS\62599DM01 KIRTLAND BFF_USACE\9.1 GWTS EXTRACTION WELLS\KAFB-106239 AUTOCAD\EXTRACTION WELL COMPLETION DIAGRAM-KAFB-106239.DWG [EXTRACTION WELL COMBINED FIGURE FINAL] MCKEAGE, KEVIN 5/3/2018 2:42 PM

NOTES

1. AS-BUILT SURVEY DATA COLLECTED NOVEMBER & DECEMBER 2017.

2. ELEVATIONS SHOWN ARE REFERENCED TO NAVD 88 VERTICAL DATUM.

3. STATION AND OFFSET SHOWN CORRESPONDS TO THE CONSTRUCTION CENTERLINE FOR THE KAFB-106239 CONVEYANCE LINE PROJECT. (COA PROJECT NO. 586082)

STATE PLANE COORDINATE VALUES
NAD 83 NM CENTRAL ZONE
NAVD 88 VERTICAL DATUM

PointNo.	Northing(Y)	Easting(X)	Elev(Z)	Description
5055	1475399.8159	1542745.2845	5329.5900	WL TOP OF PIPE
5056	1475335.6078	1542909.5085	5331.6100	WL TOP OF PIPE
5057	1475277.3876	1543058.8976	5333.4000	WL TOP OF PIPE
5058	1475238.9407	1543159.7732	5336.9900	WL TOP OF PIPE TEE
5059	1475171.2038	1543331.8646	5340.9500	WL TOP OF PIPE
5060	1475076.2562	1543576.8610	5345.1700	WL TOP OF PIPE
5061	1475066.1096	1543603.3620	5346.8600	WL TOP OF PIPE TEE
5062	1474984.8173	1543810.0216	5350.2500	WL TOP OF PIPE
5063	1474927.9967	1543961.2200	5352.5900	WL TOP OF PIPE
5064	1474891.6291	1544047.0108	5354.7500	WL TOP OF PIPE
5065	1474861.9792	1544128.3231	5354.5500	WL TOP OF PIPE
5066	1474808.9773	1544265.9462	5356.3900	WL TOP OF PIPE
5067	1474759.8940	1544394.0225	5356.7300	WL TOP OF PIPE
5068	1474719.3978	1544490.8595	5358.6900	WL TOP OF PIPE TEE
5069	1474705.6925	1544528.7166	5357.2800	WL TOP OF PIPE END
5070	1474702.2337	1544543.0317	5357.2300	WL TOP OF PIPE
5506	1474719.8976	1544490.9095	5357.9800	WL TOP OF PIPE TEE
5507	1474700.0844	1544537.6735	5357.9000	WL TOP OF PIPE 45 DEGREE BEND
5508	1474731.3337	1544598.1729	5358.0100	WL TOP OF PIPE 45 DEGREE BEND
5509	1474730.2441	1544602.0116	5359.1100	WL TOP OF PIPE TEE
5510	1474665.6161	1544772.3136	5359.8000	WL TOP OF PIPE
5511	1474611.8045	1544908.8270	5362.4900	WL TOP OF PIPE TEE
5512	1474597.1295	1545032.7048	5363.4200	WL TOP OF PIPE JUNCTION BOX WYE
9000	1475407.6532	1542712.3757	5333.3500	CONC VAULT CORNER
9001	1475414.3809	1542715.1348	5333.3800	CONC VAULT CORNER
9002	1475420.1090	1542700.9596	5333.3600	CONC VAULT CORNER
9003	1475413.2513	1542698.3105	5333.3400	CONC VAULT CORNER
9004	1475010.0587	1543734.0575	5352.2700	ELECTRIC BOX
9005	1474697.9151	1544536.0441	5361.8900	ELECTRIC BOX
9006	1474733.1331	1544600.2322	5362.2100	ELECTRIC BOX
9007	1475350.0129	1542864.0040	5334.7200	ELECTRIC BOX
9008	1474589.4221	1545029.5459	5367.7000	ELECTRIC BOX
9009	1474593.3508	1545029.4859	5368.0200	CONC VAULT CORNER
9010	1474598.4290	1545028.0064	5368.0600	CONC VAULT CORNER
9011	1474599.8786	1545032.9947	5367.9700	CONC VAULT CORNER
9012	1474594.8703	1545034.5242	5367.9600	CONC VAULT CORNER

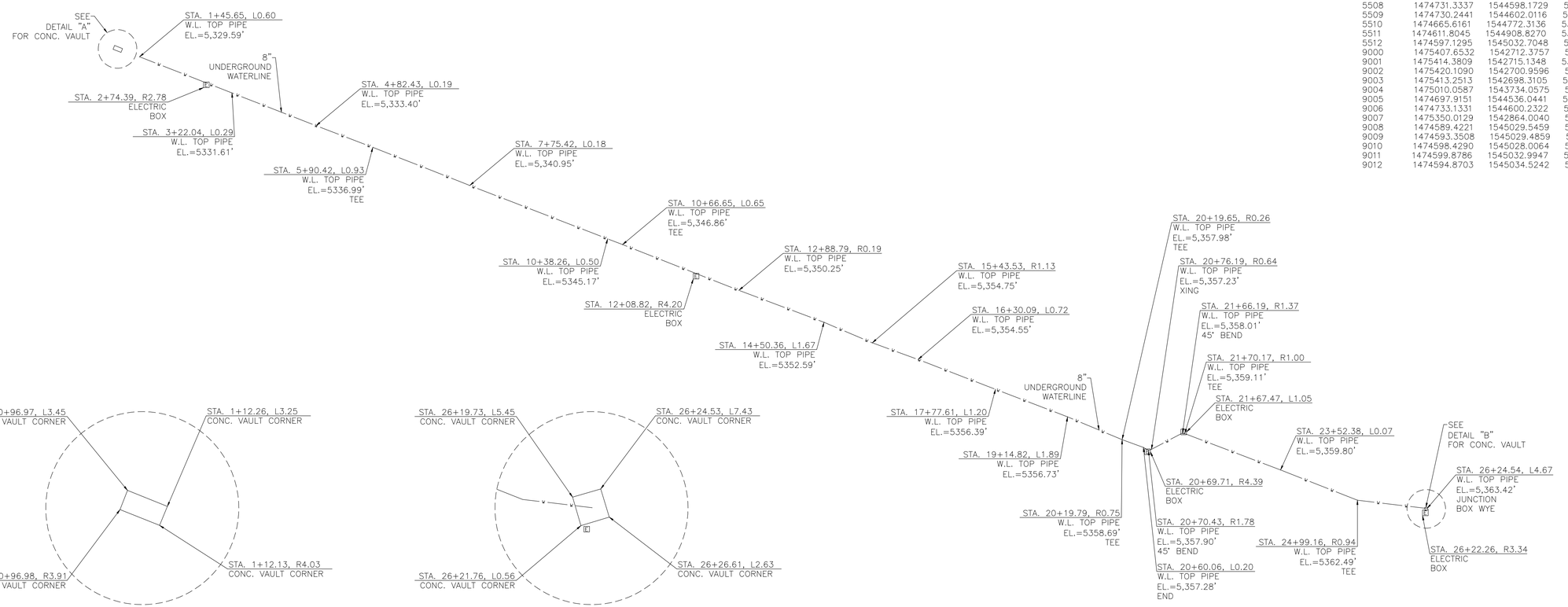

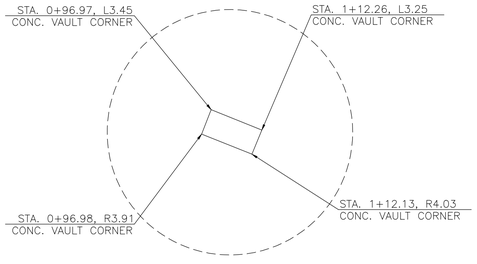

DETAIL "A"
N.T.S

DETAIL "B"
N.T.S

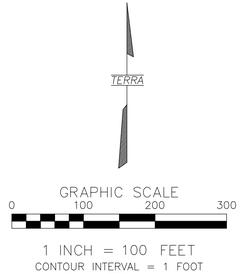

1 INCH = 100 FEET
CONTOUR INTERVAL = 1 FOOT
NAVD 88 VERTICAL DATUM

SURVEYOR'S CERTIFICATE

I, CHRISTOPHER A. MEDINA, N.M.P.L.S. NO. 15702, DO HEREBY CERTIFY THAT THE AS-BUILT INFORMATION SHOWN AND THE ACTUAL SURVEY WHICH IT WAS DERIVED FROM WAS PERFORMED BY ME OR UNDER MY DIRECT SUPERVISION AND THAT THE INFORMATION SHOWN IS TRUE AND CORRECT TO THE BEST OF MY KNOWLEDGE AND BELIEF.

CHRISTOPHER A. MEDINA, NMPLS NO. 15702

DEC. 19, 2017
DATE

CHRISTOPHER A. MEDINA NEW MEXICO 15702 REGISTERED PROFESSIONAL SURVEYOR

AS-BUILT SURVEY

KAFB CONVEYANCE WATERLINE

ALBUQUERQUE, NEW MEXICO

TERRA LAND SURVEYS, LLC

P.O. BOX 2532 • CORRALES, NM 87048 • (505) 792-0513

DRAWN BY: PHF	PROJECT NO.: 2017-104	
CHECKED BY: CAM	DATE: DECEMBER 2017	SHEET 1 OF 1

HIGH MESA Consulting Group
Engineers, Surveyors & Subsurface Utility Consultants

2016.030.7

January 26, 2018

EA Engineering, Science, and Technology, Inc., PBC
c/o: Devon E. Jercinovic, PG, PMP
Program Manager II
320 Gold Ave. SW, Suite 1300
Albuquerque, NM 87102

Re: Utility Survey – Ridgecrest Portion of GEP Corridor from Extraction Well KAFB-106239 to Mid Plume Pump and Treat Facility

Dear Devon:

Transmitted herewith are 3 color copies of the subject survey for your use. This information is also being transmitted digitally via Sharefile in PDF and ACAD formats to you. This concludes our surveying efforts for this aspect of the project. If you have questions regarding this information, or if we can be of further service to you, please do not hesitate to call. Thank you for providing this opportunity to our firm.

Sincerely,

HIGH MESA CONSULTING GROUP

Joseph M. Solomon, Jr., P.S.
Principal

JMS
Enclosures

VICINITY MAP M-18
SCALE: 1"=750'

DESCRIPTION

THE PUBLIC RIGHT-OF-WAY OF RIDGECREST DRIVE S.E. BETWEEN RIDGECREST LOOP S.E. AND LOUISIANA BOULEVARD S.E., ALBUQUERQUE, NEW MEXICO.

GENERAL NOTES

1. THIS UNCLASSIFIED SURVEY IS A UTILITY AS-CONSTRUCTED SURVEY BASED UPON THE TOPOGRAPHIC AND UTILITY SURVEY THAT WAS PERFORMED IN OCTOBER, 2016 (SCREENED). THIS IS NOT A BOUNDARY SURVEY, PROPERTY INFORMATION IS SHOWN FOR ORIENTATION ONLY. THE SCREENED BOUNDARY DATA SHOWN IS BASED UPON A PRELIMINARY PROPERTY INVESTIGATION PREPARED BY THIS FIRM DATED AUGUST, 2016.
2. ALL DISTANCES ARE GROUND DISTANCES.
3. SITE LOCATED WITHIN SECTION 36, TOWNSHIP 10 NORTH, RANGE 3 EAST, N.M.P.M.
4. UTILITY INFORMATION SHOWN HEREON IS BASED UPON ONSITE SURFACE EVIDENCE, REVIEW OF AVAILABLE CITY OF ALBUQUERQUE DISTRIBUTION MAPS, REVIEW OF PNM, NEW MEXICO GAS COMPANY AND CENTURYLINK AVAILABLE DOCUMENTS AND UTILITY LINE-SPOTS PROVIDED BY HIGH MESA CONSULTING GROUP (2016.030.2-SITE UTILITY DIAGRAM DATED 10-11-2016). IN ADDITION, UTILITY LINE-SPOTS WERE REQUESTED VIA THE NEW MEXICO ONE CALL SERVICE (TICKET # 16SE280041). UTILITY LINES SHOWN ON THIS DRAWING ARE SHOWN IN AN APPROXIMATE MANNER ONLY AND SUCH LINES MAY EXIST WHERE NONE ARE SHOWN. IF ANY SUCH EXISTING LINES ARE SHOWN, THE LOCATION IS BASED UPON INFORMATION PROVIDED BY THE OWNER OF SAID UTILITY, AND THE INFORMATION MAY BE INCOMPLETE, OR MAY BE OBSOLETE BY THE TIME CONSTRUCTION COMMENCES. THE SURVEYOR HAS CONDUCTED ONLY PRELIMINARY INVESTIGATION OF THE LOCATION, DEPTH, SIZE, OR TYPE OF EXISTING UTILITY LINES, PIPELINES, OR UNDERGROUND UTILITY LINES. THIS INVESTIGATION IS NOT CONCLUSIVE, AND MAY NOT BE COMPLETE, THEREFORE, MAKES NO REPRESENTATION PERTAINING THERETO, AND ASSUMES NO RESPONSIBILITY OR LIABILITY THEREFOR. THE PROPERTY OWNER, DEVELOPER, OR CONTRACTOR SHALL INFORM ITSELF OF THE LOCATION OF ANY UTILITY LINE, PIPELINE, OR UNDERGROUND UTILITY LINE IN OR NEAR THE AREA OF THE WORK IN ADVANCE OF AND DURING EXCAVATION WORK. THE PROPERTY OWNER, DEVELOPER, OR CONTRACTOR IS FULLY RESPONSIBLE FOR ANY AND ALL DAMAGE CAUSED BY ITS FAILURE TO LOCATE, IDENTIFY AND PRESERVE ANY AND ALL EXISTING UTILITIES, PIPELINES, AND UNDERGROUND UTILITY LINES. IN PLANNING AND CONDUCTING EXCAVATION, THE CONTRACTOR SHALL COMPLY WITH STATE STATUTES, MUNICIPAL AND LOCAL ORDINANCES, RULES AND REGULATIONS, IF ANY, PERTAINING TO THE LOCATION OF THESE LINES AND FACILITIES.

CONTROL SURVEY NOTE

A CONTROL SURVEY WAS CONDUCTED AT THE SITE ON JULY 13, 2016 AND VERIFIED ON OCTOBER 03, 2016. CONTROL WAS PROJECTED ONTO THE SUBJECT SITE UTILIZING RTK GPS OBSERVATIONS COMBINED WITH NGS COAJUL08 MODEL TO ESTABLISH HORIZONTAL AND VERTICAL POSITIONS BASED UPON NAD83/NAVD 88 DATUM. THE RTK OBSERVATIONS WERE USED TO ESTABLISH THE ELEVATIONS FOR THE CONTROL POINTS AND BENCHMARKS AT THE PROJECT SITE.

THE POINTS OBSERVED HAVE BEEN QUALITY CONTROLLED FOR RELATIVE ACCURACY. ALL HORIZONTAL COORDINATES ARE MODIFIED NAD 83 GRID VALUES AND HAVE BEEN ADJUSTED TO THE GROUND AT THE PROJECTION POINT (THE SCALE FACTOR USED IS 1/CF=1.00034087). THE PROJECTION POINT USED FOR THIS PROJECT IS A.G.R.S. "1-M18" WITH NAD 83 GRID COORDINATES OF:
NORTHING= 1,475,270.293
EASTING= 1,543,374.499
ELLIPSOID HEIGHT= 5271.00 FEET.
THE ELEVATIONS ARE BASED UPON THE NAVD 88 DATUM AND REQUIRE NO FURTHER ADJUSTMENT.

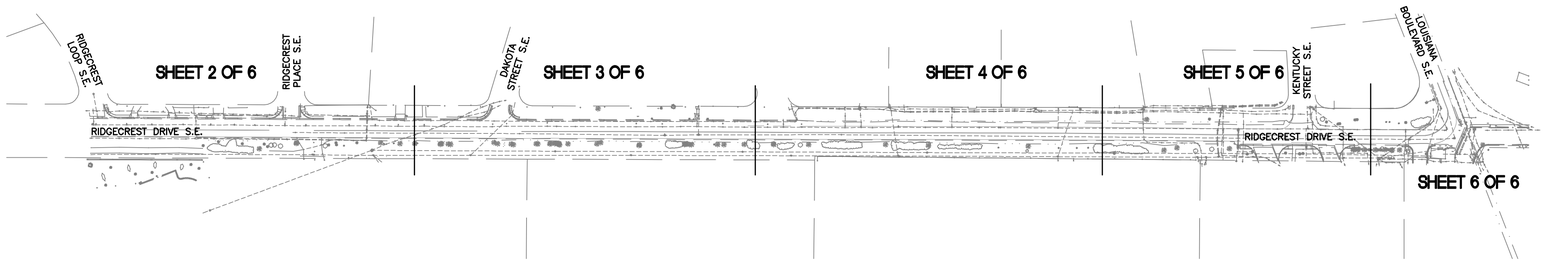

SHEET KEY MAP
NOT TO SCALE

BENCHMARKS

PROJECT BENCHMARK
A NMSHC BRASS DISK STAMPED "STA. G-2" SET IN TOP OF CONCRETE POST FLUSH WITH THE GROUND, IN THE WESTERN MEDIAN, NEAR THE INTERSECTION OF GIBSON BOULEVARD S.E. AND LOUISIANA BOULEVARD S.E.
ELEVATION = 5337.43 FEET (NAVD 1988)

TEMPORARY BENCHMARK #1 (T.B.M.)
A MAG NAIL W/WASHER SET IN ASPHALT ON THE SOUTH SIDE OF RIDGECREST DRIVE S.E., AS SHOWN ON SHEET 2.
ELEVATION = 5332.77 FEET (NAVD 1988)

TEMPORARY BENCHMARK #2 (T.B.M.)
A MAG NAIL W/WASHER SET IN CONCRETE NEAR THE SOUTHWEST QUADRANT OF THE INTERSECTION OF RIDGECREST DRIVE S.E. AND DAKOTA STREET S.E., AS SHOWN ON SHEET 3.
ELEVATION = 5340.94 FEET (NAVD 1988)

TEMPORARY BENCHMARK #3 (T.B.M.)
A MAG NAIL W/WASHER SET IN TOP OF CONCRETE CURB ON THE NORTH SIDE OF RIDGECREST DRIVE S.E., AS SHOWN ON SHEET 4.
ELEVATION = 5353.72 FEET (NAVD 1988)

TEMPORARY BENCHMARK #4 (T.B.M.)
A MAG NAIL W/WASHER SET IN ASPHALT NEAR THE SOUTHEAST QUADRANT OF THE INTERSECTION OF RIDGECREST DRIVE S.E. AND LOUISIANA BOULEVARD S.E., AS SHOWN ON SHEET 6.
ELEVATION = 5364.68 FEET (NAVD 1988)

SURVEYORS CERTIFICATION

I, JOSEPH M. SOLOMON, JR., NEW MEXICO PROFESSIONAL SURVEYOR NO. 15075, DO HEREBY CERTIFY; THAT THIS UTILITY AS-CONSTRUCTED SURVEY AND THE ACTUAL SURVEY ON THE GROUND UPON WHICH IT IS BASED WERE PERFORMED BY ME OR UNDER MY DIRECT SUPERVISION; THAT THE SURVEY SHOWS ALL EASEMENTS MADE KNOWN TO ME BY THIS OWNER, UTILITY COMPANIES, OR OTHER PARTIES EXPRESSING AN INTEREST; THAT THIS SURVEY MEETS THE MINIMUM STANDARDS FOR SURVEYING IN NEW MEXICO, AND THAT IT IS TRUE AND CORRECT TO THE BEST OF MY KNOWLEDGE AND BELIEF.

JOSEPH M. SOLOMON, JR., NMPS 15075

JOSEPH M. SOLOMON, JR. NEW MEXICO 15075 REGISTERED PROFESSIONAL SURVEYOR

January 26, 2018
DATE

HIGH MESA Consulting Group
6010-B MIDWAY PARK BLVD. NE • ALBUQUERQUE, NEW MEXICO 87109
PHONE: 505.345.4250 • FAX: 505.345.4254 • www.highmesacg.com

COVER SHEET

EA ENGINEERING - KAFB BFF - RIDGECREST DRIVE GEP CORRIDOR

SURVEYED BY M.V.Z.
DRAWN BY T.N.T.
APPROVED BY J.M.S.

NO.	DATE	BY	REVISIONS

JOB NO. 2016.030.7
DATE 01-2018
SHEET 1 OF 6

File Path: P:\DATA\2016\2016.030.7\SWK\ | Plot Date: 01-26-2018
File Name: 160307_UTIL1.DWG | Plot Time: 10:07 am

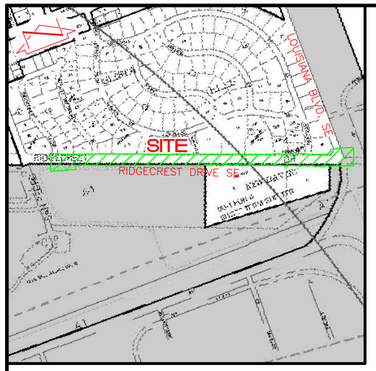

VICINITY MAP M-18
SCALE: 1"=750'

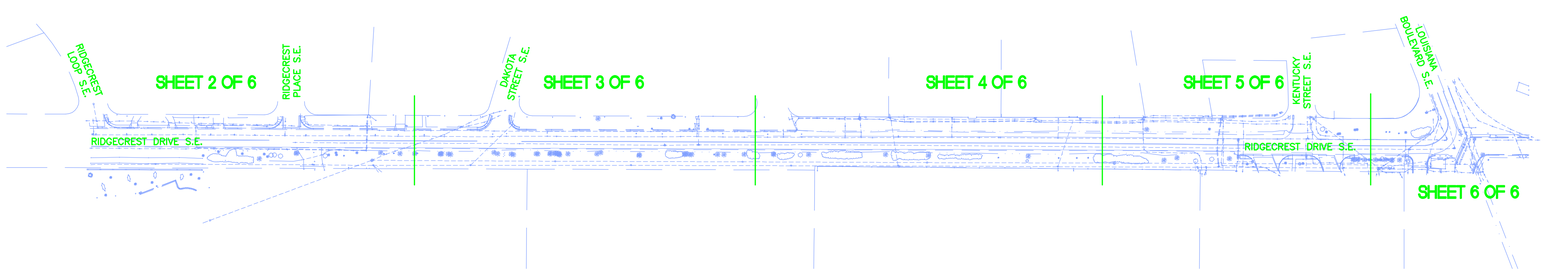

SHEET KEY MAP

NOT TO SCALE

DESCRIPTION

THE PUBLIC RIGHT-OF-WAY OF RIDGECREST DRIVE S.E. BETWEEN RIDGECREST LOOP S.E. AND LOUISIANA BOULEVARD S.E., ALBUQUERQUE, NEW MEXICO.

GENERAL NOTES

1. THIS UNCLASSIFIED SURVEY IS A UTILITY AS-CONSTRUCTED SURVEY BASED UPON THE TOPOGRAPHIC AND UTILITY SURVEY THAT WAS PERFORMED IN OCTOBER, 2016 (SCREENED). THIS IS NOT A BOUNDARY SURVEY, PROPERTY INFORMATION IS SHOWN FOR ORIENTATION ONLY. THE SCREENED BOUNDARY DATA SHOWN IS BASED UPON A PRELIMINARY PROPERTY INVESTIGATION PREPARED BY THIS FIRM DATED AUGUST, 2016.
2. ALL DISTANCES ARE GROUND DISTANCES.
3. SITE LOCATED WITHIN SECTION 36, TOWNSHIP 10 NORTH, RANGE 3 EAST, N.M.P.M.
4. UTILITY INFORMATION SHOWN HEREON IS BASED UPON ONSITE SURFACE EVIDENCE, REVIEW OF AVAILABLE CITY OF ALBUQUERQUE DISTRIBUTION MAPS, REVIEW OF PNM, NEW MEXICO GAS COMPANY AND CENTURYLINK AVAILABLE DOCUMENTS AND UTILITY LINE-SPOTS PROVIDED BY HIGH MESA CONSULTING GROUP (2016.030.2-SITE UTILITY DIAGRAM DATED 10-11-2016). IN ADDITION, UTILITY LINE-SPOTS WERE REQUESTED VIA THE NEW MEXICO ONE CALL SERVICE (TICKET # 16SE280041). UTILITY LINES SHOWN ON THIS DRAWING ARE SHOWN IN AN APPROXIMATE MANNER ONLY AND SUCH LINES MAY EXIST WHERE NONE ARE SHOWN. IF ANY SUCH EXISTING LINES ARE SHOWN, THE LOCATION IS BASED UPON INFORMATION PROVIDED BY THE OWNER OF SAID UTILITY, AND THE INFORMATION MAY BE INCOMPLETE, OR MAY BE OBSOLETE BY THE TIME CONSTRUCTION COMMENCES. THE SURVEYOR HAS CONDUCTED ONLY PRELIMINARY INVESTIGATION OF THE LOCATION, DEPTH, SIZE, OR TYPE OF EXISTING UTILITY LINES, PIPELINES, OR UNDERGROUND UTILITY LINES. THIS INVESTIGATION IS NOT CONCLUSIVE, AND MAY NOT BE COMPLETE, THEREFORE, MAKES NO REPRESENTATION PERTAINING THERETO, AND ASSUMES NO RESPONSIBILITY OR LIABILITY THEREFOR. THE PROPERTY OWNER, DEVELOPER, OR CONTRACTOR SHALL INFORM ITSELF OF THE LOCATION OF ANY UTILITY LINE, PIPELINE, OR UNDERGROUND UTILITY LINE IN OR NEAR THE AREA OF THE WORK IN ADVANCE OF AND DURING EXCAVATION WORK. THE PROPERTY OWNER, DEVELOPER, OR CONTRACTOR IS FULLY RESPONSIBLE FOR ANY AND ALL DAMAGE CAUSED BY ITS FAILURE TO LOCATE, IDENTIFY AND PRESERVE ANY AND ALL EXISTING UTILITIES, PIPELINES, AND UNDERGROUND UTILITY LINES. IN PLANNING AND CONDUCTING EXCAVATION, THE CONTRACTOR SHALL COMPLY WITH STATE STATUTES, MUNICIPAL AND LOCAL ORDINANCES, RULES AND REGULATIONS, IF ANY, PERTAINING TO THE LOCATION OF THESE LINES AND FACILITIES.

CONTROL SURVEY NOTE

A CONTROL SURVEY WAS CONDUCTED AT THE SITE ON JULY 13, 2016 AND VERIFIED ON OCTOBER 03, 2016. CONTROL WAS PROJECTED ONTO THE SUBJECT SITE UTILIZING RTK GPS OBSERVATIONS COMBINED WITH NGS COAJUL08 MODEL TO ESTABLISH HORIZONTAL AND VERTICAL POSITIONS BASED UPON NAD83/NAVD 88 DATUM. THE RTK OBSERVATIONS WERE USED TO ESTABLISH THE ELEVATIONS FOR THE CONTROL POINTS AND BENCHMARKS AT THE PROJECT SITE.

THE POINTS OBSERVED HAVE BEEN QUALITY CONTROLLED FOR RELATIVE ACCURACY. ALL HORIZONTAL COORDINATES ARE MODIFIED NAD 83 GRID VALUES AND HAVE BEEN ADJUSTED TO THE GROUND AT THE PROJECTION POINT (THE SCALE FACTOR USED IS 1/CF=1.00034087). THE PROJECTION POINT USED FOR THIS PROJECT IS A.G.R.S. "1-M18" WITH NAD 83 GRID COORDINATES OF:
NORTHING= 1,475,270.293
EASTING= 1,543,374.499
ELLIPSOID HEIGHT= 5271.00 FEET.
THE ELEVATIONS ARE BASED UPON THE NAVD 88 DATUM AND REQUIRE NO FURTHER ADJUSTMENT.

BENCHMARKS

PROJECT BENCHMARK

A NMSHC BRASS DISK STAMPED "STA. G-2" SET IN TOP OF CONCRETE POST FLUSH WITH THE GROUND, IN THE WESTERN MEDIAN, NEAR THE INTERSECTION OF GIBSON BOULEVARD S.E. AND LOUISIANA BOULEVARD S.E.
ELEVATION = 5337.43 FEET (NAVD 1988)

TEMPORARY BENCHMARK #1 (T.B.M.)

A MAG NAIL W/WASHER SET IN ASPHALT ON THE SOUTH SIDE OF RIDGECREST DRIVE S.E., AS SHOWN ON SHEET 2.
ELEVATION = 5332.77 FEET (NAVD 1988)

TEMPORARY BENCHMARK #2 (T.B.M.)

A MAG NAIL W/WASHER SET IN CONCRETE NEAR THE SOUTHWEST QUADRANT OF THE INTERSECTION OF RIDGECREST DRIVE S.E. AND DAKOTA STREET S.E., AS SHOWN ON SHEET 3.
ELEVATION = 5340.94 FEET (NAVD 1988)

TEMPORARY BENCHMARK #3 (T.B.M.)

A MAG NAIL W/WASHER SET IN TOP OF CONCRETE CURB ON THE NORTH SIDE OF RIDGECREST DRIVE S.E., AS SHOWN ON SHEET 4.
ELEVATION = 5353.72 FEET (NAVD 1988)

TEMPORARY BENCHMARK #4 (T.B.M.)

A MAG NAIL W/WASHER SET IN ASPHALT NEAR THE SOUTHEAST QUADRANT OF THE INTERSECTION OF RIDGECREST DRIVE S.E. AND LOUISIANA BOULEVARD S.E., AS SHOWN ON SHEET 6.
ELEVATION = 5364.68 FEET (NAVD 1988)

SURVEYORS CERTIFICATION

I, JOSEPH M. SOLOMON, JR., NEW MEXICO PROFESSIONAL SURVEYOR NO. 15075, DO HEREBY CERTIFY; THAT THIS UTILITY AS-CONSTRUCTED SURVEY AND THE ACTUAL SURVEY ON THE GROUND UPON WHICH IT IS BASED WERE PERFORMED BY ME OR UNDER MY DIRECT SUPERVISION; THAT THE SURVEY SHOWS ALL EASEMENTS MADE KNOWN TO ME BY THIS OWNER, UTILITY COMPANIES, OR OTHER PARTIES EXPRESSING AN INTEREST; THAT THIS SURVEY MEETS THE MINIMUM STANDARDS FOR SURVEYING IN NEW MEXICO, AND THAT IT IS TRUE AND CORRECT TO THE BEST OF MY KNOWLEDGE AND BELIEF.

JOSEPH M. SOLOMON, JR., NMPS 15075 — DATE: January 26, 2018

JOSEPH M. SOLOMON, JR. NEW MEXICO 15075 REGISTERED PROFESSIONAL SURVEYOR

File Path: P:\DATA\2016\2016.030.7\SWR\ | Plot Date: 01-26-2018
File Name: 160307_UTIL1.DWG | Plot Time: 10:07 am

HIGH MESA Consulting Group
6010-B MIDWAY PARK BLVD. NE • ALBUQUERQUE, NEW MEXICO 87109
PHONE: 505.345.4250 • FAX: 505.345.4254 • www.highmesacg.com

COVER SHEET

EA ENGINEERING - KAFB BFF - RIDGECREST DRIVE GEP CORRIDOR

SURVEYED BY M.V.Z.
DRAWN BY T.N.T.
APPROVED BY J.M.S.

NO.	DATE	BY	REVISIONS

JOB NO. 2016.030.7
DATE 01-2018
SHEET 1 OF 6

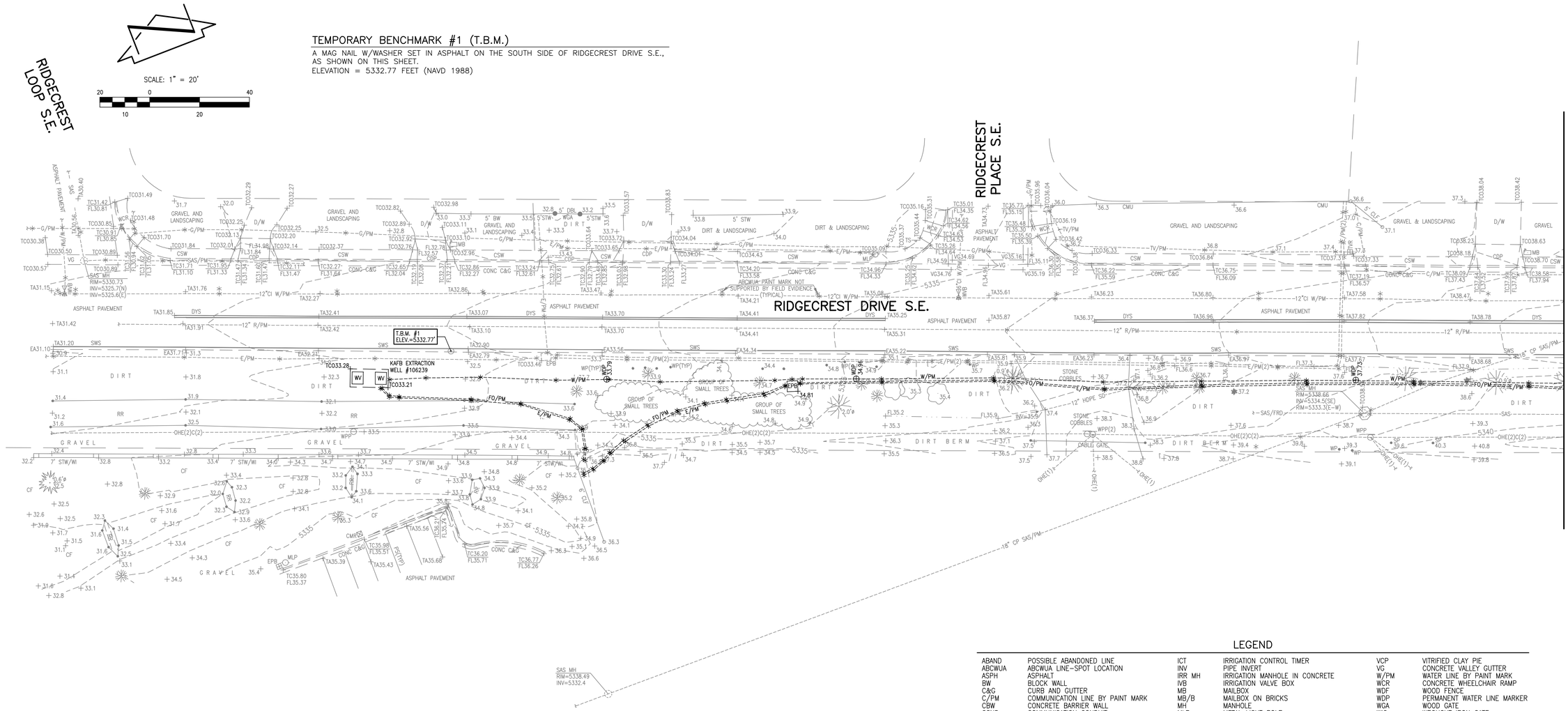

LEGEND

ABAND	POSSIBLE ABANDONED LINE	ICT	IRRIGATION CONTROL TIMER	VCP	VITRIFIED CLAY PIE
ABCWUA	ABCWUA LINE-SPOT LOCATION	INV	PIPE INVERT	VG	CONCRETE VALLEY GUTTER
ASPH	ASPHALT	IRR MH	IRRIGATION MANHOLE IN CONCRETE	W/PM	WATER LINE BY PAINT MARK
BW	BLOCK WALL	IVB	IRRIGATION VALVE BOX	WCR	CONCRETE WHEELCHAIR RAMP
C&G	CURB AND GUTTER	MB	MAILBOX	WDF	WOOD FENCE
C/PM	COMMUNICATION LINE BY PAINT MARK	MB/B	MAILBOX ON BRICKS	WDP	PERMANENT WATER LINE MARKER
CBW	CONCRETE BARRIER WALL	MH	MANHOLE	WGA	WOOD GATE
CCND	COMMUNICATION CONDUIT	MLP	METAL LIGHT POLE	WIG	WROUGHT IRON GATE
CDP	CONCRETE DRIVE PAD	MSN	METAL SIGN (GENERAL)	WL	WATER LINE (NOT SPOTTED)
CF	LANDSCAPING CRUSHER FINES	MTC	METAL TRASH CAN	WLP	WOOD LIGHT POLE
CHC	CONCRETE HEADER CURB	OHC(2)	OVERHEAD COMMUNICATION (# OF LINES)	WMB	WATER METER BOX
CI	CAST IRON PIPE	OHE(2)	OVERHEAD ELECTRIC (# OF LINES)	WP	WOOD POST
CLF	CHAIN LINK FENCE	PBAR	PIPE BARRIER	WPP	WOOD POWER POLE
CLF/BW	CHAIN LINK FENCE WITH BARBED WIRE	PIV	POST INDICATOR VALVE	WRF	4-STRAND SMOOTH WIRE FENCE
CMR	COMMUNICATION RISER	PS	PAINTED PARKING STRIPE	WV	WATER VAULT
CMU	CONCRETE MASONRY UNIT WALL	PVC	POLYVINYL CHLORIDE PIPE	WVB	WATER VALVE BOX
CND	ELECTRIC CONDUIT	R/PM	REUSE WATER LINE BY PAINT MARK		
CONC	CONCRETE	RCP	REINFORCED CONCRETE PIPE	*	PAINTED UTILITY MARK
CP	CONCRETE PIPE	RR	LANDSCAPING RIVER ROCK (DRAINAGE)	*	PAINTED ABCWUA UTILITY MARK
CPB	COMMUNICATION PULLBOX	RRT	LANDSCAPING RAILROAD TIES	ø	TREE TRUNK DIAMETER
CSW	CONCRETE SIDEWALK	RWV	REUSE WATER VAULT		CONIFEROUS TREE
D/W	CONCRETE DRIVEWAY	SAS	SANITARY SEWER		DECIDUOUS TREE
DBL	DOUBLE	SAS/PM	SANITARY SEWER PIPE BY PAINT MARK		SMALL DECIDUOUS TREE
DPG	DOUBLE PIPE GATE	SD	STORM DRAIN		GROUP OF SMALL TREES
DWS	PAINTED DASHED WHITE TRAFFIC STRIPE	SD/PM	STORM DRAIN PIPE BY PAINT MARK		SHRUB
DYS	PAINTED DOUBLE YELLOW TRAFFIC STRIPE	SDI	STORM DRAIN INLET		TREE STUMP
E/PM	ELECTRIC LINE BY PAINT MARK	SDP	SERVICE DROP POLE		
EA	EDGE OF ASPHALT	SGP	STEEL GUARD POST		
EPB	ELECTRIC PULLBOX	SP	STEEL POST		
FH	FIRE HYDRANT	SSG	SLIDING STEEL GATE		
FL	FLOWLINE	STW	STUCCO WALL		
FO/PM	FIBER OPTIC LINE BY PAINT MARK	STW/WI	STUCCO WALL WITH WROUGHT IRON FENCE		
FRD	UTILITY FROM COA DISTRIBUTION MAPS	SWS	PAINTED SOLID WHITE TRAFFIC STRIPE		
G/PM	GAS LINE BY PAINT MARK	TA	TOP OF ASPHALT		
GA	GATE	TC	TOP OF CURB		
GRV	LANDSCAPING GRAVEL	TCO	TOP OF CONCRETE		
GVB	GAS VALVE BOX	TG	TOP OF GRATE		
GW	GUY WIRE ANCHOR	TRN	ELECTRIC TRANSFORMER		
HDPE	HIGH DENSITY POLYETHYLENE PIPE	TS	TRAFFIC SIGN		
		TV/PM	CABLE TELEVISION LINE BY PAINT MARK		
		TVCAB	CABLE TELEVISION CABINET		
		TVR	CABLE TELEVISION RISER		
		TYP	TYPICAL		

HIGH MESA Consulting Group
6010-B MIDWAY PARK BLVD. NE • ALBUQUERQUE, NEW MEXICO 87109
PHONE: 505.345.4250 • FAX: 505.345.4254 • www.highmesacg.com

UNCLASSIFIED SURVEY - UTILITY AS-CONSTRUCTED

EA ENGINEERING - KAFB BFF - RIDGECREST DRIVE GEP CORRIDOR

SURVEYED BY M.V.Z.
DRAWN BY T.N.T.
APPROVED BY J.M.S.

NO.	DATE	BY	REVISIONS

JOB NO. 2016.030.7
DATE 01-2018
SHEET 2 OF 6

File Path:P:\MRA\2016\2016030.7\SWR\ | Plot Date: 01-26-2018
File Name:160307_UTIL1.DWG | Plot Time: 10:07 am

RIDGECREST LOOP S.E.

SCALE: 1" = 20'

20 0 40

10 20

TEMPORARY BENCHMARK #1 (T.B.M.)

A MAG NAIL W/WASHER SET IN ASPHALT ON THE SOUTH SIDE OF RIDGECREST DRIVE S.E., AS SHOWN ON THIS SHEET.
ELEVATION = 5332.77 FEET (NAVD 1988)

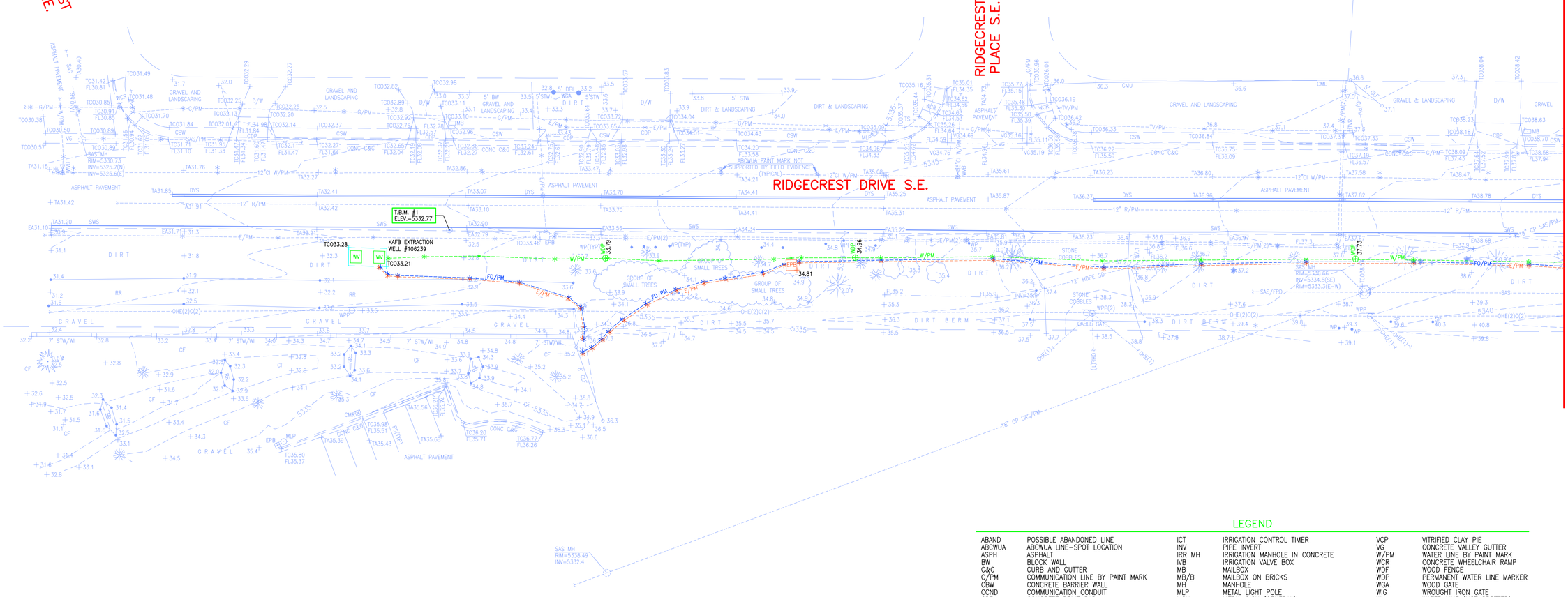

LEGEND

ABAND	POSSIBLE ABANDONED LINE	ICT	IRRIGATION CONTROL TIMER	VCP	VITRIFIED CLAY PIE
ABCWUA	ABCWUA LINE-SPOT LOCATION	INV	PIPE INVERT	VG	CONCRETE VALLEY GUTTER
ASPH	ASPHALT	IRR MH	IRRIGATION MANHOLE IN CONCRETE	W/PM	WATER LINE BY PAINT MARK
BW	BLOCK WALL	IVB	IRRIGATION VALVE BOX	WCR	CONCRETE WHEELCHAIR RAMP
C&G	CURB AND GUTTER	MB	MAILBOX	WDF	WOOD FENCE
C/PM	COMMUNICATION LINE BY PAINT MARK	MB/B	MAILBOX ON BRICKS	WDP	PERMANENT WATER LINE MARKER
CBW	CONCRETE BARRIER WALL	MH	MANHOLE	WGA	WOOD GATE
CCND	COMMUNICATION CONDUIT	MLP	METAL LIGHT POLE	WIG	WROUGHT IRON GATE
CDP	CONCRETE DRIVE PAD	MSN	METAL SIGN (GENERAL)	WL	WATER LINE (NOT SPOTTED)
CF	LANDSCAPING CRUSHER FINES	MTC	METAL TRASH CAN	WLP	WOOD LIGHT POLE
CHC	CONCRETE HEADER CURB	OHC(2)	OVERHEAD COMMUNICATION (# OF LINES)	WMB	WATER METER BOX
CI	CAST IRON PIPE	OHE(2)	OVERHEAD ELECTRIC (# OF LINES)	WP	WOOD POST
CLF	CHAIN LINK FENCE	PBAR	PIPE BARRIER	WPP	WOOD POWER POLE
CLF/BW	CHAIN LINK FENCE WITH BARBED WIRE	PIV	POST INDICATOR VALVE	WRF	4-STRAND SMOOTH WIRE FENCE
CMR	COMMUNICATION RISER	PS	PAINTED PARKING STRIPE	WV	WATER VAULT
CMU	CONCRETE MASONRY UNIT WALL	PVC	POLYVINYL CHLORIDE PIPE	WVB	WATER VALVE BOX
CND	ELECTRIC CONDUIT	R/PM	REUSE WATER LINE BY PAINT MARK		
CONC	CONCRETE	RCP	REINFORCED CONCRETE PIPE	*	PAINTED UTILITY MARK
CP	CONCRETE PIPE	RR	LANDSCAPING RIVER ROCK (DRAINAGE)	*	PAINTED ABCWUA UTILITY MARK
CPB	COMMUNICATION PULLBOX	RRT	LANDSCAPING RAILROAD TIES	ø	TREE TRUNK DIAMETER
CSW	CONCRETE SIDEWALK	RWV	REUSE WATER VAULT		
D/W	CONCRETE DRIVEWAY	SAS	SANITARY SEWER		CONIFEROUS TREE
DBL	DOUBLE	SAS/PM	SANITARY SEWER PIPE BY PAINT MARK		
DPG	DOUBLE PIPE GATE	SD	STORM DRAIN		
DWS	PAINTED DASHED WHITE TRAFFIC STRIPE	SD/PM	STORM DRAIN PIPE BY PAINT MARK		
DYS	PAINTED DOUBLE YELLOW TRAFFIC STRIPE	SDI	STORM DRAIN INLET		
E/PM	ELECTRIC LINE BY PAINT MARK	SDP	SERVICE DROP POLE		DECIDUOUS TREE
EA	EDGE OF ASPHALT	SGP	STEEL GUARD POST		
EPB	ELECTRIC PULLBOX	SP	STEEL POST		
FH	FIRE HYDRANT	SSG	SLIDING STEEL GATE		SMALL DECIDUOUS TREE
FL	FLOWLINE	STW	STUCCO WALL		
FO/PM	FIBER OPTIC LINE BY PAINT MARK	STW/WI	STUCCO WALL WITH WROUGHT IRON FENCE		GROUP OF SMALL TREES
FRD	UTILITY FROM COA DISTRIBUTION MAPS	SWS	PAINTED SOLID WHITE TRAFFIC STRIPE		
G/PM	GAS LINE BY PAINT MARK	TA	TOP OF ASPHALT		
GA	GATE	TC	TOP OF CURB		SHRUB
GRV	LANDSCAPING GRAVEL	TCO	TOP OF CONCRETE		
GVB	GAS VALVE BOX	TG	TOP OF GRATE		TREE STUMP
GW	GUY WIRE ANCHOR	TRN	ELECTRIC TRANSFORMER		
HDPE	HIGH DENSITY POLYETHYLENE PIPE	TS	TRAFFIC SIGN		
		TV/PM	CABLE TELEVISION LINE BY PAINT MARK		
		TVCAB	CABLE TELEVISION CABINET		
		TVR	CABLE TELEVISION RISER		
		TYP	TYPICAL		

File Path:P:\DATA\2016\2016.030.7\SURV\ | Plot Date: 01-26-2018
File Name:160307_UTIL1.DWG | Plot Time: 10:07 am

HIGH MESA Consulting Group
6010-B MIDWAY PARK BLVD. NE • ALBUQUERQUE, NEW MEXICO 87109
PHONE: 505.345.4250 • FAX: 505.345.4254 • www.highmesacg.com

UNCLASSIFIED SURVEY - UTILITY AS-CONSTRUCTED

EA ENGINEERING - KAFB BFF - RIDGECREST DRIVE GEP CORRIDOR

SURVEYED BY M.V.Z.
DRAWN BY T.N.T.
APPROVED BY J.M.S.

NO.	DATE	BY	REVISIONS

JOB NO. 2016.030.7
DATE 01-2018
SHEET 2 OF 6

SCALE: 1" = 20'

20 0 40
10 20

TEMPORARY BENCHMARK #2 (T.B.M.)

A MAG NAIL W/WASHER SET IN CONCRETE NEAR THE SOUTHWEST QUADRANT OF THE INTERSECTION OF RIDGECREST DRIVE S.E. AND DAKOTA STREET S.E., AS SHOWN ON THIS SHEET.
ELEVATION = 5340.94 FEET (NAVD 1988)

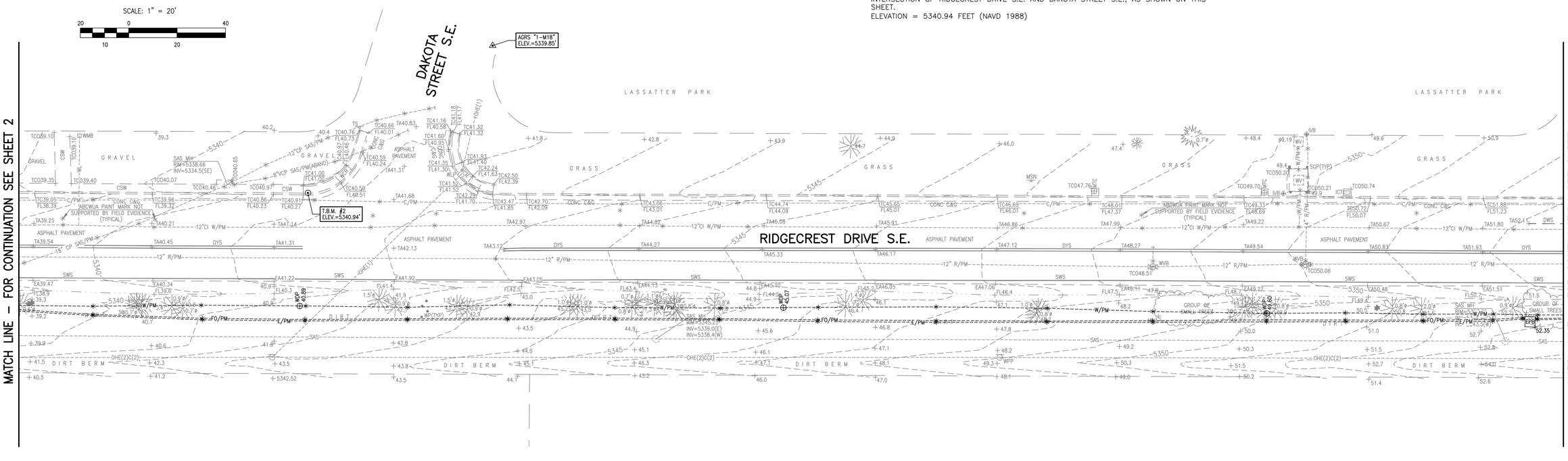

LEGEND

ABAND	POSSIBLE ABANDONED LINE	ICT	IRRIGATION CONTROL TIMER	VCP	VITRIFIED CLAY PIE
ABCWUA	ABCWUA LINE-SPOT LOCATION	INV	PIPE INVERT	VG	CONCRETE VALLEY GUTTER
ASPH	ASPHALT	IRR MH	IRRIGATION MANHOLE IN CONCRETE	W/PM	WATER LINE BY PAINT MARK
BW	BLOCK WALL	IVB	IRRIGATION VALVE BOX	WCR	CONCRETE WHEELCHAIR RAMP
C&G	CURB AND GUTTER	MB	MAILBOX	WDF	WOOD FENCE
C/PM	COMMUNICATION LINE BY PAINT MARK	MB/B	MAILBOX ON BRICKS	WDP	PERMANENT WATER LINE MARKER
CBW	CONCRETE BARRIER WALL	MH	MANHOLE	WGA	WOOD GATE
CCND	COMMUNICATION CONDUIT	MLP	METAL LIGHT POLE	WIG	WROUGHT IRON GATE
CDP	CONCRETE DRIVE PAD	MSN	METAL SIGN (GENERAL)	WL	WATER LINE (NOT SPOTTED)
CF	LANDSCAPING CRUSHER FINES	MTC	METAL TRASH CAN	WLP	WOOD LIGHT POLE
CHC	CONCRETE HEADER CURB	OHC(2)	OVERHEAD COMMUNICATION (# OF LINES)	WMB	WATER METER BOX
CI	CAST IRON PIPE	OHE(2)	OVERHEAD ELECTRIC (# OF LINES)	WP	WOOD POST
CLF	CHAIN LINK FENCE	PBAR	PIPE BARRIER	WPP	WOOD POWER POLE
CLF/BW	CHAIN LINK FENCE WITH BARBED WIRE	PIV	POST INDICATOR VALVE	WRF	4-STRAND SMOOTH WIRE FENCE
CMR	COMMUNICATION RISER	PS	PAINTED PARKING STRIPE	WV	WATER VAULT
CMU	CONCRETE MASONRY UNIT WALL	PVC	POLYVINYL CHLORIDE PIPE	WVB	WATER VALVE BOX
CND	ELECTRIC CONDUIT	R/PM	REUSE WATER LINE BY PAINT MARK		
CONC	CONCRETE	RCP	REINFORCED CONCRETE PIPE	*	PAINTED UTILITY MARK
CP	CONCRETE PIPE	RR	LANDSCAPING RIVER ROCK (DRAINAGE)	*	PAINTED ABCWUA UTILITY MARK
CPB	COMMUNICATION PULLBOX	RRT	LANDSCAPING RAILROAD TIES	ø	TREE TRUNK DIAMETER
CSW	CONCRETE SIDEWALK	RWV	REUSE WATER VAULT		
D/W	CONCRETE DRIVEWAY	SAS	SANITARY SEWER		CONIFEROUS TREE
DBL	DOUBLE	SAS/PM	SANITARY SEWER PIPE BY PAINT MARK		
DPG	DOUBLE PIPE GATE	SD	STORM DRAIN		DECIDUOUS TREE
DWS	PAINTED DASHED WHITE TRAFFIC STRIPE	SD/PM	STORM DRAIN PIPE BY PAINT MARK		
DYS	PAINTED DOUBLE YELLOW TRAFFIC STRIPE	SDI	STORM DRAIN INLET		SMALL DECIDUOUS TREE
E/PM	ELECTRIC LINE BY PAINT MARK	SDP	SERVICE DROP POLE		
EA	EDGE OF ASPHALT	SGP	STEEL GUARD POST		GROUP OF SMALL TREES
EPB	ELECTRIC PULLBOX	SP	STEEL POST		
FH	FIRE HYDRANT	SSG	SLIDING STEEL GATE		SHRUB
FL	FLOWLINE	STW	STUCCO WALL		
FO/PM	FIBER OPTIC LINE BY PAINT MARK	STW/WI	STUCCO WALL WITH WROUGHT IRON FENCE		TREE STUMP
FRD	UTILITY FROM COA DISTRIBUTION MAPS	SWS	PAINTED SOLID WHITE TRAFFIC STRIPE		
G/PM	GAS LINE BY PAINT MARK	TA	TOP OF ASPHALT		
GA	GATE	TC	TOP OF CURB		
GRV	LANDSCAPING GRAVEL	TCO	TOP OF CONCRETE		
GVB	GAS VALVE BOX	TG	TOP OF GRATE		
GW	GUY WIRE ANCHOR	TRN	ELECTRIC TRANSFORMER		
HDPE	HIGH DENSITY POLYETHYLENE PIPE	TS	TRAFFIC SIGN		
		TV/PM	CABLE TELEVISION LINE BY PAINT MARK		
		TVCAB	CABLE TELEVISION CABINET		
		TVR	CABLE TELEVISION RISER		
		TYP	TYPICAL		

HIGH MESA Consulting Group
6010-B MIDWAY PARK BLVD. NE • ALBUQUERQUE, NEW MEXICO 87109
PHONE: 505.345.4250 • FAX: 505.345.4254 • www.highmesacg.com

UNCLASSIFIED SURVEY - UTILITY AS-CONSTRUCTED

EA ENGINEERING - KAFB BFF - RIDGECREST DRIVE GEP CORRIDOR

SURVEYED BY M.V.Z.
DRAWN BY T.N.T.
APPROVED BY J.M.S.

NO.	DATE	BY	REVISIONS

JOB NO. 2016.030.7
DATE 01-2018
SHEET 3 OF 6

File Path:P:\DATA\2016\2016030.7\SURV\ Plot Date: 01-26-2018
File Name:160307_UTIL3.DWG Plot Time: 10:13 am

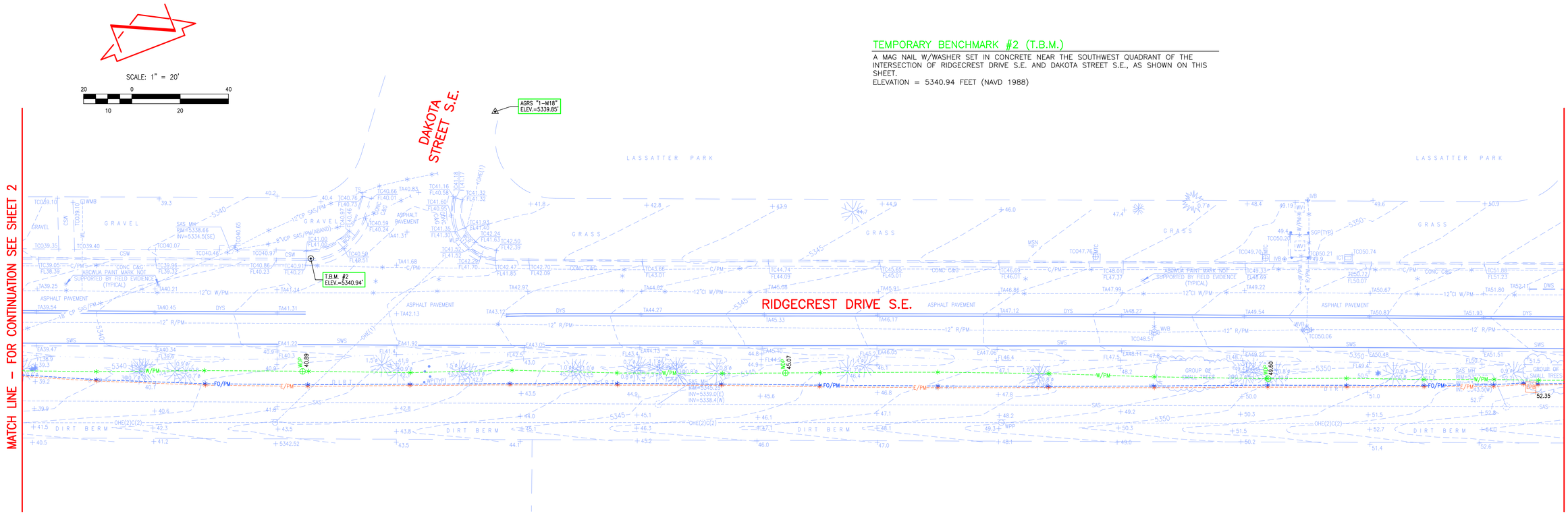

TEMPORARY BENCHMARK #2 (T.B.M.)

A MAG NAIL W/WASHER SET IN CONCRETE NEAR THE SOUTHWEST QUADRANT OF THE INTERSECTION OF RIDGECREST DRIVE S.E. AND DAKOTA STREET S.E., AS SHOWN ON THIS SHEET.
ELEVATION = 5340.94 FEET (NAVD 1988)

LEGEND

ABAND	POSSIBLE ABANDONED LINE	ICT	IRRIGATION CONTROL TIMER	VCP	VITRIFIED CLAY PIE
ABCWUA	ABCWUA LINE-SPOT LOCATION	INV	PIPE INVERT	VG	CONCRETE VALLEY GUTTER
ASPH	ASPHALT	IRR MH	IRRIGATION MANHOLE IN CONCRETE	W/PM	WATER LINE BY PAINT MARK
BW	BLOCK WALL	IVB	IRRIGATION VALVE BOX	WCR	CONCRETE WHEELCHAIR RAMP
C&G	CURB AND GUTTER	MB	MAILBOX	WDF	WOOD FENCE
C/PM	COMMUNICATION LINE BY PAINT MARK	MB/B	MAILBOX ON BRICKS	WDP	PERMANENT WATER LINE MARKER
CBW	CONCRETE BARRIER WALL	MH	MANHOLE	WGA	WOOD GATE
CCND	COMMUNICATION CONDUIT	MLP	METAL LIGHT POLE	WIG	WROUGHT IRON GATE
CDP	CONCRETE DRIVE PAD	MSN	METAL SIGN (GENERAL)	WL	WATER LINE (NOT SPOTTED)
CF	LANDSCAPING CRUSHER FINES	MTC	METAL TRASH CAN	WLP	WOOD LIGHT POLE
CHC	CONCRETE HEADER CURB	OHC(2)	OVERHEAD COMMUNICATION (# OF LINES)	WMB	WATER METER BOX
CI	CAST IRON PIPE	OHE(2)	OVERHEAD ELECTRIC (# OF LINES)	WP	WOOD POST
CLF	CHAIN LINK FENCE	PBAR	PIPE BARRIER	WPP	WOOD POWER POLE
CLF/BW	CHAIN LINK FENCE WITH BARBED WIRE	PIV	POST INDICATOR VALVE	WRF	4-STRAND SMOOTH WIRE FENCE
CMR	COMMUNICATION RISER	PS	PAINTED PARKING STRIPE	WV	WATER VAULT
CMU	CONCRETE MASONRY UNIT WALL	PVC	POLYVINYL CHLORIDE PIPE	WVB	WATER VALVE BOX
CND	ELECTRIC CONDUIT	R/PM	REUSE WATER LINE BY PAINT MARK		
CONC	CONCRETE	RCP	REINFORCED CONCRETE PIPE	*	PAINTED UTILITY MARK
CP	CONCRETE PIPE	RR	LANDSCAPING RIVER ROCK (DRAINAGE)	*	PAINTED ABCWUA UTILITY MARK
CPB	COMMUNICATION PULLBOX	RRT	LANDSCAPING RAILROAD TIES	ø	TREE TRUNK DIAMETER
CSW	CONCRETE SIDEWALK	RWV	REUSE WATER VAULT		
D/W	CONCRETE DRIVEWAY	SAS	SANITARY SEWER		CONIFEROUS TREE
DBL	DOUBLE	SAS/PM	SANITARY SEWER PIPE BY PAINT MARK		
DPG	DOUBLE PIPE GATE	SD	STORM DRAIN		DECIDUOUS TREE
DWS	PAINTED DASHED WHITE TRAFFIC STRIPE	SD/PM	STORM DRAIN PIPE BY PAINT MARK		
DYS	PAINTED DOUBLE YELLOW TRAFFIC STRIPE	SDI	STORM DRAIN INLET		SMALL DECIDUOUS TREE
E/PM	ELECTRIC LINE BY PAINT MARK	SDP	SERVICE DROP POLE		
EA	EDGE OF ASPHALT	SGP	STEEL GUARD POST		GROUP OF SMALL TREES
EPB	ELECTRIC PULLBOX	SP	STEEL POST		
FH	FIRE HYDRANT	SSG	SLIDING STEEL GATE		SHRUB
FL	FLOWLINE	STW	STUCCO WALL		
FO/PM	FIBER OPTIC LINE BY PAINT MARK	STW/WI	STUCCO WALL WITH WROUGHT IRON FENCE		TREE STUMP
FRD	UTILITY FROM COA DISTRIBUTION MAPS	SWS	PAINTED SOLID WHITE TRAFFIC STRIPE		
G/PM	GAS LINE BY PAINT MARK	TA	TOP OF ASPHALT		
GA	GATE	TC	TOP OF CURB		
GRV	LANDSCAPING GRAVEL	TCO	TOP OF CONCRETE		
GVB	GAS VALVE BOX	TG	TOP OF GRATE		
GW	GUY WIRE ANCHOR	TRN	ELECTRIC TRANSFORMER		
HDPE	HIGH DENSITY POLYETHYLENE PIPE	TS	TRAFFIC SIGN		
		TV/PM	CABLE TELEVISION LINE BY PAINT MARK		
		TVCAB	CABLE TELEVISION CABINET		
		TVR	CABLE TELEVISION RISER		
		TYP	TYPICAL		

HIGH MESA Consulting Group
6010-B MIDWAY PARK BLVD. NE • ALBUQUERQUE, NEW MEXICO 87109
PHONE: 505.345.4250 • FAX: 505.345.4254 • www.highmesacg.com

UNCLASSIFIED SURVEY - UTILITY AS-CONSTRUCTED

EA ENGINEERING - KAFB BFF - RIDGECREST DRIVE GEP CORRIDOR

SURVEYED BY M.V.Z.
DRAWN BY T.N.T.
APPROVED BY J.M.S.

NO.	DATE	BY	REVISIONS

JOB NO. 2016.030.7
DATE 01-2018
SHEET 3 OF 6

File Path:P:\DATA\2016\2016030.7\SIA\
File Name:160307_UTIL3.DWG
Plot Date: 01-26-2018
Plot Time: 10:13 am

SCALE: 1" = 20'

20 0 40
10 20

TEMPORARY BENCHMARK #3 (T.B.M.)

A MAG NAIL W/WASHER SET IN TOP OF CONCRETE CURB ON THE NORTH SIDE OF RIDGECREST DRIVE S.E., AS SHOWN ON THIS SHEET.
ELEVATION = 5353.72 FEET (NAVD 1988)

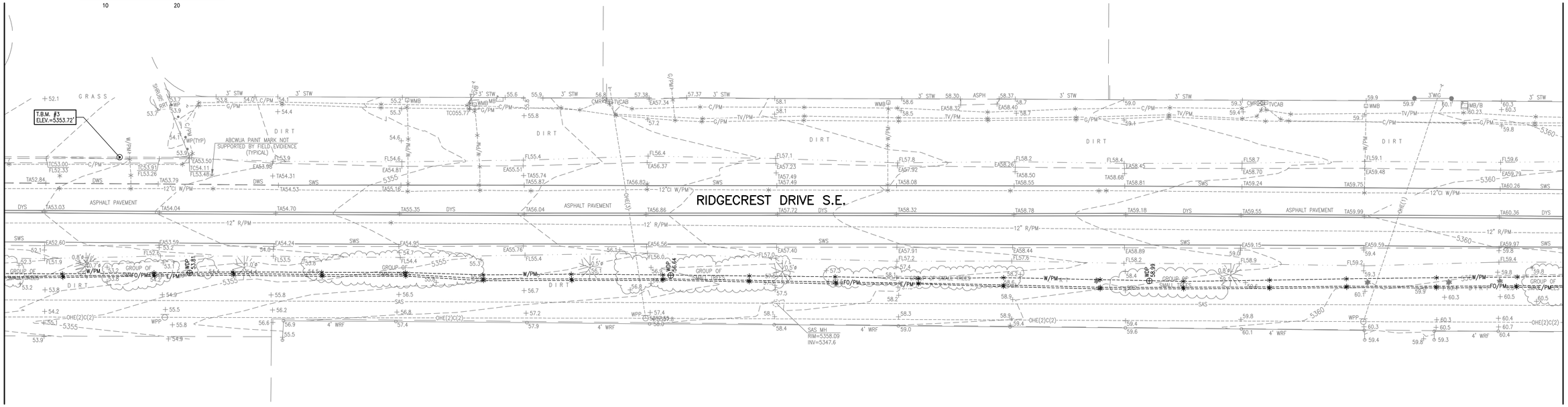

LEGEND

ABAND	POSSIBLE ABANDONED LINE	ICT	IRRIGATION CONTROL TIMER	VCP	VITRIFIED CLAY PIE
ABCWUA	ABCWUA LINE-SPOT LOCATION	INV	PIPE INVERT	VG	CONCRETE VALLEY GUTTER
ASPH	ASPHALT	IRR MH	IRRIGATION MANHOLE IN CONCRETE	W/PM	WATER LINE BY PAINT MARK
BW	BLOCK WALL	IVB	IRRIGATION VALVE BOX	WCR	CONCRETE WHEELCHAIR RAMP
C&G	CURB AND GUTTER	MB	MAILBOX	WDF	WOOD FENCE
C/PM	COMMUNICATION LINE BY PAINT MARK	MB/B	MAILBOX ON BRICKS	WDP	PERMANENT WATER LINE MARKER
CBW	CONCRETE BARRIER WALL	MH	MANHOLE	WGA	WOOD GATE
CCND	COMMUNICATION CONDUIT	MLP	METAL LIGHT POLE	WIG	WROUGHT IRON GATE
CDP	CONCRETE DRIVE PAD	MSN	METAL SIGN (GENERAL)	WL	WATER LINE (NOT SPOTTED)
CF	LANDSCAPING CRUSHER FINES	MTC	METAL TRASH CAN	WLP	WOOD LIGHT POLE
CHC	CONCRETE HEADER CURB	OHC(2)	OVERHEAD COMMUNICATION (# OF LINES)	WMB	WATER METER BOX
CI	CAST IRON PIPE	OHE(2)	OVERHEAD ELECTRIC (# OF LINES)	WP	WOOD POST
CLF	CHAIN LINK FENCE	PBAR	PIPE BARRIER	WPP	WOOD POWER POLE
CLF/BW	CHAIN LINK FENCE WITH BARBED WIRE	PIV	POST INDICATOR VALVE	WRF	4-STRAND SMOOTH WIRE FENCE
CMR	COMMUNICATION RISER	PS	PAINTED PARKING STRIPE	WV	WATER VAULT
CMU	CONCRETE MASONRY UNIT WALL	PVC	POLYVINYL CHLORIDE PIPE	WVB	WATER VALVE BOX
CND	ELECTRIC CONDUIT	R/PM	REUSE WATER LINE BY PAINT MARK		
CONC	CONCRETE	RCP	REINFORCED CONCRETE PIPE	*	PAINTED UTILITY MARK
CP	CONCRETE PIPE	RR	LANDSCAPING RIVER ROCK (DRAINAGE)	*	PAINTED ABCWUA UTILITY MARK
CPB	COMMUNICATION PULLBOX	RRT	LANDSCAPING RAILROAD TIES		
CSW	CONCRETE SIDEWALK	RWV	REUSE WATER VAULT	ø	TREE TRUNK DIAMETER
D/W	CONCRETE DRIVEWAY	SAS	SANITARY SEWER		
DBL	DOUBLE	SAS/PM	SANITARY SEWER PIPE BY PAINT MARK		CONIFEROUS TREE
DPG	DOUBLE PIPE GATE	SD	STORM DRAIN		
DWS	PAINTED DASHED WHITE TRAFFIC STRIPE	SD/PM	STORM DRAIN PIPE BY PAINT MARK		
DYS	PAINTED DOUBLE YELLOW TRAFFIC STRIPE	SDI	STORM DRAIN INLET		
E/PM	ELECTRIC LINE BY PAINT MARK	SDP	SERVICE DROP POLE		
EA	EDGE OF ASPHALT	SGP	STEEL GUARD POST		DECIDUOUS TREE
EPB	ELECTRIC PULLBOX	SP	STEEL POST		
FH	FIRE HYDRANT	SSG	SLIDING STEEL GATE		
FL	FLOWLINE	STW	STUCCO WALL		SMALL DECIDUOUS TREE
FO/PM	FIBER OPTIC LINE BY PAINT MARK	STW/WI	STUCCO WALL WITH WROUGHT IRON FENCE		
FRD	UTILITY FROM COA DISTRIBUTION MAPS	SWS	PAINTED SOLID WHITE TRAFFIC STRIPE		GROUP OF SMALL TREES
G/PM	GAS LINE BY PAINT MARK	TA	TOP OF ASPHALT		
GA	GATE	TC	TOP OF CURB		
GRV	LANDSCAPING GRAVEL	TCO	TOP OF CONCRETE		SHRUB
GVB	GAS VALVE BOX	TG	TOP OF GRATE		
GW	GUY WIRE ANCHOR	TRN	ELECTRIC TRANSFORMER	*	TREE STUMP
HDPE	HIGH DENSITY POLYETHYLENE PIPE	TS	TRAFFIC SIGN		
		TV/PM	CABLE TELEVISION LINE BY PAINT MARK		
		TVCAB	CABLE TELEVISION CABINET		
		TVR	CABLE TELEVISION RISER		
		TYP	TYPICAL		

HIGH MESA Consulting Group
6010-B MIDWAY PARK BLVD. NE • ALBUQUERQUE, NEW MEXICO 87109
PHONE: 505.345.4250 • FAX: 505.345.4254 • www.highmesacg.com

UNCLASSIFIED SURVEY - UTILITY AS-CONSTRUCTED

EA ENGINEERING - KAFB BFF - RIDGECREST DRIVE GEP CORRIDOR

SURVEYED BY M.V.Z.
DRAWN BY T.N.T.
APPROVED BY J.M.S.

NO.	DATE	BY	REVISIONS

JOB NO. 2016.030.7
DATE 01-2018
SHEET 4 OF 6

File Path:P:\DATA\2016\2016030.7\SURV\ Plot Date: 01-26-2018
File Name:160307_UTIL4.DWG Plot Time: 10:14 am

TEMPORARY BENCHMARK #3 (T.B.M.)

A MAG NAIL W/WASHER SET IN TOP OF CONCRETE CURB ON THE NORTH SIDE OF RIDGECREST DRIVE S.E., AS SHOWN ON THIS SHEET.
ELEVATION = 5353.72 FEET (NAVD 1988)

SCALE: 1" = 20'

20 0 40
10 20

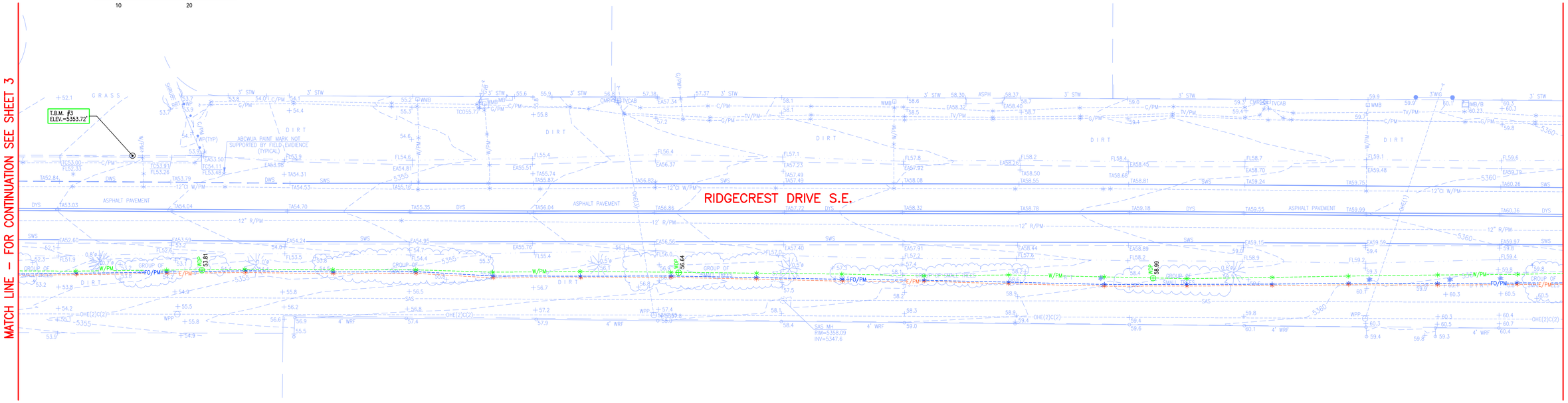

LEGEND

ABAND	POSSIBLE ABANDONED LINE	ICT	IRRIGATION CONTROL TIMER	VCP	VITRIFIED CLAY PIE
ABCWUA	ABCWUA LINE-SPOT LOCATION	INV	PIPE INVERT	VC	CONCRETE VALLEY GUTTER
ASPH	ASPHALT	IRR MH	IRRIGATION MANHOLE IN CONCRETE	W/PM	WATER LINE BY PAINT MARK
BW	BLOCK WALL	IVB	IRRIGATION VALVE BOX	WCR	CONCRETE WHEELCHAIR RAMP
C&G	CURB AND GUTTER	MB	MAILBOX	WDF	WOOD FENCE
C/PM	COMMUNICATION LINE BY PAINT MARK	MB/B	MAILBOX ON BRICKS	WDP	PERMANENT WATER LINE MARKER
CBW	CONCRETE BARRIER WALL	MH	MANHOLE	WGA	WOOD GATE
CCND	COMMUNICATION CONDUIT	MLP	METAL LIGHT POLE	WIG	WROUGHT IRON GATE
CDP	CONCRETE DRIVE PAD	MSN	METAL SIGN (GENERAL)	WL	WATER LINE (NOT SPOTTED)
CF	LANDSCAPING CRUSHER FINES	MTC	METAL TRASH CAN	WLP	WOOD LIGHT POLE
CHC	CONCRETE HEADER CURB	OHC(2)	OVERHEAD COMMUNICATION (# OF LINES)	WMB	WATER METER BOX
CI	CAST IRON PIPE	OHE(2)	OVERHEAD ELECTRIC (# OF LINES)	WP	WOOD POST
CLF	CHAIN LINK FENCE	PBAR	PIPE BARRIER	WPP	WOOD POWER POLE
CLF/BW	CHAIN LINK FENCE WITH BARBED WIRE	PIV	POST INDICATOR VALVE	WRF	4-STRAND SMOOTH WIRE FENCE
CMR	COMMUNICATION RISER	PS	PAINTED PARKING STRIPE	WV	WATER VAULT
CMU	CONCRETE MASONRY UNIT WALL	PVC	POLYVINYL CHLORIDE PIPE	WVB	WATER VALVE BOX
CND	ELECTRIC CONDUIT	R/PM	REUSE WATER LINE BY PAINT MARK		
CONC	CONCRETE	RCP	REINFORCED CONCRETE PIPE	*	PAINTED UTILITY MARK
CP	CONCRETE PIPE	RR	LANDSCAPING RIVER ROCK (DRAINAGE)	*	PAINTED ABCWUA UTILITY MARK
CPB	COMMUNICATION PULLBOX	RRT	LANDSCAPING RAILROAD TIES	ø	TREE TRUNK DIAMETER
CSW	CONCRETE SIDEWALK	RWV	REUSE WATER VAULT		CONIFEROUS TREE
D/W	CONCRETE DRIVEWAY	SAS	SANITARY SEWER		
DBL	DOUBLE	SAS/PM	SANITARY SEWER PIPE BY PAINT MARK		DECIDUOUS TREE
DPG	DOUBLE PIPE GATE	SD	STORM DRAIN		
DWS	PAINTED DASHED WHITE TRAFFIC STRIPE	SD/PM	STORM DRAIN PIPE BY PAINT MARK		SMALL DECIDUOUS TREE
DYS	PAINTED DOUBLE YELLOW TRAFFIC STRIPE	SDI	STORM DRAIN INLET		
E/PM	ELECTRIC LINE BY PAINT MARK	SDP	SERVICE DROP POLE		GROUP OF SMALL TREES
EA	EDGE OF ASPHALT	SGP	STEEL GUARD POST		
EPB	ELECTRIC PULLBOX	SP	STEEL POST		SHRUB
FH	FIRE HYDRANT	SSG	SLIDING STEEL GATE		
FL	FLOWLINE	STW	STUCCO WALL		TREE STUMP
FO/PM	FIBER OPTIC LINE BY PAINT MARK	STW/WI	STUCCO WALL WITH WROUGHT IRON FENCE		
FRD	UTILITY FROM COA DISTRIBUTION MAPS	SWS	PAINTED SOLID WHITE TRAFFIC STRIPE		
G/PM	GAS LINE BY PAINT MARK	TA	TOP OF ASPHALT		
GA	GATE	TC	TOP OF CURB		
GRV	LANDSCAPING GRAVEL	TCO	TOP OF CONCRETE		
GVB	GAS VALVE BOX	TG	TOP OF GRATE		
GW	GUY WIRE ANCHOR	TRN	ELECTRIC TRANSFORMER		
HDPE	HIGH DENSITY POLYETHYLENE PIPE	TS	TRAFFIC SIGN		
		TV/PM	CABLE TELEVISION LINE BY PAINT MARK		
		TVCAB	CABLE TELEVISION CABINET		
		TVR	CABLE TELEVISION RISER		
		TYP	TYPICAL		

HIGH MESA Consulting Group
6010-B MIDWAY PARK BLVD. NE • ALBUQUERQUE, NEW MEXICO 87109
PHONE: 505.345.4250 • FAX: 505.345.4254 • www.highmesacg.com

UNCLASSIFIED SURVEY - UTILITY AS-CONSTRUCTED

EA ENGINEERING - KAFB BFF - RIDGECREST DRIVE GEP CORRIDOR

SURVEYED BY M.V.Z.
DRAWN BY T.N.T.
APPROVED BY J.M.S.

NO.	DATE	BY	REVISIONS

JOB NO. 2016.030.7
DATE 01-2018
SHEET 4 OF 6

File Path:P:\JMA\2016\2016030.7\SIR\
File Name:160307_UTIL4.DWG
Plot Date: 01-26-2018
Plot Time: 10:14 am

SCALE: 1" = 20'

20 0 40

10 20

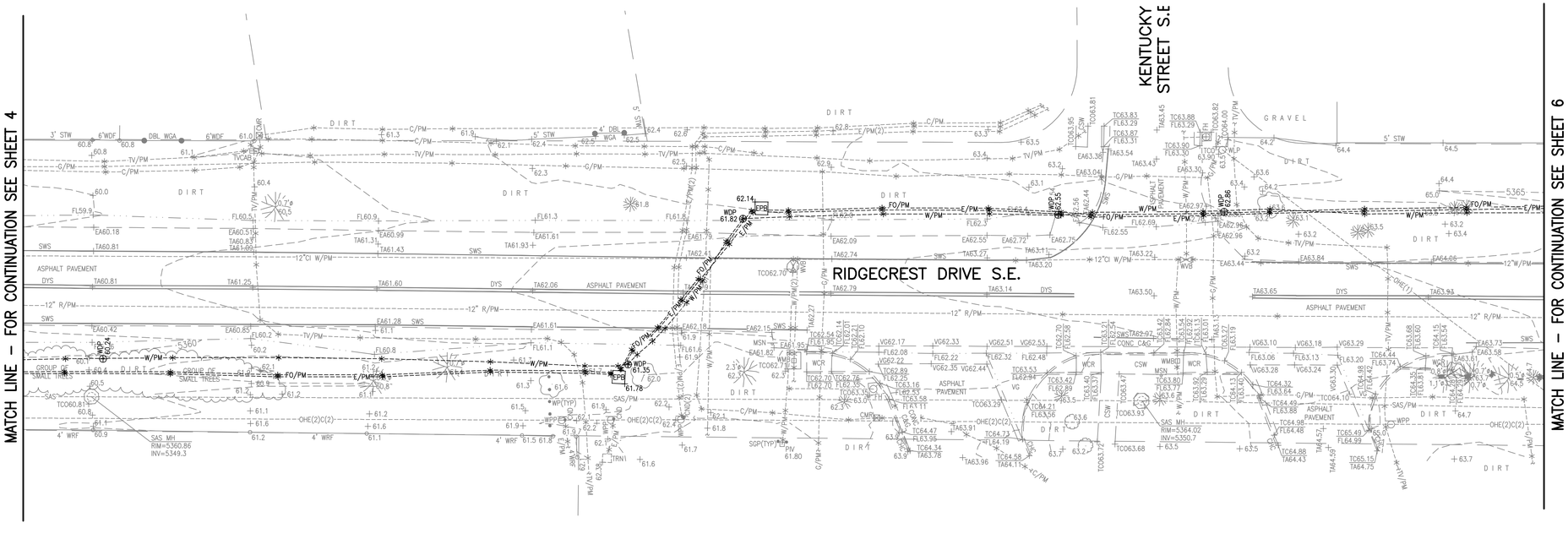

LEGEND

ABAND	POSSIBLE ABANDONED LINE	ICT	IRRIGATION CONTROL TIMER	VCP	VITRIFIED CLAY PIE
ABCWUA	ABCWUA LINE-SPOT LOCATION	INV	PIPE INVERT	VG	CONCRETE VALLEY GUTTER
ASPH	ASPHALT	IRR MH	IRRIGATION MANHOLE IN CONCRETE	W/PM	WATER LINE BY PAINT MARK
BW	BLOCK WALL	IVB	IRRIGATION VALVE BOX	WCR	CONCRETE WHEELCHAIR RAMP
C&G	CURB AND GUTTER	MB	MAILBOX	WDF	WOOD FENCE
C/PM	COMMUNICATION LINE BY PAINT MARK	MB/B	MAILBOX ON BRICKS	WDP	PERMANENT WATER LINE MARKER
CBW	CONCRETE BARRIER WALL	MH	MANHOLE	WGA	WOOD GATE
CCND	COMMUNICATION CONDUIT	MLP	METAL LIGHT POLE	WIG	WROUGHT IRON GATE
CDP	CONCRETE DRIVE PAD	MSN	METAL SIGN (GENERAL)	WL	WATER LINE (NOT SPOTTED)
CF	LANDSCAPING CRUSHER FINES	MTC	METAL TRASH CAN	WLP	WOOD LIGHT POLE
CHC	CONCRETE HEADER CURB	OHC(2)	OVERHEAD COMMUNICATION (# OF LINES)	WMB	WATER METER BOX
CI	CAST IRON PIPE	OHE(2)	OVERHEAD ELECTRIC (# OF LINES)	WP	WOOD POST
CLF	CHAIN LINK FENCE	PBAR	PIPE BARRIER	WPP	WOOD POWER POLE
CLF/BW	CHAIN LINK FENCE WITH BARBED WIRE	PIV	POST INDICATOR VALVE	WRF	4-STRAND SMOOTH WIRE FENCE
CMR	COMMUNICATION RISER	PS	PAINTED PARKING STRIPE	WV	WATER VAULT
CMU	CONCRETE MASONRY UNIT WALL	PVC	POLYVINYL CHLORIDE PIPE	WVB	WATER VALVE BOX
CND	ELECTRIC CONDUIT	R/PM	REUSE WATER LINE BY PAINT MARK		
CONC	CONCRETE	RCP	REINFORCED CONCRETE PIPE	*	PAINTED UTILITY MARK
CP	CONCRETE PIPE	RR	LANDSCAPING RIVER ROCK (DRAINAGE)	*	PAINTED ABCWUA UTILITY MARK
CPB	COMMUNICATION PULLBOX	RRT	LANDSCAPING RAILROAD TIES	ø	TREE TRUNK DIAMETER
CSW	CONCRETE SIDEWALK	RWV	REUSE WATER VAULT		CONIFEROUS TREE
D/W	CONCRETE DRIVEWAY	SAS	SANITARY SEWER		DECIDUOUS TREE
DBL	DOUBLE	SAS/PM	SANITARY SEWER PIPE BY PAINT MARK		SMALL DECIDUOUS TREE
DPG	DOUBLE PIPE GATE	SD	STORM DRAIN		GROUP OF SMALL TREES
DWS	PAINTED DASHED WHITE TRAFFIC STRIPE	SD/PM	STORM DRAIN PIPE BY PAINT MARK		SHRUB
DYS	PAINTED DOUBLE YELLOW TRAFFIC STRIPE	SDI	STORM DRAIN INLET		TREE STUMP
E/PM	ELECTRIC LINE BY PAINT MARK	SDP	SERVICE DROP POLE		
EA	EDGE OF ASPHALT	SGP	STEEL GUARD POST		
EPB	ELECTRIC PULLBOX	SP	STEEL POST		
FH	FIRE HYDRANT	SSG	SLIDING STEEL GATE		
FL	FLOWLINE	STW	STUCCO WALL		
FO/PM	FIBER OPTIC LINE BY PAINT MARK	STW/WI	STUCCO WALL WITH WROUGHT IRON FENCE		
FRD	UTILITY FROM COA DISTRIBUTION MAPS	SWS	PAINTED SOLID WHITE TRAFFIC STRIPE		
G/PM	GAS LINE BY PAINT MARK	TA	TOP OF ASPHALT		
GA	GATE	TC	TOP OF CURB		
GRV	LANDSCAPING GRAVEL	TCO	TOP OF CONCRETE		
GVB	GAS VALVE BOX	TG	TOP OF GRATE		
GW	GUY WIRE ANCHOR	TRN	ELECTRIC TRANSFORMER		
HDPE	HIGH DENSITY POLYETHYLENE PIPE	TS	TRAFFIC SIGN		
		TV/PM	CABLE TELEVISION LINE BY PAINT MARK		
		TVCAB	CABLE TELEVISION CABINET		
		TVR	CABLE TELEVISION RISER		
		TYP	TYPICAL		

File Path:P:\DATA\2016\2016030.7\SIA\ | Plot Date: 01-26-2018
File Name:160307_UTIL5.DWG | Plot Time: 10:16 am

HIGH MESA Consulting Group
6010-B MIDWAY PARK BLVD. NE • ALBUQUERQUE, NEW MEXICO 87109
PHONE: 505.345.4250 • FAX: 505.345.4254 • www.highmesacg.com

UNCLASSIFIED SURVEY - UTILITY AS-CONSTRUCTED

EA ENGINEERING - KAFB BFF - RIDGECREST DRIVE GEP CORRIDOR

SURVEYED BY M.V.Z.
DRAWN BY T.N.T.
APPROVED BY J.M.S.

NO.	DATE	BY	REVISIONS

JOB NO. 2016.030.7
DATE 01-2018
SHEET 5 OF 6

SCALE: 1" = 20'

20 0 40
10 20

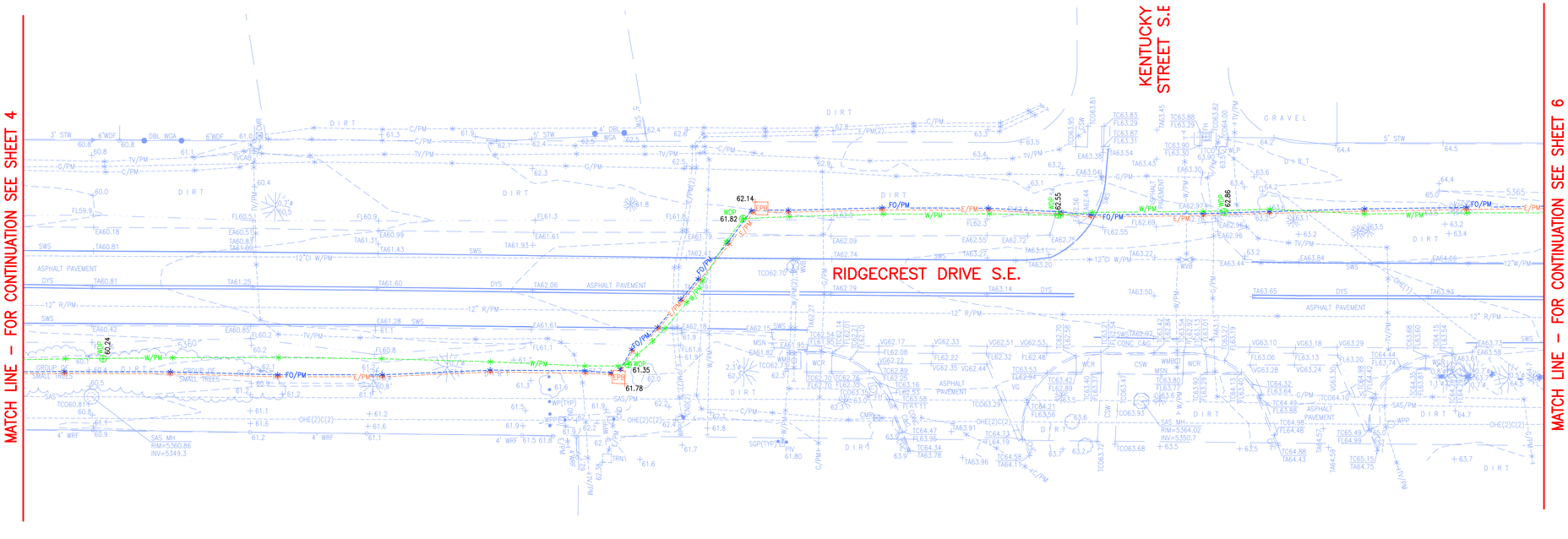

LEGEND

ABAND	POSSIBLE ABANDONED LINE	ICT	IRRIGATION CONTROL TIMER	VCP	VITRIFIED CLAY PIE
ABCWUA	ABCWUA LINE-SPOT LOCATION	INV	PIPE INVERT	VG	CONCRETE VALLEY GUTTER
ASPH	ASPHALT	IRR MH	IRRIGATION MANHOLE IN CONCRETE	W/PM	WATER LINE BY PAINT MARK
BW	BLOCK WALL	IVB	IRRIGATION VALVE BOX	WCR	CONCRETE WHEELCHAIR RAMP
C&G	CURB AND GUTTER	MB	MAILBOX	WDF	WOOD FENCE
C/PM	COMMUNICATION LINE BY PAINT MARK	MB/B	MAILBOX ON BRICKS	WDP	PERMANENT WATER LINE MARKER
CBW	CONCRETE BARRIER WALL	MH	MANHOLE	WGA	WOOD GATE
CCND	COMMUNICATION CONDUIT	MLP	METAL LIGHT POLE	WIG	WROUGHT IRON GATE
CDP	CONCRETE DRIVE PAD	MSN	METAL SIGN (GENERAL)	WL	WATER LINE (NOT SPOTTED)
CF	LANDSCAPING CRUSHER FINES	MTC	METAL TRASH CAN	WLP	WOOD LIGHT POLE
CHC	CONCRETE HEADER CURB	OHC(2)	OVERHEAD COMMUNICATION (# OF LINES)	WMB	WATER METER BOX
CI	CAST IRON PIPE	OHE(2)	OVERHEAD ELECTRIC (# OF LINES)	WP	WOOD POST
CLF	CHAIN LINK FENCE	PBAR	PIPE BARRIER	WPP	WOOD POWER POLE
CLF/BW	CHAIN LINK FENCE WITH BARBED WIRE	PIV	POST INDICATOR VALVE	WRF	4-STRAND SMOOTH WIRE FENCE
CMR	COMMUNICATION RISER	PS	PAINTED PARKING STRIPE	WV	WATER VAULT
CMU	CONCRETE MASONRY UNIT WALL	PVC	POLYVINYL CHLORIDE PIPE	WVB	WATER VALVE BOX
CND	ELECTRIC CONDUIT	R/PM	REUSE WATER LINE BY PAINT MARK		
CONC	CONCRETE	RCP	REINFORCED CONCRETE PIPE	*	PAINTED UTILITY MARK
CP	CONCRETE PIPE	RR	LANDSCAPING RIVER ROCK (DRAINAGE)	*	PAINTED ABCWUA UTILITY MARK
CPB	COMMUNICATION PULLBOX	RRT	LANDSCAPING RAILROAD TIES	ø	TREE TRUNK DIAMETER
CSW	CONCRETE SIDEWALK	RWV	REUSE WATER VAULT		CONIFEROUS TREE
D/W	CONCRETE DRIVEWAY	SAS	SANITARY SEWER		
DBL	DOUBLE	SAS/PM	SANITARY SEWER PIPE BY PAINT MARK		DECIDUOUS TREE
DPG	DOUBLE PIPE GATE	SD	STORM DRAIN		
DWS	PAINTED DASHED WHITE TRAFFIC STRIPE	SD/PM	STORM DRAIN PIPE BY PAINT MARK		SMALL DECIDUOUS TREE
DYS	PAINTED DOUBLE YELLOW TRAFFIC STRIPE	SDI	STORM DRAIN INLET		
E/PM	ELECTRIC LINE BY PAINT MARK	SDP	SERVICE DROP POLE		GROUP OF SMALL TREES
EA	EDGE OF ASPHALT	SGP	STEEL GUARD POST		
EPB	ELECTRIC PULLBOX	SP	STEEL POST		SHRUB
FH	FIRE HYDRANT	SSG	SLIDING STEEL GATE		
FL	FLOWLINE	STW	STUCCO WALL		TREE STUMP
FO/PM	FIBER OPTIC LINE BY PAINT MARK	STW/WI	STUCCO WALL WITH WROUGHT IRON FENCE		
FRD	UTILITY FROM COA DISTRIBUTION MAPS	SWS	PAINTED SOLID WHITE TRAFFIC STRIPE		
G/PM	GAS LINE BY PAINT MARK	TA	TOP OF ASPHALT		
GA	GATE	TC	TOP OF CURB		
GRV	LANDSCAPING GRAVEL	TCO	TOP OF CONCRETE		
GVB	GAS VALVE BOX	TG	TOP OF GRATE		
GW	GUY WIRE ANCHOR	TRN	ELECTRIC TRANSFORMER		
HDPE	HIGH DENSITY POLYETHYLENE PIPE	TS	TRAFFIC SIGN		
		TV/PM	CABLE TELEVISION LINE BY PAINT MARK		
		TVCAB	CABLE TELEVISION CABINET		
		TVR	CABLE TELEVISION RISER		
		TYP	TYPICAL		

HIGH MESA Consulting Group
6010-B MIDWAY PARK BLVD. NE • ALBUQUERQUE, NEW MEXICO 87109
PHONE: 505.345.4250 • FAX: 505.345.4254 • www.highmesacg.com

UNCLASSIFIED SURVEY - UTILITY AS-CONSTRUCTED

EA ENGINEERING - KAFB BFF - RIDGECREST DRIVE GEP CORRIDOR

SURVEYED BY M.V.Z.
DRAWN BY T.N.T.
APPROVED BY J.M.S.

NO.	DATE	BY	REVISIONS

JOB NO. 2016.030.7
DATE 01-2018
SHEET 5 OF 6

File Path:P:\JMA\2016\2016030.7\SIA\ | Plot Date: 01-26-2018
File Name:160307_UTIL5.DWG | Plot Time: 10:16 am

TEMPORARY BENCHMARK #4 (T.B.M.)

A MAG NAIL W/WASHER SET IN ASPHALT NEAR THE SOUTHEAST QUADRANT OF THE INTERSECTION OF RIDGECREST DRIVE S.E. AND LOUISIANA BOULEVARD S.E., AS SHOWN ON THIS SHEET.
ELEVATION = 5364.68 FEET (NAVD 1988)

LEGEND

ABAND	POSSIBLE ABANDONED LINE	ICT	IRRIGATION CONTROL TIMER	VCP	VITRIFIED CLAY PIE
ABCWUA	ABCWUA LINE-SPOT LOCATION	INV	PIPE INVERT	VG	CONCRETE VALLEY GUTTER
ASPH	ASPHALT	IRR MH	IRRIGATION MANHOLE IN CONCRETE	W/PM	WATER LINE BY PAINT MARK
BW	BLOCK WALL	IVB	IRRIGATION VALVE BOX	WCR	CONCRETE WHEELCHAIR RAMP
C&G	CURB AND GUTTER	MB	MAILBOX	WDF	WOOD FENCE
C/PM	COMMUNICATION LINE BY PAINT MARK	MB/B	MAILBOX ON BRICKS	WDP	PERMANENT WATER LINE MARKER
CBW	CONCRETE BARRIER WALL	MH	MANHOLE	WGA	WOOD GATE
COND	COMMUNICATION CONDUIT	MLP	METAL LIGHT POLE	WIG	WROUGHT IRON GATE
CDP	CONCRETE DRIVE PAD	MSN	METAL SIGN (GENERAL)	WL	WATER LINE (NOT SPOTTED)
CF	LANDSCAPING CRUSHER FINES	MTC	METAL TRASH CAN	WLP	WOOD LIGHT POLE
CHC	CONCRETE HEADER CURB	OHC(2)	OVERHEAD COMMUNICATION (# OF LINES)	WMB	WATER METER BOX
CI	CAST IRON PIPE	OHE(2)	OVERHEAD ELECTRIC (# OF LINES)	WP	WOOD POST
CLF	CHAIN LINK FENCE	PBAR	PIPE BARRIER	WPP	WOOD POWER POLE
CLF/BW	CHAIN LINK FENCE WITH BARBED WIRE	PIV	POST INDICATOR VALVE	WRF	4-STRAND SMOOTH WIRE FENCE
CMR	COMMUNICATION RISER	PS	PAINTED PARKING STRIPE	WV	WATER VAULT
CMU	CONCRETE MASONRY UNIT WALL	PVC	POLYVINYL CHLORIDE PIPE	WVB	WATER VALVE BOX
CND	ELECTRIC CONDUIT	R/PM	REUSE WATER LINE BY PAINT MARK		
CONC	CONCRETE	RCP	REINFORCED CONCRETE PIPE	*	PAINTED UTILITY MARK
CP	CONCRETE PIPE	RR	LANDSCAPING RIVER ROCK (DRAINAGE)	*	PAINTED ABCWUA UTILITY MARK
CPB	COMMUNICATION PULLBOX	RRT	LANDSCAPING RAILROAD TIES	ø	TREE TRUNK DIAMETER
CSW	CONCRETE SIDEWALK	RWV	REUSE WATER VAULT		
D/W	CONCRETE DRIVEWAY	SAS	SANITARY SEWER		CONIFEROUS TREE
DBL	DOUBLE	SAS/PM	SANITARY SEWER PIPE BY PAINT MARK		
DPG	DOUBLE PIPE GATE	SD	STORM DRAIN		
DWS	PAINTED DASHED WHITE TRAFFIC STRIPE	SD/PM	STORM DRAIN PIPE BY PAINT MARK		DECIDUOUS TREE
DYS	PAINTED DOUBLE YELLOW TRAFFIC STRIPE	SDI	STORM DRAIN INLET		
E/PM	ELECTRIC LINE BY PAINT MARK	SDP	SERVICE DROP POLE		
EA	EDGE OF ASPHALT	SGP	STEEL GUARD POST		SMALL DECIDUOUS TREE
EPB	ELECTRIC PULLBOX	SP	STEEL POST		
FH	FIRE HYDRANT	SSG	SLIDING STEEL GATE		
FL	FLOWLINE	STW	STUCCO WALL		GROUP OF SMALL TREES
FO/PM	FIBER OPTIC LINE BY PAINT MARK	STW/WI	STUCCO WALL WITH WROUGHT IRON FENCE		
FRD	UTILITY FROM COA DISTRIBUTION MAPS	SWS	PAINTED SOLID WHITE TRAFFIC STRIPE		SHRUB
G/PM	GAS LINE BY PAINT MARK	TA	TOP OF ASPHALT		
GA	GATE	TC	TOP OF CURB		TREE STUMP
GRV	LANDSCAPING GRAVEL	TCO	TOP OF CONCRETE		
GVB	GAS VALVE BOX	TG	TOP OF GRATE		
GW	GUY WIRE ANCHOR	TRN	ELECTRIC TRANSFORMER		
HDPE	HIGH DENSITY POLYETHYLENE PIPE	TS	TRAFFIC SIGN		
		TV/PM	CABLE TELEVISION LINE BY PAINT MARK		
		TVCAB	CABLE TELEVISION CABINET		
		TVR	CABLE TELEVISION RISER		
		TYP	TYPICAL		

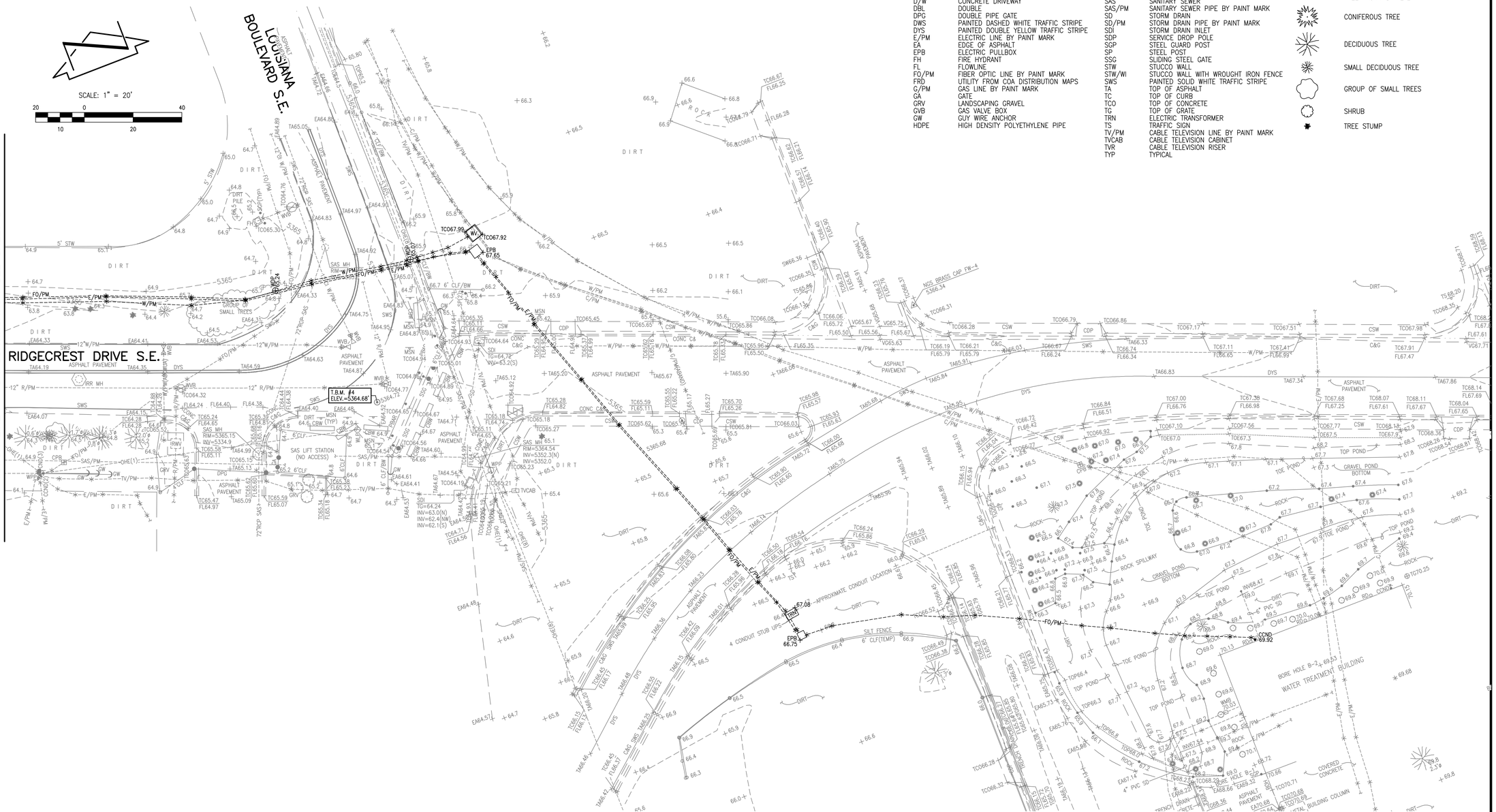

HIGH MESA Consulting Group
6010-B MIDWAY PARK BLVD. NE • ALBUQUERQUE, NEW MEXICO 87109
PHONE: 505.345.4250 • FAX: 505.345.4254 • www.highmesacg.com

UNCLASSIFIED SURVEY - UTILITY AS-CONSTRUCTED

EA ENGINEERING - KAFB BFF - RIDGECREST DRIVE GEP CORRIDOR

SURVEYED BY M.V.Z.
DRAWN BY T.N.T.
APPROVED BY J.M.S.

NO.	DATE	BY	REVISIONS

JOB NO. 2016.030.7
DATE 01-2018
SHEET 6 OF 6

File Path:P:\MKA\2016\2016030\7\SIR\ | Plot Date: 01-26-2018
File Name:160307_UTIL6.DWG | Plot Time: 10:18 am

TEMPORARY BENCHMARK #4 (T.B.M.)

A MAG NAIL W/WASHER SET IN ASPHALT NEAR THE SOUTHEAST QUADRANT OF THE INTERSECTION OF RIDGECREST DRIVE S.E. AND LOUISIANA BOULEVARD S.E., AS SHOWN ON THIS SHEET.
ELEVATION = 5364.68 FEET (NAVD 1988)

LEGEND

ABAND	POSSIBLE ABANDONED LINE	ICT	IRRIGATION CONTROL TIMER	VCP	VITRIFIED CLAY PIE
ABCWUA	ABCWUA LINE-SPOT LOCATION	INV	PIPE INVERT	VG	CONCRETE VALLEY GUTTER
ASPH	ASPHALT	IRR MH	IRRIGATION MANHOLE IN CONCRETE	W/PM	WATER LINE BY PAINT MARK
BW	BLOCK WALL	IVB	IRRIGATION VALVE BOX	WCR	CONCRETE WHEELCHAIR RAMP
C&G	CURB AND GUTTER	MB	MAILBOX	WDF	WOOD FENCE
C/PM	COMMUNICATION LINE BY PAINT MARK	MB/B	MAILBOX ON BRICKS	WDP	PERMANENT WATER LINE MARKER
CBW	CONCRETE BARRIER WALL	MH	MANHOLE	WGA	WOOD GATE
COND	COMMUNICATION CONDUIT	MLP	METAL LIGHT POLE	WIG	WROUGHT IRON GATE
CDP	CONCRETE DRIVE PAD	MSN	METAL SIGN (GENERAL)	WL	WATER LINE (NOT SPOTTED)
CF	LANDSCAPING CRUSHER FINES	MTC	METAL TRASH CAN	WLP	WOOD LIGHT POLE
CHC	CONCRETE HEADER CURB	OHC(2)	OVERHEAD COMMUNICATION (# OF LINES)	WMB	WATER METER BOX
CI	CAST IRON PIPE	OHE(2)	OVERHEAD ELECTRIC (# OF LINES)	WP	WOOD POST
CLF	CHAIN LINK FENCE	PBAR	PIPE BARRIER	WPP	WOOD POWER POLE
CLF/BW	CHAIN LINK FENCE WITH BARBED WIRE	PIV	POST INDICATOR VALVE	WRF	4-STRAND SMOOTH WIRE FENCE
CMR	COMMUNICATION RISER	PS	PAINTED PARKING STRIPE	WV	WATER VAULT
CMU	CONCRETE MASONRY UNIT WALL	PVC	POLYVINYL CHLORIDE PIPE	WVB	WATER VALVE BOX
CND	ELECTRIC CONDUIT	R/PM	REUSE WATER LINE BY PAINT MARK		
CONC	CONCRETE	RCP	REINFORCED CONCRETE PIPE	*	PAINTED UTILITY MARK
CP	CONCRETE PIPE	RR	LANDSCAPING RIVER ROCK (DRAINAGE)	*	PAINTED ABCWUA UTILITY MARK
CPB	COMMUNICATION PULLBOX	RRT	LANDSCAPING RAILROAD TIES	ø	TREE TRUNK DIAMETER
CSW	CONCRETE SIDEWALK	RWV	REUSE WATER VAULT		CONIFEROUS TREE
D/W	CONCRETE DRIVEWAY	SAS	SANITARY SEWER		
DBL	DOUBLE	SAS/PM	SANITARY SEWER PIPE BY PAINT MARK		DECIDUOUS TREE
DPG	DOUBLE PIPE GATE	SD	STORM DRAIN		
DWS	PAINTED DASHED WHITE TRAFFIC STRIPE	SD/PM	STORM DRAIN PIPE BY PAINT MARK		SMALL DECIDUOUS TREE
DYS	PAINTED DOUBLE YELLOW TRAFFIC STRIPE	SDI	STORM DRAIN INLET		
E/PM	ELECTRIC LINE BY PAINT MARK	SDP	SERVICE DROP POLE		GROUP OF SMALL TREES
EA	EDGE OF ASPHALT	SGP	STEEL GUARD POST		
EPB	ELECTRIC PULLBOX	SP	STEEL POST		SHRUB
FH	FIRE HYDRANT	SSG	SLIDING STEEL GATE		
FL	FLOWLINE	STW	STUCCO WALL		TREE STUMP
FO/PM	FIBER OPTIC LINE BY PAINT MARK	STW/WI	STUCCO WALL WITH WROUGHT IRON FENCE		
FRD	UTILITY FROM COA DISTRIBUTION MAPS	SWS	PAINTED SOLID WHITE TRAFFIC STRIPE		
G/PM	GAS LINE BY PAINT MARK	TA	TOP OF ASPHALT		
GA	GATE	TC	TOP OF CURB		
GRV	LANDSCAPING GRAVEL	TCO	TOP OF CONCRETE		
GVB	GAS VALVE BOX	TG	TOP OF GRATE		
GW	GUY WIRE ANCHOR	TRN	ELECTRIC TRANSFORMER		
HDPE	HIGH DENSITY POLYETHYLENE PIPE	TS	TRAFFIC SIGN		
		TV/PM	CABLE TELEVISION LINE BY PAINT MARK		
		TVCAB	CABLE TELEVISION CABINET		
		TVR	CABLE TELEVISION RISER		
		TYP	TYPICAL		

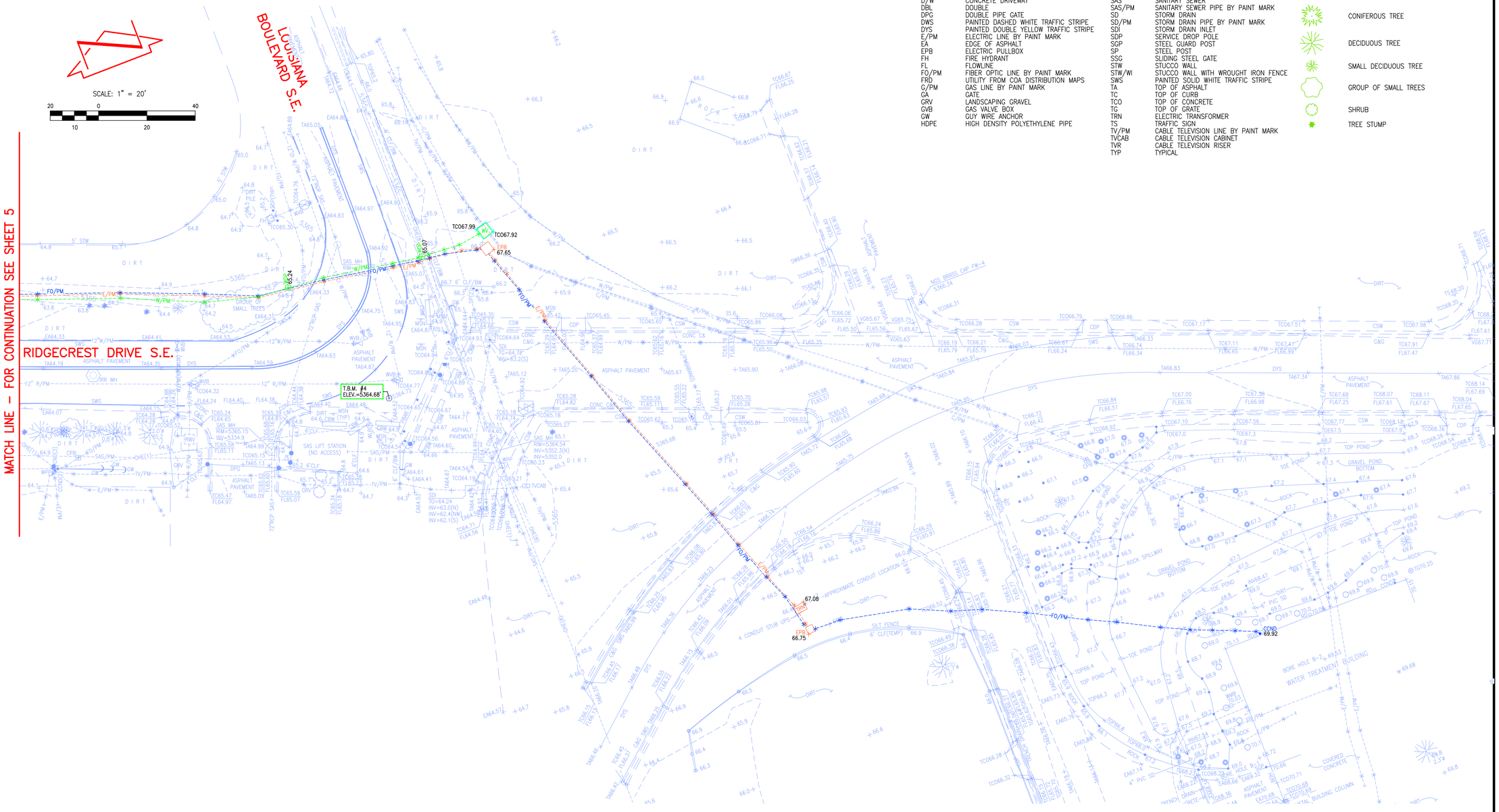

HIGH MESA Consulting Group
6010-B MIDWAY PARK BLVD. NE • ALBUQUERQUE, NEW MEXICO 87109
PHONE: 505.345.4250 • FAX: 505.345.4254 • www.highmesacg.com

UNCLASSIFIED SURVEY - UTILITY AS-CONSTRUCTED

EA ENGINEERING - KAFB BFF - RIDGECREST DRIVE GEP CORRIDOR

SURVEYED BY M.V.Z.
DRAWN BY T.N.T.
APPROVED BY J.M.S.

NO.	DATE	BY	REVISIONS

JOB NO. 2016.030.7
DATE 01-2018
SHEET 6 OF 6

File Path: P:\DATA\2016\2016.030.7\SURV\ | Plot Date: 01-26-2018
File Name: 160307_UTIL6.DWG | Plot Time: 10:18 am

APPENDIX D

Warranties

(Provided on compact disc)

RMCI INC
GENERAL CONTRACTOR
N.M. LICENSE No. 31964

P.O. Box 91447
Albuquerque, NM 87199
(505) 345-0008
(505) 345-0111 FAX

February 1, 2018

EA Engineering, Science, and Technology, Inc., PBC
320 Gold Ave. SW, Suite 1300
Albuquerque, NM 87102

Attn: Devon E. Jercinovic

RE: GROUNDWATER CONVEYANCE INFRASTRUCTURE INSTALLATION,
KAFB - 106239 KIRTLAND AIR FORCE BASE
ALBUQUERQUE, NM
WARRANTY

Dear Ms. Jercinovic:

RMCI, Inc. hereby warrants to the purchaser that the installation and materials by RMCI, Inc. shall be free from defects in workmanship and shall withstand the effects of normal weather conditions and normal wear and tear for a period on one (1) year from February 1, 2018, the Date of Acceptance. Weather, which shall not be considered normal, for purposes of this Limited Warranty, shall be that which is customarily considered to be in the nature of and act of God, including, but not limited to, earthquake, flood, piercing hail, ice damage, hurricane, tornado, or fire.

This Limited Warranty is expressly conditioned upon normal use and service of the material installed by RMCI, Inc. for purpose and in the manner for which said materials are designed and manufactured. Normal use and service shall exclude, by way of example and not limitation, exposure of the materials to harmful chemicals or solid falling objects; abuse by machinery, equipment, people, animals; and excessive pressure or stresses of any cause or nature on materials during and/or after installation. Devastation from any aforesaid conditions shall void this Limited Warranty.

LIABILITY LIMITATION: RMCI, Inc., its agents, officers, directors, shareholders, successors, or assigns shall not be liable in contract or in tort (including negligence) for loss of profits or revenue, loss of use of equipment or facilities, cost of capital, or for any special, indirect, incidental or consequential damages of any nature resulting from or in any manner relating to the materials covered hereby, its design, use, inability to use the same or any delay in delivery of the same, it being understood and agreed that the sole and exclusive remedy with respect to defective workmanship shall be the repair or the correction thereof pursuant to the foregoing provisions.

This Limited Warranty is given in lieu of all other warranties, expressed or implied, oral or written and is issued by RMCI, Inc., 6211 Chappell Rd. NE, Albuquerque, NM 87113, on this 1st day of February 2018. The warranty extends solely to the Owner/Purchaser and is non-transferable and non-assignable.

Please don't hesitate to call if you have any questions, need additional information, or would like to discuss this matter further.

Sincerely,

Phillip Johnson
Project Manager

PJ:sf

cc: File No. 1611.04a
1611.04a\Letter of Warranty

GUARANTEE
OF
ELECTRICAL MATERIALS AND WORKMANSHIP

As part of the consideration for the electrical contract identified below, the undersigned **WILSON ELECTRIC** hereby guarantees to the OWNER of the premises, for a period of one (1) year limited from date, that the electrical work performed under said contract was performed in a workmanlike manner and that the electrical material purchased and installed by the undersigned thereunder was, when installed, free of inherent manufacturing or mechanical defects, all to the extent and on the conditions herein specifically set forth, that is:

1) The undersigned Qualified Electrical Contractor shall replace, without cost or charge to the OWNER for either labor or materials, such individual parts of the electrical material or apparatus installed under said contract as may become defective or unserviceable within the period of the guarantee by reason of any failure of the undersigned in performing the work in a workmanlike manner or by reason of inherent manufacturing or mechanical defect in any electrical material or apparatus purchased and installed by the undersigned; provided:
   (a) The OWNER notifies the Contractor, in writing, of any failure or default within ten (10) days of the date such failure or default becomes apparent;
   (b) There shall be no responsibility on the Contractor to replace light bulbs, globes, stolen or vandalized materials or workmanship;
   (c) NO person, firm, or corporation other than the undersigned Qualified Electrical Contractor has, during or since the completion of the work performed or attempted to perform any of the work included in said contract or repaired or attempted to repair any of the electrical work performed by the undersigned thereunder;
   (d) The defect or failure was not caused or affected by the improper use or operation of the electrical facilities installed under said contract.
2) The undersigned Qualified Electrical Contractor's liability shall be fixed by the terms hereof and this express guarantee excludes and supersedes all implied guarantees or warranties.
3) This guarantee shall pass with the title of the premises to the new owner or owners thereof.

IN WITNESS WHEREOF, this guarantee has been executed this, **2nd day of February, 2018**

CONTRACT WITH: EA Enginnering
CONTRACT DATE: June 19, 2017
PROJECT: 62599DM01 KAFB BFF Expansion of EDB P

Matthew Walstrom

WILSON ELECTRIC
501 General Somervell St. SE Suite B
Albuquerque, NM 87123
Phone: 505-271-8773
Fax: 505-271-0246